09/600390

ISSUE CLASSIFICATION	
Class	340
Subclass	576

FILED UNDER 35 U.S.C. 371

PATENT NUMBER

6717518

6717518

U.S. UTILITY Patent Application

O.I.P.E.	PATENT DATE
SCANNED NS (2) Q.A. Am	APR 06 2004

APPLICATION NO.	CONT/PRIOR	CLASS	SUBCLASS	ART UNIT	EXAMINER
09/600390	D F	340	576	2632	Mullen

APPLICANTS: Patrick Pirim
Thomas Binford

TITLE: Method and apparatus for detection of drowsiness

PTO-2040
12/99

ISSUING CLASSIFICATION

ORIGINAL		CROSS REFERENCE(S)	
CLASS	SUBCLASS	CLASS	SUBCLASS (ONE SUBCLASS PER BLOCK)
340	576	348	143
INTERNATIONAL CLASSIFICATION		382	117
G08B 23/00			

☐ Continued on Issue Slip Inside File Jacket

☐ TERMINAL DISCLAIMER	DRAWINGS			CLAIMS ALLOWED	
	Sheets Drwg.	Figs. Drwg.	Print Fig.	Total Claims	Print Claim for O.G.
	20	37	27	39	1

☐ The term of this patent subsequent to _____ (date) has been disclaimed.

☐ The term of this patent shall not extend beyond the expiration date of U.S Patent. No. _____

☐ The terminal ____months of this patent have been disclaimed.

_____ (Assistant Examiner) _____ (Date)

Thomas J Mullen Jr.
THOMAS MULLEN
PRIMARY EXAMINER
AU 2632 (Primary Examiner) 11/24/03 (Date)

(Legal Instruments Examiner) 11/26/03 (Date)

NOTICE OF ALLOWANCE MAILED: 11.25.3

ISSUE FEE (W)

Amount Due	Date Paid
1,330	2-17-04

ISSUE BATCH NUMBER

WARNING:
The information disclosed herein may be restricted. Unauthorized disclosure may be prohibited by the United States Code Title 35, Sections 122, 181 and 368. Possession outside the U.S. Patent & Trademark Office is restricted to authorized employees and contractors only.

Form PTO-436A
(Rev. 6/99)

FILED WITH: ☐ DISK (CRF) ☐ FICHE ☐ CD-ROM
(Attached in pocket on right inside flap)

ISSUE FEE IN FILE

SAMSUNG EXHIBIT 1004
Samsung v. Image Processing Techs.

09/600390

PATENT APPLICATION

09600390

EP99/00300

INITIALS _____

Vonda M. Wallace
Paralegal Specialist

CONTENTS

	Date Received (Incl. C. of M.) or Date Mailed		Date Received (Incl. C. of M.) or Date Mailed
1. Application 20 prints papers.		42.	
2. 905	09 AUG 2000	43.	
3. IDS	29 SEPT 00	44.	
4. Dec + EOT	09 FEB 01	45.	
5. 903	22 FEB 2001	46.	
6. IDS	2-9-01	47.	
7. Priority document	2-9-01	48.	
10/14 8. Ref. 3 months	10-8-02	49.	
9. E.O.T. (1 month)	2-10-03	50.	
10. Amdt. A	2-10-03 cofm 2-15-03	51.	
3/31 11. Letter (1 month)	3/31/03	52.	
12. Amdt. B	4-15-03	53.	
11/25 13. Notice of allowability	11.25.03	54.	
14. Formal Drawings (20 shts) set 1	2/17/04	55.	
15.		56.	
16.		57.	
17.		58.	
18.		59.	
19.		60.	
20.		61.	
21.		62.	
22.		63.	
23.		64.	
24.		65.	
25.		66.	
26.		67.	
27.		68.	
28.		69.	
29.		70.	
30.		71.	
31.		72.	
32.		73.	
33.		74.	
34.		75.	
35.		76.	
36.		77.	
37.		78.	
38.		79.	
39.		80.	
40.		81.	
41.		82.	

(LEFT OUTSIDE)

SEARCHED

Class	Sub.	Date	Exmr.
340	575	10/2/02	TM
	576		
382	100		
	103		
	115		
	117		
348	143		
	148		
	672		
	update	11/24/03	TM

INTERFERENCE SEARCHED

Class	Sub.	Date	Exmr.
340	576	11/24/03	TM
382	117		
348	143		

SEARCH NOTES
(INCLUDING SEARCH STRATEGY)

	Date	Exmr.
EAST	10/2/02	TM

(RIGHT OUTSIDE)

Vonda M. Wallace
Paralegal Specialist

ISSUE SLIP STAPLE AREA (for additional cross references)

8/4/00

POSITION	INITIALS	ID NO.	DATE
FEE DETERMINATION			
O.I.P.E. CLASSIFIER		6	7-27-00
FORMALITY REVIEW			
RESPONSE FORMALITY REVIEW			

INDEX OF CLAIMS

✔ ..... Rejected
= ..... Allowed
— (Through numeral)... Canceled
÷ ..... Restricted
N ..... Non-elected
I ..... Interference
A ..... Appeal
O ..... Objected

Claim Final	Claim Original	Date 10/02	Date 11/24/03
1	1	✔	=
2	2	|	|
3	3	|	|
4	4	|	|
5	5	|	|
6	6	✔	|
10	7	0	|
11	8	0	|
12	9	0	|
13	10	✔	|
8	11	✔	|
7	12	✔	|
9	13	✔	|
14	14	=	|
15	15	|	|
16	16	|	|
17	17	|	|
18	18	|	|
19	19	|	|
23	20	|	|
24	21	|	|
25	22	=	|
26	23	✔	|
21	24	=	|
20	25	|	|
22	26	|	|
27	27	|	|
28	28	|	|
29	29	|	|
30	30	|	|
31	31	|	|
32	32	|	|
33	33	|	|
34	34	|	|
35	35	|	|
36	36	|	|
37	37	|	|
38	38	=	|
39	39	✔	=
	40		
	41		
	42		
	43		
	44		
	45		
	46		
	47		
	48		
	49		
	50		

Claim Final	Claim Original	Date
	51	
	52	
	53	
	54	
	55	
	56	
	57	
	58	
	59	
	60	
	61	
	62	
	63	
	64	
	65	
	66	
	67	
	68	
	69	
	70	
	71	
	72	
	73	
	74	
	75	
	76	
	77	
	78	
	79	
	80	
	81	
	82	
	83	
	84	
	85	
	86	
	87	
	88	
	89	
	90	
	91	
	92	
	93	
	94	
	95	
	96	
	97	
	98	
	99	
	100	

Claim Final	Claim Original	Date
	101	
	102	
	103	
	104	
	105	
	106	
	107	
	108	
	109	
	110	
	111	
	112	
	113	
	114	
	115	
	116	
	117	
	118	
	119	
	120	
	121	
	122	
	123	
	124	
	125	
	126	
	127	
	128	
	129	
	130	
	131	
	132	
	133	
	134	
	135	
	136	
	137	
	138	
	139	
	140	
	141	
	142	
	143	
	144	
	145	
	146	
	147	
	148	
	149	
	150	

If more than 150 claims or 10 actions staple additional sheet here

(LEFT INSIDE)

UNITED STATES PATENT AND TRADEMARK OFFICE

COMMISSIONER FOR PATENTS
UNITED STATES PATENT AND TRADEMARK OFFICE
WASHINGTON, D.C. 20231
www.uspto.gov

Bib Data Sheet

SERIAL NUMBER	FILING DATE	CLASS	GROUP ART UNIT	ATTORNEY DOCKET NO.
09/600,390	02/09/2001 RULE _	340	2632	20046H-00060

APPLICANTS

Patrick Pirim, Paris, FRANCE;
Thomas Binford, Cupertino, CA ;

** CONTINUING DATA **********

THIS APPLICATION IS A 371 OF PCT/EP99/00300 01/15/1999

** FOREIGN APPLICATIONS **********

FRANCE 98/00378 01/15/1998
PCT/EP98/05383 08/25/1998

IF REQUIRED, FOREIGN FILING LICENSE GRANTED ** 02/23/2001

Foreign Priority claimed	STATE OR COUNTRY	SHEETS DRAWING	TOTAL CLAIMS	INDEPENDENT CLAIMS
☑ yes ☐ no	FRANCE	20	39	6

35 USC 119 (a-d) conditions met: ☑ yes ☐ no ☐ Met after Allowance

Verified and Acknowledged: Examiner's Signature _____ Initials

ADDRESS

Babak S Sani
Townsend and Townsend and Crew
Two Embarcadero Center 8th Floor
San Francisco ,CA 94111

TITLE

Method and apparatus for detection of drowsiness

FILING FEE RECEIVED	FEES: Authority has been given in Paper	
1546	No. _____ to charge/credit DEPOSIT ACCOUNT No. _____ for following:	☐ All Fees ☐ 1.16 Fees (Filing) ☐ 1.17 Fees (Processing Ext. of time) ☐ 1.18 Fees (Issue) ☐ Other _____ ☐ Credit

09/600390

patent application serial no.

Department of Commerce
Patent and Trademark Office
fee record

07/20/2000 AGIZAW 00000075 201430 09600390

01 FC:970 840.00 CH
02 FC:966 348.00 CH
03 FC:964 234.00 CH

15-01-2000

EP 009900300

09/600390

PCT/EP-99/00300
048 J PCT 361
January 11, 2000

534 Rec'd PCT/PTO 14 JUL 2000

METHOD AND APPARATUS FOR DETECTION OF DROWSINESS

Inventors: Dr. Patrick Pirim

Dr. Thomas Binford

BACKGROUND OF THE INVENTION

1. Field of the Invention.

The present invention relates generally to an image processing system, and more particularly to the use of a generic image processing system to detect drowsiness.

1. Description of the Related Art.

It is well known that a significant number of highway accidents result from drivers becoming drowsy or falling asleep, which results in many deaths and injuries. Drowsiness is also a problem in other fields, such as for airline pilots and power plant operators, in which great damage may result from failure to stay alert.

A number of different physical criteria may be used to establish when a person is drowsy, including a change in the duration and interval of eye blinking. Normally, the duration of blinking is about 100 to 200 ms when awake and about 500 to 800 ms when drowsy. The time interval between successive blinks is generally constant while awake, but varies within a relatively broad range when drowsy.

sub. a1

Numerous devices have been proposed to detect drowsiness of drivers. Such devices are shown, for example, in U.S. Patent Nos. 5,841,354; 5,813,99; 5,689,241; 5,684,461; 5,682,144; 5,469,143; 5,402,109; 5,353,013; 5,195,606; 4,928,090; 4,555,697; 4,485,375; and 4,259,665. In general, these devices fall into three categories: i) devices that detect movement of the head of the driver, e.g., tilting; ii) devices that detect a physiological change in the driver, e.g., altered heartbeat or breathing, and iii) devices that detect a physical result of the driver falling asleep, e.g., a reduced grip on the steering wheel. None of these devices is believed to have met with commercial success.

SAMSUNG EXHIBIT 1004
Page 7 of 404

1-A

Sub. a2

The German patent application DE-19715515 and the corresponding French patent application FR-2.747.346 disclose an apparatus and a process of evaluation of drowsiness level of a driver using a video camera placed near the feet of the driver and a processing unit for the camera image with a software detecting the blinks of the eyes determining the time gap between the beginning and the end of the blink. More particularly, a unit 10 of the processor realizes :

- a memorization of the video image and its treatment, so as to determine an area comprising the driver's eyes,
- the detection of the time gap between the closing of the driver eyelids and their full opening and
- a treatment in a memory 11 and a processor 22 in combination with unit 10 to calculate a ratio of slow blink apparition.

The object of the international patent application published WO-97/01246 is a security system comprising a video camera placed within the rear-view mirror of a car and a video screen remotely disposed for the analysis of what is happening in the car and around it, as well as of what happened due to the recording of the output video signal of the camera. This is in fact a concealed camera (within the rear-view mirror), so that it is imperceptible to vandals and thieves and which observes a large scope including the inside of the car and its surroundings, the record allowing one to know later what has happened in this scope (page 6, lines 13 to 19), this is not a detector whose effective angle is strictly limited to the car driver face in order to detect its eventual drowsiness and to make him awake.

Sub. a3 B1

Commonly-owned PCT Application Serial Nos. PCT/FR97/01354 and PCT/EP98/05383 disclose a generic image processing system that operates to localize

SAMSUNG EXHIBIT 1004
Page 8 of 404

PTO/PCT Rec'd 14 JUL 2000

METHOD AND APPARATUS FOR DETECTION OF DROWSINESS

BACKGROUND OF THE INVENTION

1. Field of the Invention.

The present invention relates generally to an image processing system, and more particularly to the use of a generic image processing system to detect drowsiness.

1. Description of the Related Art.

It is well known that a significant number of highway accidents result from drivers becoming drowsy or falling asleep, which results in many deaths and injuries. Drowsiness is also a problem in other fields, such as for airline pilots and power plant operators, in which great damage may result from failure to stay alert.

A number of different physical criteria may be used to establish when a person is drowsy, including a change in the duration and interval of eye blinking. Normally, the duration of blinking is about 100 to 200 ms when awake and about 500 to 800 ms when drowsy. The time interval between successive blinks is generally constant while awake, but varies within a relatively broad range when drowsy.

Numerous devices have been proposed to detect drowsiness of drivers. Such devices are shown, for example, in U.S. Patent Nos. 5,841,354; 5,813,99; 5,689,241;5,684,461; 5,682,144; 5,469,143; 5,402,109; 5,353,013; 5,195,606; 4,928,090; 4,555,697; 4,485,375; and 4,259,665. In general, these devices fall into three categories: i) devices that detect movement of the head of the driver, e.g., tilting; ii) devices that detect a physiological change in the driver, e.g., altered heartbeat or breathing, and iii) devices that detect a physical result of the driver falling asleep, e.g., a reduced grip on the steering wheel. None of these devices is believed to have met with commercial success.

Commonly-owned PCT Application Serial Nos. PCT/FR97/01354 and PCT/EP98/05383 disclose a generic image processing system that operates to localize

REPLACE by AH 34

SAMSUNG EXHIBIT 1004
Page 9 of 404

objects in relative movement in an image and to determine the speed and direction of the objects in real-time. Each pixel of an image is smoothed using its own time constant. A binary value corresponding to the existence of a significant variation in the amplitude of the smoothed pixel from the prior frame, and the amplitude of the variation, are determined, and the time constant for the pixel is updated. For each particular pixel, two matrices are formed that include a subset of the pixels spatially related to the particular pixel. The first matrix contains the binary values of the subset of pixels. The second matrix contains the amplitude of the variation of the subset of pixels. In the first matrix, it is determined whether the pixels along an oriented direction relative to the particular pixel have binary values representative of significant variation, and, for such pixels, it is determined in the second matrix whether the amplitude of these pixels varies in a known manner indicating movement in the oriented direction. In domains that include luminance, hue, saturation, speed, oriented direction, time constant, and x and y position, a histogram is formed of the values in the first and second matrices falling in user selected combinations of such domains. Using the histograms, it is determined whether there is an area having the characteristics of the selected combinations of domains.

It would be desirable to apply such a generic image processing system to detect the drowsiness of a person.

SUMMARY OF THE INVENTION

The present invention is a process of detecting a driver falling asleep in which an image of the face of the driver is acquired. Pixels of the image having characteristics corresponding to characteristics of at least one eye of the driver are selected and a histogram is formed of the selected pixels. The histogram is analyzed over time to identify each opening and closing of the eye, and from the eye opening and closing information, characteristics indicative of a driver falling asleep are determined.

In one embodiment, a sub-area of the image comprising the eye is determined prior to the step of selecting pixels of the image having characteristics corresponding to characteristics of an eye. In this embodiment, the step of selecting pixels of the image having characteristics of an eye involves selecting pixels within the sub-area of the image. The step of identifying a sub-area of the image preferably involves identifying the head of

SAMSUNG EXHIBIT 1004
Page 10 of 404

the driver, or a facial characteristic of the driver, such as the driver's nostrils, and then identifying the sub-area of the image using an anthropomorphic model. The head of the driver may be identified by selecting pixels of the image having characteristics corresponding to edges of the head of the driver. Histograms of the selected pixels of the edges of the driver's head are projected onto orthogonal axes. These histograms are then analyzed to identify the edges of the driver's head.

The facial characteristic of the driver may be identified by selecting pixels of the image having characteristics corresponding to the facial characteristic. Histograms of the selected pixels of the facial characteristic are projected onto orthogonal axes. These histograms are then analyzed to identify the facial characteristic. If desired, the step of identifying the facial characteristic in the image involves searching sub-images of the image until the facial characteristic is found. In the case in which the facial characteristic is the nostrils of the driver, a histogram is formed of pixels having low luminance levels to detect the nostrils. To confirm detection of the nostrils, the histograms of the nostril pixels may be analyzed to determine whether the spacing between the nostrils is within a desired range and whether the dimensions of the nostrils fall within a desired range. In order to confirm the identification of the facial characteristic, an anthropomorphic model and the location of the facial characteristic are used to select a sub-area of the image containing a second facial characteristic. Pixels of the image having characteristics corresponding to the second facial characteristic are selected and a histograms of the selected pixels of the second facial characteristic are analyzed to confirm the identification of the first facial characteristic.

In order to determine openings and closings of the eyes of the driver, the step of selecting pixels of the image having characteristics corresponding to characteristics of an eye of the driver involves selecting pixels having low luminance levels corresponding to shadowing of the eye. In this embodiment, the step analyzing the histogram over time to identify each opening and closing of the eye involves analyzing the shape of the eye shadowing to determine openings and closings of the eye. The histograms of shadowed pixels are preferably projected onto orthogonal axes, and the step of analyzing the shape of the eye shadowing involves analyzing the width and height of the shadowing.

SAMSUNG EXHIBIT 1004
Page 11 of 404

sub. a16

An alternative method of determining openings and closings of the eyes of the driver involves selecting pixels of the image having characteristics of movement corresponding to blinking. In this embodiment, the step analyzing the histogram over time to identify each opening and closing of the eye involves analyzing the number of pixels in movement corresponding to blinking over time. The characteristics of a blinking eye are preferably selected from the group consisting of i) DP=1, ii) CO indicative of a blinking eyelid, iii) velocity indicative of a blinking eyelid, and iv) up and down movement indicative of a blinking eyelid.

sub. a7

An apparatus for detecting a driver falling asleep includes a sensor for acquiring an image of the face of the driver, a controller, and a histogram formation unit for forming a histogram on pixels having selected characteristics. The controller controls the histogram formation unit to select pixels of the image having characteristics corresponding to characteristics of at least one eye of the driver and to form a histogram of the selected pixels. The controller analyzes the histogram over time to identify each opening and closing of the eye, and determines from the opening and closing information on the eye, characteristics indicative of the driver falling asleep.

In one embodiment, the controller interacts with the histogram formation unit to identify a sub-area of the image comprising the eye, and the controller controls the histogram formation unit to select pixels of the image having characteristics corresponding to characteristics of the eye only within the sub-area of the image. In order to select the sub-area of the image, the controller interacts with the histogram formation unit to identify the head of the driver in the image, or a facial characteristic of the driver, such as the driver's nostrils. The controller then identifies the sub-area of the image using an anthropomorphic model. To identify the head of the driver, the histogram formation unit selects pixels of the image having characteristics corresponding to edges of the head of the driver and forms histograms of the selected pixels projected onto orthogonal axes. To identify a facial characteristic of the driver, the histogram formation unit selects pixels of the image having characteristics corresponding to the facial characteristic and forms histograms of the selected pixels projected onto orthogonal axes. The controller then analyzes the histograms of the selected pixels to

SAMSUNG EXHIBIT 1004
Page 12 of 404

identify the edges of the head of the driver or the facial characteristic, as the case may be. If the facial characteristic is the nostrils of the driver, the histogram formation unit selects pixels of the image having low luminance levels corresponding to the luminance level of the nostrils. The controller may also analyze the histograms of the nostril pixels to determine whether the spacing between the nostrils is within a desired range and whether dimensions of the nostrils fall within a desired range. If desired, the controller may interact with the histogram formation unit to search sub-images of the image to identify the facial characteristic.

In order to verify identification of the facial characteristic, the controller uses an anthropomorphic model and the location of the facial characteristic to cause the histogram formation unit to select a sub-area of the image containing a second facial characteristic. The histogram formation unit selects pixels of the image in the sub-area having characteristics corresponding to the second facial characteristic and forms a histogram of such pixels. The controller then analyzes the histogram of the selected pixels corresponding to the second facial characteristic to identify the second facial characteristic and to thereby confirm the identification of the first facial characteristic.

In one embodiment, the histogram formation unit selects pixels of the image having low luminance levels corresponding to shadowing of the eyes, and the controller then analyzes the shape of the eye shadowing to identify shapes corresponding to openings and closings of the eye. The histogram formation unit preferably forms histograms of the shadowed pixels of the eye projected onto orthogonal axes, and the controller analyzes the width and height of the shadowing to determine openings and closings of the eye.

In an alternative embodiment, the histogram formation unit selects pixels of the image in movement corresponding to blinking and the controller analyzes the number of pixels in movement over time to determine openings and closings of the eye. The characteristics of movement corresponding to blinking are preferably selected from the group consisting of i) DP=1, ii) CO indicative of a blinking eyelid, iii) velocity indicative of a blinking eyelid, and iv) up and down movement indicative of a blinking eyelid.

SAMSUNG EXHIBIT 1004
Page 13 of 404

If desired, the sensor may be integrally constructed with the controller and the histogram formation unit. The apparatus may comprise an alarm, which the controller operates upon detection of the driver falling asleep, and may comprise an illumination source, such as a source of IR radiation, with the sensor being adapted to view the driver when illuminated by the illumination source.

A rear-view mirror assembly comprises a rear-view mirror and the described apparatus for detecting driver drowsiness mounted to the rear-view mirror. In one embodiment, a bracket attaches the apparatus to the rear-view mirror. In an alternative embodiment, the rear-view mirror comprises a housing having an open side and an interior. The rear-view mirror is mounted to the open side of the housing, and is see-through from the interior of the housing to the exterior of the housing. The drowsiness detection apparatus is mounted interior to the housing with the sensor directed toward the rear-view mirror. If desired, a joint attaches the apparatus to the rear-view mirror assembly, with the joint being adapted to maintain the apparatus in a position facing the driver during adjustment of the mirror assembly by the driver. The rear-view mirror assembly may include a source of illumination directed toward the driver, with the sensor adapted to view the driver when illuminated by the source of illumination. The rear-view mirror assembly may also include an alarm, with the controller operating the alarm upon detection of the driver falling asleep. Also disclosed is a vehicle comprising the drowsiness detection device.

SUBSTITUTE SHEET (RULE 26)

BRIEF DESCRIPTION OF THE DRAWINGS

Fig. 1 is a diagrammatic illustration of the system according to the invention.

Fig. 2 is a block diagram of the temporal and spatial processing units of the invention.

Fig. 3 is a block diagram of the temporal processing unit of the invention.

Fig. 4 is a block diagram of the spatial processing unit of the invention.

Fig. 5 is a diagram showing the processing of pixels in accordance with the invention.

Fig. 6 illustrates the numerical values of the Freeman code used to determine movement direction in accordance with the invention.

SAMSUNG EXHIBIT 1004
Page 14 of 404

Fig. 7 illustrates nested matrices as processed by the temporal processing unit.

Fig. 8 illustrates hexagonal matrices as processed by the temporal processing unit.

Fig. 9 illustrates reverse-L matrices as processed by the temporal processing unit.

Fig. 10 illustrates angular sector shaped matrices as processed by the temporal processing unit.

Fig. 11 is a block diagram showing the relationship between the temporal and spatial processing units, and the histogram formation units.

Fig. 12 is a block diagram showing the interrelationship between the various histogram formation units.

Fig. 13 shows the formation of a two-dimensional histogram of a moving area from two one-dimensional histograms.

Fig. 14 is a block diagram of an individual histogram formation unit.

Figs. 15A and 15B illustrate the use of a histogram formation unit to find the orientation of a line relative to an analysis axis.

Fig. 16 illustrates a one-dimensional histogram.

Fig. 17 illustrates the use of semi-graphic sub-matrices to selected desired areas of an image.

Fig. 18 is a side view illustrating a rear view mirror in combination with the drowsiness detection system of the invention.

Fig. 19 is a top view illustrating operation of a rear view mirror.

Fig. 20 is a schematic illustrating operation of a rear view mirror.

Fig. 21 is a cross-sectional top view illustrating a rear view mirror assembly incorporating the drowsiness detection system of the invention.

Fig. 22 is a partial cross-sectional top view illustrating a joint supporting the drowsiness detection system of the invention in the mirror assembly of Fig. 21.

Fig. 23 is a top view illustrating the relationship between the rear view mirror assembly of Fig. 21 and a driver.

Fig. 24 illustrates detection of the edges of the head of a person using the system of the invention.

SAMSUNG EXHIBIT 1004
Page 15 of 404

Fig. 25 illustrates masking outside of the edges of the head of a person.

Fig. 26 illustrates masking outside of the eyes of a person.

Fig. 27 illustrates detection of the eyes of a person using the system of the invention.

Fig. 28 illustrates successive blinks in a three-dimensional orthogonal coordinate system.

Figs. 29A and 29B illustrate conversion of peaks and valleys of eye movement histograms to information indicative of blinking.

Fig. 30 is a flow diagram illustrating the use of the system of the invention to detect drowsiness.

Fig. 31 illustrates the use of sub-images to search a complete image.

Fig. 32 illustrates the use of the system of the invention to detect nostrils and to track eye movement.

Fig. 33 illustrates the use of the system of the invention to detect an open eye.

Fig. 34 illustrates the use of the system of the invention to detect a closed eye.

Fig. 35 is a flow diagram of an alternative method of detecting drowsiness.

Fig. 36 illustrates use of the system to detect a pupil.

DETAILED DESCRIPTION OF THE INVENTION

The present invention discloses an application of the generic image processing system disclosed in commonly-owned PCT Application Serial Nos. PCT/FR97/01354 and PCT/EP98/05383, the contents of which are incorporated herein by reference for detection of various criteria associated with the human eye, and especially to detection that a driver is falling asleep while driving a vehicle.

The apparatus of the invention is similar to that described in the aforementioned PCT Application Serial Nos. PCT/FR97/01354 and PCT/EP98/05383, which will be described herein for purposes of clarity. Referring to Figs. 1 and 10, the generic image processing system 22 includes a spatial and temporal processing unit 11 in combination with a histogram formation unit 22a. Spatial and temporal processing unit 11 includes an input 12 that receives a digital video signal S originating from a video camera or other imaging device 13 which monitors a scene 13a. Imaging device 13 is preferably a

SAMSUNG EXHIBIT 1004
Page 16 of 404

conventional CMOS-type CCD camera, which for purposes of the presently-described invention is mounted on a vehicle facing the driver. It will be appreciated that when used in non-vehicular applications, the camera may be mounted in any desired fashion to detect the specific criteria of interest. It is also foreseen that any other appropriate sensor, e.g., ultrasound, IR, Radar, etc., may be used as the imaging device. Imaging device 13 may have a direct digital output, or an analog output that is converted by an A/D converter into digital signal S. Imaging device 13 may also be integral with generic image processing system 22, if desired.

sub. a9

While signal S may be a progressive signal, it is preferably composed of a succession of pairs of interlaced frames, TR_1 and TR'_1 and TR_2 and TR'_2, each consisting of a succession of horizontal scanned lines, e.g., $l_{1.1}$, $l_{1.2}$,...,$l_{1.17}$ in TR_1, and $_{2.1}$ in TR_2. Each line consists of a succession of pixels or image-points PI, e.g., $a_{1.1}$, $a_{1.2}$ and $a_{1.3}$ for line $l_{1.1}$; $al_{17.1}$ and $al_{17.22}$ for line $l_{1.17}$; $al_{1.1}$ and $a_{1.2}$ for line $l_{2.1}$. Signal S(PI) represents signal S composed of pixels PI.

sub. a10

S(PI) includes a frame synchronization signal (ST) at the beginning of each frame, a line synchronization signal (SL) at the beginning of each line, and a blanking signal (BL). Thus, S(PI) includes a succession frames, which are representative of the time domain, and within each frame, a series of lines and pixels, which are representative of the spatial domain.

sub. a11

In the time domain, "successive frames" shall refer to successive frames of the same type (i.e., odd frames such as TR_1 or even frames such as TR'_1), and "successive pixels in the same position" shall denote successive values of the pixels (PI) in the same location in successive frames of the same type, e.g., $a_{1.1}$ of $l_{1.1}$ in frame TR_1 and $a_{1.1}$ of $l_{1.1}$ in the next corresponding frame TR_2

sub. a12

Spatial and temporal processing unit 11 generates outputs ZH and SR 14 to a data bus 23 (Fig. 11), which are preferably digital signals. Complex signal ZH comprises a number of output signals generated by the system, preferably including signals indicating the existence and localization of an area or object in motion, and the speed V and the oriented direction of displacement DI of each pixel of the image. Also preferably output from the system is input digital video signal S, which is delayed (SR) to make it

SAMSUNG EXHIBIT 1004
Page 17 of 404

synchronous with the output ZH for the frame, taking into account the calculation time for the data in composite signal ZH (one frame). The delayed signal SR is used to display the image received by camera 13 on a monitor or television screen 10, which may also be used to display the information contained in composite signal ZH. Composite signal ZH may also be transmitted to a separate processing assembly 10a in which further processing of the signal may be accomplished.

Referring to Fig. 2, spatial and temporal processing unit 11 includes a first assembly 11a, which consists of a temporal processing unit 15 having an associated memory 16, a spatial processing unit 17 having a delay unit 18 and sequencing unit 19, and a pixel clock 20, which generates a clock signal HP, and which serves as a clock for temporal processing unit 15 and sequencing unit 19. Clock pulses HP are generated by clock 20 at the pixel rate of the image, which is preferably 13.5 MHZ.

Fig. 3 shows the operation of temporal processing unit 15, the function of which is to smooth the video signal and generate a number of outputs that are utilized by spatial processing unit 17. During processing, temporal processing unit 15 retrieves from memory 16 the smoothed pixel values LI of the digital video signal from the immediately prior frame, and the values of a smoothing time constant CI for each pixel. As used herein, LO and CO shall be used to denote the pixel values (L) and time constants (C) stored in memory 16 from temporal processing unit 15, and LI and CI shall denote the pixel values (L) and time constants (C) respectively for such values retrieved from memory 16 for use by temporal processing unit 15. Temporal processing unit 15 generates a binary output signal DP for each pixel, which identifies whether the pixel has undergone significant variation, and a digital signal CO, which represents the updated calculated value of time constant C.

Referring to Fig. 3, temporal processing unit 15 includes a first block 15a which receives the pixels PI of input video signal S. For each pixel PI, the temporal processing unit retrieves from memory 16 a smoothed value LI of this pixel from the immediately preceding corresponding frame, which was calculated by temporal processing unit 15 during processing of the immediately prior frame and stored in memory 16 as LO. Temporal processing unit 15 calculates the absolute value AB of the difference between

SAMSUNG EXHIBIT 1004
Page 18 of 404

each pixel value PI and LI for the same pixel position (for example $a_{1,1}$, of $l_{1,1}$ in TR_1 and of $l_{1,1}$ in TR_2:

$$AB = |PI-LI$$

Temporal processing unit 15 is controlled by clock signal HP from clock 20 in order to maintain synchronization with the incoming pixel stream. Test block 15b of temporal processing unit 15 receives signal AB and a threshold value SE. Threshold SE may be constant, but preferably varies based upon the pixel value PI, and more preferably varies with the pixel value so as to form a gamma correction. Known means of varying SE to form a gamma correction is represented by the optional block 15e shown in dashed lines. Test block 15b compares, on a pixel-by-pixel basis, digital signals AB and SE in order to determine a binary signal DP. If AB exceeds threshold SE, which indicates that pixel value PI has undergone significant variation as compared to the smoothed value LI of the same pixel in the prior frame, DP is set to "1" for the pixel under consideration. Otherwise, DP is set to "0" for such pixel.

When DP = 1, the difference between the pixel value PI and smoothed value LI of the same pixel in the prior frame is considered too great, and temporal processing unit 15 attempts to reduce this difference in subsequent frames by reducing the smoothing time constant C for that pixel. Conversely, if DP = 0, temporal processing unit 15 attempts to increase this difference in subsequent frames by increasing the smoothing time constant C for that pixel. These adjustments to time constant C as a function of the value of DP are made by block 15c. If DP = 1, block 15c reduces the time constant by a unit value U so that the new value of the time constant CO equals the old value of the constant CI minus unit value U.

$$CO=CI-U$$

If DP = 0, block 15c increases the time constant by a unit value U so that the new value of the time constant CO equals the old value of the constant Cl plus unit value U.

$$CO=CI+U$$

Thus, for each pixel, block 15c receives the binary signal DP from test unit 15b and time constant CI from memory 16, adjusts CI up or down by unit value U, and

SAMSUNG EXHIBIT 1004
Page 19 of 404

generates a new time constant CO which is stored in memory 16 to replace time constant CI.

In a preferred embodiment, time constant C, is in the form 2^P, where p is incremented or decremented by unit value U, which preferably equals 1, in block 15c. Thus, if DP = 1, block 15c subtracts one (for the case where U=1) from p in the time constant 2^P which becomes 2^{P-1}. If DP = 0, block 15c adds one to p in time constant 2^P, which becomes 2^{P+1}. The choice of a time constant of the form 2^P facilitates calculations and thus simplifies the structure of block 15c.

Block 15c includes several tests to ensure proper operation of the system. First, CO must remain within defined limits. In a preferred embodiment, CO must not become negative ($CO \geq 0$) and it must not exceed a limit N ($CO \leq N$), which is preferably seven. In the instance in which CI and CO are in the form 2^P, the upper limit N is the maximum value for p.

The upper limit N may be constant, but is preferably variable. An optional input unit 15f includes a register of memory that enables the user, or controller 42 to vary N. The consequence of increasing N is to increase the sensitivity of the system to detecting displacement of pixels, whereas reducing N improves detection of high speeds. N may be made to depend on PI (N may vary on a pixel-by-pixel basis, if desired) in order to regulate the variation of LO as a function of the lever of PI, i.e., $N_{ijt} = f(PI_{ijt})$, the calculation of which is done in block 15f, which in this case would receive the value of PI from video camera 13.

Finally, a calculation block 15d receives, for each pixel, the new time constant CO generated in block 15c, the pixel values PI of the incoming video signal S, and the smoothed pixel value LI of the pixel in the previous frame from memory 16. Calculation block 15d then calculates a new smoothed pixel value LO for the pixel as follows:

$$LO=LI + (PI - LI)/CO$$

If $CO = 2^P$, then

$$LO=LI + (PI - LI)/2^{po}$$

where "po", is the new value of p calculated in unit 15c and which replaces previous value of "pi" in memory 16.

SAMSUNG EXHIBIT 1004
Page 20 of 404

The purpose of the smoothing operation is to normalize variations in the value of each pixel PI of the incoming video signal for reducing the variation differences. For each pixel of the frame, temporal processing unit 15 retrieves LI and CI from memory 16, and generates new values LO (new smoothed pixel value) and CO (new time constant) that are stored in memory 16 to replace LI and CI respectively. As shown in Fig. 2, temporal processing unit 15 transmits the CO and DP values for each pixel to spatial processing unit 17 through the delay unit 18.

The capacity of memory 16 assuming that there are R pixels in a frame, and therefore 2R pixels per complete image, must be at least 2R(e+f) bits, where e is the number of bits required to store a single pixel value LI (preferably eight bits), and f is the number of bits required to store a single time constant CI (preferably 3 bits). If each video image is composed of a single frame (progressive image), it is sufficient to use R(e+f) bits rather than 2R(e+f) bits.

Spatial processing unit 17 is used to identify an area in relative movement in the images from camera 13 and to determine the speed and oriented direction of the movement. Spatial processing unit 17, in conjunction with delay unit 18, co-operates with a control unit 19 that is controlled by clock 20, which generates clock pulse HP at the pixel frequency. Spatial processing unit 17 receives signals DP_{ij} and CO_{ij} (where i and j correspond to the x and y coordinates of the pixel) from temporal processing unit 15 and processes these signals as discussed below. Whereas temporal processing unit 15 processes pixels within each frame, spatial processing unit 17 processes groupings of pixels within the frames.

Fig. 5 diagrammatically shows the temporal processing of successive corresponding frame sequences TR_1, TR_2, TR_3 and the spatial processing in the these frames of a pixel PI with coordinates x, y, at times t_1, t_2, and t_3. A plane in Fig. 5 corresponds to the spatial processing of a frame, whereas the superposition of frames corresponds to the temporal processing of successive frames.

Signals DP_{ij} and CO_{ij} from temporal processing unit 15 are distributed by spatial processing unit 17 into a first matrix 21 containing a number of rows and columns much smaller than the number of lines L of the frame and the number of pixels M per line.

SAMSUNG EXHIBIT 1004
Page 21 of 404

Matrix 21 preferably includes $2l + 1$ lines along the y axis and $2m+1$ columns along the x axis (in Cartesian coordinates), where l and m are small integer numbers. Advantageously, l and m are chosen to be powers of 2, where for example l is equal to 2^a and m is equal to 2^b, a and b being integer numbers of about 2 to 5, for example. To simplify the drawing and the explanation, m will be taken to be equal to l (although it may be different) and $m=l=2^3=8$. In this case, matrix 21 will have 2 x 8 + 1 = 17 rows and 17 columns. Fig. 4 shows a portion of the 17 rows Y_0, Y_1,... Y_{15}, Y_{16}, and 17 columns X_0, X_1, ... X_{15}, X_{16} which form matrix 21.

Sub. a14

Spatial processing unit 17 distributes into l x m matrix 21 the incoming flows of Dp_{ijt} and CO_{jt} from temporal processing unit 15. It will be appreciated that only a subset of all DP_{ijt} and CO_{ijt} values will be included in matrix 21, since the frame is much larger, having L lines and M pixels per row (e.g., 312.5 lines and 250-800 pixels), depending upon the TV standard used.

In order to distinguish the L x M matrix of the incoming video signal from the l x m matrix 21 of spatial processing unit 17, the indices i and j will be used to represent the coordinates of the former matrix and the indices x and y will be used to represent the coordinates of the latter. At a given instant, a pixel with an instantaneous value PI_{ijt} is characterized at the input of the spatial processing unit 17 by signals DP_{ijt} and CO_{ijt}. The $(2l+1)$ x $(2m + 1)$ matrix 21 is formed by scanning each of the L x M matrices for DP and CO.

In matrix 21, each pixel is defined by a row number between 0 and 16 (inclusive), for rows Y_o to Y_{16} respectively, and a column number between 0 and 16 (inclusive), for columns X_o to X_{16} respectively, in the case in which $l = m = 8$. In this case, matrix 21 will be a plane of 17 x 17 = 289 pixels.

In Fig. 4, elongated horizontal rectangles Y_o to Y_{16} (only four of which have been shown, i.e., Y_0, Y_1, Y_{15} and Y_{16}) and vertical lines X_0 to X_{16} (of which only four have been shown, i.e., X_0, X_1, X_{15} and X_{16}) illustrate matrix 21 with 17 x 17 image points or pixels having indices defined at the intersection of an ordinate row and an abscissa column. For example, the P_{88} is at the intersection of column 8 and row 8 as illustrated in Fig. 4 at position e, which is the center of matrix 21.

SAMSUNG EXHIBIT 1004
Page 22 of 404

In response to the HP and BL signals from clock 20 (Fig. 2), a rate control or sequencing unit 19: i) generates a line sequence signal SL at a frequency equal to the quotient of 13.5 MHZ (for an image with a corresponding number of pixels) divided by the number of columns per frame (for example 400) to delay unit 18, ii) generates a frame signal SC, the frequency of which is equal to the quotient 13.5/400 MHZ divided by the number of rows in the video image, for example 312.5, iii) and outputs the HP clock signal. Blanking signal BL is used to render sequencing unit 19 non-operational during synchronization signals in the input image.

A delay unit 18 carries out the distribution of portions of the L x M matrix into matrix 21. Delay unit 18 receives the DP, CO, and incoming pixel S(PI) signals, and distributes these into matrix 21 using clock signal HP and line sequence and column sequence signals SL and SC.

In order to form matrix 21 from the incoming stream of DP and CO signals, the successive row, Y_0 to Y_{16} for the DP and CO signals must be delayed as follows:

row Y_0 - not delayed;

row Y_1 - delayed by the duration of a frame line TP;

row Y_2 - delayed by 2 TP;

and so on until

row Y_{16} - delayed by 16 TP.

The successive delays of the duration of a frame row TP, are carried out in a cascade of sixteen delay circuits $r_1,r_2,...r_{16}$ that serve rows $Y_1,Y_2...Y_{16}$, respectively, row Y_0 being served directly by the DP and CO signals without any delay upon arriving from temporal processing unit 15. All delay circuits $r_1,r_2,...r_{16}$ may be built up by a delay line with sixteen outputs, the delay imposed by any section thereof between two successive outputs being constant and equal to TP.

Rate control unit 19 controls the scanning of the entire L x M frame matrix over matrix 21. The circular displacement of pixels in a row of the frame matrix on the 17 x 17 matrix, for example from X_0 to X_{16} on row Y_0, is done by a cascade of sixteen shift registers d on each of the 17 rows from Y_0 to Y_{16} (giving a total of 16 x 17 = 272 shift registers) placed in each row between two successive pixel positions, namely the register

SAMSUNG EXHIBIT 1004
Page 23 of 404

d_{01} between positions PI_{00} and PI_{01} register d_{02} between positions PI_{01}, and PI_{02}, etc. Each register imposes a delay TS equal to the time difference between two successive pixels in a row or line, using column sequence signal SC. Because rows l_1, l_2 ... l_{17} in a frame TR_1 (Fig. 1), for S(PI) and for DP and CO, reach delay unit 18 shifted by TP (complete duration of a row) one after the other, and delay unit 18 distributes them with gradually increasing delays of TP onto rows Y_0, Y_1 ... Y_{17}, these rows display the DP and CO signals at a given time for rows l_1,l_2 ... l_{17} in the same frame portion. Similarly in a given row, e.g., l_1, successive pixel signals $a_{1.1}$, $a_{1.2}$ ... arrive shifted by TS and shift registers d impose a delay also equal to TS. As a result, the pixels of the DP and CO signals in a given row Y_0 to Y_{16} in matrix 21, are contemporary, i.e., they correspond to the same frame portion.

The signals representing the COs and DPs in matrix 21 are available at a given instant on the 16 x 17 = 272 outputs of the shift registers, as well as upstream of the registers ahead of the 17 rows, i.e., registers $d_{0.1}$, $d_{1.1}$.... $d_{16.1}$, which makes a total of 16 x 17 + 17 = 17 x 17 outputs for the 17 x 17 positions $P_{0.0}$,$P_{0.1}$,...$P_{8.8}$...$P_{16.16}$.

In order to better understand the process of spatial processing, the system will be described with respect to a small matrix M3 containing 3 rows and 3 columns where the central element of the 9 elements thereof is pixel e with coordinates x = 8, y = 8 as illustrated below:

a b c
d e f (M3)
g h i

In matrix M3, positions a, b, c, d, f, g, h, i around the central pixel e correspond to eight oriented directions relative to the central pixel. The eight directions may be identified using the Freeman code illustrated in Fig. 6, the directions being coded 0 to 7 starting from the x axis, in steps of 45°. In the Freeman code, the eight possible oriented directions, may be represented by a 3-bit number since $2^3 = 8$.

Considering matrix M3, the 8 directions of the Freeman code are as follows:

SAMSUNG EXHIBIT 1004
Page 24 of 404

3 2 1
4 e 0
5 6 7

Returning to matrix 21 having 17 x 17 pixels, a calculation unit 17a examines at the same time various nested square second matrices centered on e, with dimensions 15 x 15, 13 x 13, 11 x 11, 9 x 9, 7 x 7, 5 x 5 and 3 x 3, within matrix 21, the 3 x 3 matrix being the M3 matrix mentioned above. Spatial processing unit 17 determines which matrix is the smallest in which pixels with DP = 1 are aligned along a straight line which determines the direction of movement of the aligned pixels.

For the aligned pixels in the matrix, the system determines if CO varies on each side of the central position in the direction of alignment, from +a in an oriented direction and -a in the opposite oriented direction, where 1<a<N. For example, if positions g, e, and c of M3 have values -1, 0, +1, then a displacement exists in this matrix from right to left in the (oriented) direction 1 in the Freeman code (Fig. 6). However, positions g, e, and c must at the same time have DP = 1. The displacement speed of the pixels in motion is greater when the matrix, among the 3 x 3 to 15 x 15 nested matrices, in which CO varies from +1 or -1 between two adjacent positions along a direction is larger. For example, if positions g, e, and c in the 9 x 9 matrix denoted M9 have values - 1, 0, +1 in oriented direction 1, the displacement will be faster than for values -1, 0, +1 in 3 x 3 matrix M3 (Fig. 7). The smallest matrix for which a line meets the test of DP=1 for the pixels in the line and CO varies on each side of the central position in the direction of alignment, from +a in an oriented direction and -a in the opposite oriented direction, is chosen as the principal line of interest.

Within a given matrix, a greater value of ÅCO indicates slower movement. For example, in the smallest matrix, i.e., the 3x3 matrix, CO=Å2 with DPs=1 determines subpixel movement i.e. one half pixel per image, and CO=Å3, indicates slower movement, i.e. one third of a pixel per image. In order to reduce the calculation power in the system and to simplify the hardware, preferably only those values of CO which are symmetrical relative to the central pixel are considered.

SAMSUNG EXHIBIT 1004
Page 25 of 404

Since CO is represented as a power of 2 in a preferred embodiment, an extended range of speeds may be identified using only a few bits for CO, while still enabling identification of relatively low speeds. Varying speed may be detected because, for example -2, 0, +2 in positions g, e, c in 3 x 3 matrix M3 indicates a speed half as fast as the speed corresponding to 1, 0, +1 for the same positions in matrix M3.

Sub. A16

Two tests are preferably performed on the results to remove uncertainties. The first test chooses the strongest variation, in other words the highest time constant, if there are variations of CO along several directions in one of the nested matrices. The second test arbitrarily chooses one of two (or more) directions along which the variation of CO is identical, for example by choosing the smallest value of the Freeman code, in the instance when identical lines of motion are directed in a single matrix in different directions. This usually arises when the actual direction of displacement is approximately between two successive coded directions in the Freeman code, for example between directions 1 and 2 corresponding to an (oriented) direction that can be denoted 1.5 (Fig. 6) of about 67.5- with the x axis direction (direction 0 in the Freeman code).

The scanning of an entire frame of the digital video signal S preferably occurs in the following sequence. The first group of pixels considered is the first 17 rows or lines of the frame, and the first 17 columns of the frame. Subsequently, still for the first 17 rows of the frame, the matrix is moved column by column from the left of the frame to the right, as shown in Fig. 5, i.e., from portion TM_1 at the extreme left, then TM_2 offset by one column with respect to TM_1, until TM_M (where M is the number of pixels per frame line or row) at the extreme right. Once the first 17 rows have been considered for each column from left to right, the process is repeated for rows 2 to 18 in the frame. This process continues, shifting down one row at a time until the last group of lines at the bottom of the frame, i.e., lines L - 16 ... L (where L is the number of lines per frame) are considered.

Spatial processing unit 17 generates the following output signals for each pixel: i) a signal V representing the displacement speed for the pixel, based upon the amplitude of the maximum variation of CO surrounding the pixel, the value of which may be, for example, represented by an integer in the range 0 - 7 if the speed is in the form of a

SAMSUNG EXHIBIT 1004
Page 26 of 404

power of 2, and therefore may be stored in 3 bits, ii) a signal DI representing the direction of displacement of the pixel, which is calculated from the direction of maximum variation, the value of DI being also preferably represented by an integer in the range 0 - 7 corresponding to the Freeman code, stored in 3 bits, iii) a binary validation signal VL which indicates whether the result of the speed and oriented direction is valid, in order to be able to distinguish a valid output with V = 0 and DI = 0, from the lack of an output due to an incident, this signal being 1 for a valid output or 0 for an invalid output, iv) a time constant signal CO, stored in 3 bits, for example, and v) a delayed video signal SR consisting of the input video signal S delayed in the delay unit 18 by 16 consecutive line durations TR and therefore by the duration of the distribution of the signal S in the 17x 17 matrix 21, in order to obtain a video signal timed to matrix 21, which may be displayed on a television set or monitor. Also output are the clock signal HP, line sequence signal SL and column sequence signal SC from control unit 19.

Nested hexagonal matrices (Fig 8) or an inverted L-shaped matrix (Fig. 9) may be substituted for the nested rectangular matrices in Figs. 4 and 7. In the case shown in Fig. 8, the nested matrices (in which only the most central matrices MRI and MR2 have been shown) are all centered on point MR0 which corresponds to the central point of matrices M3, M9 in Fig. 7. The advantage of a hexagonal matrix system is that it allows the use of oblique coordinate axes x_a, y_a, and a breakdown into triangles with identical sides, to carry out an isotropic speed calculation.

The matrix in Fig. 9 is composed of a single row (L_u) and a single column (C_u) starting from the central position MR_u in which the two signals DP and CO respectively are equal to "1" for DP and increase or decrease by one unit for CO, if movement occurs.

If movement is in the direction of the x coordinate, the CO signal is identical in all positions (boxes) in column C_u, and the binary signal DP is equal to 1 in all positions in row L_u, from the origin MR_u, with the value CO_u, up to the position in which CO is equal to CO_u +1 or -1 inclusive. If movement is in the direction of the y coordinate, the CO signal is identical in all positions (boxes) in row L_u, and the binary signal DP is equal to 1 in all positions in column C_u, from the origin MR_u, with the value CO_u, up to the

SAMSUNG EXHIBIT 1004
Page 27 of 404

position in which CO is equal to CO_u, +1 or -1 inclusive. If movement is oblique relative to the x and y coordinates, the binary signal DP is equal to 1 and CO is equal to CO_u in positions (boxes) of L_u and in positions (boxes) of C_u, the slope being determined by the perpendicular to the line passing through the two positions in which the signal CO_u changes by the value of one unit, the DP signal always being equal to 1.

Sub. A17

Fig. 9 shows the case in which DP = I and CO_u changes value by one unit in the two specific positions L_{u3} and C_{u5} and indicates the corresponding slope P_P. In all cases, the displacement speed is a function of the position in which CO changes value by one unit. If CO changes by one unit in L_u or C_u only, it corresponds to the value of the CO variation position. If CO changes by one unit in a position in L_u and in a position in C_u, the speed is proportional to the distance between MR_u and E_x (intersection of the line perpendicular to C_u- L_u passing through MR_u).

Fig. 10 shows an imaging device with sensors located at the intersections of concentric lines c and radial lines d that correspond to the rows and columns of a rectangular matrix imaging device. The operation of such an imaging device is controlled by a circular scanning sequencer. In this embodiment, angular sector shaped n x n matrices MC are formed, (a 3x3 matrix MC3 and a 5x5 matrix MC5 are shown) and except for sequencing differences, the matrices are processed identical to the square matrix embodiments discussed above.

As shown in Figs. 11-16, spatial and temporal processing unit 11 is used in connection with a histogram processor 22a for identifying objects within the input signal based upon user specified criteria for identifying such objects. A bus Z-Z_1 (See Figs. 2, 11 and 12) transfers the output signals of spatial and temporal processing unit 11 to histogram processor 22a. Histogram processor 22a generates composite output signal ZH which contains information on the areas in relative movement in the scene.

Referring to Fig. 12, histogram processor 22a includes a bus 23 for communicating signals between the various components thereof, for receiving input commands from a controller 42 and for transmitting output signals to controller 42. Histogram formation and processing blocks 24 - 29 receive the various input signals, i.e., delayed digital video signal SR, speed V, oriented directions (in Freeman code) DI, time

SAMSUNG EXHIBIT 1004
Page 28 of 404

constant CO, first axis x(m) and second axis y(m), which are discussed in detail below. The function of each histogram formation block is to enable a histogram to be formed for the domain associated with that block. For example, histogram formation block 24 receives the delayed digital video signal SR and enables a histogram to be formed for the luminance values of the video signal. Since the luminance of the signal will generally be represented by a number in the range of 0-255, histogram formation block 24 is preferably a memory addressable with 8 bits, with each memory location having a sufficient number of bits to correspond to the number of pixels in a frame.

Histogram formation block 25 receives speed signal V and enables a histogram to be formed for the various speeds present in a frame. In a preferred embodiment, the speed is an integer in the range 0-7. Histogram formation block 25 is then preferably a memory addressable with 3 bits, with each memory location having a sufficient number of bits to correspond to the number of pixels in a frame.

Histogram formation block 26 receives oriented direction signal DI and enables a histogram to be formed for the oriented directions present in a frame. In a preferred embodiment, the oriented direction is an integer in the range 0-7, corresponding to the Freeman code. Histogram formation block 26 is then preferably a memory addressable with 3 bits, with each memory location having a sufficient number of bits to correspond to the number of pixels in a frame.

Histogram formation block 27 receives time constant signal CO and enables a histogram to be formed for the time constants of the pixels in a frame. In a preferred embodiment, the time constant is an integer in the range 0-7. Histogram formation block 27 is then preferably a memory addressable with 3 bits, with each memory location having a sufficient number of bits to correspond to the number of pixels in a frame.

Histogram formation blocks 28 and 29 receive the x and y positions respectively of pixels for which a histogram is to be formed, and form histograms for such pixels, as discussed in greater detail below. Histogram formation block 28 is preferably addressable with the number of bits corresponding to the number of pixels in a line, with each memory location having a sufficient number of bits to correspond to the number of lines in a frame, and histogram formation block 29 is preferably addressable with the

SAMSUNG EXHIBIT 1004

Page 29 of 404

number of bits corresponding to the number of lines in a frame, with each memory location having a sufficient number of bits to correspond to the number of pixels in a line.

Referring to Figs. 12 and 14, each of the histogram formation blocks 24 - 29 has an associated validation block 30 - 35 respectively, which generates a validation signal V1 - V6 respectively. In general, each of the histogram formation blocks 24-29 is identical to the others and functions in the same manner. For simplicity, the invention will be described with respect to the operation of histogram formation block 25, it being appreciated that the remaining histogram formation blocks operate in a like manner. Histogram formation block 25 includes a histogram forming portion 25a, which forms the histogram for that block, and a classifier 25b, for selecting the criteria of pixels for which the histogram is to be formed. Histogram forming portion 25a and classifier 25b operate under the control of computer software in an integrated circuit (not shown), to extract certain limits of the histograms generated by the histogram formation block, and to control operation of the various components of the histogram formation units.

Referring to Fig. 14, histogram forming portion 25a includes a memory 100, which is preferably a conventional digital memory. In the case of histogram formation block 25 which forms a histogram of speed, memory 100 is sized to have addresses 0-7, each of which may store up to the number of pixels in an image. Between frames, memory 100 is initiated, i.e., cleared of all memory, by setting *init*=l in multiplexors 102 and 104. This has the effect, with respect to multiplexor 102 of selecting the "0" input, which is output to the Data In line of memory 100. At the same time, setting *init*=l causes multiplexor 104 to select the Counter input, which is output to the Address line of memory 100. The Counter input is connected to a counter (not shown) that counts through all of the addresses for memory 100, in this case O≤address≤7. This has the effect of placing a zero in all memory addresses of memory 100. Memory 100 is preferably cleared during the blanking interval between each frame. After memory 100 is cleared, the *init* line is set to zero, which in the case of multiplexor 102 results in the content of the Data line being sent to memory 100, and in the case of multiplexor 104 results in the data from spatial processing unit 117, i.e., the V data, being sent to the Address line of memory 100.

SAMSUNG EXHIBIT 1004
Page 30 of 404

sub.a18

Classifier 25b enables only data having selected classification criteria to be considered further, meaning to possibly be included in the histograms formed by histogram formation blocks 24-29. For example, with respect to speed, which is preferably a value in the range of 0-7, classifier 25b may be set to consider only data within a particular speed category or categories, e.g., speed 1, speeds 3 or 5, speed 3-6, etc. Classifier 25b includes a register 106 that enables the classification criteria to be set by the user, or by a separate computer program. By way of example, register 106 will include, in the case of speed, eight registers numbered 0-7. By setting a register to "1", e.g., register number 2, only data that meets the criteria of the selected class, e.g., speed 2, will result in a classification output of "1". Expressed mathematically, for any given register in which R(k) = b, where k is the register number and b is the boolean value stored in the register:

Output= R(data(V))

So for a data point V of magnitude 2, the output of classifier 25b will be "1" only if R(2)=1. The classifier associated with histogram formation block 24 preferably has 256 registers, one register for each possible luminance value of the image. The classifier associated with histogram formation block 26 preferably has 8 registers, one register for each possible direction value. The classifier associated with histogram formation block 27 preferably has 8 registers, one register for each possible value of CO. The classifier associated with histogram formation block 28 preferably has the same number of registers as the number of pixels per line. Finally, the classifier associated with histogram formation block 29 preferably has the same number of registers as the number of lines per frame. The output of each classifier is communicated to each of the validation blocks 30-35 via bus 23, in the case of histogram formation blocks 28 an 29, through combination unit 36, which will be discussed further below.

sub.a19

Validation units 30-35 receive the classification information in parallel from all classification units in histogram formation blocks 24 - 29. Each validation unit generates a validation signal which is communicated to its associated histogram formation block 24 - 29. The validation signal determines, for each incoming pixel, whether the histogram formation block will utilize that pixel in forming it histogram. Referring again to Fig. 14,

SAMSUNG EXHIBIT 1004
Page 31 of 404

which shows histogram formation block 25, validation unit 31 includes a register block 108 having a register associated with each histogram formation block, or more generally, a register associated with each data domain that the system is capable of processing, in this case, luminance, speed, direction, CO, and x and y position. The content of each register in register block 108 is a binary value that may be set by a user or by a computer controller. Each validation unit receive via bus 23 the output of each of the classifiers, in this case numbered 0 ... p, keeping in mind that for any data domain, e.g., speed, the output of the classifier for that data domain will only be "1" if the particular data point being considered is in the class of the registers set to "1" in the classifier for that data domain. The validation signal from each validation unit will only be "1" if for each register in the validation unit that is set to "1", an input of "1" is received from the classifier for the domain of that register. This may be expressed as follows:

$$out = (\overline{in}_0 + \mathrm{Reg}_0).\ (\overline{in}_1 + \mathrm{Reg}_1) \ldots (\overline{in}_n + \mathrm{Reg}_n)(in_0 + in_1 + \ldots in_n)$$

where Reg_0 is the register in the validation unit associated with input in_0. Thus, using the classifiers in combination with validation units 30 - 35, the system may select for processing only data points in any selected classes within any selected domains. For example, the system may be used to detect only data points having speed 2, direction 4, and luminance 125 by setting each of the following registers to "1": the registers in the validation units for speed, direction, and luminance, register 2 in the speed classifier, register 4 in the direction classifier, and register 125 in the luminance classifier. In order to form those pixels into a block, the registers in the validation units for the x and y directions would be set to "1" as well.

Sub. A20

Referring again to Fig. 13, validation signal V2 is updated on a pixel-by-pixel basis. If, for a particular pixel, validation signal V2 is "1", adder 110 increments the output of memory 100 by one. If, for a particular pixel, validation signal V2 is "0", adder 100 does not increments the output of memory. In any case, the output of adder 100 is stored in memory 100 at the address corresponding to the pixel being considered. For example, assuming that memory 100 is used to form a histogram of speed, which may be categorized as speeds 0-7, and where memory 100 will include 0-7 corresponding memory locations, if a pixel with speed 6 is received, the address input to

SAMSUNG EXHIBIT 1004
Page 32 of 404

multiplexor 104 through the data line will be 6. Assuming that validation signal V2 is "1", the content in memory at location 6 will be incremented. Over the course of an image, memory 100 will contain a histogram of the pixels for the image in the category associated with the memory. If, for a particular pixel, validation signal V2 is "0" because that pixel is not in a category for which pixels are to be counted (e g., because that pixel does not have the correct direction, speed, or luminance), that pixel will not be used in forming the histogram.

For the histogram formed in memory 100, key characteristics for that histogram are simultaneously computed in a unit 112. Referring to Fig. 14, unit 112 includes memories for each of the key characteristics, which include the minimum (MIN) of the histogram, the maximum (MAX) of the histogram, the number of points (NBPTS) in the histogram, the position (POSRMAX) of the maximum of the histogram, and the number of points (RMAX) at the maximum of the histogram. These characteristics are determined in parallel with the formation of the histogram as follows:

For each pixel with a validation signal V2 of "1":

(a) if the data value of the pixel < MIN (which is initially set to the maximum possible value of the histogram), then write data value in MIN;

(b) if the data value of the pixel > MAX (which is initially set to the minimum possible value of the histogram), then write data value in MAX;

(c) if the content of memory 100 at the address of the data value of the pixel > RMAX (which is initially set to the minimum possible value of the histogram), then i) write data value in POSRMAX and ii) write the memory output in RMAX.

(d) increment NBPTS (which is initially set to zero).

At the completion of the formation of the histogram in memory 100 at the end of each frame, unit 112 will contain important data characterizing the histogram. The histogram in each memory 100, and the characteristics of the histogram in units 112 are read during the scanning spot of each frame by controller 42, and the memories 100 are cleared and units 112 are re-initialized for processing the next frame.

Sub. A2 The system of the invention includes a semi-graphic masking function to select pixels to be considered by the system. Fig. 16 shows a typical image 53 consisting of

SAMSUNG EXHIBIT 1004
Page 33 of 404

pixels arranged in a Q x R matrix, which is divided into sub-matrices 51 each having a dimension of s x t, wherein each s x t sub-matrix includes s x t number of pixels of the image. Each sub- matrix shown in Fig. 17 is a 3x4 matrix. In a preferred embodiment, s=9 and t=12, although any appropriate sub-matrix size may be used, if desired, including 1 x 1. Referring to Fig. 12, histogram processor 22a includes a semi-graphic memory 50, which includes a one-bit memory location corresponding to each s x t matrix. For any given sub-matrix 51, the corresponding bit in memory 50 may be set to "0", which has the effect of ignoring all pixels in such sub-matrix 50, or may be set to "1" in which case all pixels in such sub-matrix will be considered in forming histograms. Thus, by using semi-graphic memory 50, it is possible to limit those areas of the image to be considered during histogram formation. For example, when an image of a road taken by a camera facing forward on a vehicle is used to detect the lanes of the road, the pixel information of the road at the farthest distances from the camera generally does not contain useful information. Accordingly, in such an application, the semi- graphic memory is used to mask off the distant portions of the road by setting semi-graphic memory 50 to ignore such pixels. Alternatively, the portion of the road to be ignored may be masked by setting the system to track pixels only within a detection box that excludes the undesired area of the screen, as discussed below.

In operation, for any pixel under consideration, an AND operation is run on the validation signal for such pixel and the content of semi-graphic memory 50 for the sub-matrix in which that pixel is located. If the content of semi-graphic memory 50 for the sub-matrix in which that pixel is located contains "0", the AND operation will yield a "0" and the pixel will be ignored, otherwise the pixel will be considered in the usual manner. It is foreseen that the AND operation may be run on other than the validation signal, with the same resultant functionality. Also, it is foreseen that memory 50 may be a frame size memory, with each pixel being independently selectable in the semi-graphic memory. This would enable any desired pixels of the image to be considered or ignored as desired. Semi-graphic memory 50 is set by controller 42 via data bus 23.

Fig. 16 shows an example of the successive classes C_1, C_2...C_{n-1}, C_n, each representing a particular velocity, for a hypothetical velocity histogram, with their being

SAMSUNG EXHIBIT 1004
Page 34 of 404

categorization for up to 16 velocities (15 are shown) in this example. Also shown is envelope 38, which is a smoothed representation of the histogram.

Sub. A22

In order to locate the position of an object having user specified criteria within the image, histogram blocks 28 and 29 are used to generate histograms for the x and y positions of pixels with the selected criteria. These are shown in Fig. 13 as histograms along the x and y coordinates. These x and y data are output to moving area formation block 36 which combines the abscissa and ordinate information $x(m)_2$ and $y(m)_2$ respectively into a composite signal xy(m) that is output onto bus 23. A sample composite histogram 40 is shown in Fig. 13. The various histograms and composite signal xy(m) that are output to bus 23 are used to determine if there is a moving area in the image, to localize this area, and/or to determine its speed and oriented direction. Because the area in relative movement may be in an observation plane along directions x and y which are not necessarily orthogonal, as discussed below with respect to Fig. 18, a data change block 37 may be used to convert the x and y data to orthogonal coordinates. Data change block 37 receives orientation signals $x(m)_1$ and $y(m)_1$ for $x(m)_0$ and $y(m)_0$ axes, as well as pixel clock signals HP, line sequence and column sequence signals SL and SC (these three signals being grouped together in bundle F in Figs. 2, 4, and 10) and generates the orthogonal $x(m)_1$ and $y(m)_1$ signals that are output to histogram formation blocks 28 and 29 respectively.

Sub. A23

In order to process pixels only within a user-defined area, the x-direction histogram formation unit 28 may be programmed to process pixels only in a class of pixels defined by boundaries, i.e. XMIN and XMAX. This is accomplished by setting the XMIN and XMAX values in a user-programmable memory in x-direction histogram formation unit 28 or in linear combination units 30-35. Any pixels outside of this class will not be processed. Similarly, y-direction histogram formation unit 29 may be set to process pixels only in a class of pixels defined by boundaries YMIN and YMAX. This is accomplished by setting the YMIN and YMAX values in a user-programmable memory in y-direction histogram formation unit 29 or in linear combination units 30-35. Thus, the system can process pixels only in a defined rectangle by setting the XMIN and XMAX, and YMIN and YMAX values as desired. Of course, the classification criteria

SAMSUNG EXHIBIT 1004
Page 35 of 404

and validation criteria from the other histogram formation units may be set in order to form histograms of only selected classes of pixels in selected domains within the selected rectangular area. The XMIN and XMAX memory locations have a sufficient number of bits to represent the maximum number of pixels in the x dimension of the image under consideration, and the YMIN and YMAX memory locations have a sufficient number of bits to represent the maximum number of pixels in the y dimension the image under consideration. As discussed further below, the x and y axes may be rotated in order to create histograms of projections along the rotated axes. In a preferred embodiment, the XMIN, XMAX, YMIN and YMAX memory locations have a sufficient number of bits to represent the maximum number of pixels along the diagonal of the image under consideration (the distance from "Origin" to "Stop" in Fig. 15). In this way, the system may be used to search within a user-defined rectangle along a user-defined rotated axis system.

In order for a pixel PI(a,b) to be considered in the formation of x and y direction histograms, whether on the orthogonal coordinate axes or along rotated axes, the conditions XMIN<a<XMAX and YMIN<b<YMAX must be satisfied. The output of these tests may be ANDed with the validation signal so that if the conditions are not satisfied, a logical "0" is ANDed with the validation signal for the pixel under consideration, thereby avoiding consideration of the pixel in the formation of x and y direction histograms.

Fig. 13 diagrammatically represents the envelopes of histograms 38 and 39, respectively in x and y coordinates, for velocity data. In this example, x_M and y_M represent the x and y coordinates of the maxima of the two histograms 38 and 39, whereas l_a and l_b for the x axis and l_c and l_d for the y axis represent the limits of the range of significant or interesting speeds, l_a and l_c being the longer limits and l_b and l_d being the upper limited of the significant portions of the histograms. Limits l_a, l_b, l_c and l_d may be set by the user or by an application program using the system, may be set as a ratio of the maximum of the histogram, e.g., $x_M/2$, or may be set as otherwise desired for the particular application.

SAMSUNG EXHIBIT 1004
Page 36 of 404

The vertical lines L_a and L_b of abscissas l_a and l_b and the horizontal lines L_c and L_d of ordinals l_c and l_d form a rectangle that surrounds the cross hatched area 40 of significant speeds (for all x and y directions). A few smaller areas 41 with longer speeds, exist close to the main area 40, and are typically ignored. In this example, all that is necessary to characterize the area with the largest variation of the parameter for the histogram, the speed V in this particular case, is to identify the coordinates of the limits l_a, l_b, l_c and l_d and the maxima X_M and Y_M, which may be readily derived for each histogram from memory 100, the data in units 112, and the xy(m) data block.

Thus, the system of the invention generates in real time, histograms of each of the parameters being detected. Assuming that it were desired to identify an object with a speed of "2" and a direction of "4", the validation units for speed and direction would be set to "1", and the classifiers for speed "2" and direction "4" would be set to "1". In addition, since it is desired to locate the object(s) with this speed and direction on the video image, the validation signals for histogram formation blocks 28 and 29, which correspond to the x and y coordinates, would be set to "1" as well. In this way, histogram formation blocks 28 and 29 would form histograms of only the pixels with the selected speed and direction, in real-time. Using the information in the histogram, and especially POSRMAX, the object with the greatest number of pixels at the selected speed and direction could be identified on the video image in real-time. More generally, the histogram formation blocks can localize objects in real-time meeting user-selected criteria, and may produce an output signal if an object is detected. Alternatively, the information may be transmitted, e.g., by wire, optical fiber or radio relay for remote applications, to a control unit, such as unit 10a in Fig. 1, which may be near or remote from spatial and temporal processing unit 11.

While the system of the invention has been described with respect to formation of histograms using an orthogonal coordinate system defined by the horizontal and vertical axes of the video image, the system may be used to form histograms using non-orthogonal axes that are user-defined. Figs. 15A and 15B show a method of using rotation of the analysis axis to determine the orientation of certain points in an image, a method which may be used, for example to detect lines. In a preferred embodiment, the

SAMSUNG EXHIBIT 1004
Page 37 of 404

x-axis may be rotated in up to 16 different directions (180°/16), and the y-axis may be independently rotated by up to 16 different directions. Rotation of the axes is accomplished using data line change block 37 which receives as an input the user-defined axes of rotation for each of the x any y axes, and which performs a Hough transform to convert the x and y coordinate values under consideration into the rotated coordinate axis system for consideration by the x and y histogram formation units 28 and 29. The operation of conversion between coordinate systems using a Hough transform is known in the art. Thus, the user may select rotation of the x-coordinate system in up to 16 different directions, and may independently rotate the y-coordinate system in up to 16 different directions. Using the rotated coordinate systems, the system may perform the functionality described above, including searching within user-defined rectangles (on the rotated axes), forming histograms on the rotated axes, and searching using velocity, direction, etc.

As discussed above, each histogram formation unit calculates the following values for its respective histogram.

MIN, MAX, NBPTS, RMAX, POSRMAX

Given that these values are calculated in real-time, the use of these values allows the system to rapidly identify lines on an image. While this may be accomplished in a number of different ways, one of the easier methods is to calculate R, where R =NBPTS/RMAX, i.e., the ratio of the number of points in the histogram to the number of points in the maximal line. The smaller this ratio, i.e., the closer R approaches 1, the more perpendicularly aligned the data points under consideration are with the scanning axis.

Fig. 15A shows a histogram of certain points under consideration, where the histogram is taken along the x-axis, i.e., projected down onto the x-axis. In this example, the ratio R, while not calculated, is high, and contains little information about the orientation of the points under consideration. As the x-axis is rotated, the ratio R increases, until, as shown in Fig. 15B, at approximately 45° the ratio R would reach a maximum. This indicates that the points under consideration are most closely aligned perpendicular to the 45° x-axis. In operation, on successive frames, or on the same

SAMSUNG EXHIBIT 1004
Page 38 of 404

frame if multiple x-direction histogram formation units are available, it is advantageous to calculate R at different angles, e.g., 33.75° and 57.25° (assuming the axes are limited to 16 degrees of rotation), in order to constantly ensure that R is at a minimum. For applications in which it is desirable to detect lines, and assuming the availability of 16 x-direction histogram formation units, it is advantageous to carry out the calculation of R simultaneously along all possible axes to determine the angle with the minimum R to determine the direction of orientation of the line. Because the x and y axes may be rotated independently, the x and y histogram formation units are capable of simultaneously independently detecting lines, such as each side line of a road, in the same manner.

As discussed above, the system of the invention may be used to search for objects within a bounded area defined by XMIN, XMAX, YMIN and YMAX. Because moving object may leave the bounded area the system preferably includes an anticipation function which enables XMIN, XMAX, YMIN and YMAX to be automatically modified by the system to compensate for the speed and direction of the target. This is accomplished by determining values for O-MVT, corresponding to orientation (direction) of movement of the target within the bounded area using the direction histogram, and I-MVT, corresponding to the intensity (velocity) of movement. Using these parameters, controller 42 may modify the values of XMIN, XMAX, YMIN and YMAX on a frame-by-frame basis to ensure that the target remains in the bounded box being searched. These parameters also enable the system to determine when a moving object, e.g., a line, that is being tracked based upon its axis of rotation, will be changing its axis of orientation, and enable the system to anticipate a new orientation axis in order to maintain a minimized value of R.

Referring to Fig. 12, a controller 42, which is preferably a conventional microprocessor-based controller, is used to control the various elements of the system and to enable user input of commands and controls, such as with a computer mouse and keyboard (not shown), or other input device. Components 11a and 22a, and controller 42, are preferably formed on a single integrated circuit. Controller 42 is in communication with data bus 23, which allows controller 42 to run a program to control

SAMSUNG EXHIBIT 1004
Page 39 of 404

various parameters that may be set in the system and to analyze the results. In order to select the criteria of pixels to be tracked, controller 42 may also directly control the following: i) content of each register in classifiers 25b, ii) the content of each register in validation units 31, iii) the content of XMIN, XMAX, YMIN and YMAX, iv) the orientation angle of each of the x and y axes, and v) semi-graphic memory 50. Controller 42 may also retrieve i) the content of each memory 100 and ii) the content of registers 112, in order to analyze the results of the histogram formation process. In addition, in general controller 42 may access and control all data and parameters used in the system.

The system of the invention may be used to detect the driver of a vehicle falling asleep and to generate an alarm upon detection thereof. While numerous embodiments of the invention will be described, in general the system receives an image of the driver from a camera or the like and processes the image to detect one or more criteria of the eyes of the driver to determine when the driver's eyes are open and when they are closed. As discussed above, a wide-awake person generally blinks at relatively regular intervals of about 100 to 200 ms. When a person becomes drowsy, the length of each eye blink increases to approximately 500 to 800 ms, with the intervals between blinks being becoming longer and variable. Using the information on the opening and closing of the driver's eyes, the system measures the duration of each blink and/or the intervals between blinks to determine when the driver is falling asleep. This is possible because the video signal coming from the sensor in use, e.g., sensor 310 of Fig. 21, preferably generates 50 or 60 frames per second, i.e., a frame every 20 ms or 16.66 ms respectively. This makes it possible for the system, which processes each image in real time, to distinguish between blink lengths of 100 to 200 ms for an awake person from blink lengths of 500 to 800 ms for a drowsy person, i.e., a blink length of 5 to 10 frames for an awake person or a blink length of 25 to 40 frames for a drowsy person, in the case of a 50 frames per second video signal.

The system of the invention utilizes a video camera or other sensor to receive images of the driver T in order to detect when the driver is falling asleep. While various methods of positioning the sensor shall be described, the sensor may generally be

SAMSUNG EXHIBIT 1004
Page 40 of 404

position by any means and in any location that permits acquisition of a continuous image of the face of the driver when seated in the driver's seat. Thus, it is foreseen that sensor 10 may be mounted to the vehicle or on the vehicle in any appropriate location, such as in or on the vehicle dashboard, steering wheel, door, rear-view mirror, ceiling, etc., to enable sensor 10 to view the face of the driver. An appropriate lens may be mounted on the sensor 10 to give the sensor a wider view if required to see drivers of different sizes.

Sub. a30

Figs. 18 and 19 show a conventional rear-view mirror arrangement in which a driver can see ahead along direction 301 and rearward (via rays 302a and 302b) through a rear-view mirror 303. Referring to Fig. 20, mirror 303 is attached to the vehicle body 305 through a connecting arm 304 which enables adjustment of vision axes 302a and 302b. Axes 302a and 302b are generally parallel and are oriented in the direction of the vehicle. Optical axis 306, which is perpendicular to the face 303a of mirror 303, divides the angle formed by axes 302a and 302b into equal angles a and b. Axis 307, which is perpendicular to axis 302b and therefore generally parallel to the attachment portion of vehicle body 305, defines an angle c between axis 307 and mirror face 303a which is generally equal to angles a and b. A camera or sensor 310 is preferably mounted to the mirror by means of a bracket 299. The camera may be mounted in any desired position to enable the driver to have a clear view of the road while enabling sensor 310 to acquire images of the face of the driver. Bracket 299 may be an adjustable bracket, enabling the camera to be faced in a desired direction, i.e., toward the driver, or may be at a fixed orientation such that when the mirror is adjusted by drivers of different sizes, the camera continues to acquire the face of the driver. The signal from the camera is communicated to the image processing system, which operates as described below, by means of lead wires or the like (not shown in Figs. 18-20).

Sub. a31

Figs. 21 and 22 show a rear-view mirror assembly 308 in which sensor 310 is mounted interior to the mirror assembly. Mirror assembly 308 is adapted so that as assembly 308 is adjusted by a driver, sensor 310 remains directed toward the face of the driver. Rear-view mirror assembly 308 includes a two-way mirror 309 having a face 309a, movably oriented to provide a rear view to the driver. Sensor 310, which is preferably an electronic mini-camera or MOS sensor with a built-in lens, is affixed to a

35

SAMSUNG EXHIBIT 1004
Page 41 of 404

bracket 311, is oriented facing the driver using mechanical arrangement that enables sensor 310 to receive an image of the face of the driver when mirror 309 adjusted so that the driver has a rear view of the vehicle. The mechanical arrangement consists of a Cardan type mechanical joint, which causes automatic adjustment of the bracket 311 when the driver when the driver adjusts the rear view mirror so that the receiving face 310a of sensor 310 receives the image of the face of the driver, i.e., optical axis 310b remains aligned toward the head of the driver.

Bracket 311 includes rods 312 and 313 that are movably coupled together by a pivot pin 314a (Fig. 21) or a sleeve 314b (Fig. 22). Rod 312 is attached at one end to a mounting portion of the vehicle 305. A pivot pin 315, which preferably consists of a ball and two substantially hemispherical caps, facilitates movement of mirror assembly 308. Rod 312 extends through pivot pin 315, and attaches to rod 313 via a sleeve 314b or another pivot pin 314a. At one end, rod 313 rigidly supports bracket 311 on which sensor 310 is mounted. Rod 313 extends through clamp 316 of mirror assembly 308 via a hollow pivot 317. Pivot 317 includes a ball having a channel therethrough in which rod 313 is engaged, and which rotates in substantially hemispherical caps supported by clamp 316. The joint constantly maintains a desired angle between mirror 309 and bracket 311, thereby permitting normal adjustment of rear-view mirror 309 while bracket 311 adjusts the direction of sensor 310 so that the face 310a of the sensor will receive an image of the face of the driver. If desired, it is foreseen that sensor 310 may be mounted interior to rear-view mirror assembly 308 at a fixed angle relative to the face 309a of the mirror assembly, provided that sensor 310 is able to receive an image of the face of the driver when the mirror is adjusted to drivers of different sizes. A wide angle lens may be mounted to sensor 310 to better enable the sensor to be used under different adjustment circumstances.

Sub. a32

Sensor 310 is connected by means of one or more lead wires to image processor 319, which is preferably an image processing system of the type discussed above and is preferably in the form of an integrated circuit inside rear-view mirror assembly 308. In a preferred embodiment, image processing system 319 is integrally constructed with sensor 310. Alternatively, image processing system 319 may be located exterior to mirror

SAMSUNG EXHIBIT 1004
Page 42 of 404

assembly 308 by means of conventional lead wires. While controller 310 is preferably a microprocessor, it is foreseen that controller 310 may be an ASIC or simple controller designed to perform the functions specified herein, particularly if the system is embedded, e.g. contained in a mirror assembly or integral with a vehicle.

Electroluminescent diodes 320 may be incorporated in mirror assembly 308 to illuminate the face of the driver with infrared radiation when ambient light is insufficient for image processing system 319 to determine the blinking characteristics of the driver. When such diodes are in use, sensor 310 must be of the type capable of receiving infrared radiation. Illumination of electroluminescent diodes 320 may be controlled by controller 42 (Fig. 12) of image processing system 319, if desired. For example, controller 42 may illuminate electroluminescent diodes 320 in the event that the histograms generated by image processing system 319 do not contain sufficient useful information to detect the features of the driver's face required, e.g., NBPTS is below a threshold. Electroluminescent diodes 320 may be illuminated gradually, if desired, and may operate in connection with one or more photocells (not shown) that generate a signal as to the ambient lighting near the driver, and which may be used to control electroluminescent diodes 320, either alone or in combination with controller 42 or another control circuit. If desired, an IR or other source of EMF radiation may be used to illuminate the face of the driver at all times, provided that sensor 310 is compatible with the illumination source. This eliminates many problems that may be associated with the use of ambient lighting to detect drowsiness.

An optional alarm 322, which may be for example a buzzer, bell or other notification means, may be activated by controller 42 upon detecting that the driver is falling asleep. All of the components contained in mirror assembly 308, and image processing system 319, are preferably powered by the electrical system of the vehicle.

Image processing system 319 monitors the alertness of the driver by detecting, in real time and on a continuous basis, the duration of the blinks of the driver's eyes and/or intervals between blinks, and by triggering alarm 322 to wake up the driver in the event the driver is detected falling asleep. Image processing system 319 receives an image of the face of the driver from sensor 310. The image may be of the complete face of the

SAMSUNG EXHIBIT 1004
Page 43 of 404

driver, or of a selected area of the driver's face that includes at least one eye of the driver. Image processing system 319 is capable of detecting numerous criteria that are associated with blinking eyes. These include any feature of the face that may be used to discern the closing of an eye, including detection of the pupil, retina, white, eyelids, skin adjacent to the eye, and others. The eye may also be detected by detecting either changes in the appearance of the eye when blinking or by detecting motion of the eyelid during blinking.

Referring to Fig. 30, as an initial step, the system of the invention preferably detects the presence of a driver in the driver's seat (402). This may be accomplished in any number of ways, such as by an electrical weight sensor switch in the driver's seat or by interfacing with a signal generated by the vehicle indicating that the vehicle is in use in motion, e.g., a speed sensor, a switch detecting that the vehicle is in gear, a switch detecting that closing of the seat belt, etc. Upon detection of such a signal, the system enters into a search mode for detecting the driver's face or driver's eye(s). Alternatively, since the system is powered by the electrical system of the vehicle, and more preferably by a circuit of the electrical system that is powered only when the vehicle is turned on, the system turns on only when the engine is turned on, and enters into a search mode in which it operates until the face or eye(s) of the driver are detected. Upon detection of a driver in the vehicle (404), a Driver Present flag is set to "1" so that controller 42 is aware of the presence of the driver.

Sub. a33

As an alternative method of detecting the presence of the driver, if sensor 10 is mounted in a manner that enables (or requires) that the sensor be adjusted toward the face of the driver prior to use, e.g., by adjustment of the rear-view mirror shown in Fig. 21, the system may activate an alarm until the sensor has acquired the face of the driver.

Sub. a34

The driver may also be detected by using the image processing system to detect the driver entering the driver's seat. This assumes that the image processing system and sensor 10 are already powered when the driver enters the vehicle, such as by connecting the image processing system and sensor to a circuit of the vehicle electrical system that has constant power. Alternatively, the system may be powered upon detecting the vehicle door open, etc. When the driver enters the driver's seat, the image from sensor

SAMSUNG EXHIBIT 1004
Page 44 of 404

10 will be characterized by many pixels of the image being in motion (DP=1), with CO having a relatively high value, moving in a lateral direction away from the driver's door. The pixels will also have hue characteristics of skin. In this embodiment, in a mode in which the system is trying to detect the presence of the driver, controller 42 sets the validation units to detect movement of the driver into the vehicle by setting the histogram formation units to detect movement characteristic of a driver entering the driver's seat. Most easily, controller 42 may set the validation units to detect DP=1, and analyze the histogram in the histogram formation unit for DP to detect movement indicative of a person entering the vehicle, e.g., NBPTS exceeding a threshold.

Fig. 23 shows the field of view 323 of sensor 310 between directions 323a and 323b where the head T of the driver is within, and is preferably centered in, conical field 323. Field 323 may be kept relatively narrow, given that the movements of the head T of the driver during driving are limited. Limitation of field 23 improves the sensitivity of the system since the driver's face will be represented in the images received from sensor 10 by a greater number of pixels, which improves the histogram formation process discussed below.

In general the number of pixels in motion will depend upon the field of view of the sensor. The ratio of the number of pixels characteristic of a driver moving into the vehicle to the total number of pixels in a frame is a function of the size of the field of vision of the sensor. For a narrow field of view (a smaller angle between 323a and 323b in Fig. 23), a greater number, and possibly more than 50% of the pixels will be "in movement" as the driver enters the vehicle, and the threshold will be greater. For a wide field of view (a greater angle between 323a and 323b in Fig. 23), a smaller number of pixels will be "in movement" as the driver enters the vehicle. The threshold is set corresponding to the particular location and type of sensor, and based upon other characteristics of the particular installation of the system. If NBPTS for the DP histogram exceeds the threshold, the controller has detected the presence of the driver.

As discussed above, other characteristics of the driver entering the vehicle may be detected by the system, including a high CO, hue, direction, etc., in any combinations, as appropriate, to make the system more robust. For example, controller 42 may set the

linear combination units of the direction histogram formation unit to detect pixels moving into the vehicle, may set the linear combination unit for CO to detect high values, and/or may set the linear combination unit for hue to detect hues characteristic of human skin. Controller 42 may then set the validation units to detect DP, CO, hue, and/or direction, as appropriate. The resultant histogram may then be analyzed to determine whether NBPTS exceeds a threshold, which would indicate that the driver has moved into the driver's seat. It is foreseen that characteristics other than NBPTS of the resultant histogram may be used to detect the presence of the driver, e.g., RMAX exceeding a threshold.

When the driver has been detected, i.e., the Driver Present flag has been set to "1", the system detects the face of the driver in the video signal and eliminates from further processing those superfluous portions of the video signal above, below, and to the right and left of the head of the driver. In the image of the drivers head, the edges of the head are detected based upon movements of the head. The edges of the head will normally be characterized by DP=1 due to differences in the luminance of the skin and the background, even due to minimal movements of the head while the head is still. Movement of the head may be further characterized by vertical movement on the top and bottom edges of the head, and left and right movement on the vertical edges of the head. The pixels of the head in movement will also be characterized by a hue corresponding to human skin and relatively slow movement as compared to eyelid movement for example. Controller 42 preferably sets the linear combination unit of DP to detect DP=1 and sets the linear combination unit for direction to detect vertical and horizontal movement only (406). Optionally, the linear combination units for velocity and hue may be set to detect low velocities and human skin hues to make the system more robust. Also, the linear combination unit for CO may be set to eliminate the very fast movements characteristic of eye blinking in order to prevent the eyes from being considered at this stage of processing during which the head is being detected. Finally, controller 42 sets the validation units for DP, direction, and x and y position to be "on" (406). Optionally, the validation units for velocity, hue, and CO may be set "on" if these criteria are being detected.

SAMSUNG EXHIBIT 1004
Page 46 of 404

Sub. A36

As illustrated in Fig. 24, the pixels having the selected characteristics are formed into histograms 324x and 324y along axes O*x* and O*y*, i.e., horizontal and vertical projections, respectively. Slight movements of the head of the driver having the characteristics selected are indicated as ripples 327a, 327b, 327c and 327d, which are shown in line form but which actually extend over a small area surrounding the periphery of the head. Peaks 325a and 325b of histogram 324x, and 325c and 325d of histogram 324y delimit, by their respective coordinates 326a, 326b, 326c and 326d, a frame bounded by straight lines *Ya, Yb, Xc, Xd,* which generally correspond to the area in which the face V of the driver located. Controller 42 reads the histograms 324x and 324y from the histogram formation units, preferably during the blanking interval, and detects the locations of peaks 325a, 325b, 325c and 325d (408). In order to ensure that the head has been identified, the distance between peaks 325a and 325b and between peaks 325b and 325c are preferably tested to fall with a range corresponding to the normal ranges of human head sizes.

Sub. A37

Once the location of coordinates 326a, 326b, 326c and 326d has been established, the area surrounding the face of the driver is masked from further processing (410). Referring to Fig. 25, this is accomplished by having controller 42 set XMIN, XMAX, YMIN and YMAX to correspond to *Xc, Xd, Ya,* and *Yb* respectively. This masks the cross- hatched area surrounding face V from further consideration, which helps to eliminate background movement from affecting the ability of the system to detect the eye(s) of the driver. Thus, for subsequent analysis, only pixels in central area Z, framed by the lines *Xc, Xd, Ya, Yb* and containing face V are considered. As an alternative method of masking the area outside central area Z, controller 42 may set the semi-graphic memory to mask off these areas. As indicated above, the semi-graphic memory may be used to mask off selected pixels of the image in individual or small rectangular groups. Since head V is not rectangular, use of the semi-graphic memory enables better masking around the rounded edges of the face to better eliminate background pixels from further consideration.

The process of detecting the head of the driver and masking background areas is repeated at regular intervals, and preferably once every ten frames or less. It is foreseen

SAMSUNG EXHIBIT 1004
Page 47 of 404

that this process may be repeated every frame, if desired, particularly if more than one set of histogram formation units is available for use. Controller 42 may also compute average values over time for coordinates 326a, 326b, 326c and 326d and use these values to set mask coordinates *Xc, Xd, Ya, Yb*, if desired. This will establish a nearly fixed position for the frame over time.

Once the frame has been established, a Centered-Face flag is set to "1" (412), and controller 42 initiates the process of reducing the frame size to more closely surround the eyes of the driver. Referring to Fig. 26, in which frame Z denotes the area bounded by *Ya, Yb, Xc, Xd* determined in the prior step, controller 42 initially uses the usual anthropomorphic ratio between the zone of the eyes and the entire face for a human being, especially in the vertical direction, to reduce the area under consideration to cover a smaller zone Z' bounded by lines *Y'a, Y'b, X'c* and *X'd* that includes the eyes U of the driver. Thus, the pixels in the outer cross-hatched area of Fig. 27 is eliminated from consideration and only the area within frame Z' is further considered. This is accomplished by having controller 42 set XMIN, XMAX, YMIN and YMAX to correspond *to X'c, X'd, Y'a*, and *Y'b* respectively (414). This masks the pixels in the area outside Z' from further consideration. Thus, for subsequent analysis, only pixels in area Z' containing eyes U are considered. As an alternative method of masking the area outside area Z', controller 42 may set the semi-graphic memory to mask off these areas. It is foreseen that an anthropomorphic ratio may be used to set frame Z' around only a single eye, with detection of blinking being generally the same as described below, but for one eye only.

Once the area Z' is determined using the anthropomorphic ratio, a Rough Eye-Centering flag is set to "1" (416), and controller 42 performs the step of analyzing the pixels within the area Z' to identify movement of the eyelids. Movement of eyelids is characterized by criteria that include high speed vertical movement of pixels with the hue of skin. In general, within the area Z', formation of histograms for DP=1 may be sufficient to detect eyelid movement. This detection may be made more robust by detection of high values of CO, by detection of vertical movement, by detection of high velocity, and by detection of hue. As an alternative to detection of hue, movement of the

SAMSUNG EXHIBIT 1004
Page 48 of 404

pixels of the eye may be detected by detecting pixels with DP=1 that do not have the hue of skin. This will enable detection of changes in the number of pixels associated with the pupil, retina, iris, etc.

Controller 42 sets the linear combination unit for DP to detect DP=1 and sets the validation units for DP, and x and y position to be on (418). Optionally, the linear combination units and validation units may be set to detect other criteria associated with eye movement, such as CO, velocity, and hue. Initially, controller 42 also sets XMIN, XMAX, YMIN and YMAX to correspond *to X'c*, *X'd*, *Y'a*, and *Y'b* respectively. Referring to Fig. 27, a histogram is formed of the selected criteria, which is analyzed by controller 42 (420). If desired, a test is performed to ensure that the eyes have been detected. This test may, for example, consist of ensuring that NBTS in the histogram exceeds a threshold e.g., 20% of the total number of pixels in the frame *Y'a, Y'b, X'c, X'd*. Once the eyes have been detected an Eye-Detected flag is set to "1" (422).

Fig. 27 illustrates histogram 28*x* along axis *Ox* and histogram 28*y* along axis *Oy* of the pixels with the selected criteria corresponding to the driver's eyelids, preferably DP=1 with vertical movement. Controller 42 analyzes the histogram and determines peaks 29a, 29b, 29c and 29d of the histogram. These peaks are used to determine horizontal lines *X"c* and *X"d* and vertical lines *Y"a* and *Y"b* which define an area of movement of the eyelids Z", the movements of the edges of which are indicated at 30a and 30b for one eye and 30c and 30d for the other eye (424). The position of the frame bounded by *Y"a, Y"b, X"c, X"d* is preferably determined and updated by time-averaging the values of peaks 29a, 29b, 29c and 29d, preferably every ten frames or less. Once the eyes have been detected and frame Z" has been established an Eye Centered flag is set to "1" (426) and only pixels within frame Z" are thereafter processed.

Controller 42 then determines the lengths of the eye blinks, and, if applicable, the time interval between successive blinks. Fig. 28 illustrates in a three-dimensional orthogonal coordinate system: OQ, which corresponds to the number of pixels in area Z" having the selected criteria; To, which corresponds to the time interval between successive blinks; and Oz which corresponds to the length of each blink. From this

SAMSUNG EXHIBIT 1004
Page 49 of 404

information, it is possible to determine when a driver is falling asleep. Two successive blinks C1 and C2 are shown on Fig. 28.

Sub. a40

Fig. 29A illustrates on curve C the variation over time of the number of pixels in each frame having the selected criteria, e.g., DP = 1, wherein successive peaks P1, P2, P3 correspond to successive blinks. This information is determined by controller 42 by reading NBPTS of the x and/or y histogram formation units. Alternatively, controller 42 may analyze the x and/or y histograms of the histogram formation units (Fig. 27) to detect peaks 29a and 29b and/or 29c and 29d, which over time will exhibit graph characteristics similar to those shown in Fig. 29A.

Sub. a41

Controller 42 analyzes the data in Fig. 29A over time to determine the location and timing of peaks in the graph (428). This may be done, for example, as shown in Fig. 29B, by converting the graph shown in Fig. 29A into a binary data stream, in which all pixels counts over a threshold are set to "1", and all pixel counts below the threshold are set to "0" (vertical dashes 31), in order to convert peaks P1, P2, P3 to framed rectangles R1, R2 R3, respectively. Finally, Fig. 29B shows the lengths of each blink (5, 6, and 5 frames respectively for blinks P1, P2 and P3) and the time intervals (14 and 17 frames for the intervals between blinks P1 and P2, and P2 and P3 respectively). This information is determined by controller 42 through an analysis of the peak data over time.

Finally, controller 42 calculates the lengths of successive eye blinks and the interval between successive blinks (430). If the length of the blinks exceeds a threshold, e.g., 350 ms, a flag is set to "1" indicating that the blink threshold has been exceeded. If the time interval between successive blinks is found to vary significantly over time, a flag is set to "1" indicting a variable intervals between blinks. Upon setting the first flag, which indicates that the driver is blinking at a rate indicative of falling asleep, controller 42 triggers alarm 322 for waking up the driver. The second flag may be used either to generate an alarm in the same manner as with the first flag, or to reinforce the first flag to, for example, increase the alarm sound level.

Sub. a42

Figs. 31 - 36 show an alternative method by which the generic image processing system may be used to detect a driver falling asleep. Initially, controller 42 is placed in a search mode (350), in which controller 42 is scans the image to detect one or more

SAMSUNG EXHIBIT 1004
Page 50 of 404

characteristics of the face, and preferably the nostrils of the nose. Nostrils are generally shadowed, and as such are usually defined by low luminance. Referring to Fig. 31, the area of the image is broken up into a number of sub-images 352, in this case six, labelled A-F, which are sequentially analyzed by controller 42 to locate the nostrils. As shown, each of the sub-images 352 preferably overlaps each adjacent sub-image by an amount 353 equal to at least the normal combined width of the nostrils and the spacing therebetween to minimize the likelihood of missing the nostrils while in the search mode.

Controller 42 sets XMIN, XMAX, YMIN, and YMAX to correspond to the first sub-image A (354). Controller 42 then sets the registers 106 in the luminance linear combination unit to detect low luminance levels (356). The actual luminance level selected will vary depending upon various factors, such as ambient lighting, time of day, weather conditions, etc. Keeping in mind that controller 42 is able to access the histogram calculated for luminance from histogram formation unit 24, controller 42 may use a threshold or other desired technique to select the desired luminances to search for the nostrils, e.g., selecting the lowest 15% of luminance values for consideration, and may adapt the threshold as desired. Controller 42 also sets the validation units for luminance and x and y histogram on (358), thereby causing x and y histograms to be formed of the selected low luminance levels. Controller 42 then analyzes the x and y direction histograms to identify characteristics indicative of the nostrils, as discussed below (360). If nostrils are not identified (362), controller 42 repeats this process on the next sub-image, i.e., sub-image B, and each subsequent sub-image, until nostrils are identified, repeating the process starting with sub-image A if required. Each sub-image is analyzed by controller 42 in a single frame. Accordingly, the nostrils may generally be acquired by the system in less than six frames. It is foreseen that additional sub-images may be used, if desired. It is also foreseen that the area in which the sub-images are searched may restricted to an area in which the nostrils are most likely to be present, either as determined from past operation of the system, or by use of an anthropomorphic model. For example, the outline of the head of the driver may be determined as described above, and the nostril search may then be restricted to a small sub- area of the

SAMSUNG EXHIBIT 1004
Page 51 of 404

image. It is also foreseen that the entire image may be search at once for the nostrils, if desired.

While the invention is being described with respect to identification of the nostrils as a starting point to locating the eyes, it is foreseen that any other facial characteristic, e.g., the nose, ears, eyebrows, mouth, etc., and combinations thereof, may be detected as a starting point for locating the eyes. These characteristics may be discerned from any characteristics capable of being searched by the system, including CO, DP, velocity, direction, luminance, hue and saturation. It is also foreseen that the system may locate the eyes directly, e.g., by simply searching the entire image for DP=1 with vertical movement (or any other searchable characteristics of the eye), without the need for using another facial criteria as a starting point. In order to provide a detailed view of the eye while enabling detection of the head or other facial characteristic of the driver, it is foreseen that separate sensors may be used for each purpose.

Fig. 32 shows sample x and y histograms of a sub-image in which the nostrils are located. Nostrils are characterized by a peak 370 in the y-direction histogram, and two peaks 372 and 374 in the x-direction histogram. Confirmation that the nostrils have been identified may be accomplished in several ways. First, the histograms are analyzed to ensure that the characteristics of each histogram meets certain conditions. For example, NBPTS in each histogram should exceed a threshold associated with the normal number of pixels detectable for nostrils. Also, RMAX in the y histogram, and each peak of the x histogram should exceed a similar threshold. Second, the distance between nostrils d is fairly constant. The x histogram is analyzed by controller 42 and d is measured to ensure that it falls within a desired range. Finally, the width of a nostril is also fairly constant, although subject to variation due to shadowing effects. Each of the x and y histograms is analyzed by controller 42 to ensure that the dimensions of each nostril fall within a desired range. If the nostrils are found by controller 42 to meet these criteria, the nostrils have been acquired and the search mode is ended. If the nostrils have not been acquired, the search mode is continued. Once the nostrils are acquired, the x position of the center of the face (position $d/2$ within the sub- image under consideration) is

SAMSUNG EXHIBIT 1004
Page 52 of 404

determined, as is the y location of the nostrils in the image (POSRMAX of the y histogram) (364).

In the present example, only a single eye is analyzed to determine when the driver is falling asleep. In this case the shadow of the eye in the open and closed positions is used to determine from the shape of the shadow whether the eye is open or closed. As discussed above, for night-time applications, the invention is preferably used in combination with a short-wave IR light source. For the presently described example, the IR light source is preferably positioned above the driver at a position to cast a shadow having a shape capable of detected by the system. The anthropomorphic model is preferably adaptive to motion, to features of the driver, and to angular changes of the driver relative to the sensor.

Referring to Fig. 32, having determined the location of the nostrils 272 of the driver having a center position X_N, Y_N, a search box 276 is established around an eye 274 of the driver (366). The location of search box 276 is set using an anthropomorphic model, wherein the spatial relationship between the eyes and nose of humans is known. Controller 42 sets XMIN, XMAX, YMIN, and YMAX to search within the area defined by search box 276. Controller 42 further sets the luminance and x and y direction histograms to be on, with the linear combination unit for luminance set to detect low histogram levels relative to the rest of the image, e.g., the lowest 15% of the luminance levels (368). As a confirmation of the detection of the nostrils or other facial feature being detected, search box 276, which is established around an eye 274 of the driver using an anthropomorphic model, may be analyzed for characteristics indicative of an eye present in the search box. These characteristics may include, for example, a moving eyelid, a pupil, iris or cornea, a shape corresponding to an eye, a shadow corresponding to an eye, or any other indica indicative of an eye. Controller 42 sets the histogram formation units to detect the desired criteria. For example, Fig. 36 shows a sample histogram of a pupil 432, in which the linear combination units and validation units are set to detect pixels with very low luminance levels and high gloss that are characteristic of a pupil. The pupil may be verified by comparing the shapes of the x and y histograms to known characteristics of the pupil, which are generally symmetrical, keeping in mind

SAMSUNG EXHIBIT 1004
Page 53 of 404

that the symmetry may be affected by the angular relationship between the sensor and the head of the driver.

Upon detection of the desired secondary facial criteria, identification of the nostrils is confirmed and detection of eye openings and closings is initiated. Alternatively, the criteria being detected to confirm identification of the nostrils may be eye blinking using the technique described below. If no blinking is detected in the search box, the search mode is reinitiated.

Blinking of the eye is detected during a tracking mode 400. In the tracking mode controller 42 sets XMIN, XMAX, YMIN, and YMAX to search within the area defined by search box 276. Controller 42 further sets the luminance and x and y direction histograms to be on, with the linear combination unit for luminance set to detect low histogram levels relative to the rest of the image, e.g., the lowest 15% of the luminance levels (368), in order to detect shadowing of the eye. During the tracking mode, the system monitors the location of nostrils 272 to detect movement of the head. Upon detected movement of the head, and a resultant shift in the position of X_N, Y_N, search box 276 is shifted according to the anthropomorphic model to retain the search box over the eye of the driver.

Fig. 33 shows the shapes of the x and y histograms 376, 378 with the eye open, and Fig. 34 shows the shapes of the x and y histograms 380, 382 with the eye closed. The shapes of the shadows, and especially the shape of the shadow with the eye closed will vary depending upon the location of the camera and the location of the light source creating the shadow, e.g., the sun or the IR light source. In any case, the width MAX_x - MIN_x and the height MAX_y - MIN_y of each histogram will generally be significantly greater for an open eye than for a closed eye. Controller 42 analyzes the width and height of each histogram to determine when the eye is open and when it is closed (382). An open eye may be determined by any number of characteristics of the x and y histograms, including width MAX_x - MIN_x and height MAX_y - MIN_y exceeding thresholds, NBPTS of each histogram exceeding a threshold, RMAX of each histogram exceeding a threshold, change in position of POSRMAX as compared to a closed eye, etc. Similarly, a closed eye may be determined by any number of characteristics of the x

SAMSUNG EXHIBIT 1004
Page 54 of 404

and y histograms, including width MAX_x - MIN_x and height MAX_y - MIN_y being below thresholds, NBPTS of each histogram being below a threshold, RMAX of each histogram being below a threshold, change in position of POSRMAX as compared to an open eye, etc., In a preferred embodiment, controller 42 calculates the width MAX_x - MIN_x and height MAX_y - MIN_y of each histogram and utilizes thresholds to determine whether the eye is open or closed. If each width MAX_x - MIN_x and height MAX_y - MIN_y exceed thresholds, the eye is determined to be open. If each of width MAX_x - MIN_x and height MAX_y - MIN_y fall below thresholds (which may be different from the thresholds used to determine an open eye), the eye is determined to be closed (384). MAX and MIN are preferably the MAX and MIN calculated in the histogram formation units. On the other hand, MAX and MIN may be other thresholds, e.g., the points on the histograms corresponding to RMAX/2 or some other threshold relative to RMAX.

Controller 42 analyzes the number of frames the eye is open and closed over time to determine the duration of each blink and/or the interval between blinks (386). Using this information, controller 42 determines whether the driver is drowsy (388). Upon determining that the driver is drowsy, controller 42 generates an alarm to awaken the driver (390) or another signal indicative that the driver is sleeping.

Controller 42 constantly adapts operation of the system, especially in varying lighting levels. Controller 42 may detect varying lighting conditions by periodically monitoring the luminance histogram and adapting the gain bias of the sensor to maintain as broad a luminance spectrum as possible. Controller 42 may also adjust the thresholds that are used to determine shadowing, etc. to better distinguish eye and nostril shadowing from noise, e.g. shadowing on the side of the nose, and may also adjust the sensor gain to minimize this effect. If desired controller 42 may cause the histogram formation units to form a histogram of the iris. This histogram may also be monitored for consistency, and the various thresholds used in the system adjusted as necessary.

It will be appreciated that while the invention has been described with respect to detection of the eyes of a driver using certain criteria, the invention is capable of detecting any criteria of the eyes using any possible measurable characteristics of the pixels, and that the characteristics of a driver falling asleep may be discerned from any other information in the histograms formed by the invention. Also, while the invention

SAMSUNG EXHIBIT 1004
Page 55 of 404

has been described with respect to detecting driver drowsiness, it is applicable to any application in which drowsiness is to be detected. More generally, although the present invention has been described with respect to certain embodiments and examples, variations exist that are within the scope of the invention as described in the following claims.

50

SAMSUNG EXHIBIT 1004
Page 56 of 404

CLAIMS

1. A process of detecting a person falling asleep, the process comprising the steps of:

acquiring an image of the face of the person;

selecting pixels of the image having characteristics corresponding to characteristics of at least one eye of the person;

forming at least one histogram of the selected pixels;

analyzing the at least one histogram over time to identify each opening and closing of the eye; and

determining from the opening and closing information on the eye, characteristics indicative of a person falling asleep.

2. The process according to claim 1 further comprising the step of identifying a sub-area of the image comprising the at least one eye prior to the step of selecting pixels of the image having characteristics corresponding to characteristics of at least one eye, and wherein the step of selecting pixels of the image having characteristics corresponding to characteristics of at least one eye comprises selecting pixels within the sub-area of the image.

3. The process according to claim 2 wherein the step of identifying a sub- area of the image comprising the at least one eye comprises the steps of:

identifying the head of the person in the image; and

identifying the sub-area of the image using an anthropomorphic model.

4. The process according to claim 3 wherein the step of identifying head of the person in the image comprises the steps of:

selecting pixels of the image having characteristics corresponding to edges of the head of the person;

forming histograms of the selected pixels projected onto orthogonal axes; and

analyzing the histograms of the selected pixels to identify the edges of the head of the person.

SAMSUNG EXHIBIT 1004
Page 57 of 404

5. The process according to claim 2 wherein the step of identifying a sub- area of the image comprising the at least one eye comprises the steps of:

identifying the location of a facial characteristic of the person in the image; and

identifying the sub-area of the image using an anthropomorphic model and the location of the facial characteristic.

6. The process according to claim 5 wherein the step of identifying the location of a facial characteristic of the person in the image comprises the steps of:

selecting pixels of the image having characteristics corresponding to the facial characteristic;

forming histograms of the selected pixels projected onto orthogonal axes; and

analyzing the histograms of the selected pixels to identify the position of the facial characteristic in the image.

7. The process according to claim 6 wherein the facial characteristic is the nostrils of the person, and wherein the step of selecting pixels of the image having characteristics corresponding to the facial characteristic comprises selecting pixels having low luminance levels.

8. The process according to claim 7 further comprising the step of analyzing the histograms of the nostril pixels to determine whether the spacing between the nostrils is within a desired range and whether the dimensions of the nostrils fall within a desired range.

9. The process according to claim 1 wherein:

the step of selecting pixels of the image having characteristics corresponding to characteristics of at least one eye of the person comprises selecting pixels having low luminance levels corresponding to shadowing of the eye; and

wherein the step analyzing the at least one histogram over time to identify each opening and closing of the eye comprises analyzing the shape of the eye shadowing to determine openings and closings of the eye.

SAMSUNG EXHIBIT 1004
Page 58 of 404

10. The process according to claim 9 wherein the step of forming at least one histogram of the selected pixels comprises forming histograms of shadowed pixels of the eye projected onto orthogonal axes, and wherein the step of analyzing the shape of the eye shadowing comprises analyzing the width and height of the shadowing.

11. The process according to claim 1 wherein:

the step of selecting pixels of the image having characteristics corresponding to characteristics of at least one eye of the person comprises selecting pixels in movement corresponding to blinking; and

wherein the step analyzing the at least one histogram over time to identify each opening and closing of the eye comprises analyzing the number of pixels in movement over time to determine openings and closings of the eye.

12. The process according to claim 11 wherein the step of selecting pixels of the image having characteristics corresponding to characteristics of at least one eye of the person comprises selecting having characteristics selected from the group consisting of i) DP=1, ii) CO indicative of a blinking eyelid, iii) velocity indicative of a blinking eyelid, and iv) up and down movement indicative of a blinking eyelid.

13. The process according to claim 5 wherein the step of identifying a facial characteristic of the person in the image comprises the step of searching sub-images of the image to identify the facial characteristic.

14. The process according to claim 7 wherein the step of identifying a facial characteristic of the person in the image comprises the step of searching sub-images of the image to identify the nostrils.

15. The process according to claim 13 wherein the facial characteristic is a first facial characteristic and further comprising the steps of:

using an anthropomorphic model and the location of the first facial characteristic to select a sub-area of the image containing a second facial characteristic;

selecting pixels of the image having characteristics corresponding to the second facial characteristic; and

analyzing the histograms of the selected pixels of the second facial characteristic to confirm the identification of the first facial characteristic.

SAMSUNG EXHIBIT 1004
Page 59 of 404

16. An apparatus for detecting a person falling asleep, the apparatus comprising:

a sensor for acquiring an image of the face of the person, the image comprising pixels corresponding to the eye of the person;

a controller; and

a histogram formation unit for forming a histogram on pixels having selected characteristics,

the controller controlling the histogram formation unit to select pixels of the image having characteristics corresponding to characteristics of at least one eye of the person and to form a histogram of the selected pixels, the controller analyzing the histogram over time to identify each opening and closing of the eye, and determining from the opening and closing information on the eye, characteristics indicative of a person falling asleep.

17. The apparatus according to claim 16 wherein the controller interacts with the histogram formation unit to identify a sub-area of the image comprising the at least one eye, and the controller controls the histogram formation unit to select pixels of the image having characteristics corresponding to characteristics of at least one eye only within the sub-area of the image.

18. The apparatus according to claim 17 wherein:

the controller interacts with the histogram formation unit to identify the head of the person in the image; and

the controller identifies the sub-area of the image using an anthropomorphic model.

19. The apparatus according to claim 18 wherein:

the histogram formation unit selects pixels of the image having characteristics corresponding to edges of the head of the person and forms histograms of the selected pixels projected onto orthogonal axes; and

the controller analyzes the histograms of the selected pixels to identify the edges of the head of the person.

20. The apparatus according to claim 17 wherein:

SAMSUNG EXHIBIT 1004
Page 60 of 404

the controller interacts with the histogram formation unit to identify the location of a facial characteristic of the person in the image; and

the controller identifies the sub-area of the image using an anthropomorphic model and the location of the facial characteristic.

21. The apparatus according to claim 20 wherein:

the histogram formation unit selects pixels of the image having characteristics corresponding to the facial characteristic and forms histograms of the selected pixels projected onto orthogonal axes;

the controller analyzes the histograms of the selected pixels to identify the position of the facial characteristic in the image.

22. The apparatus according to claim 21 wherein the facial characteristic is the nostrils of the person, and wherein the histogram formation unit selects pixels of the image having low luminance levels corresponding to the luminance level of the nostrils.

23. The apparatus according to claim 22 wherein the controller analyzes the histograms of the nostril pixels to determine whether the spacing between the nostrils is within a desired range and whether the dimensions of the nostrils fall within a desired range.

24. The apparatus according to claim 16 wherein:

the histogram formation unit selects pixels of the image having low luminance levels corresponding to shadowing of the eye; and

wherein the controller analyzes the shape of the eye shadowing to determine openings and closings of the eye.

25. The apparatus according to claim 24 wherein histogram formation unit forms histograms of shadowed pixels of the eye projected onto orthogonal axes, and wherein the controller analyzes the width and height of the shadowing to determine openings and closings of the eye.

26. The apparatus according to claim 16 wherein:

the histogram formation unit selects pixels of the image in movement corresponding to blinking; and

SAMSUNG EXHIBIT 1004
Page 61 of 404

the controller analyzes the number of pixels in movement over time to determine openings and closings of the eye.

27. The apparatus according to claim 26 wherein the histogram formation units selects pixels of the image having characteristics of movement corresponding to blinking, such characteristics being selected from the group consisting of i) DP=1, ii) CO indicative of a blinking eyelid, iii) velocity indicative of a blinking eyelid, and iv) up and down movement indicative of a blinking eyelid.

28. The apparatus according to claim 20 wherein the controller interacts with the histogram formation unit to search sub-images of the image to identify the facial characteristic.

29. The apparatus according to claim 22 wherein the controller interacts with the histogram formation unit to search sub-images of the image to identify the nostrils.

30. The apparatus according to claim 28 wherein the facial characteristic is a first facial characteristic and further comprising:

the controller using an anthropomorphic model and the location of the first facial characteristic to cause the histogram formation unit to select a sub-area of the image containing a second facial characteristic, the histogram formation unit selecting pixels of the image in the sub-area having characteristics corresponding to the second facial characteristic and forming a histogram of such pixels; and

the controller analyzing the histogram of the selected pixels corresponding to the second facial characteristic to confirm the identification of the first facial characteristic.

31. The apparatus according to claim 16 wherein the sensor is integrally constructed with the controller and the histogram formation unit.

32. The apparatus according to claim 16 further comprising an alarm, the controller operating the alarm upon detection of the person falling asleep.

33. The apparatus according to claim 16 further comprising an illumination source, the sensor being adapted to view the person when illuminated by the illumination source.

SAMSUNG EXHIBIT 1004
Page 62 of 404

34. The apparatus according to claim 33 wherein the illumination source is a source of IR radiation.

35. A rear-view mirror assembly for a vehicle which comprises:

a rear-view mirror; and

the apparatus according to claim 16 mounted to the rear-view mirror.

36. The rear-view mirror assembly according to claim 35 further comprising a bracket attaching the apparatus to the rear-view mirror.

37. The rear-view mirror assembly according to claim 35 further comprising a housing having an open side and an interior, the rear-view mirror being mounted to the open side of the housing, the rear view mirror being see-through from the interior of the housing to an exterior of the housing, the apparatus being mounted interior to the housing with the sensor directed toward the rear-view mirror.

38. The rear-view mirror assembly according to claim 37 further comprising a joint attaching the apparatus to the rear-view mirror assembly, the joint adapted to maintain the apparatus in a position facing a driver of the vehicle during adjustment of the mirror assembly by the driver.

39. The rear-view mirror assembly according to claim 35 further comprising a source of illumination directed toward the person, the sensor being adapted to view the person when illuminated by the source of illumination.

40. The rear-view mirror assembly according to claim 35 further comprising an alarm, the controller operating the alarm upon detection of the person falling asleep.

41. A rear-view mirror assembly which comprises:

a rear-view mirror; and

the apparatus according to claim 16, the sensor being mounted to the rear-view mirror, the controller and the histogram formation unit being located remote from the sensor.

42. A vehicle comprising the apparatus according to claim 16.

43. A process of detecting a feature of an eye, the process comprising the steps of:

SAMSUNG EXHIBIT 1004
Page 63 of 404

acquiring an image of the face of the person, the image comprising pixels corresponding to the feature to be detected;

selecting pixels of the image having characteristics corresponding to the feature to be detected;

forming at least one histogram of the selected pixels;

analyzing the at least one histogram over time to identify characteristics indicative of the feature to be detected.

44. The process according to claim 43 wherein the feature is the iris, pupil or cornea.

45. An apparatus for detecting a feature of an eye, the apparatus comprising:

a sensor for acquiring an image of the eye, the image comprising pixels corresponding to the feature to be detected;

a controller; and

a histogram formation unit for forming a histogram on pixels having selected characteristics,

the controller controlling the histogram formation unit to select pixels of the image having characteristics corresponding to characteristics of at least one eye of the person and to form a histogram of the selected pixels, the controller analyzing the histogram over time to identify each opening and closing of the eye, and determining from the opening and closing information on the eye, characteristics indicative of a person falling asleep.

SAMSUNG EXHIBIT 1004
Page 64 of 404

CLAIMS

Sub. a45

1. A process of detecting a person falling asleep, the process comprising the steps of:

acquiring an image of the face (V) of the person;

selecting pixels of the image having characteristics corresponding to characteristics of at least one eye of the person;

forming at least one histogram (328x) of the selected pixels;

analyzing the at least one histogram (328x) over time to identify each opening and closing of the eye; and

determining from the opening and closing information on the eye, characteristics indicative of a person falling asleep;

identifying a sub-area of the image comprising the at least one eye prior to the step of selecting pixels of the image having characteristics corresponding to characteristics of at least one eye, this step of selecting pixels comprising selecting pixels within the sub-area of the image, comprising the steps of:

identifying the head of the person in the image; and

identifying the sub-area of the image using an anthropomorphic model.

2. The process according to claim 1 wherein the step of identifying head of the person in the image comprises the steps of:

selecting pixels of the image having characteristics corresponding to edges of the head of the person;

forming histograms (328x, 328y) of the selected pixels projected onto orthogonal axes; and

analyzing the histograms of the selected pixels to identify the edges of the head of the person.

3. The process of detecting a person falling asleep, the process

PCT/EP-99/00300
048 J PCT 361
January 11, 2000

comprising the steps of:

acquiring an image of the face V of the person;

selecting pixels of the image having characteristics corresponding to characteristics of at least one eye of the person;

forming at least one histogram (328x) of the selected pixels;

analyzing the at least one histogram over time to identify each opening and closing of the eye; and

determining from the opening and closing information on the eye, characteristics indicative of a person falling asleep;

identifying a sub-area of the image comprising the at least one eye prior to the step of selecting pixels of the image having characteristics corresponding to characteristics of at least one eye, and wherein the step of selecting pixels of the image having characteristics corresponding to characteristics of at least one eye comprises selecting pixels within the sub-area of the image;

identifying the location of a facial characteristic of the person in the image; and

identifying the sub-area of the image using an anthropomorphic model and the location of the facial characteristic.

4. The process according to claim 3 wherein the step of identifying the location of a facial characteristic of the person in the image comprises the steps of:

selecting pixels of the image having characteristics corresponding to the facial characteristic;

forming histograms of the selected pixels projected onto orthogonal axes; and

analyzing the histograms of the selected pixels to identify the position of the facial characteristic in the image.

5. The process according to claim 4 wherein the facial characteristic is the nostrils of the person, and wherein the step of selecting pixels of the image having characteristics corresponding to the facial characteristic comprises selecting

SAMSUNG EXHIBIT 1004
Page 66 of 404

pixels having low luminance levels.

6. The process according to claim 5 further comprising the step of analyzing the histograms of the nostril pixels to determine whether the spacing between the nostrils is within a desired range and whether the dimensions of the nostrils fall within a desired range.

Sub. a46

7. The process of detecting a person falling asleep, the process comprising the steps of:

acquiring an image of the face (V) of the person;

selecting pixels of the image having characteristics corresponding to characteristics of at least one eye of the person;

forming at least one histogram (328x) of the selected pixels;

analyzing the at least one histogram over time to identify each opening and closing of the eye; and

determining from the opening and closing information on the eye, characteristics indicative of a person falling asleep;

the step of selecting pixels of the image having characteristics corresponding to characteristics of at least one eye of the person comprises selecting pixels having low luminance levels corresponding to shadowing of the eye; and

wherein the step analyzing the at least one histogram over time to identify each opening and closing of the eye comprises analyzing the shape of the eye shadowing to determine openings and closings of the eye.

11 8. The process according to claim 10 7 wherein the step of forming at least one histogram of the selected pixels comprises forming histograms of shadowed pixels of the eye projected onto orthogonal axes, and wherein the step of analyzing the shape of the eye shadowing comprises analyzing the width and height of the shadowing.

Sub. a47

9. The process of detecting a person falling asleep, the process comprising the steps of:

SAMSUNG EXHIBIT 1004
Page 67 of 404

acquiring an image of the face V of the person;

selecting pixels of the image having characteristics corresponding to characteristics of at least one eye of the person;

forming at least one histogram (328x) of the selected pixels;

analyzing the at least one histogram over time to identify each opening and closing of the eye; and

determining from the opening and closing information on the eye, characteristics indicative of a person falling asleep;

the step of selecting pixels of the image having characteristics corresponding to characteristics of at least one eye of the person comprises selecting pixels in movement corresponding to blinking; and

wherein the step analyzing the at least one histogram over time to identify each opening and closing of the eye comprises analyzing the number of pixels in movement over time to determine openings and closings of the eye.

10. The process according to claim 9 wherein the step of selecting pixels of the image having characteristics corresponding to characteristics of at least one eye of the person comprises selecting having characteristics selected from the group consisting of i) DP=1, ii) CO indicative of a blinking eyelid, iii) velocity indicative of a blinking eyelid, and iv) up and down movement indicative of a blinking eyelid.

11. The process according to claim 3 wherein the step of identifying a facial characteristic of the person in the image comprises the step of searching sub-images of the image to identify the facial characteristic.

12. The process according to claim 5 wherein the step of identifying a facial characteristic of the person in the image comprises the step of searching sub-images of the image to identify the nostrils.

9 ~~13~~. The process according to claim ~~11~~ 8 wherein the facial characteristic is a first facial characteristic and further comprising the steps of:

using an anthropomorphic model and the location of the first facial

SA

characteristic to select a sub-area of the image containing a second facial characteristic;

selecting pixels of the image having characteristics corresponding to the second facial characteristic; and

analyzing the histograms of the selected pixels of the second facial characteristic to confirm the identification of the first facial characteristic.

14. An apparatus for detecting a person falling asleep, the apparatus comprising:

a sensor for acquiring an image of the face of the person, the image comprising pixels corresponding to the eye of the person;

a controller; and

a histogram formation unit for forming a histogram on pixels having selected characteristics,

the controller controlling the histogram formation unit to select pixels of the image having characteristics corresponding to characteristics of at least one eye of the person and to form a histogram of the selected pixels, the controller analyzing the histogram over time to identify each opening and closing of the eye, and determining from the opening and closing information on the eye, characteristics indicative of a person falling asleep;

the controller interacting with the histogram formation unit to identify a sub-area of the image comprising the at least one eye, and the controller controls the histogram formation unit to select pixels of the image having characteristics corresponding to characteristics of at least one eye only within the sub-area of the image;

the controller interacting with the histogram formation unit to identify the head of the person in the image; and

the controller identifies the sub-area of the image using an anthropomorphic model.

15. The apparatus according to claim 14 wherein:

the histogram formation unit selects pixels of the image having characteristics corresponding to edges of the head of the person and forms histograms of the selected pixels projected onto orthogonal axes; and

the controller analyzes the histograms of the selected pixels to identify the edges of the head of the person.

16. The apparatus according to claim 14 wherein:

the controller interacts with the histogram formation unit to identify the location of a facial characteristic of the person in the image; and

the controller identifies the sub-area of the image using an anthropomorphic model and the location of the facial characteristic.

17. The apparatus according to claim 16 wherein:

the histogram formation unit selects pixels of the image having characteristics corresponding to the facial characteristic and forms histograms of the selected pixels projected onto orthogonal axes;

the controller analyzes the histograms of the selected pixels to identify the position of the facial characteristic in the image.

18. The apparatus according to claim 17 wherein the facial characteristic is the nostrils of the person, and wherein the histogram formation unit selects pixels of the image having low luminance levels corresponding to the luminance level of the nostrils.

19. The apparatus according to claim 18 wherein the controller analyzes the histograms of the nostril pixels to determine whether the spacing between the nostrils is within a desired range and whether the dimensions of the nostrils fall within a desired range.

23 20. The apparatus according to claim 14 wherein:

the histogram formation unit selects pixels of the image having low luminance levels corresponding to shadowing of the eye; and

wherein the controller analyzes the shape of the eye shadowing to determine openings and closings of the eye.

SAMSUNG EXHIBIT 1004
Page 70 of 404

24 21. The apparatus according to claim 23 wherein histogram formation unit forms histograms of shadowed pixels of the eye projected onto orthogonal axes, and wherein the controller analyzes the width and height of the shadowing to determine openings and closings of the eye.

25 22. The apparatus according to claim 14 wherein:

the histogram formation unit selects pixels of the image in movement corresponding to blinking; and

the controller analyzes the number of pixels in movement over time to determine openings and closings of the eye.

Sub. a48

23. The apparatus according to claim 22 wherein the histogram formation units selects pixels of the image having characteristics of movement corresponding to blinking, such characteristics being selected from the group consisting of i) DP=1, ii) CO indicative of a blinking eyelid, iii) velocity indicative of a blinking eyelid, and iv) up and down movement indicative of a blinking eyelid.

21 24. The apparatus according to claim 16 wherein the controller interacts with the histogram formation unit to search sub-images of the image to identify the facial characteristic.

20 25. The apparatus according to claim 18 wherein the controller interacts with the histogram formation unit to search sub-images of the image to identify the nostrils.

22 26. The apparatus according to claim 21 wherein the facial characteristic is a first facial characteristic and further comprising:

the controller using an anthropomorphic model and the location of the first facial characteristic to cause the histogram formation unit to select a sub-area of the image containing a second facial characteristic, the histogram formation unit selecting pixels of the image in the sub-area having characteristics corresponding to the second facial characteristic and forming a histogram of such pixels; and

the controller analyzing the histogram of the selected pixels

57

SAMSUNG EXHIBIT 1004
Page 71 of 404

corresponding to the second facial characteristic to confirm the identification of the first facial characteristic.

27 21. The apparatus according to claim 14 wherein the sensor is integrally constructed with the controller and the histogram formation unit.

28. The apparatus according to claim 14 further comprising an alarm, the controller operating the alarm upon detection of the person falling asleep.

29. The apparatus according to claim 14 further comprising an illumination source, the sensor being adapted to view the person when illuminated by the illumination source.

30. The apparatus according to claim 29 wherein the illumination source is a source of IR radiation.

31. A rear-view mirror assembly for a vehicle which comprises:

a rear-view mirror; and

the apparatus according to claim 14 mounted to the rear-view mirror.

32. The rear-view mirror assembly according to claim 31 further comprising a bracket attaching the apparatus to the rear-view mirror.

33. The rear-view mirror assembly according to claim 31 further comprising a housing having an open side and an interior, the rear-view mirror being mounted to the open side of the housing, the rear view mirror being see-through from the interior of the housing to an exterior of the housing, the apparatus being mounted interior to the housing with the sensor directed toward the rear-view mirror.

34. The rear-view mirror assembly according to claim 33 further comprising a joint attaching the apparatus to the rear-view mirror assembly, the joint adapted to maintain the apparatus in a position facing a driver of the vehicle during adjustment of the mirror assembly by the driver.

35. The rear-view mirror assembly according to claim 31 further comprising a source of illumination directed toward the person, the sensor being

SAMSUNG EXHIBIT 1004
Page 72 of 404

adapted to view the person when illuminated by the source of illumination.

36. The rear-view mirror assembly according to claim 31 further comprising an alarm, the controller operating the alarm upon detection of the person falling asleep.

37. A rear-view mirror assembly which comprises:

a rear-view mirror; and

the apparatus according to claim 14, the sensor being mounted to the rear-view mirror, the controller and the histogram formation unit being located remote from the sensor.

38. A vehicle comprising the apparatus according to claim 14.

39. A process of detecting a feature of an eye, the process comprising the steps of:

acquiring an image of the face of the person, the image comprising pixels corresponding to the feature to be detected;

selecting pixels of the image having characteristics corresponding to the feature to be detected;

forming at least one histogram of the selected pixels;

analyzing the at least one histogram over time to identify characteristics indicative of the feature to be detected.

said feature being the iris, pupil or cornea.

09/600390

(54) Title: METHOD AND APPARATUS FOR DETECTION OF DROWSINESS

(57) Abstract

In a process of detecting a person falling asleep, an image of the face of the person is acquired. Pixels of the image having characteristics corresponding to an eye of the person are selected and a histogram is formed of the selected pixels. The histogram is analyzed over time to identify each opening and closing of the eye, and characteristics indicative of the person falling asleep are determined. A sub-area of the image including the eye may be determined by identifying the head or a facial characteristic of the person, and then identifying the sub-area using an anthropomorphic model. To determine openings and closings of the eyes, histograms of shadowed pixels of the eye are analyzed to determine the width and height of the shadowing, or histograms of movement corresponding to blinking are analyzed. An apparatus for detecting a person falling asleep includes a sensor for acquiring an image of the face of the person, a controller, and a histogram formation unit for forming a histogram on pixels having selected characteristics. Also disclosed is a rear-view mirror assembly incorporating the apparatus.

copied from front page of PCT pub.
TM
11-24-03

SAMSUNG EXHIBIT 1004
Page 74 of 404

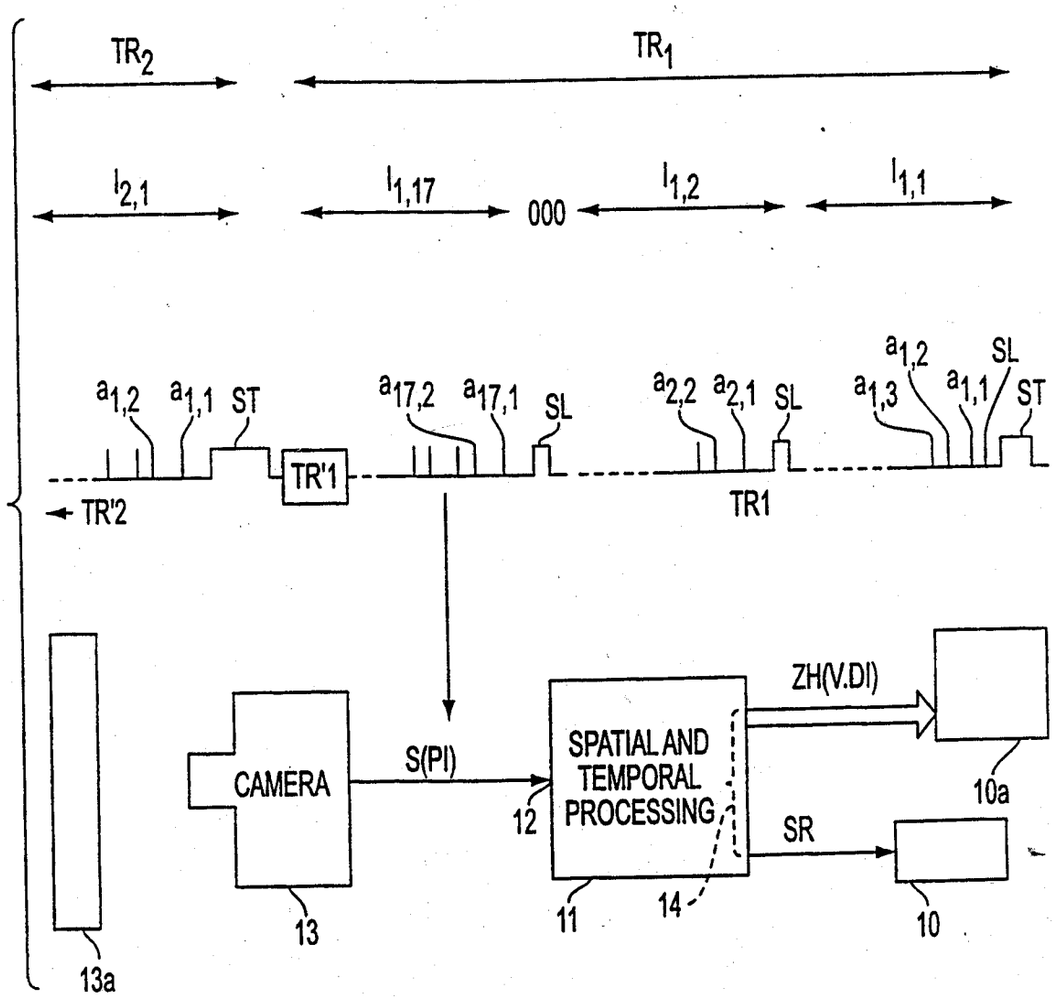

FIG. 1

SAMSUNG EXHIBIT 1004
Page 75 of 404

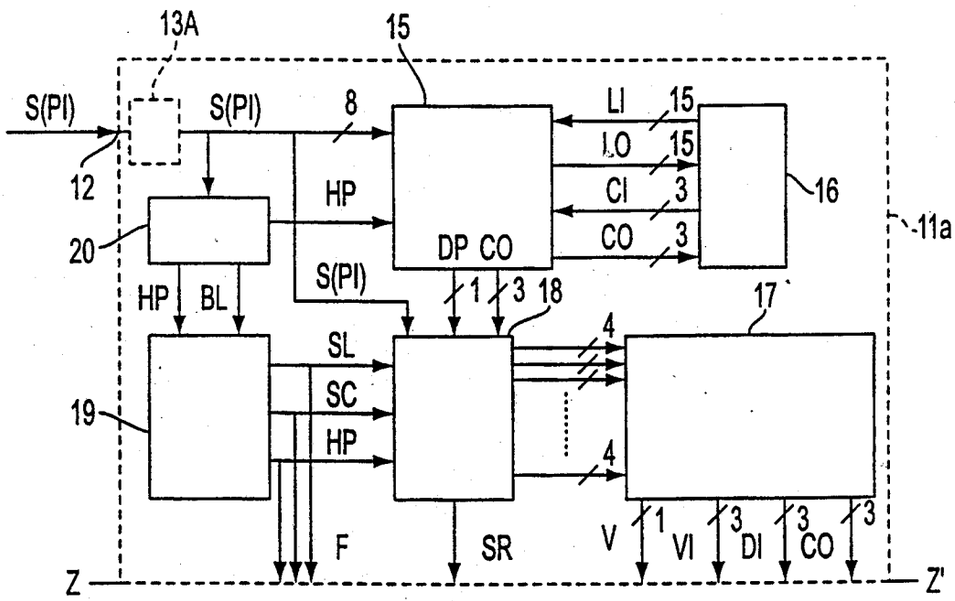
13A
15
S(PI)
S(PI)
8
LI
15
LO
15
CI
3
CO
3
16
12
HP
20
DP CO
11a
HP
BL
S(PI)
1
3
18
17
4
SL
SC
HP
19
4
F
SR
V
1
VI
3
DI
3
CO
3
Z
Z'

FIG. 2

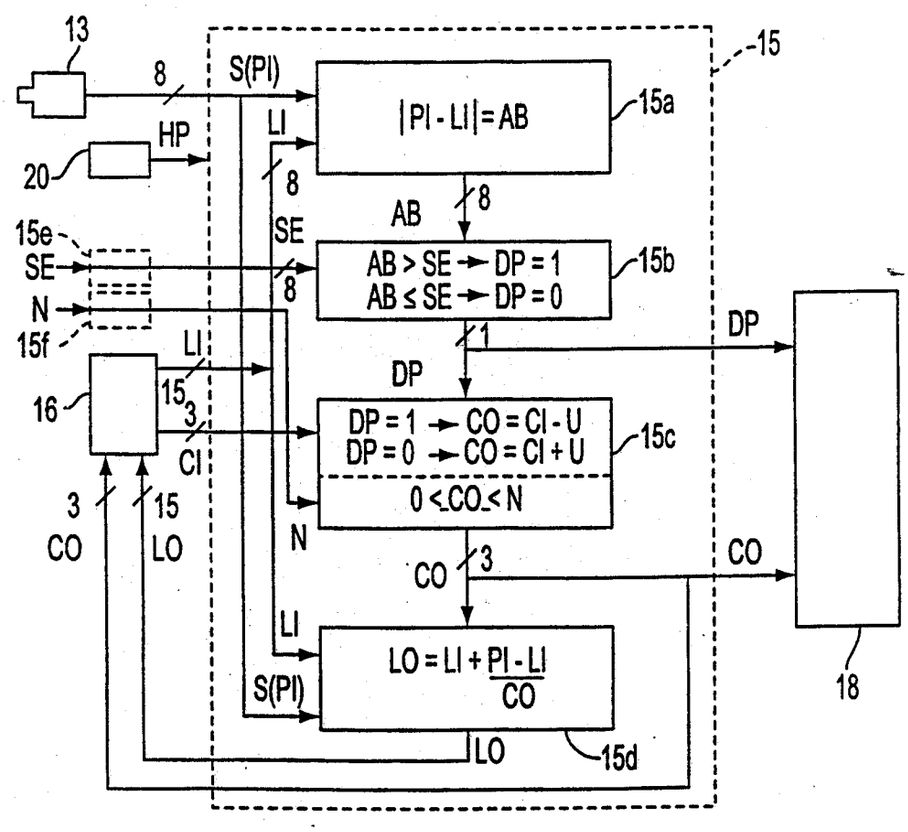
13
15
8
S(PI)
|PI - LI| = AB
15a
HP
20
LI
8
AB
8
15e
SE
SE
AB > SE → DP = 1
AB ≤ SE → DP = 0
15b
8
N
15f
1
DP
DP
LI
16
15
3
DP = 1 → CO = CI - U
DP = 0 → CO = CI + U
15c
CI
0 ≤ CO ≤ N
3
CO
15
LO
N
CO
3
CO
LI
LO = LI + PI - LI / CO
S(PI)
18
LO
15d

FIG. 3

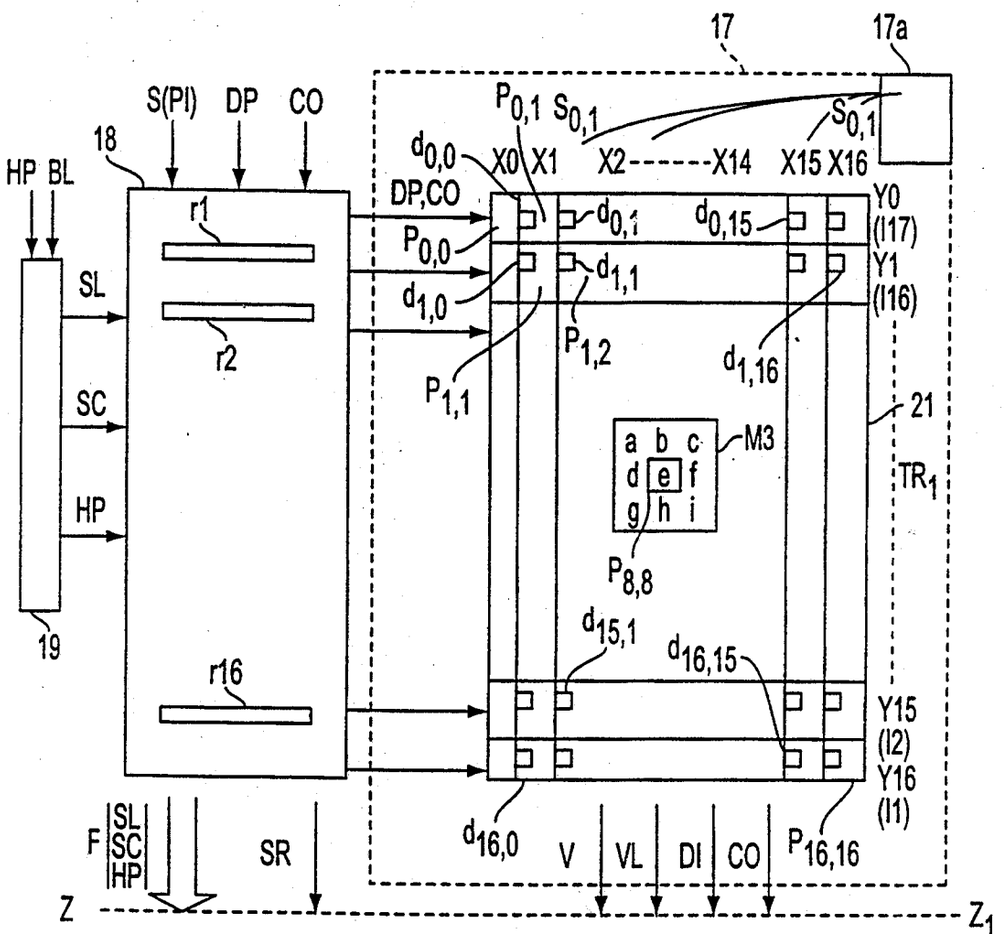

FIG. 4

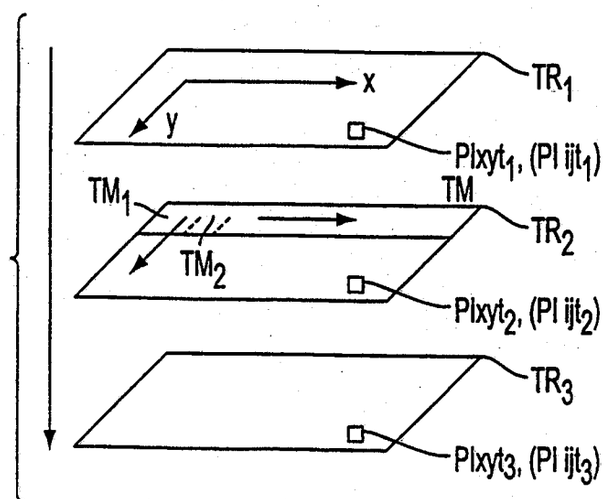

FIG. 5

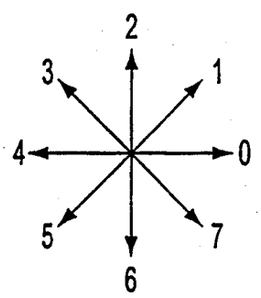

FIG. 6

SAMSUNG EXHIBIT 1004
Page 77 of 404

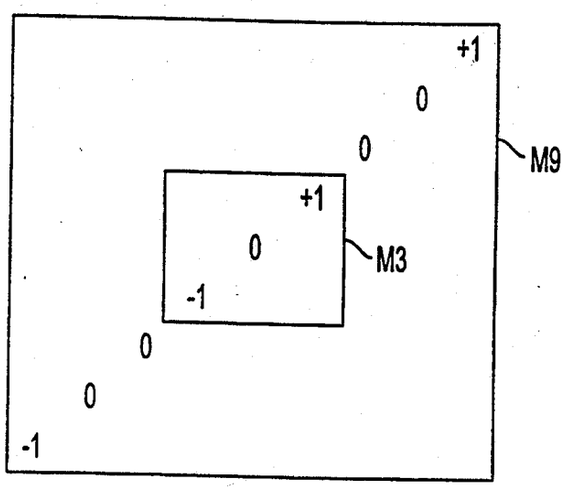

FIG. 7

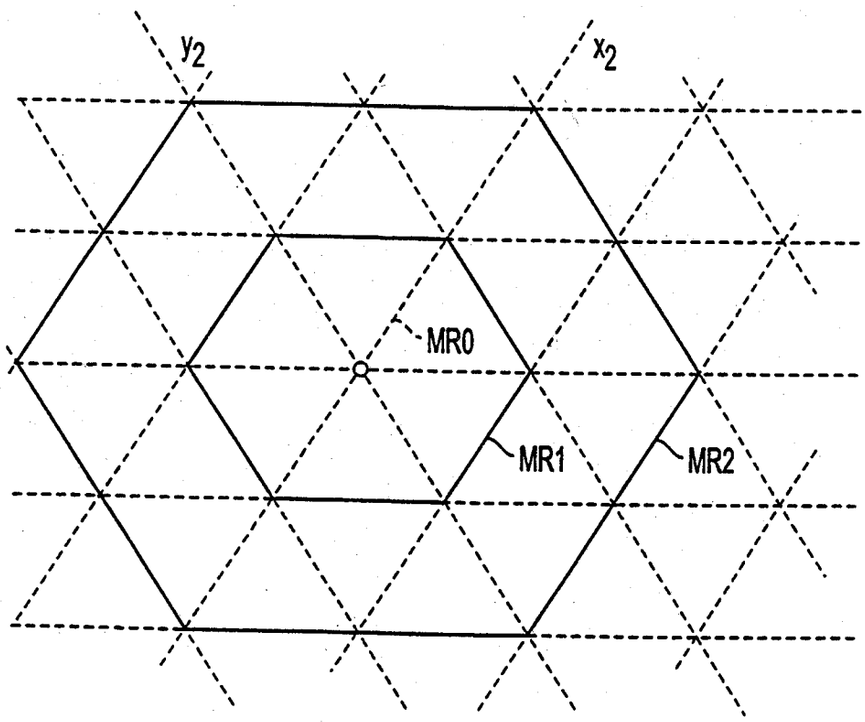

FIG. 8

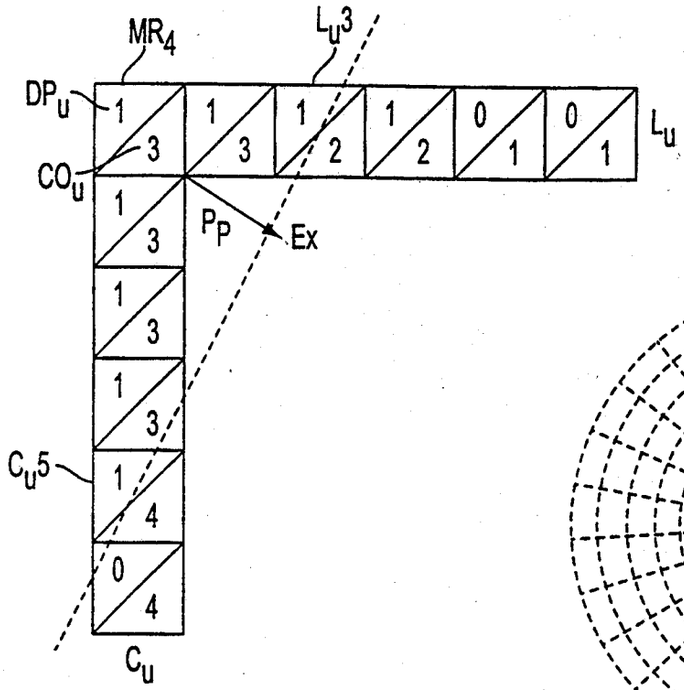

FIG. 9

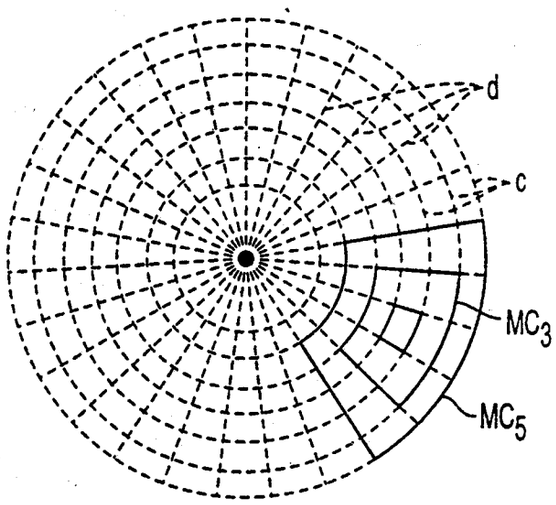

FIG. 10

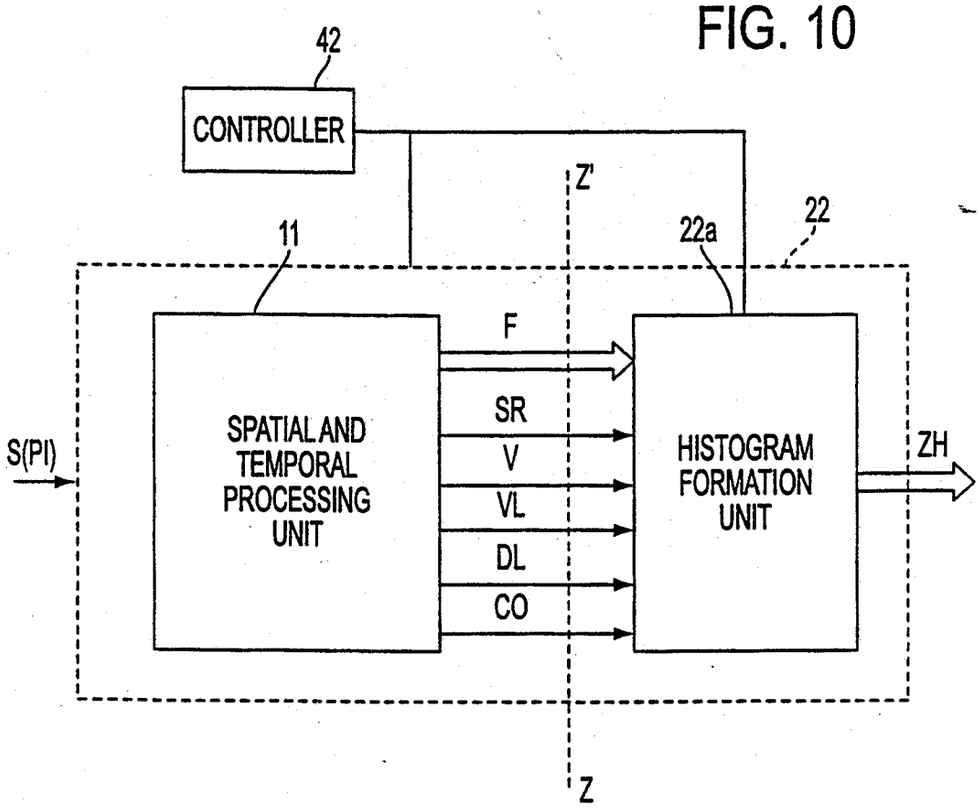

SAMSUNG EXHIBIT 1004
Page 79 of 404

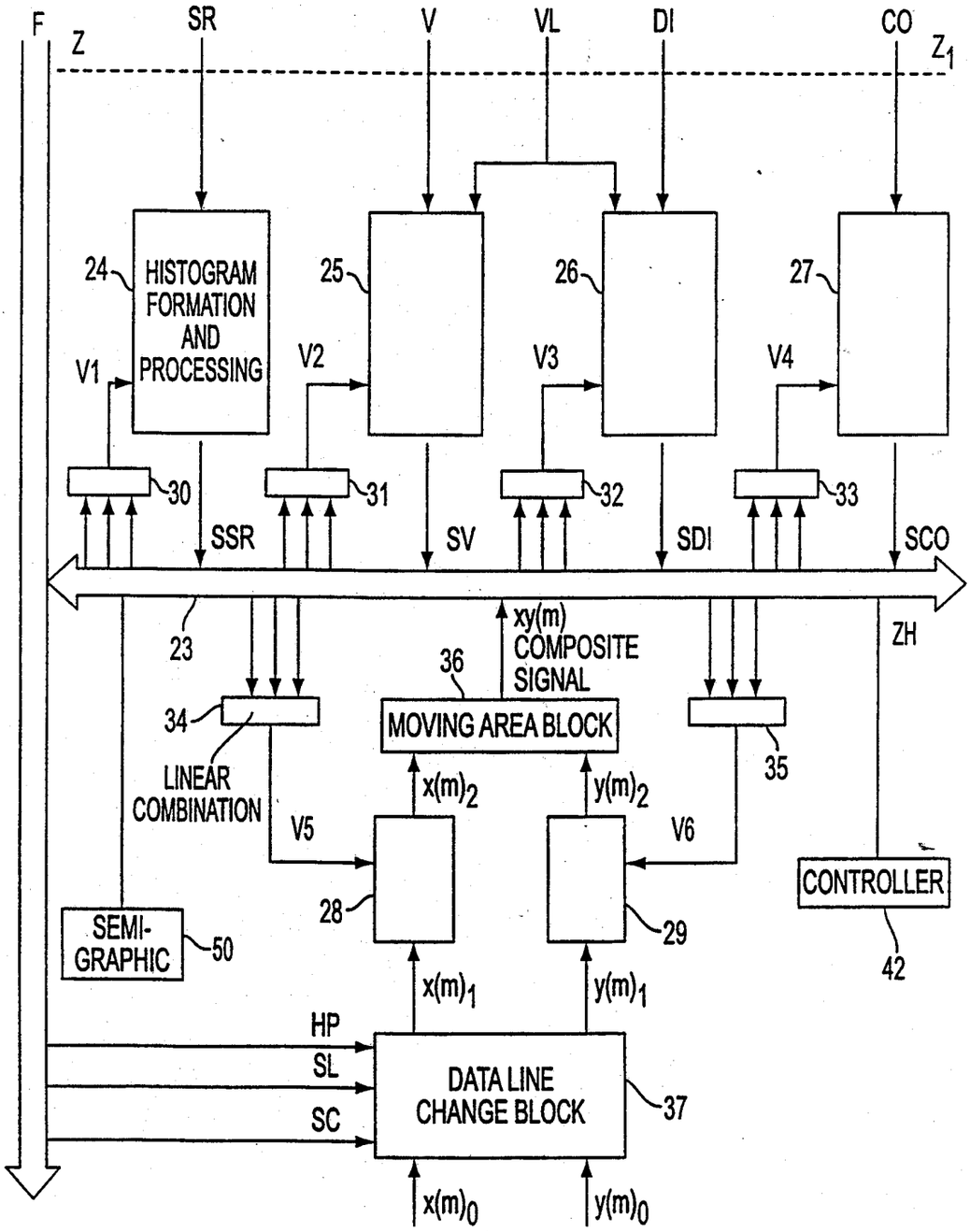

FIG. 12

SAMSUNG EXHIBIT 1004
Page 80 of 404

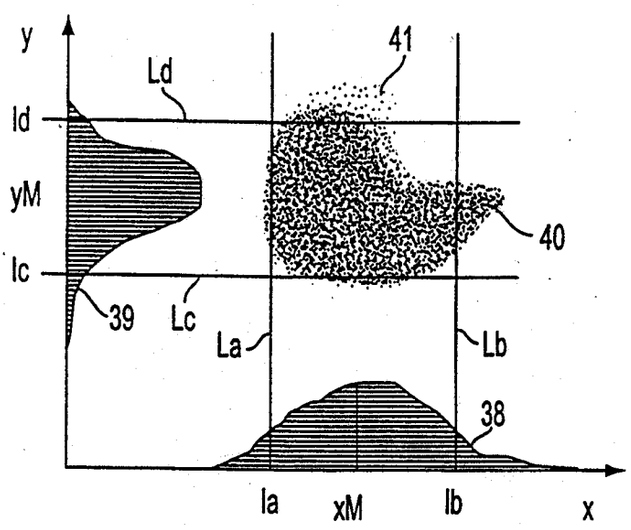

FIG. 13

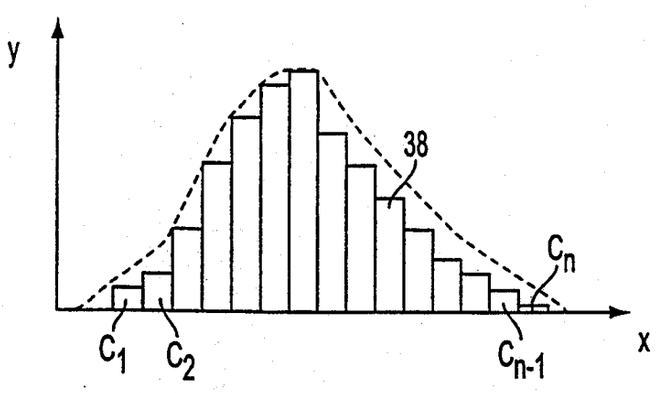

FIG. 16

SAMSUNG EXHIBIT 1004
Page 81 of 404

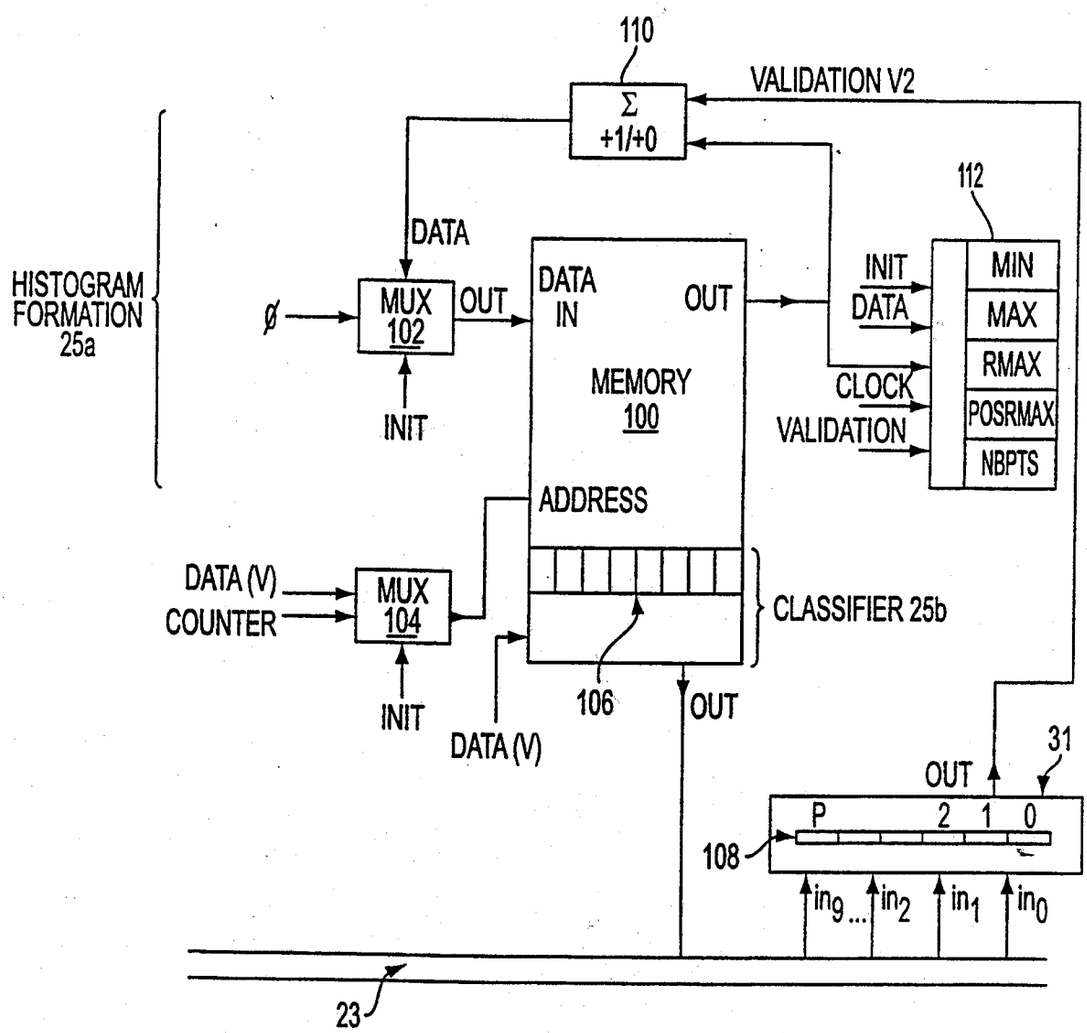

FIG. 14

SAMSUNG EXHIBIT 1004
Page 82 of 404

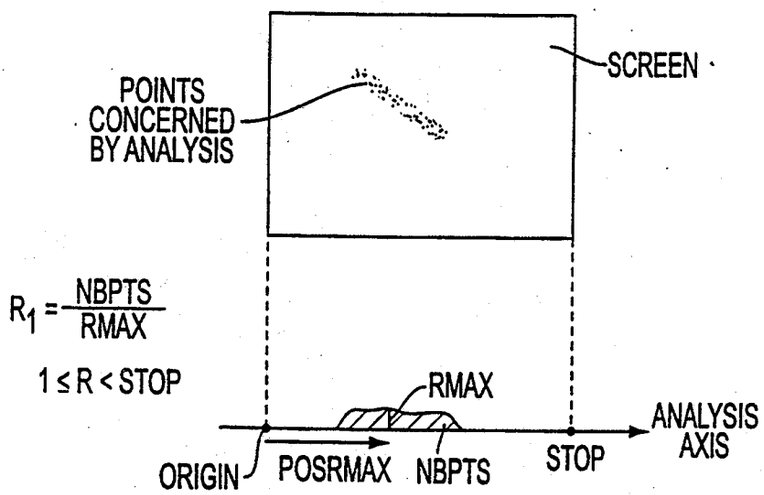

FIG. 15A

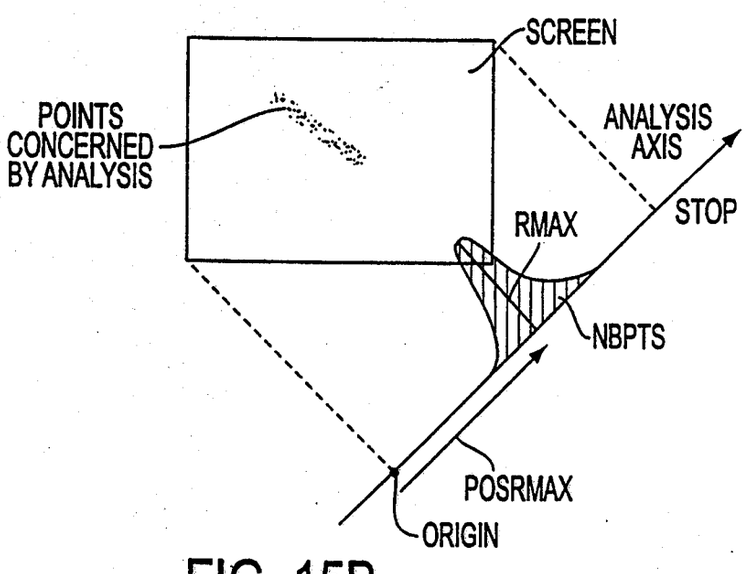

FIG. 15B

09/600390

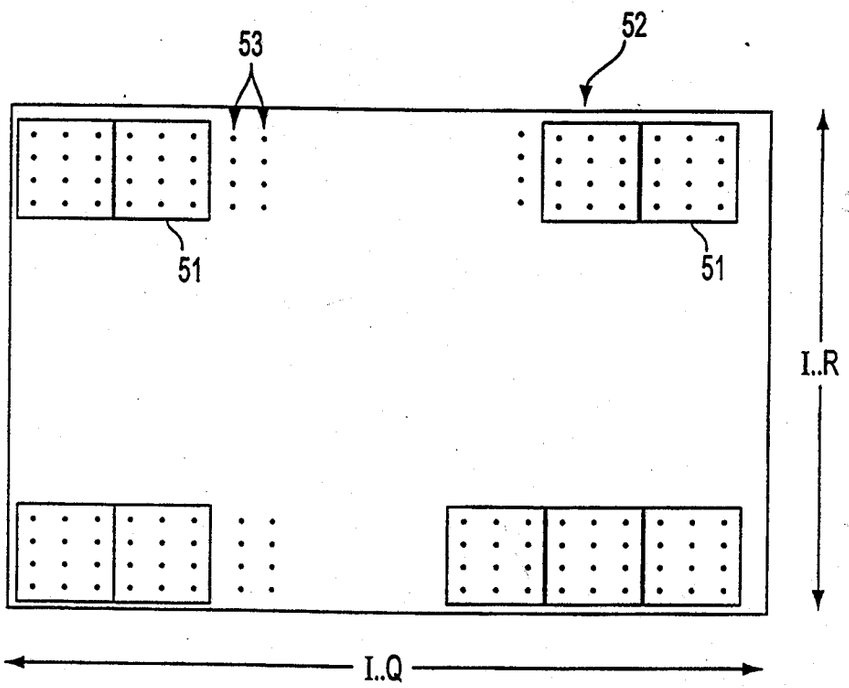

FIG. 17

SAMSUNG EXHIBIT 1004
Page 84 of 404

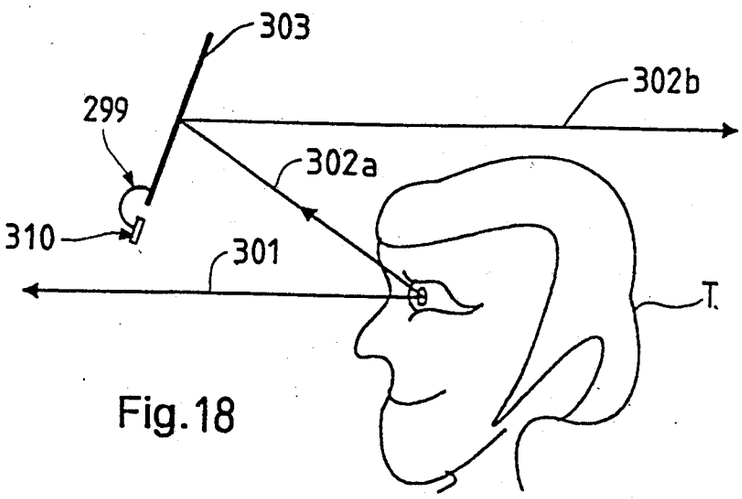

Fig.18

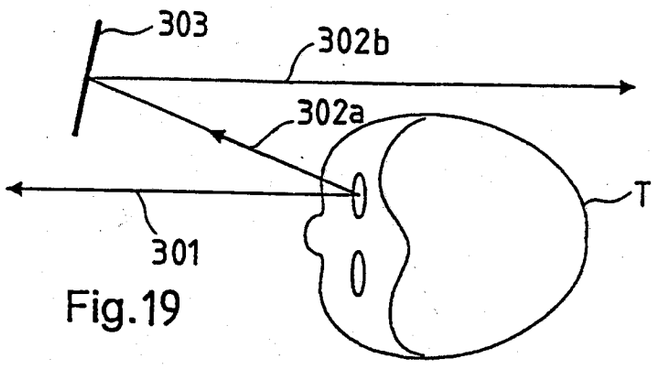

Fig.19

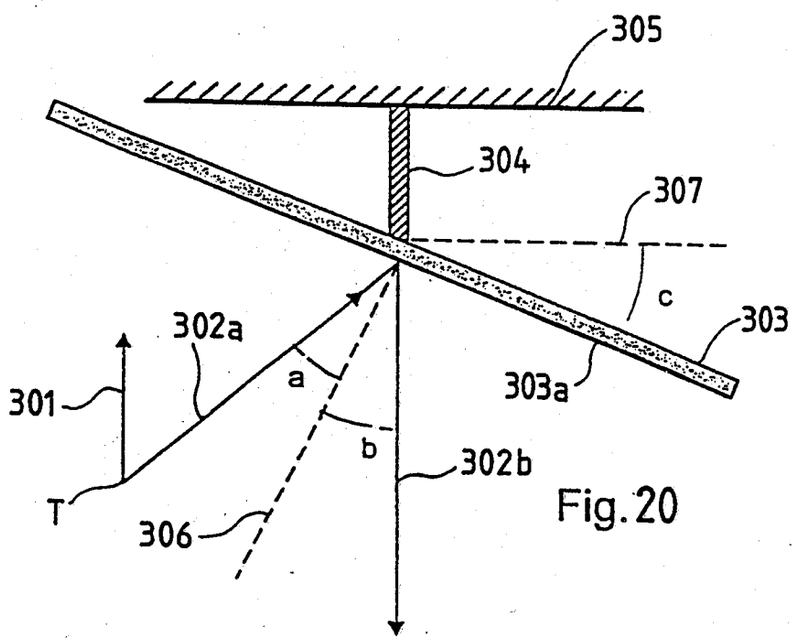

Fig.20

SAMSUNG EXHIBIT 1004
Page 85 of 404

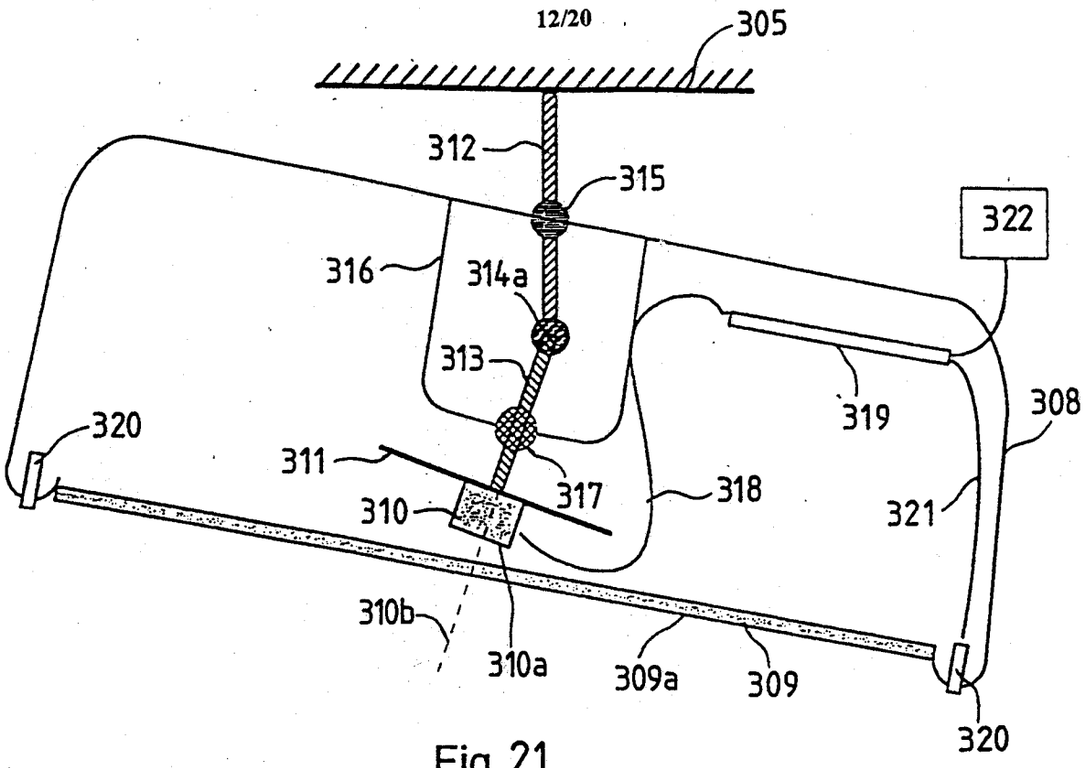

Fig. 21

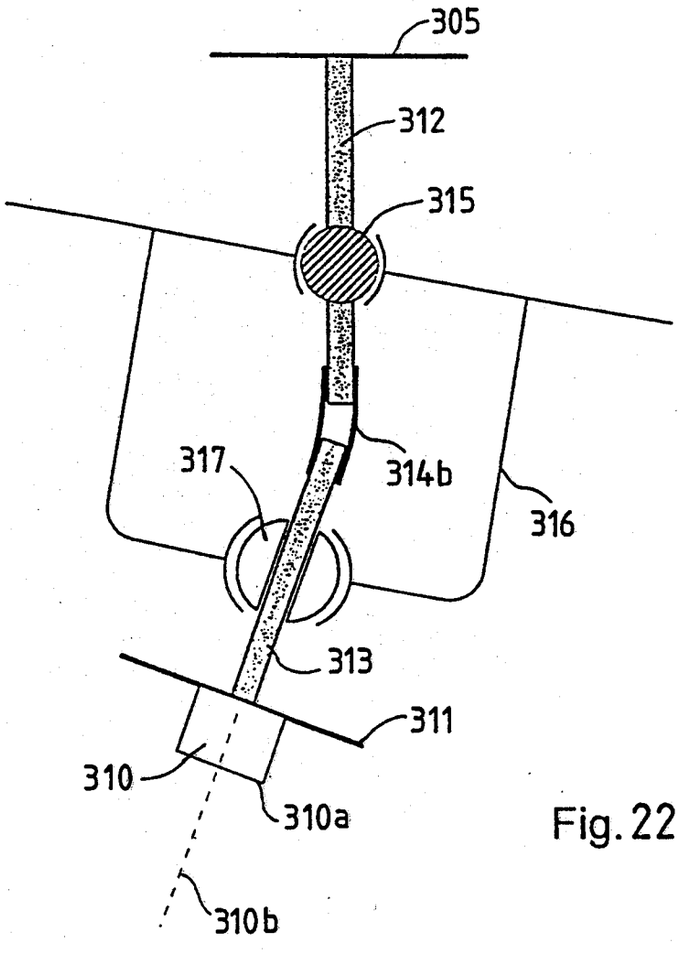

Fig. 22

SAMSUNG EXHIBIT 1004
Page 86 of 404

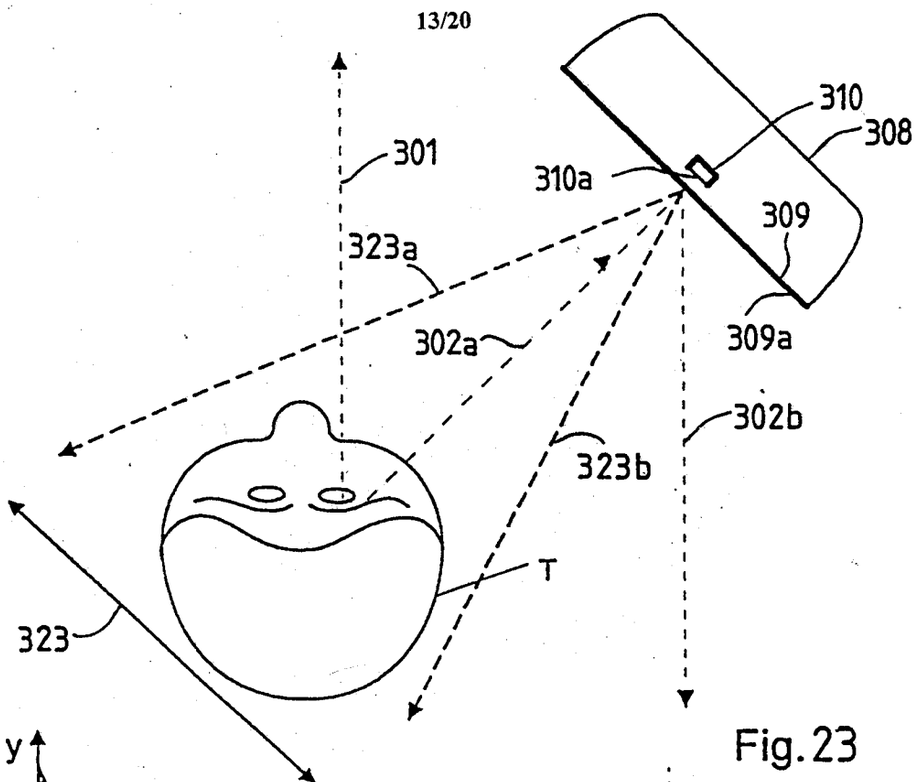

Fig. 23

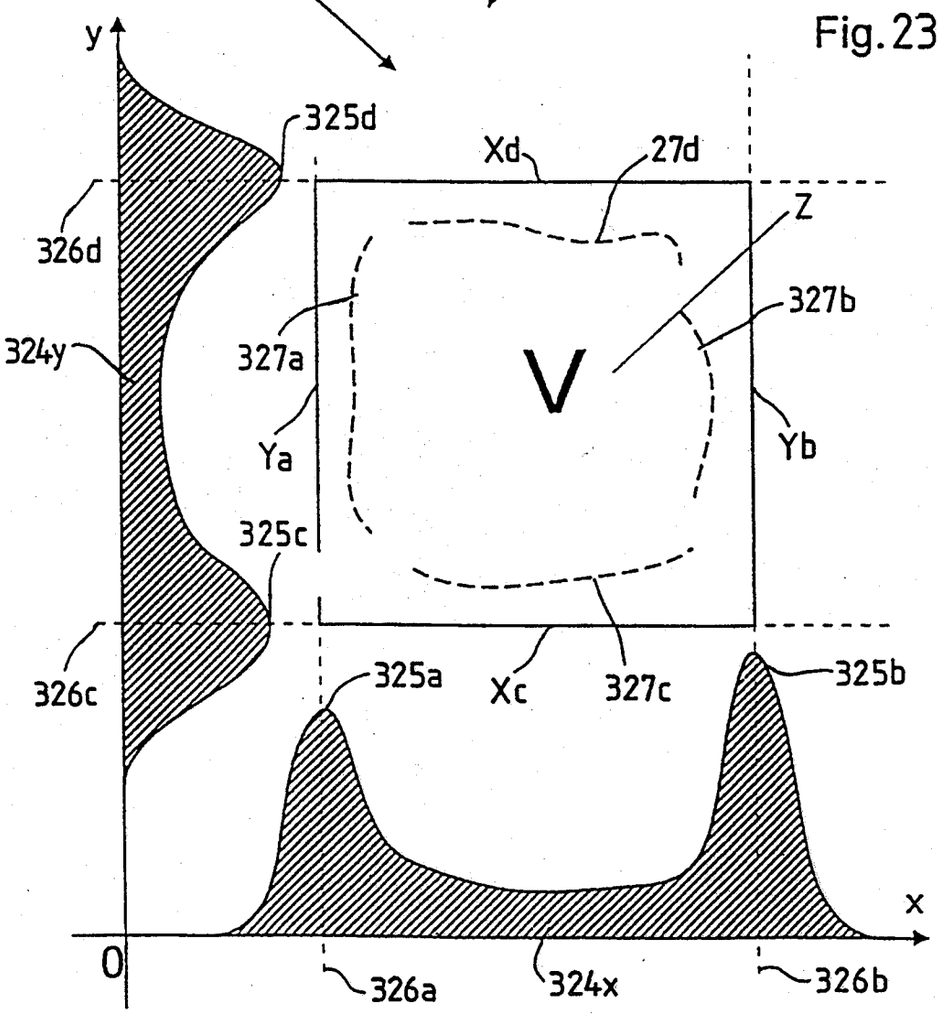

Fig. 24

SAMSUNG EXHIBIT 1004
Page 87 of 404

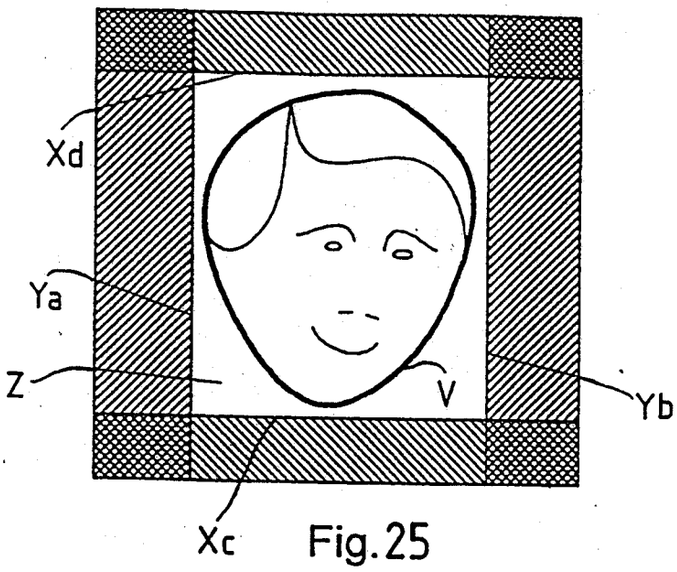

Fig.25

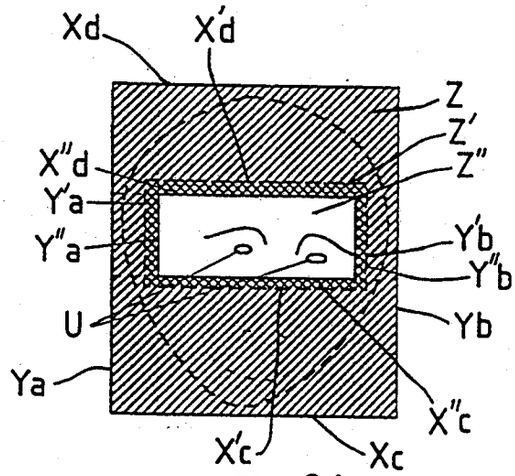

Fig.26

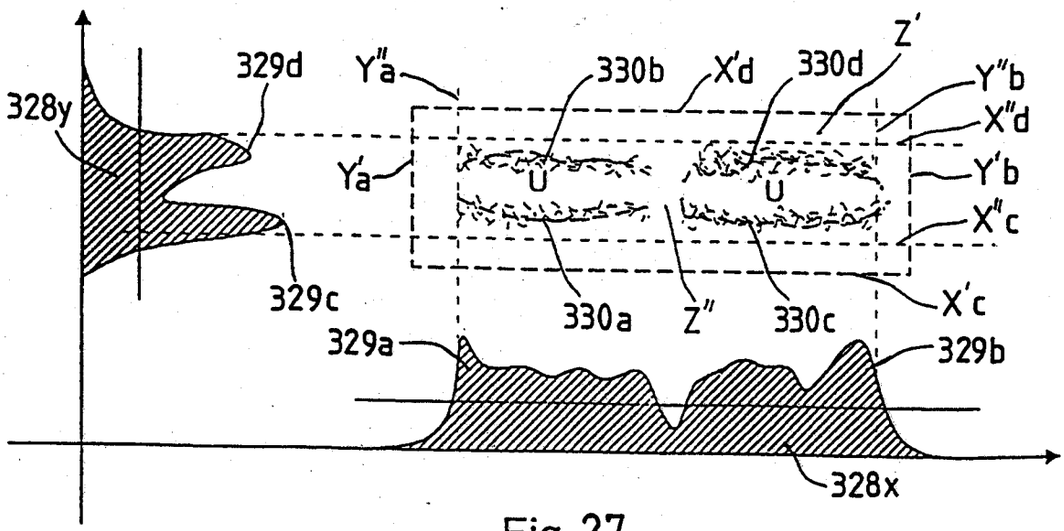

Fig.27

SAMSUNG EXHIBIT 1004
Page 88 of 404

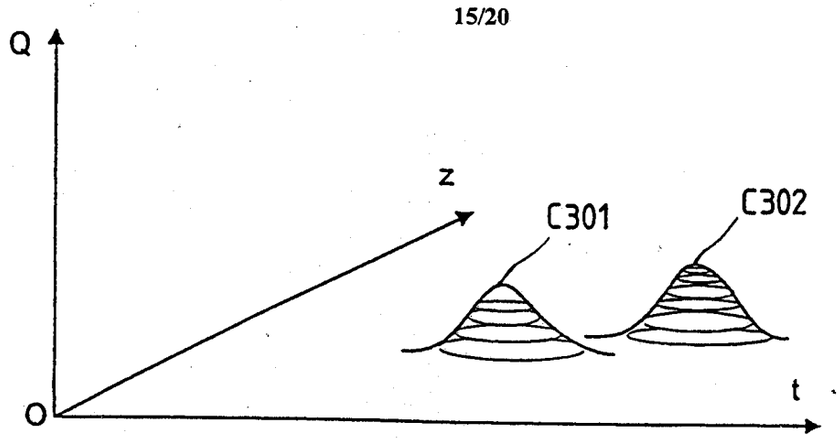

Fig. 28

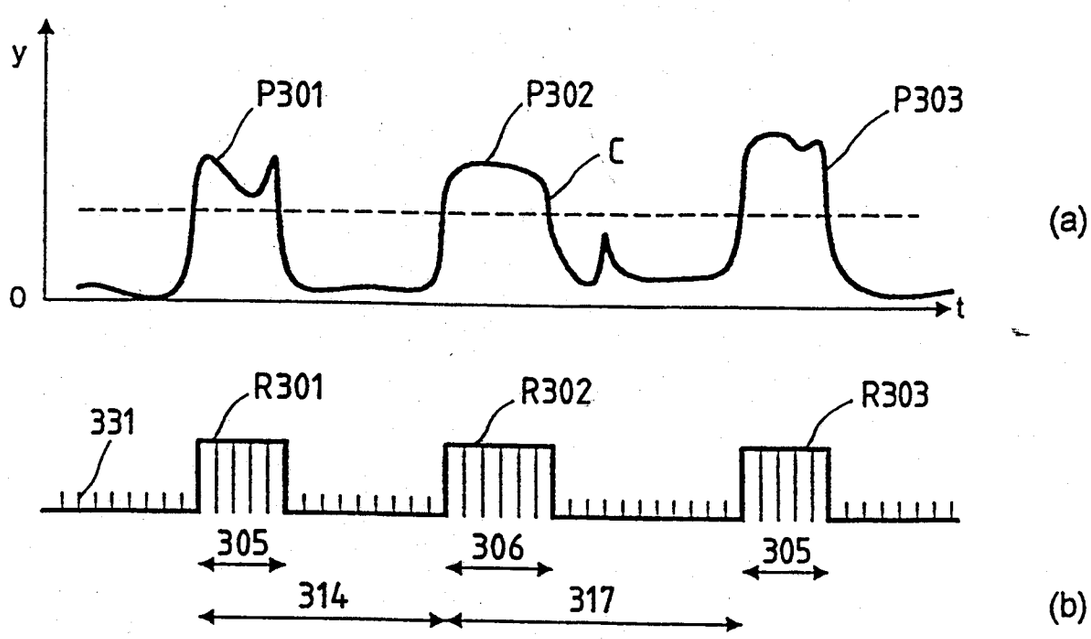

Fig. 29

SAMSUNG EXHIBIT 1004
Page 89 of 404

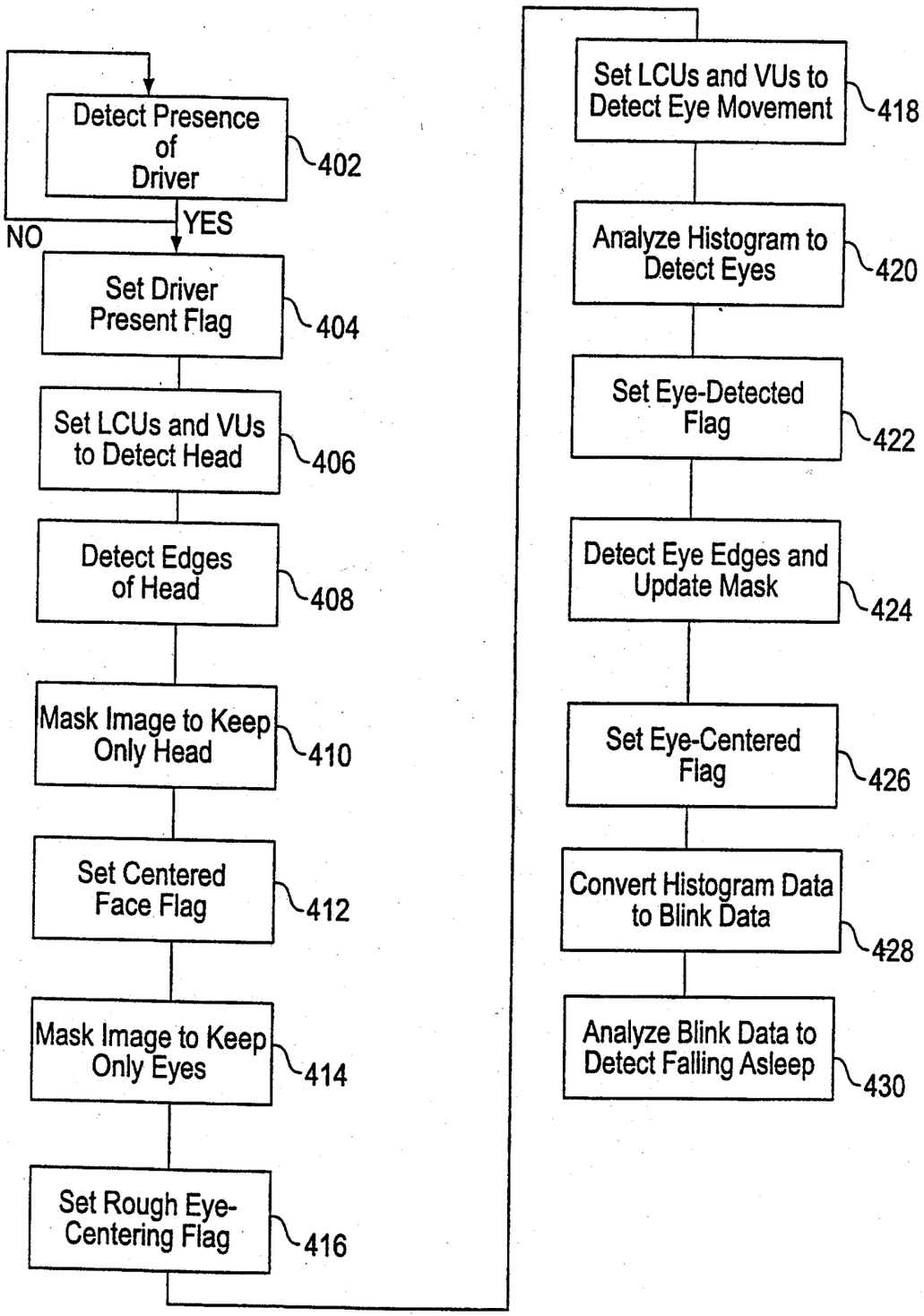

FIG. 30

SAMSUNG EXHIBIT 1004
Page 90 of 404

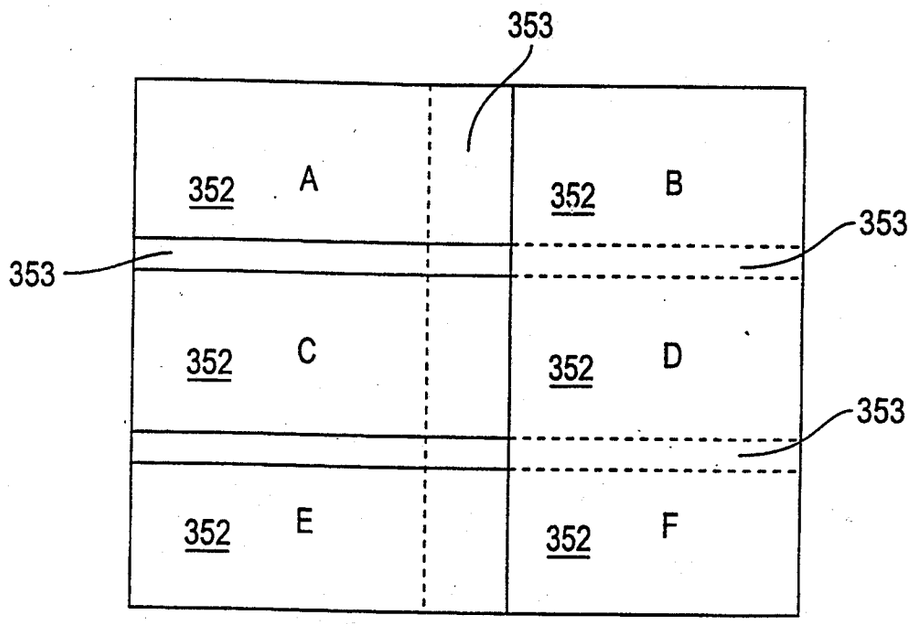
353
352
A
352
B
353
353
352
C
352
D
353
352
E
352
F

FIG. 31

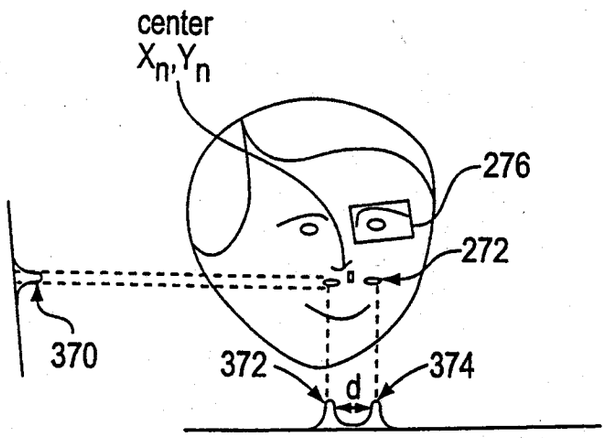
center
X_n, Y_n
276
272
370
372
374
d

FIG. 32

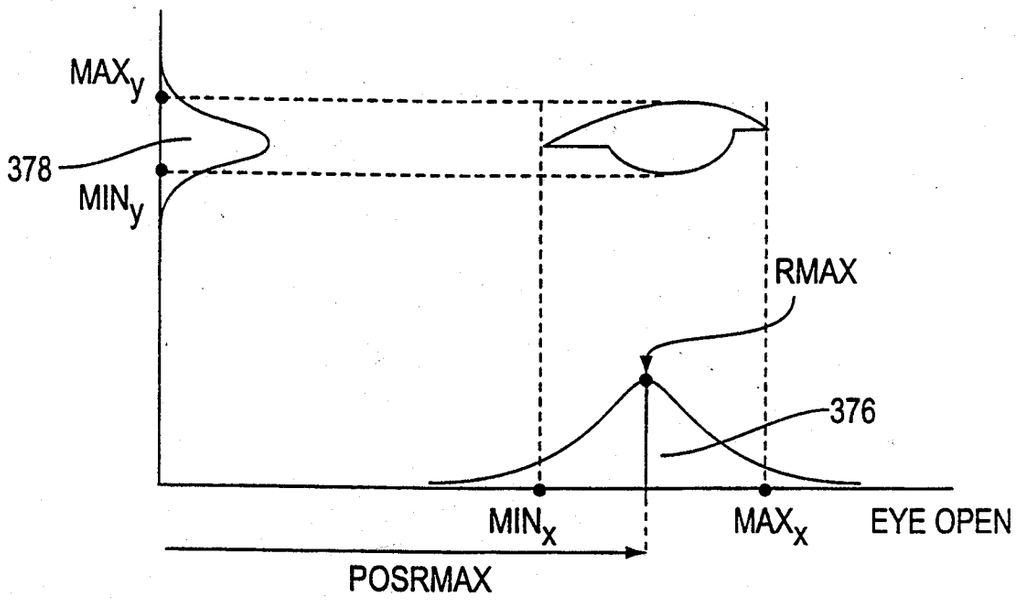

FIG. 33

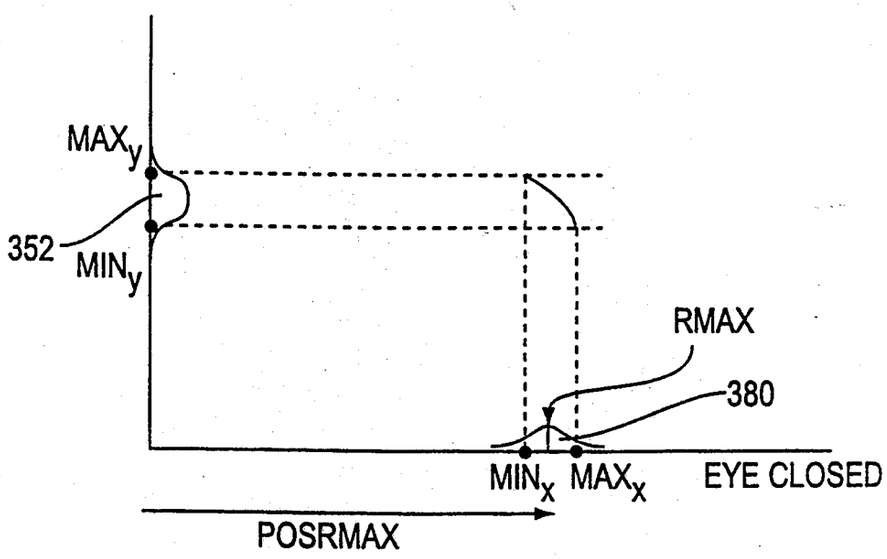

FIG. 34

SAMSUNG EXHIBIT 1004
Page 92 of 404

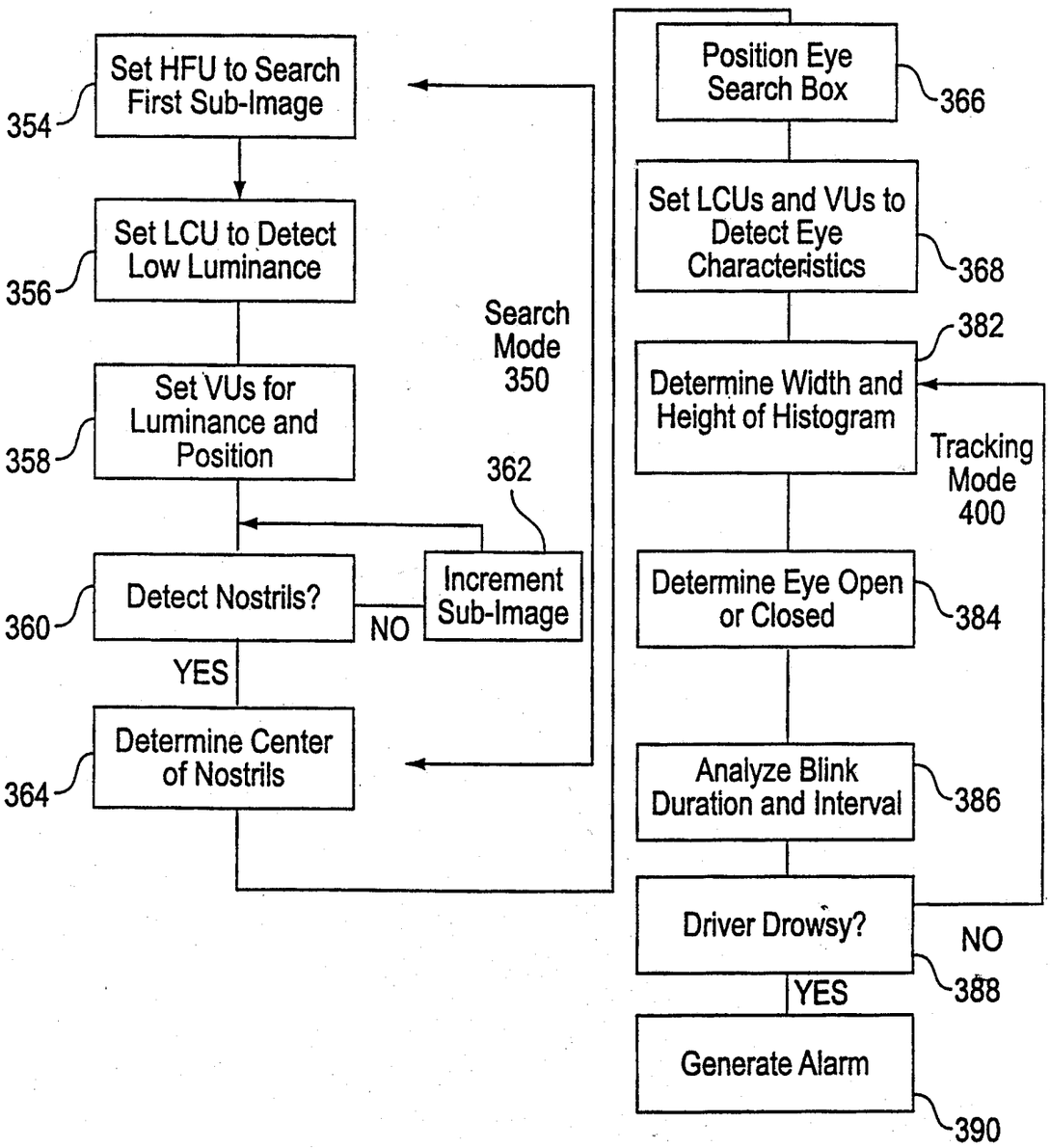

FIG. 35

SAMSUNG EXHIBIT 1004
Page 93 of 404

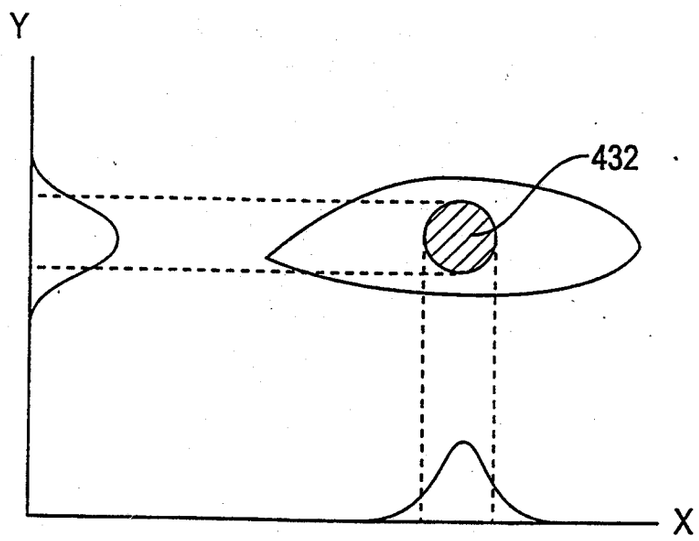

FIG. 36

SUBSTITUTE SHEET (RULE 26)

SAMSUNG EXHIBIT 1004
Page 94 of 404

PRINT OF DRAW[illegible]GS
AS ORIGINALL[illegible]LED

09/600390
PCT/EP99/00300

EFD 1/15/98

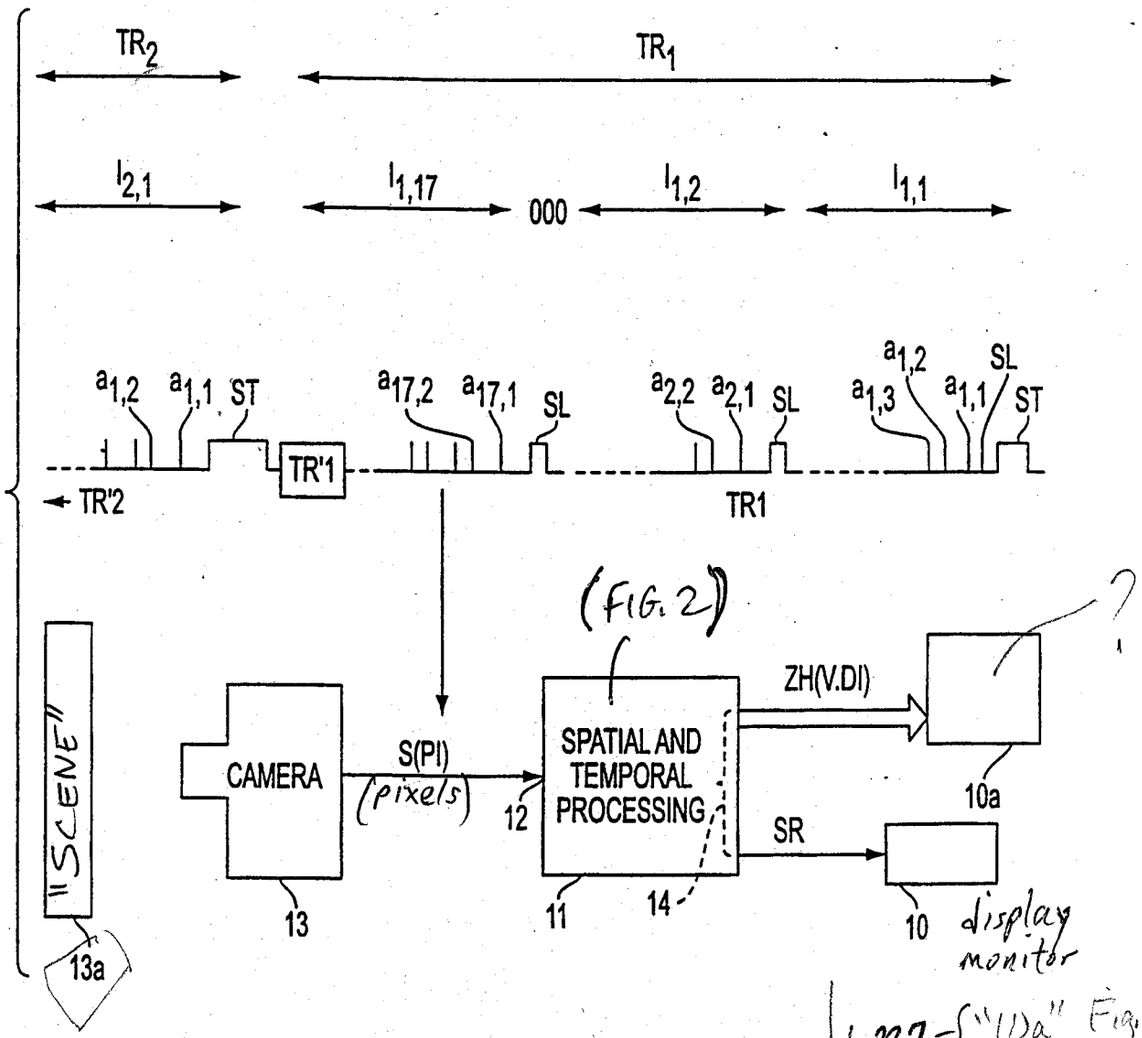

FIG. 1

OG
27

6.31 pp. 1, 3, 9, 39, 40, 11, 16, 18, 24, 25-26, 23, 28, 30, 41

Rule 52(b)(5) pages # consec.

6.22.7 - {"10a" Fig. 1 / "13A" Fig. 2}

6.22 - "Fig. 11" (sheet 5)

6.22.6 - Fig. 24 (327d)

~~6.22.7 - p. 41 [illegible] Fig 27~~

6.22 - Z' → Z1 (Figs 2 + 11)

6.22 - VI → VL (Fig. 2)

6.22 - DL → DI (Fig 11)

2.26

SUBSTITUTE SHEET (RULE 26)

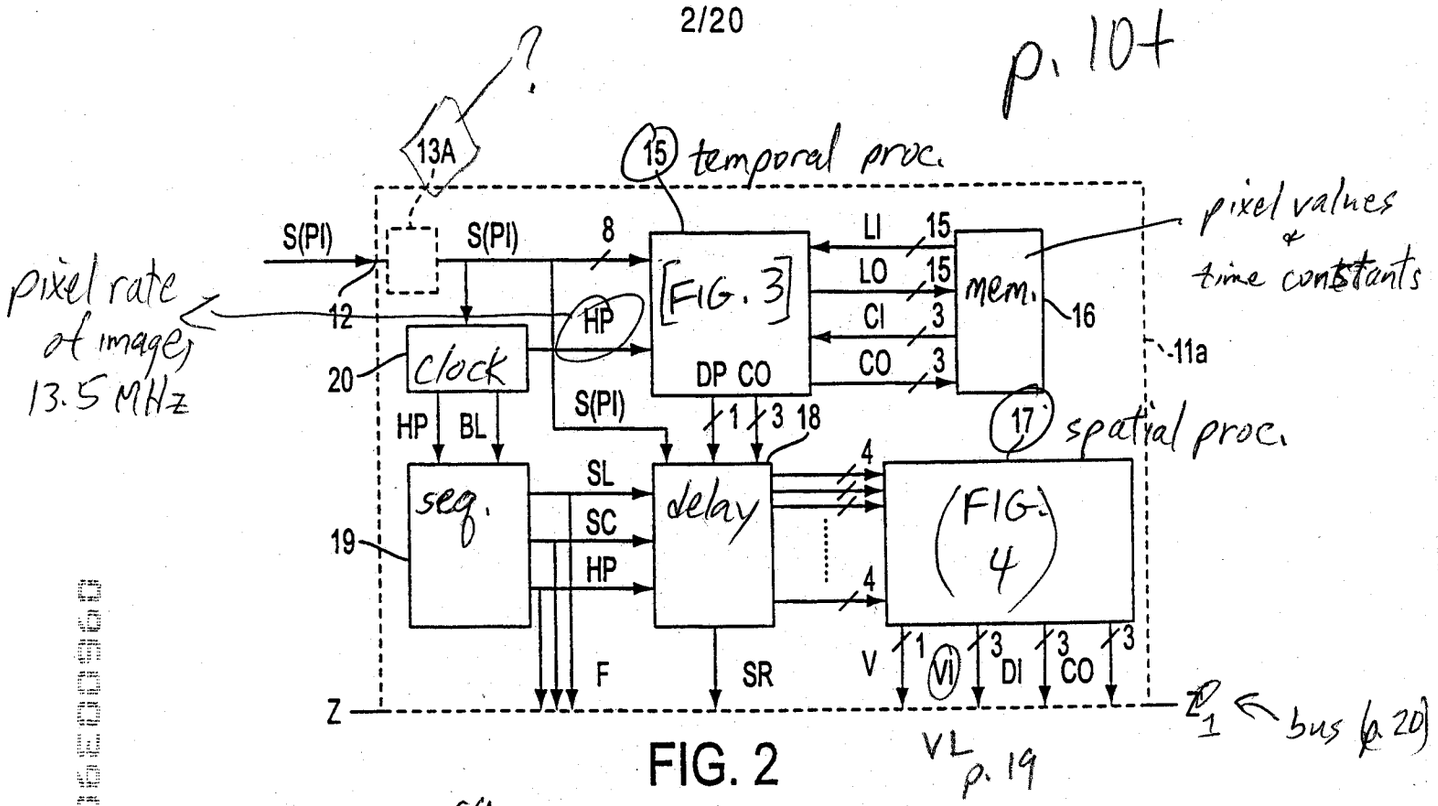

FIG. 2

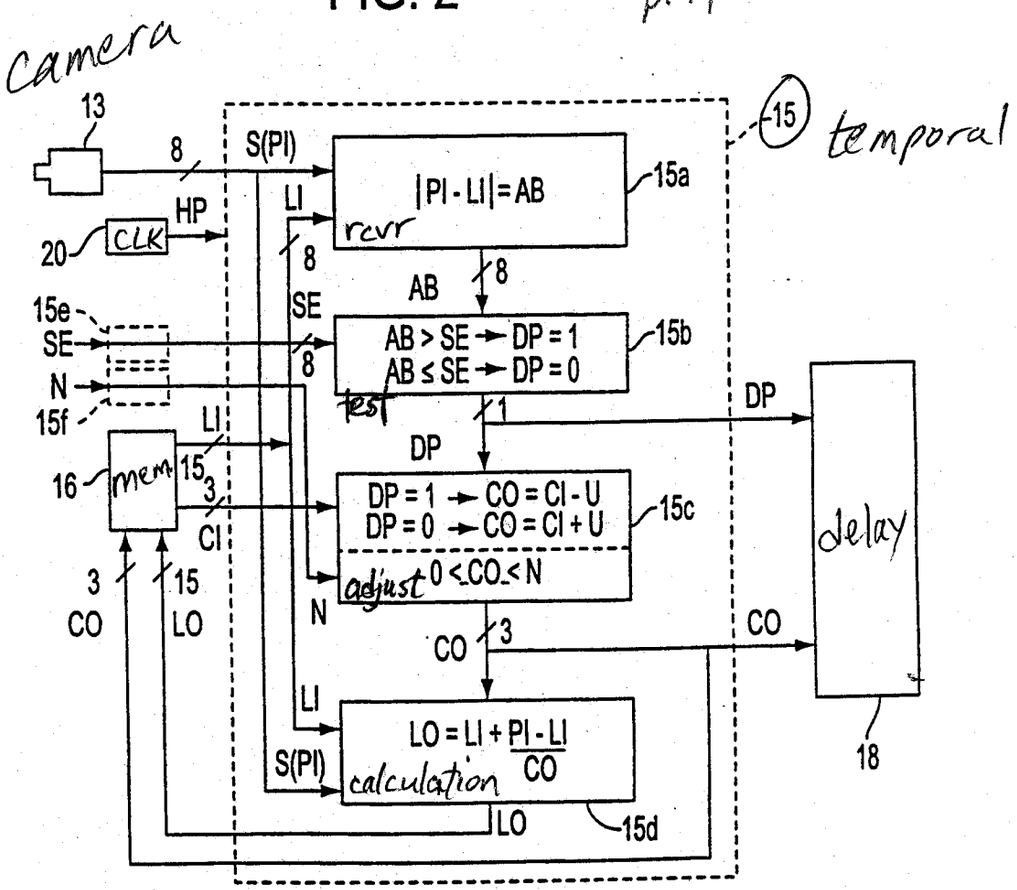

FIG. 3

SAMSUNG EXHIBIT 1004
Page 96 of 404

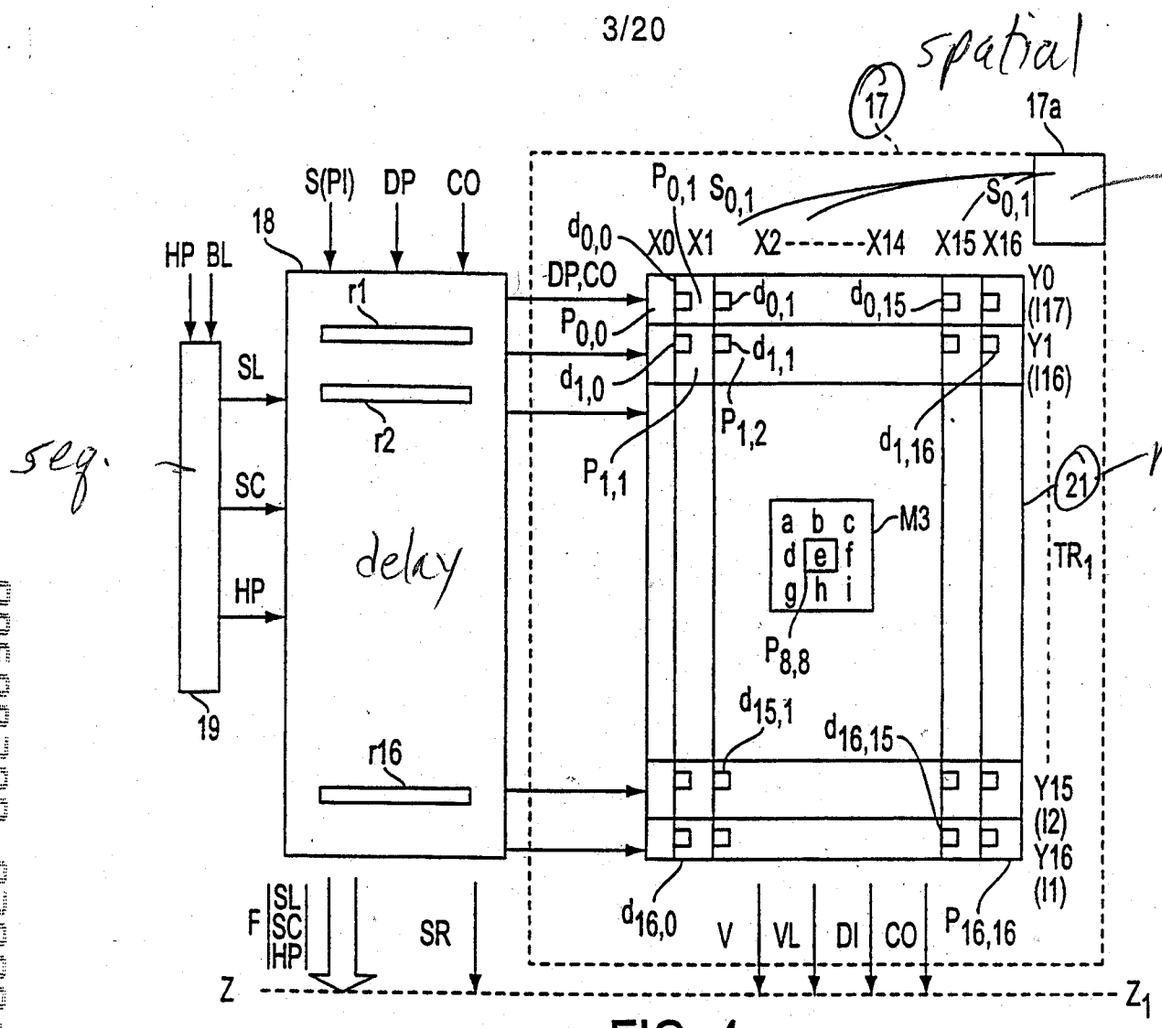

FIG. 4

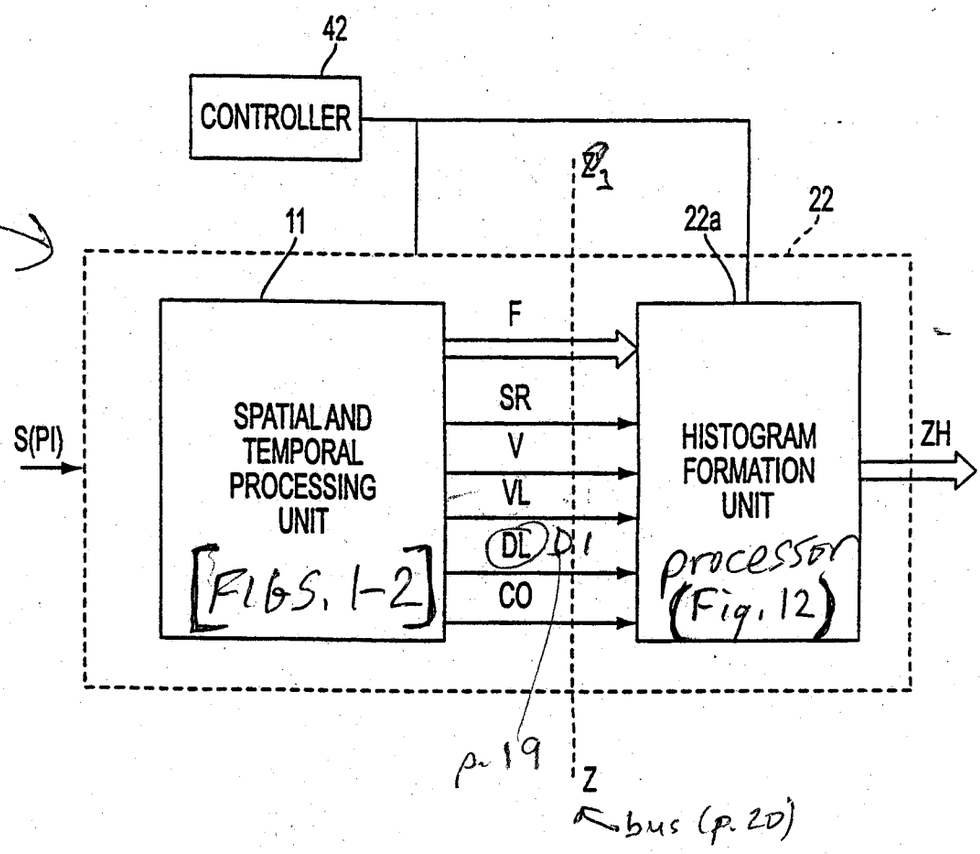

FIG. 11?

p. 20+

SAMSUNG EXHIBIT 1004
Page 97 of 404

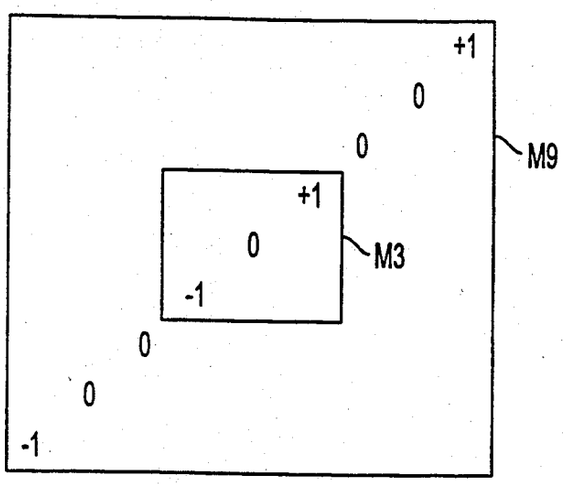

FIG. 7

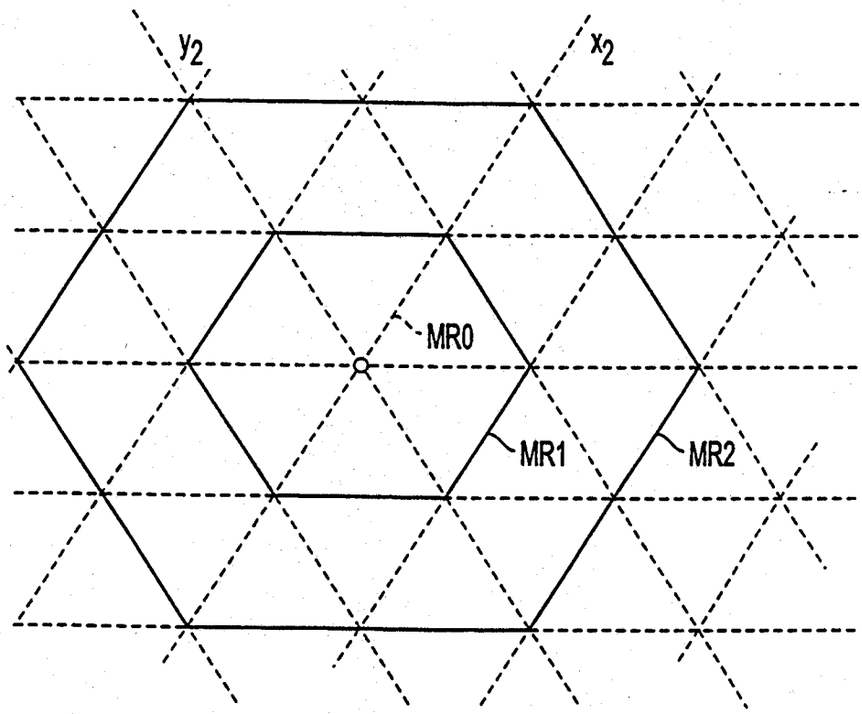

FIG. 8

SAMSUNG EXHIBIT 1004
Page 98 of 404

reverse-L matrices

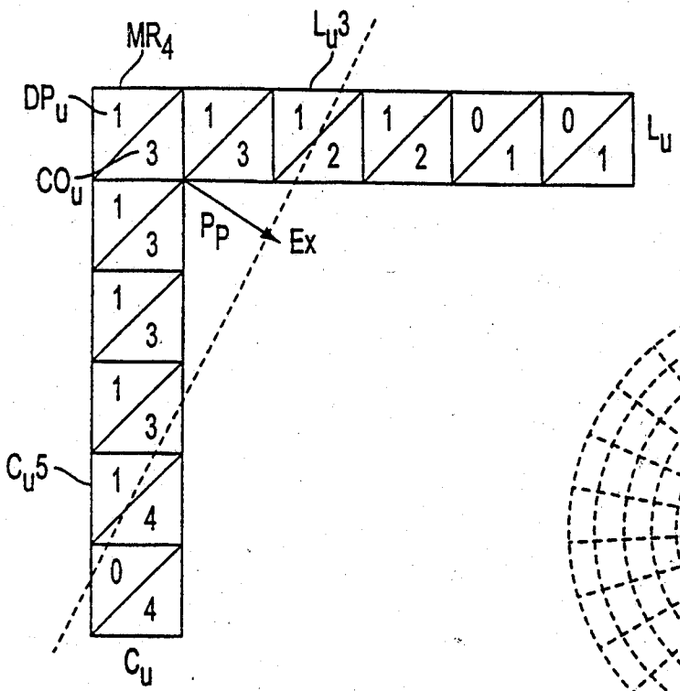

FIG. 9

[pp. 19-20]

angular sector shaped matrices

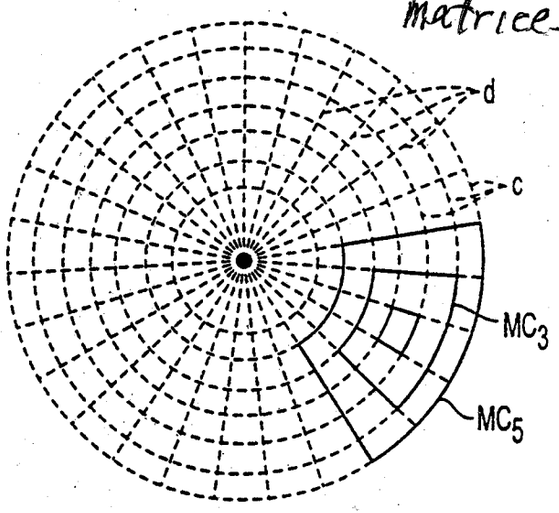

FIG. 10

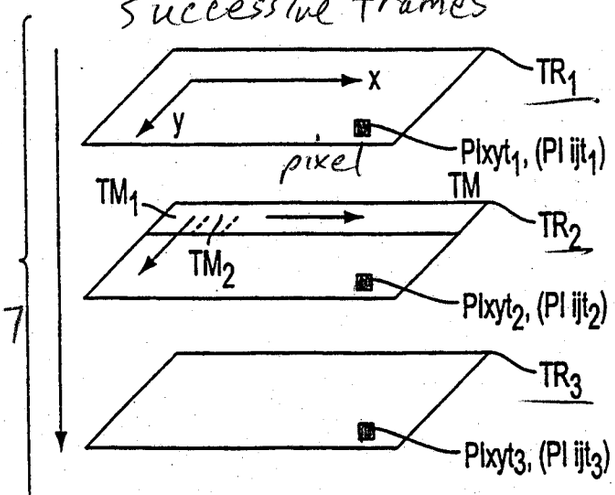

pp. 13-14, 16-17

FIG. 5

pixel processing

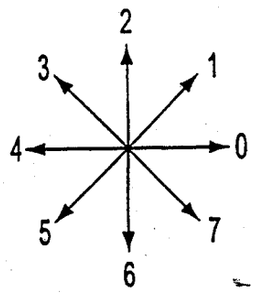

FIG. 6

Freeman code (movement direction)

SAMSUNG EXHIBIT 1004
Page 99 of 404

histogram proc. 22a in Fig 11

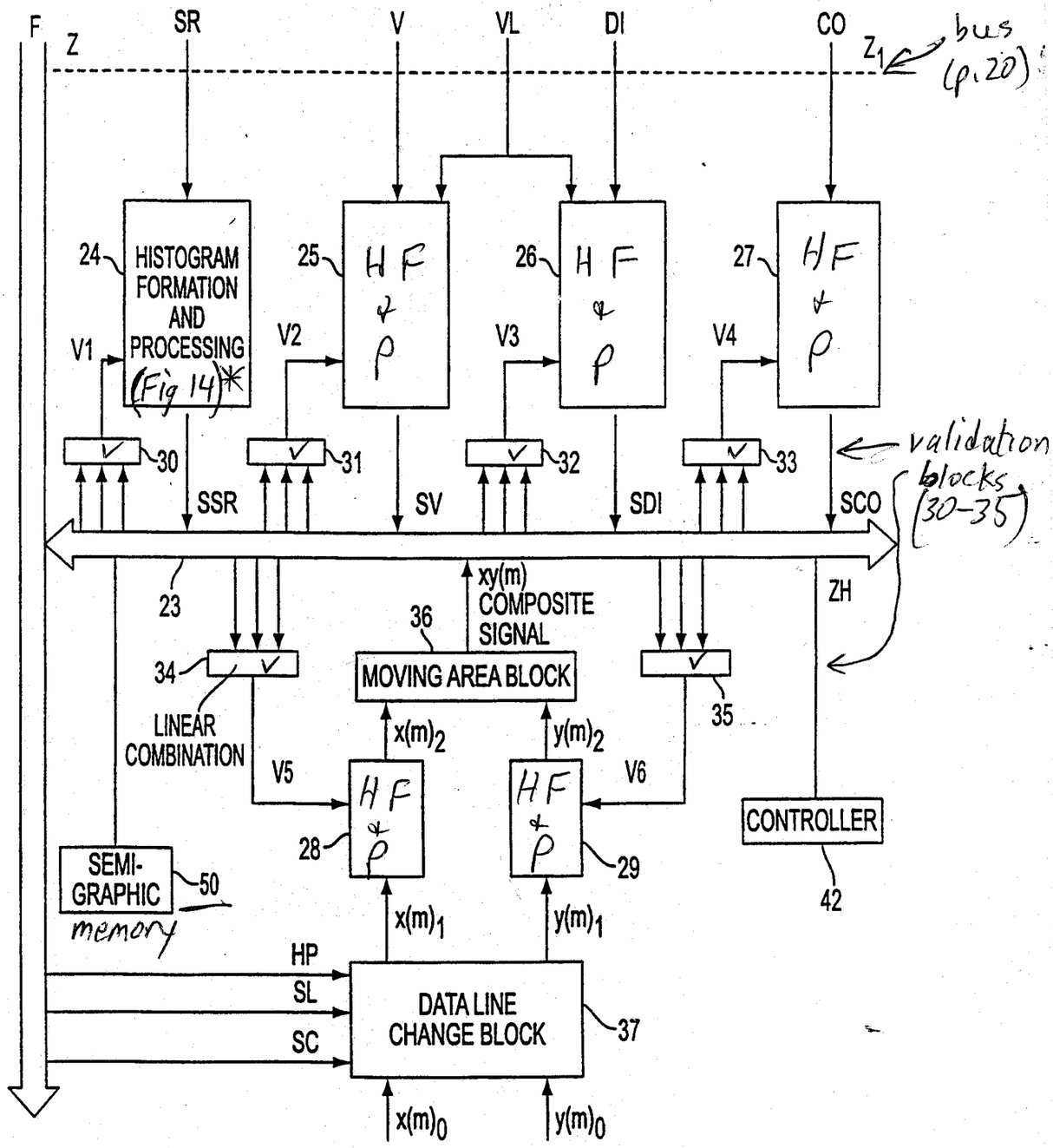

FIG. 12

SAMSUNG EXHIBIT 1004
Page 100 of 404

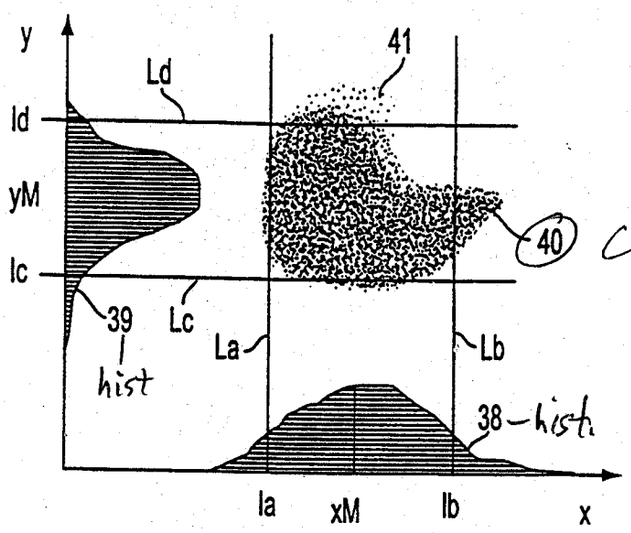

2-D hist.
pp. 27-28
composite histogram

FIG. 13

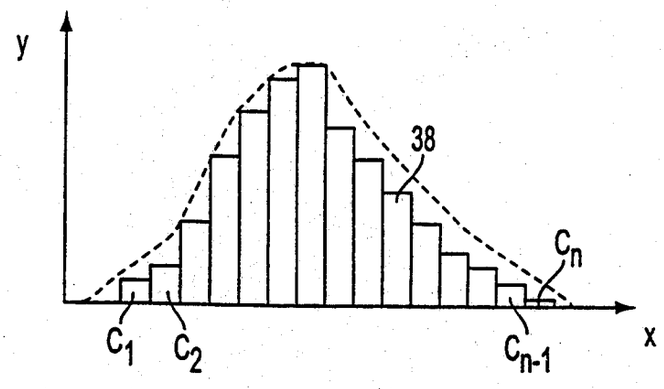

1-D hist.
pp. 26-27

FIG. 16

SAMSUNG EXHIBIT 1004
Page 101 of 404

histogram block (one of 24-29 in Fig. 12)

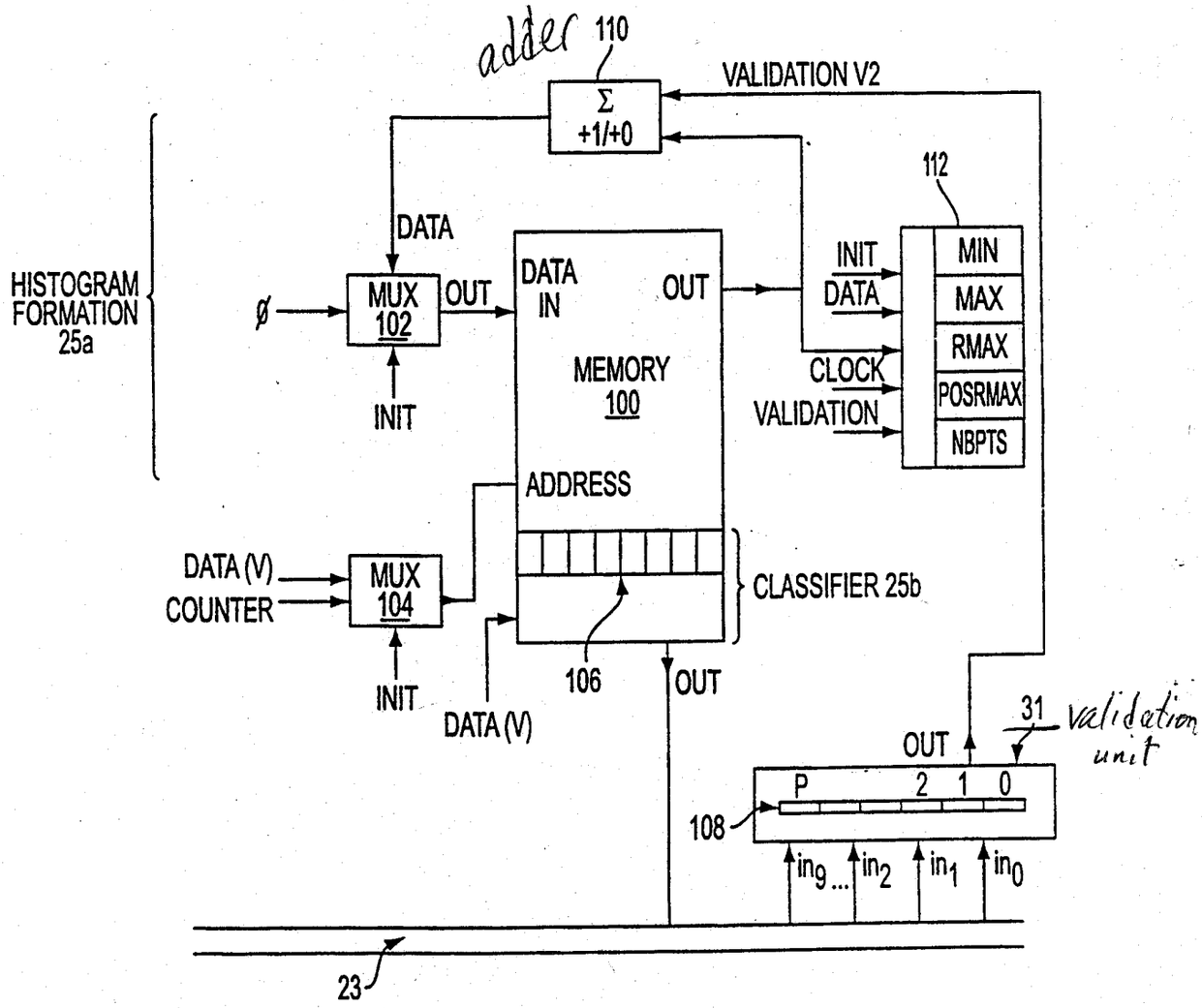

FIG. 14

SAMSUNG EXHIBIT 1004
Page 102 of 404

operation of hist. formation unit p. 29+

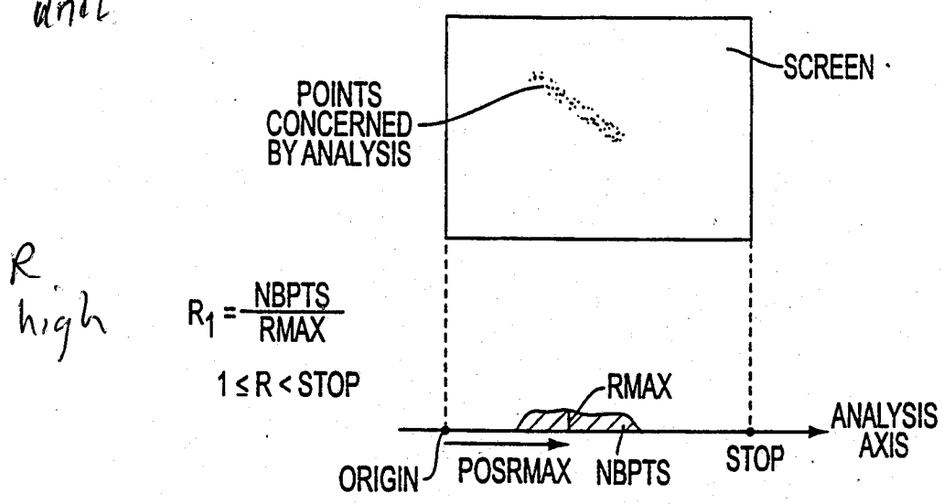

FIG. 15A

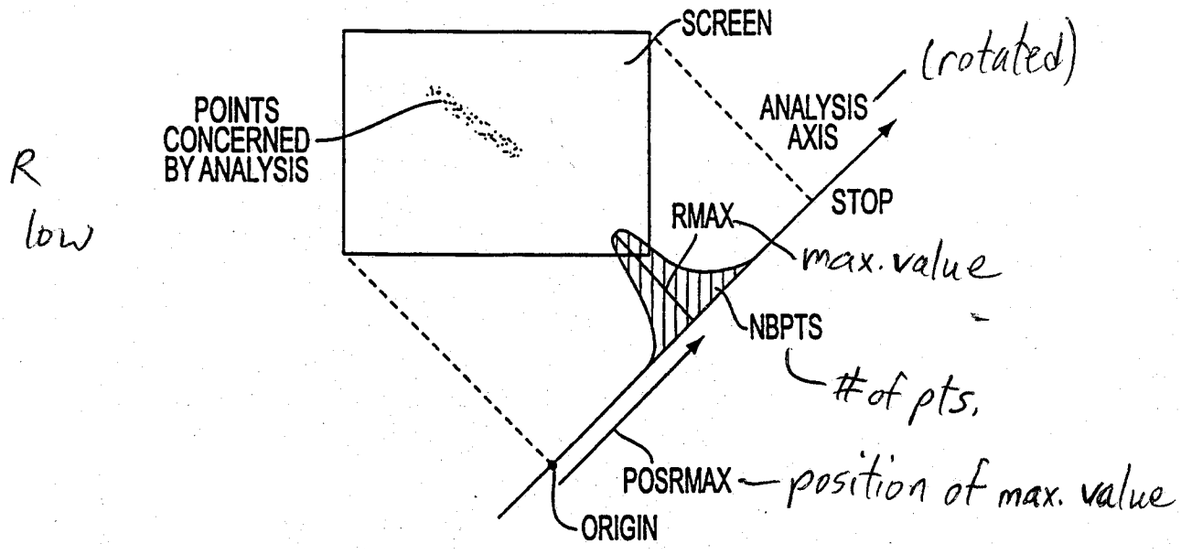

FIG. 15B

SAMSUNG EXHIBIT 1004
Page 103 of 404

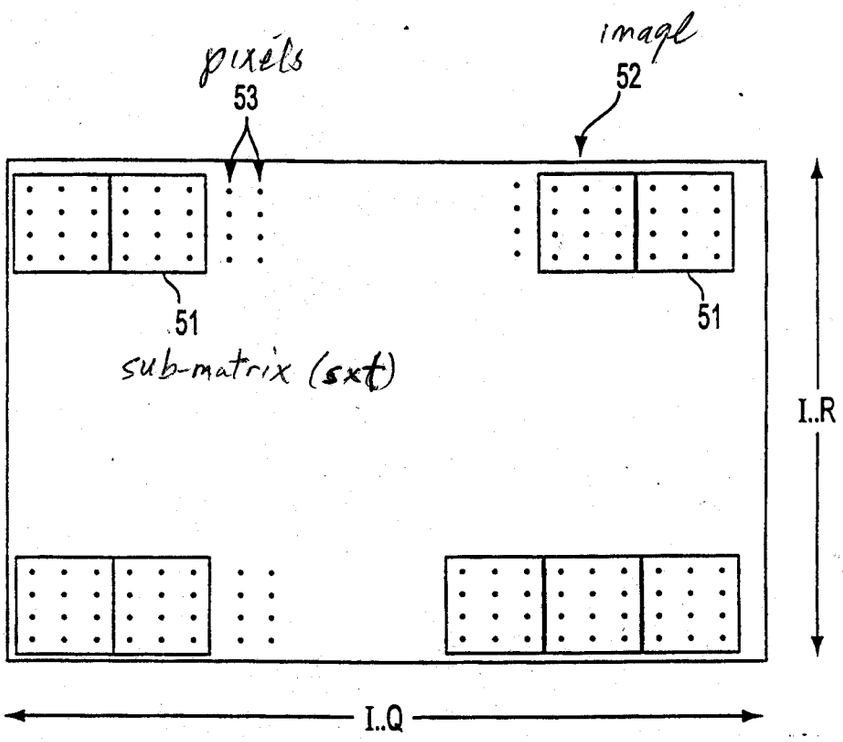

FIG. 17 p. 25+

SAMSUNG EXHIBIT 1004
Page 104 of 404

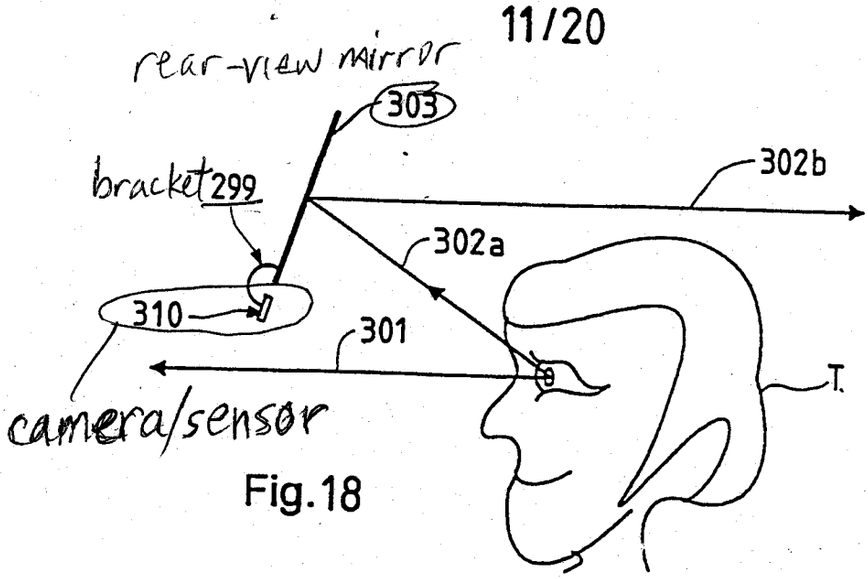

p. 33

Fig.18

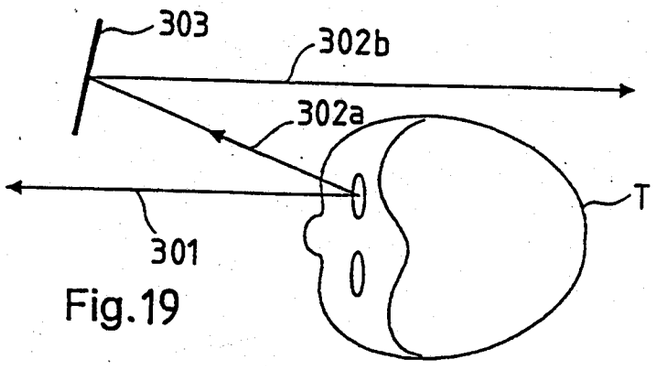

Fig.19

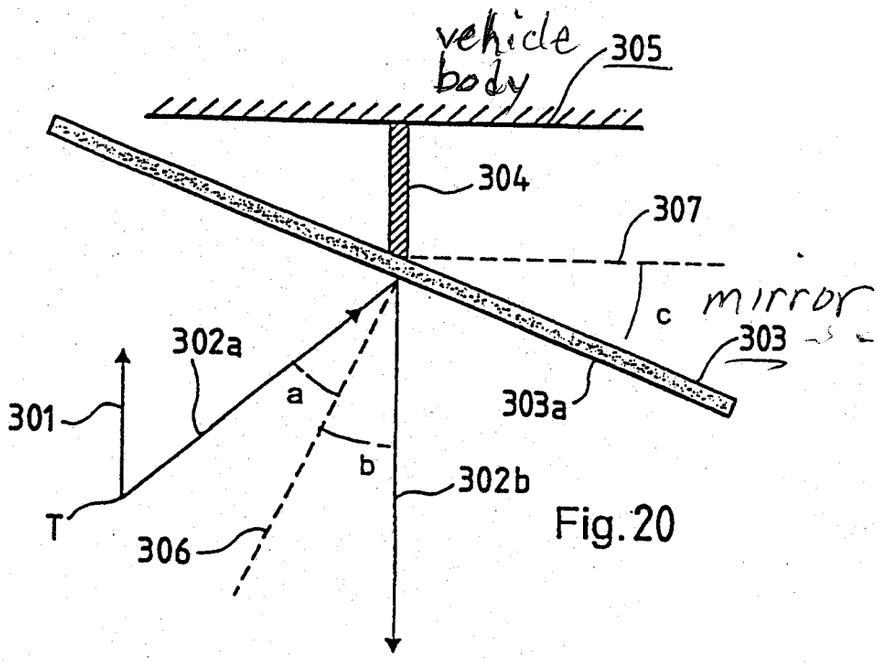

Fig.20

p. 33+

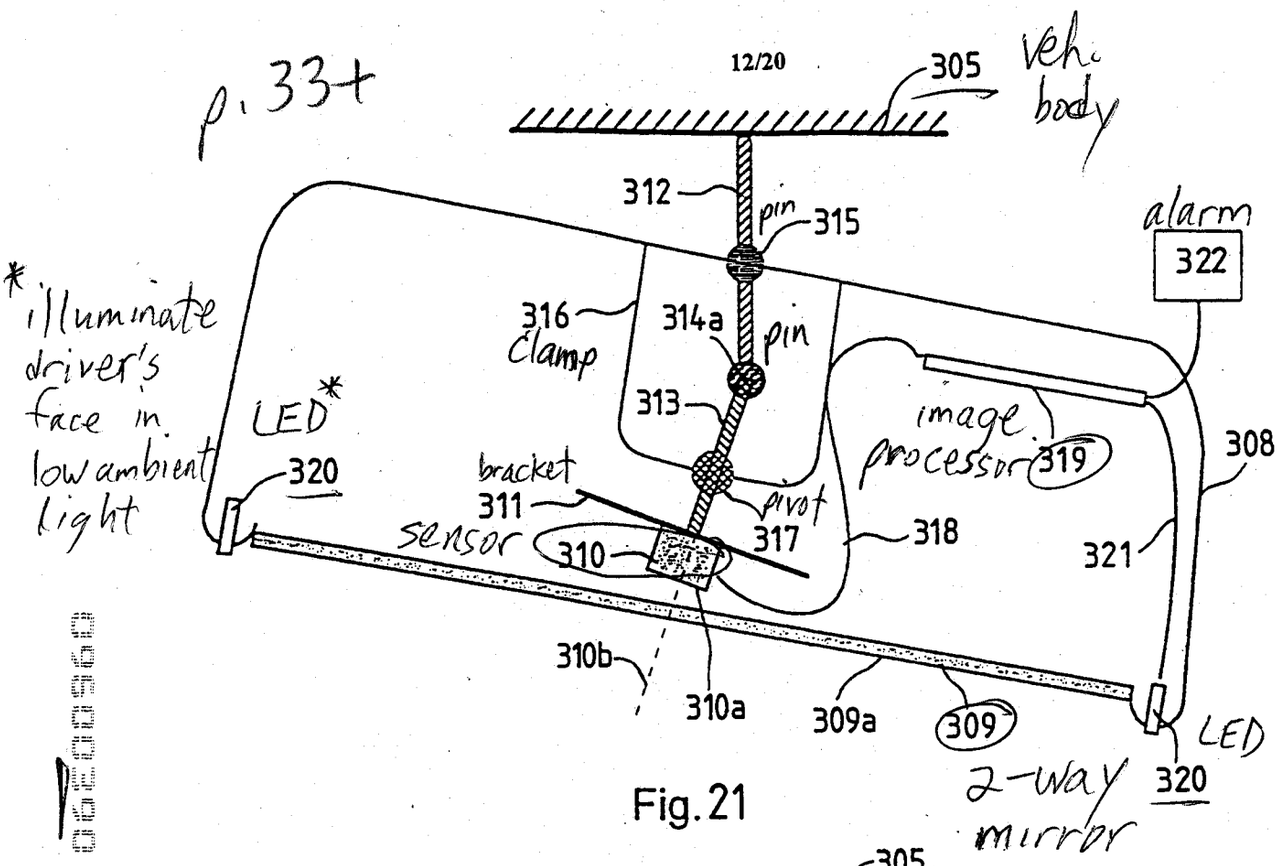

Fig. 21

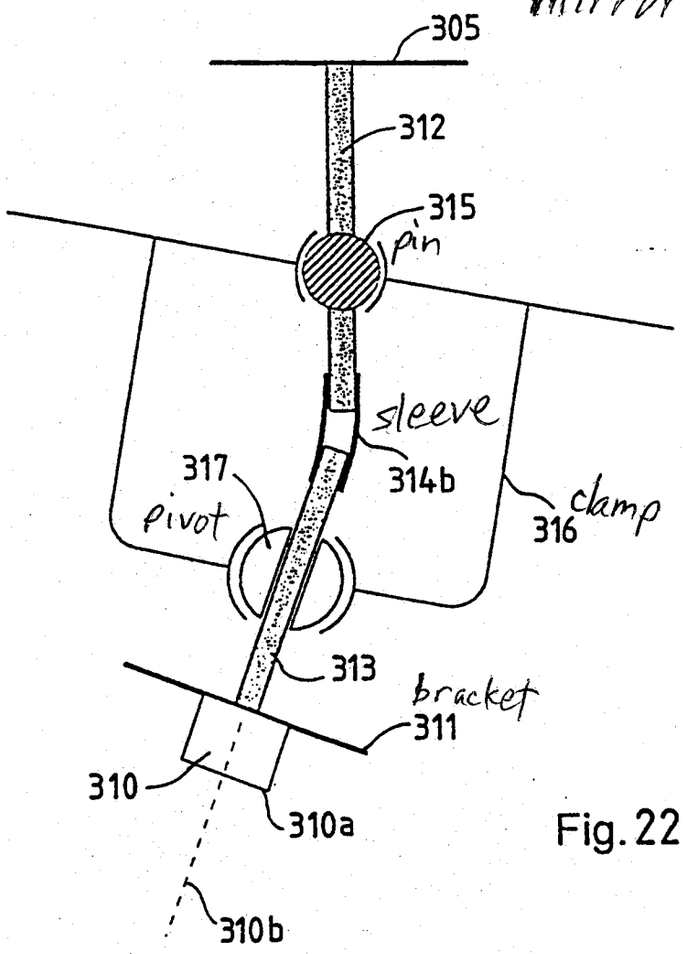

Fig. 22

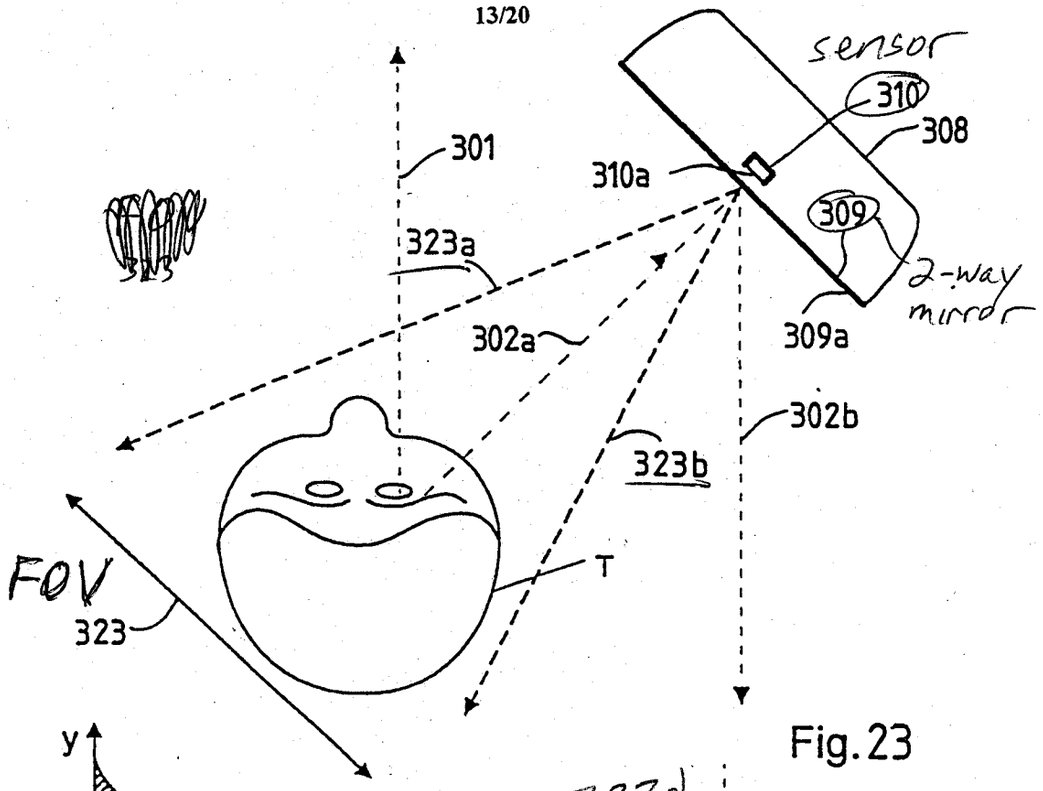

Fig. 23

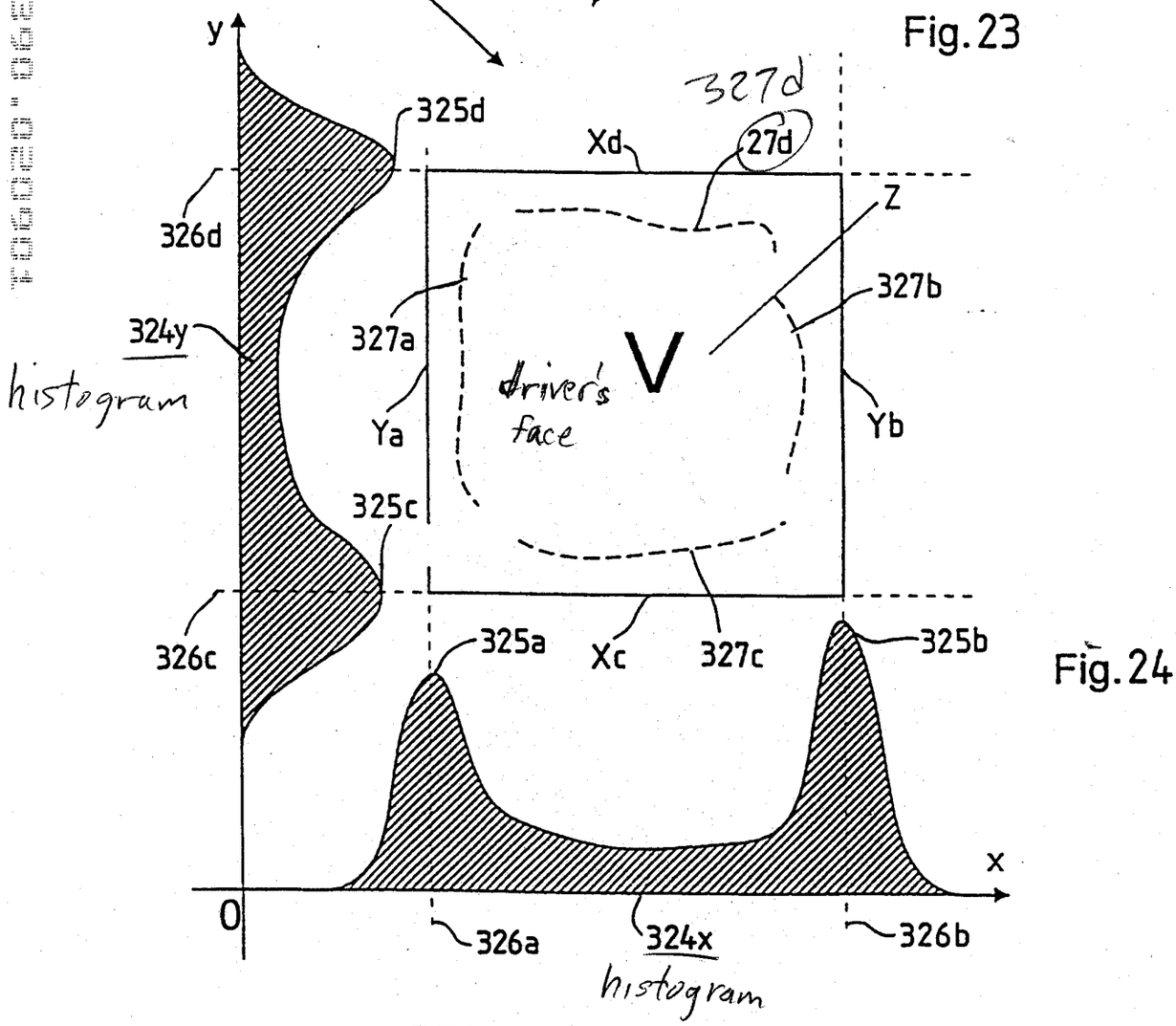

Fig. 24

SAMSUNG EXHIBIT 1004
Page 107 of 404

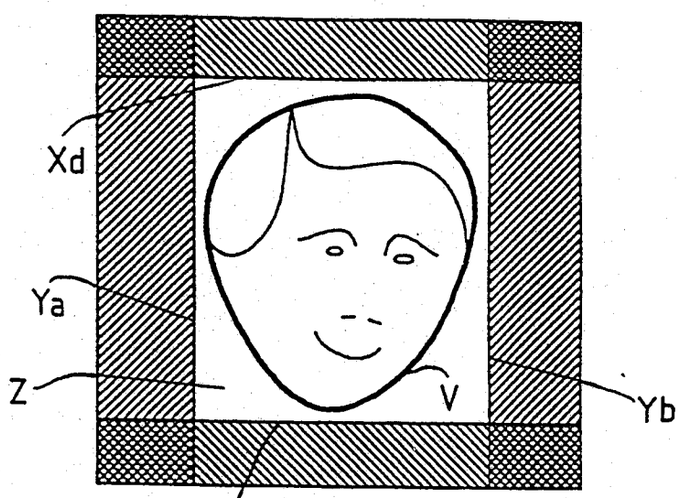

Fig.25

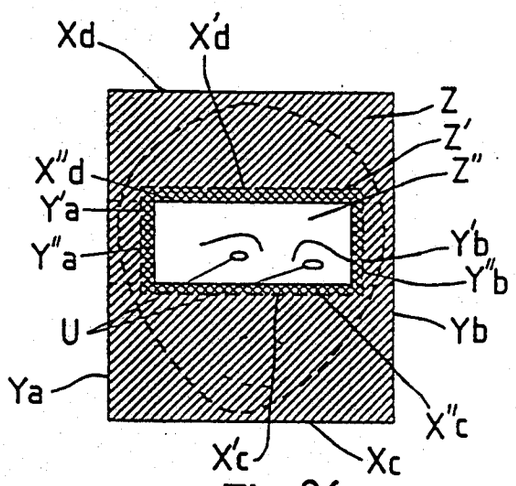

Fig.26

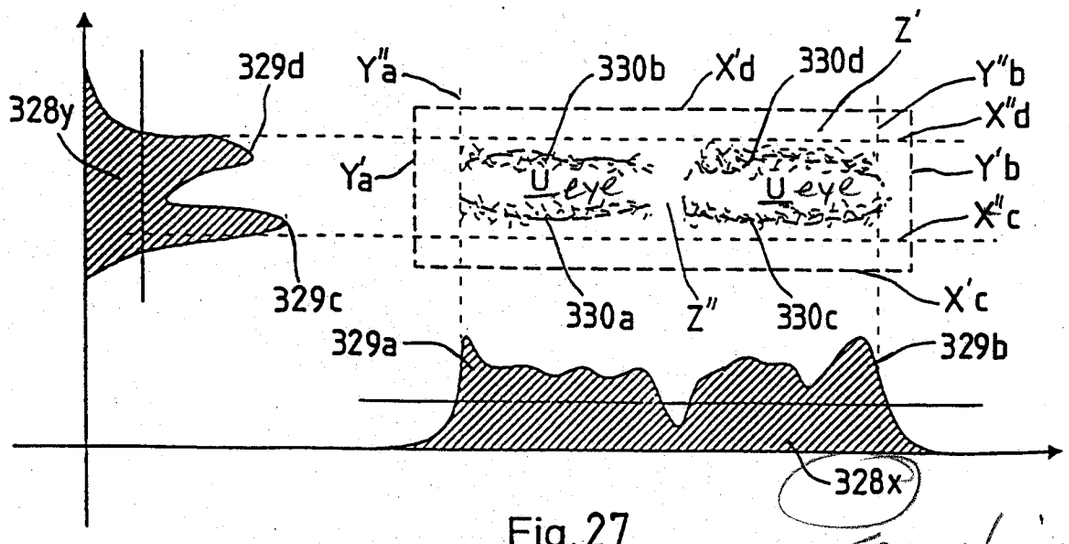

Fig.27

see claims

SAMSUNG EXHIBIT 1004
Page 108 of 404

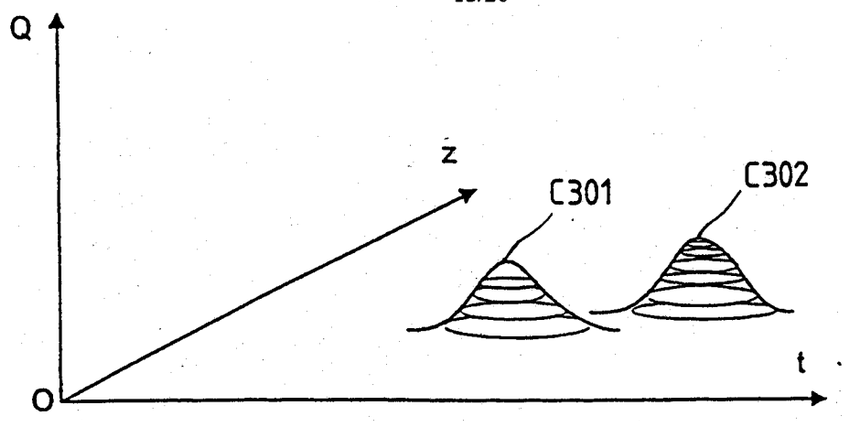

Fig. 28

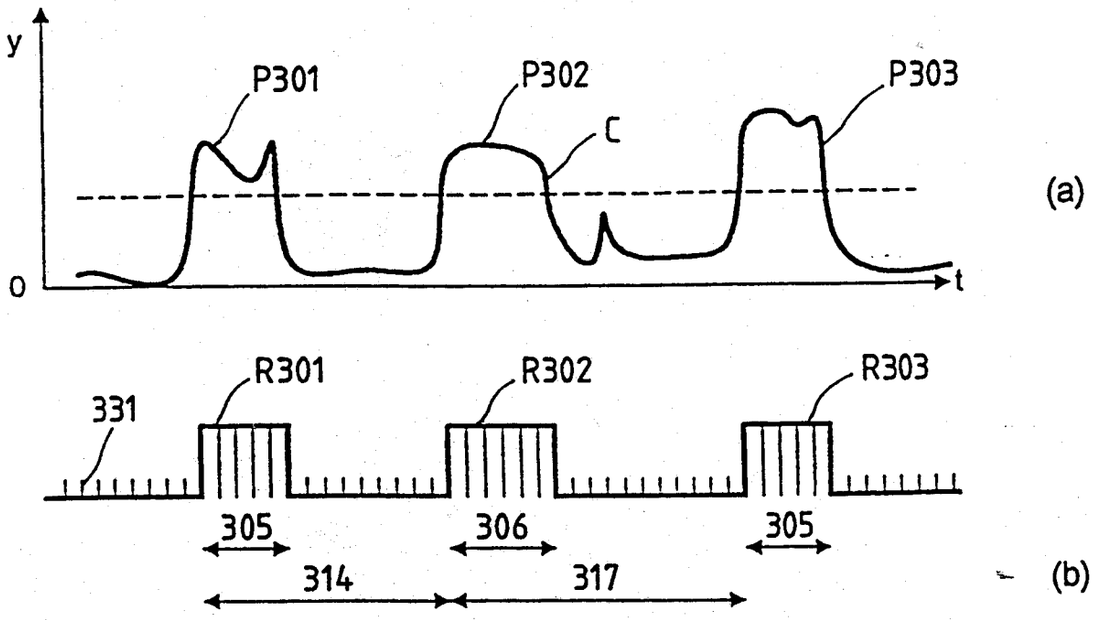

Fig. 29

SAMSUNG EXHIBIT 1004
Page 109 of 404

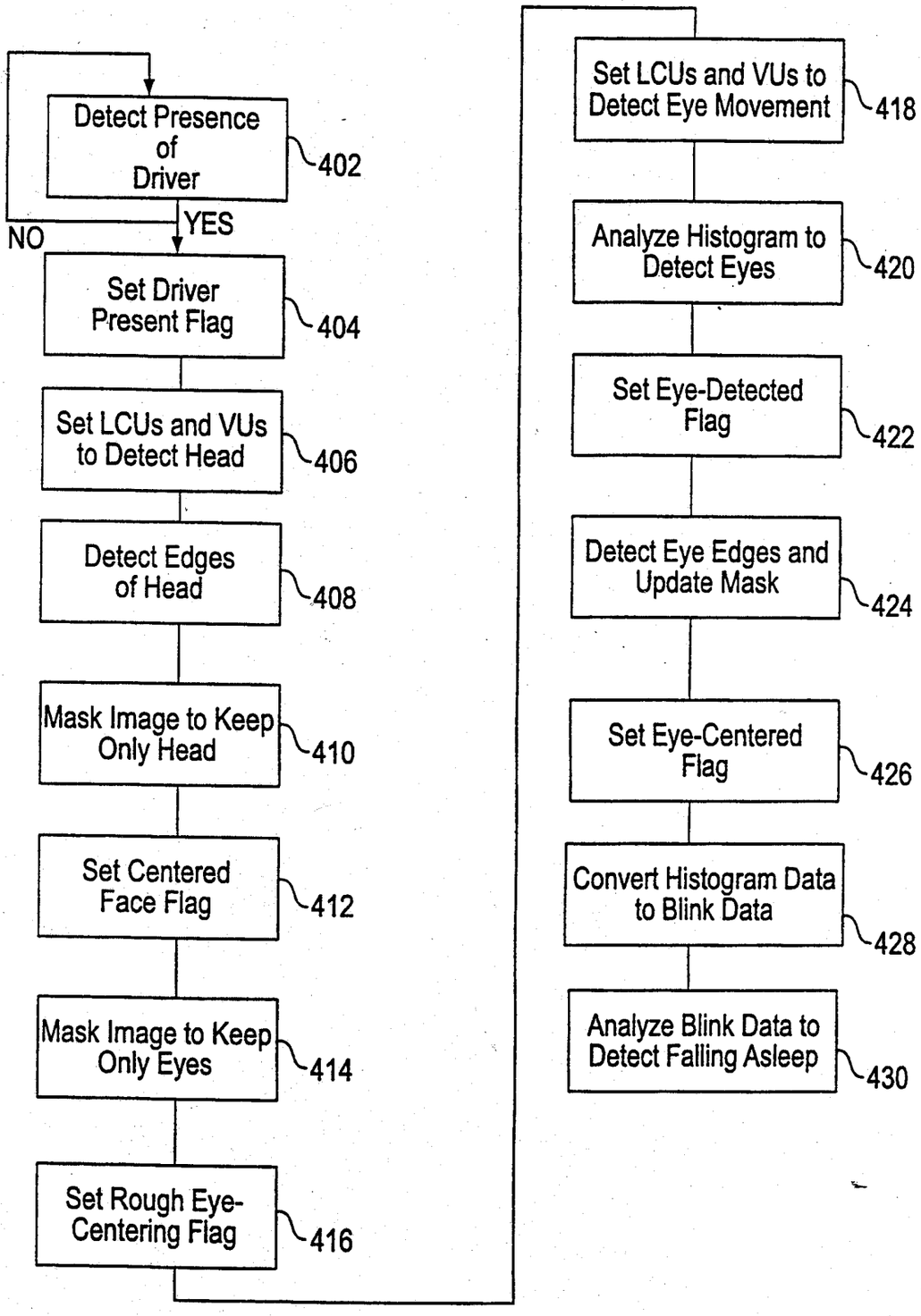

FIG. 30

p. 36+

SAMSUNG EXHIBIT 1004
Page 110 of 404

17/20

Alternative method

p. 42+

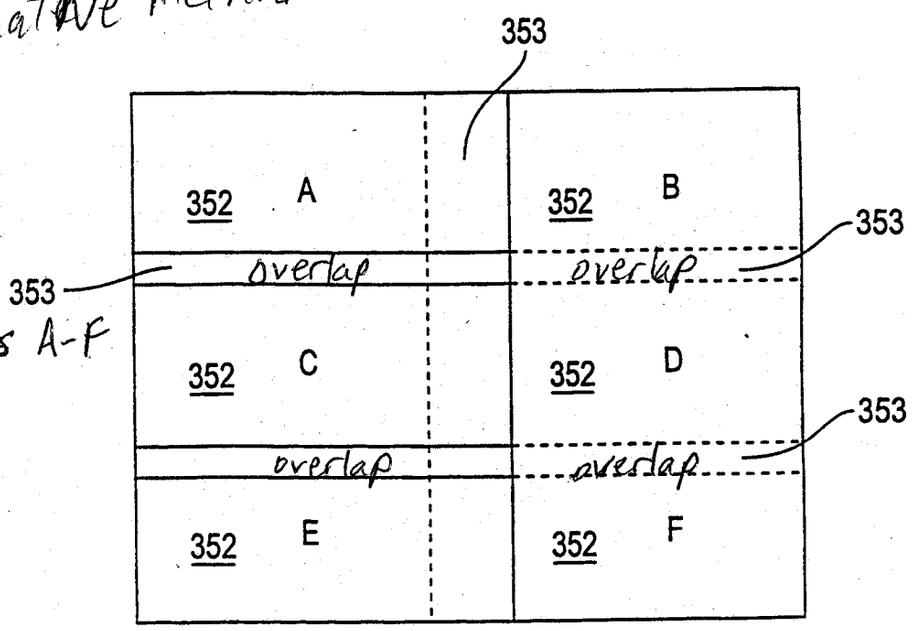

submages A-F (352)

FIG. 31

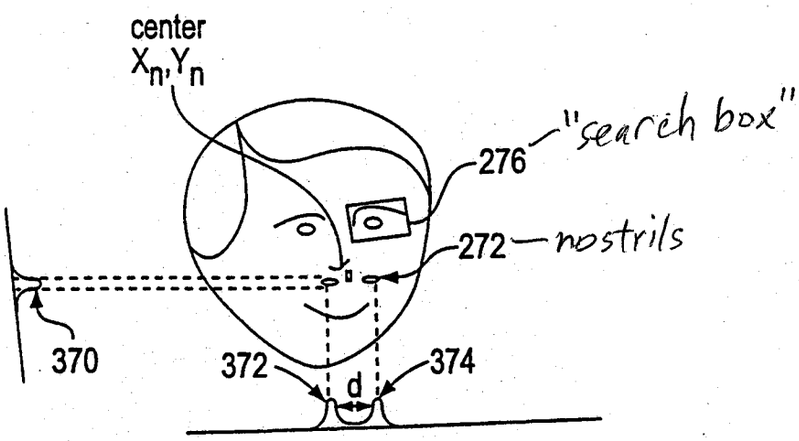

FIG. 32

SAMSUNG EXHIBIT 1004
Page 111 of 404

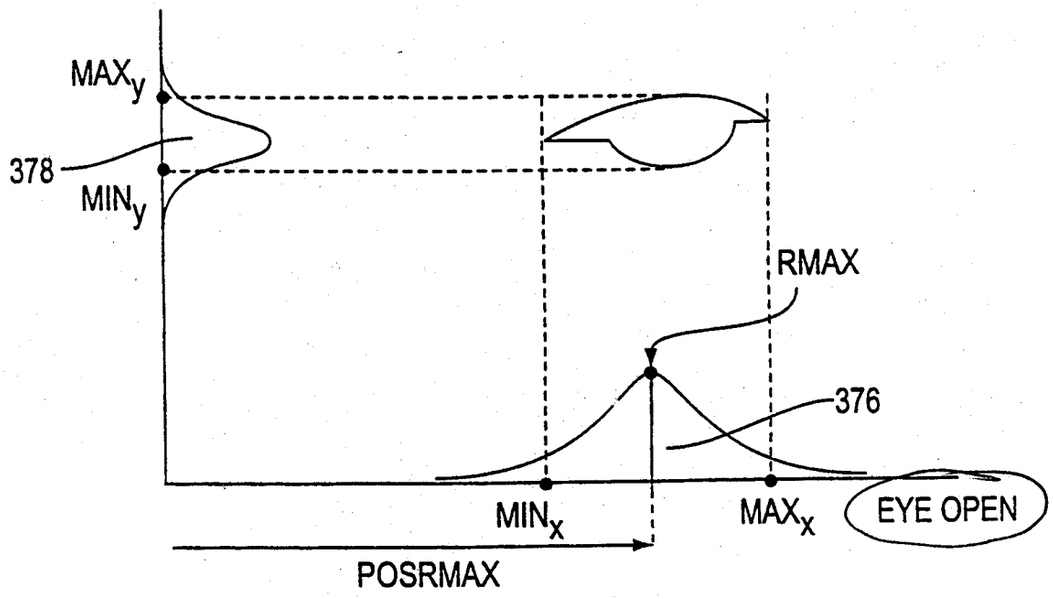

FIG. 33

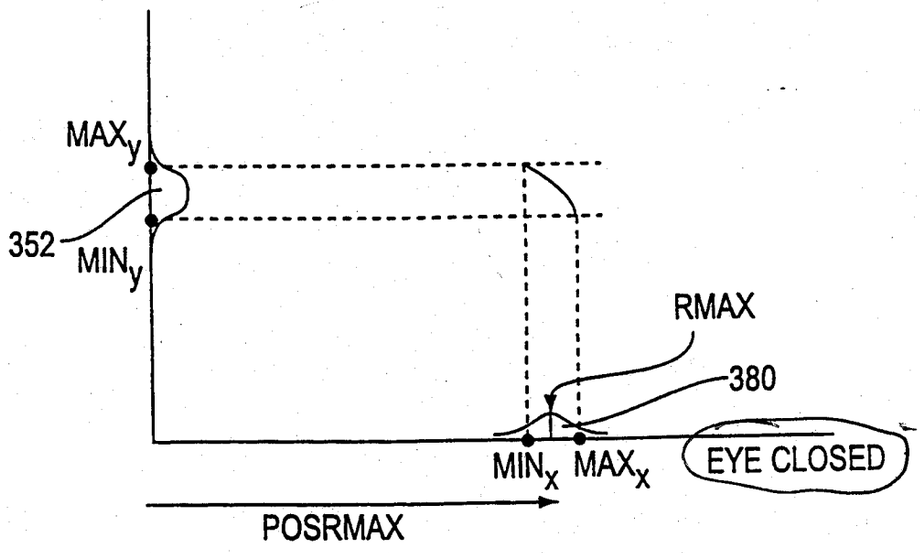

FIG. 34

SAMSUNG EXHIBIT 1004
Page 112 of 404

PRINT OF DRAV GS
AS ORIGINALL ED

09/600390
PCT/EP99/00300

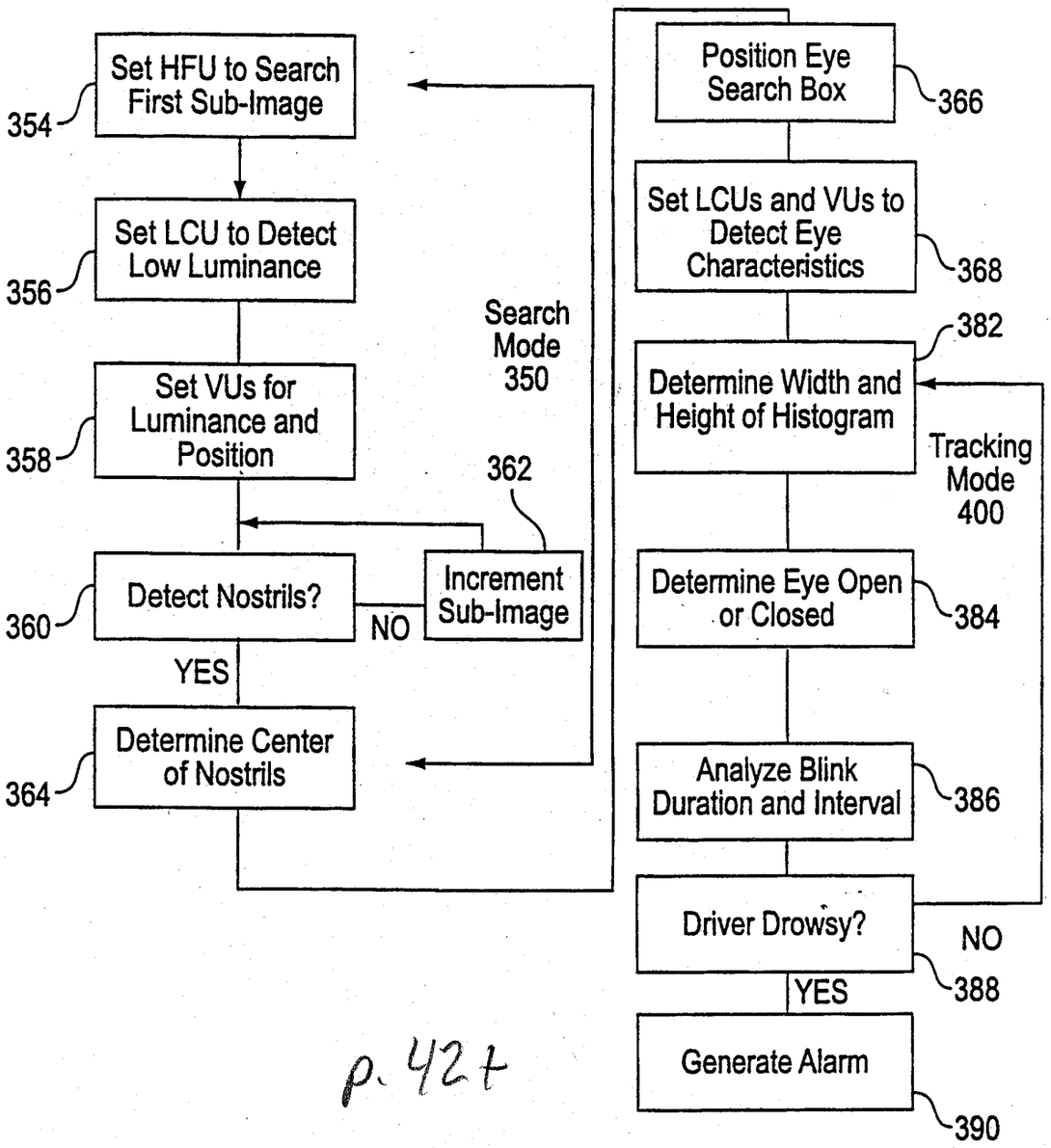

p. 42

FIG. 35

SAMSUNG EXHIBIT 1004
Page 113 of 404

PRINT OF DRAWINGS
AS ORIGINALLY FILED

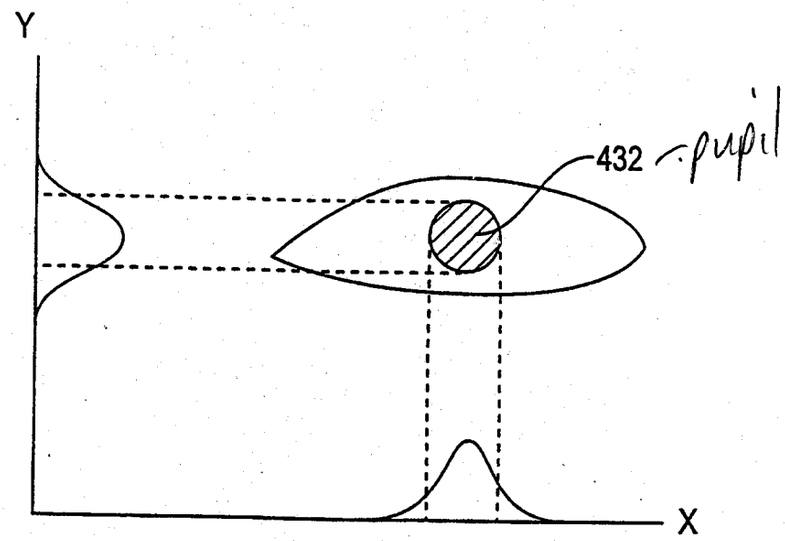

FIG. 36

histogram

replacement sheet

SAMSUNG EXHIBIT 1004
Page 114 of 404

424 Rec'd PC PTO 14 JUL 2000

FORM PTO-1390 (REV 11-98) U.S. DEPARTMENT OF COMMERCE PATENT AND TRADEMARK OFFICE

TRANSMITTAL LETTER TO THE UNITED STATES DESIGNATED/ELECTED OFFICE (DO/EO/US) CONCERNING A FILING UNDER 35 U.S.C. 371

ATTORNEY'S DOCKET NUMBER: 20046H-000600US

U.S. APPLICATION NO. (If known, see 37 CFR 1.5): 09/600390

INTERNATIONAL APPLICATION NO.	INTERNATIONAL FILING DATE	PRIORITY DATE CLAIMED
PCT/EP99/00300	January 15, 1999	January 15, 1998

TITLE OF INVENTION: METHOD AND APPARATUS FOR DETECTION OF DROWSINESS

APPLICANT(S) FOR DO/EO/US: PATRICK PIRIM, THOMAS BINFORD

Applicant herewith submits to the United States Designated/Elected Office (DO/EO/US) the following items and other information:

1. [x] This is a **FIRST** submission of items concerning a filing under 35 U.S.C. 371.
2. [ ] This is a **SECOND** or **SUBSEQUENT** submission of items concerning a filing under 35 U.S.C. 371.
3. [x] This express request to begin national examination procedures (35 U.S.C. 371(f)) at any time rather than delay examination until the expiration of the applicable time limit set in 35 U.S.C. 371(b) and PCT Articles 22 and 39(1).
4. [x] A proper Demand for International Preliminary Examination was made by the 19th month from the earliest claimed priority date.
5. [x] A copy of the International Application as filed (35 U.S.C. 371(c)(2))
   a. [ ] is transmitted herewith (required only if not transmitted by the International Bureau).
   b. [x] has been transmitted by the International Bureau.
   c. [ ] is not required, as the application was filed in the United States Receiving Office (RO/US).
6. [ ] A translation of the International Application into English (35 U.S.C. 371(c)(2)).
7. [x] Amendments to the claims of the International Application under PCT Article 19 (35 U.S.C. 371(c)(3))
   a. [ ] are transmitted herewith (required only if not transmitted by the International Bureau).
   b. [ ] have been transmitted by the International Bureau.
   c. [ ] have not been made; however, the time limit for making such amendments has NOT expired.
   d. [x] have not been made and will not be made.
8. [ ] A translation of the amendments to the claims under PCT Article 19 (35 U.S.C. 371(c)(3)).
9. [ ] An oath or declaration of the inventor(s) (35 U.S.C. 371(c)(4)).
10. [ ] A translation of the annexes to the International Preliminary Examination Report under PCT Article 36 (35 U.S.C. 371(c)(5)).

Items 11. to 16. below concern document(s) or information included:

11. [x] An Information Disclosure Statement under 37 CFR 1.97 and 1.98.
12. [ ] An assignment document for recording. A separate cover sheet in compliance with 37 CFR 3.28 and 3.31 is included.
13. [ ] A FIRST preliminary amendment.
    [ ] A SECOND or SUBSEQUENT preliminary amendment.
14. [ ] A substitute specification.
15. [ ] A change of power of attorney and/or address letter.
16. [x] Other items or information:

Courtesy copy of published application
ISR
3 references
IPER w/amended spec. sheets 1-1A, claim sheets 49-57

Note: The claims under consideration are amended claims 1-39, submitted with applicants' letter of January 11, 2000, and which are attached to the courtesy copy of the published application.

SAMSUNG EXHIBIT 1004
Page 115 of 404

534 Rec'd PCT/PTO 14 JUL 2000

U.S. APPLICATION NO. (if known, see 37 CFR 1.5)	INTERNATIONAL APPLICATION NO	ATTORNEY'S DOCKET NUMBER
09/600390	PCT/EP99/00300	20046H-000600US

17. [x] The following fees are submitted:	CALCULATIONS PTO USE ONLY	
BASIC NATIONAL FEE (37 CFR 1.492 (a) (1) - (5)):		
Neither international preliminary examination fee (37 CFR 1.482) nor international search fee (37 CFR 1.445(a)(2)) paid to USPTO and International Search Report not prepared by the EPO or JPO $970.00		
International preliminary examination fee (37 CFR 1.482) not paid to USPTO but International Search Report prepared by the EPO or JPO $840.00		
International preliminary examination fee (37 CFR 1.482) not paid to USPTO but international search fee (37 CFR 1.445(a)(2)) paid to USPTO $760.00		
International preliminary examination fee paid to USPTO (37 CFR 1.482) but all claims did not satisfy provisions of PCT Article 33(1)-(4) $670.00		
International preliminary examination fee paid to USPTO (37 CFR 1.482) and all claims satisfied provisions of PCT Article 33(1)-(4) $96.00		
ENTER APPROPRIATE BASIC FEE AMOUNT =	$840	
Surcharge of $130.00 for furnishing the oath or declaration later than [ ] 20 [ ] 30 months from the earliest claimed priority date (37 CFR 1.492(e)).	$	

CLAIMS	NUMBER FILED	NUMBER EXTRA	RATE		
Total claims	39 - 20 =	+19	X $18.00	$342	
Independent claims	6 - 3 =	+3	X $78.00	$234	
MULTIPLE DEPENDENT CLAIM(S) (if applicable)			+ $260.00	$	
TOTAL OF ABOVE CALCULATIONS =				$1,416	
Reduction of 1/2 for filing by small entity, if applicable. A Small Entity Statement must also by filed (Note 37 CFR 1.9, 1.27, 1.28).				$	
SUBTOTAL =				$	
Processing fee of $130.00 for furnishing the English translation later than [ ]20 [ ]30 months from the earliest claimed priority date (37 CFR 1.492(f)). +				$	
TOTAL NATIONAL FEE =				$1,416	
Fee for recording the enclosed assignment (37 CFR 1.21(h)). The assignment must be accompanied by an appropriate cover sheet (37 CFR 3.28, 3.31). $40.00 per property +				$	
TOTAL FEES ENCLOSED =				$1,416	
				Amount to be: refunded	$
				charged	$

a. [ ] A check in the amount of $_____ to cover the above fees is enclosed.

b. [x] Please charge my Deposit Account No. 20-1430 in the amount of $1,416 to cover the above fees. A duplicate copy of this sheet is enclosed.

c. [x] The Commissioner is hereby authorized to charge any additional fees which may be required, or credit any overpayment to Deposit Account No. 20-1430. A duplicate copy of this sheet is enclosed.

NOTE: Where an appropriate time limit under 37 CFR 1.494 or 1.495 has not been met, a petition to revive (37 CFR 1.137(a) or (b)) must be filed and granted to restore the application to pending status.

SEND ALL CORRESPONDENCE TO:
Babak S. Sani
Townsend and Townsend and Crew LLP
Two Embarcadero Center, 8th fl.
San Francisco, CA 94111

SIGNATURE:

Babak S. Sani
NAME

37,495
REGISTRATION NUMBER

SAMSUNG EXHIBIT 1004
Page 116 of 404

534 Rec'd PCT/PTO 14 JUL 2000

FORM PTO-1390 (REV 11-98) U.S. DEPARTMENT OF COMMERCE PATENT AND TRADEMARK OFFICE

ATTORNEY'S DOCKET NUMBER: 20046H-000600US

TRANSMITTAL LETTER TO THE UNITED STATES DESIGNATED/ELECTED OFFICE (DO/EO/US) CONCERNING A FILING UNDER 35 U.S.C. 371

U.S. APPLICATION NO. (If known, see 37 CFR 1.5): 09/600390

INTERNATIONAL APPLICATION NO.	INTERNATIONAL FILING DATE	PRIORITY DATE CLAIMED
PCT/EP99/00300	January 15, 1999	January 15, 1998

TITLE OF INVENTION: METHOD AND APPARATUS FOR DETECTION OF DROWSINESS

APPLICANT(S) FOR DO/EO/US: PATRICK PIRIM, THOMAS BINFORD

Applicant herewith submits to the United States Designated/Elected Office (DO/EO/US) the following items and other information:

1. [x] This is a **FIRST** submission of items concerning a filing under 35 U.S.C. 371.
2. [ ] This is a **SECOND** or **SUBSEQUENT** submission of items concerning a filing under 35 U.S.C. 371.
3. [x] This express request to begin national examination procedures (35 U.S.C. 371(f)) at any time rather than delay examination until the expiration of the applicable time limit set in 35 U.S.C. 371(b) and PCT Articles 22 and 39(1).
4. [x] A proper Demand for International Preliminary Examination was made by the 19th month from the earliest claimed priority date.
5. [x] A copy of the International Application as filed (35 U.S.C. 371(c)(2))
   a. [ ] is transmitted herewith (required only if not transmitted by the International Bureau).
   b. [x] has been transmitted by the International Bureau.
   c. [ ] is not required, as the application was filed in the United States Receiving Office (RO/US).
6. [ ] A translation of the International Application into English (35 U.S.C. 371(c)(2)).
7. [x] Amendments to the claims of the International Application under PCT Article 19 (35 U.S.C. 371(c)(3))
   a. [ ] are transmitted herewith (required only if not transmitted by the International Bureau).
   b. [ ] have been transmitted by the International Bureau.
   c. [ ] have not been made; however, the time limit for making such amendments has NOT expired.
   d. [x] have not been made and will not be made.
8. [ ] A translation of the amendments to the claims under PCT Article 19 (35 U.S.C. 371(c)(3)).
9. [ ] An oath or declaration of the inventor(s) (35 U.S.C. 371(c)(4)).
10. [ ] A translation of the annexes to the International Preliminary Examination Report under PCT Article 36 (35 U.S.C. 371(c)(5)).

Items 11. to 16. below concern document(s) or information included:

11. [x] An Information Disclosure Statement under 37 CFR 1.97 and 1.98.
12. [ ] An assignment document for recording. A separate cover sheet in compliance with 37 CFR 3.28 and 3.31 is included.
13. [ ] A FIRST preliminary amendment.
    [ ] A SECOND or SUBSEQUENT preliminary amendment.
14. [ ] A substitute specification.
15. [ ] A change of power of attorney and/or address letter.
16. [x] Other items or information:

Courtesy copy of published application
ISR
3 references
IPER w/amended spec. sheets 1-1A, claim sheets 49-57

Note: The claims under consideration are amended claims 1-39, submitted with applicants' letter of January 11, 2000, and which are attached to the courtesy copy of the published application.

SAMSUNG EXHIBIT 1004
Page 117 of 404

534 Rec'd PCT/PTC 14 JUL2000

U.S. APPLICATION NO (If known, see 37 CFR 1.5) 09/600390	INTERNATIONAL APPLICATION NO PCT/EP99/00300	ATTORNEY'S DOCKET NUMBER 20046H-000600US

17. [x] The following fees are submitted:	CALCULATIONS PTO USE ONLY	
BASIC NATIONAL FEE (37 CFR 1.492 (a) (1) - (5)):		
Neither international preliminary examination fee (37 CFR 1.482) nor international search fee (37 CFR 1.445(a)(2)) paid to USPTO and International Search Report not prepared by the EPO or JPO $970.00		
International preliminary examination fee (37 CFR 1.482) not paid to USPTO but International Search Report prepared by the EPO or JPO $840.00		
International preliminary examination fee (37 CFR 1.482) not paid to USPTO but international search fee (37 CFR 1.445(a)(2)) paid to USPTO $760.00		
International preliminary examination fee paid to USPTO (37 CFR 1.482) but all claims did not satisfy provisions of PCT Article 33(1)-(4) $670.00		
International preliminary examination fee paid to USPTO (37 CFR 1.482) and all claims satisfied provisions of PCT Article 33(1)-(4) $96.00		
ENTER APPROPRIATE BASIC FEE AMOUNT =	$840	
Surcharge of $130.00 for furnishing the oath or declaration later than [ ] 20 [ ] 30 months from the earliest claimed priority date (37 CFR 1.492(e)).	$	

CLAIMS	NUMBER FILED	NUMBER EXTRA	RATE		
Total claims	39 - 20 =	+19	X $18.00	$342	
Independent claims	6 - 3 =	+3	X $78.00	$234	
MULTIPLE DEPENDENT CLAIM(S) (if applicable)			+ $260.00	$	
TOTAL OF ABOVE CALCULATIONS =				$1,416	
Reduction of 1/2 for filing by small entity, if applicable. A Small Entity Statement must also by filed (Note 37 CFR 1.9, 1.27, 1.28).				$	
SUBTOTAL =				$	
Processing fee of $130.00 for furnishing the English translation later than [ ] 20 [ ] 30 months from the earliest claimed priority date (37 CFR 1.492(f)). +				$	
TOTAL NATIONAL FEE =				$1,416	
Fee for recording the enclosed assignment (37 CFR 1.21(h)). The assignment must be accompanied by an appropriate cover sheet (37 CFR 3.28, 3.31). $40.00 per property +				$	
TOTAL FEES ENCLOSED =				$1,416	
				Amount to be: refunded	$
				charged	$

a. [ ] A check in the amount of $_____ to cover the above fees is enclosed.

b. [x] Please charge my Deposit Account No. 20-1430 in the amount of $1,416 to cover the above fees. A duplicate copy of this sheet is enclosed.

c. [x] The Commissioner is hereby authorized to charge any additional fees which may be required, or credit any overpayment to Deposit Account No. 20-1430. A duplicate copy of this sheet is enclosed.

NOTE: Where an appropriate time limit under 37 CFR 1.494 or 1.495 has not been met, a petition to revive (37 CFR 1.137(a) or (b)) must be filed and granted to restore the application to pending status.

SEND ALL CORRESPONDENCE TO:
Babak S. Sani
Townsend and Townsend and Crew LLP
Two Embarcadero Center, 8th fl.
San Francisco, CA 94111

SIGNATURE:

Babak S. Sani
NAME

37,495
REGISTRATION NUMBER

SAMSUNG EXHIBIT 1004
Page 118 of 404

424 Rec'd PCT/PTO 14 JUL 2000
09/600390

EXPRESS MAIL NO. EL002037330US

DATE OF DEPOSIT: July 14, 2000

I hereby certify that this is being deposited with the United States Postal Service "Express Mail Post Office to Addressee" service under 37 CFR 1.10 on the date indicated above and is addressed to the Assistant Commissioner of Patents, Washington, D. C. 20231.

By: _____

Attorney Docket No. 20046H-000600US

Enclosures: Form PTO-1390, preliminary amendment, copy of published PCT application, ISR, IDS, 3 references, IPER w/amended spec sheets 1-1A, amended claim sheets 49-57

SF 1115557 v1

CORRECTED VERSION*

600390

PCT

WORLD INTELLECTUAL PROPERTY ORGANIZATION
International Bureau

INTERNATIONAL APPLICATION PUBLISHED UNDER THE PATENT COOPERATION TREATY (PCT)

(51) **International Patent Classification** 6 : **G08B 21/00** — **A1**

(11) **International Publication Number:** **WO 99/36893**

(43) **International Publication Date:** 22 July 1999 (22.07.99)

(21) **International Application Number:** PCT/EP99/00300

(22) **International Filing Date:** 15 January 1999 (15.01.99)

(30) **Priority Data:**

98/00378	15 January 1998 (15.01.98)	FR
PCT/EP98/05383	25 August 1998 (25.08.98)	EP

(63) **Related by Continuation (CON) or Continuation-in-Part (CIP) to Earlier Application**

US PCT/EP98/05383 (CIP)
Filed on 25 August 1998 (25.08.98)

(71) **Applicant** *(for all designated States except US)*: HOLDING B.E.V. S.A. [LU/LU]; 69, route d'Esch, L–Luxembourg (LU).

(71)(72) **Applicants and Inventors:** PIRIM, Patrick [FR/FR]; 56, rue Patay, F–75013 Paris (FR). BINFORD, Thomas [US/US]; 16012 Flintlock Road, Cupertino, CA 95014 (US).

(74) **Agent:** PHELIP, Bruno; Cabinet Harlé & Phélip, 7, rue de Madrid, F–75008 Paris (FR).

(81) **Designated States:** AL, AM, AT, AU, AZ, BA, BB, BG, BR, BY, CA, CH, CN, CU, CZ, DE, DK, EE, ES, FI, GB, GD, GE, GH, GM, HR, HU, ID, IL, IN, IS, JP, KE, KG, KP, KR, KZ, LC, LK, LR, LS, LT, LU, LV, MD, MG, MK, MN, MW, MX, NO, NZ, PL, PT, RO, RU, SD, SE, SG, SI, SK, SL, TJ, TM, TR, TT, UA, UG, US, UZ, VN, YU, ZW, ARIPO patent (GH, GM, KE, LS, MW, SD, SZ, UG, ZW), Eurasian patent (AM, AZ, BY, KG, KZ, MD, RU, TJ, TM), European patent (AT, BE, CH, CY, DE, DK, ES, FI, FR, GB, GR, IE, IT, LU, MC, NL, PT, SE), OAPI patent (BF, BJ, CF, CG, CI, CM, GA, GN, GW, ML, MR, NE, SN, TD, TG).

Published

With international search report.

Before the expiration of the time limit for amending the claims and to be republished in the event of the receipt of amendments.

(54) **Title:** METHOD AND APPARATUS FOR DETECTION OF DROWSINESS

(57) **Abstract**

In a process of detecting a person falling asleep, an image of the face of the person is acquired. Pixels of the image having characteristics corresponding to an eye of the person are selected and a histogram is formed of the selected pixels. The histogram is analyzed over time to identify each opening and closing of the eye, and characteristics indicative of the person falling asleep are determined. A sub–area of the image including the eye may be determined by identifying the head or a facial characteristic of the person, and then identifying the sub–area using an anthropomorphic model. To determine openings and closings of the eyes, histograms of shadowed pixels of the eye are analyzed to determine the width and height of the shadowing, or histograms of movement corresponding to blinking are analyzed. An apparatus for detecting a person falling asleep includes a sensor for acquiring an image of the face of the person, a controller, and a histogram formation unit for forming a histogram on pixels having selected characteristics. Also disclosed is a rear–view mirror assembly incorporating the apparatus.

*(Referred to in PCT Gazette No. 39/1999, Section II)

FOR THE PURPOSES OF INFORMATION ONLY

Codes used to identify States party to the PCT on the front pages of pamphlets publishing international applications under the PCT.

AL	Albania	ES	Spain	LS	Lesotho	SI	Slovenia
AM	Armenia	FI	Finland	LT	Lithuania	SK	Slovakia
AT	Austria	FR	France	LU	Luxembourg	SN	Senegal
AU	Australia	GA	Gabon	LV	Latvia	SZ	Swaziland
AZ	Azerbaijan	GB	United Kingdom	MC	Monaco	TD	Chad
BA	Bosnia and Herzegovina	GE	Georgia	MD	Republic of Moldova	TG	Togo
BB	Barbados	GH	Ghana	MG	Madagascar	TJ	Tajikistan
BE	Belgium	GN	Guinea	MK	The former Yugoslav Republic of Macedonia	TM	Turkmenistan
BF	Burkina Faso	GR	Greece	ML	Mali	TR	Turkey
BG	Bulgaria	HU	Hungary	MN	Mongolia	TT	Trinidad and Tobago
BJ	Benin	IE	Ireland	MR	Mauritania	UA	Ukraine
BR	Brazil	IL	Israel	MW	Malawi	UG	Uganda
BY	Belarus	IS	Iceland	MX	Mexico	US	United States of America
CA	Canada	IT	Italy	NE	Niger	UZ	Uzbekistan
CF	Central African Republic	JP	Japan	NL	Netherlands	VN	Viet Nam
CG	Congo	KE	Kenya	NO	Norway	YU	Yugoslavia
CH	Switzerland	KG	Kyrgyzstan	NZ	New Zealand	ZW	Zimbabwe
CI	Côte d'Ivoire	KP	Democratic People's Republic of Korea	PL	Poland		
CM	Cameroon	KR	Republic of Korea	PT	Portugal		
CN	China	KZ	Kazakstan	RO	Romania		
CU	Cuba	LC	Saint Lucia	RU	Russian Federation		
CZ	Czech Republic	LI	Liechtenstein	SD	Sudan		
DE	Germany	LK	Sri Lanka	SE	Sweden		
DK	Denmark	LR	Liberia	SG	Singapore		
EE	Estonia						

INTERNATIONAL SEARCH REPORT

International Application No
PCT/EP 99/00300

A. CLASSIFICATION OF SUBJECT MATTER
IPC 6 G08B21/00

According to International Patent Classification (IPC) or to both national classification and IPC

B. FIELDS SEARCHED

Minimum documentation searched (classification system followed by classification symbols)
IPC 6 G08B G06T

Documentation searched other than minimum documentation to the extent that such documents are included in the fields searched

Electronic data base consulted during the international search (name of data base and, where practical, search terms used)

C. DOCUMENTS CONSIDERED TO BE RELEVANT

Category °	Citation of document, with indication, where appropriate, of the relevant passages	Relevant to claim No.
X,P	WO 98 05002 A (CARLUS MAGNUS LIMITED ;PIRIM PATRICK (FR)) 5 February 1998 cited in the application see claims 1-14	1-45
A	DE 197 15 519 A (MITSUBISHI MOTORS CORP) 6 November 1997 see the whole document	1-45
A	WO 97 01246 A (STEED VAN P ;CEJKA ROBERT K (US)) 9 January 1997 see abstract	1-45

☐ Further documents are listed in the continuation of box C.

☒ Patent family members are listed in annex.

° Special categories of cited documents :

"A" document defining the general state of the art which is not considered to be of particular relevance

"E" earlier document but published on or after the international filing date

"L" document which may throw doubts on priority claim(s) or which is cited to establish the publication date of another citation or other special reason (as specified)

"O" document referring to an oral disclosure, use, exhibition or other means

"P" document published prior to the international filing date but later than the priority date claimed

"T" later document published after the international filing date or priority date and not in conflict with the application but cited to understand the principle or theory underlying the invention

"X" document of particular relevance; the claimed invention cannot be considered novel or cannot be considered to involve an inventive step when the document is taken alone

"Y" document of particular relevance; the claimed invention cannot be considered to involve an inventive step when the document is combined with one or more other such documents, such combination being obvious to a person skilled in the art.

"&" document member of the same patent family

Date of the actual completion of the international search	Date of mailing of the international search report
28 May 1999	04/06/1999

Name and mailing address of the ISA	Authorized officer
European Patent Office, P.B. 5818 Patentlaan 2 NL - 2280 HV Rijswijk Tel. (+31-70) 340-2040, Tx. 31 651 epo nl, Fax: (+31-70) 340-3016	Sgura, S

1

Form PCT/ISA/210 (second sheet) (July 1992)

INTER ATIONAL SEARCH REPORT

Inform.. ..on on patent family members

International Application No
PCT/EP 99/00300

Patent document cited in search report	Publication date	Patent family member(s)	Publication date
WO 9805002 A	05-02-1998	FR 2751772 A	30-01-1998
		AU 3775397 A	20-02-1998
		EP 0912964 A	06-05-1999
DE 19715519 A	06-11-1997	JP 9277849 A	28-10-1997
		FR 2747346 A	17-10-1997
		US 5786765 A	28-07-1998
WO 9701246 A	09-01-1997	AU 6480896 A	22-01-1997

Form PCT/ISA/210 (patent family annex) (July 1992)

INTERN. ONAL SEARCH REPORT

International Application No
PCT/EP 99/00300

A. CLASSIFICATION OF SUBJECT MATTER
IPC 6 G08B21/00

According to International Patent Classification (IPC) or to both national classification and IPC

B. FIELDS SEARCHED

Minimum documentation searched (classification system followed by classification symbols)
IPC 6 G08B G06T

Documentation searched other than minimum documentation to the extent that such documents are included in the fields searched

Electronic data base consulted during the international search (name of data base and, where practical, search terms used)

C. DOCUMENTS CONSIDERED TO BE RELEVANT

Category °	Citation of document, with indication, where appropriate, of the relevant passages	Relevant to claim No.
X,P	WO 98 05002 A (CARLUS MAGNUS LIMITED ;PIRIM PATRICK (FR)) 5 February 1998 cited in the application see claims 1-14	1-45
A	DE 197 15 519 A (MITSUBISHI MOTORS CORP) 6 November 1997 see the whole document	1-45
A	WO 97 01246 A (STEED VAN P ;CEJKA ROBERT K (US)) 9 January 1997 see abstract	1-45

☐ Further documents are listed in the continuation of box C.

☒ Patent family members are listed in annex.

° Special categories of cited documents :

"A" document defining the general state of the art which is not considered to be of particular relevance

"E" earlier document but published on or after the international filing date

"L" document which may throw doubts on priority claim(s) or which is cited to establish the publication date of another citation or other special reason (as specified)

"O" document referring to an oral disclosure, use, exhibition or other means

"P" document published prior to the international filing date but later than the priority date claimed

"T" later document published after the international filing date or priority date and not in conflict with the application but cited to understand the principle or theory underlying the invention

"X" document of particular relevance; the claimed invention cannot be considered novel or cannot be considered to involve an inventive step when the document is taken alone

"Y" document of particular relevance; the claimed invention cannot be considered to involve an inventive step when the document is combined with one or more other such documents, such combination being obvious to a person skilled in the art.

"&" document member of the same patent family

Date of the actual completion of the international search	Date of mailing of the international search report
28 May 1999	04/06/1999

Name and mailing address of the ISA	Authorized officer
European Patent Office, P.B. 5818 Patentlaan 2 NL - 2280 HV Rijswijk Tel. (+31-70) 340-2040, Tx. 31 651 epo nl, Fax: (+31-70) 340-3016	Sgura, S

Form PCT/ISA/210 (second sheet) (July 1992)

INTERN ONAL SEARCH REPORT

Inform.. ..on on patent family members

ations Application No
PCT/EP 99/00300

Patent document cited in search report	Publication date	Patent family member(s)	Publication date
WO 9805002 A	05-02-1998	FR 2751772 A	30-01-1998
		AU 3775397 A	20-02-1998
		EP 0912964 A	06-05-1999
DE 19715519 A	06-11-1997	JP 9277849 A	28-10-1997
		FR 2747346 A	17-10-1997
		US 5786765 A	28-07-1998
WO 9701246 A	09-01-1997	AU 6480896 A	22-01-1997

SAMSUNG EXHIBIT 1004
Page 125 of 404

16

ATENT COOPERATION TR[illegible]Y

PCT

REC'D 21 FEB 2000
WIPO PCT

INTERNATIONAL PRELIMINARY EXAMINATION REPORT

(PCT Article 36 and Rule 70)

Applicant's or agent's file reference	FOR FURTHER ACTION	See Notification of Transmittal of International Preliminary Examination Report (Form PCT/IPEA/416)
048J PCT 361		
International application No.	International filing date *(day/month/year)*	Priority date *(day/month/year)*
PCT/EP99/00300	15/01/1999	15/01/1998
International Patent Classification (IPC) or national classification and IPC G08B21/00		
Applicant HOLDING B.E.V. SA et al.		

1. This international preliminary examination report has been prepared by this International Preliminary Examining Authority and is transmitted to the applicant according to Article 36.

2. This REPORT consists of a total of 7 sheets, including this cover sheet.

   ☒ This report is also accompanied by ANNEXES, i.e. sheets of the description, claims and/or drawings which have been amended and are the basis for this report and/or sheets containing rectifications made before this Authority (see Rule 70.16 and Section 607 of the Administrative Instructions under the PCT).

   These annexes consist of a total of 11 sheets.

3. This report contains indications relating to the following items:

   - I ☒ Basis of the report
   - II ☒ Priority
   - III ☐ Non-establishment of opinion with regard to novelty, inventive step and industrial applicability
   - IV ☐ Lack of unity of invention
   - V ☒ Reasoned statement under Article 35(2) with regard to novelty, inventive step or industrial applicability; citations and explanations suporting such statement
   - VI ☒ Certain documents cited
   - VII ☒ Certain defects in the international application
   - VIII ☒ Certain observations on the international application

Date of submission of the demand	Date of completion of this report
09/08/1999	17.02.2000
Name and mailing address of the international preliminary examining authority: European Patent Office D-80298 Munich Tel. +49 89 2399 - 0 Tx: 523656 epmu d Fax: +49 89 2399 - 4465	Authorized officer Wright, J Telephone No. +49 89 2399 2705

Form PCT/IPEA/409 (cover sheet) (January 1994)

INTERNATIONAL PRELIMINARY EXAMINATION REPORT

International application No. PCT/EP99/00300

I. Basis of the report

1. This report has been drawn on the basis of (*substitute sheets which have been furnished to the receiving Office in response to an invitation under Article 14 are referred to in this report as "originally filed" and are not annexed to the report since they do not contain amendments.*):

Description, pages:

2-57	as originally filed			
1,1a	as received on	15/01/2000	with letter of	11/01/2000

Claims, No.:

1-39	as received on	15/01/2000	with letter of	11/01/2000

Drawings, sheets:

1/20-20/20	as originally filed

2. The amendments have resulted in the cancellation of:

☐ the description, pages:
☐ the claims, Nos.:
☐ the drawings, sheets:

3. ☐ This report has been established as if (some of) the amendments had not been made, since they have been considered to go beyond the disclosure as filed (Rule 70.2(c)):

4. Additional observations, if necessary:

II. Priority

1. ☐ This report has been established as if no priority had been claimed due to the failure to furnish within the prescribed time limit the requested:

☐ copy of the earlier application whose priority has been claimed.

☐ translation of the earlier application whose priority has been claimed.

2. ☐ This report has been established as if no priority had been claimed due to the fact that the priority claim has been found invalid.

Thus for the purposes of this report, the international filing date indicated above is considered to be the relevant date.

3. Additional observations, if necessary:

see separate sheet

V. Reasoned statement under Article 35(2) with regard to novelty, inventive step or industrial applicability; citations and explanations supporting such statement

1. Statement

Novelty (N)	Yes:	Claims	1-39
	No:	Claims	
Inventive step (IS)	Yes:	Claims	1-39
	No:	Claims	
Industrial applicability (IA)	Yes:	Claims	1-39
	No:	Claims	

2. Citations and explanations

see separate sheet

VI. Certain documents cited

1. Certain published documents (Rule 70.10)

and / or

2. Non-written disclosures (Rule 70.9)

see separate sheet

VII. Certain defects in the international application

The following defects in the form or contents of the international application have been noted:

see separate sheet

VIII. Certain observations on the international application

The following observations on the clarity of the claims, description, and drawings or on the question whether the claims are fully supported by the description, are made:

see separate sheet

1. The following documents will be referred to in this report;

   D1 WO 98/05002 [Carlus Magnus Ltd.] Published 05.02.1998; filed 22.07.1997.
   D2 DE-A-19 715 519 [MITSUBISHI]
   D3 WO-A-97/01246 [STEED]

   The examiner is of the opinion that the priorities claimed are validly claimed.

   Document D1 is published after the first claimed priority, P1 (FR 60 048) of the application but before the second claimed priority, P2 (PCT EP 98/05383).

   As such D1 constitutes prior art within the sense of Rule 64.1 PCT with regard to subject matter which is **not** covered by the priority document P1. The document D1 could constitute a national/regional prior right as indicated in Rule 64.3 PCT, however this is for information of the applicant only and is beyond the scope of the International Examination.

2. In the following discussion, the patentability of the claims will be examined with regard to the requirements of the PCT. In particular, the claims will be examined for novelty, as defined in Art. 33(2) PCT, and for inventive step, as defined in Art. 33(3) PCT. In addition other aspects, such as clarity requirements of Art. 6 PCT, may be discussed as appropriate.

2.1 Conciseness of the claims.

   Art. 6 PCT requires that the claims of the application are concise. This applies not only to individual claims but the overall set of claims, see Guidelines PCT Section IV-III-5.

   In the present case the examiner is of the opinion that the independent claims 1, 3,7,9,14,39 constitute an unreasonably large number of independent claims which could better be claimed in the form of one or two claims per category with the remaining features claimed as independent claims.

2.2 Independent Claims, Claims 1,3,7,9,14,39

Claims 1,3,7,9,14,39 all differ from the prior art in that they include at least one identification of a sub area of an image using an anthropomorphic model of one kind or another.

The closest prior art to the application is considered to be that disclosed in D2. Whilst D2 discloses for example at col. 3, lines 19-33 to monitor an area of the face including the eyes, there is not disclosed in D2 to "identify" a sub area of an image including the eyes or the corresponding method of "selecting pixels" of the image having characteristics corresponding to a facial characteristic using an anthropomorphic model (claims 1,3) or one of the kinds of anthropomorphic models given in the other independent claims.

The examiner is of the opinion that it the person skilled in the art, presented with the teaching of D2 alone or in combination with other available prior art would not arrive at the subject matter of "identifying" a sub area or "selecting pixels" based on the models given, rather it would appear from the teaching of D2 that the apparatus only looks at the eyes and then monitors movement. Whilst the blinking rate is compared to an anthropomorphic model in D2 this is for the purpose of recognising drowsiness of the driver and not to identify a particular area of the face.

2.3 The remaining dependent claims would appear to be allowable under Art. 33(3) PCT since they refer to allowable claims.

2.4 Clarity of the claims, Art. 6 PCT.

In order to satisfy the requirements of Rule 6.2 B reference signs in the claims should be placed in parenthesis. This applies to all references including "V", page 52, first line.

Conversely, the examiner notes that other expressions placed in brackets are likely to be interpreted as being references falling under Rule 6.2B. In the case of the expression "(328x) or (328y) etc.", appearing in claims 1,2,3,7 and 9 the

claims are rendered unclear. The claims should have been clarified to remove these terms from brackets.

The terms "DP" and "CO" in claims 10 and 23 are not defined in the claims and therefore render the scope of these claims unclear, Art. 6 PCT.

3. In the following section, certain defects in the International Application will be noted.

The description should have been brought into conformity with the claims placed on file in accordance with the Rule 51 a iii PCT.

PCT/EP-99/00300
048 J PCT 361
January 11, 2000

METHOD AND APPARATUS FOR DETECTION OF DROWSINESS

Inventors: Dr. Patrick Pirim
Dr. Thomas Binford

BACKGROUND OF THE INVENTION

1. Field of the Invention.

The present invention relates generally to an image processing system, and more particularly to the use of a generic image processing system to detect drowsiness.

1. Description of the Related Art.

It is well known that a significant number of highway accidents result from drivers becoming drowsy or falling asleep, which results in many deaths and injuries. Drowsiness is also a problem in other fields, such as for airline pilots and power plant operators, in which great damage may result from failure to stay alert.

A number of different physical criteria may be used to establish when a person is drowsy, including a change in the duration and interval of eye blinking. Normally, the duration of blinking is about 100 to 200 ms when awake and about 500 to 800 ms when drowsy. The time interval between successive blinks is generally constant while awake, but varies within a relatively broad range when drowsy.

Numerous devices have been proposed to detect drowsiness of drivers. Such devices are shown, for example, in U.S. Patent Nos. 5,841,354; 5,813,99; 5,689,241; 5,684,461; 5,682,144; 5,469,143; 5,402,109; 5,353,013; 5,195,606; 4,928,090; 4,555,697; 4,485,375; and 4,259,665. In general, these devices fall into three categories: i) devices that detect movement of the head of the driver, e.g., tilting; ii) devices that detect a physiological change in the driver, e.g., altered heartbeat or breathing, and iii) devices that detect a physical result of the driver falling asleep, e.g., a reduced grip on the steering wheel. None of these devices is believed to have met with commercial success.

SAMSUNG EXHIBIT 1004
Page 133 of 404

The German patent application DE-19715515 and the corresponding French patent application FR-2.747.346 disclose an apparatus and a process of evaluation of drowsiness level of a driver using a video camera placed near the feet of the driver and a processing unit for the camera image with a software detecting the blinks of the eyes determining the time gap between the beginning and the end of the blink. More particularly, a unit 10 of the processor realizes :

- a memorization of the video image and its treatment, so as to determine an area comprising the driver's eyes,
- the detection of the time gap between the closing of the driver eyelids and their full opening and
- a treatment in a memory 11 and a processor 22 in combination with unit 10 to calculate a ratio of slow blink apparition.

The object of the international patent application published WO-97/01246 is a security system comprising a video camera placed within the rear-view mirror of a car and a video screen remotely disposed for the analysis of what is happening in the car and around it, as well as of what happened due to the recording of the output video signal of the camera. This is in fact a concealed camera (within the rear-view mirror), so that it is imperceptible to vandals and thieves and which observes a large scope including the inside of the car and its surroundings, the record allowing one to know later what has happened in this scope (page 6, lines 13 to 19), this is not a detector whose effective angle is strictly limited to the car driver face in order to detect its eventual drowsiness and to make him awake.

Commonly-owned PCT Application Serial Nos. PCT/FR97/01354 and PCT/EP98/05383 disclose a generic image processing system that operates to localize

SAMSUNG EXHIBIT 1004
Page 134 of 404

CLAIMS

1. A process of detecting a person falling asleep, the process comprising the steps of:

acquiring an image of the face (V) of the person;

selecting pixels of the image having characteristics corresponding to characteristics of at least one eye of the person;

forming at least one histogram (328x) of the selected pixels;

analyzing the at least one histogram (328x) over time to identify each opening and closing of the eye; and

determining from the opening and closing information on the eye, characteristics indicative of a person falling asleep;

identifying a sub-area of the image comprising the at least one eye prior to the step of selecting pixels of the image having characteristics corresponding to characteristics of at least one eye, this step of selecting pixels comprising selecting pixels within the sub-area of the image, comprising the steps of:

identifying the head of the person in the image; and

identifying the sub-area of the image using an anthropomorphic model.

2. The process according to claim 1 wherein the step of identifying head of the person in the image comprises the steps of:

selecting pixels of the image having characteristics corresponding to edges of the head of the person;

forming histograms (328x, 328y) of the selected pixels projected onto orthogonal axes; and

analyzing the histograms of the selected pixels to identify the edges of the head of the person.

3. The process of detecting a person falling asleep, the process

SAMSUNG EXHIBIT 1004
Page 135 of 404

comprising the steps of:

acquiring an image of the face V of the person;

selecting pixels of the image having characteristics corresponding to characteristics of at least one eye of the person;

forming at least one histogram (328x) of the selected pixels;

analyzing the at least one histogram over time to identify each opening and closing of the eye; and

determining from the opening and closing information on the eye, characteristics indicative of a person falling asleep;

identifying a sub-area of the image comprising the at least one eye prior to the step of selecting pixels of the image having characteristics corresponding to characteristics of at least one eye, and wherein the step of selecting pixels of the image having characteristics corresponding to characteristics of at least one eye comprises selecting pixels within the sub-area of the image;

identifying the location of a facial characteristic of the person in the image; and

identifying the sub-area of the image using an anthropomorphic model and the location of the facial characteristic.

4. The process according to claim 3 wherein the step of identifying the location of a facial characteristic of the person in the image comprises the steps of:

selecting pixels of the image having characteristics corresponding to the facial characteristic;

forming histograms of the selected pixels projected onto orthogonal axes; and

analyzing the histograms of the selected pixels to identify the position of the facial characteristic in the image.

5. The process according to claim 4 wherein the facial characteristic is the nostrils of the person, and wherein the step of selecting pixels of the image having characteristics corresponding to the facial characteristic comprises selecting

pixels having low luminance levels.

6. The process according to claim 5 further comprising the step of analyzing the histograms of the nostril pixels to determine whether the spacing between the nostrils is within a desired range and whether the dimensions of the nostrils fall within a desired range.

7. The process of detecting a person falling asleep, the process comprising the steps of:

acquiring an image of the face (V) of the person;

selecting pixels of the image having characteristics corresponding to characteristics of at least one eye of the person;

forming at least one histogram (328x) of the selected pixels;

analyzing the at least one histogram over time to identify each opening and closing of the eye; and

determining from the opening and closing information on the eye, characteristics indicative of a person falling asleep;

the step of selecting pixels of the image having characteristics corresponding to characteristics of at least one eye of the person comprises selecting pixels having low luminance levels corresponding to shadowing of the eye; and

wherein the step analyzing the at least one histogram over time to identify each opening and closing of the eye comprises analyzing the shape of the eye shadowing to determine openings and closings of the eye.

8. The process according to claim 7 wherein the step of forming at least one histogram of the selected pixels comprises forming histograms of shadowed pixels of the eye projected onto orthogonal axes, and wherein the step of analyzing the shape of the eye shadowing comprises analyzing the width and height of the shadowing.

9. The process of detecting a person falling asleep, the process comprising the steps of:

SAMSUNG EXHIBIT 1004
Page 137 of 404

acquiring an image of the face V of the person;

selecting pixels of the image having characteristics corresponding to characteristics of at least one eye of the person;

forming at least one histogram (328x) of the selected pixels;

analyzing the at least one histogram over time to identify each opening and closing of the eye; and

determining from the opening and closing information on the eye, characteristics indicative of a person falling asleep;

the step of selecting pixels of the image having characteristics corresponding to characteristics of at least one eye of the person comprises selecting pixels in movement corresponding to blinking; and

wherein the step analyzing the at least one histogram over time to identify each opening and closing of the eye comprises analyzing the number of pixels in movement over time to determine openings and closings of the eye.

10. The process according to claim 9 wherein the step of selecting pixels of the image having characteristics corresponding to characteristics of at least one eye of the person comprises selecting having characteristics selected from the group consisting of i) DP=1, ii) CO indicative of a blinking eyelid, iii) velocity indicative of a blinking eyelid, and iv) up and down movement indicative of a blinking eyelid.

11. The process according to claim 3 wherein the step of identifying a facial characteristic of the person in the image comprises the step of searching sub-images of the image to identify the facial characteristic.

12. The process according to claim 5 wherein the step of identifying a facial characteristic of the person in the image comprises the step of searching sub-images of the image to identify the nostrils.

13. The process according to claim 11 wherein the facial characteristic is a first facial characteristic and further comprising the steps of:

using an anthropomorphic model and the location of the first facial

characteristic to select a sub-area of the image containing a second facial characteristic;

selecting pixels of the image having characteristics corresponding to the second facial characteristic; and

analyzing the histograms of the selected pixels of the second facial characteristic to confirm the identification of the first facial characteristic.

14. An apparatus for detecting a person falling asleep, the apparatus comprising:

a sensor for acquiring an image of the face of the person, the image comprising pixels corresponding to the eye of the person;

a controller; and

a histogram formation unit for forming a histogram on pixels having selected characteristics,

the controller controlling the histogram formation unit to select pixels of the image having characteristics corresponding to characteristics of at least one eye of the person and to form a histogram of the selected pixels, the controller analyzing the histogram over time to identify each opening and closing of the eye, and determining from the opening and closing information on the eye, characteristics indicative of a person falling asleep;

the controller interacting with the histogram formation unit to identify a sub-area of the image comprising the at least one eye, and the controller controls the histogram formation unit to select pixels of the image having characteristics corresponding to characteristics of at least one eye only within the sub-area of the image;

the controller interacting with the histogram formation unit to identify the head of the person in the image; and

the controller identifies the sub-area of the image using an anthropomorphic model.

15. The apparatus according to claim 14 wherein:

SAMSUNG EXHIBIT 1004
Page 139 of 404

the histogram formation unit selects pixels of the image having characteristics corresponding to edges of the head of the person and forms histograms of the selected pixels projected onto orthogonal axes; and

the controller analyzes the histograms of the selected pixels to identify the edges of the head of the person.

16. The apparatus according to claim 14 wherein:

the controller interacts with the histogram formation unit to identify the location of a facial characteristic of the person in the image; and

the controller identifies the sub-area of the image using an anthropomorphic model and the location of the facial characteristic.

17. The apparatus according to claim 16 wherein:

the histogram formation unit selects pixels of the image having characteristics corresponding to the facial characteristic and forms histograms of the selected pixels projected onto orthogonal axes;

the controller analyzes the histograms of the selected pixels to identify the position of the facial characteristic in the image.

18. The apparatus according to claim 17 wherein the facial characteristic is the nostrils of the person, and wherein the histogram formation unit selects pixels of the image having low luminance levels corresponding to the luminance level of the nostrils.

19. The apparatus according to claim 18 wherein the controller analyzes the histograms of the nostril pixels to determine whether the spacing between the nostrils is within a desired range and whether the dimensions of the nostrils fall within a desired range.

20. The apparatus according to claim 14 wherein:

the histogram formation unit selects pixels of the image having low luminance levels corresponding to shadowing of the eye; and

wherein the controller analyzes the shape of the eye shadowing to determine openings and closings of the eye.

SAMSUNG EXHIBIT 1004
Page 140 of 404

21. The apparatus according to claim 20 wherein histogram formation unit forms histograms of shadowed pixels of the eye projected onto orthogonal axes, and wherein the controller analyzes the width and height of the shadowing to determine openings and closings of the eye.

22. The apparatus according to claim 14 wherein:

the histogram formation unit selects pixels of the image in movement corresponding to blinking; and

the controller analyzes the number of pixels in movement over time to determine openings and closings of the eye.

23. The apparatus according to claim 22 wherein the histogram formation units selects pixels of the image having characteristics of movement corresponding to blinking, such characteristics being selected from the group consisting of i) DP=1, ii) CO indicative of a blinking eyelid, iii) velocity indicative of a blinking eyelid, and iv) up and down movement indicative of a blinking eyelid.

24. The apparatus according to claim 16 wherein the controller interacts with the histogram formation unit to search sub-images of the image to identify the facial characteristic.

25. The apparatus according to claim 18 wherein the controller interacts with the histogram formation unit to search sub-images of the image to identify the nostrils.

26. The apparatus according to claim 24 wherein the facial characteristic is a first facial characteristic and further comprising:

the controller using an anthropomorphic model and the location of the first facial characteristic to cause the histogram formation unit to select a sub-area of the image containing a second facial characteristic, the histogram formation unit selecting pixels of the image in the sub-area having characteristics corresponding to the second facial characteristic and forming a histogram of such pixels; and

the controller analyzing the histogram of the selected pixels

SAMSUNG EXHIBIT 1004
Page 141 of 404

corresponding to the second facial characteristic to confirm the identification of the first facial characteristic.

27. The apparatus according to claim 14 wherein the sensor is integrally constructed with the controller and the histogram formation unit.

28. The apparatus according to claim 14 further comprising an alarm, the controller operating the alarm upon detection of the person falling asleep.

29. The apparatus according to claim 14 further comprising an illumination source, the sensor being adapted to view the person when illuminated by the illumination source.

30. The apparatus according to claim 29 wherein the illumination source is a source of IR radiation.

31. A rear-view mirror assembly for a vehicle which comprises:

a rear-view mirror; and

the apparatus according to claim 14 mounted to the rear-view mirror.

32. The rear-view mirror assembly according to claim 31 further comprising a bracket attaching the apparatus to the rear-view mirror.

33. The rear-view mirror assembly according to claim 31 further comprising a housing having an open side and an interior, the rear-view mirror being mounted to the open side of the housing, the rear view mirror being see-through from the interior of the housing to an exterior of the housing, the apparatus being mounted interior to the housing with the sensor directed toward the rear-view mirror.

34. The rear-view mirror assembly according to claim 33 further comprising a joint attaching the apparatus to the rear-view mirror assembly, the joint adapted to maintain the apparatus in a position facing a driver of the vehicle during adjustment of the mirror assembly by the driver.

35. The rear-view mirror assembly according to claim 31 further comprising a source of illumination directed toward the person, the sensor being

adapted to view the person when illuminated by the source of illumination.

36. The rear-view mirror assembly according to claim 31 further comprising an alarm, the controller operating the alarm upon detection of the person falling asleep.

37. A rear-view mirror assembly which comprises:

a rear-view mirror; and

the apparatus according to claim 14, the sensor being mounted to the rear-view mirror, the controller and the histogram formation unit being located remote from the sensor.

38. A vehicle comprising the apparatus according to claim 14.

39. A process of detecting a feature of an eye, the process comprising the steps of:

acquiring an image of the face of the person, the image comprising pixels corresponding to the feature to be detected;

selecting pixels of the image having characteristics corresponding to the feature to be detected;

forming at least one histogram of the selected pixels;

analyzing the at least one histogram over time to identify characteristics indicative of the feature to be detected.

said feature being the iris, pupil or cornea.

TENT COOPERATION TRE Y

PCT

INTERNATIONAL PRELIMINARY EXAMINATION REPORT

(PCT Article 36 and Rule 70)

Applicant's or agent's file reference	FOR FURTHER ACTION	See Notification of Transmittal of International Preliminary Examination Report (Form PCT/IPEA/416)
048J PCT 361		
International application No.	International filing date *(day/month/year)*	Priority date *(day/month/year)*
PCT/EP99/00300	15/01/1999	15/01/1998
International Patent Classification (IPC) or national classification and IPC		
G08B21/00		
Applicant		
HOLDING B.E.V. SA et al.		

1. This international preliminary examination report has been prepared by this International Preliminary Examining Authority and is transmitted to the applicant according to Article 36.

2. This REPORT consists of a total of 7 sheets, including this cover sheet.

   ☒ This report is also accompanied by ANNEXES, i.e. sheets of the description, claims and/or drawings which have been amended and are the basis for this report and/or sheets containing rectifications made before this Authority (see Rule 70.16 and Section 607 of the Administrative Instructions under the PCT).

   These annexes consist of a total of 11 sheets.

3. This report contains indications relating to the following items:

   - I ☒ Basis of the report
   - II ☒ Priority
   - III ☐ Non-establishment of opinion with regard to novelty, inventive step and industrial applicability
   - IV ☐ Lack of unity of invention
   - V ☒ Reasoned statement under Article 35(2) with regard to novelty, inventive step or industrial applicability; citations and explanations suporting such statement
   - VI ☒ Certain documents cited
   - VII ☒ Certain defects in the international application
   - VIII ☒ Certain observations on the international application

Date of submission of the demand	Date of completion of this report
09/08/1999	17.02.2000
Name and mailing address of the international preliminary examining authority: European Patent Office D-80298 Munich Tel. +49 89 2399 - 0 Tx: 523656 epmu d Fax: +49 89 2399 - 4465	Authorized officer Wright, J Telephone No. +49 89 2399 2705

Form PCT/IPEA/409 (cover sheet) (January 1994)

INTERNATIONAL PRELIMINARY EXAMINATION REPORT

International application No. PCT/EP99/00300

I. Basis of the report

1. This report has been drawn on the basis of (*substitute sheets which have been furnished to the receiving Office in response to an invitation under Article 14 are referred to in this report as "originally filed" and are not annexed to the report since they do not contain amendments.*):

Description, pages:

2-57	as originally filed			
1,1a	as received on	15/01/2000	with letter of	11/01/2000

Claims, No.:

1-39	as received on	15/01/2000	with letter of	11/01/2000

Drawings, sheets:

1/20-20/20	as originally filed

2. The amendments have resulted in the cancellation of:

- ☐ the description, pages:
- ☐ the claims, Nos.:
- ☐ the drawings, sheets:

3. ☐ This report has been established as if (some of) the amendments had not been made, since they have been considered to go beyond the disclosure as filed (Rule 70.2(c)):

4. Additional observations, if necessary:

II. Priority

1. ☐ This report has been established as if no priority had been claimed due to the failure to furnish within the prescribed time limit the requested:

   ☐ copy of the earlier application whose priority has been claimed.

   ☐ translation of the earlier application whose priority has been claimed.

2. ☐ This report has been established as if no priority had been claimed due to the fact that the priority claim has been found invalid.

Thus for the purposes of this report, the international filing date indicated above is considered to be the relevant date.

3. Additional observations, if necessary:

see separate sheet

V. Reasoned statement under Article 35(2) with regard to novelty, inventive step or industrial applicability; citations and explanations supporting such statement

1. Statement

Novelty (N)	Yes:	Claims	1-39
	No:	Claims	
Inventive step (IS)	Yes:	Claims	1-39
	No:	Claims	
Industrial applicability (IA)	Yes:	Claims	1-39
	No:	Claims	

2. Citations and explanations

see separate sheet

VI. Certain documents cited

1. Certain published documents (Rule 70.10)

and / or

2. Non-written disclosures (Rule 70.9)

see separate sheet

VII. Certain defects in the international application

The following defects in the form or contents of the international application have been noted:

see separate sheet

VIII. Certain observations on the international application

The following observations on the clarity of the claims, description, and drawings or on the question whether the claims are fully supported by the description, are made:

see separate sheet

1. The following documents will be referred to in this report;

D1 WO 98/05002 [Carlus Magnus Ltd.] Published 05.02.1998; filed 22.07.1997.
D2 DE-A-19 715 519 [MITSUBISHI]
D3 WO-A-97/01246 [STEED]

The examiner is of the opinion that the priorities claimed are validly claimed.

Document D1 is published after the first claimed priority, P1 (FR 60 048) of the application but before the second claimed priority, P2 (PCT EP 98/05383).

As such D1 constitutes prior art within the sense of Rule 64.1 PCT with regard to subject matter which is **not** covered by the priority document P1. The document D1 could constitute a national/regional prior right as indicated in Rule 64.3 PCT, however this is for information of the applicant only and is beyond the scope of the International Examination.

2. In the following discussion, the patentability of the claims will be examined with regard to the requirements of the PCT. In particular, the claims will be examined for novelty, as defined in Art. 33(2) PCT, and for inventive step, as defined in Art. 33(3) PCT. In addition other aspects, such as clarity requirements of Art. 6 PCT, may be discussed as appropriate.

2.1 Conciseness of the claims.

Art. 6 PCT requires that the claims of the application are concise. This applies not only to individual claims but the overall set of claims, see Guidelines PCT Section IV-III-5.

In the present case the examiner is of the opinion that the independent claims 1, 3,7,9,14,39 constitute an unreasonably large number of independent claims which could better be claimed in the form of one or two claims per category with the remaining features claimed as independent claims.

2.2 Independent Claims, Claims 1,3,7,9,14,39

Claims 1,3,7,9,14,39 all differ from the prior art in that they include at least one identification of a sub area of an image using an anthropomorphic model of one kind or another.

The closest prior art to the application is considered to be that disclosed in D2. Whilst D2 discloses for example at col. 3, lines 19-33 to monitor an area of the face including the eyes, there is not disclosed in D2 to "identify" a sub area of an image including the eyes or the corresponding method of "selecting pixels" of the image having characteristics corresponding to a facial characteristic using an anthropomorphic model (claims 1,3) or one of the kinds of anthropomorphic models given in the other independent claims.

The examiner is of the opinion that it the person skilled in the art, presented with the teaching of D2 alone or in combination with other available prior art would not arrive at the subject matter of "identifying" a sub area or "selecting pixels" based on the models given, rather it would appear from the teaching of D2 that the apparatus only looks at the eyes and then monitors movement. Whilst the blinking rate is compared to an anthropomorphic model in D2 this is for the purpose of recognising drowsiness of the driver and not to identify a particular area of the face.

2.3 The remaining dependent claims would appear to be allowable under Art. 33(3) PCT since they refer to allowable claims.

2.4 Clarity of the claims, Art. 6 PCT.

In order to satisfy the requirements of Rule 6.2 B reference signs in the claims should be placed in parenthesis. This applies to all references including "V", page 52, first line.

Conversely, the examiner notes that other expressions placed in brackets are likely to be interpreted as being references falling under Rule 6.2B. In the case of the expression "(328x) or (328y) etc.", appearing in claims 1,2,3,7 and 9 the

claims are rendered unclear. The claims should have been clarified to remove these terms from brackets.

The terms "DP" and "CO" in claims 10 and 23 are not defined in the claims and therefore render the scope of these claims unclear, Art. 6 PCT.

3. In the following section, certain defects in the International Application will be noted.

The description should have been brought into conformity with the claims placed on file in accordance with the Rule 51 a iii PCT.

PCT/EP-99/00300
048 J PCT 361
January 11, 2000

METHOD AND APPARATUS FOR DETECTION OF DROWSINESS

Inventors: Dr. Patrick Pirim
Dr. Thomas Binford

BACKGROUND OF THE INVENTION

1. Field of the Invention.

The present invention relates generally to an image processing system, and more particularly to the use of a generic image processing system to detect drowsiness.

1. Description of the Related Art.

It is well known that a significant number of highway accidents result from drivers becoming drowsy or falling asleep, which results in many deaths and injuries. Drowsiness is also a problem in other fields, such as for airline pilots and power plant operators, in which great damage may result from failure to stay alert.

A number of different physical criteria may be used to establish when a person is drowsy, including a change in the duration and interval of eye blinking. Normally, the duration of blinking is about 100 to 200 ms when awake and about 500 to 800 ms when drowsy. The time interval between successive blinks is generally constant while awake, but varies within a relatively broad range when drowsy.

Numerous devices have been proposed to detect drowsiness of drivers. Such devices are shown, for example, in U.S. Patent Nos. 5,841,354; 5,813,99; 5,689,241; 5,684,461; 5,682,144; 5,469,143; 5,402,109; 5,353,013; 5,195,606; 4,928,090; 4,555,697; 4,485,375; and 4,259,665. In general, these devices fall into three categories: i) devices that detect movement of the head of the driver, e.g., tilting; ii) devices that detect a physiological change in the driver, e.g., altered heartbeat or breathing, and iii) devices that detect a physical result of the driver falling asleep, e.g., a reduced grip on the steering wheel. None of these devices is believed to have met with commercial success.

SAMSUNG EXHIBIT 1004
Page 151 of 404

The German patent application DE-19715515 and the corresponding French patent application FR-2.747.346 disclose an apparatus and a process of evaluation of drowsiness level of a driver using a video camera placed near the feet of the driver and a processing unit for the camera image with a software detecting the blinks of the eyes determining the time gap between the beginning and the end of the blink. More particularly, a unit 10 of the processor realizes :

- a memorization of the video image and its treatment, so as to determine an area comprising the driver's eyes,
- the detection of the time gap between the closing of the driver eyelids and their full opening and
- a treatment in a memory 11 and a processor 22 in combination with unit 10 to calculate a ratio of slow blink apparition.

The object of the international patent application published WO-97/01246 is a security system comprising a video camera placed within the rear-view mirror of a car and a video screen remotely disposed for the analysis of what is happening in the car and around it, as well as of what happened due to the recording of the output video signal of the camera. This is in fact a concealed camera (within the rear-view mirror), so that it is imperceptible to vandals and thieves and which observes a large scope including the inside of the car and its surroundings, the record allowing one to know later what has happened in this scope (page 6, lines 13 to 19), this is not a detector whose effective angle is strictly limited to the car driver face in order to detect its eventual drowsiness and to make him awake.

Commonly-owned PCT Application Serial Nos. PCT/FR97/01354 and PCT/EP98/05383 disclose a generic image processing system that operates to localize

SAMSUNG EXHIBIT 1004
Page 152 of 404

CLAIMS

1. A process of detecting a person falling asleep, the process comprising the steps of:

acquiring an image of the face (V) of the person;

selecting pixels of the image having characteristics corresponding to characteristics of at least one eye of the person;

forming at least one histogram (328x) of the selected pixels;

analyzing the at least one histogram (328x) over time to identify each opening and closing of the eye; and

determining from the opening and closing information on the eye, characteristics indicative of a person falling asleep;

identifying a sub-area of the image comprising the at least one eye prior to the step of selecting pixels of the image having characteristics corresponding to characteristics of at least one eye, this step of selecting pixels comprising selecting pixels within the sub-area of the image, comprising the steps of:

identifying the head of the person in the image; and

identifying the sub-area of the image using an anthropomorphic model.

2. The process according to claim 1 wherein the step of identifying head of the person in the image comprises the steps of:

selecting pixels of the image having characteristics corresponding to edges of the head of the person;

forming histograms (328x, 328y) of the selected pixels projected onto orthogonal axes; and

analyzing the histograms of the selected pixels to identify the edges of the head of the person.

3. The process of detecting a person falling asleep, the process

SAMSUNG EXHIBIT 1004
Page 153 of 404

PCT/EP-99/00300
048 J PCT 361
January 11, 2000

comprising the steps of:

acquiring an image of the face V of the person;

selecting pixels of the image having characteristics corresponding to characteristics of at least one eye of the person;

forming at least one histogram (328x) of the selected pixels;

analyzing the at least one histogram over time to identify each opening and closing of the eye; and

determining from the opening and closing information on the eye, characteristics indicative of a person falling asleep;

identifying a sub-area of the image comprising the at least one eye prior to the step of selecting pixels of the image having characteristics corresponding to characteristics of at least one eye, and wherein the step of selecting pixels of the image having characteristics corresponding to characteristics of at least one eye comprises selecting pixels within the sub-area of the image;

identifying the location of a facial characteristic of the person in the image; and

identifying the sub-area of the image using an anthropomorphic model and the location of the facial characteristic.

4. The process according to claim 3 wherein the step of identifying the location of a facial characteristic of the person in the image comprises the steps of:

selecting pixels of the image having characteristics corresponding to the facial characteristic;

forming histograms of the selected pixels projected onto orthogonal axes; and

analyzing the histograms of the selected pixels to identify the position of the facial characteristic in the image.

5. The process according to claim 4 wherein the facial characteristic is the nostrils of the person, and wherein the step of selecting pixels of the image having characteristics corresponding to the facial characteristic comprises selecting

pixels having low luminance levels.

6. The process according to claim 5 further comprising the step of analyzing the histograms of the nostril pixels to determine whether the spacing between the nostrils is within a desired range and whether the dimensions of the nostrils fall within a desired range.

7. The process of detecting a person falling asleep, the process comprising the steps of:

acquiring an image of the face (V) of the person;

selecting pixels of the image having characteristics corresponding to characteristics of at least one eye of the person;

forming at least one histogram (328x) of the selected pixels;

analyzing the at least one histogram over time to identify each opening and closing of the eye; and

determining from the opening and closing information on the eye, characteristics indicative of a person falling asleep;

the step of selecting pixels of the image having characteristics corresponding to characteristics of at least one eye of the person comprises selecting pixels having low luminance levels corresponding to shadowing of the eye; and

wherein the step analyzing the at least one histogram over time to identify each opening and closing of the eye comprises analyzing the shape of the eye shadowing to determine openings and closings of the eye.

8. The process according to claim 7 wherein the step of forming at least one histogram of the selected pixels comprises forming histograms of shadowed pixels of the eye projected onto orthogonal axes, and wherein the step of analyzing the shape of the eye shadowing comprises analyzing the width and height of the shadowing.

9. The process of detecting a person falling asleep, the process comprising the steps of:

SAMSUNG EXHIBIT 1004
Page 155 of 404

acquiring an image of the face V of the person;

selecting pixels of the image having characteristics corresponding to characteristics of at least one eye of the person;

forming at least one histogram (328x) of the selected pixels;

analyzing the at least one histogram over time to identify each opening and closing of the eye; and

determining from the opening and closing information on the eye, characteristics indicative of a person falling asleep;

the step of selecting pixels of the image having characteristics corresponding to characteristics of at least one eye of the person comprises selecting pixels in movement corresponding to blinking; and

wherein the step analyzing the at least one histogram over time to identify each opening and closing of the eye comprises analyzing the number of pixels in movement over time to determine openings and closings of the eye.

10. The process according to claim 9 wherein the step of selecting pixels of the image having characteristics corresponding to characteristics of at least one eye of the person comprises selecting having characteristics selected from the group consisting of i) DP=1, ii) CO indicative of a blinking eyelid, iii) velocity indicative of a blinking eyelid, and iv) up and down movement indicative of a blinking eyelid.

11. The process according to claim 3 wherein the step of identifying a facial characteristic of the person in the image comprises the step of searching sub-images of the image to identify the facial characteristic.

12. The process according to claim 5 wherein the step of identifying a facial characteristic of the person in the image comprises the step of searching sub-images of the image to identify the nostrils.

13. The process according to claim 11 wherein the facial characteristic is a first facial characteristic and further comprising the steps of:

using an anthropomorphic model and the location of the first facial

PCT/EP-99/00300
048 J PCT 361
January 11, 2000

characteristic to select a sub-area of the image containing a second facial characteristic;

selecting pixels of the image having characteristics corresponding to the second facial characteristic; and

analyzing the histograms of the selected pixels of the second facial characteristic to confirm the identification of the first facial characteristic.

14. An apparatus for detecting a person falling asleep, the apparatus comprising:

a sensor for acquiring an image of the face of the person, the image comprising pixels corresponding to the eye of the person;

a controller; and

a histogram formation unit for forming a histogram on pixels having selected characteristics,

the controller controlling the histogram formation unit to select pixels of the image having characteristics corresponding to characteristics of at least one eye of the person and to form a histogram of the selected pixels, the controller analyzing the histogram over time to identify each opening and closing of the eye, and determining from the opening and closing information on the eye, characteristics indicative of a person falling asleep;

the controller interacting with the histogram formation unit to identify a sub-area of the image comprising the at least one eye, and the controller controls the histogram formation unit to select pixels of the image having characteristics corresponding to characteristics of at least one eye only within the sub-area of the image;

the controller interacting with the histogram formation unit to identify the head of the person in the image; and

the controller identifies the sub-area of the image using an anthropomorphic model.

15. The apparatus according to claim 14 wherein:

SAMSUNG EXHIBIT 1004
Page 157 of 404

the histogram formation unit selects pixels of the image having characteristics corresponding to edges of the head of the person and forms histograms of the selected pixels projected onto orthogonal axes; and

the controller analyzes the histograms of the selected pixels to identify the edges of the head of the person.

16. The apparatus according to claim 14 wherein:

the controller interacts with the histogram formation unit to identify the location of a facial characteristic of the person in the image; and

the controller identifies the sub-area of the image using an anthropomorphic model and the location of the facial characteristic.

17. The apparatus according to claim 16 wherein:

the histogram formation unit selects pixels of the image having characteristics corresponding to the facial characteristic and forms histograms of the selected pixels projected onto orthogonal axes;

the controller analyzes the histograms of the selected pixels to identify the position of the facial characteristic in the image.

18. The apparatus according to claim 17 wherein the facial characteristic is the nostrils of the person, and wherein the histogram formation unit selects pixels of the image having low luminance levels corresponding to the luminance level of the nostrils.

19. The apparatus according to claim 18 wherein the controller analyzes the histograms of the nostril pixels to determine whether the spacing between the nostrils is within a desired range and whether the dimensions of the nostrils fall within a desired range.

20. The apparatus according to claim 14 wherein:

the histogram formation unit selects pixels of the image having low luminance levels corresponding to shadowing of the eye; and

wherein the controller analyzes the shape of the eye shadowing to determine openings and closings of the eye.

21. The apparatus according to claim 20 wherein histogram formation unit forms histograms of shadowed pixels of the eye projected onto orthogonal axes, and wherein the controller analyzes the width and height of the shadowing to determine openings and closings of the eye.

22. The apparatus according to claim 14 wherein:

the histogram formation unit selects pixels of the image in movement corresponding to blinking; and

the controller analyzes the number of pixels in movement over time to determine openings and closings of the eye.

23. The apparatus according to claim 22 wherein the histogram formation units selects pixels of the image having characteristics of movement corresponding to blinking, such characteristics being selected from the group consisting of i) DP=1, ii) CO indicative of a blinking eyelid, iii) velocity indicative of a blinking eyelid, and iv) up and down movement indicative of a blinking eyelid.

24. The apparatus according to claim 16 wherein the controller interacts with the histogram formation unit to search sub-images of the image to identify the facial characteristic.

25. The apparatus according to claim 18 wherein the controller interacts with the histogram formation unit to search sub-images of the image to identify the nostrils.

26. The apparatus according to claim 24 wherein the facial characteristic is a first facial characteristic and further comprising:

the controller using an anthropomorphic model and the location of the first facial characteristic to cause the histogram formation unit to select a sub-area of the image containing a second facial characteristic, the histogram formation unit selecting pixels of the image in the sub-area having characteristics corresponding to the second facial characteristic and forming a histogram of such pixels; and

the controller analyzing the histogram of the selected pixels

SAMSUNG EXHIBIT 1004
Page 159 of 404

corresponding to the second facial characteristic to confirm the identification of the first facial characteristic.

27. The apparatus according to claim 14 wherein the sensor is integrally constructed with the controller and the histogram formation unit.

28. The apparatus according to claim 14 further comprising an alarm, the controller operating the alarm upon detection of the person falling asleep.

29. The apparatus according to claim 14 further comprising an illumination source, the sensor being adapted to view the person when illuminated by the illumination source.

30. The apparatus according to claim 29 wherein the illumination source is a source of IR radiation.

31. A rear-view mirror assembly for a vehicle which comprises:

a rear-view mirror; and

the apparatus according to claim 14 mounted to the rear-view mirror.

32. The rear-view mirror assembly according to claim 31 further comprising a bracket attaching the apparatus to the rear-view mirror.

33. The rear-view mirror assembly according to claim 31 further comprising a housing having an open side and an interior, the rear-view mirror being mounted to the open side of the housing, the rear view mirror being see-through from the interior of the housing to an exterior of the housing, the apparatus being mounted interior to the housing with the sensor directed toward the rear-view mirror.

34. The rear-view mirror assembly according to claim 33 further comprising a joint attaching the apparatus to the rear-view mirror assembly, the joint adapted to maintain the apparatus in a position facing a driver of the vehicle during adjustment of the mirror assembly by the driver.

35. The rear-view mirror assembly according to claim 31 further comprising a source of illumination directed toward the person, the sensor being

adapted to view the person when illuminated by the source of illumination.

36. The rear-view mirror assembly according to claim 31 further comprising an alarm, the controller operating the alarm upon detection of the person falling asleep.

37. A rear-view mirror assembly which comprises:

a rear-view mirror; and

the apparatus according to claim 14, the sensor being mounted to the rear-view mirror, the controller and the histogram formation unit being located remote from the sensor.

38. A vehicle comprising the apparatus according to claim 14.

39. A process of detecting a feature of an eye, the process comprising the steps of:

acquiring an image of the face of the person, the image comprising pixels corresponding to the feature to be detected;

selecting pixels of the image having characteristics corresponding to the feature to be detected;

forming at least one histogram of the selected pixels;

analyzing the at least one histogram over time to identify characteristics indicative of the feature to be detected.

said feature being the iris, pupil or cornea.

P ENT COOPERATION TREA

From the INTERNATIONAL BUREAU

PCT

NOTIFICATION OF ELECTION

(PCT Rule 61.2)

To:

Assistant Commissioner for Patents
United States Patent and Trademark Office
Box PCT
Washington, D.C.20231
ÉTATS-UNIS D'AMÉRIQUE

in its capacity as elected Office

Date of mailing (day/month/year) 17 September 1999 (17.09.99)	
International application No. PCT/EP99/00300	**Applicant's or agent's file reference** 048J PCT 361
International filing date (day/month/year) 15 January 1999 (15.01.99)	**Priority date** (day/month/year) 15 January 1998 (15.01.98)
Applicant PIRIM, Patrick et al	

1. The designated Office is hereby notified of its election made:

[X] in the demand filed with the International Preliminary Examining Authority on:

09 August 1999 (09.08.99)

[ ] in a notice effecting later election filed with the International Bureau on:

2. The election [X] was

[ ] was not

made before the expiration of 19 months from the priority date or, where Rule 32 applies, within the time limit under Rule 32.2(b).

The International Bureau of WIPO **34, chemin des Colombettes** **1211 Geneva 20, Switzerland**	Authorized officer F. Baechler
Facsimile No.: (41-22) 740.14.35	Telephone No.: (41-22) 338.83.38

Form PCT/IB/331 (July 1992) 2850434

PATENT COOPERATION TREATY

From the INTERNATIONAL SEARCHING AUTHORITY

PCT

NOTIFICATION OF TRANSMITTAL OF THE INTERNATIONAL SEARCH REPORT OR THE DECLARATION

(PCT Rule 44.1)

To:
CABINET HARLE & PHELIP
Attn. Phelip, Bruno
7, rue de Madrid
F-75008 Paris
FRANCE

Applicant's or agent's file reference 048J PCT 361	Date of mailing *(day/month/year)* 04/06/1999 **FOR FURTHER ACTION** See paragraphs 1 and 4 below
International application No. PCT/EP 99/ 00300	International filing date *(day/month/year)* 15/01/1999
Applicant HOLDING B.E.V. SA et al.	

1. [X] The applicant is hereby notified that the International Search Report has been established and is transmitted herewith.

Filing of amendments and statement under Article 19:
The applicant is entitled, if he so wishes, to amend the claims of the International Application (see Rule 46):

When? The time limit for filing such amendments is normally 2 months from the date of transmittal of the International Search Report; however, for more details, see the notes on the accompanying sheet.

Where? Directly to the International Bureau of WIPO
34, chemin des Colombettes
1211 Geneva 20, Switzerland
Fascimile No.: (41-22) 740.14.35

For more detailed instructions, see the notes on the accompanying sheet.

2. [ ] The applicant is hereby notified that no International Search Report will be established and that the declaration under Article 17(2)(a) to that effect is transmitted herewith.

3. [ ] **With regard to the protest** against payment of (an) additional fee(s) under Rule 40.2, the applicant is notified that:

[ ] the protest together with the decision thereon has been transmitted to the International Bureau together with the applicant's request to forward the texts of both the protest and the decision thereon to the designated Offices.

[ ] no decision has been made yet on the protest; the applicant will be notified as soon as a decision is made.

4. **Further action(s):** The applicant is reminded of the following:

Shortly after **18 months** from the priority date, the international application will be published by the International Bureau. If the applicant wishes to avoid or postpone publication, a notice of withdrawal of the international application, or of the priority claim, must reach the International Bureau as provided in Rules 90*bis*.1 and 90*bis*.3, respectively, before the completion of the technical preparations for international publication.

Within **19 months** from the priority date, a demand for international preliminary examination must be filed if the applicant wishes to postpone the entry into the national phase until 30 months from the priority date (in some Offices even later).

Within **20 months** from the priority date, the applicant must perform the prescribed acts for entry into the national phase before all designated Offices which have not been elected in the demand or in a later election within 19 months from the priority date or could not be elected because they are not bound by Chapter II.

Name and mailing address of the International Searching Authority European Patent Office, P.B. 5818 Patentlaan 2 NL-2280 HV Rijswijk Tel. (+31-70) 340-2040, Tx. 31 651 epo nl, Fax: (+31-70) 340-3016	Authorized officer Eric Walsh

Form PCT/ISA/220 (July 1998)

PATENT COOPERATION TREATY

PCT

INTERNATIONAL SEARCH REPORT

(PCT Article 18 and Rules 43 and 44)

Applicant's or agent's file reference	FOR FURTHER ACTION	see Notification of Transmittal of International Search Report (Form PCT/ISA/220) as well as, where applicable, item 5 below.
048J PCT 361		
International application No.	International filing date *(day/month/year)*	(Earliest) Priority Date *(day/month/year)*
PCT/EP 99/00300	15/01/1999	15/01/1998
Applicant		
HOLDING B.E.V. SA et al.		

This International Search Report has been prepared by this International Searching Authority and is transmitted to the applicant according to Article 18. A copy is being transmitted to the International Bureau.

This International Search Report consists of a total of 2 sheets.

[X] It is also accompanied by a copy of each prior art document cited in this report.

1. **Basis of the report**

   a. With regard to the **language,** the international search was carried out on the basis of the international application in the language in which it was filed, unless otherwise indicated under this item.

   [ ] the international search was carried out on the basis of a translation of the international application furnished to this Authority (Rule 23.1(b)).

   b. With regard to any **nucleotide and/or amino acid sequence** disclosed in the international application, the international search was carried out on the basis of the sequence listing :

   [ ] contained in the international application in written form.

   [ ] filed together with the international application in computer readable form.

   [ ] furnished subsequently to this Authority in written form.

   [ ] furnished subsequently to this Authority in computer readble form.

   [ ] the statement that the subsequently furnished written sequence listing does not go beyond the disclosure in the international application as filed has been furnished.

   [ ] the statement that the information recorded in computer readable form is identical to the written sequence listing has been furnished

2. [ ] **Certain claims were found unsearchable** (See Box I).

3. [ ] **Unity of invention is lacking** (see Box II).

4. With regard to the **title,**

   [X] the text is approved as submitted by the applicant.

   [ ] the text has been established by this Authority to read as follows:

5. With regard to the **abstract,**

   [X] the text is approved as submitted by the applicant.

   [ ] the text has been established, according to Rule 38.2(b), by this Authority as it appears in Box III. The applicant may, within one month from the date of mailing of this international search report, submit comments to this Authority.

6. The figure of the **drawings** to be published with the abstract is Figure No. _____

   [ ] as suggested by the applicant.

   [ ] because the applicant failed to suggest a figure.

   [ ] because this figure better characterizes the invention.

   [X] None of the figures.

SAMSUNG EXHIBIT 1004
Page 164 of 404

INTERNATIONAL SEARCH REPORT

International Application No
EP 99/00300

A. CLASSIFICATION OF SUBJECT MATTER
IPC 6 G08B21/00

According to International Patent Classification (IPC) or to both national classification and IPC

B. FIELDS SEARCHED

Minimum documentation searched (classification system followed by classification symbols)
IPC 6 G08B G06T

Documentation searched other than minimum documentation to the extent that such documents are included in the fields searched

Electronic data base consulted during the international search (name of data base and, where practical, search terms used)

C. DOCUMENTS CONSIDERED TO BE RELEVANT

Category °	Citation of document, with indication, where appropriate, of the relevant passages	Relevant to claim No.
X,P	WO 98 05002 A (CARLUS MAGNUS LIMITED ;PIRIM PATRICK (FR)) 5 February 1998 cited in the application see claims 1-14	1-45
A	DE 197 15 519 A (MITSUBISHI MOTORS CORP) 6 November 1997 see the whole document	1-45
A	WO 97 01246 A (STEED VAN P ;CEJKA ROBERT K (US)) 9 January 1997 see abstract	1-45

☐ Further documents are listed in the continuation of box C.

☒ Patent family members are listed in annex.

° Special categories of cited documents :

"A" document defining the general state of the art which is not considered to be of particular relevance

"E" earlier document but published on or after the international filing date

"L" document which may throw doubts on priority claim(s) or which is cited to establish the publication date of another citation or other special reason (as specified)

"O" document referring to an oral disclosure, use, exhibition or other means

"P" document published prior to the international filing date but later than the priority date claimed

"T" later document published after the international filing date or priority date and not in conflict with the application but cited to understand the principle or theory underlying the invention

"X" document of particular relevance; the claimed invention cannot be considered novel or cannot be considered to involve an inventive step when the document is taken alone

"Y" document of particular relevance; the claimed invention cannot be considered to involve an inventive step when the document is combined with one or more other such documents, such combination being obvious to a person skilled in the art.

"&" document member of the same patent family

Date of the actual completion of the international search	Date of mailing of the international search report
28 May 1999	04/06/1999

Name and mailing address of the ISA	Authorized officer
European Patent Office, P.B. 5818 Patentlaan 2 NL - 2280 HV Rijswijk Tel. (+31-70) 340-2040, Tx. 31 651 epo nl, Fax: (+31-70) 340-3016	Sgura, S

Form PCT/ISA/210 (second sheet) (July 1992)

INTERNATIONAL SEARCH REPORT

Information on patent family members

International Application No
/EP 99/00300

Patent document cited in search report		Publication date	Patent family member(s)		Publication date
WO 9805002	A	05-02-1998	FR	2751772 A	30-01-1998
			AU	3775397 A	20-02-1998
			EP	0912964 A	06-05-1999
DE 19715519	A	06-11-1997	JP	9277849 A	28-10-1997
			FR	2747346 A	17-10-1997
			US	5786765 A	28-07-1998
WO 9701246	A	09-01-1997	AU	6480896 A	22-01-1997

Form PCT/ISA/210 (patent family annex) (July 1992)

PATENT COOPERATION TREATY

From the
INTERNATIONAL PRELIMINARY EXAMINING AUTHORITY

To:

MICHELET, A. et al.
CABINET HARLE & PHELIP
7, rue de Madrid
75008 PARIS
FRANCE

PCT

NOTIFICATION OF TRANSMITTAL OF THE INTERNATIONAL PRELIMINARY EXAMINATION REPORT
(PCT Rule 71.1)

Date of mailing *(day/month/year)*	17.02.2000
Applicant's or agent's file reference 048J PCT 361	**IMPORTANT NOTIFICATION**

International application No.	International filing date *(day/month/year)*	Priority date *(day/month/year)*
PCT/EP99/00300	15/01/1999	15/01/1998

Applicant
HOLDING B.E.V. SA et al.

1. The applicant is hereby notified that this International Preliminary Examining Authority transmits herewith the international preliminary examination report and its annexes, if any, established on the international application.

2. A copy of the report and its annexes, if any, is being transmitted to the International Bureau for communication to all the elected Offices.

3. Where required by any of the elected Offices, the International Bureau will prepare an English translation of the report (but not of any annexes) and will transmit such translation to those Offices.

4. **REMINDER**

The applicant must enter the national phase before each elected Office by performing certain acts (filing translations and paying national fees) within 30 months from the priority date (or later in some Offices) (Article 39(1)) (see also the reminder sent by the International Bureau with Form PCT/IB/301).

Where a translation of the international application must be furnished to an elected Office, that translation must contain a translation of any annexes to the international preliminary examination report. It is the applicant's responsibility to prepare and furnish such translation directly to each elected Office concerned.

For further details on the applicable time limits and requirements of the elected Offices, see Volume II of the PCT Applicant's Guide.

Name and mailing address of the IPEA/	Authorized officer
European Patent Office D-80298 Munich Tel. +49 89 2399 - 0 Tx: 523656 epmu d Fax: +49 89 2399 - 4465	Röhner, M Tel.+49 89 2399-8588

Form PCT/IPEA/416 (July 1992)

PCT/EP 99/00300

-/EP99/00300.

RÉPUBLIQUE FRANÇAISE

INPI
INSTITUT NATIONAL DE LA PROPRIETE INDUSTRIELLE

5

BREVET D'INVENTION

REC'D 1999
WIPO PCT
EPO - DG 1
18. 05. 1999

09/600390

CERTIFICAT D'UTILITÉ - CERTIFICAT D'ADDITION

[redacted]

(67)

COPIE OFFICIELLE

Le Directeur général de l'Institut national de la propriété industrielle certifie que le document ci-annexé est la copie certifiée conforme d'une demande de titre de propriété industrielle déposée à l'Institut.

Fait à Paris, le 12 MAI 1999

PRIORITY DOCUMENT
SUBMITTED OR TRANSMITTED IN COMPLIANCE WITH RULE 17.1(a) OR (b)

Pour le Directeur général de l'Institut national de la propriété industrielle
Le Chef du Département des brevets

Martine PLANCHE

INSTITUT NATIONAL DE LA PROPRIETE INDUSTRIELLE
SIEGE
26 bis, rue de Saint Petersbourg
75800 PARIS Cédex 08
Téléphone : 01 53 04 53 04
Télécopie : 01 42 93 59 30

DB 267/250298
ETABLISSEMENT PUBLIC NATIONAL CREE PAR LA LOI N° 51-444 DU 19 AVRIL 1951

On va décrire maintenant un mode de réalisation préféré d'un dispositif selon l'invention, mettant en œuvre le procédé selon l'invention, ainsi que certaines variantes de celui-ci, avec référence aux dessins annexés, sur lesquels :

Les figures 1 et 2 sont des vues, respectivement de coté et par-dessus, illustrant schématiquement la tête d'un conducteur de véhicule automobile et ses axes de vision vers l'avant et vers l'arrière.

La figure 3 illustre schématiquement la disposition classique du miroir d'un rétroviseur intérieur dans un véhicule automobile et les différents axes de vision du conducteur, cette figure correspondant à l'état de la technique.

Les figures 4 et 5 représentent respectivement l'ensemble et les articulations d'un rétroviseur avec le capteur optoélectronique et son électronique associée dans le cadre de l'invention.

La figure 6 illustre le champ du capteur optoélectronique prévu dans le rétroviseur des figures 4 et 5.

Les figures 7 et 8 représentent la manière de cadrer le visage du conducteur en place.

Les figures 9 et 10 représentent la manière de cadrer les yeux du conducteur en place.

Les figures 11 et 12 sont relatives à la mesure de la durée des clignements des yeux du conducteur et des intervalles temporels séparent deux clignements successifs.

La figure 13 représente l'ordinogramme des phases successives de fonctionnement.

En se référant tout d'abord aux figures 1 à 6, on va commencer la description détaillée du mode de réalisation préféré de l'invention par celle du dispositif optique et mécanique avec le capteur optoélectronique (micro-caméra vidéo ou capteur MOS avec lentille incorporée) et son ensemble électronique associé, constitué essentiellement par une ou plusieurs puces, qui transforme l'image captée par le capteur en un signal vidéo qui est traité afin de détecter une tendance à l'endormissement du conducteur en place, observé par ledit capteur.

En effet l'invention utilise essentiellement la variation de la durée des clignements des yeux d'une personne lors du passage de l'état éveillé à l'état somnolent ou assoupi de celle-ci : une personne éveillée cligne, à intervalles relativement réguliers, des paupières, et donc des cils, en 100 à 200 ms environ, tandis que la durée des clignements de cette personne à l'état somnolent passe à 500 à 800 ms environ, les intervalles entre clignements augmentant et étant variables.

sensiblement hémisphériques portées par l'étrier 16) avant de rejoindre par son autre extrémité la rotule 14a ou le manchon 14*b*.

Une telle articulation, qui maintient en permanence un angle approprié entre le miroir 9 et le support 11, permet à la fois l'orientation habituelle du rétroviseur intérieur par le conducteur et l'orientation du support 11 du capteur 10 pour que la face 10*a* de ce capteur reçoive l'image d'au moins le visage du conducteur en place lorsque le rétroviseur est convenablement orienté.

Le capteur optoélectronique 10 débite par un conducteur 18 dans une unité électronique d'analyse 19 (avantageusement constituée par un boîtier à puce ou puces logé à l'intérieur du rétroviseur 8) le signal vidéo qu'il élabore à partir de l'image qu'il reçoit sur sa face 10*a*.

On peut prévoir des diodes électroluminescentes 20 pour émettre, en direction du conducteur en place, lorsque le rétroviseur est correctement orienté, un rayonnement infrarouge apte à éclairer au moins le visage de conducteur en place, lorsque la lumière d'ambiance (y compris celle du tableau de bord) est insuffisante pour le fonctionnement correct du capteur 10, qui dans ce cas doit être sensible au rayonnement infrarouge, et de son unité électronique 19 ; l'excitation, éventuellement progressive, de ces diodes est, par exemple, contrôlée par l'unité électronique 19 grâce à une cellule photoélectrique (non représentée) ou en réponse à des signaux de pixels (dans le signal vidéo) d'intensité insuffisante (comme représenté schématiquement par le conducteur 21).

L'alarme activée, en cas d'endormissement du conducteur, par l'unité électronique 19 est illustrée schématiquement en 22 sur le figure 4, sur laquelle on n'a pas illustré les alimentations du capteur 10, de l'unité électronique 19 et des diodes 20, pour simplifier cette figure.

L'unité 19 pourrait, en variante, être disposée hors du boîtier du rétroviseur.

On va maintenant exposer le traitement, dans l'unité électronique d'analyse 19, du signal vidéo issu du capteur optoélectronique 10 (à micro-caméra électronique ou capteur MOS avec lentille incorporée suivie d'une unité électronique), ce signal vidéo comportant une succession de trames correspondantes (de même nature) à la cadence de 50 ou 60 telles trames par seconde (soit les trames paires ou bien impaires dans le cas d'un signal à deux trames entrelacées par image, soit les trames uniques dans le cas d'un signal à une seule trame par image) ; ce traitement a pour objet de réaliser la surveillance de la vigilance du conducteur en place en déterminant, en temps réel et en continu, la durée des clignements

SAMSUNG EXHIBIT 1004
Page 170 of 404

de ses yeux et en déclenchant, en cas de tendance du conducteur à l'endormissement (révélée par la variation de cette durée), un signal d'alarme apte à éveiller celui-ci.

Le procédé et le dispositif, selon la présente invention mettant en œuvre, pour repérer et localiser une zone en mouvement (à savoir successivement le conducteur, son visage et ses yeux, en particulier ses paupières) et déterminer la direction et éventuellement la vitesse de ce mouvement, le procédé et le dispositif selon les demandes de brevet susvisées, dont les descriptions sont incorporées dans la présente description détaillée par référence, il est utile de résumer le processus décrit dans ces demandes de brevet.

Dans ces demandes, le signal vidéo (produit par une caméra vidéo ou autre capteur), qui comprend une succession de trames de même nature (constituées par les trames correspondantes, soit paires, soit impaires, dans le cas d'un système vidéo à deux trames entrelacées par image, soit les trames successives dans le cas d'un système vidéo à trame unique par image), est traité pour successivement

- déduire, des variations de la valeur ou intensité de chaque pixel entre une trame et la trame correspondante antérieure,
  - d'une part, un signal binaire, noté *DP*, dont les deux valeurs possibles sont représentatives, l'une, d'une variation significative de la valeur du pixel et, l'autre, d'une non-variation significative de cette valeur, valeurs notées par exemple «1» et «0» respectivement, et
  - d'autre part, un signal numérique, noté *CO*, à nombre réduit de valeurs possibles, ce signal étant représentatif de la grandeur de cette variation de la valeur du pixel ;
- répartir suivant une matrice, par roulement, des valeurs de ces deux signaux *DP* et *CO* pour une même trame qui défile à travers la matrice ; et
- déduire, de cette répartition matricielle, le déplacement recherché et ses paramètres (localisation, direction et vitesse).

Cette dernière opération de détection du déplacement met en préférence en œuvre, selon ces demandes de brevet précitées,

- la formation d'histogrammes, suivant deux axes, par exemple O*x* et O*y* orthogonaux, d'au moins les signaux *DP* et *CO*, répartis matriciellement dans l'opération précédente, et
- le repérage, dans chacun des histogrammes relatifs à *DP* et *CO*, d'un domaine de variation significative de *CO* avec simultanément *DP* = «1».

SAMSUNG EXHIBIT 1004
Page 171 of 404

La présente invention, réalise successivement, par mise en œuvre du procédé et dispositif selon les demandes de brevet précitées, dont on vient de résumer le processus,

- dans une phase préliminaire, la détection de la présence d'un conducteur en place ;
- dans une première phase, le cadrage du visage du conducteur dans les trames de même nature, ou correspondantes, successives du signal vidéo ;
- dans une deuxième phase, le cadrage des yeux du conducteur à l'intérieur du cadrage du visage ;
- dans une troisième phase, la détermination des durées successives des clignements des yeux du conducteur, et éventuellement la détermination des intervalles de temps séparant deux clignements successifs ;
- dans une quatrième phase, la comparaison des durées des clignements à un certain seuil, avec génération d'un signal d'alarme apte à éveiller le conducteur dès que cette comparaison révèle le dépassement vers le haut de ce seuil par cette durée, et éventuellement la comparaison des variations temporelle des intervalles de temps entre deux clignements successifs à un autre seuil, avec génération d'un signal d'alarme renforcé dès que cette comparaison révèle le dépassement vers le haut de ce dernier seuil.

On va décrire maintenant plus en détail la réalisation de chacune de ces cinq phases par le procédé et le dispositif selon l'invention.

La phase préliminaire, qui détecte la présence d'un conducteur en place et amorce la première phase de cadrage du visage, est déclenchée par un contacteur actionné manuellement ou autrement, notamment par mise en œuvre des procédé et dispositif des demandes de brevet précitées ; elle commence effectivement avec le réglage du rétroviseur pour orienter la face avant 9*a* du miroir sans tain 9 de celui-ci (figure 4) vers le conducteur afin qu'il aperçoive dans ce miroir la rue ou route derrière lui, au cas il y a besoin d'un tel réglage.

La figure 6 illustre, entre les directions 23*a* et 23*b*, le champ 23 du capteur 10, la tête *T* du conducteur devant se trouver, du fait du réglage du rétroviseur intérieur 8, tel que décrit avec référence aux figures 4 et 5, à l'intérieur et dans la zone centrale de ce champ conique 23. Ce champ peut être relativement étroit, étant donné que les déplacements de la tête *T* du conducteur au cours de la conduite sont limités (sauf rares exceptions) ; la limitation du champ améliore la sensibilité du dispositif étant donné que l'image du visage du conducteur, qui est reçue par la face 10*a* du capteur correctement orienté en même

SAMSUNG EXHIBIT 1004
Page 172 of 404

temps que le miroir 9, occupe alors une place relativement importante dans les trames du signal vidéo ; elle est donc représentée par un nombre de pixels qui est une fraction notable du nombre total des pixels par trame.

Sur la figure 6 on retrouve les directions ou rayons lumineux 1, 2*a* et 2*b* de la figure 3.

La mise en place du conducteur est avantageusement détectée par les déplacements de sa tête, en particulier de son visage, pour venir en position de conduite, par mise en œuvre du procédé et du dispositif selon les deux demandes de brevet précitées qui permettent de détecter les déplacements, comme rappelé brièvement ci-dessus.

En fait l'arrivée du conducteur à sa place et le déplacement de sa tête *T* en résultant sont révélés par le nombre important de pixels du signal vidéo pour lesquels le signal binaire *DP* a la valeur «1» correspondant à une variation significative de la valeur du pixel entre deux trames correspondantes successives et le signal numérique *CO* a une valeur relativement élevée.

Le rapport du nombre de tels pixels (avec *DP* et *CO* ayant les valeurs définies ci-dessus) au nombre total de pixels d'une trame, lors de la mise en place du conducteur, dépend de la dimension du champ de vision du capteur de part et d'autre de la tête *T* en place pour la conduite. En cas de champ de vision étroit (angle réduit entre 23*a* et 23*b* figure 6), on peut considérer par exemple, que si plus de la moitié des pixels «en déplacement» d'une trame ont un *DP* et un *CO* avec les valeurs sus-avancées, il y a mise en place du conducteur. On peut alors considérer un seuil de 50 % entre le nombre de pixels «en déplacement» et le nombre total de pixels d'une trame et dans ce cas la phase préliminaire se termine par la production, lorsque ce seuil est dépassé vers le haut, d'un drapeau «1» de présence qui amorce la suite du traitement du signal vidéo, en commençant par la première phase. Bien entendu le seuil retenu pour le déclenchement du drapeau «1» peut être différent de 50 %, en tenant compte du champ de vision du capteur 10.

En variante, le drapeau «1» de présence amorçant la première phase peut être produit par une commande externe à l'unité électronique 19, mais déclenchant celle-ci, par exemple provoquée par l'actionnement de la clé de contact, le bouclage de la ceinture de sécurité du conducteur ou le fléchissement du siège du conducteur sous son poids.

Lorsque la présence du conducteur a été révélée et le drapeau «1» de présence généré, la première phase de traitement du signal vidéo peut commencer. Elle consiste, comme indiqué précédemment, à cadrer le visage du conducteur dans le signal vidéo en

SAMSUNG EXHIBIT 1004
Page 173 of 404

éliminant les portions superflues, en haut, en bas, à droite et à gauche de la tête dans l'image perçue par le détecteur 10.

A cet effet, par mise en œuvre du procédé et du dispositif selon l'invention, ce sont les déplacements horizontaux, c'est-à-dire de la droite vers la gauche et inversement, qui sont détectés, car la tête d'un conducteur a tendance à se déplacer horizontalement plutôt que verticalement, c'est-à-dire de haut en bas et inversement.

On extrait, donc, du flot des données représentées dans les trames correspondantes successives du signal vidéo, un signal de déplacement horizontal, en position, sens et éventuellement vitesse, grâce à la matrice roulante des valeurs de *DP* et *CO*, et on l'analyse par sélection suivant deux axes de coordonnées privilégiés, par exemple les axes classiques O*x* et O*y* des coordonnées cartésiennes, par mise en œuvre des moyens de formation d'histogrammes des demandes de brevet précitées.

La comptabilisation, en fin de trames, des pixels représentatifs d'un déplacement horizontal permet de détecter des pics de déplacement le long des bords du visage, pour lesquels les variations de luminosité, donc de valeur de pixel, sont les plus importantes, aussi bien en projection horizontale suivant O*x* qu'en projection verticale suivant O*y* par exemple.

Ceci est illustré sur la figure 7 sur laquelle on a représenté les axes *Ox* et *Oy*, ainsi que les histogrammes 24*x*, suivant *Ox*, et 24*y*, suivant *Oy*, c'est-à-dire en projection horizontale et verticale respectivement.

Les pics 25*a* et 25*b*, de l'histogramme 24*x*, et 25*c* et 25*d*, de l'histogramme 24*y*, délimitent, par leur coordonnés respectives 26*a*, 26*b*, 26*c*, 26*d*, un cadre limité par les droites *Ya*, *Yb*, *Xc*, *Xd* qui renferme le visage *V* du conducteur entouré par les ondulations respectives 27*a*, 27*b*, 27*c*, 27*d* qui illustrent les légers mouvements du conducteur dans les zones de plus grande variation des intensités des pixels, lors de ses mouvements.

Le repérage des coordonnées 26*a*, 26*b*, 26*c* et 26*d*, correspondant aux quatre pics 25*a*, 25*b*, 25*c* et 25*d* des deux histogrammes 24*x* et 24*y*, permet donc de mieux définir et cadrer l'emplacement du visage *V* du conducteur dans la zone Z et d'éliminer, pour la suite du traitement du signal vidéo, les portions supérieure, inférieure, de droite et de gauche par rapport au cadre *Xc*, *Xd*, *Ya*, *Yb*, comme illustré sur la figure 8 par des zones hachurées encadrant le visage *V*, ce qui permet d'accroître la précision, et éventuellement la cadence, de l'analyse portant sur la zone centrale *Z*, non hachurée, encadrée par les droites *Xc*, *Xd*, *Ya*, *Yb* et contenant le visage *V*.

SAMSUNG EXHIBIT 1004
Page 174 of 404

Cette opération de cadrage du visage entier est renouvelée à intervalles réguliers, par exemple toutes les dix trames du signal vidéo, et les valeurs moyennes (au cours du temps) des coordonnées 26*a*, 26*b*, 26*c*, 26*d*, sont déterminées, en redéfinissant le cadre, légèrement variable, mais relativement stable, *Xc*, *Xd*, *Ya*, *Yb* autour du visage *V*. On constate donc que la position dudit cadre (avec la zone limitée pour l'analyse ultérieure) est très robuste, c'est-à-dire stable au cours du temps.

Un nouveau drapeau «1» de visage cadré est produit après établissement du cadrage du visage *V* du conducteur.

La production de ce drapeau déclenche la deuxième phase, qui consiste à réduire encore plus le cadre du traitement, à savoir à celui des yeux du conducteur.

Cette deuxième phase comporte, de préférence, une opération préliminaire consistant à utiliser, dans l'unité électronique 19, le rapport anthropométrique habituel entre la zone des yeux et l'ensemble du visage chez un être humain, notamment dans le sens vertical, la zone des yeux occupant seulement une portion limitée du visage entier.

L'unité électronique 19 détermine alors, dans cette opération préliminaire, par ratio un cadre *Z'* plus limité, incluant les yeux *U* du conducteur, dans le cadre précédent *Z* du visage *V*, limité par *Ya*, *Yb*, *Xc*, *Xd*, ce cadre *Z'* étant, comme illustré sur la figure 9 défini par les droites *Y'a*, *Y'b*, *X'c* et *X'd* à l'intérieur du cadre *Ya*, *Yb*, *Xc*, *Xd* (zone *Z*).

On élimine ainsi les zones hachurées externes (simples hachures) sur la figure 9 pour ne conserver que le cadre *Z'*, ce qui facilite le cadrage définitif des yeux dans la deuxième phase et augmente sa précision et la vitesse de sa détermination.

Après la fin de cette opération préliminaire si elle existe, ce qui génère un drapeau «1» de cadrage grossier des yeux, ou directement après la première phase de traitement, c'est-à-dire respectivement en réponse à l'apparition du drapeau «1» de cadrage grossier des yeux ou du drapeau «1» de visage cadré respectivement, l'unité électronique 19 effectue la deuxième phase de cadrage effectif plus serré des yeux du conducteur en détectant, dans la matrice des *DP* et *CO*, les emplacements de pixels pour lesquels $DP = 1$ et *CO* présente une valeur élevée, notamment pour des déplacements dans le sens vertical du fait que les paupières clignent de haut en bas et inversement.

Lorsque le nombre de tels emplacements de pixels atteint un certain seuil dans le cadre *Y'a*, *Y'b*, *X'c*, *X'd* (zone *Z'*) dans le cas où l'opération préliminaire est prévue ou dans le cadre *Ya*, *Yb*, *Xc*, *Xd* (zone *Z*) en l'absence d'une telle opération préliminaire, ce seuil étant par exemple de 20 % par rapport au nombre total de pixels dans le cadre *Y'a*, *Y'b*, *X'c*,

SAMSUNG EXHIBIT 1004
Page 175 of 404

X'd dans le premier cas et de 10 % par rapport au nombre total de pixels dans le cadre *Ya*, *Yb*, *Xc*, *Xd* dans le second cas, un drapeau «1» de cadrage fin des yeux est généré ; ce drapeau indique en fait que les paupières du conducteur sont actives, car il est provoqué par les clignements des yeux du conducteur ; mouvements dans le sens vertical repérés de la même manière que les déplacements horizontaux du visage du conducteur dans la première phase.

Sur la figure 10 on a illustré le cadre éventuel *Y'a*, *Y'b*, *X'c*, *X'd*, définissent la zone *Z'* de cadrage grossier des yeux du conducteur, ainsi que les histogrammes 28*x* selon l'axe *Ox* et 28*y* suivant l'axe *Oy* des déplacements verticaux des paupières du conducteur, c'est-à-dire des pixels de la matrice révélant, par leur *DP* et leur *CO*, de tels déplacements. Ces histogrammes 28*x* et 28*y*, qui correspondent aux histogrammes 24*x* et 24*y* des déplacements horizontaux du visage du conducteur, illustrés sur la figure 7, déterminent, par leurs pics 29*a*, 29*b*, 29*c*, 29*d*, des droites horizontales *X"c* et *X"d* et des droites verticales *Y"a* et *Y"b* définissant, à l'intérieur de la zone *Z'*, une zone *Z"* qui encadre les yeux du conducteur dont les déplacements des bords sont indiqués en 30*a* et 30*b* pour un œil et 30*c* et 30*d* pour l'autre œil.

La position du cadre *Y"a*, *Y"b*, *X"c*, *X"d* est réactualisée par détermination des valeurs moyennes au cours du temps, par exemple toutes les dix trames, des coordonnées des pics 29*a*, 29*b*, 29*c*, 29*d* et, à partir de la production du drapeau «1» de cadrage fin des yeux, ce sont seulement les pixels compris dans le cadre limité de la zone *Z"* qui sont traités dans la troisième phase déclenchée par ce drapeau (la zone Z'' étant figurée en blanc sur la figure 9).

Dans cette troisième phase sont déterminées les durées des clignements des yeux, et éventuellement les intervalles de temps séparant deux clignements successifs, en perfectionnant l'analyse des déplacements verticaux des paupières dans la zone *Z"* par traitement dans l'unité électronique 19 des portions des trames successives du signal vidéo correspondant à cette zone *Z"*, ce qui permet une grande précision.

Sur la figure 11 on a illustré dans un système de coordonnées suivant trois directions orthogonales entre elles, à savoir *OQ* sur laquelle on a porté *CO*, c'est-à-dire les intensités de la variation de la valeur de pixel, correspondant au mouvement vertical des paupières, *Ot* sur laquelle on a porté les intervalles de temps entre deux clignements successifs et *Oz* sur laquelle on a porté les durées des clignements, donc trois paramètres

SAMSUNG EXHIBIT 1004
Page 176 of 404

ILLE AVANT RECTIFICATION

différents permettant de déterminer le passage de l'état éveillé à l'état endormi du conducteur. Deux clignements successifs C_1 et C_2 sont représentés sur la figure 11.

La figure 12 illustre par la courbe C, sur la portion (a), la variation, dans le temps suivant Ot du nombre de pixels par trame en mouvement vertical significatif (pour lesquels $DP = 1$ et CO a une valeur relativement importante), les pics successifs P_1, P_2, P_3 du nombre de pixels en mouvement correspondant à des clignements.

Les trames correspondantes successives relatives à la courbe C sont représentées, schématiquement et en partie, sur la portion (b) de la figure 12, par des traits verticaux, tels que 31, dont les pics P_1, P_2, P_3 sont encadrés par des rectangles R_1, R_2, R_3 respectivement, les deux portions (a) et (b) de la figure 12 étant disposées, l'une sous l'autre, en synchronisme temporel. Sur cette figure 12 on a représenté enfin les durées des clignements (5,6,5) et les intervalles de temps (14, 17) entre clignements successifs, en nombre de trames, valeurs qui correspondent à l'état éveillé du conducteur.

L'unité électronique 19, dans cette troisième phase, calcule les durées successives des clignements des yeux et les intervalles de temps successifs entre deux clignements consécutifs et fait une analyse statistique bi-dimensionnelle entre les durées successives des clignements et les intervalles entre clignements. Elle établit si les durées des clignements dépassent un certain seuil, par exemple 350 ms, et dans ce cas déclenchent un drapeau «1» de seuil de clignement dépassé et éventuellement si les intervalles de temps entre deux clignements successifs sont relativement constants ou au contraire significativement variables dans le temps, et dans le second cas déclenchent un drapeau «1» d'intervalles entre clignements variables.

Le premier drapeau sert à déclencher une alarme, sonore par exemple, apte à réveiller le conducteur, tandis que le second drapeau renforce l'alarme, par exemple en augmentant le niveau sonore.

L'ordinogramme annexé (page suivante) résume les différentes phases successives.

Le dialogue avec l'extérieur est réalisé, de préférence en mode série (CAN – VAN).

Le rétroviseur des figures 4 et 5 convient aussi bien pour un conducteur occupant le siège gauche que le siège droit, pour les pays à conduite à droite, et peut éventuellement être un rétroviseur extérieur, notamment du côté du conducteur.

Comme il va de soi, l'invention n'est pas limitée au mode de réalisation préféré décrit et illustré, ni à ses variantes mentionnées ci-dessus ; l'invention englobe au contraire

SAMSUNG EXHIBIT 1004
Page 177 of 404

les modifications, variantes et perfectionnement entrant dans le cadre des définitions de l'invention données dans le préambule et les revendications jointes.

ORGANIGRAMME DE L'INVENTION

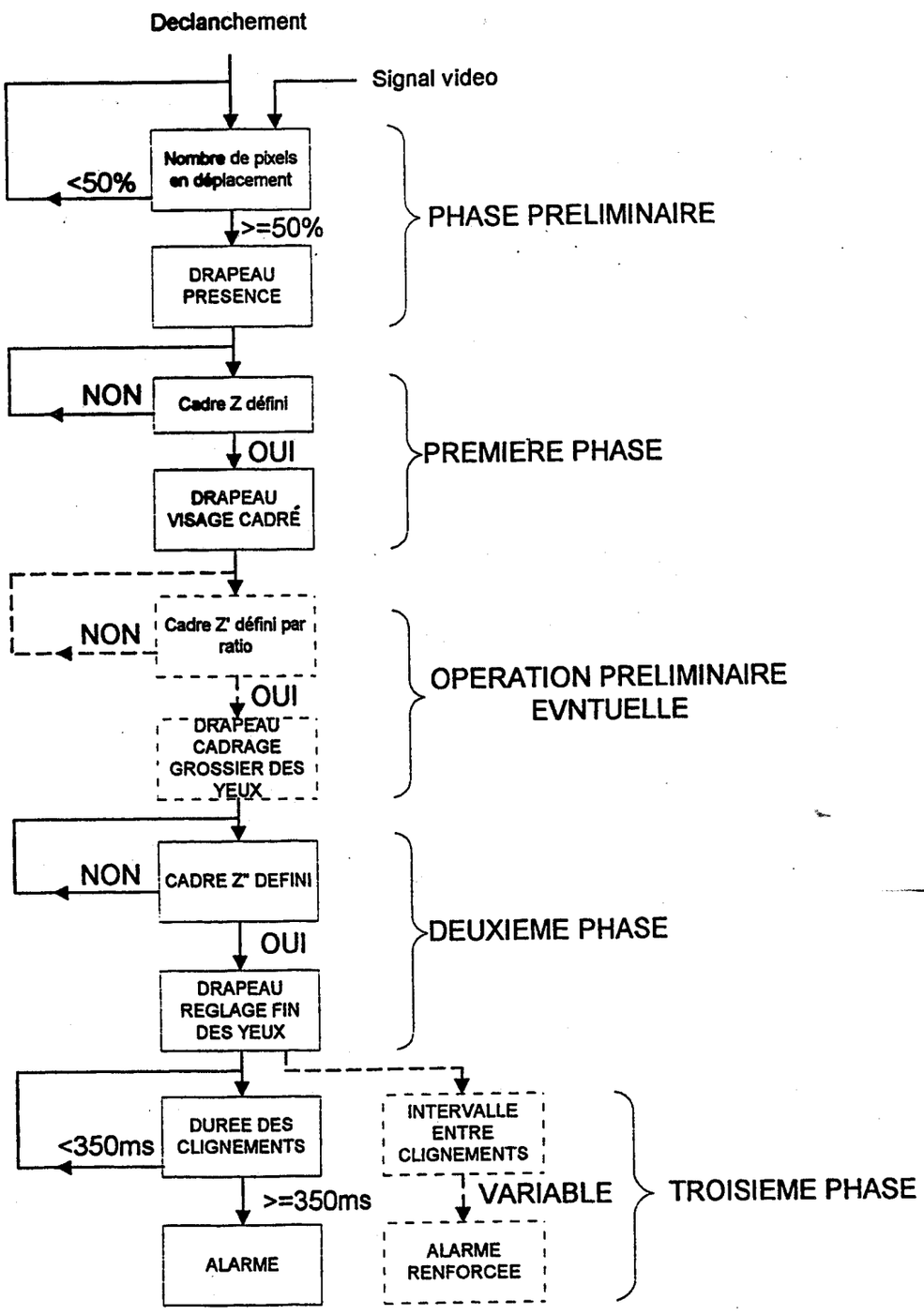

REVENDICATIONS

1. Procédé pour surveiller en continu l'état de vigilance du conducteur d'un véhicule automobile, afin de détecter et prévenir une tendance éventuelle à l'endormissement de celui-ci,

qui consiste

- à produire un signal vidéo représentatif, en temps réel, des images successives d'au moins le visage du conducteur ;
- à traiter ce signal, successivement et en continu, pour
  - détecter, dans ce signal, la portion correspondant effectivement à l'image de la tête du conducteur,
  - déterminer la valeur d'un paramètre relatif au clignement des paupières, qui se modifie notablement lors du passage de l'état éveillé à l'état somnolent du conducteur de part et d'autre d'un seuil, et
  - repérer, en temps réel, le franchissement, par la valeur de ce paramètre, de ce seuil représentatif du passage de l'état éveillé à l'état somnolent du conducteur ; et
- à déclencher, en réponse au franchissement de ce seuil, une alarme apte à réveiller le conducteur ;

et qui est caractérisé en ce que

- d'une part, le signal vidéo est produit en utilisant un capteur optoélectronique solidaire d'un rétroviseur du véhicule automobile et ayant son axe optique de réception des rayons lumineux dirigé vers la tête du conducteur lorsque le rétroviseur est correctement orienté ; et
- d'autre part, le traitement dudit signal vidéo consiste, après avoir détecté la présence du conducteur à sa place, à, successivement et en continu ,
  - détecter, à partir dudit signal vidéo, les déplacements horizontaux du conducteur, afin de cadrer le visage de celui-ci dans les trames correspondantes successives du signal vidéo,
  - détecter, à partir dudit signal vidéo, les déplacements verticaux dans le visage, ainsi cadré, du conducteur, afin de cadrer les yeux de celui-ci,

- déterminer, à partir dudit signal vidéo, les durées successives des clignements des yeux, ainsi cadrés, de celui-ci, ces durées constituant le dit paramètre,
- comparer ces durées successives des clignements, ainsi déterminées, à un seuil représentatif du passage de l'état éveillé à l'état somnolent du conducteur, et
- déclencher, lorsque les durées de clignement dépassent vers le haut le dit seuil, une alarme apte réveiller le conducteur.

2. Procédé selon la revendication 1, caractérisé en ce que ledit capteur est placé dans le boîtier du rétroviseur derrière la glace de celui-ci qui est constituée par un miroir sans tain.

3. Procédé selon la revendication 1 ou 2, caractérisé en ce qu'on détecte la présence du conducteur à sa place en déterminant le nombre de pixels correspondants dans les trames successives de même nature du signal vidéo pour lesquels un déplacement significatif est détecté et en comparant ce nombre au nombre total de pixels par trame du signal vidéo, afin de déterminer si le rapport entre le nombre de pixels représentant un déplacement et le nombre total de pixels par trame dépasse un seuil représentatif du passage de l'absence de conducteur à sa place à la présence d'un conducteur à sa place.

4. Procédé selon la revendication 1, 2, ou 3 caractérise en ce qu'entre les phases de détection des déplacements horizontaux, afin de cadrer le visage du conducteur, et de détection des déplacements verticaux, afin de cadrer les yeux de celui-ci, on prévoit une phase de cadrage large des yeux en se limitant à une portion du visage cadré englobant les yeux et leur environnement immédiat, par application du rapport anthropométrique entre ladite portion et le visage entier d'une personne.

5. Procédé selon l'une quelconque des revendications précédentes, caractérisé en ce, simultanément à la phase de détermination des durées des clignements des yeux, on prévoit une phase de détermination des intervalles de temps séparant deux clignements successifs de ceux-ci et on déclenche une alarme renforcée dès que ces intervalles de temps présentent une irrégularité qui dépasse un seuil déterminé.

6. Procédé selon l'une quelconque des revendications précédentes, caractérisé en ce qu'on réactualise en continu les données concernant au moins un des paramètres suivants : déplacements horizontaux, déplacements verticaux, durées des clignements des yeux, intervalles entre clignements successifs, afin de perfectionner les approximations des

valeurs normales de ces paramètres pour le conducteur effectivement présent et à l'état éveillé.

7. Procédé selon l'une quelconque des revendications précédentes, caractérisé en ce que les différentes phases successives du procédé sont réalisées au moyen de programmes informatiques successifs portant sur le traitement des valeurs successives des pixels correspondants des trames de même nature du signal vidéo obtenu à partir dudit capteur.

8. Dispositif pour surveiller en continu l'état de vigilance du conducteur d'un véhicule automobile, afin de détecter et prévenir une tendance éventuelle à l'endormissement de celui-ci, qui met en œuvre le procédé selon l'une quelconque des revendications 1 à 7 et qui est caractérisé en ce qu'il comprend, en combinaison :

- un capteur optoélectronique (10), qui, en combinaison avec une électronique associée (19), élabore, en réponse à la réception de rayons lumineux, un signal vidéo à trames de même nature, ou correspondantes, successives, ledit capteur étant solidaire d'un rétroviseur (8) du véhicule et ayant son axe optique (10b) de réception des rayons lumineux dirigé vers la tête (T) du conducteur lorsque le rétroviseur est correctement orienté ;
- des moyens pour détecter la présence du conducteur à sa place dans le véhicule, et pour élaborer un signal de présence ;
- des moyens, activés par ce signal de présence, pour détecter, à partir dudit signal vidéo, les déplacements horizontaux de dit conducteur, afin de cadrer le visage (V) de celui-ci dans les trames successives de même nature dudit signal vidéo, et pour élaborer un signal de fin de cadrage de visage ;
- des moyens, activés par ledit signal de fin de cadrage du visage, pour détecter, à partir de la portion des trames successives de même nature dudit signal vidéo correspondant au cadrage du visage, les déplacements verticaux dans le visage, ainsi cadré, du conducteur, afin de cadrer les yeux (U) de celui-ci dans ladite portion des trames de ce signal, et pour élaborer un signal de fin de cadrage des yeux du conducteur ;
- des moyens, activés par ledit signal de fin de cadrage des yeux, pour déterminer, à partir de la portion des trames successives de même nature dudit signal vidéo correspondant au cadrage des yeux, les durées successives des clignements des yeux du conducteur ;

ILLE AVANT RECTIFICATION

- des moyens pour comparer ces durées successives des clignements, ainsi déterminées, à un seuil représentatif du passage de l'état éveillé à l'état somnolent du conducteur ; et
- des moyens pour déclencher, lorsque les durées des clignements dépassent ledit seuil, une alarme (22) apte à réveiller le conducteur.

9. Dispositif selon la revendication 8, caractérisé en ce que ledit capteur (10) est placé dans le boîtier du rétroviseur (8) derrière le miroir de celui-ci, qui est un miroir (9) sans tain.

10. Dispositif selon la revendication 8 ou 9,caractérisé en ce que lesdits moyens pour détecter la présence du conducteur à sa place et pour élaborer un signal de présence sont constitués par des moyens pour déterminer le nombre de pixels dans les trames successives de même nature dudit signal vidéo pour lesquels un déplacement significatif est détecté, des moyens pour comparer ledit nombre au nombre total de pixels par trame du signal vidéo, afin de déterminer si le rapport entre le nombre de pixels correspondant à un déplacement et le nombre total de pixels par trame dépasse un seuil représentatif du passage de l'état d'absence de conducteur à sa place à l'état de présence d'un conducteur à sa place.

11. Dispositif selon la revendication 8, 9 ou 10, caractérisé en ce qu'il comprend en outre des moyens, activés par ledit signal de fin de cadrage du visage, pour sélectionner, dans ladite portion des trames successives dudit signal vidéo correspondant au cadrage du visage, une portion réduite correspondant à un cadrage large, ou grossier, des yeux du conducteur englobant les yeux et leur environnement immédiat par application du rapport anthropométrique entre ledit cadrage large et le visage entier d'une personne et des moyens pour élaborer un signal de fin de cadrage large des yeux, ce signal activant lesdits moyens pour détecter les déplacements verticaux dans le visage du conducteur.

12. Dispositif selon l'une quelconque des revendications précédantes, caractérisé en ce qu'il comporte des moyens, fonctionnant en parallèle avec lesdits moyens pour déterminer les durées successives des clignements des yeux et donc activés par ledit signal de fin de cadrage des yeux, pour déterminer les intervalles de temps séparant deux clignements successifs et pour déclencher une alarme renforcée dès que ces intervalles de temps présentent une irrégularité qui dépasse un seuil déterminé.

13. Dispositif selon l'une quelconque des revendications précédantes, caractérisé en ce qu'il comporte des moyens pour réactualiser en continu les données concernant au

SAMSUNG EXHIBIT 1004
Page 183 of 404

moins un des paramètres suivants: déplacements horizontaux, déplacements verticaux, durées des clignements des yeux, intervalles entre clignements successifs, afin de perfectionner les approximations des valeurs normales du paramètre impliqué pour le conducteur effectivement présent et à l'état éveillé.

14. Dispositif selon l'une quelconque des revendications précédentes, caractérisé en ce que l'ensemble capteur opto-électronique (10) - unité électronique (19) produit un signal vidéo comportant une succession de trames correspondantes de même nature à succession de lignes constituées par une succession de pixels et traite ledit signal vidéo pour successivement:

- déduire, des variations de la valeur ou intensité de chaque pixel entre une trame et la trame correspondante antérieure,
  - d'une part, un signal binaire, noté *DP*, dont les deux valeurs possibles sont représentatives, l'une, d'une variation significative de la valeur du pixel et, l'autre, d'une non-variation significative de cette valeur, et
  - d'autre part, un signal numérique, noté *CO*, à nombre réduit de valeurs possibles, ce signal étant représentatif de la grandeur de cette variation de la valeur du pixel;
- répartir suivant une matrice, par roulement, des valeurs de ces deux signaux *DP* et *CO* pour une même trame qui défile à travers la matrice; et
- déduire, de cette répartition matricielle, le déplacement recherché et ses paramètres de localisation et de direction.

15. Rétroviseur de véhicule automobile, caractérisé en ce que son miroir est constitué par une glace sans tain (9) et en ce qu'il comporte, derrière cette glace, un capteur avec optoélectronique (10) qui coopère avec une unité électronique (19) également disposée à l'intérieur du rétroviseur et en ce que l'ensemble capteur opto-électronique (10) - unité électronique (19) produit un signal vidéo comportant une succession de trames correspondantes de même nature à succession lignes constituées par une succession de pixels et traite ledit signal vidéo pour successivement:

- déduire, des variations de la valeur ou intensité de chaque pixel entre une trame et la trame correspondante antérieure,
  - d'une part, un signal binaire, noté *DP*, dont les deux valeurs possibles sont représentatives, l'une, d'une variation significative de la valeur du pixel et,

SAMSUNG EXHIBIT 1004
Page 184 of 404

- d'autre part, un signal numérique, noté *CO*, à nombre réduit de valeurs possibles, ce signal étant représentatif de la grandeur de cette variation de la valeur du pixel;

- répartir suivant une matrice, par roulement, des valeurs de ces deux signaux *DP* et *CO* pour une même trame qui défile à travers la matrice;
- déduire, de cette répartition matricielle, le déplacement recherché et ses paramètres de localisation et de direction; et
- déclencher un dispositif d'alarme (22) dès que ladite unité détermine que les mouvements verticaux des paupières d'une personne regardant la face avant (9*a*) de ladite glace correspondent à une durée des clignements des yeux qui dépasse un seuil prédéterminé inclus dans l'intervalle temporel compris entre la durée des cliquements d'une personne éveillée et celle d'une personne qui somnole.

16. Rétroviseur de véhicule automobile selon la revendication 15, caractérisé en ce qu'il porte en outre au moins une diode (20) électroluminescente au moins dans l'infra-rouge qui est activée au moins lorsque la luminosité ambiante devient insuffisante pour éclairer le visage du conducteur et en ce que ledit capteur optoélectronique (10) est sensible, entre autres, aux radiations infra-rouges émises par ladite diode.

Le Mandataire
Cabinet HARLÉ & PHÉLIP

FEUILLE RECTIFIÉE

REVENDICATIONS

1. Procédé pour surveiller en continu l'état de vigilance du conducteur d'un véhicule automobile, afin de détecter et prévenir une tendance éventuelle à l'endormissement de celui-ci,

qui consiste

- à produire un signal vidéo représentatif, en temps réel, des images successives d'au moins le visage du conducteur ;
- à traiter ce signal, successivement et en continu, pour
  - détecter, dans ce signal, la portion correspondant effectivement à l'image de la tête du conducteur,
  - déterminer la valeur d'un paramètre relatif au clignement des paupières, qui se modifie notablement lors du passage de l'état éveillé à l'état somnolent du conducteur de part et d'autre d'un seuil, et
  - repérer, en temps réel, le franchissement, par la valeur de ce paramètre, de ce seuil représentatif du passage de l'état éveillé à l'état somnolent du conducteur ; et
- à déclencher, en réponse au franchissement de ce seuil, une alarme apte à réveiller le conducteur ;

et qui est caractérisé en ce que

- d'une part, le signal vidéo est produit en utilisant un capteur optoélectronique solidaire d'un rétroviseur du véhicule automobile et ayant son axe optique de réception des rayons lumineux dirigé vers la tête du conducteur lorsque le rétroviseur est correctement orienté ; et
- d'autre part, le traitement dudit signal vidéo consiste, après avoir détecté la présence du conducteur à sa place, à, successivement et en continu ,
  - détecter, à partir dudit signal vidéo, les déplacements horizontaux du conducteur, afin de cadrer le visage de celui-ci dans les trames correspondantes successives du signal vidéo,
  - détecter, à partir dudit signal vidéo, les déplacements verticaux dans le visage, ainsi cadré, du conducteur, afin de cadrer les yeux de celui-ci,

PAGE BLANCHE

- déterminer, à partir dudit signal vidéo, les durées successives des clignements des yeux, ainsi cadrés, de celui-ci, ces durées constituant le dit paramètre,
- comparer ces durées successives des clignements, ainsi déterminées, à un seuil représentatif du passage de l'état éveillé à l'état somnolent du conducteur, et
- déclencher, lorsque les durées de clignement dépassent vers le haut le dit seuil, une alarme apte réveiller le conducteur.

2. Procédé selon la revendication 1, caractérisé en ce que ledit capteur est placé dans le boîtier du rétroviseur derrière la glace de celui-ci qui est constituée par un miroir sans tain.

3. Procédé selon la revendication 1 ou 2, caractérisé en ce qu'on détecte la présence du conducteur à sa place en déterminant le nombre de pixels correspondants dans les trames successives de même nature du signal vidéo pour lesquels un déplacement significatif est détecté et en comparant ce nombre au nombre total de pixels par trame du signal vidéo, afin de déterminer si le rapport entre le nombre de pixels représentant un déplacement et le nombre total de pixels par trame dépasse un seuil représentatif du passage de l'absence de conducteur à sa place à la présence d'un conducteur à sa place.

4. Procédé selon la revendication 1, 2, ou 3 caractérise en ce qu'entre les phases de détection des déplacements horizontaux, afin de cadrer le visage du conducteur, et de détection des déplacements verticaux, afin de cadrer les yeux de celui-ci, on prévoit une phase de cadrage large des yeux en se limitant à une portion du visage cadré englobant les yeux et leur environnement immédiat, par application du rapport anthropométrique entre ladite portion et le visage entier d'une personne.

5. Procédé selon l'une quelconque des revendications précédentes, caractérisé en ce, simultanément à la phase de détermination des durées des clignements des yeux, on prévoit une phase de détermination des intervalles de temps séparant deux clignements successifs de ceux-ci et on déclenche une alarme renforcée dès que ces intervalles de temps présentent une irrégularité qui dépasse un seuil déterminé.

6. Procédé selon l'une quelconque des revendications précédentes, caractérisé en ce qu'on réactualise en continu les données concernant au moins un des paramètres suivants : déplacements horizontaux, déplacements verticaux, durées des clignements des yeux, intervalles entre clignements successifs, afin de perfectionner les approximations des

valeurs normales de ces paramètres pour le conducteur effectivement présent et à l'état éveillé.

7. Procédé selon l'une quelconque des revendications précédentes, caractérisé en ce que les différentes phases successives du procédé sont réalisées au moyen de programmes informatiques successifs portant sur le traitement des valeurs successives des pixels correspondants des trames de même nature du signal vidéo obtenu à partir dudit capteur.

8. Dispositif pour surveiller en continu l'état de vigilance du conducteur d'un véhicule automobile, afin de détecter et prévenir une tendance éventuelle à l'endormissement de celui-ci, qui met en œuvre le procédé selon l'une quelconque des revendications 1 à 7 et qui est caractérisé en ce qu'il comprend, en combinaison :

- un capteur optoélectronique (10), qui, en combinaison avec une électronique associée (19), élabore, en réponse à la réception de rayons lumineux, un signal vidéo à trames de même nature, ou correspondantes, successives, ledit capteur étant solidaire d'un rétroviseur (8) du véhicule et ayant son axe optique (10b) de réception des rayons lumineux dirigé vers la tête (T) du conducteur lorsque le rétroviseur est correctement orienté ;
- des moyens pour détecter la présence du conducteur à sa place dans le véhicule, et pour élaborer un signal de présence ;
- des moyens, activés par ce signal de présence, pour détecter, à partir dudit signal vidéo, les déplacements horizontaux de dit conducteur, afin de cadrer le visage (V) de celui-ci dans les trames successives de même nature dudit signal vidéo, et pour élaborer un signal de fin de cadrage de visage ;
- des moyens, activés par ledit signal de fin de cadrage du visage, pour détecter, à partir de la portion des trames successives de même nature dudit signal vidéo correspondant au cadrage du visage, les déplacements verticaux dans le visage, ainsi cadré, du conducteur, afin de cadrer les yeux (U) de celui-ci dans ladite portion des trames de ce signal, et pour élaborer un signal de fin de cadrage des yeux du conducteur ;
- des moyens, activés par ledit signal de fin de cadrage des yeux, pour déterminer, à partir de la portion des trames successives de même nature dudit signal vidéo correspondant au cadrage des yeux, les durées successives des clignements des yeux du conducteur ;

SAMSUNG EXHIBIT 1004
Page 188 of 404

- des moyens pour comparer ces durées successives des clignements, ainsi déterminées, à un seuil représentatif du passage de l'état éveillé à l'état somnolent du conducteur ; et
- des moyens pour déclencher, lorsque les durées des clignements dépassent ledit seuil, une alarme (22) apte à réveiller le conducteur.

9. Dispositif selon la revendication 8, caractérisé en ce que ledit capteur (10) est placé dans le boîtier du rétroviseur (8) derrière le miroir de celui-ci, qui est un miroir (9) sans tain.

10. Dispositif selon la revendication 8 ou 9,caractérisé en ce que lesdits moyens pour détecter la présence du conducteur à sa place et pour élaborer un signal de présence sont constitués par des moyens pour déterminer le nombre de pixels dans les trames successives de même nature dudit signal vidéo pour lesquels un déplacement significatif est détecté, des moyens pour comparer ledit nombre au nombre total de pixels par trame du signal vidéo, afin de déterminer si le rapport entre le nombre de pixels correspondant à un déplacement et le nombre total de pixels par trame dépasse un seuil représentatif du passage de l'état d'absence de conducteur à sa place à l'état de présence d'un conducteur à sa place.

11. Dispositif selon la revendication 8, 9 ou 10, caractérisé en ce qu'il comprend en outre des moyens, activés par ledit signal de fin de cadrage du visage, pour sélectionner, dans ladite portion des trames successives dudit signal vidéo correspondant au cadrage du visage, une portion réduite correspondant à un cadrage large, ou grossier, des yeux du conducteur englobant les yeux et leur environnement immédiat par application du rapport anthropométrique entre ledit cadrage large et le visage entier d'une personne et des moyens pour élaborer un signal de fin de cadrage large des yeux, ce signal activant lesdits moyens pour détecter les déplacements verticaux dans le visage du conducteur.

12. Dispositif selon l'une quelconque des revendications précédantes, caractérisé en ce qu'il comporte des moyens, fonctionnant en parallèle avec lesdits moyens pour déterminer les durées successives des clignements des yeux et donc activés par ledit signal de fin de cadrage des yeux, pour déterminer les intervalles de temps séparant deux clignements successifs et pour déclencher une alarme renforcée dès que ces intervalles de temps présentent une irrégularité qui dépasse un seuil déterminé.

13. Dispositif selon l'une quelconque des revendications précédantes, caractérisé en ce qu'il comporte des moyens pour réactualiser en continu les données concernant au

moins un des paramètres suivants: déplacements horizontaux, déplacements verticaux, durées des clignements des yeux, intervalles entre clignements successifs, afin de perfectionner les approximations des valeurs normales du paramètre impliqué pour le conducteur effectivement présent et à l'état éveillé.

14. Dispositif selon l'une quelconque des revendications précédentes, caractérisé en ce que l'ensemble capteur opto-électronique (10) - unité électronique (19) produit un signal vidéo comportant une succession de trames correspondantes de même nature à succession de lignes constituées par une succession de pixels et traite ledit signal vidéo pour successivement:

- déduire, des variations de la valeur ou intensité de chaque pixel entre une trame et la trame correspondante antérieure,
  - d'une part, un signal binaire, noté *DP*, dont les deux valeurs possibles sont représentatives, l'une, d'une variation significative de la valeur du pixel et, l'autre, d'une non-variation significative de cette valeur, et
  - d'autre part, un signal numérique, noté *CO*, à nombre réduit de valeurs possibles, ce signal étant représentatif de la grandeur de cette variation de la valeur du pixel;
- répartir suivant une matrice, par roulement, des valeurs de ces deux signaux *DP* et *CO* pour une même trame qui défile à travers la matrice; et
- déduire, de cette répartition matricielle, le déplacement recherché et ses paramètres de localisation et de direction.

15. Rétroviseur de véhicule automobile, caractérisé en ce que son miroir est constitué par une glace sans tain (9) et en ce qu'il comporte, derrière cette glace, un capteur avec optoélectronique (10) qui coopère avec une unité électronique (19) également disposée à l'intérieur du rétroviseur et en ce que l'ensemble capteur opto-électronique (10) - unité électronique (19) produit un signal vidéo comportant une succession de trames correspondantes de même nature à succession lignes constituées par une succession de pixels et traite ledit signal vidéo pour successivement:

- déduire, des variations de la valeur ou intensité de chaque pixel entre une trame et la trame correspondante antérieure,
  - d'une part, un signal binaire, noté *DP*, dont les deux valeurs possibles sont représentatives, l'une, d'une variation significative de la valeur du pixel et,

FEUILLE RECTIFIÉE

- d'autre part, un signal numérique, noté *CO*, à nombre réduit de valeurs possibles, ce signal étant représentatif de la grandeur de cette variation de la valeur du pixel;

- répartir suivant une matrice, par roulement, des valeurs de ces deux signaux *DP* et *CO* pour une même trame qui défile à travers la matrice;
- déduire, de cette répartition matricielle, le déplacement recherché et ses paramètres de localisation et de direction; et
- déclencher un dispositif d'alarme (22) dès que ladite unité détermine que les mouvements verticaux des paupières d'une personne regardant la face avant (9*a*) de ladite glace correspondent à une durée des clignements des yeux qui dépasse un seuil prédéterminé inclus dans l'intervalle temporel compris entre la durée des cliquements d'une personne éveillée et celle d'une personne qui somnole.

16. Rétroviseur de véhicule automobile selon la revendication 15, caractérisé en ce qu'il porte en outre au moins une diode (20) électroluminescente au moins dans l'infra-rouge qui est activée au moins lorsque la luminosité ambiante devient insuffisante pour éclairer le visage du conducteur et en ce que ledit capteur optoélectronique (10) est sensible, entre autres, aux radiations infra-rouges émises par ladite diode.

SAMSUNG EXHIBIT 1004
Page 191 of 404

différents permettant de déterminer le passage de l'état éveillé à l'état endormi du conducteur. Deux clignements successifs C_1 et C_2 sont représentés sur la figure 11.

La figure 12 illustre par la courbe C, sur la portion (a), la variation, dans le temps suivant Ot du nombre de pixels par trame en mouvement vertical significatif (pour lesquels $DP = 1$ et CO a une valeur relativement importante), les pics successifs P_1, P_2, P_3 du nombre de pixels en mouvement correspondant à des clignements.

Les trames correspondantes successives relatives à la courbe C sont représentées, schématiquement et en partie, sur la portion (b) de la figure 12, par des traits verticaux, tels que 31, dont les pics P_1, P_2, P_3 sont encadrés par des rectangles R_1, R_2, R_3 respectivement, les deux portions (a) et (b) de la figure 12 étant disposées, l'une sous l'autre, en synchronisme temporel. Sur cette figure 12 on a représenté enfin les durées des clignements (5,6,5) et les intervalles de temps (14, 17) entre clignements successifs, en nombre de trames, valeurs qui correspondent à l'état éveillé du conducteur.

L'unité électronique 19, dans cette troisième phase, calcule les durées successives des clignements des yeux et les intervalles de temps successifs entre deux clignements consécutifs et fait une analyse statistique bi-dimensionnelle entre les durées successives des clignements et les intervalles entre clignements. Elle établit si les durées des clignements dépassent un certain seuil, par exemple 350 ms, et dans ce cas déclenchent un drapeau «1» de seuil de clignement dépassé et éventuellement si les intervalles de temps entre deux clignements successifs sont relativement constants ou au contraire significativement variables dans le temps, et dans le second cas déclenchent un drapeau «1» d'intervalles entre clignements variables.

Le premier drapeau sert à déclencher une alarme, sonore par exemple, apte à réveiller le conducteur, tandis que le second drapeau renforce l'alarme, par exemple en augmentant le niveau sonore.

L'ordinogramme annexé à titre de planche 6 (figure 13) résume les différentes phases successives.

Le dialogue avec l'extérieur est réalisé, de préférence en mode série (CAN – VAN).

Le rétroviseur des figures 4 et 5 convient aussi bien pour un conducteur occupant le siège gauche que le siège droit, pour les pays à conduite à droite, et peut éventuellement être un rétroviseur extérieur, notamment du côté du conducteur.

Comme il va de soi, l'invention n'est pas limitée au mode de réalisation préféré décrit et illustré, ni à ses variantes mentionnées ci-dessus ; l'invention englobe au contraire

SAMSUNG EXHIBIT 1004
Page 192 of 404

ORIGINAL

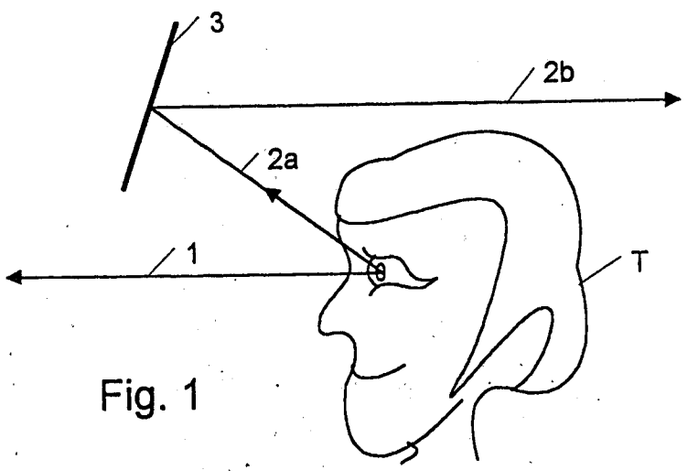

Fig. 1

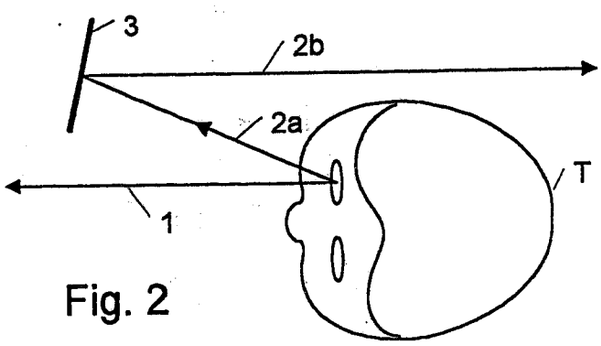

Fig. 2

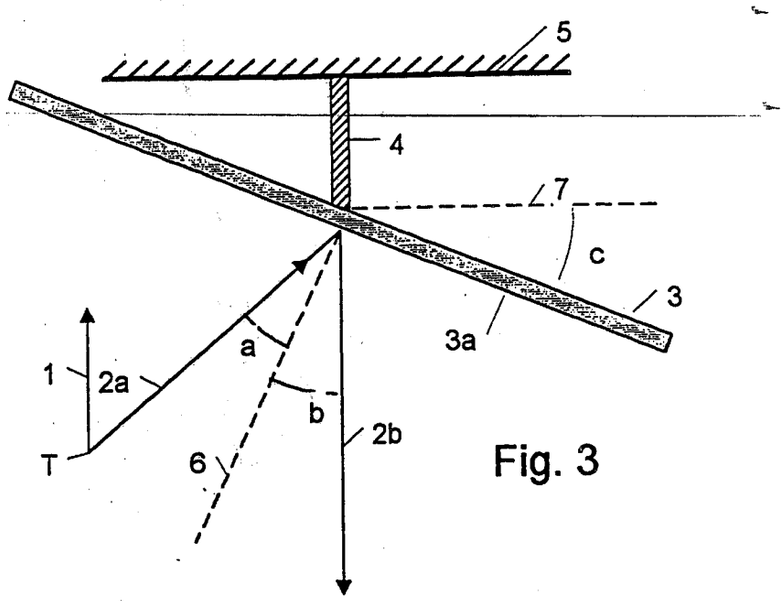

Fig. 3

ORIGINAL

FEUILLE AVANT RECTIFIC

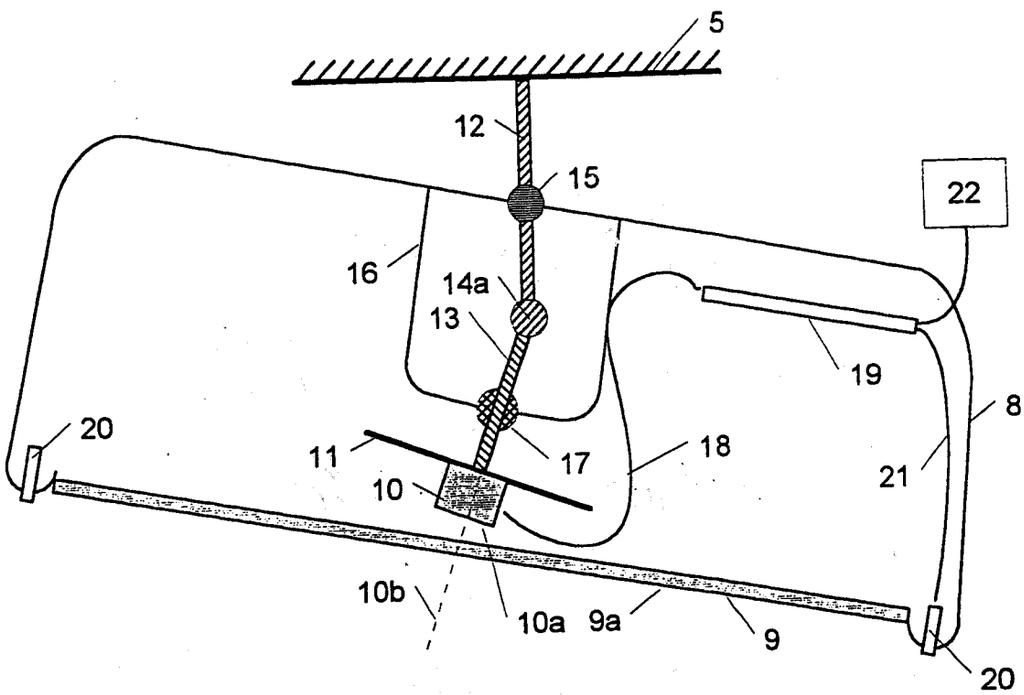

Fig. 4

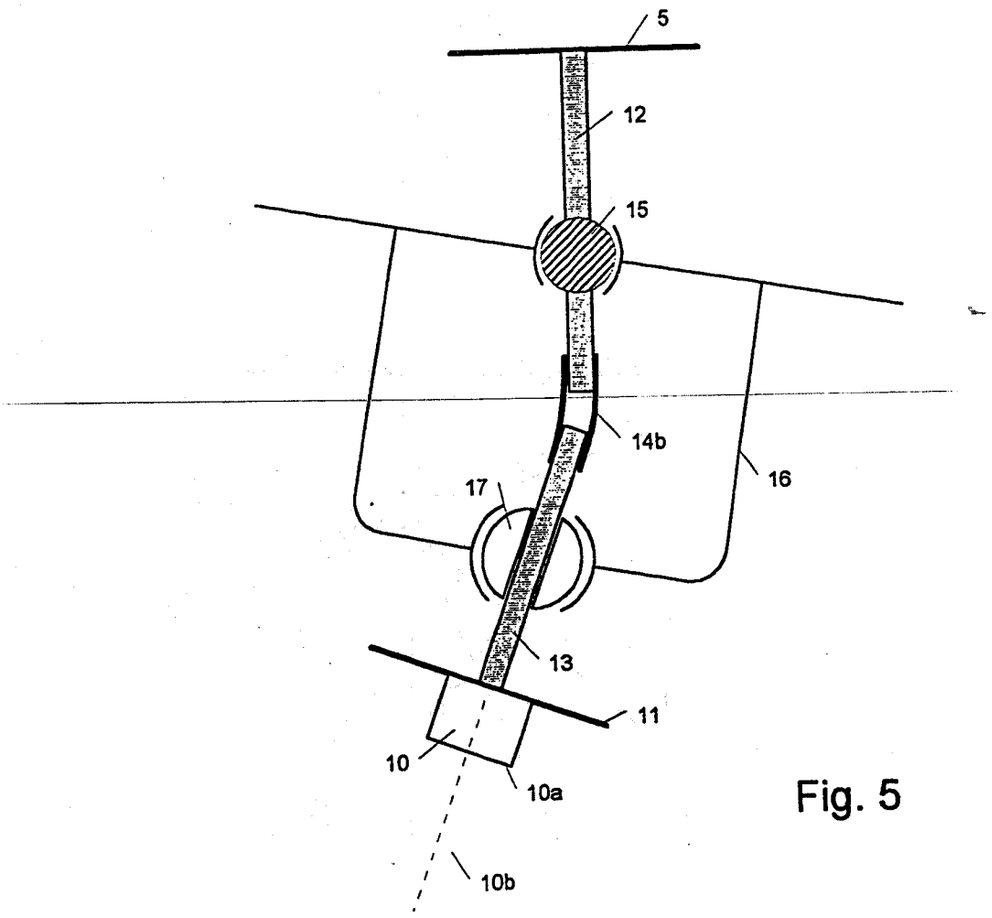

Fig. 5

ORIGINAL

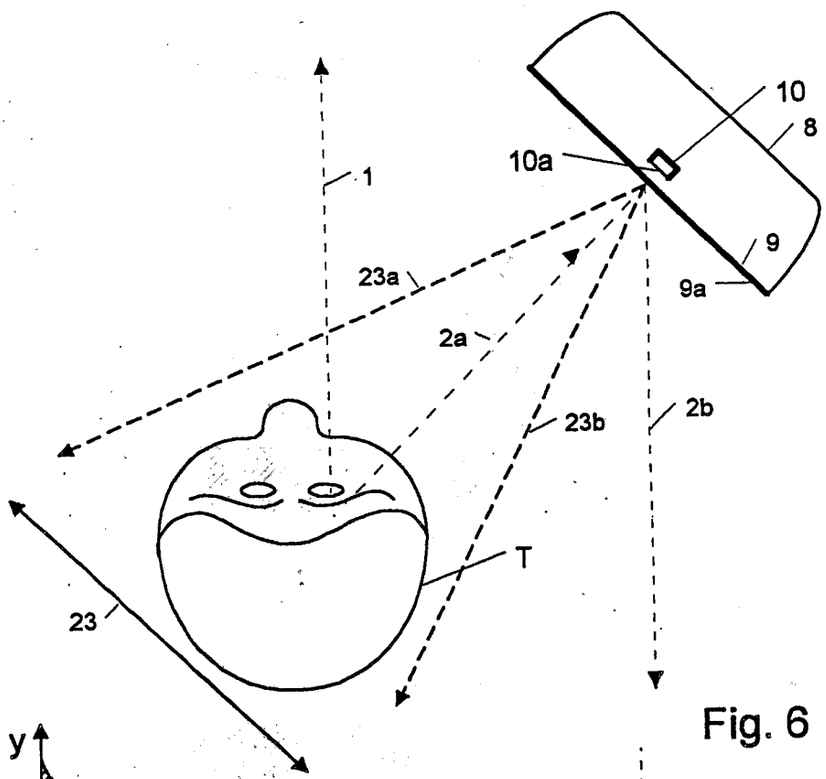

Fig. 6

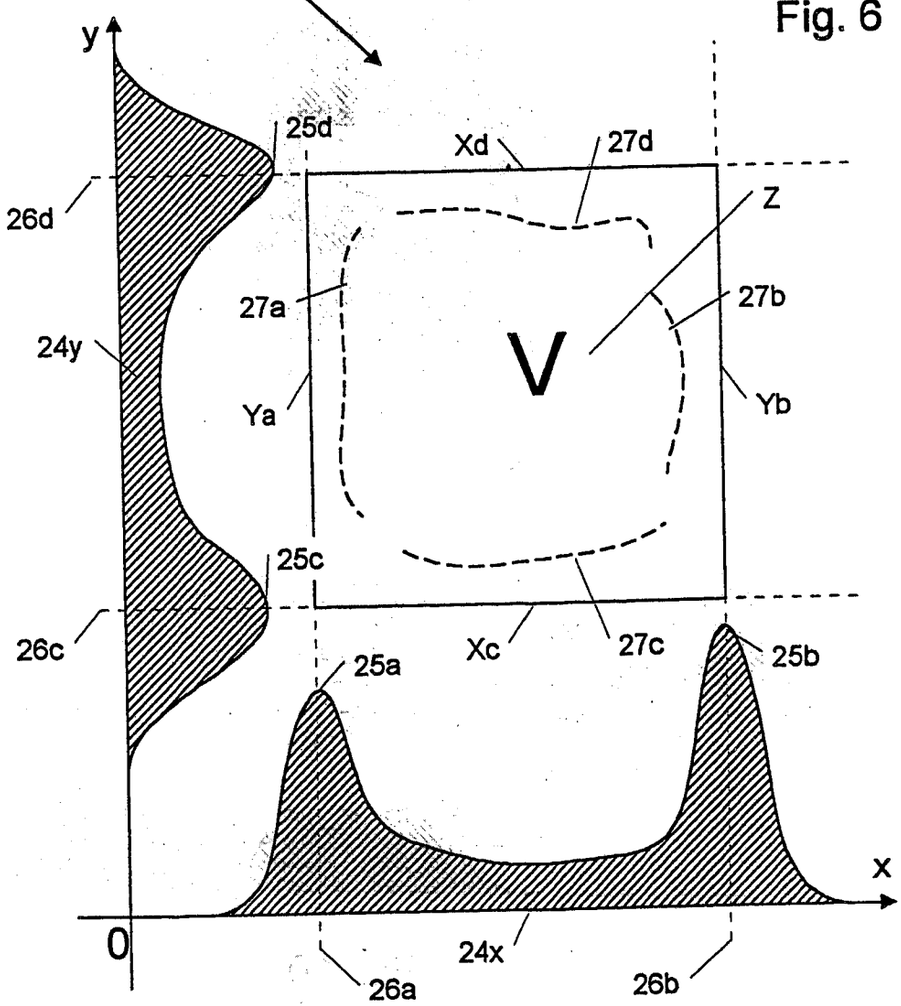

Fig. 7

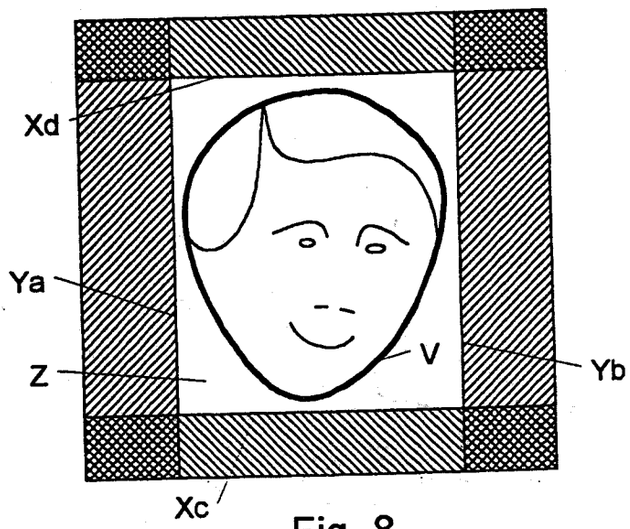

Fig. 8

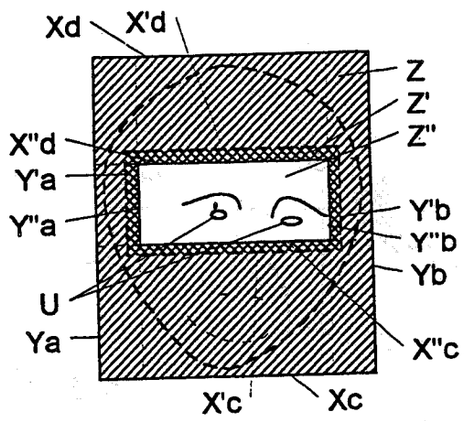

Fig. 9

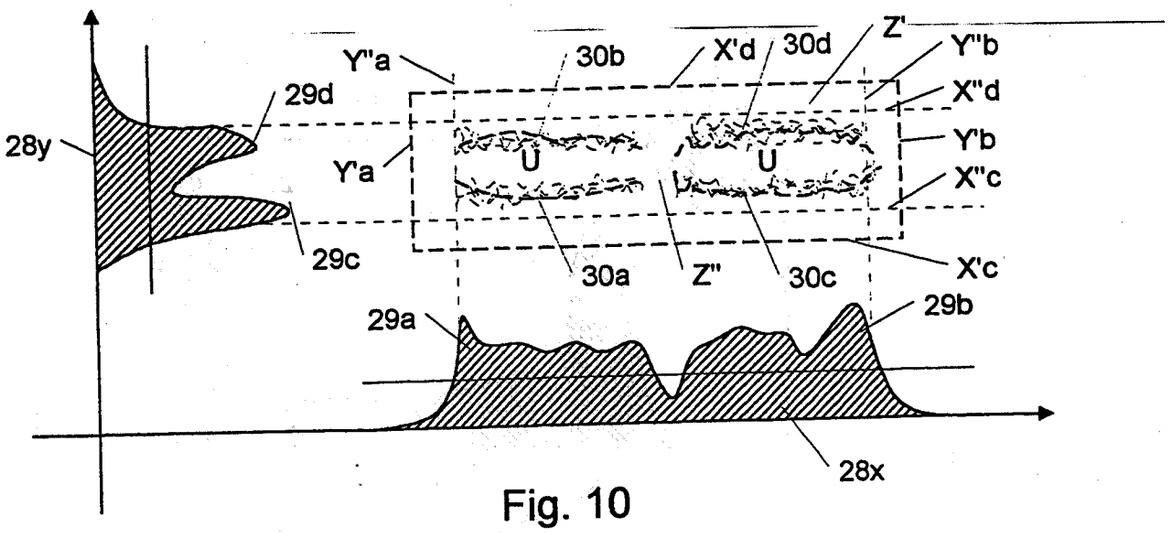

Fig. 10

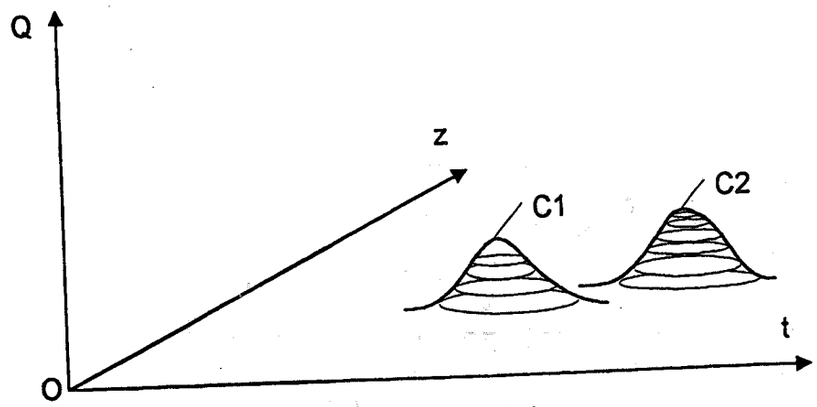

Fig. 11

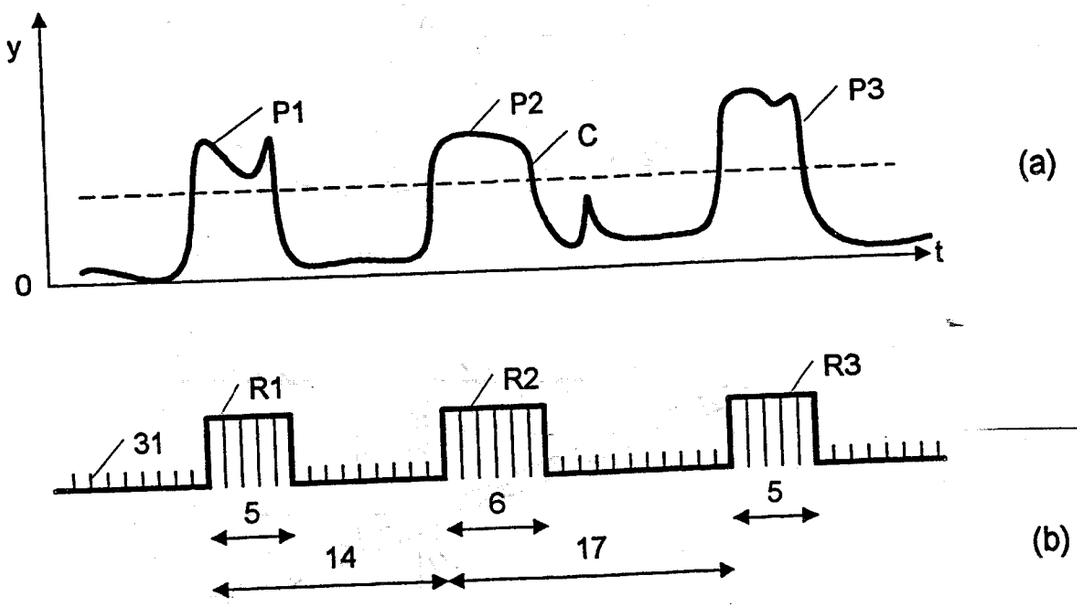

Fig. 12

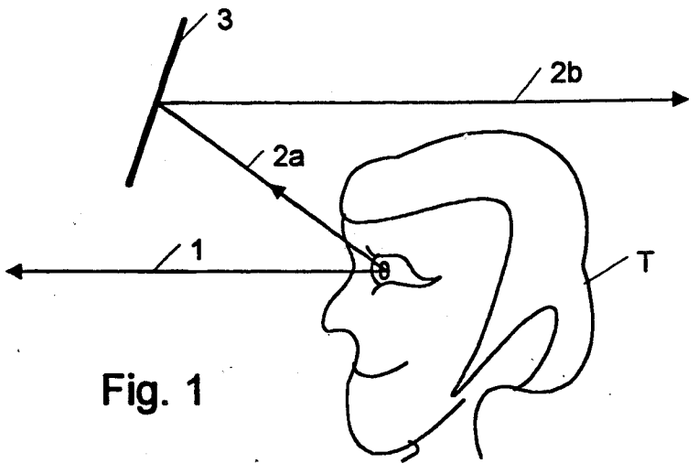

Fig. 1

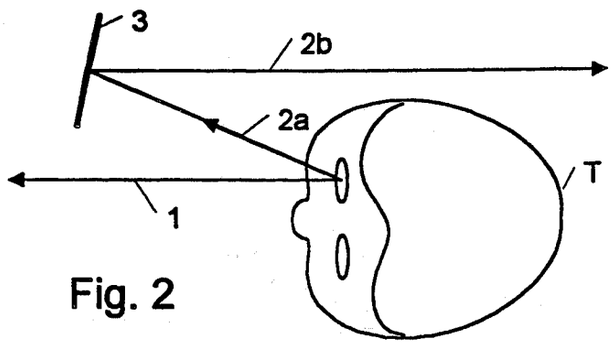

Fig. 2

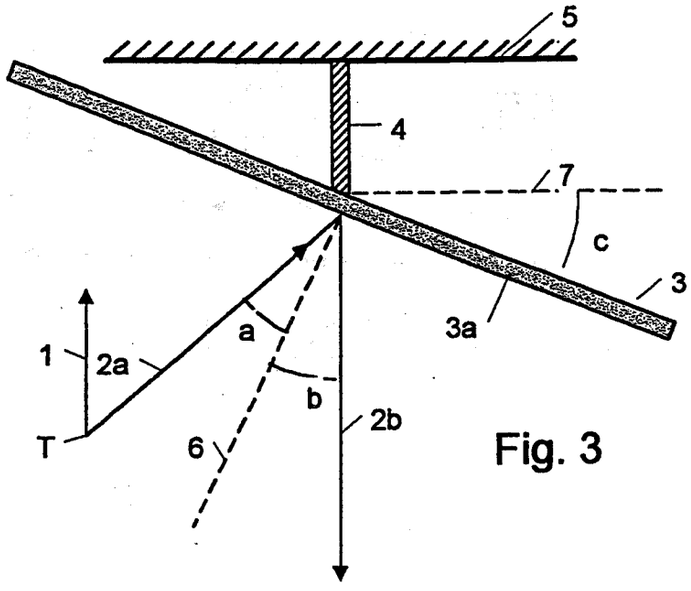

Fig. 3

FEUILLE RECTIFIÉE

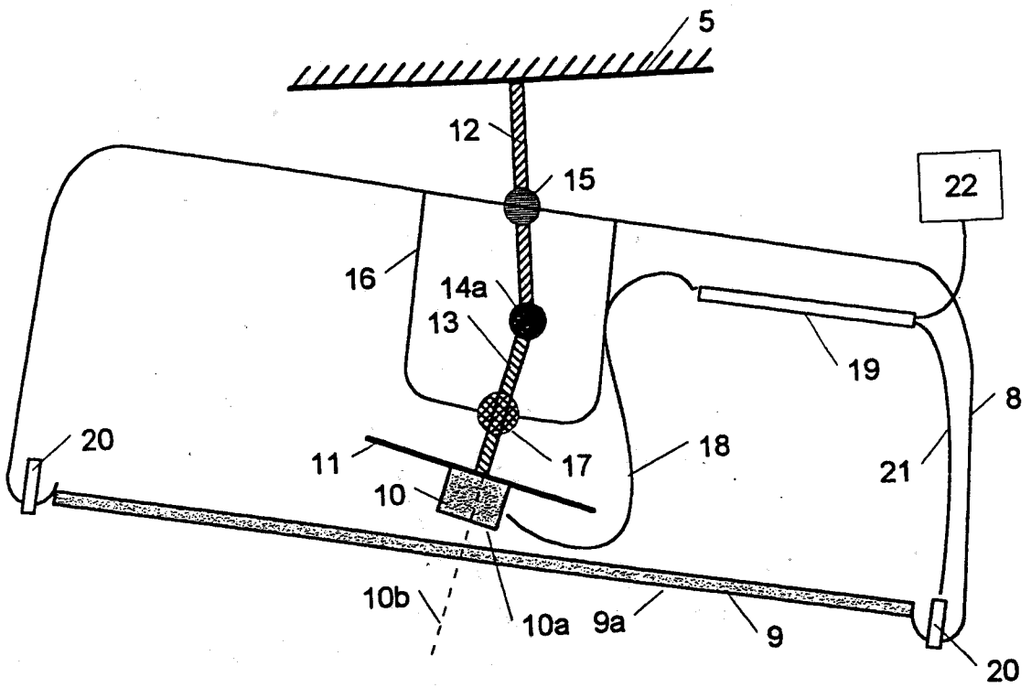

Fig. 4

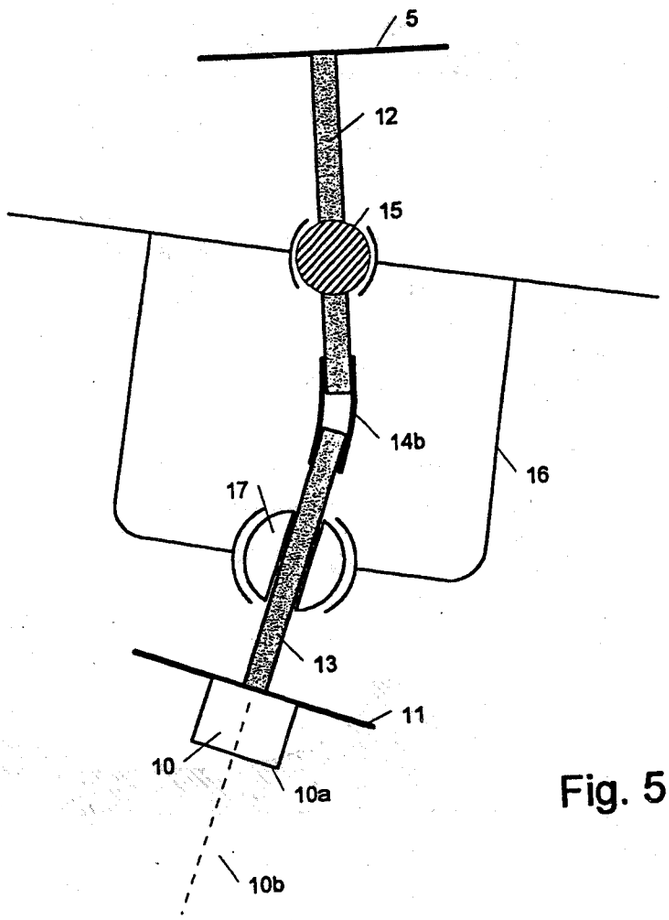

Fig. 5

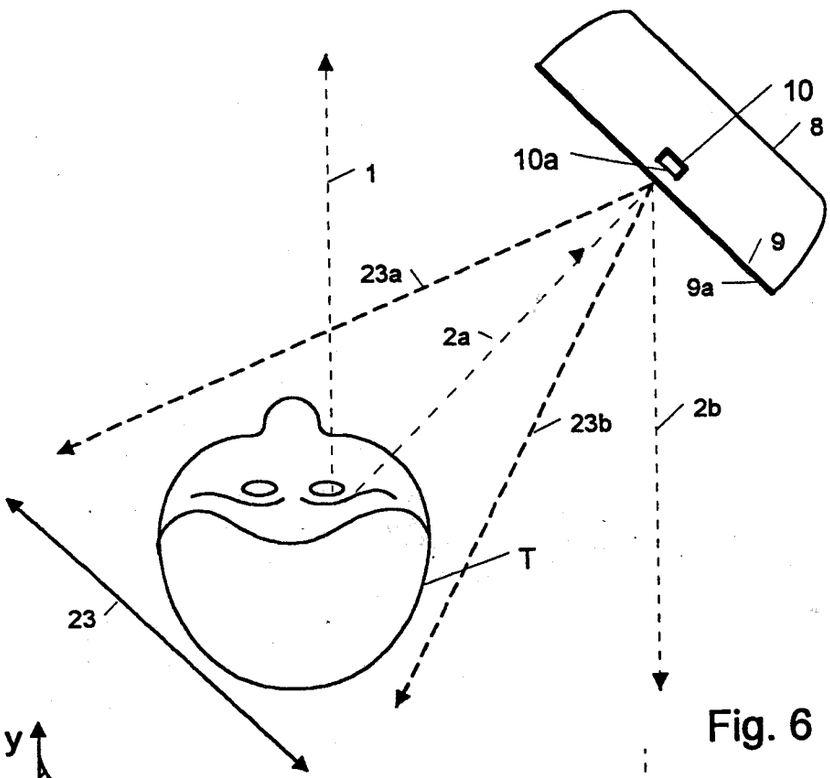
10
8
10a
1
9
23a
9a
2a
23b
2b
T
23

Fig. 6

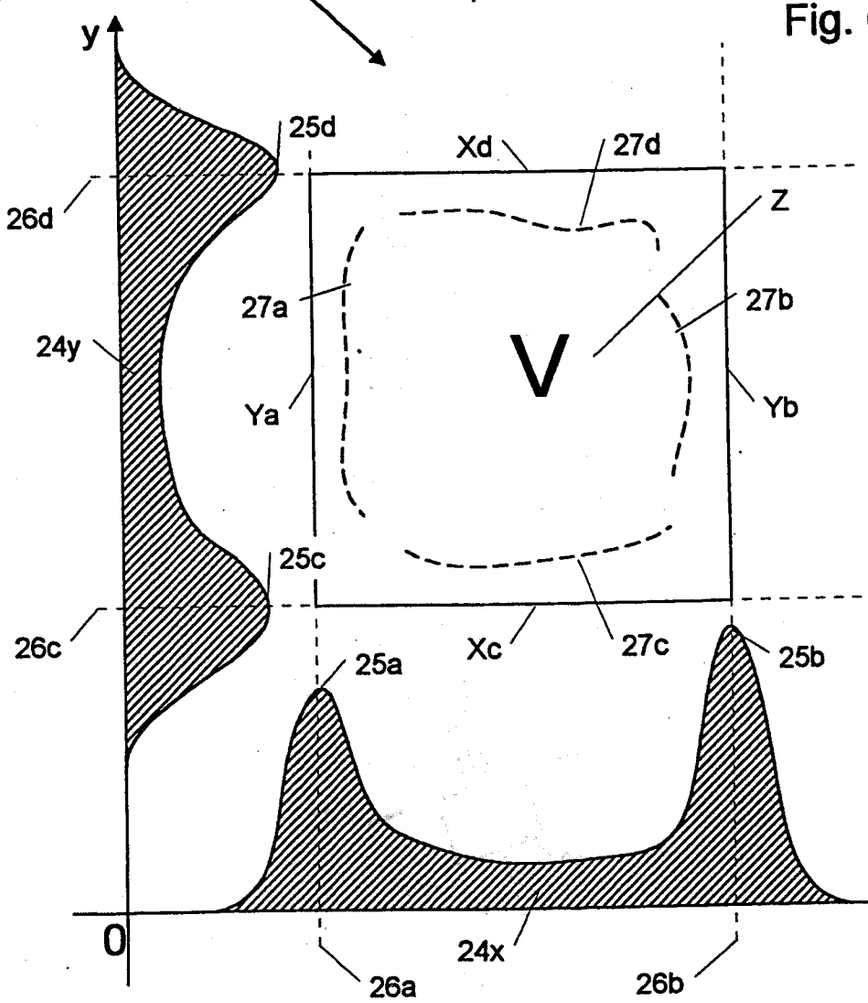
y
25d
Xd
27d
26d
Z
27a
27b
24y
V
Ya
Yb
25c
26c
Xc
27c
25b
25a
x
0
24x
26a
26b

Fig. 7

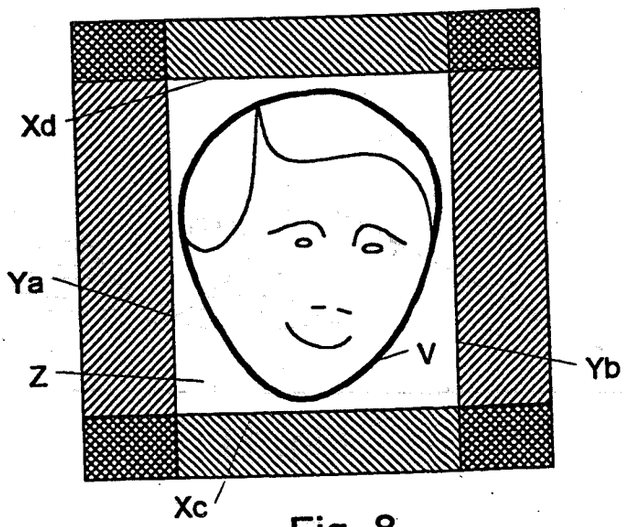

Fig. 8

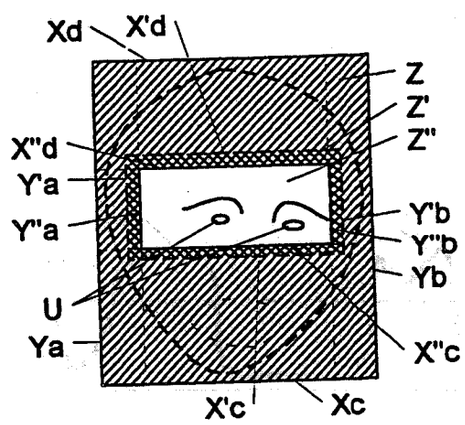

Fig. 9

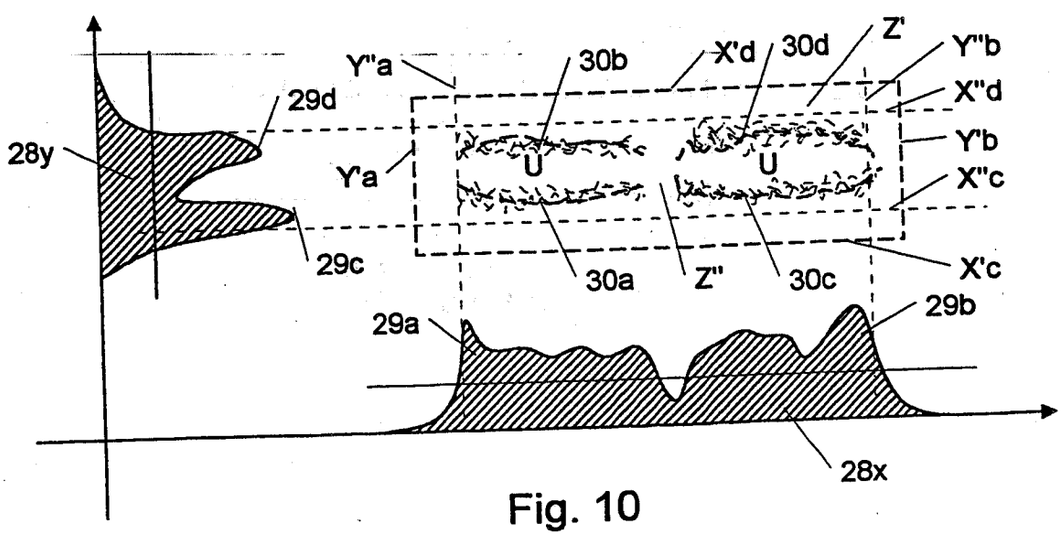

Fig. 10

FEUILLE RECTIFIÉE

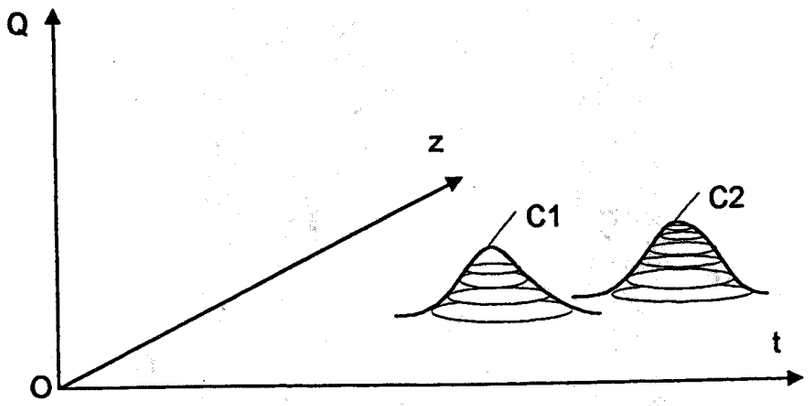

Fig. 11

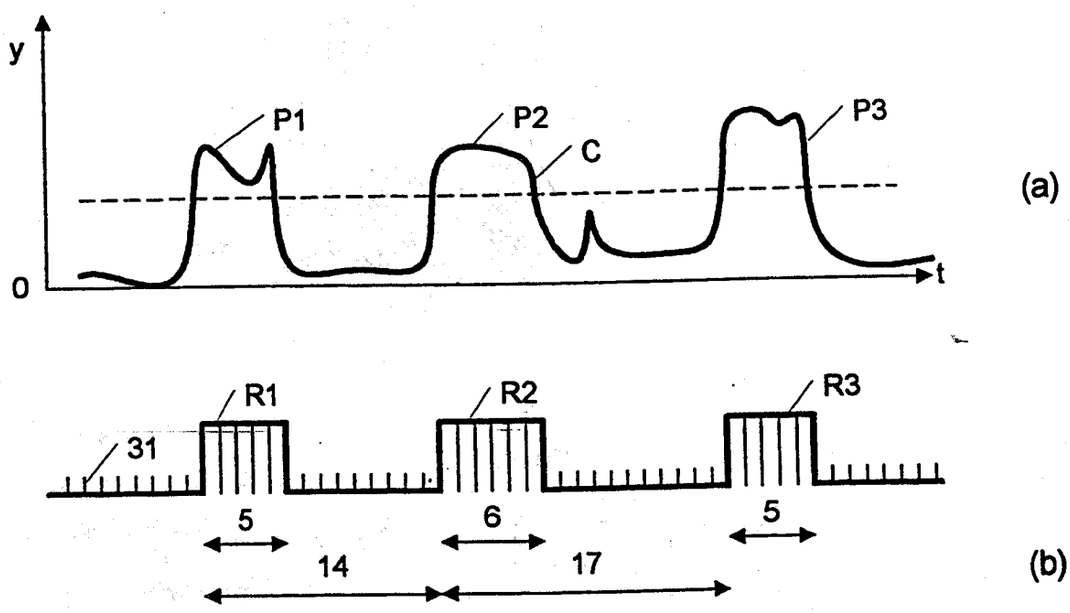

Fig. 12

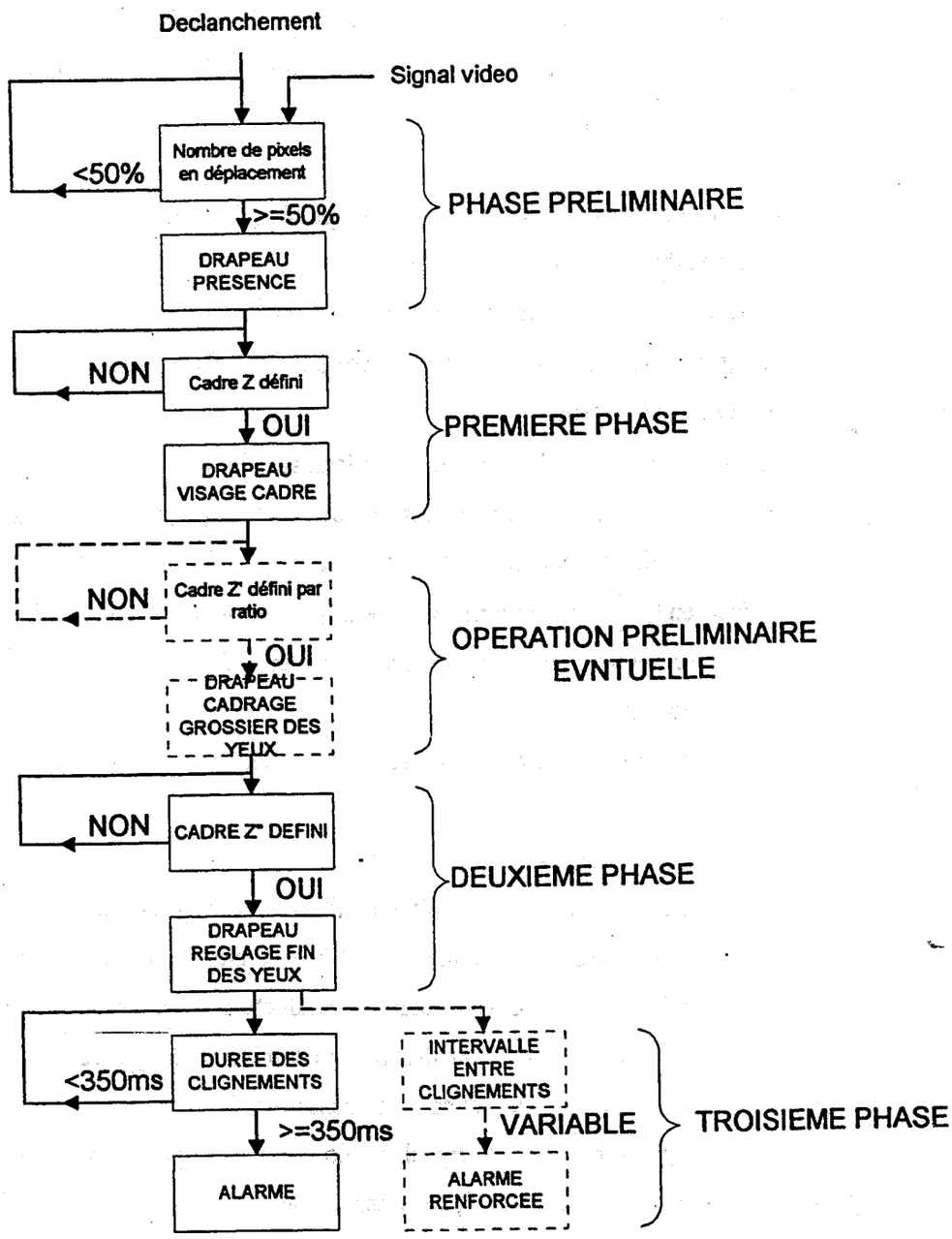
Declanchement
Signal video
Nombre de pixels en déplacement
<50%
>=50%
DRAPEAU PRESENCE
PHASE PRELIMINAIRE
NON
Cadre Z défini
OUI
DRAPEAU VISAGE CADRE
PREMIERE PHASE
NON
Cadre Z' défini par ratio
OUI
DRAPEAU CADRAGE GROSSIER DES YEUX
OPERATION PRELIMINAIRE EVNTUELLE
NON
CADRE Z" DEFINI
OUI
DRAPEAU REGLAGE FIN DES YEUX
DEUXIEME PHASE
<350ms
DUREE DES CLIGNEMENTS
>=350ms
ALARME
INTERVALLE ENTRE CLIGNEMENTS
VARIABLE
ALARME RENFORCEE
TROISIEME PHASE

Fig. 13

Documents reçus
le : 14-01-99
Non examinés par
l'I.N.P.I.

REVENDICATIONS

1. Procédé pour surveiller en continu l'état de vigilance du conducteur d'un véhicule automobile, afin de détecter et prévenir une tendance éventuelle à l'endormissement de celui-ci,

qui consiste

- à produire un signal vidéo représentatif, en temps réel, des images successives d'au moins le visage du conducteur ;
- à traiter ce signal, successivement et en continu, pour
  - détecter, dans ce signal, la portion correspondant effectivement à l'image de la tête du conducteur,
  - déterminer la valeur d'un paramètre relatif au clignement des paupières, qui se modifie notablement lors du passage de l'état éveillé à l'état somnolent du conducteur de part et d'autre d'un seuil, et
  - repérer, en temps réel, le franchissement, par la valeur de ce paramètre, de ce seuil représentatif du passage de l'état éveillé à l'état somnolent du conducteur ; et
- à déclencher, en réponse au franchissement de ce seuil, une alarme apte à réveiller le conducteur ;

et qui est caractérisé en ce que

- d'une part, le signal vidéo est produit en utilisant un capteur optoélectronique solidaire d'un rétroviseur du véhicule automobile, dimensionné et disposé pour recevoir essentiellement l'image du visage du conducteur en place sur son siège et ayant son axe optique de réception des rayons lumineux dirigé vers la tête du conducteur lorsque le rétroviseur est correctement orienté ; et
- d'autre part, le traitement dudit signal vidéo consiste, après avoir détecté la présence du conducteur à sa place, à, successivement et en continu ,
  - détecter, à partir d'une analyse des pixels en déplacement entre deux trames successives de même nature dudit signal vidéo, les déplacements horizontaux du conducteur, afin de cadrer le visage de celui-ci dans les trames correspondantes successives du signal vidéo,

SAMSUNG EXHIBIT 1004
Page 204 of 404

Documents reçus
le : 14-01-99
Non examinés par
l'I.N.P.I.

- détecter, à partir d'une analyse des pixels en déplacement entre deux trames successives de même nature dudit signal vidéo, les déplacements verticaux dans le visage, ainsi cadré, du conducteur, afin de cadrer les yeux de celui-ci,
- déterminer, à partir d'une analyse des pixels en déplacement entre deux trames successives de même nature dudit signal vidéo, les durées successives des clignements des yeux, ainsi cadrés, de celui-ci, ces durées constituant le dit paramètre,
- comparer ces durées successives des clignements, ainsi déterminées, à un seuil représentatif du passage de l'état éveillé à l'état somnolent du conducteur, et
- déclencher, lorsque les durées de clignement dépassent vers le haut le dit seuil, une alarme apte réveiller le conducteur.

2. Procédé selon la revendication 1, caractérisé en ce que ledit capteur est placé dans le boîtier du rétroviseur derrière la glace de celui-ci qui est constituée par un miroir sans tain, l'axe optique de réception (2a) dudit capteur étant symétrique à un axe (2b) orienté dans le plan vertical médian dudit véhicule, par rapport à un axe (6) orthogonal au dit miroir sans tain.
3. Procédé selon la revendication 1 ou 2, caractérisé en ce qu'on détecte la présence du conducteur à sa place en déterminant le nombre de pixels correspondants dans les trames successives de même nature du signal vidéo pour lesquels un déplacement significatif est détecté et en comparant ce nombre au nombre total de pixels par trame du signal vidéo, afin de déterminer si le rapport entre le nombre de pixels représentant un déplacement et le nombre total de pixels par trame dépasse un seuil représentatif du passage de l'absence de conducteur à sa place à la présence d'un conducteur à sa place.
4. Procédé selon la revendication 1, 2, ou 3 caractérise en ce qu'entre les phases de détection des déplacements horizontaux, afin de cadrer le visage du conducteur, et de détection des déplacements verticaux, afin de cadrer les yeux de celui-ci, on prévoit une phase de cadrage large des yeux en se limitant à une portion du visage cadré englobant les yeux et leur environnement immédiat, par application du rapport anthropométrique entre ladite portion et le visage entier d'une personne.
5. Procédé selon l'une quelconque des revendications précédentes, caractérisé en ce, simultanément à la phase de détermination des durées des clignements des yeux, on prévoit une phase de détermination des intervalles de temps séparant deux clignements

Documents reçus
le : 14-01-99
Non examinés par
l'I.N.P.I.

successifs de ceux-ci et on déclenche une alarme renforcée dès que ces intervalles de temps présentent une irrégularité qui dépasse un seuil déterminé.

6. Procédé selon l'une quelconque des revendications précédentes, caractérisé en ce qu'on réactualise en continu les données concernant au moins un des paramètres suivants : déplacements horizontaux, déplacements verticaux, durées des clignements des yeux, intervalles entre clignements successifs, afin de perfectionner les approximations des valeurs normales de ces paramètres pour le conducteur effectivement présent et à l'état éveillé.

7. Procédé selon l'une quelconque des revendications précédentes, caractérisé en ce que les différentes phases successives du procédé sont réalisées au moyen de programmes informatiques successifs portant sur le traitement des valeurs successives des pixels correspondants des trames de même nature du signal vidéo obtenu à partir dudit capteur.

8. Dispositif pour surveiller en continu l'état de vigilance du conducteur d'un véhicule automobile, afin de détecter et prévenir une tendance éventuelle à l'endormissement de celui-ci, qui met en œuvre le procédé selon l'une quelconque des revendications 1 à 7 et qui est caractérisé en ce qu'il comprend, en combinaison :

a) un capteur optoélectronique (10), qui, en combinaison avec une électronique associée (19), élabore, en réponse à la réception de rayons lumineux, un signal vidéo à trames de même nature, ou correspondantes, successives, ledit capteur étant solidaire d'un rétroviseur (8) du véhicule automobile et dimensionné et disposé pour recevoir essentiellement l'image du visage du conducteur en place sur son siège et ayant son axe optique (10b) de réception des rayons lumineux dirigé vers la tête (T) du conducteur lorsque le rétroviseur est correctement orienté ; *et*

b) au moins d'un circuit intégré comportant

- des moyens pour détecter la présence du conducteur à sa place dans le véhicule, et pour élaborer un signal de présence ;
- des moyens, activés par ce signal de présence, pour détecter, à partir d'une analyse des pixels en déplacement entre deux trames successives de même nature dudit signal vidéo, les déplacements horizontaux de dit conducteur, afin de cadrer le visage (V) de celui-ci dans les trames successives de même nature dudit signal vidéo, et pour élaborer un signal de fin de cadrage de visage ;

Documents reçus
le : 11-01-99
Non examinés par
l'I.N.P.I.

- des moyens, activés par ledit signal de fin de cadrage du visage, pour détecter, à partir d'une analyse des pixels en déplacement entre deux trames successives de même nature de la portion des trames successives de même nature dudit signal vidéo correspondant au cadrage du visage, les déplacements verticaux dans le visage, ainsi cadré, du conducteur, afin de cadrer les yeux (U) de celui-ci dans ladite portion des trames de ce signal, et pour élaborer un signal de fin de cadrage des yeux du conducteur ;
- des moyens, activés par ledit signal de fin de cadrage des yeux, pour déterminer, à partir d'une analyse des pixels en déplacement entre deux trames successives de même nature de la portion des trames successives de même nature dudit signal vidéo correspondant au cadrage des yeux, les durées successives des clignements des yeux du conducteur ;
- des moyens pour comparer ces durées successives des clignements, ainsi déterminées, à un seuil représentatif du passage de l'état éveillé à l'état somnolent du conducteur ; et
- des moyens pour déclencher, lorsque les durées des clignements dépassent ledit seuil, une alarme (22) apte à réveiller le conducteur.

9. Dispositif selon la revendication 8, caractérisé en ce que ledit capteur (10) est placé dans le boîtier du rétroviseur (8) derrière le miroir de celui-ci, qui est un miroir (9) sans tain, ledit capteur (10) étant porté par une première extrémité d'une première tige (13) traversant, à travers une rotule (17), un étrier (16) porté par le boitier du rétroviseur (8), à l'intérieur de celui-ci, la seconde extrémité de cette tige (13) étant articulée librement, au moyen d'un joint (14a,14b), à la première extrémité d'une seconde tige (12) traversant, à travers une rotule (15), le boitier du rétroviseur (8), tandis que la seconde extrémité de ladite seconde tige (12) est fixée à la carrosserie du véhicule (en 5) au dessus du pare-brise, de manière que l'axe optique de réception (2a) du dit capteur soit symétrique à un axe (2b) orienté dans le plan vertical médian dudit véhicule, par rapport à un axe orthogonal (6) au dit miroir sans tain.

10. Dispositif selon la revendication 8 ou 9,caractérisé en ce que lesdits moyens pour détecter la présence du conducteur à sa place et pour élaborer un signal de présence sont constitués par des moyens pour déterminer le nombre de pixels dans les trames successives de même nature dudit signal vidéo pour lesquels un déplacement significatif est détecté, des moyens pour comparer ledit nombre au nombre total de

Documents reçus
le : 14-01-99
Non examinés par
l'I.N.P.I.

pixels par trame du signal vidéo, afin de déterminer si le rapport entre le nombre de pixels correspondant à un déplacement et le nombre total de pixels par trame dépasse un seuil représentatif du passage de l'état d'absence de conducteur à sa place à l'état de présence d'un conducteur à sa place.

11. Dispositif selon la revendication 8, 9 ou 10, caractérisé en ce qu'il comprend en outre des moyens, activés par ledit signal de fin de cadrage du visage, pour sélectionner, dans ladite portion des trames successives dudit signal vidéo correspondant au cadrage du visage, une portion réduite correspondant à un cadrage large, ou grossier, des yeux du conducteur englobant les yeux et leur environnement immédiat par application du rapport anthropométrique entre ledit cadrage large et le visage entier d'une personne et des moyens pour élaborer un signal de fin de cadrage large des yeux, ce signal activant lesdits moyens pour détecter les déplacements verticaux dans le visage du conducteur.

12. Dispositif selon l'une quelconque des revendications 8 à 11, caractérisé en ce qu'il comporte des moyens, fonctionnant en parallèle avec lesdits moyens pour déterminer les durées successives des clignements des yeux et donc activés par ledit signal de fin de cadrage des yeux, pour déterminer les intervalles de temps séparant deux clignements successifs et pour déclencher une alarme renforcée dès que ces intervalles de temps présentent une irrégularité qui dépasse un seuil déterminé.

13. Dispositif selon l'une quelconque des revendications 8 à 12, caractérisé en ce qu'il comporte des moyens pour réactualiser en continu les données concernant au moins un des paramètres suivants : déplacements horizontaux, déplacements verticaux, durées des clignements des yeux, intervalles entre clignements successifs, afin de perfectionner les approximations des valeurs normales du paramètre impliqué pour le conducteur effectivement présent et à l'état éveillé.

14. Dispositif selon l'une quelconque des revendications 8 à 13, caractérisé en ce que ledit ensemble capteur opto-électronique(10) – unité électronique (19) produit un signal vidéo comportant une succession de trames correspondantes de même nature à succession de lignes constituées par une succession de pixels et traite le dit signal video pour successivement :

- déduire, des variations de la valeur ou intensité de chaque pixel entre une trame et la trame correspondante antérieure,

Documents reçus
le : 14.01.99
Non examinés par
l'I.N.P.I.

- d'une part, un signal binaire, noté DP, dont les deux valeurs possibles sont représentatives, l'une, d'une variation significative de la valeur du pixel et, l'autre, d'une non-variation significative de cette valeur, et
- d'autre part, un signal numérique, noté CO, à nombre réduit de valeurs possibles, ce signal étant représentatif de la grandeur de cette variation de la valeur du pixel ;

- répartir suivant une matrice, par roulement, des valeurs de ces deux signaux DP et CO pour une même trame qui défile à travers la matrice ; et
- déduire, de cette répartition matricielle, le déplacement recherché et ses paramètres de localisation et de direction.

15. Dispositif selon l'une quelconque des revendications 8 à 14, caractérisé en ce que ledit capteur (10), ladite électronique associée (19) et ledit circuit intégré sont constituées par une puce électronique (chip) disposée à l'intérieur du boitier du rétroviseur (8).

16. Rétroviseur de véhicule automobile, caractérisé en ce que son miroir est constitué par une glace sans tain (9) et en ce qu'il comporte, derrière cette glace, un capteur opto-électronique (10) qui coopère avec une unité électronique (19), produit un signal vidéo comportant une succession de trames correspondantes de même nature à succession de lignes constitué par une succession de pixels et traite le dit signal video pour successivement :

- déduire, des variations de la valeur ou intensité de chaque pixel entre une trame et la trame correspondante antérieure,
  - d'une part, un signal binaire, noté DP, dont les deux valeurs possibles sont représentatives, l'une, d'une variation significative de la valeur du pixel et, l'autre, d'une non-variation significative de cette valeur,et
  - d'autre part, un signal numérique, noté CO, à nombre réduit de valeurs possibles, ce signal étant représentatif de la grandeur de cette variation de la valeur du pixel ;
- répartir suivant une matrice, par roulement, des valeurs de ces deux signaux DP et CO pour une même trame qui défile à travers la matrice ;
- déduire, de cette répartition matricielle, le déplacement recherché et ses paramètres de localisation et de direction ; et
- déclencher un dispositif d'alarme (22) dès que ladite unité détermine que les mouvements verticaux des paupières d'une personne regardant la face avant (9*a*) de ladite glace correspondent à une durée des clignements des yeux qui dépasse un seuil

Documents reçus
le : 14.01.99
Non examinés par
l'I.N.P.I.

prédéterminé inclus dans l'intervalle temporel compris entre la durée des clignements d'une personne éveillée et celle d'une personne qui somnole..

17. Rétroviseur de véhicule automobile selon la revendication 16, caractérisé en ce que ledit capteur (10)), ladite électronique associée (19) et ledit circuit intégré sont constituées par une puce électronique (chip) disposée à l'intérieur du boitier du rétroviseur (8).

18. Rétroviseur de véhicule automobile selon la revendication 16 ou 17, caractérisé en ce qu'il porte en outre au moins une diode (20) électroluminescente au moins dans l'infra-rouge qui est activée au moins lorsque la luminosité ambiante devient insuffisante pour éclairer le visage du conducteur et en ce que ledit capteur optoélectronique (10) est sensible entre autres, aux radiations infra-rouges émises par ladite diode.

Vonda M. Wallace
Paralegal Specialist

AKt 34

MULTIPLE DEPENDENT CLAIM FEE CALCULATION SHEET
(FOR USE WITH FORM PTO-875)

SERIAL NO.

FILING DATE

APPLICANT(S) 09/600390

CLAIMS

	AS FILED		AFTER 1st AMENDMENT		AFTER 2nd AMENDMENT	
	IND.	DEP.	IND.	DEP.	IND.	DEP.
1	/					
2		/				
3	/					
4		/				
5		/				
6		/				
7	/					
8		/				
9	/					
10		/				
11		/				
12		/				
13		/				
14	/					
15		/				
16		/				
17		/				
18		/				
19		/				
20		/				
21		/				
22		/				
23		/				
24		/				
25		/				
26		/				
27		/				
28		/				
29		/				
30		/				
31		/				
32		/				
33		/				
34		/				
35		/				
36		/				
37		/				
38		/				
39	/					
40						
41						
42						
43						
44						
45						
46						
47						
48						
49						
50						
TOTAL IND.	6					
TOTAL DEP.	33					
TOTAL CLAIMS	39					

	*		*		*	
	IND.	DEP.	IND.	DEP.	IND.	DEP.
51						
52						
53						
54						
55						
56						
57						
58						
59						
60						
61						
62						
63						
64						
65						
66						
67						
68						
69						
70						
71						
72						
73						
74						
75						
76						
77						
78						
79						
80						
81						
82						
83						
84						
85						
86						
87						
88						
89						
90						
91						
92						
93						
94						
95						
96						
97						
98						
99						
100						
TOTAL IND.						
TOTAL DEP.						
TOTAL CLAIMS						

PTO-1360 (8-78)

*MAY BE USED FOR ADDITIONAL CLAIMS OR AMENDMENTS

U.S. DEPARTMENT OF COMMERCE
Patent and Trademark Office

SAMSUNG EXHIBIT 1004
Page 211 of 404

Application or Docket Number
09/600390

PATENT APPLICATION FEE DETERMINATION RECORD

Effective December 29, 1999

CLAIMS AS FILED - PART I

	(Column 1)	(Column 2)	SMALL ENTITY TYPE ☐		OTHER THAN SMALL ENTITY	
FOR	NUMBER FILED	NUMBER EXTRA	RATE	FEE	RATE	FEE
BASIC FEE				OR		840
TOTAL CLAIMS	39 minus 20=	* 19	X$ 9=	OR	X$18=	342
INDEPENDENT CLAIMS	6 minus 3 =	* 3	X39=	OR	X78=	234
MULTIPLE DEPENDENT CLAIM PRESENT			+130=	OR	+260=	
			TOTAL	OR	TOTAL	1416

* If the difference in column 1 is less than zero, enter "0" in column 2

CLAIMS AS AMENDED - PART II

AMENDMENT

	(Column 1) CLAIMS REMAINING AFTER AMENDMENT		(Column 2) HIGHEST NUMBER PREVIOUSLY PAID FOR	(Column 3) PRESENT EXTRA
Total	* 39	Minus	** 39	= 0
Independent	* 6	Minus	*** 6	= 0
FIRST PRESENTATION OF MULTIPLE DEPENDENT CLAIM				

SMALL ENTITY RATE	ADDITIONAL FEE	OR	OTHER THAN SMALL ENTITY RATE	ADDITIONAL FEE
X$ 9=		OR	X$18=	
X39=		OR	X78=	
+130=		OR	+260=	
TOTAL ADDIT. FEE		OR	TOTAL ADDIT. FEE	

AMENDMENT

	(Column 1) CLAIMS REMAINING AFTER AMENDMENT		(Column 2) HIGHEST NUMBER PREVIOUSLY PAID FOR	(Column 3) PRESENT EXTRA
Total	*	Minus	**	=
Independent	*	Minus	***	=
FIRST PRESENTATION OF MULTIPLE DEPENDENT CLAIM				

SMALL ENTITY RATE	ADDITIONAL FEE	OR	OTHER THAN SMALL ENTITY RATE	ADDITIONAL FEE
X$ 9=		OR	X$18=	
X39=		OR	X78=	
+130=		OR	+260=	
TOTAL ADDIT. FEE		OR	TOTAL ADDIT. FEE	

AMENDMENT

	(Column 1) CLAIMS REMAINING AFTER AMENDMENT		(Column 2) HIGHEST NUMBER PREVIOUSLY PAID FOR	(Column 3) PRESENT EXTRA
Total	*	Minus	**	=
Independent	*	Minus	***	=
FIRST PRESENTATION OF MULTIPLE DEPENDENT CLAIM				

SMALL ENTITY RATE	ADDITIONAL FEE	OR	OTHER THAN SMALL ENTITY RATE	ADDITIONAL FEE
X$ 9=		OR	X$18=	
X39=		OR	X78=	
+130=		OR	+260=	
TOTAL ADDIT. FEE		OR	TOTAL ADDIT. FEE	

* If the entry in column 1 is less than the entry in column 2, write "0" in column 3.
** If the "Highest Number Previously Paid For" IN THIS SPACE is less than 20, enter "20."
***If the "Highest Number Previously Paid For" IN THIS SPACE is less than 3, enter "3."
The "Highest Number Previously Paid For" (Total or Independent) is the highest number found in the appropriate box in column 1.

Form PTO 1130
(REV 2/94)

U.S. DEPARTMENT OF COMMERCE
Patent and Trademark Office

PACE DATA ENTRY CODING SHEET

1ST EXAMINER	L. WALLACE	DATE	
2ND EXAMINER		DATE	8/4/00

APPLICATION NUMBER	TYPE APPL	FILING DATE MONTH	DAY	YEAR	SPECIAL HANDLING	GROUP ART UNIT	CLASS	SHEETS OF DRAWING
09/600390	1	07	20	01	0	2736	340	20

TOTAL CLAIMS	INDEPENDENT CLAIMS	SMALL ENTITY?	FILING FEE	FOREIGN LICENSE	ATTORNEY DOCKET NUMBER
39	6	0	1946	Y	20046H-000600

CONTINUITY DATA

CONT CODE	STATUS CODE	PARENT APPLICATION SERIAL NUMBER	PCT APPLICATION SERIAL NUMBER	PARENT PATENT NUMBER	PARENT FILING DATE MONTH	DAY	YEAR
			PCT/				
			PCT/				
			PCT/				
			PCT/				
			PCT/				

PCT/FOREIGN APPLICATION DATA

FOREIGN PRIORITY CLAIMED	COUNTRY CODE	PCT/FOREIGN APPLICATION SERIAL NUMBER	FOREIGN FILING DATE MONTH	DAY	YEAR
Y	FRX	98/00328	01	15	98
Y	EPX	98/05383	08	25	98

SAMSUNG EXHIBIT 1004
Page 213 of 404

09/600390

UNITED STATES DEPARTMENT OF COMMERCE
Patent and Trademark Office
Address: ASSISTANT COMMISSIONER FOR PATENTS
Box PCT
Washington, D.C. 20231

09/600,390 PRIM P 20046H-00060

U.S. APPLICATION NO.		FIRST NAMED APPLICANT	ATTY. DOCKET NO.

5071

BAKAK S SANI
TOWNSEND AND TOWNSEND AND CREW
TWO EMBARCADERO CENTER
8TH FLOOR
SAN FRANCISCO CA 94111

INTERNATIONAL APPLICATION NO. PCT/EP99/00000

I.A. FILING DATE 01/19/99 PRIORITY DATE 01/15/98

DATE MAILED: 08/09/00

NOTIFICATION OF MISSING REQUIREMENTS UNDER 35 U.S.C. 371 IN THE UNITED STATES DESIGNATED/ELECTED OFFICE (DO/EO/US)

1. The following items have been submitted by the applicant or the IB to the United States Patent and Trademark Office as ☐ a Designated Office (37 CFR 1.494), ☒ an Elected Office (37 CFR 1.495):

- ☒ U.S. Basic National Fee.
- ☒ Copy of the international application in:
  - ☐ a non-English language.
  - ☒ English.
- ☐ Translation of the international application into English.
- ☐ Oath or Declaration of inventors(s) for DO/EO/US.
- ☐ Copy of Article 19 amendments.
- ☐ Translation of Article 19 amendments into English.
- ☒ The International Preliminary Examination Report in English and its Annexes, if any. ENTERED
- ☐ Translation of Annexes to the International Preliminary Examination Report into English.
- ☒ Preliminary amendment(s) filed 14 JUL 2000 and _____.
- ☒ Information Disclosure Statement(s) filed 14 JUL 2000 and _____.
- ☐ Assignment document.
- ☐ Power of Attorney and/or Change of Address.
- ☐ Substitute specification filed _____.
- ☐ Statement Claiming Small Entity Status.
- ☒ Priority Document.
- ☒ Copy of the International Search Report ☒ and copies of the references cited therein.
- ☐ Other:

2. The following items MUST be furnished within the period set forth below in order to complete the requirements for acceptance under 35 U.S.C. 371:

- ☐ a. Translation of the application into English. Note a processing fee will be required if submitted later than the appropriate 20 or 30 months from the priority date.
  - ☐ The current translation is defective for the reasons indicated on the attached Notice of Defective Translation.
- ☐ b. Processing fee for providing the translation of the application and/or the Annexes later that the appropriate 20 or 30 months from the priority date (37 CFR 1.492(f)).
- ☒ c. Oath or declaration of the inventors, in compliance with 37 CFR 1.497(a) and (b), identifying the application by the International application number and international filing date.
  - ☐ The current oath or declaration does not comply with 37 CFR 1.497(a) and (b) for the reasons indicated on the attached PCT/DO/EO/917.
- ☒ d. Surcharge for providing the oath or declaration later that the appropriate 20 or 30 months from the priority date (37 CFR 1.492(e)).

3. Additional claim fees of $_____ as a ☐ large entity ☐ small entity, including any required multiple dependent claim fee, are required. Applicant must submit the additional claim fees or cancel the additional claims for which fees are due (37 CFR 1.492(g)). See attached PTO-875.

ALL OF THE ITEMS SET FORTH IN 2(a)-2(d) AND 3 ABOVE MUST BE SUBMITTED WITHIN ONE MONTH FROM THE DATE OF THIS NOTICE OR BY ☐ 21 OR ☒ 31 MONTHS FROM THE PRIORITY DATE FOR THE APPLICATION, WHICHEVER IS LATER. FAILURE TO PROPERLY RESPOND WILL RESULT IN ABANDONMENT.

The time period set above may be extended by filing a petition and fee for extension of time under the provisions of 37 CFR 1.136(a).

4. Translation of the Annexes MUST be submitted no later that the time period set above or the annexes will be cancelled. Note processing fee will be required if submitted later than 30 months from the priority date.

5. ☐ The Article 19 amendments are cancelled since a translation was not provided by the appropriate 20 (37 CFR 1.494(d)) or 30 (37 CFR 1.495(d)) months from the priority date.

Applicant is reminded that any communication to the United States Patent and Trademark Office must be mailed to the address given in the heading and include the U.S. application no. shown above. (37 CFR 1.5)

A copy of this notice MUST be returned with this response.

Enclosed: ☐ PCT/DO/EO/917 ☐ Notice of Defective Translation
☐ PTO-875

Vonda M. Wallace
Paralegal Specialist
Telephone: (703) 305 3736

FORM PCT/DO/EO/905 (December 1997)

U.S NATIONAL STAGE WORKSHEET (DO/EO)

U.S. APPL. NO. 09/600390 INTERNATIONAL APPL. EP99/00300

APPLICATION FILED BY: 20 MOS., ____ OR 30 MOS., X SCREENED BY [redacted]
Vonda M. Wallace
Paralegal Specialist

INTERNATIONAL APPLICATION PAPERS IN THE APPLICATION FILE:

X International application
_ Article 19 amendments
X Priority Document(s) No. 2
_ Request Form PCT/RO/101
_ PCT/IB/302
_ PCT/IB/304
_ PCT/IB/306
_ PCT/IB/308
X PCT/IB/331
_ OTHER PCT/IB/_____
X PCT/IPEA/409 also 416

____ 409 annexes to IPER
____ PCT/ISA/210 (Search report)
X Search report References
____ Other Papers filed

WIPO PUBLICATION
PUBLICATION NO. WO99 136893
PUBLICATION DATE 22-JUN-99
PUBLICATION LANG., EN 48 15 14
NOT PUBLISHED
_____U.S. only _____Requested

CEIVED FROM THE APPLICANT: (other than checked above)

X National application basic fee paid
X Express Processing Requested
X Translation of the International Application
X Used the IB copy of the IA
X Description
X Claims____
X Drawings___
Foreign Language in drawing
Article 19 Amendments
Amendment used in application
Article 34 Amendment
Amendment used in application
DNA
194 transaction done

X Preliminary Amendment(s) filed 14 JUL 2000
____ second submission
X Information Disclosure Statement
____ second submission
____ Assignment
_____Forward to Assignment Branch
_____Substitute Specification_____
____ Small Entity Statement _____
_____type _____
X Oath/Declaration (date submitted 09 FEB 2001)
____ Not executed
X Executed
____ Power of Attorney
____ Change of Address

ISC Receipt of Request (PTO – 1399 Transmittal Letter) 14 JUL 2000
Acceptable oath/declaration received 09 FEB 2001
e) Date 09 FEB 2001
complete 35 USC 371 requirements met 09 FEB 2001

DATE NOTICE COMPLETED

O 903 Notice of Acceptance 08/15/01
O 905 Notice of Missing Requirements
O 917 Notice of A defective oath or declaration
O 916 Notice of defective response
O 913 Notice of defective translation
O 909 Notifiication of Abandonment

DO/EO BIBLIOGRAPHIC DATA ENTRY

SERIAL NUMBER: 09 / 600390
IA NUMBER: PCT/ EP99 / 00300
FAMILY NAME: PIRIM
GIVEN NAME: PATRICK
PRIORITY CLAIMED (Y/N): Y
NO BASIC FEE (Y/N): N
ATTORNEY DOCKET NUMBER: 20046H-00060
CORRESPONDENCE NAME/ADDRESS: CUSTOMER NUMBER: 000000

RECEIPT DATE: 07 / 14 / 00
IA FILING DATE: 01 / 15 / 99
DELAY WAIVED (Y/N): Y
DEMAND RECEIVED (Y/N): Y
PRIORITY DATE: 01 / 15 / 99
US DESIGNATED ONLY (Y/N): N
COUNTRY:
TELEPHONE 0000000000
FAX

NAME: BAKAK S SANI
TOWNSEND AND TOWNSEND AND CREW
STREET: TWO EMBARCADERO CENTER
8TH FLOOR
CITY: SAN FRANCISCO
STATE/COUNTRY: CA ZIP: 94111
EMAIL:
APPLICATION TITLES:
METHOD AND APPARATUS FOR DETECTON OF DROWSINESS

TAB TO LAST POSITION, PUSH SEND

Rec'd PCT/PTO 29 SEP 2000

I hereby certify that this correspondence is being deposited with the United States Postal Service as first class mail in an envelope addressed to:

Assistant Commissioner for Patents
Washington, D.C. 20231

On September 26, 2000

TOWNSEND and TOWNSEND and CREW LLP

By: _____

PATENT
Attorney Docket No.: 20046H-000600US
Client Reference No.: 048J US 3724

#3

MAIL DATE CANCELLED
OIPE JC147 SEP 27 2000 PATENT & TRADEMARK OFFICE
OIPE JC147 SEP 29 2000 PATENT & TRADEMARK OFFICE

IN THE UNITED STATES PATENT AND TRADEMARK OFFICE

In re application of:

PATRICK PIRIM, et al.

Application No.: 09/600,390

Filed: Herewith

For: METHOD AND APPARATUS FOR DETECTION OF DROWSINESS

Examiner: Unassigned

Art Unit: Unassigned

INFORMATION DISCLOSURE STATEMENT UNDER 37 CFR §1.97 and §1.98

Assistant Commissioner for Patents
Washington, D.C. 20231

Sir:

The references cited on attached form PTO-1449 are being called to the attention of the Examiner. Copies of the references are enclosed. It is respectfully requested that the cited references be expressly considered during the prosecution of this application, and the references be made of record therein and appear among the "references cited" on any patent to issue therefrom.

As provided for by 37 CFR 1.97(g) and (h), no inference should be made that the information and references cited are prior art merely because they are in this statement and no representation is being made that a search has been conducted or that this statement encompasses all the possible relevant information.

Applicant believes that no fee is required for submission of this statement, since it is being submitted prior to the first Office Action. However, if a fee is required, the Commissioner is authorized to deduct such fee from the undersigned's Deposit Account No. 20-1430. Please deduct any additional fees from, or credit any overpayment to, the above-noted Deposit Account.

Respectfully submitted,

Gerald T. Gray
Reg. No. 41,797

TOWNSEND and TOWNSEND and CREW LLP
Two Embarcadero Center, 8th Floor
San Francisco, California 94111-3834
Tel: 650-326-2400
Fax: 650-326-2422
GTG/dxm

SF 1138424 v1

FORM PTO-1449 (Modified)	Attorney Docket No.: 20046H-000600US	Application No.: 09/600390
LIST OF PATENTS AND PUBLICATIONS FOR APPLICANT'S INFORMATION DISCLOSURE STATEMENT (Use several sheets if necessary)	Applicant: PATRICK PIRIM, et al.	
	Filing Date: ~~Herewith~~ 2/9/01	Group: ~~Unassigned~~ 2632

Reference Designation — **U.S. PATENT DOCUMENTS** — Page 1

Examiner Initial	Document No.	Date	Name	Class	Sub-class	Filing Date (If Appropriate)
TM AA	4,259,665	03/31/81	Manning	340	575	05/29/79
___ AB	4,485,375	11/27/84	Hershberger	340	576	09/29/82
___ AC	4,555,697	11/26/85	Thackrey	340	575	02/17/84
___ AD	4,928,090	05/22/90	Yoshimi et al.	340	575	12/08/88
___ AE	5,195,606	03/23/93	Martyniuk	180	272	09/17/91
___ AF	5,353,013	10/04/94	Estrada	340	575	05/13/93
___ AG	5,402,109	03/28/95	Mannik	340	575	04/29/93
___ AH	5,469,143	11/21/95	Cooper	340	575	01/10/95
___ AI	5,682,144	10/28/97	Mannik	340	575	11/20/95
___ AJ	5,684,461	11/04/97	Jones	340	575	10/18/96
___ AK	5,689,241	11/18/97	Clarke, Sr. et al.	340	575	05/31/96
___ AL	5,813,993	09/29/98	Kaplan et al.	600	544	04/05/96
___ AM	5,841,354	11/24/98	Bae et al.	340	575	02/27/97

FOREIGN PATENT DOCUMENTS

	Document No.	Date	Country	Class	Sub-class	Translation (Yes/No)
TM AN	WO 97/01246	01/09/97	PCT	H04N	7/18	
TM AO	WO 98/05002	02/05/98	PCT	G06T	7/20	
TM AP	DE19715519A1	11/06/97	Germany	G08B	21/00	
___ AQ						
___ AR						
___ AS						

OTHER ART (Including Author, Title, Date, Pertinent Pages, Etc.)

TM AT	Ueno, H. et al.: "Development of Drowsiness Detection System" 1994 VEHICLE NAVIGATION & INFORMATION SYSTEMS CONFERENCE PROCEEDINGS, pages 15-20 [redacted], XP 000641294, 8/1994.
___ AU	
___ AV	
___ AW	
___ AX	

EXAMINER Mullen — DATE CONSIDERED 10/2/02

EXAMINER: Initial if reference considered, whether or not citation is in conformance with MPEP 609; Draw line through citation if not in conformance and not considered. Include copy of this form with next communication to applicant.

8/94

XP 000641294

A1–3

PUBLICATION DATE. 31. 08. 94
(further bibliographic data on next page)

G08B21/00A2

DEVELOPMENT OF DROWSINESS DETECTION SYSTEM

p15–20 = (6)

Hiroshi Ueno Masayuki Kaneda Masataka Tsukino

Vehicle Research Laboratory,
Nissan Research Center
NISSAN MOTOR Co., Ltd.
1, Natsushima-cho, Yokosuka, Kanagawa 237, Japan

Abstract: The development of technologies for preventing drowsiness at the wheel is a major challenge in the field of accident avoidance systems. Preventing drowsiness during driving requires a method for accurately detecting a decline in driver alertness and a method for alerting and refreshing the driver. As a detection method, the authors have developed a system that uses image processing technology to analyze images of the driver's face taken with a video camera. Diminished alertness is detected on the basis of the degree to which the driver's eyes are open or closed. This detection system provides a noncontact technique for judging various levels of driver alertness and facilitates early detection of a decline in alertness during driving.

1. Introduction

The growing number of traffic accident fatalities in Japan in recent years has become a problem of serious concern to society. Based on the results of accident analysis, the authors are engaged in research and development work on active safety systems that are intended to reduce the number of accidents causing death or injury. The key to driving safety and the prevention of accidents before they happen lies with the driver. For this reason, eliminating situations in which the driver is insecure is essential to accident prevention.

Accidents due to drowsiness at the wheel have a high fatality rate because of the marked decline in the driver's abilities of perception, recognition and vehicle control when sleepy. The prevention of such accidents is a major focus of effort in the field of active safety research.

Preventing accidents caused by drowsiness requires a technique for detecting sleepiness in a driver and a technique for arousing the driver from that sleepy condition. This paper describes a system that uses an image processing technique to recognize the open or closed state of the driver's eyes as a way of detecting drowsiness at the wheel. The results of various investigations are presented to show the effectiveness of this system in detecting a state of reduced alertness in the driver.

2. Drowsiness-Related Accidents

Drowsiness can be caused by various factors such as fatigue, lack of sleep and the use of medication. In addition, another factor that can be considered is the monotony of driving on expressways or in congested traffic.

The continued construction of highways and improvement of vehicle performance have made it possible for drivers to enjoy pleasant, comfortable motoring. On the other hand, drivers are more apt to operate their vehicles under monotonous driving conditions. This observation is proved by the findings of various surveys, which indicate that approximately 70% of the respondents said they have experienced drowsiness while driving.

Table 1 Techniques for Detecting Drowsiness

Detection Techniques		Description	Detection Accuracy	Practicality	Extendibility
Sensing of Human Physiological Phenomena	Physiological Signals	Detection by Changes in Brain Waves, Blinking, Heart Rate, Pulse Rate, Skin Electric Potential, etc.	◎	×	△
	Physical Reactions	Detection by Changes in Inclination Driver's Head, Sagging posture, Frequency at Which Eyes Close, Gripping force on Steering Wheel, etc.	◎	○	◎
Sensing of Driving Operation		Detection by Changes in Driving Operations (Steering, Accelerator, Braking, Shift Lever, etc.)	○	◎	×
Sensing of Vehicle Behavior		Detection by Changes in Vehicle Behavior (Speed, Lateral G, Yaw Rate, Lateral Position, etc.)	○	◎	×
Response of Driver		Detection by Periodic Request for Response	△	×	◎
Traveling Conditions		Detection by Measurement of Traveling Time and Conditions (Daytime or Nighttime, Speed, etc.)	×	○	◎

◎ : Very Good ○ : Good △ : Average × : Poor

0-7803-2105-7/94/$4.00 © 1994 IEEE

SAMSUNG EXHIBIT 1004
Page 220 of 404

An examination of the situations when drowsiness occurred shows that approximately two-thirds of the instances were on expressways. The vehicle speed at the time drowsiness occurred was over 80 km/h in about 60% of the instances and over 60 km/h in nearly 80%. These large percentages are due in part to the high incidence of drowsiness while driving on expressways. In view of these vehicle speeds, it is clear that sleepiness at the wheel is likely to result in a serious accident.

The time frame in which drowsiness most often occurs is from late at night to early morning, followed by the early afternoon hours. During these time frames, drowsiness occurs most often after less than one hour of continuous driving. This result indicates that drowsiness is not necessarily caused by long hours of continuous driving.

Among those who experienced drowsiness, over half also indicated that they felt anxious about falling asleep while driving.

In many instances, drivers are not conscious of becoming drowsy while driving. A consideration of the psychology of drivers suggests that a slight feeling of sleepiness is not regarded as a sufficient reason for stopping to rest. As a result, it is not unusual for drivers to subsequently fall asleep while continuing to drive. An active safety system that could effectively prevent drowsiness at the wheel would contribute to a large reduction in fatal and injury-causing accidents.

3. Techniques for Detecting Drowsiness in Drivers

The process of falling asleep at the wheel can be characterized by a gradual decline in alertness from a normal state due to monotonous driving conditions or other environmental factors; this diminished alertness leads to a state of fuzzy consciousness followed by the onset of sleep. The critical issue that a drowsiness detection system must address is the question of how to accurately and early detect drowsiness at the initial stage.

Possible techniques for detecting drowsiness in drivers can be broadly divided into five major categories, as shown in Table 1.

Among these different methods, the best detection accuracy is achieved with techniques that are based on physiological phenomena, which can be accomplished in two ways.

One approach would be to measure changes in physiological signals, such as brain waves, eye blinking, heart rate, pulse rate or skin electric potential, as a means of detecting a drowsy state. While this approach is suitable for making accurate and quantitative judgments of alertness levels, it would be annoying to drivers because the sensing electrodes would have to be attached directly to the body. Thus, it would be difficult to use a system based on this approach under real-world driving conditions. It also has the disadvantage of being ill-suited to measurement over a long period of time owing to the large effect of perspiration on the sensors.

The other approach in this category focuses on physical changes, such as the inclination of the driver's head, sagging posture, decline in gripping force on steering wheel or the open/closed state of the eyes. Ways of measuring these physical changes are classified as being either the contact type or the noncontact type. The former type involves the detection of movement by direct means, such as by using a hat or eye glasses or attaching sensors to the driver's body. The latter type makes use of optical sensors or video cameras to detect changes.

Detection methods that are superior in terms of practicality are ones that sense driving operation or vehicle behavior that is distinctly characteristic of a sleepy driver. The vehicle control systems that might be monitored for sensing driving operation include the steering wheel, accelerator, brake pedal or transmission shift lever. The vehicle behavior detected might be the vehicle speed, lateral acceleration, yaw rate or lateral displacement. Since these techniques allow noncontact detection of drowsiness, they do not give the driver any feeling of discomfort. On the negative side, they are subject to numerous limitations depending on the vehicle type and driving conditions. It would also be necessary to devise a different detection logic for each type of vehicle. Still another problem with this approach is that detection would not be possible at low speed.

This research focused on an investigation of a system for detecting changes in the degree of openness of the driver's eyes, which has a high correlation with drowsiness. In Table 1, this approach falls under the category of detection of physical changes in physiological phenomena. This particular method was selected because a practical drowsiness detection system would have to assure a high level of detection accuracy equivalent to that of methods based on physiological signals and an early detection at the initial stage. Moreover, the system should be able to detect drowsiness in the driver by means of a noncontact technique.

4. Drowsiness Detection by Image Recognition

4.1 Detection method

An investigation of the human eyes under a condition of reduced alertness indicated that the eyes are narrower than in a wide-awake state and that there are times when the eyes actually close. Fig.1 presents experimental results showing the alertness level and the number of times the driver's eyes closed for two or more seconds while driving on a test course. Good correlation is seen between the two sets of data. This result indicated that a reduced level of alertness could be detected with good accuracy by monitoring changes in the degree of openness of the driver's eyes.

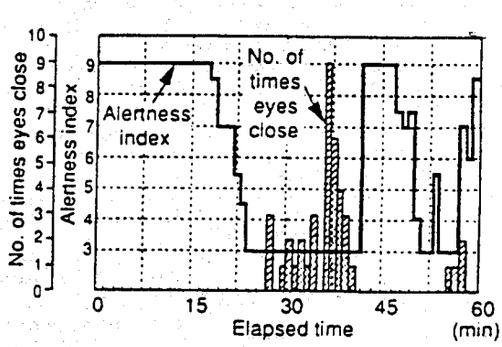

Fig.1 Number of times eyes close and alertness level

4.2 System configuration

The configuration of the drowsiness detection system is shown in Fig.2.

A small CCD camera positioned in front of the driver takes images of the driver's face. The facial image data are converted to binary image data by one frame and sent to the frame memory of the image processor. The frame memory stores each image in a 512x432 pixel format, with eight bits of memory capacity used for each pixel.

SAMSUNG EXHIBIT 1004
Page 221 of 404

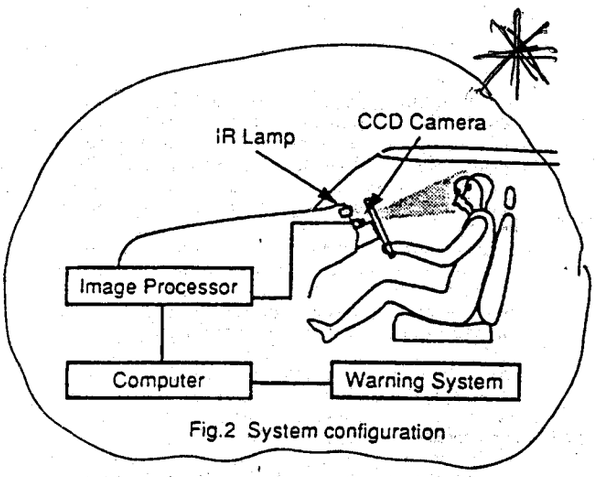

Fig.2 System configuration

A personal computer connected to the image processor controls the image processing procedure and judges the processed results.

An infrared lamp is provided in the instrument panel to facilitate the recording of facial images during nighttime driving.

4.3 Basic algorithm

4.3.1 Flowchart of major functions

A flowchart of the major functions of the drowsiness detection system is shown in Fig.3.

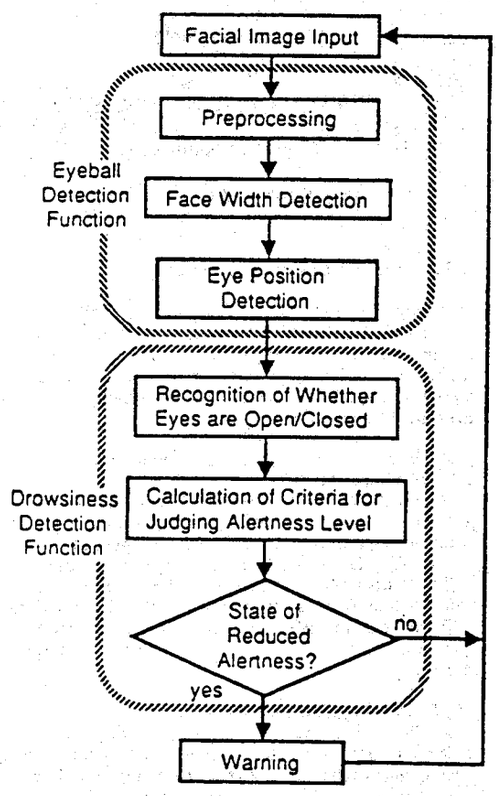

Fig.3 Flowchart of Major Functions

The functions of the system can be broadly divided into an eyeball detection function, comprising the first half of the processing routine, and a drowsiness detection function, comprising the second half.

4.3.2 Eyeball detection function

A brief explanation is given here of the eyeball detection procedure.

After inputting a facial image, preprocessing is first performed to binarize the image and remove noise, which makes it possible for the image to be accepted by the image processor.

The maximum width of the face is then detected so that the right and left edges of the face can be identified. After that, the vertical position of each eye is detected independently within an area defined by the center line of the face width and lines running through the outermost points of the face. On that basis, the area in which each eye is present is determined.

Once the areas of eye presence have been defined, they can be updated by tracking the movement of the eyes. The degree of eye openness is output simultaneously with the establishment or updating of the areas of eye presence. That value is used in judging whether the eyes are open or closed and also in judging whether the eyes have been detected correctly or not. If the system judges that the eyes have not been detected correctly, the routine returns to the detection of the entire face.

The following explains the eyeball detection procedure in the order of the processing operations.

(1) Preprocessing

The preprocessing operations include the binarization of a facial image to increase the processing speed and conserve memory capacity, and noise removal.

The image processor developed for this drowsiness detection system performs the expansion and contraction operations on the white pixels, and processing for noise removal is performed on the small black pixels of the facial image.

After the binarization, the noise removal procedure involves a expansion processing method combined with the use of a median filter. These preprocessing operations are sufficient to support detection of the vertical positions of the eyes.

However, following identification of the eye positions, the size of the eyes must be converted back to the original image format at the time the degree of eye openness is output. To facilitate that, data contraction is performed in the latter stage of preprocessing.

(2) Face width detection

The maximum width of the driver's face must be detected in order to determine the lateral positions of the areas in which the eyes are present.

Face width is detected by judging the continuity of white pixels and the pattern of change in pixel number. On that basis, the outer edges of the face are recognized and determined, as indicated in Fig.4.

(3) Detection of vertical eye positions

Each vertical eye position is detected independently within an area demarcated by the center line of the face, which is found from the face width, and straight lines running through the right and left outer edges of the face. In a binary image, the eyes become collections of black pixels along with the eyebrows, nostrils, mouth and other facial features.

These collections of black pixels are recognized on the basis of a labeling operation, and the position of each eye is extracted by judging the area of each label along with its

SAMSUNG EXHIBIT 1004
Page 222 of 404

aspect ratio and relative coordinate positions in the facial image.

Through this process of detecting each vertical eye position, the central coordinates of each eye are recognized. The coordinates serve as references for defining the areas of eye presence, as indicated in Fig.4.

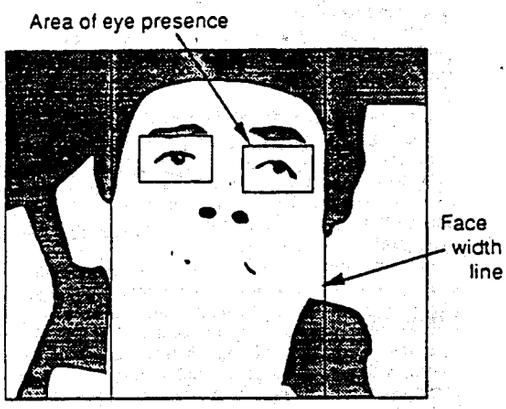

Fig.4 Image of face and objects of detection

(4) Eyeball tracking

A function for tracking the positions of the eyeballs is an important capability for achieving high-speed processing because it eliminates the need to process every frame in order to detect each eye position from the entire facial image. This function consists of a subroutine for updating the areas of eye presence and a subroutine for recognizing when tracking becomes impossible.

The basic concept of eyeball tracking is to update the area of eye presence, in which an eye search is made in the following frame, according to the central coordinates of the eye in the previous frame.

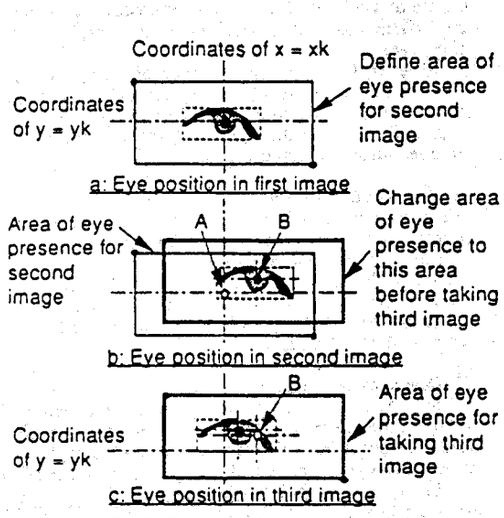

Fig.5 Tracking of eye position

The following is an explanation of the specific processing procedure.

The updating process involves defining an area of eye presence on the basis of the coordinates (xk, yk) at the point of intersection of center lines running through the Feret's diameter of the detected eye (Fig.5-a). The area thus defined becomes the area of eye presence in which the system searches for the eyeball in the image data of the next frame.

Owing to movement of the driver's head or other reasons, the center point (point B) of the eye detected in this area in the next frame changes relative to the center point (point A) of this area of eye presence (Fig.5-b). In relation to this change in eye position, the area of eye presence is updated in reference to the center point (point B) of the eye detected in this frame, and then the facial image data of the next frame are input. Similar to the previous step, the system then searches for the eyeball in the updated area of eye presence (Fig.5-c).

This process of using information on eye position to define the eye position for obtaining the next facial image data makes it possible to track the position of the eyeball. As is clear from this description, the size of the area of eye presence can be defined so as to correspond to these eye position changes.

If the eyes are tracked correctly, their degree of openness will always vary within a certain specified range for each individual driver, as illustrated in Fig.6. Consequently, if the value found by the system falls outside that range, it judges that the eyes are not being tracked correctly. The process of detecting the position of each eye from the entire facial image is then executed once more.

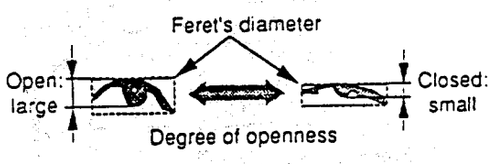

Fig.6 Degree of eye openness.

4.3.3 Drowsiness detection function

(1) Judgment of whether eyes are open/closed

A window is defined on the basis of the Feret's diameter of the eyes. The maximum number of black pixels along the vertical axis of the window indicates the degree of eye openness and is used as the basis for judging whether the eyes are open or closed (Fig.6).

(2) Criterion for judging eye open/closed state, and learning function

A threshold value is established for each driver for judging whether the person's eyes are open or closed. That criterion is based on the degree of eye openness observed for the individual when the eyes are open and closed.

The system also learns the size of each person's eyes in order to cope with variation in eye sizes due to individual differences or to differences in the distance between the camera and the driver's face at the time facial images are taken.

(3) Method of judging alertness level

As the level of alertness drops, rapid blinking gives way to the appearance of long intervals when the eyes are closed, which provides a basis for detecting drowsiness.

A specific method which we have devised for judging the level of alertness, is to count the number of times the eyes close within a specified interval.

SAMSUNG EXHIBIT 1004
Page 223 of 404

As shown in Fig.7, the method of counting the number of times the eyes close begins with the second consecutive closure. This is done to avoid including instances of eye closure due to blinking. In the figure, the numbers in the middle of the interval for judging the alertness level indicate the eye closure count. In this example, the system judged that the eyes closed four times. The specified interval for judging the alertness level with this system has been set at one minute.

This interval for judging the alertness level varies according to the processing speed determined from the ability of the image processor.

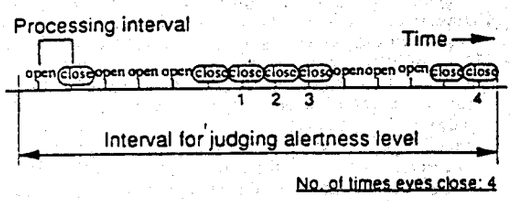

Fig.7 Method of totaling no. of times eyes close

Criteria for judging the alertness level on the basis of the eye closure count have been determined according to the results of driving tests in which drowsiness at the wheel was investigated.

5. Drowsiness Detection Performance

5.1 Alertness index

An alertness index has been devised for making quantitative judgments of a driver's state of drowsiness. This index is based on the assignment of points to brain waves, blinking and facial expression, which are known to vary according to a person's level of alertness. The point total provides a quantitative measure for judging the alertness level. The specific procedure for rating these three elements is outlined in Fig.8.

Rank	Brain waves	Blinking	Facial expression
3	No α 2 waves	Continuous rapid blinking	Rigid face muscles
2	Clusters of small amplitude α 2 waves	Appearance of slow blinking	Drooping of upper eyelids
1	Continuous appearance of large-amplitude α 2 waves	Eyes close for long intervals	Eyes half-closed

Fig.8 Evaluation criteria for brain waves, blinking and facial expression

As a person's level of alertness drops, a large number of α 2 waves appear and their amplitude becomes larger. Points are thus assigned according to the number and amplitude of the α 2 waves detected.

Blinking is rated by evaluating the measured waveforms for the upper and lower electric potential of the eyes. In a normal state of alertness, blinking appears as sharp spikes in the waveform. As the level of alertness drops, the spikes appear more frequently and subsequently lose their shape to become a gentle waveform when a person becomes drowsy. Eventually, the waveform shows trapezoidal shapes indicating that the eyes close for long intervals.

In terms of facial expression, a drowsy-looking appearance can be determined from the slackness of the face muscles and the drooping of the upper eyelids.

Each of the three elements is rated in this way using a three-point scale and the points are totaled to indicate the alertness level, which ranges from a wide-awake state (9 points) to a fuzzy state just prior to falling asleep (3 points).

The correlation between the alertness level, based on the alertness index, and the eye closure count was found from the driving test data. When the correlation was determined, states of alertness were divided into three levels: a wide-awake state (an alertness index of 9.0-8.0), a slight decline in alertness accompanied by a little drowsiness (7.5-6.5) and a large decline in alertness, a state ill-suited for continued driving (6.0-3.0).

5.2 Evaluation of detection performance

The drowsiness detection performance of the system was evaluated in laboratory tests and actual driving tests. In these tests, the subjects were asked to perform a simple task or to drive under monotonous conditions in order to induce drowsiness.

5.2.1 Laboratory tests

Fig.9 shows the laboratory test setup used to simulate a condition of driving while drowsy.

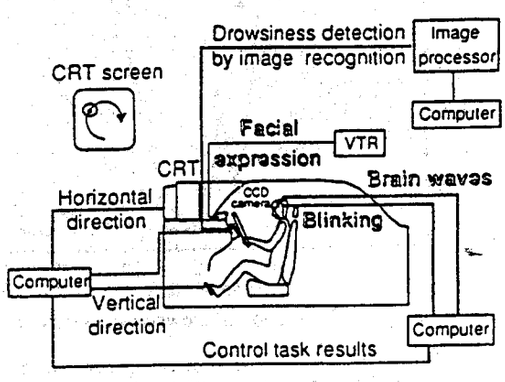

Fig.9 Schematic diagram of test setup

A CRT monitor was positioned in front of the driver's seat of a trimmed body, the interior of which was darkened by covering the windows.

A subject sat in the driver's seat and performed a simple task while watching the CRT screen. The task involved using a ring to pursue a target point that moved at a constant speed in a circular pattern on the screen. The subject moved the ring laterally by turning the steering wheel and vertically by operating the accelerator.

Because of the monotonous simplicity of this task, it soon made the subject drowsy. The subject's alertness level was judged by the methods explained earlier for detecting drowsiness from physiological signals. The performance of the drowsiness detection system was evaluated on the basis of the degree of correlation between the alertness level provided by the system and the alertness level obtained from the physiological signals.

SAMSUNG EXHIBIT 1004
Page 224 of 404

5.2.2 Driving tests using an actual vehicle

The subjects were asked to drive at a constant speed on a circuit around the periphery of a test course, and this monotonous driving served to induce a natural state of drowsiness.

Similar to the laboratory tests, a data recorder was used to record the subject's brain waves and eye electric potential in order to facilitate judgment of the alertness level on the basis of physiological signals. A CCD camera was installed on the steering column in the same position as in the laboratory tests. The camera recorded the facial image data used to facilitate drowsiness detection by means of image recognition. This image data was also used to facilitate judgment of the alertness level on the basis of facial expression of physiological signals.

Just as in the laboratory tests, drowsiness detection performance was evaluated by comparing the degree of correlation between the alertness level indicated by image recognition and that based on the physiological signals.

5.3 Evaluation results

Laboratory tests and driving tests were conducted several times with multiple subjects and comparisons were made of the alertness index scores found from the physiological signals and the alertness levels obtained by image recognition. An example of the results obtained is given in Fig.10.

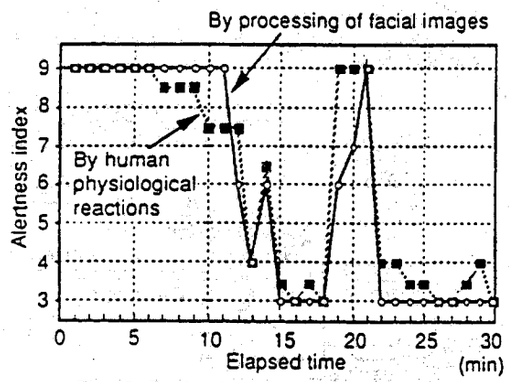

Fig.10 Evaluation of drowsiness detection

It is seen that the method of detecting alertness on the basis of image recognition accurately traced the changes that occurred in the alertness level with elapsed time.

Table 2 Correlation coefficients

Subject	No. of trials	Correlation coefficient (individual)	Correlation coefficient (average)
A	4	0.79	0.77
B	3	0.74	
C	3	0.83	
D	3	0.73	
E	4	0.78	

Using the method of counting the number of eye closures, alertness levels were determined for 17 facial image records obtained in laboratory tests involving five subjects.The results were then subjected to a correlation analysis and the correlation coefficients obtained are given in Table 2. These data also indicate that an exceptionally high level of detection performance was obtained with the system in these multiple tests involving a number of subjects.

The foregoing results thus confirmed that the drowsiness detection system based on image recognition can provide detection performance close to that of techniques using physiological signals, even though it is a noncontact method. This indicates that the system is capable of early detecting the initial stage of drowsiness .

Various factors can be considered as possible causes of a decline in the degree of correlation. One factor might be subjective variation on the part of the test engineers in judging intermediate levels of alertness from the physiological signal data. Another factor might be discrepancies between the timing for changes in alertness levels and the time when alertness judgments are made. In order to obtain better correlation with alertness levels based on physiological signals, further studies are needed, including possible alternation of the criteria for judging the alertness level.

6. Conclusion

The results of tests conducted under a drowsy state in the laboratory and on a test course with an actual vehicle have made the following points clear.

(1) Image recognition achieves highly accurate and reliable detection of drowsiness.

(2) Image recognition offers a noncontact approach to detecting drowsiness without annoyance and interference.

(3) A drowsiness detection system developed around the principle of image recognition judges the driver's alertness level on the basis of a continuous time history and provides early detection of reduced alertness at initial stage.

There are a number of issues that remain to be addressed in the drowsiness detection system. These include improvement of its adaptability to changes in ambient brightness, assurance of reliability and attainment of a more compact system design.

7. References

(1) T.Ishii, M.Hirose and H.Iwata, "Automatic Recognition of Driver's Facial Expression by Image Analysis.", Journal of JSAE, Vol. 41, No. 12 (1987), pp. 1398-1403 (in Japanese).

(2) M.Kaneda et al., "Development of a Drowsiness Warning System", The 14th International Conference on Enhanced Safety of Vehicles, Munich, 1994, 94-S3-O-08

SAMSUNG EXHIBIT 1004
Page 225 of 404

Rec'd PCT/PTO 09 FEB 2001

#4

PATENT

Attorney Docket No.: 20046H-000600US
Client Reference No.: 048J US 3724

IN THE UNITED STATES PATENT AND TRADEMARK OFFICE

In re U.S. National Phase of
PCT/EP99/00300 of:

PATRICK PIRIM, et al.

Application No.: 09/600,390

Filed: Date not yet assigned

For: METHOD AND APPARATUS FOR DETECTION OF DROWSINESS

PETITION TO EXTEND TIME

San Francisco, CA 94111
February 9, 2001

Box PCT
Assistant Commissioner for Patents
Washington, D.C. 20231

Sir:

Applicants petition the Assistant Commissioner of Patents to extend the time for response to the Notification of Missing Requirements dated August 9, 2000 for 5 months, from September 9, 2000 to February 9, 2001. An appropriate response in the form of a formal document transmittal and fee charge authorization is enclosed herewith.

Please charge the fee of $1,890.00 to the undersigned's Deposit Account No. 20-1430. Please charge any additional fees or credit overpayment to the above deposit account. This petition is submitted in triplicate.

02/13/2001 LLANDGRA 00000058 201430 09600390
01 FC:128 1890.00 CH

Respectfully submitted,

Babak S. Sani
Reg. No. 37,495

TOWNSEND and TOWNSEND and CREW LLP
Two Embarcadero Center, 8th Floor
San Francisco, California 94111-3834
Tel: 415-576-0200
Fax: 415-576-0300
GTG/TP

SF 1188337 v1

Please type a plus sign (+) inside this box → [+]

PTO/SB/01 (12-97)
Approved for use through 9/30/00. OMB 0651-0032
Patent and Trademark Office; U.S. DEPARTMENT OF COMMERCE
Under the Paperwork Reduction Act of 1995, no persons are required to respond to a collection of information unless it contains a valid OMB control number.

DECLARATION FOR UTILITY OR DESIGN PATENT APPLICATION (37 CFR 1.63)

☐ Declaration Submitted with Initial Filing OR ☒ Declaration Submitted after Initial Filing (surcharge (37 CFR 1.16 (e)) required)

Attorney Docket Number	20046H-000600US
First Named Inventor	Patrick Pirim
COMPLETE IF KNOWN	
Application Number	09/600,390
Filing Date	
Group Art Unit	
Examiner Name	

As a below named inventor, I hereby declare that:

My residence, post office address, and citizenship are as stated below next to my name.

I believe I am the original, first and sole inventor (if only one name is listed below) or an original, first and joint inventor (if plural names are listed below) of the subject matter which is claimed and for which a patent is sought on the invention entitled:

METHOD AND APPARATUS FOR DETECTION OF DROWSINESS

(Title of the Invention)

the specification of which
☐ is attached hereto
OR
☒ was filed on (MM/DD/YYYY) January 15, 1999 as United States Application Number or PCT International Application Number PCT/EP99/00300 and was amended on (MM/DD/YYYY) _____ (if applicable).

I hereby state that I have reviewed and understand the contents of the above identified specification, including the claims, as amended by any amendment specifically referred to above.

I acknowledge the duty to disclose information which is material to patentability as defined in 37 CFR 1.56.

I hereby claim foreign priority benefits under 35 U.S.C. 119(a)-(d) or 365(b) of any foreign application(s) for patent or inventor's certificate, or 365(a) of any PCT international application which designated at least one country other than the United States of America, listed below and have also identified below, by checking the box, any foreign application for patent or inventor's certificate, or of any PCT international application having a filing date before that of the application on which priority is claimed.

Prior Foreign Application Number(s)	Country	Foreign Filing Date (MM/DD/YYYY)	Priority Not Claimed	Certified Copy Attached? YES	NO
98 00378	France	1/15/1998	☐	☐	☐
PCT/EP98/05383	PCT	8/25/1998	☐	☐	☐
			☐	☐	☐
			☐	☐	☐

☐ Additional foreign application numbers are listed on a supplemental priority data sheet PTO/SB/02B attached hereto:

I hereby claim the benefit under 35 U.S.C. 119(e) of any United States provisional application(s) listed below.

Application Number(s)	Filing Date (MM/DD/YYYY)

☐ Additional provisional application numbers are listed on a supplemental priority data sheet PTO/SB/02B attached hereto.

Burden Hour Statement: This form is estimated to take 0.4 hours to complete. Time will vary depending upon the needs of the individual case. Any comments on the amount of time you are required to complete this form should be sent to the Chief Information Officer, Patent and Trademark Office, Washington, DC 20231. DO NOT SEND FEES OR COMPLETED FORMS TO THIS ADDRESS. SEND TO: Assistant Commissioner for Patents, Washington, DC 20231.

SAMSUNG EXHIBIT 1004
Page 227 of 404

Please type a plus sign (+) inside this box → +

PTO/SB/02A (3-97)
Approved for use through xx/xx/xx. OMB 0651-0032
Patent and Trademark Office: U.S. DEPARTMENT OF COMMERCE

Under the Paperwork Reduction Act of 1995, no persons are required to respond to a collection of information unless it contains a valid OMB control number.

DECLARATION

ADDITIONAL INVENTOR(S)
Supplemental Sheet
Page 1 of 1

Name of Additional Joint Inventor, if any:	☐ A petition has been filed for this unsigned inventor
Given Name (first and middle (if any))	Family Name or Surname
Thomas	Binford
Inventor's Signature: Thomas O Binford	Date: Feb 8, 2001
Residence: City: Cupertino	State: CA	Country: US	Citizenship: US
Post Office Address: 16012 Flintlock Road	
Post Office Address:	
City: Cupertino	State: CA	ZIP: 95014	Country: US

Name of Additional Joint Inventor, if any:	☐ A petition has been filed for this unsigned inventor
Given Name (first and middle (if any))	Family Name or Surname
Inventor's Signature	Date
Residence: City	State	Country	Citizenship
Post Office Address	
Post Office Address	
City	State	ZIP	Country

Name of Additional Joint Inventor, if any:	☐ A petition has been filed for this unsigned inventor
Given Name (first and middle (if any))	Family Name or Surname
Inventor's Signature	Date
Residence: City	State	Country	Citizenship
Post Office Address	
Post Office Address	
City	State	ZIP	Country

Burden Hour Statement: This form is estimated to take 0.4 hours to complete. Time will vary depending upon the needs of the individual case. Any comments on the amount of time you are required to complete this form should be sent to the Chief Information Officer, Patent and Trademark Office, Washington, DC 20231. DO NOT SEND FEES OR COMPLETED FORMS TO THIS ADDRESS. SEND TO: Assistant Commissioner for Patents, Washington, DC 20231.

PATENT - 09/756,956

Please type a plus sign (+) inside this box → [+]

PTO/SB/01 (12-97)
Approved for use through 9/30/00. OMB 0651-0032
Patent and Trademark Office; U.S. DEPARTMENT OF COMMERCE

Under the Paperwork Reduction Act of 1995, no persons are required to respond to a collection of information unless it contains a valid OMB control number.

DECLARATION — Utility or Design Patent Application

I hereby claim the benefit under 35 U.S.C. 120 of any United States application(s), or 365(c) of any PCT international application designating the United States of America, listed below and, insofar as the subject matter of each of the claims of this application is not disclosed in the prior United States or PCT international application in the manner provided by the first paragraph of 35 U.S.C. 112, I acknowledge the duty to disclose information which is material to patentability as defined in 37 CFR 1.56 which became available between the filing date of the prior application and the national or PCT international filing date of this application.

U.S. Parent Application or PCT Parent Number	Parent Filing Date (MM/DD/YYYY)	Parent Patent Number (If applicable)

☐ Additional U.S. or PCT international application numbers are listed on a supplemental priority data sheet PTO/SB/02B attached hereto.

As a named inventor, I hereby appoint the following registered practitioner(s) to prosecute this application and to transact all business in the Patent and Trademark Office connected therewith: ☐ Customer Number [ ] → Place Customer Number Bar Code Label here
OR
☒ Registered practitioner(s) name/registration number listed below

Name	Registration Number	Name	Registration Number
Babak S. Sani	37,495		
Gerald T. Grey	41,797		

☐ Additional registered practitioner(s) named on supplemental Registered Practitioner Information sheet PTO/SB/02C attached hereto.

Direct all correspondence to: ☐ Customer Number or Bar Code Label [ ] OR ☒ Correspondence address below

Name	Babak S. Sani				
Address	Townsend and Townsend and Crew LLP				
Address	Two Embarcadero Center, 8th fl.				
City	San Francisco	State	CA	ZIP	94111
Country	US	Telephone	415-576-0200	Fax	415-576-0300

I hereby declare that all statements made herein of my own knowledge are true and that all statements made on information and belief are believed to be true; and further that these statements were made with the knowledge that willful false statements and the like so made are punishable by fine or imprisonment, or both, under 18 U.S.C. 1001 and that such willful false statements may jeopardize the validity of the application or any patent issued thereon.

Name of Sole or First Inventor: ☐ A petition has been filed for this unsigned inventor

Given Name (first and middle [if any])	Family Name or Surname
Patrick	Pirim

Inventor's Signature						Date	18.1.01
Residence: City	Paris	State		Country	France	Citizenship	FR
Post Office Address	56 rue Patay						
Post Office Address							
City	Paris	State		ZIP	75013	Country	France

☒ Additional inventors are being named on the 1 supplemental Additional Inventor(s) sheet(s) PTO/SB/02A attached hereto

SAMSUNG EXHIBIT 1004
Page 229 of 404

Please type a plus sign (+) inside this box → [+]

PTO/SB/02A (3-97)
Approved for use through 9/30/98. OMB 0651-0032
Patent and Trademark Office; U.S. DEPARTMENT OF COMMERCE

Under the Paperwork Reduction Act of 1995, no persons are required to respond to a collection of information unless it contains a valid OMB control number.

DECLARATION

ADDITIONAL INVENTOR(S)
Supplemental Sheet
Page 1 of 1

Name of Additional Joint Inventor, if any:	☐ A petition has been filed for this unsigned inventor
Given Name (first and middle [if any])	Family Name or Surname
Thomas	Binford

Inventor's Signature						Date	
Residence: City	Cupertino	State	CA	Country	US	Citizenship	US
Post Office Address	16012 Flintlock Road						
Post Office Address							
City	Cupertino	State	CA	ZIP	95014	Country	US

Name of Additional Joint Inventor, if any:	☐ A petition has been filed for this unsigned inventor
Given Name (first and middle [if any])	Family Name or Surname

Inventor's Signature						Date	
Residence: City		State		Country		Citizenship	
Post Office Address							
Post Office Address							
City		State		ZIP		Country	

Name of Additional Joint Inventor, if any:	☐ A petition has been filed for this unsigned inventor
Given Name (first and middle [if any])	Family Name or Surname

Inventor's Signature						Date	
Residence: City		State		Country		Citizenship	
Post Office Address							
Post Office Address							
City		State		ZIP		Country	

Burden Hour Statement: This form is estimated to take 0.4 hours to complete. Time will vary depending upon the needs of the individual case. Any comments on the amount of time you are required to complete this form should be sent to the Chief Information Officer, Patent and Trademark Office, Washington, DC 20231. DO NOT SEND FEES OR COMPLETED FORMS TO THIS ADDRESS. SEND TO: Assistant Commissioner for Patents, Washington, DC 20231.

Please type a plus sign (+) inside this box → [+]

PTO/SB/01 (12-97)
Approved for use through 9/30/00 OMB 0651-0032
Patent and Trademark Office: U.S. DEPARTMENT OF COMMERCE

Under the Paperwork Reduction Act of 1995, no persons are required to respond to a collection of information unless it contains a valid OMB control number.

DECLARATION — Utility or Design Patent Application

I hereby claim the benefit under 35 U.S.C. 120 of any United States application(s), or 365(c) of any PCT international application designating the United States of America, listed below and, insofar as the subject matter of each of the claims of this application is not disclosed in the prior United States or PCT International application in the manner provided by the first paragraph of 35 U.S.C. 112, I acknowledge the duty to disclose information which is material to patentability as defined in 37 CFR 1.56 which became available between the filing date of the prior application and the national or PCT international filing date of this application.

U.S. Parent Application or PCT Parent Number	Parent Filing Date (MM/DD/YYYY)	Parent Patent Number (if applicable)

☐ Additional U.S. or PCT international application numbers are listed on a supplemental priority data sheet PTO/SB/02B attached hereto.

As a named inventor, I hereby appoint the following registered practitioner(s) to prosecute this application and to transact all business in the Patent and Trademark Office connected therewith: ☐ Customer Number [ ] → Place Customer Number Bar Code Label here

OR

☒ Registered practitioner(s) named in supplemental registered practitioner listed below

Name	Registration Number	Name	Registration Number
Babak S. Sani	37,495		
Gerald T. Grey	41,797		

☐ Additional registered practitioner(s) named on supplemental Registered Practitioner information sheet PTO/SB/02C attached hereto.

Direct all correspondence to: ☐ Customer Number or Bar Code Label [ ] OR ☒ Correspondence address below

Name	Babak S. Sani				
Address	Townsend and Townsend and Crew LLP				
Address	Two Embarcadero Center, 8th Fl.				
City	San Francisco	State	CA	ZIP	94111
Country	US	Telephone	415-576-0200	Fax	415-576-0300

I hereby declare that all statements made herein of my own knowledge are true and that all statements made on information and belief are believed to be true; and further that these statements were made with the knowledge that willful false statements and the like so made are punishable by fine or imprisonment, or both, under 18 U.S.C. 1001 and that such willful false statements may jeopardize the validity of the application or any patent issued thereon.

Name of Sole or First Inventor: ☐ A petition has been filed for this unsigned inventor

Given Name (first and middle if any)	Family Name or Surname
Patrick	Piram

Inventor's Signature						Date	
Residence: City	Paris	State		Country	France	Citizenship	FR
Post Office Address	56 rue Patay						
Post Office Address							
City	Paris	State		ZIP	75013	Country	France

☒ Additional inventors are being named on the 1 supplemental Additional Inventor(s) sheet(s) PTO/SB/02A attached hereto.

SAMSUNG EXHIBIT 1004
Page 231 of 404

Please type a plus sign (+) inside this box → [+]

PTO/SB/01 (12-97)
Approved for use through xx/xx/xxxx. OMB 0651-xxxx
Patent and Trademark Office: U.S. DEPARTMENT OF COMMERCE
Under the Paperwork Reduction Act of 1995, no persons are required to respond to a collection of information unless it contains a valid OMB control number.

DECLARATION FOR UTILITY OR DESIGN PATENT APPLICATION (37 CFR 1.63)

Attorney Docket Number	200407P-000000US
First Named Inventor	Patrick Pirim
COMPLETE IF KNOWN	
Application Number	09/600,390
Filing Date	
Group Art Unit	
Examiner Name	

☐ Declaration Submitted with Initial Filing OR ☒ Declaration Submitted after Initial Filing (surcharge (37 CFR 1.16 (e)) required)

As a below named inventor, I hereby declare that:

My residence, post office address, and citizenship are as stated below next to my name.

I believe I am the original, first and sole inventor (if only one name is listed below) or an original, first and joint inventor (if plural names are listed below) of the subject matter which is claimed and for which a patent is sought on the invention entitled:

METHOD AND APPARATUS FOR DETECTION OF DROWSINESS

(Title of the Invention)

the specification of which

☐ is attached hereto

OR

☒ was filed on (MM/DD/YYYY) January 15, 1999 as United States Application Number or PCT International Application Number

Application Number PCT/EP99/00378 and was amended on (MM/DD/YYYY) _____ (if applicable).

I hereby state that I have reviewed and understand the contents of the above identified specification, including the claims, as amended by any amendment specifically referred to above.

I acknowledge the duty to disclose information which is material to patentability as defined in 37 CFR 1.56.

I hereby claim foreign priority benefits under 35 U.S.C. 119(a)-(d) or 365(b) of any foreign application(s) for patent or inventor's certificate, or 365(a) of any PCT international application which designated at least one country other than the United States of America, listed below and have also identified below, by checking the box, any foreign application for patent or inventor's certificate, or of any PCT international application having a filing date before that of the application on which priority is claimed.

Prior Foreign Application Number(s)	Country	Foreign Filing Date (MM/DD/YYYY)	Priority Not Claimed	Certified Copy Attached? YES	NO
98 00378	France	1/15/1998	☐	☐	☐
PCT/EP98/05383	PCT	8/25/1998	☐	☐	☐

☐ Additional foreign application numbers are listed on a supplemental priority data sheet PTO/SB/02B attached hereto

I hereby claim the benefit under 35 U.S.C. 119(e) of any United States provisional application(s) listed below.

Application Number(s)	Filing Date (MM/DD/YYYY)

☐ Additional provisional application numbers are listed on a supplemental priority data sheet PTO/SB/02B attached hereto

Burden Hour Statement: This form is estimated to take 0.4 hours to complete. Time will vary depending upon the needs of the individual case. Any comments on the amount of time you are required to complete this form should be sent to the Chief Information Officer, Patent and Trademark Office, Washington, DC 20231. DO NOT SEND FEES OR COMPLETED FORMS TO THIS ADDRESS. SEND TO: Assistant Commissioner for Patents, Washington, DC 20231.

SAMSUNG EXHIBIT 1004
Page 232 of 404

Rec'd PCT/PTO 09 F[illegible] 2001

#4

FORM PTO-1390 (REV 10-2000) U.S. DEPARTMENT OF COMMERCE PATENT AND TRADEMARK OFFICE

TRANSMITTAL LETTER TO THE UNITED STATES DESIGNATED/ELECTED OFFICE (DO/EO/US) CONCERNING A FILING UNDER 35 U.S.C. 371

ATTORNEY'S DOCKET NUMBER: 20046H-000600US

U.S. APPLICATION NO. (If known, see 37 CFR 1.5): 09/600,390

INTERNATIONAL APPLICATION NO.	INTERNATIONAL FILING DATE	PRIORITY DATE CLAIMED
PCT/EP99/00300	January 15, 1999	January 15, 1998

TITLE OF INVENTION: METHOD AND APPARATUS FOR DETECTION OF DROWSINESS

APPLICANT(S) FOR DO/EO/US: PATRICK PIRIM, THOMAS BINFORD

Applicant herewith submits to the United States Designated/Elected Office (DO/EO/US) the following items and other information:

1. ☐ This is a **FIRST** submission of items concerning a filing under 35 U.S.C. 371.
2. ☒ This is a **SECOND** or **SUBSEQUENT** submission of items concerning a filing under 35 U.S.C. 371.
3. ☐ This is an express request to promptly begin national examination procedures (35 U.S.C. 371(f)).
4. ☐ The US has been elected by the expiration of 19 months from the priority date (PCT Article 31).
5. ☐ A copy of the International Application as filed (35 U.S.C. 371(c)(2))
   a. ☐ is attached hereto (required only if not communicated by the International Bureau).
   b. ☐ has been communicated by the International Bureau.
   c. ☐ is not required, as the application was filed in the United States Receiving Office (RO/US).
6. ☐ An English language translation of the International Application as filed (35 U.S.C. 371(c)(2)).
7. ☐ Amendments to the claims of the International Application under PCT Article 19 (35 U.S.C. 371(c)(3))
   a. ☐ are attached hereto (required only if not communicated by the International Bureau).
   b. ☐ have been communicated by the International Bureau.
   c. ☐ have not been made; however, the time limit for making such amendments has NOT expired.
   d. ☐ have not been made and will not be made.
8. ☐ An English language translation of the amendments to the claims under PCT Article 19 (35 U.S.C. 371(c)(3)).
9. ☒ An oath or declaration of the inventor(s) (35 U.S.C. 371(c)(4)). (2 counterparts)
10. ☐ An English language translation of the annexes to the International Preliminary Examination Report under PCT Article 36 (35 U.S.C. 371(c)(5)).

Items 11 to 16 below concern document(s) or information included:

11. ☐ An Information Disclosure Statement under 37 CFR 1.97 and 1.98.
12. ☐ An assignment document for recording. A separate cover sheet in compliance with 37 CFR 3.28 and 3.31 is included.
13. ☐ A FIRST preliminary amendment.
    ☐ A SECOND or SUBSEQUENT preliminary amendment.
14. ☐ A substitute specification.
15. ☐ A change of power of attorney and/or address letter.
16. ☒ Other items or information:

Copy of Notification of Missing Requirements

02/13/2001 LHANDGRA 00000058 09600390

02 FC:154 130.00 CH

SAMSUNG EXHIBIT 1004
Page 233 of 404

U.S. APPLICATION NO. (if known, see 37 CFR 1.5)	INTERNATIONAL APPLICATION NO.	ATTORNEY'S DOCKET NUMBER
09/600,390	PCT/EP99/00300	20046H-000600US

17. [X] The following fees are submitted:

BASIC NATIONAL FEE (37 CFR 1.492 (a) (1) - (5)) :

	CALCULATIONS PTO USE ONLY
Neither international preliminary examination fee (37 CFR 1.482) nor international search fee (37 CFR 1.445(a)(2)) paid to USPTO and International Search Report not prepared by the EPO or JPO **$1000.00**	
International preliminary examination fee (37 CFR 1.482) not paid to USPTO but International Search Report prepared by the EPO or JPO **$860.00**	
International preliminary examination fee (37 CFR 1.482) not paid to USPTO but international search fee (37 CFR 1.445(a)(2)) paid to USPTO **$710.00**	
International preliminary examination fee paid to USPTO (37 CFR 1.482) but all claims did not satisfy provisions of PCT Article 33(1)-(4) **$690.00**	
International preliminary examination fee paid to USPTO (37 CFR 1.482) and all claims satisfied provisions of PCT Article 33(1)-(4) **$100.00**	
ENTER APPROPRIATE BASIC FEE AMOUNT =	$
Surcharge of **$130.00** for furnishing the oath or declaration later than [ ] 20 [XX] 30 months from the earliest claimed priority date (37 CFR 1.492(e)).	$ 130

CLAIMS	NUMBER FILED	NUMBER EXTRA	RATE	
Total claims	- 20 =		X $18.00	$
Independent claims	- 3 =		X $80.00	$
MULTIPLE DEPENDENT CLAIM(S) (if applicable)			+ $270.00	$

TOTAL OF ABOVE CALCULATIONS =	$
[ ] Applicant claims small entity status. See 37 CFR 1.27. The fees indicated above are reduced by 1/2.	$
SUBTOTAL =	$
Processing fee of **$130.00** for furnishing the English translation later than [ ]20 [ ]30 months from the earliest claimed priority date (37 CFR 1.492(f)). +	$
TOTAL NATIONAL FEE =	$ 130
Fee for recording the enclosed assignment (37 CFR 1.21(h)). The assignment must be accompanied by an appropriate cover sheet (37 CFR 3.28, 3.31). **$40.00** per property +	$
TOTAL FEES ENCLOSED =	$ 130
Amount to be refunded:	$
charged:	$

a. [ ] A check in the amount of $_____ to cover the above fees is enclosed.

b. [X] Please charge my Deposit Account No. 20-1430 in the amount of $ 130 to cover the above fees. A duplicate copy of this sheet is enclosed.

c. [X] The Commissioner is hereby authorized to charge any additional fees which may be required, or credit any overpayment to Deposit Account No. 20-1430. A duplicate copy of this sheet is enclosed.

NOTE: Where an appropriate time limit under 37 CFR 1.494 or 1.495 has not been met, a petition to revive (37 CFR 1.137(a) or (b)) must be filed and granted to restore the application to pending status.

SEND ALL CORRESPONDENCE TO:
Gerald T. Grey
Townsend and Townsend and Crew LLP
Two Embarcadero Center, 8th fl.
San Francisco, CA 94111

SIGNATURE:

Babak S. Sani
NAME

37,495
REGISTRATION NUMBER

SAMSUNG EXHIBIT 1004
Page 234 of 404

Rec'd PCT/PTO 09 FEB 2001

#4

EXPRESS MAIL NO. EL624022347US

DATE OF DEPOSIT: February 9, 2001

Attorney Docket No. 20046H-000600US

Enclosures: Petition to extend time, Form PTO-1390, 2 counterpart declarations, copy of Notification of Missing Requirements

#5

UNITED STATES DEPARTMENT OF COMMERCE
Patent and Trademark Office
Address: ASSISTANT COMMISSIONER FOR PATENTS
Washington, D.C. 20231

U.S. APPLICATION NO.	FIRST NAMED APPLICANT	ATTY. DOCKET NO.
09/600390	PIRIM	P 20046H-00060

INTERNATIONAL APPLICATION NO.
PCT/EP99/00300

I.A. FILING DATE	PRIORITY DATE
15 JAN 99	15 JAN 98

BAKAK S SANI
TOWNSEND AND TOWNSEND AND CREW
TWO EMBARCADERO CENTER
8TH FLOOR
SAN FRANCISCO, CA 94111

DATE MAILED: 22 FEB 2001

NOTIFICATION OF ACCEPTANCE OF APPLICATION UNDER 35 U.S.C. 371 AND 37 CFR 1.494 OR 1.495

1. The applicant is hereby advised that the United States Patent and Trademark Office in its capacity as ☐ a Designated Office (37 CFR 1.494), ☒ an Elected Office (37 CFR 1.495), has determined that the above identified international application has met the requirements of 35 U.S.C. 371, and is **ACCEPTED** for national patentability examination in the United States Patent and Trademark Office.

2. The United States Application Number assigned to the application is shown above and the relevant dates are:

09 FEB 01 — 35 U.S.C. 102(e) DATE

09 FEB 01 — DATE OF RECEIPT OF 35 U.S.C. 371 REQUIREMENTS

A Filing Receipt (PTO-103X) will be issued for the present application in due course. **THE DATE APPEARING ON THE FILING RECEIPT AS THE "FILING DATE" IS THE DATE ON WHICH THE LAST OF THE 35 U.S.C. 371(C) REQUIREMENTS HAS BEEN RECEIVED IN THE OFFICE. THIS DATE IS SHOWN ABOVE.** *The filing date of the above identified application is the international filing date of the international application (Article 11(3) and 35 U.S.C. 363).* Once the Filing Receipt has been received, send all correspondence to the Group Art Unit designated thereon.

3. ☒ A request for immediate examination under 35 U.S.C. 371(f) was received on 14 JUL 00 and the application will be examined in turn.

4. The following items have been received:
- ☒ U.S. Basic National Fee.
- ☒ Copy of the international application in:
  - ☐ a non-English language.
  - ☒ English.
- ☐ Translation of the international application into English.
- ☒ Oath or Declaration of inventors(s) for DO/EO/US.
- ☐ Copy of Article 19 amendments. ☐ Translation of Article 19 amendments into English.
  The Article 19 amendments ☐ have ☐ have not been entered.
- ☒ The International Preliminary Examination Report in English and its Annexes, if any.
- ☐ Copy of the Annexes to the International Preliminary Examination Report (IPER).
  - ☐ Translation of Annexes to the IPER into English.
  The Annexes ☐ have ☒ have not been entered.
- ☒ Preliminary amendment(s) filed 14 JUL 00 and _____.
- ☒ Information Disclosure Statement(s) filed 14 JUL 00 and 29 SEPT 00.
- ☐ Assignment document.
- ☐ Power of Attorney and/or Change of Address.
- ☐ Substitute specification filed _____.
- ☐ Verified Statement Claiming Small Entity Status.
- ☒ Priority Document.
- ☒ Copy of the International Search Report ☒ and copies of the references cited therein.
- ☐ Other:

Applicant is reminded that any communication to the United States Patent and Trademark Office must be mailed to the address given in the heading and include the U.S. application no. shown above. (37 CFR 1.5)

Vonda M. Wallace VW.
Telephone: 703-305-3736

FORM PCT/DO/EO/903 (December 1997)

09/600390

UNITED STATES DEPARTMENT OF COMMERCE
Patent and Trademark Office
Address: ASSISTANT COMMISSIONER FOR PATENTS
Washington, D.C. 20231

U.S. APPLICATION NO.	FIRST NAMED APPLICANT	ATTY. DOCKET NO.

INTERNATIONAL APPLICATION NO.	
I.A. FILING DATE	PRIORITY DATE

DATE MAILED:

NOTIFICATION OF ACCEPTANCE OF APPLICATION UNDER 35 U.S.C. 371 AND 37 CFR 1.494 OR 1.495

1. The applicant is hereby advised that the United States Patent and Trademark Office in its capacity as ☐ a Designated Office (37 CFR 1.494), ☒ an Elected Office (37 CFR 1.495), has determined that the above identified international application has met the requirements of 35 U.S.C. 371, and is **ACCEPTED** for national patentability examination in the United States Patent and Trademark Office.

2. The United States Application Number assigned to the application is shown above and the relevant dates are:

35 U.S.C. 102(e) DATE _____

DATE OF RECEIPT OF 35 U.S.C. 371 REQUIREMENTS _____

A Filing Receipt (PTO-103X) will be issued for the present application in due course. **THE DATE APPEARING ON THE FILING RECEIPT AS THE "FILING DATE" IS THE DATE ON WHICH THE LAST OF THE 35 U.S.C. 371(C) REQUIREMENTS HAS BEEN RECEIVED IN THE OFFICE. THIS DATE IS SHOWN ABOVE.** ***The filing date of the above identified application is the international filing date of the international application (Article 11(3) and 35 U.S.C. 363).*** Once the Filing Receipt has been received, send all correspondence to the Group Art Unit designated thereon.

3. ☒ A request for immediate examination under 35 U.S.C. 371(f) was received on 14 JUL 2000 and the application will be examined in turn.

4. The following items have been received:
   - ☒ U.S. Basic National Fee.
   - ☒ Copy of the international application in:
     - ☐ a non-English language.
     - ☒ English.
   - ☐ Translation of the international application into English.
   - ☒ Oath or Declaration of inventors(s) for DO/EO/US.
   - ☐ Copy of Article 19 amendments. ☐ Translation of Article 19 amendments into English.
     The Article 19 amendments ☐ have ☐ have not been entered.
   - ☒ The International Preliminary Examination Report in English and its Annexes, if any.
   - ☐ Copy of the Annexes to the International Preliminary Examination Report (IPER).
     - ☐ Translation of Annexes to the IPER into English.
     - The Annexes ☒ have ☐ have not been entered.
   - ☒ Preliminary amendment(s) filed 14 JUL 2000 and _____.
   - ☒ Information Disclosure Statement(s) filed 14 JUL 2000 and _____.
   - ☐ Assignment document.
   - ☐ Power of Attorney and/or Change of Address.
   - ☐ Substitute specification filed _____.
   - ☐ Verified Statement Claiming Small Entity Status.
   - ☒ Priority Document.
   - ☒ Copy of the International Search Report ☒ and copies of the references cited therein.
   - ☐ Other:

Applicant is reminded that any communication to the United States Patent and Trademark Office must be mailed to the address given in the heading and include the U.S. application no. shown above. (37 CFR 1.5)

FORM PCT/DO/EO/903 (December 1997) Telephone: 703 _____

09/600390

PATENT

Attorney Docket No.: 20046H-000600US
Client Reference No.: 048J US 3724

534 Rec'd PCT/PTC 14 JUL 2000

RS

#6

1-21-02

IN THE UNITED STATES PATENT AND TRADEMARK OFFICE

In re U.S. National Phase of
PCT/EP99/00300 of:

PATRICK PIRIM, et al.

Application No.: Not yet assigned

Filed: Herewith

For: METHOD AND APPARATUS FOR DETECTION OF DROWSINESS

INFORMATION DISCLOSURE STATEMENT UNDER 37 CFR §1.97 and §1.98

San Francisco, CA 94111
July 14, 2000

Box PCT
Assistant Commissioner for Patents
Washington, D.C. 20231

Sir:

The references cited on attached form PTO-1449 are being called to the attention of the Examiner. Copies of the references are enclosed. In addition, applicants attach a copy of an International Search Report dated April 6, 1999 which was issued in conjunction with the above referenced application, and in which these references were cited.

It is respectfully requested that the cited references be expressly considered during the prosecution of this application, and the references be made of record therein and appear among the "references cited" on any patent to issue therefrom.

As provided for by 37 CFR 1.97(g) and (h), no inference should be made that the information and references cited are prior art merely because they are in this statement and

no representation is being made that a search has been conducted or that this statement encompasses all the possible relevant information.

Respectfully submitted,

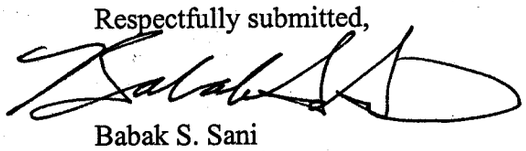

Babak S. Sani
Reg. No. 37,495

TOWNSEND and TOWNSEND and CREW LLP
Two Embarcadero Center, 8th Floor
San Francisco, California 94111-3834
Tel: 415-576-0200
Fax: 415-576-0300
BSS/tp

SF 1115537 v1

534' 'd PCT/PTO 14 JUL 2000

FORM PTO-1449 (Modified) LIST OF PATENTS AND PUBLICATIONS FOR APPLICANT'S INFORMATION DISCLOSURE STATEMENT (Use several sheets if necessary)	Attorney Docket No.: 20046H-000600US	Application No.: Not yet assigned 09/600390
	Applicant: PATRICK PIRIM, et al.	
	Filing Date: ~~Herewith~~ 2/9/01	Group: ~~Unassigned~~ 2632

Reference Designation — **U.S. PATENT DOCUMENTS** — Page 1

Examiner Initial	Document No.	Date	Name	Class	Sub-class	Filing Date (If Appropriate)
_____ AA						
_____ AB						
_____ AC						
_____ AD						
_____ AE						
_____ AF						
_____ AG						
_____ AH						
_____ AI						
_____ AJ						
_____ AK						
_____ AL						

FOREIGN PATENT DOCUMENTS

	Document No.	Date	Country	Class	Sub-class	Translation (Yes/No)
_____ AM	~~WO 98/05002~~	~~2/5/1998~~	~~PCT~~			
_____ AN	~~19715519A1~~	~~11/6/1997~~	~~Germany~~			
_____ AO	~~WO 97/01246~~	~~1/9/1997~~	~~PCT~~			
_____ AP						
_____ AQ						
_____ AR						

OTHER ART (Including Author, Title, Date, Pertinent Pages, Etc.)

_____ AS	
_____ AT	
_____ AU	
_____ AV	
_____ AW	

EXAMINER Mullen DATE CONSIDERED 10/2/02

EXAMINER: Initial if reference considered, whether or not citation is in conformance with MPEP 609; Draw line through citation if not in conformance and not considered. Include copy of this form with next communication to applicant.

TENT COOPERATION TREATY

PCT

INTERNATIONAL SEARCH REPORT

(PCT Article 18 and Rules 43 and 44)

Applicant's or agent's file reference	**FOR FURTHER ACTION** see Notification of Transmittal of International Search Report (Form PCT/ISA/220) as well as, where applicable, item 5 below.	
048J PCT 361		
International application No.	International filing date *(day/month/year)*	(Earliest) Priority Date *(day/month/year)*
PCT/EP 99/ 00300	15/01/1999	15/01/1998
Applicant		
HOLDING B.E.V. SA et al.		

This International Search Report has been prepared by this International Searching Authority and is transmitted to the applicant according to Article 18. A copy is being transmitted to the International Bureau.

This International Search Report consists of a total of 2 sheets.

[X] It is also accompanied by a copy of each prior art document cited in this report.

1. **Basis of the report**

a. With regard to the **language,** the international search was carried out on the basis of the international application in the language in which it was filed, unless otherwise indicated under this item.

[ ] the international search was carried out on the basis of a translation of the international application furnished to this Authority (Rule 23.1(b)).

b. With regard to any **nucleotide and/or amino acid sequence** disclosed in the international application, the international search was carried out on the basis of the sequence listing :

[ ] contained in the international application in written form.

[ ] filed together with the international application in computer readable form.

[ ] furnished subsequently to this Authority in written form.

[ ] furnished subsequently to this Authority in computer readble form.

[ ] the statement that the subsequently furnished written sequence listing does not go beyond the disclosure in the international application as filed has been furnished.

[ ] the statement that the information recorded in computer readable form is identical to the written sequence listing has been furnished

2. [ ] **Certain claims were found unsearchable** (See Box I).

3. [ ] **Unity of invention is lacking** (see Box II).

4. With regard to the **title,**

[X] the text is approved as submitted by the applicant.

[ ] the text has been established by this Authority to read as follows:

5. With regard to the **abstract,**

[X] the text is approved as submitted by the applicant.

[ ] the text has been established, according to Rule 38.2(b), by this Authority as it appears in Box III. The applicant may, within one month from the date of mailing of this international search report, submit comments to this Authority.

6. The figure of the **drawings** to be published with the abstract is Figure No. _____

[ ] as suggested by the applicant.

[ ] because the applicant failed to suggest a figure.

[ ] because this figure better characterizes the invention.

[X] None of the figures.

SAMSUNG EXHIBIT 1004
Page 241 of 404

INTERNATIONAL SEARCH REPORT

International Application No
PCT/EP 99/00300

A. CLASSIFICATION OF SUBJECT MATTER
IPC 6 G08B21/00

According to International Patent Classification (IPC) or to both national classification and IPC

B. FIELDS SEARCHED

Minimum documentation searched (classification system followed by classification symbols)
IPC 6 G08B G06T

Documentation searched other than minimum documentation to the extent that such documents are included in the fields searched

Electronic data base consulted during the international search (name of data base and, where practical, search terms used)

C. DOCUMENTS CONSIDERED TO BE RELEVANT

Category °	Citation of document, with indication, where appropriate, of the relevant passages	Relevant to claim No.
X,P	WO 98 05002 A (CARLUS MAGNUS LIMITED ;PIRIM PATRICK (FR)) 5 February 1998 cited in the application see claims 1-14	1-45
A	DE 197 15 519 A (MITSUBISHI MOTORS CORP) 6 November 1997 see the whole document	1-45
A	WO 97 01246 A (STEED VAN P ;CEJKA ROBERT K (US)) 9 January 1997 see abstract	1-45

☐ Further documents are listed in the continuation of box C.

☒ Patent family members are listed in annex.

° Special categories of cited documents :

"A" document defining the general state of the art which is not considered to be of particular relevance

"E" earlier document but published on or after the international filing date

"L" document which may throw doubts on priority claim(s) or which is cited to establish the publication date of another citation or other special reason (as specified)

"O" document referring to an oral disclosure, use, exhibition or other means

"P" document published prior to the international filing date but later than the priority date claimed

"T" later document published after the international filing date or priority date and not in conflict with the application but cited to understand the principle or theory underlying the invention

"X" document of particular relevance; the claimed invention cannot be considered novel or cannot be considered to involve an inventive step when the document is taken alone

"Y" document of particular relevance; the claimed invention cannot be considered to involve an inventive step when the document is combined with one or more other such documents, such combination being obvious to a person skilled in the art.

"&" document member of the same patent family

Date of the actual completion of the international search	Date of mailing of the international search report
28 May 1999	04/06/1999

Name and mailing address of the ISA	Authorized officer
European Patent Office, P.B. 5818 Patentlaan 2 NL - 2280 HV Rijswijk Tel. (+31-70) 340-2040, Tx. 31 651 epo nl, Fax: (+31-70) 340-3016	Sgura, S

Form PCT/ISA/210 (second sheet) (July 1992)

SAMSUNG EXHIBIT 1004
Page 242 of 404

INTERNATIONAL SEARCH REPORT

Information on patent family members

International Application No
PCT/EP 99/00300

Patent document cited in search report	Publication date	Patent family member(s)	Publication date
WO 9805002 A	05-02-1998	FR 2751772 A	30-01-1998
		AU 3775397 A	20-02-1998
		EP 0912964 A	06-05-1999
DE 19715519 A	06-11-1997	JP 9277849 A	28-10-1997
		FR 2747346 A	17-10-1997
		US 5786765 A	28-07-1998
WO 9701246 A	09-01-1997	AU 6480896 A	22-01-1997

SAMSUNG EXHIBIT 1004
Page 243 of 404

PCT/EP 99/00300

Europäisches Patentamt

European Patent Office

Office européen des brevets

#7

REC'D 15 APR 1999
WIPO PCT

PRIORITY DOCUMENT

SUBMITTED OR TRANSMITTED IN COMPLIANCE WITH RULE 17.1(a) OR (b)

09/600390

Bescheinigung

Die angehefteten Unterlagen stimmen mit der ursprünglich eingereichten Fassung der auf dem nächsten Blatt bezeichneten internationalen Patentanmeldung überein.

Certificate

The attached documents are exact copies of the international patent application described on the following page, as originally filed.

Attestation

Les documents fixés à cette attestation sont conformes à la version initialement déposée de la demande de brevet international spécifiée à la page suivante.

Den Haag, den
The Hague,
La Haye, le 09.04.99

Der Präsident des Europäischen Patentamts
Im Auftrag
For the President of the European Patent Office
Le Président de l'Office européen des brevets
p.o.

R.L.R. Pether

Patentanmeldung Nr.
Patent application no.
Demande de brevet n° PCT/EP 98/05383

EPA/EPO/OEB Form 1014 (R) 09.82

Blatt 2 der Bescheinigung
Sheet 2 of the certificate
Page 2 de l'attestation

Anmeldung Nr.:
Application no.:
Demande n°: PCT/EP 98/05383

Anmelder:
Applicant(s):
Demandeur(s): 1. HOLDING BEV S.A. - Luxemburg, Luxemburg
2. PIRIM, Patrick - Paris, France

Bezeichnung der Erfindung:
Title of the invention:
Titre de l'invention: Image processing apparatus and method

Anmeldetag:
Date of filing:
Date de dépôt: 25 August 1998 (25.08.98)

In Anspruch genommene Priorität(en)
Priority(ies) claimed
Priorité(s) revendiquée(s)

Staat: State: Pays:	Tag: Date: Date:	Aktenzeichen: File no. Numéro de dépôt:

Benennung von Vertragsstaaten : Siehe Formblatt PCT/RO/101 (beigefügt)
Designation of contracting states : See Form PCT/RO/101 (enclosed)
Désignation d'états contractants : Voir Formulaire PCT/RO/101 (ci-joint)

Bemerkungen:
Remarks:
Remarques:

SAMSUNG EXHIBIT 1004
Page 245 of 404

PCT/EP98/05383

Box No.V DESIGNATION OF STATES

The following designations are hereby made under Rule 4.9(a) *(mark the applicable check-boxes; at least one must be selected)*:

Regional Patent

- [X] AP ARIPO Patent: GH Ghana, GM Gambia, KE Kenya, LS Lesotho, MW Malawi, SD Sudan, SZ Swaziland, UG Uganda, ZW Zimbabwe, and any other State which is a Contracting State of the Harare Protocol and of the PCT
- [X] EA Eurasian Patent: AM Armenia, AZ Azerbaijan, BY Belarus, KG Kyrgyzstan, KZ Kazakhstan, MD Republic of Moldova, RU Russian Federation, TJ Tajikistan, TM Turkmenistan, and any other State which is a Contracting State of the Eurasian Patent Convention and of the PCT
- [X] EP European Patent: AT Austria, BE Belgium, CH and LI Switzerland and Liechtenstein, CY Cyprus, DE Germany, DK Denmark, ES Spain, FI Finland, FR France, GB United Kingdom, GR Greece, IE Ireland, IT Italy, LU Luxembourg, MC Monaco, NL Netherlands, PT Portugal, SE Sweden, and any other State which is a Contracting State of the European Patent Convention and of the PCT
- [X] OA OAPI Patent: BF Burkina Faso, BJ Benin, CF Central African Republic, CG Congo, CI Côte d'Ivoire, CM Cameroon, GA Gabon, GN Guinea, ML Mali, MR Mauritania, NE Niger, SN Senegal, TD Chad, TG Togo, and any other State which is a member State of OAPI and a Contracting State of the PCT *(if other kind of protection or treatment desired, specify on dotted line)*:

National Patent *(if other kind of protection or treatment desired, specify on dotted line)*:

- [X] AL Albania
- [X] AM Armenia
- [X] AT Austria
- [X] AU Australia
- [X] AZ Azerbaijan
- [X] BA Bosnia and Herzegovina
- [X] BB Barbados
- [X] BG Bulgaria
- [X] BR Brazil
- [X] BY Belarus
- [X] CA Canada
- [X] CH and LI Switzerland and Liechtenstein
- [X] CN China
- [X] CU Cuba
- [X] CZ Czech Republic
- [X] DE Germany
- [X] DK Denmark
- [X] EE Estonia
- [X] ES Spain
- [X] FI Finland
- [X] GB United Kingdom
- [X] GE Georgia
- [X] GH Ghana
- [X] GM Gambia
- [X] GW Guinea-Bissau
- [X] HR Croatia
- [X] HU Hungary
- [X] ID Indonesia
- [X] IL Israel
- [X] IS Iceland
- [X] JP Japan
- [X] KE Kenya
- [X] KG Kyrgyzstan
- [X] KP Democratic People's Republic of Korea
- [X] KR Republic of Korea
- [X] KZ Kazakhstan
- [X] LC Saint Lucia
- [X] LK Sri Lanka
- [X] LR Liberia
- [X] LS Lesotho
- [X] LT Lithuania
- [X] LU Luxembourg
- [X] LV Latvia
- [X] MD Republic of Moldova
- [X] MG Madagascar
- [X] MK The former Yugoslav Republic of Macedonia
- [X] MN Mongolia
- [X] MW Malawi
- [X] MX Mexico
- [X] NO Norway
- [X] NZ New Zealand
- [X] PL Poland
- [X] PT Portugal
- [X] RO Romania
- [X] RU Russian Federation
- [X] SD Sudan
- [X] SE Sweden
- [X] SG Singapore
- [X] SI Slovenia
- [X] SK Slovakia
- [X] SL Sierra Leone
- [X] TJ Tajikistan
- [X] TM Turkmenistan
- [X] TR Turkey
- [X] TT Trinidad and Tobago
- [X] UA Ukraine
- [X] UG Uganda
- [X] US United States of America (CIP of PCT/FR 97/01354 filed on 22/07/97)
- [X] UZ Uzbekistan
- [X] VN Viet Nam
- [X] YU Yugoslavia
- [X] ZW Zimbabwe

Check-boxes reserved for designating States (for the purposes of a national patent) which have become party to the PCT after issuance of this sheet:

- [ ] .....
- [ ] .....

Precautionary Designation Statement: In addition to the designations made above, the applicant also makes under Rule 4.9(b) all other designations which would be permitted under the PCT except any designation(s) indicated in the Supplemental Box as being excluded from the scope of this statement. The applicant declares that those additional designations are subject to confirmation and that any designation which is not confirmed before the expiration of 15 months from the priority date is to be regarded as withdrawn by the applicant at the expiration of that time limit. *(Confirmation of a designation consists of the filing of a notice specifying that designation and the payment of the designation and confirmation fees. Confirmation must reach the receiving Office within the 15-month time limit.)*

SAMSUNG EXHIBIT 1004
Page 246 of 404

IMAGE PROCESSING APPARATUS AND METHOD

Inventor: Patrick Pirim

BACKGROUND OF THE INVENTION

1. Field of the Invention

The present invention relates generally to an image processing apparatus, and more particularly to a method and apparatus for identifying and localizing an area in relative movement in a scene and determining the speed and oriented direction of the area in real time.

2. Description of the Related Art

The human or animal eye is the best known system for identifying and localizing an object in relative movement, and for determining its speed and direction of movement. Various efforts have been made to mimic the function of the eye. One type of device for this purpose is referred to as an artificial retina, which is shown, for example, in Giocomo Indiveri et. al, Proceedings of MicroNeuro, 1996, pp. 15-22 (analog artificial retina), and Pierre-François Rüedii, Proceedings of MicroNeuro, 1996, pp. 23-29, (digital artificial retina which identifies the edges of an object). However, very fast and high capacity memories are required for these devices to operate in real time, and only limited information is obtained about the moving areas or objects observed. Other examples of artificial retinas and similar devices are shown in U S. Patent Nos. 5,694,495 and 5,712,729.

Another proposed method for detecting objects in an image is to store a frame from a video camera or other observation sensor in a first two-dimensional memory. The frame is composed of a sequence of pixels representative of the scene observed by the camera at time t_0. The video signal for the next frame, which represents the scene at time t_1, is stored in a second two-dimensional memory. If an object has moved between times t_0 and t_1, the distance d by which the object, as represented by its pixels, has moved in the scene between t_1 and t_0 is determined. The displacement speed is then equal to d/T, where

$T = t_1 - t_0$. This type of system requires a very large memory capacity if it is used to obtain precise speed and oriented direction. Information for the movement of the object. There is also a delay in obtaining the speed and displacement direction information corresponding to $t_1 + R$, where R is the time necessary for the calculations for the period $t_0 - t_1$ system. These two disadvantages limit applications of this type of system.

Another type of prior image processing system is shown in French Patent No. 2,611,063, of which the inventor hereof is also an inventor. This patent relates to a method and apparatus for real time processing of a sequenced data flow from the output of a camera in order to perform data compression. A histogram of signal levels from the camera is formed using a first sequence classification law. A representative Gaussian function associated with the histogram is stored, and the maximum and minimum levels are extracted. The signal levels of the next sequence are compared with the signal levels for the first sequence using a fixed time constant identical for each pixel. A binary classification signal is generated that characterizes the next sequence with reference to the classification law An auxiliary signal is generated from the binary signal that is representative of the duration and position of a range of significant values. Finally, the auxiliary signal is used to generate a signal localizing the range with the longest duration, called the dominant range. These operations are repeated for subsequent sequences of the sequenced signal.

This prior process enables data compression, keeping only interesting parameters in the processed flow of sequenced data. In particular, the process is capable of processing a digital video signal in order to extract and localize at least one characteristic of at least one area in the image. It is thus possible to classify, for example, brightness and/or chrominance levels of the signal and to characterize and localize an object in the image.

U.S. Patent No. 5,488,430 detects and estimates a displacement by separately determining horizontal and vertical changes of the observed area. Difference signals are used to detect movements from right to left or from left to right, or from top to bottom or bottom to top, in the horizontal and vertical directions respectively. This is accomplished by carrying out an EXCLUSIVE OR function on horizontal/vertical difference signals and on frame difference signals, and by using a ratio of the sums of the horizontal/vertical signals and the sums of frame difference signals with respect to a K x 3 window. Calculated values of the image along orthogonal horizontal and vertical directions are

used with an identical repetitive difference K in the orthogonal directions, this difference K being defined as a function of the displacement speeds that are to be determined. The device determines the direction of movement along each of the two orthogonal directions by applying a set of calculation operations to the difference signals, which requires very complex computations. Additional complex computations are also necessary to obtain the speed and oriented direction of displacement (extraction of a square root to obtain the amplitude of the speed, and calculation of the arctan function to obtain the oriented direction), starting from projections on the horizontal and vertical axes. This device also does not smooth the pixel values using a time constant, especially a time constant that is variable for each pixel, in order to compensate for excessively fast variations in the pixel values.

Finally, Alberto Tomita Sales Representative. and Rokuva Ishii, "Hand Shape Extraction from a Sequence of Digitized Gray-Scale Images," Institute of Electrical and Electronics Engineers, Vol. 3, 1994, pp. 1925-1930, detects movement by subtracting between successive images, and forming histograms based upon the shape of a human hand in order to extract the shape of a human hand in a digitized scene. The histogram analysis is based upon a gray scale inherent to the human hand. It does not include any means of forming histograms in the plane coordinates . The sole purpose of the method is to detect the displacement of a human hand, for example, in order to replace the normal computer mouse by a hand, the movements of which are identified to control a computer.

It would be desirable to have an image processing system which has a relatively simple structure and requires a relatively small memory capacity, and by which information on the movement of objects within an image can be obtained in real-time. It would also be desirable to have a method and apparatus for detecting movements that are not limited to the hand, but to any object (in the widest sense of the term) in a scene, and which does not use histograms based on the gray values of a hand, but rather the histograms of different variables representative of the displacement and histograms of plane coordinates. Such a system would be applicable to many types of applications requiring the detection of moving and non-moving objects.

SUMMARY OF THE INVENTION

The present invention is a process for identifying relative movement of an object in an input signal, the input signal having a succession of frames, each frame having a succession of pixels. For each pixel of the input signal, the input signal is smoothed using a time constant for the pixel in order to generate a smoothed input signal. For each pixel in the smoothed input signal, a binary value corresponding to the existence of a significant variation in the amplitude of the pixel between the current frame and the immediately previous smoothed input frame, and the amplitude of the variation, are determined.

Using the existence of a significant variation for a given pixel, the time constant for the pixel, which is to be used in smoothing subsequent frames of the input signal, is modified. The time constant is preferably in the form 2^p, and is increased or decreased by incrementing or decrementing p. For each particular pixel of the input signal, two matrices are then formed: a first matrix comprising the binary values of a subset of the pixels of the frame spatially related to the particular pixel; and a second matrix comprising the amplitude of the variation of the subset of the pixels of the frame spatially related to the particular pixel. In the first matrix, it is determined whether the particular pixel and the pixels along an oriented direction relative to the particular pixel have binary values of a particular value representing significant variation, and, for such pixels, it is determined in the second matrix whether the amplitude of the pixels along the oriented direction relative to the particular pixel varies in a known manner indicating movement in the oriented direction of the particular pixel and the pixels along the oriented direction relative to the particular pixel. The amplitude of the variation of the pixels along the oriented direction determines the velocity of movement of the particular pixel and the pixels along the oriented direction relative to the particular pixel.

In each of one or more domains, a histogram of the values distributed in the first and second matrices falling in each such domain is formed. For a particular domain, an area of significant variation is determined from the histogram for that domain. Histograms of the area of significant variation along coordinate axes are then formed. From these histograms, it is determined whether there is an area in movement for the particular domain. The domains are preferably selected from the group consisting of i)

luminance, ii) speed (V), iii) oriented direction (D1), iv) time constant (CO), v) hue, vi) saturation, and vii) first axis (x(m)), and viii) second axis (y(m)).

In one embodiment, the first and second matrices are square matrices, with the same odd number of rows and columns, centered on the particular pixel. In this embodiment, the steps of determining in the first matrix whether the particular pixel and the pixels along an oriented direction relative to the particular pixel have binary values of a particular value representing significant variation, and the step of determining in the second matrix whether the amplitude signal varies in a predetermined criteria along an oriented direction relative to the particular pixel, comprise applying nested n x n matrices, where n is odd, centered on the particular pixel to the pixels within each of the first and second matrices. The process then includes the further step of determining the smallest nested matrix in which the amplitude signal varies along an oriented direction around the particular pixel.

In an alternative embodiment, the first and second matrices are hexagonal matrices centered on the particular pixel. In this embodiment, the steps of determining in the first matrix whether the particular pixel and the pixels along an oriented direction relative to the particular pixel have binary values of a particular value representing significant variation, and the step of determining in the second matrix whether the amplitude signal varies in a predetermined criteria along an oriented direction relative to the particular pixel, comprise applying nested hexagonal matrices of varying size centered on the particular pixel to the pixels within each of the first and second matrices. The process then further includes determining the smallest nested matrix in which the amplitude signal varies along an oriented direction around the particular pixel.

In a still further embodiment of the invention, the first and second matrices are inverted L-shaped matrices with a single row and a single column. In this embodiment, the steps of determining in the first matrix whether the particular pixel and the pixels along an oriented direction relative to the particular pixel have binary values of a particular value representing significant variation, and the step of determining in the second matrix whether the amplitude signal varies in a predetermined criteria along an oriented direction relative to the particular pixel, comprise applying nested n x n matrices, where n is odd, to the single line and the single column to determine the smallest matrix in which the amplitude varies on a line with the steepest slope and constant quantification.

If desired, successive decreasing portions of frames of the input signal may be considered using a Mallat time-scale algorithm, and the largest of these portions, which provides displacement, speed and orientation indications compatible with the value of p, is selected.

In a process of smoothing an input signal, for each pixel of the input signal, i) the pixel is smoothed using a time constant (CO) for that pixel, thereby generating a smoothed pixel value (LO), ii) it is determined whether there exists a significant variation between such pixel and the same pixel in a previous frame, and iii) the time constant (CO) for such pixel to be used in smoothing the pixel in subsequent frames of the input signal is modified based upon the existence or non-existence of a significant variation.

The step of determining the existence of a significant variation for a given pixel preferably comprises determining whether the absolute value of the difference (AB) between the given pixel value (PI) and the value of such pixel in a smoothed prior frame (LI) exceeds a threshold (SE). The step of smoothing the input signal preferably comprises, for each pixel, i) modifying the time constant (CO) for pixel such based upon the existence of a significant variation as determined in the prior step, and ii) determining a smoothed value for the pixel (LO) as follows:

$$LO = LI + \frac{PI - LI}{CO}$$

Time constant (CO) is preferably in the form 2^p, and p is incremented in the event that AB<SE and decremented in the event AB>SE.

In this process, the system generates an output signal comprising, for each pixel, a binary value (DP) indicating the existence or non-existence of a significant variation, and the value of the time constant (CO). The binary values (DP) and the time constants (CO) are preferably stored in a memory sized to correspond to the frame size.

A process for identifying an area in relative movement in an input signal includes the steps of:

generating a first array indicative of the existence of significant variation in the magnitude of each pixel between a current frame and a prior frame;

generating a second array indicative of the magnitude of significant variation of each pixel between the current frame and a prior frame;

establishing a first moving matrix centered on a pixel under consideration and comprising pixels spatially related to the pixel under consideration, the first moving matrix traversing the first array for consideration of each pixel of the current frame; and

determining whether the pixel under consideration and each pixel of the pixels spatially related to the pixel under consideration along an oriented direction relative thereto within the first matrix are a particular value representing the presence of significant variation, and if so, establishing in a second matrix within the first matrix, centered on the pixel under consideration, and determining whether the amplitude of the pixels in the second matrix spatially related to the pixel under consideration along an oriented direction relative thereto are indicative of movement along such oriented direction, the amplitude of the variation along the oriented direction being indicative of the velocity of movement, the size of the second matrix being varied to identify the matrix size most indicative of movement.

The process further comprises, in at least one domain selected from the group consisting of i) luminance, ii) speed (V), iii) oriented direction (D1), iv) time constant (CO), v) hue, vi) saturation, and vii) first axis (x(m)), and viii) second axis (y(m)), and ix) data characterized by external inputs, forming a first histogram of the values in such domain for pixels indicative of movement along an oriented direction relative to the pixel under consideration. If desired, for the pixels in the first histogram, histograms of the position of such pixels along coordinate axes may be formed, and from such histograms, an area of the image meeting criteria of the at least one domain may be determined.

A process for identifying pixels in an input signal in one of a plurality of classes in one of a plurality of domains comprises, on a frame-by-frame basis:

for each pixel of the input signal, analyzing the pixel and providing an output signal for each domain containing information to identify each domain in which the pixel is classified ;

providing a classifier for each domain, the classifier enabling classification of pixels within each domain to selected classes within the domain;

providing a validation signal for the domains, the validation signal selecting one or more of the plurality of domains for processing; and

forming a histogram for pixels of the output signal within the classes selected by the classifier within each domain selected by the validation signal.

The process further includes the steps of forming histograms along coordinate axes for the pixels within the classes selected by the classifier within each domain selected by the validation signal, and forming a composite signal corresponding to the spatial position of such pixels within the frame. Pixels falling within limits l_a, l_b, l_c, l_d in the histograms along the coordinate axes are then identified, and a composite signal from the pixels falling within these limits is formed.

A process for identifying the velocity of movement of an area of an input signal comprises:

for each particular pixel of the input signal, forming a first matrix comprising binary values indicating the existence or non-existence of a significant variation in the amplitude of the pixel signal between the current frame and a prior frame for a subset of the pixels of the frame spatially related to such particular pixel, and a second matrix comprising the amplitude of such variation;

determining in the first matrix whether the particular pixel and the pixels along an oriented direction relative to the particular pixel have binary values of a particular value representing significant variation, and, for such pixels, determining in the second matrix whether the amplitudes of the pixels along an oriented direction relative to the particular pixel vary in a known manner indicating movement of the pixel and the pixels along an oriented direction relative to the particular pixel, the amplitude of the variation along the oriented direction determining the velocity of movement of the particular pixel.

A process for identifying a non-moving area in an input signal comprises:

forming histograms along coordinate axes for pixels of the input signal without significant variation between the current frame and a prior frame; and

forming a composite signal corresponding to the spatial position of such pixels within the frame.

An apparatus for identifying relative movement in an input signal comprises:

means for smoothing the input signal using a time constant for each pixel, thereby generating a smoothed input signal;

means for determining for each pixel in the smoothed input signal a binary value corresponding to the existence of a significant variation in the amplitude of the pixel signal between the current frame and the immediately previous smoothed input frame, and for determining the amplitude of the variation;

means for using the existence of a significant variation for a given pixel to modify the time constant for the pixel to be used in smoothing subsequent frames of the input signal;

means for forming a first matrix comprising the binary values of a subset of the pixels of the frame spatially related to each particular pixel, and for forming a second matrix comprising the amplitude of the variation of the subset of the pixels of the frame spatially related to such particular pixel;

means for determining in the first matrix a particular area in which the binary value for each pixel is a particular value representing significant variation, and, for such particular area, for determining in the second matrix whether the amplitude varies along an oriented direction relative to the particular pixel in a known manner indicating movement of the pixel in the oriented direction, the amplitude of the variation along the oriented direction determining the velocity of movement of the pixel.

An apparatus for smoothing an input signal comprises:

means for smoothing each pixel of the input signal using a time constant (CO) for such pixel, thereby generating a smoothed pixel value (LO);

means for determining the existence of a significant variation for a given pixel, and modifying the time constant (CO) for the pixel to be used in smoothing the pixel in subsequent frames of the input signal based upon the existence of such significant variation.

An apparatus for identifying an area in relative movement in an input signal comprises:

means for generating a first array indicative of the existence of significant variation in the magnitude of each pixel between a current frame and a prior frame;

means for generating a second array indicative of the magnitude of significant variation of each pixel between the current frame and a prior frame;

means for establishing a first moving matrix centered on a pixel under consideration and comprising pixels spatially related to the pixel under consideration, the first moving matrix traversing the first array for consideration of each pixel of the current frame;

means for determining whether the pixel under consideration and each pixel along an oriented direction relative to the pixel under consideration within the first matrix is a particular value representing the presence of significant variation, and if so, for

establishing a second matrix within the first matrix, centered on the pixel under consideration, and for determining whether the amplitude of the pixels in the second matrix are indicative of movement along an oriented direction relative to the pixel under consideration, the amplitude of the variation along the oriented direction being indicative of the velocity of movement, the size of the second matrix being varied to identify the matrix size most indicative of movement.

An apparatus for identifying pixels in an input signal in one of a plurality of classes in one of a plurality of domains comprises:

means for analyzing each pixel of the input signal and for providing an output signal for each domain containing information to identify each domain in which the pixel is classified;

a classifier for each domain, the classifier classifying pixels within each domain in selected classes within the domain;

a linear combination unit for each domain, the linear combination unit generating a validation signal for the domain, the validation signal selecting one or more of the plurality of domains for processing; and

means for forming a histogram for pixels of the output signal within the classes selected by the classifier within each domain selected by the validation signal.

An apparatus for identifying the velocity of movement of an area of an input signal comprises:

means for determining for each pixel in the input signal a binary value corresponding to the existence of a significant variation in the amplitude of the pixel signal between the current frame and the immediately previous smoothed input frame, and for determining the amplitude of the variation,

~~means for forming, for each particular pixel of the input signal, a first matrix~~ comprising the binary values of a subset of the pixels spatially related to such particular pixel, and a second matrix comprising the amplitude of the variation of the subset of the pixels spatially related to such particular pixel; and

means for determining in the first matrix whether for a particular pixel, and other pixels along an oriented direction relative to the particular pixel, the binary value for each pixel is a particular value representing significant variation, and, for such particular pixel and other pixels, determining in the second matrix whether the amplitude varies along an oriented direction relative to the particular pixel in a known manner indicating

movement of the pixel and the other pixels, the amplitude of the variation along the oriented direction determining the velocity of movement of the pixel and the other pixels.

An apparatus for identifying a non-moving area in an input signal comprises:

means for forming histograms along coordinate axes for pixels of a current frame without a significant variation from such pixels in a prior frame; and

means for forming a composite signal corresponding to the spatial position of such pixels within the frame.

BRIEF DESCRIPTION OF THE DRAWINGS

Fig. 1 is a diagrammatic illustration of the system according to the invention.

Fig. 2 is a block diagram of the temporal and spatial processing units of the invention.

Fig. 3 is a block diagram of the temporal processing unit of the invention.

Fig. 4 is a block diagram of the spatial processing unit of the invention.

Fig. 5 is a diagram showing the processing of pixels in accordance with the invention.

Fig. 6 illustrates the numerical values of the Freeman code used to determine movement direction in accordance with the invention.

Fig. 7 illustrates two nested matrices as processed by the temporal processing unit.

Fig.8 illustrates hexagonal matrices as processed by the temporal processing unit.

Fig.9 illustrates reverse-L matrices as processed by the temporal processing unit.

Fig.9a illustrates angular sector shaped matrices as processed by the temporal processing unit.

Fig. 10 is a block diagram showing the relationship between the temporal and spatial processing units, and the histogram formation units.

Fig. 11 is a block diagram showing the interrelationship between the various histogram formation units.

Fig. 12 shows the formation of a two-dimensional histogram of a moving area from two one-dimensional histograms.

Fig. 13 is a block diagram of an individual histogram formation unit.

Fig.14 illustrates the use of the classifier for finding an alignment of points relative to the direction of an analysis axis.

Fig.14a illustrates a one-dimensional histogram.

Fig. 15 illustrates the use of the system of the invention for video-conferencing.

Fig.16 is a top view of the system of the invention for video-conferencing.

Fig.17 is a diagram illustrating histograms formed on the shape of the head of a participant in a video conference.

Fig. 18 illustrates the system of the invention eliminating unnecessary information in a video-conferencing application.

Fig. 19 is a block diagram showing use of the system of the invention for target tracking.

Fig. 20 is an illustration of the system of the invention selecting a target for tracking.

Figs. 21-23 illustrate the system of the invention locking on to a selected target.

Fig. 24 illustrates the processing of the system using a Mallat diagram

DETAILED DESCRIPTION OF THE INVENTION

The present invention is a method and apparatus for detection of relative movement or non-movement of an area within an image. Relative movement, as used herein, means movement of an area, which may be an "object" in the broadest sense of the term, e.g., a person, a portion of a person, or any animals or inanimate object, in an approximately motionless environment, or approximate immobility of an area in an environment that is at least partially in movement.

Referring to Fig. 1, image processing system 11 includes an input 12 that receives a digital video signal S originating from a video camera or other imaging device 13 which monitors a scene 13a. Imaging device 13 is preferably a conventional CMOS type CCD camera. It is, however, foreseen that the system of the invention may be used with any appropriate sensor e. g. , ultrasound, IR, Radar, tactile array, etc. , that generates

an output in the form of an array of information corresponding to information observed by the imaging device. Imaging device 13 may have a direct digital output, or an analog output that is converted by an A/D convertor into digital signal S.

While signal S may be a progressive signal, in a preferred embodiment, in which imaging device 13 is a conventional video camera, signal S is composed of a succession of pairs of interlaced frames, TR_1 and TR'_1, and TR_2 and TR'_2, each consisting of a succession of horizontal scanned lines, e.g., $l_{1,1}$, $l_{1,2}$,...,$l_{1,17}$ in TR_1, and $l_{2,1}$ in TR_2 Each line consists of a succession of pixels or image-points Pl, e.g., $a_{1,1}$, $a_{1,2}$ and $a_{1,3}$ for line $l_{1,1}$; $al_{17,1}$ and $al_{7,22}$ for line $l_{1,17}$; $al_{1,1}$ and $a_{1,2}$ for line $l_{2,1}$. Signal S(Pl) represents signal S composed of pixels Pl.

As known in the art, S(Pl) includes a frame synchronization signal (ST) at the beginning of each frame, a line synchronization signal (SL) at the beginning of each line, and a blanking signal (BL). Thus, S(Pl) includes a succession frames, which are representative of the time domain, and within each frame, a series of lines and pixels, which are representative of the spatial domain.

In the time domain, "successive frames" shall refer to successive frames of the same type (i. e. , odd frames such as TR_1, or even frames such as TR'_1), and "successive pixels in the same position" shall denote successive values of the pixels (Pl) in the same location in successive frames of the same type, e.g., $a_{1,1}$ of $l_{1,1}$ in frame TR_1 and $a_{1,1}$ of $l_{1,1}$ in the next corresponding frame TR_2.

Image processing system 11 generates outputs ZH and SR 14, which are preferably digital signals. Complex signal ZH comprises a number of output signals generated by the system, preferably including signals indicating the existence and localization of an area or object in motion, and the speed V and the oriented direction of displacement Dl of pixels of the image. Also output from the system, if desired, is input digital video signal S, which is delayed (SR) to make it synchronous with the output ZH for the frame, taking into account the calculation time for the data in composite signal ZH (one frame). The delayed signal SR is used to display the image received by camera 13 on a monitor or television screen 10, which may also be used to display the information contained in composite signal ZH. Composite signal ZH may also be transmitted to a separate processing assembly 10a in which further processing of the signal may be accomplished.

Referring to Fig. 2, image processing system 11 includes a first assembly 11a, which consists of a temporal processing unit 15 having an associated memory 16, a spatial processing unit 17 having a delay unit 18 and sequencing unit 19, and a pixel clock 20, which generates a clock signal HP, and which serves as a clock for temporal processing unit 15 and sequencing unit 19. Clock pulses HP are generated by clock 20 at the pixel rate of the image, which is preferably 13.5 MHZ.

Fig. 3 shows the operation of temporal processing unit 15, the function of which is to smooth the video signal and generate a number of outputs that are utilized by spatial processing unit 17. During processing, temporal processing unit 15 retrieves from memory 16 the smoothed pixel values LJ of the digital video signal from the immediately prior frame, and the values of a smoothing time constant CI for each pixel. As used herein, LO and CO shall be used to denote the pixel values (L) and time constants (C) stored in memory 16 from temporal processing unit 15, and LJ and CJ shall denote the pixel values (L) and time constants (C) respectively for such values retrieved from memory 16 for use by temporal processing unit 15. Temporal processing unit 15 generates a binary output signal DP for each pixel, which identifies whether the pixel has undergone significant variation, and a digital signal CO, which represents the updated calculated value of time constant C.

Referring to Fig. 3, temporal processing unit 15 includes a first block 15a which receives the pixels PI of input video signal S. For each pixel PI, the temporal processing unit retrieves from memory 16 a smoothed value LJ of this pixel from the immediately preceding corresponding frame, which was calculated by temporal processing unit 15 during processing of the immediately prior frame and stored in memory 16 as LO. Temporal processing unit 15 calculates the absolute value AB of the difference ~~between each pixel value PI and LJ for the same pixel position~~ (for example $a_{1,1}$, of $I_{1,1}$ in TR_1 and of $I_{1,1}$ in TR_2 :

$$AB = |PI-LJ|$$

Temporal processing unit 15 is controlled by clock signal HP from clock 20 in order to maintain synchronization with the incoming pixel stream. Test block 15b of temporal processing unit 15 receives signal AB and a threshold value SE. Threshold SE

may be constant, but preferably varies based upon the pixel value PI, and more preferably varies with the pixel value so as to form a gamma correction. Known means of varying SE to form a gamma correction is represented by the optional block 15c shown in dashed lines. Test block 15b compares, on a pixel-by-pixel basis, digital signals AB and SE in order to determine a binary signal DP. If AB exceeds threshold SE, which indicates that pixel value PI has undergone significant variation as compared to the smoothed value LI of the same pixel in the prior frame, DP is set to "1" for the pixel under consideration. Otherwise, DP is set to "0" for such pixel.

When DP = 1, the difference between the pixel value PI and smoothed value LI of the same pixel in the prior frame is considered too great, and temporal processing unit 15 attempts to reduce this difference in subsequent frames by reducing the smoothing time constant C for that pixel. Conversely, if DP = 0, temporal processing unit 15 attempts to increase this difference in subsequent frames by increasing the smoothing time constant C for that pixel. These adjustments to time constant C as a function of the value of DP are made by block 15c. If DP = 1, block 15c reduces the time constant by a unit value U so that the new value of the time constant CO equals the old value of the constant CI minus unit value U:

$$CO = CI - U$$

If DP = 0, block 15c increases the time constant by a unit value U so that the new value of the time constant CO equals the old value of the constant CI plus unit value U.

$$CO = CI + U$$

Thus, for each pixel, block 15c receives the binary signal DP from test unit 15b and time constant CI from memory 16, adjusts CI up or down by unit value U, and generates a new time constant CO which is stored in memory 16 to replace time constant CI.

In a preferred embodiment, time constant C, is in the form 2^p, where p is incremented or decremented by unit value U, which preferably equals 1, in block 15c. Thus, if DP = 1, block 15c subtracts one (for the case where U=1) from p in the time

constant 2^p which becomes 2^{p-1}. If DP = 0, block 15c adds one to p in time constant 2^p, which becomes 2^{p+1}. The choice of a time constant of the form 2^p facilitates calculations and thus simplifies the structure of block 15c.

Block 15c includes several tests to ensure proper operation of the system. First, CO must remain within defined limits. In a preferred embodiment, CO must not become negative ($CO \geq 0$) and it must not exceed a limit N ($CO \leq N$), which is preferably seven. In the instance in which CI and CO are in the form 2^p, the upper limit N is the maximum value for p.

The upper limit N may either be constant or variable. If N is variable, an optional input unit 15f includes a register or memory that enables the user, or another controller to vary N. The consequence of increasing N is to increase the sensitivity of the system to detecting displacement of pixels, whereas reducing N improves detection of high speeds. N may be made to depend on PI (N may vary on a pixel-by-pixel basis, if desired) in order to regulate the variation of LO as a function of the level of PI, i.e., $N_{ij} = f(PI_{ij})$, the calculation of which is done in block 15f, which in this case would receive the value of PI from video camera 13.

Finally, a calculation block 15d receives, for each pixel, the new time constant CO generated in block 15c, the pixel values PI of the incoming video signal S, and the smoothed pixel value LI of the pixel in the previous frame from memory 16. Calculation block 15d then calculates a new smoothed pixel value LO for the pixel as follows:

$$LO = LI + (PI - LI) / CO$$

If $CO = 2^p$, then

$$LO = LI + (PI - LI) / 2^{po}$$

where "po", is the new value of p calculated in unit 15c and which replaces previous value of "pi" in memory 16.

The purpose of the smoothing operation is to normalize variations in the value of each pixel PI of the incoming video signal for reducing the variation differences. For each pixel of the frame, temporal processing unit 15 retrieves LI and CI from memory 16,

and generates new values LO (new smoothed pixel value) and CO (new time constant) that are stored in memory 16 to replace LI and CI respectively. As shown in Fig. 2, temporal processing unit 15 transmits the CO and DP values for each pixel to spatial processing unit 17 through the delay unit 18.

The capacity of memory 16 assuming that there are R pixels in a frame, and therefore 2R pixels per complete image, must be at least 2R(e+f) bits, where e is the number of bits required to store a single pixel value LI (preferably eight bits), and f is the number of bits required to store a single time constant CI (preferably 3 bits). If each video image is composed of a single frame (progressive image), it is sufficient to use R(e+f) bits rather than 2R(e+f) bits.

Spatial processing unit 17 is used to identify an area in relative movement in the images from camera 13 and to determine the speed and oriented direction of the movement. Spatial processing unit 17, in conjunction with delay unit 18, cooperates with a control unit 19 that is controlled by clock 20, which generates clock pulse HP at the pixel frequency. Spatial processing unit 17 receives signals DP_{ij} and CO_{ij} (where i and j correspond to the x and y coordinates of the pixel) from temporal processing unit 15 and processes these signals as discussed below. Whereas temporal processing unit 15 processes pixels within each frame, spatial processing unit 17 processes groupings of pixels within the frames.

Fig. 5 diagrammatically shows the temporal processing of successive corresponding frame sequences TR_1, TR_2, TR_3 and the spatial processing in the these frames of a pixel PI with coordinates x, y, at times t_1, t_2, and t_3. A plane in Fig. 5 corresponds to the spatial processing of a frame, whereas the superposition of frames corresponds to the temporal processing of successive frames.

Signals DP_{ij} and CO_{ij} from temporal processing unit 15 are distributed by spatial processing unit 17 into a first matrix 21 containing a number of rows and columns much smaller than the number of lines L of the frame and the number of pixels M per line. Matrix 21 preferably includes 2l + 1 lines along the y axis and 2m+1 columns along the x axis (in Cartesian coordinates), where l and m are small integer numbers. Advantageously, l and m are chosen to be powers of 2, where for example l is equal to 2^a and m is equal to 2^b, a and b being integer numbers of about 2 to 5, for example. To simplify the drawing and the explanation, m will be taken to be equal to l (although it may be different) and $m = l = 2^3 = 8$. In this case, matrix 21 will have 2 x 8 + 1 = 17 rows and

17 columns. Fig. 4 shows a portion of the 17 rows Y_0, Y_1,... Y_{15}, Y_{16} and 17 columns X_0, X_1 ...X_{15}, X_{16} which form matrix 21.

Spatial processing unit 17 distributes into l x m matrix 21 the incoming flows of DP_{ij} and CO_{ij} from temporal processing unit 15. It will be appreciated that only a subset of all DP_{ij} and CO_{ij} values will be included in matrix 21, since the frame is much larger, having L lines and M pixels per row (e.g., 312.5 lines and 250-800 pixels), depending upon the TV standard used.

In order to distinguish the L x M matrix of the incoming video signal from the l x m matrix 21 of spatial processing unit 17, the indices i and j will be used to represent the coordinates of the former matrix (which will only be seen when the digital video signal is displayed on a television screen or monitor) and the indices x and y will be used to represent the coordinates of the latter. At a given instant, a pixel with an instantaneous value PI_{ij} is characterized at the input of the spatial processing unit 17 by signals DP_{ij} and Co_{ij}. The (2n+1) x (2m+1) matrix 21 is formed by scanning each of the L x M matrices for DP and CO.

In matrix 21, each pixel is defined by a row number between 0 and 16 (inclusive), for rows Y_0 to Y_{16} respectively, and a column number between 0 and 16 (inclusive), for columns X_0 to X_{16} respectively, in the case in which $l = m = 8$. In this case, matrix 21 will be a plane of 17 x 17 = 289 pixels.

In Fig. 4, elongated horizontal rectangles Y_0 to Y_{16} (only four of which have been shown, i.e., Y_0, Y_1,Y_{15} and Y_{16}) and vertical lines X_0 to X_{16} (of which only four have been shown, i.e., X_0, X_1,X_{15} and X_{16}) illustrate matrix 21 with 17 x 17 image points or pixels having indices defined at the intersection of an ordinate row and an abscissa column. For example, the P_{88} is at the intersection of column 8 and row 8 as illustrated in Fig. 4 at position g, which is the center of matrix 21.

In response to the HP and BL signals from clock 20 (Fig. 2), a rate control or sequencing unit 19: i) generates a line sequence signal SL at a frequency equal to the quotient of 13.5 MHZ (for an image with a corresponding number of pixels) divided by the number of columns per frame (for example 400) to delay unit 18, ii) generates a frame signal SC, the frequency of which is equal to the quotient 13.5/400 MHZ divided by the number of rows in the video image, for example 312.5, iii) and outputs the HP clock signal. Blanking signal BL is used to render sequencing unit 19 non-operational during synchronization signals in the input image.

A delay unit 18 carries out the distribution of portions of the L x M matrix into matrix 21. Delay unit 18 receives the DP, CO, and incoming pixel S(PI) signals, and distributes these into matrix 21 using clock signal HP and line sequence and column sequence signals SL and SC.

In order to form matrix 21 from the incoming stream of DP and CO signals, the successive rows Y_0 to Y_{16} for the DP and CO signals must be delayed as follows:

row Y_0 - not delayed ;

row Y_1 - delayed by the duration of a frame line TP;

row Y_2 - delayed by 2 TP;

and so on until

row Y_{16} - delayed by 16 TP.

The successive delays of the duration of a frame row TP, are carried out in a cascade of sixteen delay circuits $r_1,r_2,...r_{16}$ that serve rows $Y_1,Y_2...Y_{16}$, respectively, row Y_0 being served directly by the DP and CO signals without any delay upon arriving from temporal processing unit 15. All delay circuits $r_1,r_2,...r_{16}$ may be built up by a delay line with sixteen outputs, the delay imposed by any section thereof between two successive outputs being constant and equal to TP.

Rate control unit 19 controls the scanning of the entire L x M frame matrix over matrix 21. The circular displacement of pixels in a row of the frame matrix on the 17 x 17 matrix, for example from X_0 to X_{16} on row Y_0, is done by a cascade of sixteen shift registers d on each of the 17 rows from Y_0 to Y_{16} (giving a total of 16 x 17 = 272 shift registers) placed in each row between two successive pixel positions, namely the register d_{01} between positions PI_{00} and PI_{01}, register d_{02} between positions PI_{01} and PI_{02}, etc. Each register imposes a delay TS equal to the time difference between two successive pixels in a row or line, using column sequence signal SC. Because rows l_1,l_2 ... l_{17} in a frame TR_1 (Fig.1), for S(PI) and for DP and CO, reach delay unit 18 shifted by TP (complete duration of a row) one after the other, and delay unit 18 distributes them with gradually increasing delays of TP onto rows Y_0, Y_1,... Y_{17}, these rows display the DP and CO signals at a given time for rows l_1, l_2,...l_{17} in the same frame portion. Similarly in a given row, e.g., $l1$, successive pixel signals $a_{1,1}$, $a_{1,2}$ . . arrive shifted by TS and shift registers d impose a delay also equal to TS. As a result, the pixels of the DP and CO signals in a given row Y_0 to Y_{16} in matrix 21, are contemporary, i.e., they correspond to the same frame portion.

SAMSUNG EXHIBIT 1004
Page 265 of 404

The signals representing the COs and DPs in matrix 21 are available at a given instant on the 16 x 17 = 272 outputs of the shift registers, as well as upstream of the registers ahead of the 17 rows, i.e. registers $d_{0,1}$, $d_{1,1}$ ... $d_{16,1}$, which makes a total of 16 x 17 + 17 = 17 x 17 outputs for the 17 x 17 positions $P_{0,0}$, $P_{0,1}$,...$P_{8,8}$...$P_{16,16}$.

In order to better understand the process of spatial processing, the system will be described with respect to a small matrix M3 containing 3 rows and 3 columns where the central element of the 9 elements thereof is pixel e with coordinates x = 8, y = 8 as illustrated below:

a	b	c
d	e	f
g	h	i

(M3)

In matrix M3, positions a, b, c, d, f, g, h, i around the central pixel e correspond to eight oriented directions relative to the central pixel The eight directions may be identified using the Freeman code illustrated in Fig. 6, the directions being coded 0 to 7 starting from the x axis, in steps of 45 °. In the Freeman code, the eight possible oriented directions, may be represented by a 3-bit number since $2^3 = 8$.

Considering matrix M3. the 8 directions of the Freeman code are as follows:

3	2	1
4	e	0
5	6	7

Returning to matrix 21 having 17 x 17 pixels, a calculation unit 17a examines at the same time various nested square second matrices centered on e, with dimensions 15 x 15, 13 x 13, 11 x 11, 9 x 9, 7 x 7, 5 x 5 and 3 x 3, within matrix 21, the 3 x 3 matrix being the M3 matrix mentioned above. Spatial processing unit 17 determines which matrix is the smallest in which pixels with DP = 1 are aligned along a straight line which determines the direction of movement of the aligned pixels.

For the aligned pixels in the matrix, the system determines if CO varies on each side of the central position in the direction of alignment, from +a in an oriented direction and -a in the opposite oriented direction, where 1 <a<N. For example, if

SAMSUNG EXHIBIT 1004
Page 266 of 404

positions g, e, and c of M3 have values -1, 0, +1, then a displacement exists in this matrix from right to left in the (oriented) direction 1 in the Freeman code (Fig. 6). However, positions g, e, and c must at the same time have DP= 1. The displacement speed of the pixels in motion is greater when the matrix, among the 3 x 3 to 15 x 15 nested matrices, in which CO varies from +1 or -1 between two adjacent positions along a direction is larger. For example, if positions g, e, and c in the 9 x 9 matrix denoted M9 have values -1, 0, +1 in oriented direction 1, the displacement will be faster than for values -1, 0, +1 in 3 x 3 matrix M3 (Fig. 7). The smallest matrix for which a line meets the test of DP= 1 for the pixels in the line and CO varies on each side of the central position in the direction of alignment, from +a in an oriented direction and -a in the opposite oriented direction, is chosen as the principal line of interest.

In a further step in the smallest matrix 3x3, the validity of the calculation with a variation of plus or minus two units (Co) with DP=1 determines a subpixel movement i.e. one half of pixel per image.

In the same way if the variation is of plus or minus 3, the movement is still slower i.e. one third of pixel per image.

One improvement for reducing the power of calculation is to test only the values which are symetrical relative to the central value. The test DP= 1 and CO=±1 or CO=±2 and ±3 in the smallest matrix allows to simplify the hardware.

Since CO is represented as a power of 2 in a preferred embodiment, an extended range of speeds may be identified using only a few bits for CO, while still enabling identification of relatively low speeds. Varying speed may be detected because, for example -2, 0, +2 in positions g, e, c in 3 x 3 matrix M3 indicates a speed half as fast as the speed corresponding to 1, 0, +1 for the same positions in matrix M3.

Two tests are preferably performed on the results to remove uncertainties. The first test chooses the strongest variation, in other words the highest time constant, if there are variations of CO along several directions in one of the nested matrices. The second test arbitrarily chooses one of two (or more) directions along which the variation of CO is identical, for example by choosing the smallest value of the Freeman code, in the instance when identical lines of motion are directed in a single matrix in different directions This usually arises when the actual direction of displacement is approximately between two successive coded directions in the Freeman code, for example between directions 1 and 2

corresponding to an (oriented) direction that can be denoted 1.5 (Fig. 6) of about 67.5° with the x axis direction (direction 0 in the Freeman code).

The scanning of an entire frame of the digital video signal S preferably occurs in the following sequence. The first group of pixels considered is the first 17 rows or lines of the frame, and the first 17 columns of the frame. Subsequently, still for the first 17 rows of the frame, the matrix is moved column by column from the left of the frame to the right, as shown in Fig. 5, i.e. from portion TM_1 at the extreme left, then TM_2 offset by one column with respect to TM_1, until TM_M (where M is the number of pixels per frame line or row) at the extreme right. Once the first 17 rows have been considered for each column from left to right, the process is repeated for rows 2 to 18 in the frame. This process continues, shifting down one row at a time until the last group of lines at the bottom of the frame, i.e., lines L - 16 ... L (where L is the number of lines per frame) are considered.

Spatial processing unit 17 generates the following output signals for each pixel: i) a signal V representing the displacement speed for the pixel, based upon the amplitude of the maximum variation of CO surrounding the pixel, the value of which may be, for example, represented by an integer in the range 0 - 7 if the speed is in the form of a power of 2, and therefore may be stored in 3 bits, ii) a signal DI representing the direction of displacement of the pixel, which is calculated from the direction of maximum variation, the value of DI being also preferably represented by an integer in the range 0 - 7 corresponding to the Freeman code, stored in 3 bits, iii) a binary validation signal VI, which indicates whether the result of the speed and oriented direction is valid, in order to be able to distinguish a valid output with V = 0 and DI = 0, from the lack of an output due to an incident, this signal being 1 for a valid output or 0 for an invalid output, iv) a time constant signal CO, stored in 3 bits, for example, and v) a delayed video signal SR consisting of the input video signal S delayed in the delay unit 18 by 16 consecutive line durations TR and therefore by the duration of the distribution of the signal S in the 17x 17 matrix 21, in order to obtain a video signal timed to matrix 21, which may be displayed on a television set or monitor. Also output are the clock signal HP, line sequence signal SL and column sequence signal SC from control unit 19.

An improvement in the calculation of the motion where several directions are responsive at the same time consists in testing by group of 3 contiguous directions the validity of the operations and to select only the central value.

Nested hexagonal matrices (Fig 8) or an inverted L-shaped matrix (Fig. 9) may be substituted for the nested rectangular matrices in Figs. 4 and 7. In the case shown in Fig. 8, the nested matrices (in which only the most central matrices MR1 and MR2 have been shown) are all centered on point MR0 which corresponds to the central point of matrices M3, M9 in Fig. 7. The advantage of a hexagonal matrix system is that it allows the use of oblique coordinate axes x_u, y_u, and a breakdown into triangles with identical sides, to carry out an isotropic speed calculation.

The matrix in Fig. 9 is composed of a single row (L_u) and a single column (C_u) starting from the central position MR_u in which the two signals DP and CO respectively are equal to "1" for DP and increase or decrease by one unit for CO, if movement occurs.

If movement is in the direction of the x coordinate, the CO signal is identical in all positions (boxes) in column C_u, and the binary signal DP is equal to 1 in all positions in row L_u, from the origin MR_u, with the value CO_u, up to the position in which CO is equal to CO_u +1 or -1 inclusive. If movement is in the direction of the y coordinate, the CO signal is identical in all positions (boxes) in row L_u, and the binary signal DP is equal to 1 in all positions in column C_u, from the origin MR_u, with the value CO_u, up to the position in which CO is equal to CO_u +1 or -1 inclusive. If movement is oblique relative to the x and y coordinates, the binary signal DP is equal to 1 and CO is equal to CO_u in positions (boxes) of L_u and in positions (boxes) of C_u, the slope being determined by the perpendicular to the line passing through the two positions in which the signal CO_u changes by the value of one unit, the DP signal always being equal to 1.

Fig 9 shows the case in which DP = 1 and CO_u changes value by one unit in the two specific positions L_{u3} and C_{u5} and indicates the corresponding slope P_p. In all cases, the displacement speed is a function of the position in which CO changes value by one unit. If CO changes by one unit in L_u or C_u only, it corresponds to the value of the CO variation position. If CO changes by one unit in a position in L_u and in a position in C_u, the speed is proportional to the distance between MR_u and P_x (intersection of the line perpendicular to C_u-L_u passing through MR_u).

Fig.9a shows an imaging device with sensors located at the crossings of concentric lines c and radial lines d, said lines corresponding to the rows and columns of a rectangular matrix imaging device.

An angular sector shaped odd matrix nxn Mc is associated to said imaging device.

The operation of such imaging arrangement is controlled by a circular scanning sequencer.

Except the sequencing differences, the operation of this arrangement is identical to that of the square matrix arrangement.

As shown in Figs 10 - 14, image processing system 11 is used in connection with a histogram processor 22a for identifying objects within the input signal based upon userspecified criteria for identifying such objects. A bus Z-Z_1 (See Figs. 2, 10 and 11) transfers the output signals of image processing system 11 to histogram processor 22a. Histogram processor 22a generates composite output signal ZH which contains information on the areas in relative movement in the scene.

Referring to Fig. 11, histogram processor 22a includes a bus 23 for communicating signals between the various components thereof. Histogram formation and processing blocks 24 - 29 receive the various input signals, i.e., delayed digital video signal SR, speed V, oriented directions (in Freeman code) DI, time constant CO, first axis x(m) and second axis y(m), which are discussed in detail below. The function of each histogram formation block is to enable a histogram to be formed for the domain associated with that block. For example, histogram formation block 24 receives the delayed digital video signal SR and enables a histogram to be formed for the luminance values of the video signal. Since the luminance of the signal will generally be represented by a number in the range of 0-255, histogram formation block 24 is preferably a memory addressable with 8 bits, with each memory location having a sufficient number of bits to correspond to the number of pixels in a frame.

Histogram formation block 25 receives speed signal V and enables a histogram to be formed for the various speeds present in a frame. In a preferred embodiment, the speed is an integer in the range 0-7. Histogram formation block 25 is then preferably a memory addressable with 3 bits, with each memory location having a sufficient number of bits to correspond to the number of pixels in a frame.

Histogram formation block 26 receives oriented direction signal DI and enables a histogram to be formed for the oriented directions present in a frame. In a preferred embodiment, the oriented direction is an integer in the range 0-7, corresponding to the Freeman code. Histogram formation block 26 is then preferably a memory addressable with 3 bits, with each memory location having a sufficient number of bits to correspond to the number of pixels in a frame.

Histogram formation block 27 receives time constant signal CO and enables a histogram to be formed for the time constants of the pixels in a frame In a preferred embodiment, the time constant is an integer in the range 0-7. Histogram formation block 27 is then preferably a memory addressable with 3 bits, with each memory location having a sufficient number of bits to correspond to the number of pixels in a frame.

Histogram formation blocks 28 and 29 receive the x and y positions respectively of pixels for which a histogram is to be formed, and form histograms for such pixels, as discussed in greater detail below. Histogram formation block 28 is preferably addressable with the number of bits corresponding to the number of pixels in a line, with each memory location having a sufficient number of bits to correspond to the number of lines in a frame, and histogram formation block 29 is preferably addressable with the number of bits corresponding to the number of lines in a frame, with each memory location having a sufficient number of bits to correspond to the number of pixels in a line.

Referring to Figs. 12 and 13, each of the histogram formation blocks 24 - 29 has an associated validation block 30 - 35 respectively, which generates a validation signal V1 - V6 respectively. In general, each of the histogram formation blocks 24-29 is identical to the others and functions in the same manner. For simplicity, the invention will be described with respect to the operation of histogram formation block 25, it being appreciated that the remaining histogram formation blocks operate in a like manner. Histogram formation block 25 includes a histogram forming portion 25a, which forms the histogram for that block, and a classifier 25b, for selecting the criteria of pixels for which the histogram is to be formed. Histogram forming portion 25a and classifier 25b operate under the control of computer software in an integrated circuit 25c, which extracts certain limits of the histogram generated by the histogram formation block.

Referring to Fig. 13, histogram forming portion 25a includes a memory 100, which is preferably a conventional digital memory. In the case of histogram formation block 25 which forms a histogram of speed, memory 100 is sized to have addresses 0-7, each of which may store up to the number of pixels in an image. Between frames, memory 100 is initiated, i.e., cleared of all memory, by setting *init*=1 in multiplexors 102 and 104. This has the effect, with respect to multiplexor 102 of selecting the "0" input, which is output to the Data In line of memory 100. At the same time, setting *init*=1 causes multiplexor 104 to select the Counter input, which is output to the Address line of memory 100. The Counter input is connected to a counter (not shown) that counts through

all of the addresses for memory 100, in this case 0≤address≤7. This has the effect of placing a zero in all memory addresses of memory 100. Memory 100 is preferably cleared during the blanking interval between each frame. After memory 100 is cleared, the *init* line is set to zero, which in the case of multiplexor 102 results in the content of the Data line being sent to memory 100, and in the case of multiplexor 104 results in the data from spatial processing unit 117, i.e., the V data, being sent to the Address line of memory 100.

Classifier 25b enables only data having selected classification criteria to be considered further, meaning to possibly be included in the histograms formed by histogram formation blocks 24-29. For example, with respect to speed, which is preferably a value in the range of 0-7, classifier 25b may be set to consider only data within a particular speed category or categories, e.g., speed 1, speeds 3 or 5, speed 3-6, etc. Classifier 25b includes a register 106 that enables the classification criteria to be set by the user, or by a separate computer program. By way of example, register 106 will include, in the case of speed, eight registers numbered 0-7. By setting a register = 1", e.g., register number 2, only data that meets the criteria of the selected class, e.g., speed 2, will result in a classification output of "1". Expressed mathematically, for any given register in which R(k) = b, where k is the register number and b is the boolean value stored in the register:

$$\text{Output} = R(\text{data}(V))$$

So for a data point V of magnitude 2, the output of classifier 25b will be "1" only if R(2)=1. The classifier associated with histogram formation block 24 preferably has 256 registers, one register for each possible luminance value of the image. The classifier associated with histogram formation block 26 preferably has 8 registers, one register for each possible direction value. The classifier associated with histogram formation block 27 preferably has 8 registers, one register for each possible value of CO. The classifier associated with histogram formation block 28 preferably has the same number of registers as the number of pixels per line. Finally, the classifier associated with histogram formation block 29 preferably has the same number of registers as the number of lines per frame. The output of each classifier is communicated to each of the validation blocks 30-35 via bus 23, in the case of histogram formation blocks 28 and 29, through combination unit 36, which will be discussed further below.

Validation units 30-35 receive the classification information in parallel from all classification units in histogram formation blocks 24 - 29. Each validation unit generates a validation signal which is communicated to its associated histogram formation block 24 - 29. The validation signal determines, for each incoming pixel, whether the histogram formation block will utilize that pixel in forming it histogram. Referring again to Fig. 13, which shows histogram formation block 25, validation unit 31 includes a register block 108 having a register associated with each histogram formation block, or more generally, a register associated with each data domain that the system is capable of processing, in this case, luminance, speed, direction, CO, and x and y position. The content of each register in register block 108 is a binary value that may be set by a user or by a computer controller. Each validation unit receive via bus 23 the output of each of the classifiers, in this case numbered 0 ... p, keeping in mind that for any data domain, e.g., speed, the output of the classifier for that data domain will only be "1" if the particular data point being considered is in the class of the registers set to " 1 " in the classifier for that data domain. The validation signal from each validation unit will only be "1" if for each register in the validation unit that is set to "1", an input of "1" is received from the classifier for the domain of that register. This may be expressed as follows:

$$out = (\overline{in}_0 + \mathrm{Reg}_0).(\overline{in}_1 + \mathrm{Reg}_1)\ldots(\overline{in}_n + \mathrm{Reg}_n)(in_0 + in_1 + \ldots in_n)$$

where Reg_0 is the register in the validation unit associated with input in_0. Thus, using the classifiers in combination with validation units 30 - 35, the system may select for processing only data points in any selected classes within any selected domains. For example, the system may be used to detect only data points having speed 2, direction 4, and luminance 125 by setting each of the following registers to " 1 ": the registers in the validation units for speed, direction, and luminance, register 2 in the speed classifier, register 4 in the direction classifier, and register 125 in the luminance classifier. In order to form those pixels into a block, the registers in the validation units for the x and y directions would be set to " 1 " as well.

Referring again to Fig. 13, validation signal V2 is updated on a pixel-by-pixel basis. If, for a particular pixel, validation signal V2 is "1", adder 110 increments the output of memory 100 by one. If, for a particular pixel, validation signal V2 is "0", adder

100 does not increments the output of memory. In any case, the output of adder 100 is stored in memory 100 at the address corresponding to the pixel being considered. For example, assuming that memory 100 is used to form a histogram of speed, which may be categorized as speeds 0-7, and where memory 100 will include 0-7 corresponding memory locations, if a pixel with speed 6 is received, the address input to multiplexor 104 through the data line will be 6. Assuming that validation signal V2 is " 1", the content in memory at location 6 will be incremented. Over the course of an image, memory 100 will contain a histogram of the pixels for the image in the category associated with the memory. If, for a particular pixel, validation signal V2 is "0" because that pixel is not in a category for which pixels are to be counted (e.g., because that pixel does not have the correct direction, speed, or luminance), that pixel will not be used in forming the histogram.

For the histogram formed in memory 100, key characteristics of that histogram are simultaneously computed in a unit 112. Unit 112 includes memories for each of the key characteristics, which include the minimum (MIN) of the histogram, the maximum (MAX) of the histogram, the number of points (NBPTS) in the histogram, the position (POSRMAX) of the maximum of the histogram, and the number of points (RMAX) at the maximum of the histogram. These characteristics are determined in parallel with the formation of the histogram as follows:

For each pixel with a validation signal V2 of "1":

(a) if the data value of the pixel < MIN (which is initially set to the maximum possible value of the histogram), then write data value in MIN,

(b) if the data value of the pixel > MAX (which is initially set to the minimum possible value of the histogram), then write data value in MAX;

(c) if the content of memory 100 at the address of the data value of the pixel > RMAX (which is initially set to the minimum possible value of the histogram), then i) write data value in POSRMAX and ii) write the memory output in RMAX.

(d) increment NBPTS (which is initially set to zero).

At the completion of the formation of the histogram in memory 100 at the end of each frame, unit 112 will contain important data characterizing the histogram. The histogram in each memory 100, and the characteristics of the histogram in units 112 are read during the scanning spot of each frame by a separate processor, and the memories 100 are cleared and units 112 are re-initialized for processing the next frame.

Figure 14 shows the determination of the orientation of an alignment of points relative to the direction of an analysis axis.

In this figure, the analysis axis extends with an angle relative to the horizontal side of the screen and the histogram built along the analysis axis refers to points concerned by the analysis appearing on the screen.

For the histogram calculation device five particular values are calculated:

MIN, MAX, NBPTS, RAMX, POSRMAX

The use of these values allows to obtain some rapid results.

For example, the calculation of the ratio NBPTS/RMAX i.e. the number of points involved in the histogram and the number of points in the maximal line allows to find an alignment of points perpendicular to the scanning axis.

The smaller is R and the most the alignment is perpendicular to the scanning axis.

One improvement of the calculation for example for positioning a vehicle on the road is to carryout for each pixel simultaneously an analysis according all the possible analysis axis. In an analysis region, the calculation of the ration R for all the analysis axes and the search of the smallest value of R allows to find the axis perpendicular of the analysed points and consequently to know the alignment with a positioning, from the value POSRMAX.

Presently the map is divided by 16 (180°/16).

The use of the moving pixels histogram, direction histogram and velocity histograms allows to find by reading POSRMAX the overall motion of the scene (moving camera) and in the classifying unit to inhibit these preponderant classes.

The device thus becomes responsive to elements which are subject to relative motion in the image. The use of histograms according to two perpendicular axes with these elements in relative motion as validation element allows to detect and track and objet in relative motion.

The calculation of the histogram according to a projection axis is carried out in a region delimited by the associated classifier between points a and b on the analysis axis.

An important improvement is to associate anticipation by creating an histogram of the same points with orientation and intensity of motion as input parameters.

The nominal values O-MVT corresponding to orientation of the movement and I-MVT corresponding to intensity of movement allow to modify the values a and b of the classifier of the unit connected to the calculation of the analysis axis for the calculation for the next frame. This is anticipation.

The result is greatly improved.

Fig.14a shows an example of the successive classes $C_1C_2...C_{m-1}C_m$ each representing a particular velocity, for a hypothetical velocity histogram, with their using categorization for up to 16 velocities (15 are shown) in this example. Also shown is envelope 38, which is a smoothed representation of the histogram.

In order to locate the position of an object having user specified criteria within the image, histogram blocks 28 and 29 are used to generate histograms for the x and y positions of pixels with the selected criteria. These are shown in Fig. 12 as histograms along the x and y coordinates. These x and y data are output to moving area location block 36 which combines the abscissa and ordinate information x(m), y(m), respectively into a composite signal xy(m) that is output onto bus 23. A sample composite histogram 40 is shown in Fig. 12. The various histograms and composite signal xy(m) that are output to bus 23 are used to determine if there is a moving area in the image, to localize this area, and/or to determine its speed and oriented direction. Because the area in relative movement may be in an observation plane along directions x and y which are not necessarily orthogonal, (e. g. , as discussed below with respect to Figs. 15 and 16) data change block 37 may be used to convers the x and y data to orthogonal coordinate data change block 37 receives orientation signals $x(m)_0$ and $y(m)_0$ for x(m), and $y(m)_0$, as well as pixel clock signals HP, line sequence and column sequence signals SL and SC (these three signals being grouped together in bundle F in Figs. 2, 4, and 16) and generates the orthogonal x(m), and y(m), signals that are output to histogram formation blocks 28 and 29 respectively.

In order to process pixels only within a user-defined area, the x-direction histogram formation unit may be set to process pixels only in a class of pixels defined by boundaries, i.e. XMIN and XMAX. Any pixels outside of this class will not be processed. Similarly, the y-direction histogram formation unit may be set to process pixels only in a class of pixels defined by boundaries YMIN and YMAX. Thus, the system can process pixels only in a defined rectangle by setting the XMIN and XMAX, and YMIN and YMAX values as desired. Of course, the classification criteria and validation criteria from

the other histogram formation units may be set in order to form histograms of only selected classes of pixels in selected domains in selected areas.

Fig 12 diagrammatically represents the envelopes of histograms 38 and 39, respectively in x and y coordinates, for velocity data. In this example, x_M and y_M represent the x and y coordinates of the maxima of the two histograms 38 and 39, whereas l_a and l_b for the x axis and l_c and l_d for the y axis represent the limits of the range of significant or interesting speeds, l_a and l_c being the longer limits and l_b and l_d being the upper limited of the significant portions of the histograms. Limits l_a, l_b, l_c and l_d may be set by the user or by an application program using the system, may be set as a ratio of the maximum of the histogram, e.g., $x_M/2$, or may be set as otherwise desired for the particular application.

The vertical lines L_a and L_b of abscisses l_a and l_b and the horizontal lines L_c and L_d of ordinales l_c and l_d form a rectangle that surrounds the cross hatched area 40 of significant speeds (for all x and y directions). A few smaller areas 41 with longer speeds, exist close to the main area 40, and are typically ignored. In this example, all that is necessary to characterize the area with the largest variation of the parameter for the histogram, the speed V in this particular case, is to identify the coordinates of the limits l_a, l_b, l_c and l_d and the maxima x_M and y_M, which may be readily derived for each histogram from memory 100, the data in units 112, and the xy(m) data block.

Thus, the system of the invention generates in real time, histograms of each of the parameters being detected. Assuming that it were desired to identify an object with a speed of "2" and a direction of "4", the validation units for speed and direction would be set to "1", and the classifiers for speed "2" and direction "4" would be set to "1". In addition, since it is desired to locate the object(s) with this speed and direction on the video image, the validation signals for histogram formation blocks 28 and 29, which correspond to the x and y coordinates, would be set to "1" as well. In this way, histogram formation blocks 28 and 29 would form histograms of only the pixels with the selected speed and direction, in real-time. Using the information in the histogram, and especially POSRMAX, the object with the greatest number of pixels at the selected speed and direction could be identified on the video image in real-time. More generally, the histogram formation blocks can localize objects in real-time meeting user-selected criteria, and may produce an output signal, e.g., a light or a buzzer if an object is detected. Alternatively, the information may be transmitted, e.g., by wire, optical fiber or radio

relay for remote applications, to a control unit, such as unit 10a in Fig. 1, which may be near or remote from image processing system 11.

Fig. 15 shows an example of use of the system of the invention to perform automatic framing of a person moving, for example, during a video conference. A video camera 13 observes the subject P, who may or may not be moving. A video signal S from the video camera is transmitted by wire, optical fiber, radio relay, or other communication means to a monitor 10b and to the image processing system of the invention 11. The image processing system determines the position and movement of the subject P, and controls servo motors 43 of camera 13 to direct the optical axis of the camera towards the subject and particularly towards the face of the subject, as a function of the location, speed and direction of the subject, and may vary the zoom, focal distance and/or the focus of the camera to provide the best framing and image of the subject.

Referring to Fig. 18, the system of the invention may be used to center the face of the subject in the video signal while eliminating superfluous portions of the image received by the camera 13 above, below, and to the right and left of the head of the subject. Camera 13 has a field of view 123, which is defined between directions 123a and 123b. The system rotates camera 13 using servomotors 43 so that the head T of the subject is centered on central axis 2a within cortical field 123, and also adjusts the [illegible] of camera 13 to ensure that the head T of the subject occupies a desired amount of the frames of the video signal, preferably as represented by a desired ratio of the number of pixels comprising head T to the total number of pixels per frame.

In order to accomplish this, the system of the invention may focus on the head using its luminance or motion. By way of example only, the system will be described with respect to detecting the head of the user based upon its motion. The peripheral edges of the head of the user are detected using the horizontal movements of the head, in other words, movements right and left, and the vertical movements, in other words, movements up and down. As the horizontal and vertical motion of the head is determined by the system, it is analyzed using preferred coordinate axes, preferably Cartesian coordinates Ox and Oy, in moving, area block 36 (Fig.11).

The pixels with greatest movement within the image will normally occur at the peripheral edges of the head of the subject, where even due to slight movements, the pixels will vary between the luminance of the head of the subject and the luminance of the background. Thus, if the system of the invention is set to identify only pixels with DP=1,

and to form a histogram of these pixels, the histogram will detect movement peaks along the edges of the face where variations in brightness, and therefore in pixel value, are the greatest, both in the horizontal projection along Ox and in the vertical projection along Oy.

This is illustrated in Fig.17 m which axes Ox and Oy are shown, as are histograms 124x, along Ox, and 124y, along Oy, i.e., in horizontal and vertical projections, respectively. Histograms 124x and 124y would be output from histogram formation units 28 and 29 respectively (Fig. 11).Peaks 125a and 125b of histogram 124x, and 125c and 125d of histogram 124y, delimit, by their respective coordinates 126a, 126b, 126c and 126d, a frame bounded by straight lines Ya, Yb, Xc, and Xd, which encloses the face V of the video-conference participant, and which denote areas 127a, 127b, 127c and 127d, which are areas of slight movement of the head T, which will be the areas of greatest variation in pixel intensity during these movements.

Location of the coordinates 126a, 126b, 126c and 126d, corresponding to the four peaks 125a, 125b, 125c and 125d, is preferably determined by computer software reading the x and y coordinate histograms during the spot scanning sequence of each frame. The location of the coordinates 126a, 126b, 126c and 126d of peaks 125a, 125b, 125c and 125d of histograms 124x and 124y make it possible to better define and center the position of the face V of the subject in the image. In a video conferencing system, the remainder of the image, i.e. the top bottom, right and left portions of the image, as illustrated in Fig. 18 by the cross-hatched areas surrounding the face V, may be eliminated to reduce the bandwidth required to transmit the image. The center of face V may be determined, for example, by locating the pixel position of the center of the box bounded by Ya, Yb, Xc, and Xd ((Xc + (Xd - Xc)/2), (Ya + (Yb - Ya)/2)) and by comparing this position to a desired position of face V on the screen. Servomotors 43 (Fig.13 are then actuated to move camera 13 to better center face V on the screen. Similarly, if face V is in movement,the system may detect the position of face V on the screen as it moves, and follow the movement by generating commands to servomotors 43.

If desired, the center position of face V may be determined at regular intervals, and preferably in each frame, and the average value (over time) of coordinates 126a, 126b, 126c and 126d used to modify the movement of camera 13 to center face V.

With face V centered, the system may adjust the zoom of camera 13 so that face V covers a desired amount of the image. The simples method to accomplish this

zoom function is to determine the dimensions of (or number of pixels in) the box bounded by Ya, Yb, Xc, and Xd. Camera 13 may then be zoomed in or out until desired dimensions (or pixel count) are achieved.

Another application of the invention relates to automatic tracking of a target by, for example, a spotlight or a camera. Using a spotlight, the invention might be used on a helicopter to track a moving target on the ground, or to track a performer on a stage during an exhibition. The invention would similarly be applicable to weapons targeting systems. Referring to Fig. 19, the system includes a camera 200, which is preferably a conventional CCD camera which communicates an output signal 202 to image processing system 204 of the invention. Especially for covert and military applications, it will be appreciated that the system may be used with sensor such as Radar and IR, in lieu of or in combination with, camera 200. A controller 206, which is preferably a conventional microprocessor-based controller, is used to control the various elements of the system and to enable user input of commands and controls, such as with computer mouse 210, a keyboard (not shown), or other input device. As in the prior embodiment, the system includes one or more servomotors 208 that control movement of camera 200 to track the desired target. It will be appreciated that any appropriate means may be used to control the area of interest of camera 200, including use of moving mirrors relative to a fixed camera, and the use of a steered beam, for example in a Radar system, to track the target without physically moving the sensor.

In the example shown in Fig. 20, monitor 212 is shown with five simulated objects, which may be, for example, vehicles, or performers on a stage, including four background targets 216, and one target to be tracked 218. Computer mouse 210 is used to control an icon 220 on monitor 212. The user of the system selects the target for tracking by moving icon 220 over target 218, and depressing a predetermined button on mouse 210. The pixel position of icon 220 is then used as a starting position for tracking target 216.

Referring to Fig. 21, the initial pixel starting position is shown as x_n, y_n. In order to process the pixels surrounding the starting position, image processing system 204 will process the pixels in successively larger areas surrounding the pixel, adjusting the center of the area based upon the shape of the object, until substantially the entire target area is being tracked. The initial area is set by controller 206 to include an area bounded by x_A, x_B, y_C, y_D. This is accomplished by setting these boundaries in the classification

units of x and y histogram formation units 28 and 29. Thus, the only pixels that will be processed by the system are those falling within the bounded area. Assuming that in the example given, the target is in motion, the system may be set to track pixels with DP=1. Those pixels with DP=1 would normally be located on the peripheral edges of target 218, unless the target had a strong color or luminance variation throughout, in which case, many of the pixels of the target would have DP=1. In any case, in order to locate pixels with DP=1, the validation units would be set to detect pixels with DP=1. Thus, the only pixels that will be considered by the system are those in the bounded area with DP=1. Alternatively, the system may be set to detect a velocity greater than zero, or any other criteria that define the edges of the object.

Histograms are then formed by x and y histogram formation units 28 and 29. In the example shown in Fig. 21, an insignificant number of pixels would be identified as having DP=1, since the selected area does not include the border of target 218, so no histogram would be formed. The size of the area under consideration is then successively increased, preferably by a constant size K, so that in subsequent iterations, the pixels considered would be in the box bounded by x_{A-nK}, x_{B+nK}, y_{A-nK}, y_{B+nK}, where n is the number of the current iteration.

This process is continued until the histogram formed by either of histogram formation units 28 and 29 contains meaningful information, i. e., until the box overlaps the boundary of the target. Referring to Fig. 22, when the area under consideration begins to cross the borders of target 218, the histograms 222 and 224 for the x and y projections will begin to include pixels in which DP=1 (or any other selected criteria to detect the target edge). Prior to further enlarging the area under consideration, the center of the area under consideration, which until this point has been the pixel selected by the user, will be adjusted based upon the content of histograms 222 and 224. In a preferred embodiment, the new center of the area is determined to be $(x_{MIN} + x_{MAX})/2$, $(y_{MIN} + y_{MAX})/2$, where x_{MIN} and x_{MAX} are the positions of the minima and maxima of the x projection histogram, and where y_{MIN} and y_{MAX} are the positions of the minima and maxima of the y projection histogram. This serves to adjust the area under consideration for the situation in which the initial starting position is nearer to one edge of the target than to another. Other methods of relocating the center of the target box may be used if desired.

After additional iterations, as shown in Fig. 23, it being understood that the center of the box bounding the area of consideration may have moved from the prior

iteration, the box will be larger than the target in that $x_{A\text{-}nK}<x_{MIN}$, $x_{A\text{-}nK}>x_{MAX}$, $y_{A\text{-}nK}<y_{MIN}$, and $y_{A\text{-}nK}>y_{MAX}$. When this occurs, the entire target is bounded, and the constant K may then be reduced, to thereby reduce the size of the tracking box. In a preferred embodiment, when initially tracking a target, constant K is preferably relatively large, e.g., 10-20 pixels or more, in order that the system may lock on the target expeditiously. Once a target has been locked onto, K may be reduced. It will be appreciated that in the course of tracking a target, the tracking box will be enlarged and reduced as appropriate to maintain a track of the target, and is preferably adjusted on a frame by-frame basis.

Assuming that the system is to be used to train a spotlight on the target, for example from an airborne vehicle or in a theater, the camera is preferably synchronized with the spotlight so that each is pointing at the same location. In this way, when the camera has centered the target on its image, the spotlight will be centered on the target. Having acquired the target, controller 206 controls servomotors 208 to maintain the center of the target in the center of the image. For example, if the center of the target is below and to the left of the center of the image, the camera is moved downward and to the left as required to center the target. The center of the target may be determining in real time from the contents of POSRMAX for the x and histogram formation units.

It will be appreciated that as the target moves, the targeting box will move with the target, constantly adjusting the center of the targeting box based upon the movement of the target, and enlarging and reducing the size of the targeting box. The targeting box may be displayed on monitor 212, or on another monitor as desired, to visually track the target.

A similar tracking box may be used to track an object in an image based upon its characteristics. For example, assuming it is desired to track a target moving only to the right in the image. The histogram formation units are set up so that the only validation units set to "1" are for direction and for the x and y projections. The classification unit for direction is set so that only direction "right" is set to "1". The histograms for the x and y projections will then classify only pixels moving to the right. Using these histograms, a box bounding the target may be established. For example, referring to Fig. 12, the box surrounding the target may be established using l_a, l_b, l_c, and l_d as the bounds of the box. The target box may be displayed on the screen using techniques known in the art.

After a very short initialization period on the order of about 10 frames, the invention determines the relative displacement parameters instantaneously after the end of

SAMSUNG EXHIBIT 1004
Page 282 of 404

each frame on which the temporal and spatial processing was performed due to the recursiveness of calculations according to the invention.

The invention, including components 11a and 22a is preferably formed on a single integrated circuit, or on two integrated circuits. If desired, a microcontroller, for enabling user-input to the system, e.g., to program the validation and classification units, may be integrated on the same integrated circuit.

It will be appreciated that the present invention is subject to numerous modifications. In an embodiment in which a color camera is used, the system of the invention preferably includes histogram formation units for hue and saturation. This enables classification of targets to be made using these characteristics as well. In fact, the invention may be modified by adding histogram formation units for any possible other measurable characteristics of the pixels. Moreover, while the invention has been described with respect to tracking a single target, it is foreseen that multiple targets may be tracked, each with user-defined classification criteria, by replicating the various elements of the invention. For example, assuming the system of the invention included additional histogram formation units for hue and saturation, the system could be programmed, using a common controller attached to two histogram formation processors of the type shown in Fig. 11, to track a single target by its velocity, and/or color, and/or direction, etc. In this manner, the system could continue to track a target if, for example, the target stopped and the track based upon velocity and direction was lost, since the target could still be tracked by color.

It will also be appreciated that the limitation of eight speeds may be increased by using a greater bit count to represent the speeds. Moreover, while the invention has been described with respect to detection of eight different directions, it may be applied to detect 16 or more directions by using different size matrices, e.g., sixteen directions may be detected in a 5x5matrix, to detect a greater number of directions.

Finally, Fig. 24 shows a method of tracking a wider range of speeds V if the limited number provided by p bits for time constant CO is insufficient. Using Mallat's diagram (see article by S. Mallat "A Theory for multi-resolution signal decomposition" in IEEE Transactions on Pattern Analysis and Machine Intelligence, July 1989 p. 674-693), the video image is successively broken down into halves, identified as 1, 2, 3, 4, 5, 6, 7. This creates a compression that only processes portions of the image. For example, with $p = 4$ ($2^p = 16$), the system may determine speeds within a wider range.

If initially, while processing the entire image, the system determines that the speed of an object exceeds the maximum speed determinable with $2^n=16$ for the time constant, the system uses partial observed images 1, 2, 3, 4,.... until the speed of the object does not exceed the maximum speed within the partial image after compression. To use Mallat compression with wavelets, a unit 13A (Fig. 24) is inserted into the system shown in Fig. 1 to perform the compression. For example, this unit could be composed of the "DV 601 Low Cost Multiformat Video Codec" by Analog Devices. Fig. 2 shows an optional compression unit 13a of this type.

Although the present invention has been described with respect to certain embodiments and examples, variations exist that are within the scope of the invention as described in the following claims.

CLAIMS

1. A process for identifying pixels in an input signal in one of a plurality of classes in one of a plurality of domains, the input signal comprising a succession of frames, each frame comprising a succession of pixels, the process comprising, on a frame-by-frame basis:

for each pixel of the input signal, analyzing the pixel and providing an output signal for each domain containing information to identify each domain in which the pixel is classified;

providing a classifier for each domain, the classifier enabling classification of pixels within each domain to selected classes within the domain;

providing a validation signal for the domains, the validation signal selecting one or more of the plurality of domains for processing; and

forming a histogram for pixels of the output signal within the classes selected by the classifier within each domain selected by the validation signal.

2. The process according to claim 1 further comprising:

forming histograms along coordinate axes for the pixels within the classes selected by the classifier within each domain selected by the validation signal; and forming a composite signal corresponding to the spatial position of such pixels within the frame.

3. The process according to claim 1 comprising identifying the velocity of movement of an area of an input signal, the input signal comprising a succession of frames, each frame comprising a succession of pixels, said identifying of the velocity of movement comprising :

for each particular pixel of the input signal, forming a first matrix comprising binary values indicating the existence or non-existence of a significant variation in the amplitude of the pixel signal between the current frame and a prior frame for a subset of the pixels of the frame spatially related to such particular pixel, and a second matrix comprising the amplitude of such variation;

determining in the first matrix whether the particular pixel and the pixels along an oriented direction relative to the particular pixel have binary values of a particular value representing significant variation, and, for such pixels, determining in the second matrix whether, the amplitudes of the pixels along an oriented direction relative to the particular pixel vary in a known manner indicating movement of the pixel and the

pixels along an oriented direction relative to the particular pixel, the amplitude of the variation along the oriented direction determining the velocity of movement of the particular pixel.

4. The process according to claim 3 further comprising:

prior to determining the binary values for each pixel, smoothing each pixel of the input signal using a time constant for such pixel, thereby generating a smoothed input signal, the determination of the existence of a significant variation in the amplitude of the pixel being performed for each pixel of the smoothed input signal; and using the existence of a significant variation for a given pixel to modify the time constant for the pixel to be used in smoothing subsequent frames of the input signal.

5. A process according to claim 1 for identifying a non-moving [illegible] in an input signal, the input signal comprising a succession of frames, each frame comprising a succession of pixels, the process comprising

forming histograms along coordinate axes for pixels of the input [illegible]nal without significant variation between the current frame and a prior frame; and

forming a composite signal corresponding to the spatial position of [illegible]ch pixels within the frame.

6. The process according to claim 2 or 5 further comprising identifying [illegible]ls falling within limits l_u, l_b, l_v, l_d, in the histograms along the coordinate axes, and forming the composite signal from the pixels falling within such limits.

7. The process according to claim 4 further comprising:

prior to the histogram forming step i) smoothing the input signal for each pixel thereof using a time constant for such pixel, thereby generating a smoothed input signal, and ii) determining for each pixel in the smoothed input signal a binary value corresponding to the non-existence of a significant variation in the amplitude of the pixel signal between the current frame and the immediately previous smoothed input frame.

8. The process according to claim 6 further comprising using the existence of a significant variation for a given pixel to modify the time constant for the pixel to be used in smoothing subsequent frames of the input signal.

9. A process according to claim 1 comprising identifying relative movement in an input signal, the input signal comprising a succession of frames, each frame comprising a succession of pixels, wherein the identifying of relative movement comprises :

for each pixel of the input signal, smoothing the input signal using a time constant for such pixel, thereby generating a smoothed input signal;

determining for each pixel in the smoothed input signal a binary value corresponding to the existence of a significant variation in the amplitude of the pixel between the current frame and the immediately previous smoothed input frame, and the amplitude of the variation:

using the existence of a significant variation for a given pixel, modifying the time constant for the pixel to be used in smoothing subsequent frames of the input signal;

for each particular pixel of the input signal, forming a first matrix comprising the binary values of a subset of the pixels of the frame spatially related to such particular pixel, and a second matrix comprising the amplitude of the variation of the subset of the pixels of the frame spatially related to such particular pixel;

determining in the first matrix whether the particular pixel and the pixels along an oriented direction relative to the particular pixel have binary values of a particular value representing significant variation, and, for such pixels, determining in the second matrix whether the amplitude of the pixels along the oriented direction relative to the particular pixel varies in a known manner indicating movement in the oriented direction of the particular pixel and the pixels along the oriented direction relative to the particular pixel, the amplitude of the variation of the pixels along the oriented direction determining the velocity of movement of the pixel and the pixels along the oriented direction relative to the particular pixel,

in each of one or more domains, forming a histogram of the values distributed in the first and second matrices falling in each such domain,

for a particular domain, determining from the histogram for such domain an area of significant variation;

forming histograms of the area of significant variation along coordinate axes; and determining from the histograms along the coordinate axes, whether there is an area in movement for the particular domain.

10. The process according to one of claims 1 and 9 wherein the domains are selected from the group consisting of i) luminance, ii) speed (V), iii) oriented direction (D1), iv) time constant (CO), v) hue, vi) saturation, vii) first axis (x(m)), and viii) second axis (y(m)) and ix) data characterized by external inputs.

11. The process according to claim 9 wherein the first and second matrices are square matrices with the same odd number of rows and columns, centered on the particular pixel.

12. The process according to claim 11 wherein the steps of determining in the first matrix whether the particular pixel and the pixels along an oriented direction relative to the particular pixel have binary values of a particular value representing significant variation, and the step of determining in the second matrix whether the amplitude signal varies in a predetermined criteria along an oriented direction relative to the particular pixel, comprise applying nested n x n matrices, where n is odd, centered on the particular pixel to the pixels within each of the first and second matrices, the process further comprising:

determining the smallest nested matrix in which the amplitude signal varies of predetermined values symetrical relative to the particular pixel along an oriented direction around said particular pixel.

13. The process according to claim 9 wherein the first and second matrices are hexagonal matrices centered on the particular pixel.

14. The process according to claim 13 wherein the steps of determining in the first matrix whether the particular pixel and the pixels along an oriented direction relative to the particular pixel have binary values of a particular value representing significant variation, and the step of determining in the second matrix whether the amplitude signal varies in a predetermined criteria along an oriented direction relative to the particular pixel, comprise applying nested hexagonal matrices of varying size centered on the particular pixel to the pixels within each of the first and second matrices, the process further comprising

determining the smallest nested matrix in which the amplitude signal varies of predetermined values symetrical relative to the particular pixel along an oriented direction around said particular pixel.

15. The process according to claim 9 wherein the first and second matrices are inverted L-shaped matrices with a single row and a single column.

16. The process according to claim 15 wherein the steps of determining in the first matrix whether the particular pixel and the pixels along an oriented direction relative to the particular pixel have binary values of a particular value representing significant variation, and the step of determining in the second matrix whether the amplitude signal

varies in a predetermined criteria along an oriented direction relative to the particular pixel, comprise applying nested n x n matrices, where n is odd, to the single line and the single column to determine the smallest matrix in which the amplitude varies on a line with the steepest slope and constant quantification.

17. The process according to claim 9 wherein the first and second matrices are angular sector shaped matrices reproducing a portion of an eye.

18. The process according to claim 17 wherein the steps of determining in the first matrix whether the particular pixel and the pixels along an oriented direction relative to the particular pixel have binary values of a particular value representing significant variation, and the step of determining in the second matrix whether the amplitude signal varies in a predetermined criteria along an oriented direction relative to the particular pixel, comprise applying nested angular sector shaped matrices of varying size centered on the particular pixel to the pixels within each of the first and second matrices, the process further comprising

determining the smallest nested matrix in which the amplitude signal varies of predeterminal values symetrical relative to the particular pixel along an oriented direction around said particular pixel.

19. The process according to claim 9 wherein the time constant is in the form 2^p, the time constant being reduced or increased by incrementing or decrementing p.

20. The process according to claim 19 wherein successive decreasing portions of complete frames of the input signal are considered using a Mallat time-scale algorithm and the largest of these portions, which provides displacement, speed and orientation indications compatible with the value of p, is selected.

21. The process according to claim 4, comprising:

for each pixel of the input signal, i) smoothing the pixel using a time constant (CO) for such pixel, thereby generating a smoothed pixel value (LO), ii) determining whether there exists a significant variation between such pixel and the same pixel in a previous frame, and iii) modifying the time constant (CO) for such pixel to be used in smoothing the pixel in subsequent frames of the input signal based upon the existence or non-existence of a significant variation.

22. The process according to claim 21 wherein:

(a) the step of determining the existence of a significant variation for a given pixel comprises determining whether the absolute value of the difference (AB) between

the given pixel value (PI) and the value of such pixel in a smoothed prior frame (LI) exceeds a threshold (SE); and

(b) the step of smoothing the input signal comprises, for each pixel, i) modifying a time constant (CO) for pixel such based upon the existence of a significant variation as determined in step (a), and ii) determining a smoothed value for the pixel (LO) as follows:

$$LO = LI + \frac{PI - LI}{CO}$$

23. The process according to claim 21 wherein the time constant (CO) is in the form 2^p, and wherein p is incremented in the event that AB<SE, and wherein p is decremented in the event AB≥SE.

24. The process according to claim 23 wherein p is incremented or decremented by one.

25. The process according to claim 22 further comprising generating an output signal comprising, for each pixel, a binary value (DP) indicating the existence or nonexistence of a significant variation, and the value of the time constant (CO).

26. The process according to claim 25 wherein the binary values (DP) and the time constants (CO) are stored in a memory sized to correspond to the frame size.

27. The process according to claim 1 comprising identifying an area in relative movement in said input signal, through :

generating a first array indicative of the existence of significant variation in the magnitude of each pixel between a current frame and a prior frame;

generating a second array indicative of the magnitude of significant variation of each pixel between the current frame and a prior frame, establishing a first moving matrix centered on a pixel under consideration and comprising pixels spatially related to the pixel under consideration, the first moving matrix traversing the first array for consideration of each pixel of the current frame; and

determining whether the pixel under consideration and each pixel of the pixels spatially related to the pixel under consideration along an oriented direction relative thereto within the first matrix are a particular value representing the presence of significant variation, and if so, establishing in a second matrix within the first matrix, centered on the pixel under consideration, and determining whether the amplitude of the

pixels in the second matrix spatially related to the pixel under consideration along an oriented direction relative thereto are indicative of movement along such oriented direction, the amplitude of the variation along the oriented direction being indicative of the velocity of movement, the size of the second matrix being varied to identify the matrix size most indicative of movement.

28. The process according to claim 27 further comprising:

in at least one domain selected from the group consisting of i) luminance, ii) speed (V), iii) oriented direction (D1), iv) time constant (CO), v) hue, vi) saturation, and vii) first axis (x(m)), and viii) second axis (y(m)), and ix) data characterized by external inputs, forming at least one histogram of the values in such domain for pixels indicative of movement along an oriented direction relative to the pixel under consideration.

29. The process according to claim 28 further comprising:

for the pixels in said at least one histogram, forming histograms of the position of such pixels along coordinate axes.

30. The process according to claim 29 further comprising determining from the histograms along the coordinate axes an area of the image meeting criteria of the at least one domain.

31. The process according to claim 27 wherein the first and second matrices are square, and the sizes of the second matrix are nested n x n matrices, where n is odd.

32. The process according to claim 31 wherein the matrix most indicative of movement is the smallest nested matrix containing pixels indicative of movement along an oriented direction relative to the pixel under consideration.

33. The process according to claim 27 wherein the first and second matrices are selected from the group consisting of hexagonal matrices and inverted L-shaped matrices.

34. An apparatus for identifying pixels in an input signal in one of a plurality of classes in one of a plurality of domains, the input signal comprising a succession of frames, each frame comprising a succession of pixels, the apparatus comprising:

means for analyzing each pixel of the input signal and for providing an output signal for each domain containing information to identify each domain in which the pixel is classified;

a classifier for each domain, the classifier classifying pixels within each domain in selected classes within the domain;

a linear combination unit for each domain, the linear combination unit generating a validation signal for the domain, the validation signal selecting one or more of the plurality of domains for processing; and

means for forming a histogram for pixels of the output signal within the classes selected by the classifier within each domain selected by the validation signal.

35. The apparatus according to claim 34 further comprising:

means for forming histograms along coordinate axes for the pixels within the classes selected by the classifier within each domain selected by the validation signal; and

means for forming a composite signal corresponding to the spatial position of such pixels within the frame.

36. The apparatus according to claim 34 wherein the domains are selected from the groups consisting of i) luminance, ii) speed (V), iii) oriented direction (V), iv) time constant (CO), v) hue, vi) saturation, and vii) first axis (x(m)), and viii) second axis (y(m)) and ix) data characterized by external inputs.

37. The apparatus according to claim 34 for identifying the velocity of movement of an area of an input signal, the input signal comprising a succession of frames, each frame comprising a succession of pixels the apparatus, comprising:

means for determining for each pixel in the input signal a binary value corresponding to the existence of a significant variation in the amplitude of the pixel signal between the current frame and the immediately previous smoothed input frame and for determining the amplitude of the variation;

means for forming, for each particular pixel of the input signal, a first matrix comprising the binary values of a subset of the pixels spatially related to such particular pixel, and a second matrix comprising the amplitude of the variation of the subset of the pixels spatially related to such particular pixel; and

means for determining in the first matrix whether for a particular pixel and other pixels along an oriented direction relative to the particular pixel, the binary value for each pixel is a particular value representing significant variation, and, for such particular pixel and other pixels, determining in the second matrix whether the amplitude varies along an oriented direction relative to the particular pixel in a known manner indicating movement of the pixel and the other pixels, the amplitude of the variation along the oriented direction determining the velocity of movement of the pixel and the other pixels.

38. The apparatus according to claim 37 further comprising means for smoothing each pixel of the input signal using a time constant for such pixel prior to determining a binary value for each pixel, the binary values being determined on the smoothed pixels.

39. The apparatus according to claim 34 for identifying a non-moving area in an input signal, the input signal comprising a succession of frames, each frame comprising a succession of pixels, the apparatus comprising:

means for forming histograms along coordinate axes for pixels of a current frame without a significant variation from such pixels in a prior frame; and

means for forming a composite signal corresponding to the spatial position of such pixels within the frame.

40. The apparatus according to any one of claims 34 and 39 further comprising means for identifying pixels falling within limits l_a, l_b, l_c, l_d, in the histograms along the coordinate axes, and forming the composite signal from the pixels falling within such limits.

41. The apparatus according to claim 39 further comprising:

means for smoothing the input signal using a time constant for each pixel, thereby generating a smoothed input signal; and

means for determining for each pixel in the smoothed input signal a binary value corresponding to the existence or non-existence of the significant variation in the amplitude of the pixel signal between the current frame and the immediately previous smoothed input frame.

42. The apparatus according to claim 41 further comprising means for using the existence of a significant variation for a given pixel to modify the time constant for the pixel to be used in smoothing subsequent frames of the input signal.

43. A process according to any one of claims 1-33 for tracking a target in an input signal, the input signal comprising a succession of frames, each frame comprising a succession of pixels, the target comprising pixels in one or more of a plurality of classes in one or more of a plurality of domains, the process comprising:

selecting a pixel of the target as a starting pixel;

on a frame-by-frame basis:

forming a tracking box around the starting pixel and for each pixel of the input signal in the tracking box forming a histogram of the pixels in the one or more of a plurality of classes in the one or more of a plurality of domains;

successively increasing the size of the tracking box and for each pixel of the input signal, in each successive tracking box forming a histogram of the pixels in the one or more of a plurality of classes in the one or more of a plurality of domains;

determining when the target is substantially within the tracking box, stopping the size increasing of said tracking box, and adjusting the center of the tracking box based upon the histograms.

44. A process of tracking a target in an input signal, the input signal comprising a succession of frames, each frame comprising a succession of pixels, the target comprising pixels in one or more of a plurality of classes in one or more of a plurality of domains, the process comprising, on a frame-by-frame basis: forming at least one histogram of the pixels in the one or more of a plurality of classes in the one or more of a plurality of domains, said at least one histogram referring to classes dominating said target, and identifying the target from said at least one histogram.

45. The process according to claim 44 further comprising drawing a tracking box around the target.

46. The process according to claims 43 and 45, comprising centering the tracking box relative to the optical axis of the image.

47. The apparatus according any one of claims 33-42, comprising a histogram formation block forming histograms of speed, a memory storing up to the number of pixels in an image, multiplexors controlling setting an clearing of said memory, a classifier enabling only data having selected classification criteria to be considered further, meaning to possibly be included in histograms formed by corresponding histogram formation block.

48. The apparatus of claim 47 wherein the classifier includes a register that enables the classification criteria to be set by the user or by a separate program.

49. The apparatus according to claim 47, comprising a computing unit for comprising the key characteristics for histograms formed in said memory said computing unit including memories for each of the key characteristics which include the minimum (MIN) of the histogram, the maximum (MAX) of the histogram, the number of points

(NBPTS) in the histogram, the position (POSRMAX) of the maximum of the histogram and the number of points (RMAX) at the maximum of the histogram.

50. The apparatus according to claims 47-49 further comprising an adder incrementing output of said memory, said adder being controlled by a validation signal from a corresponding validation unit receiving via a bus the output of said classifier so as to select only data points in any selected classes within any selected domains.

51. The process according to claims 43-46 comprising calculating a histogram according to a projection axis in a region delimited by an associated classifier, between two points on the projection axis, creating a histogram of the same points with orientation and intensity of motion as input parameters and modifying the values corresponding to said two points of the classifier and calculate an anticipated next frame.

ABSTRACT OF THE DISCLOSURE

A method and apparatus for localizing an area in relative movement and for determining the speed and direction thereof in real time is disclosed. Each pixel of an image is smoothed using its own time constant. A binary value corresponding to the existence of a significant variation in the amplitude of the smoothed pixel from the prior frame, and the amplitude of the variation, are determined, and the time constant for the pixel is updated. For each particular pixel, two matrices are formed that include a subset of the pixels spatially related to the particular pixel. The first matrix contains the binary values of the subset of pixels. The second matrix contains the amplitude of the variation of the subset of pixels. In the first matrix, it is determined whether the pixels along an oriented direction relative to the particular pixel have binary values representative of significant variation, and, for such pixels, it is determined in the second matrix whether the amplitude of these pixels varies in a known manner indicating movement in the oriented direction. In each of several domains, a histogram of the values in the first and second matrices falling in such domain is formed. Using the histograms, it is determined whether there is an area having the characteristics of the particular domain. The domains include luminance, hue, saturation, speed (V), oriented direction (DI), time constant (CO), first axis (x(m)), and second axis (y(m)).

Figure 4.

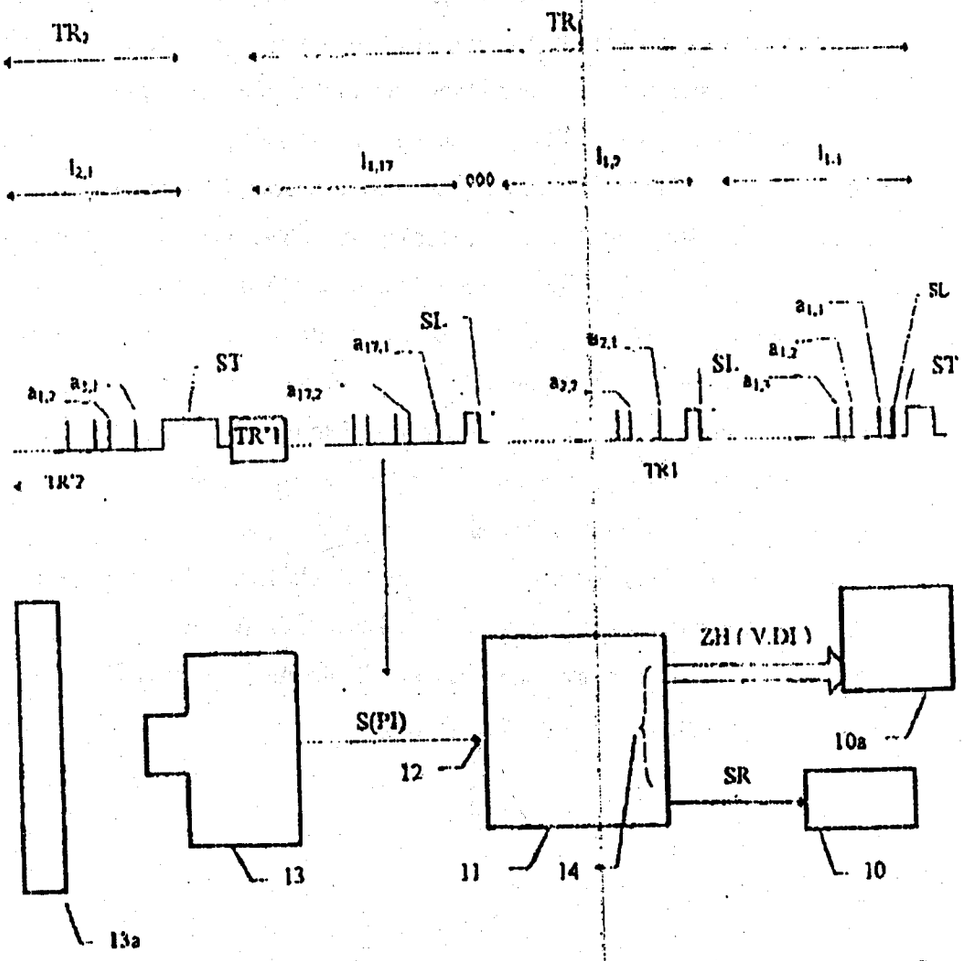
TR2
TR1
l2,1
l1,17
000
l1,2
l1,1
a1,2
a1,1
ST
TR'2
TR'1
a17,2
a17,1
SL
TR2
a2,2
a2,1
SL
TR1
a1,2
a1,1
SL
ST
13a
13
S(PI)
12
11
14
ZH (V.DI)
10a
SR
10

FIG. 1

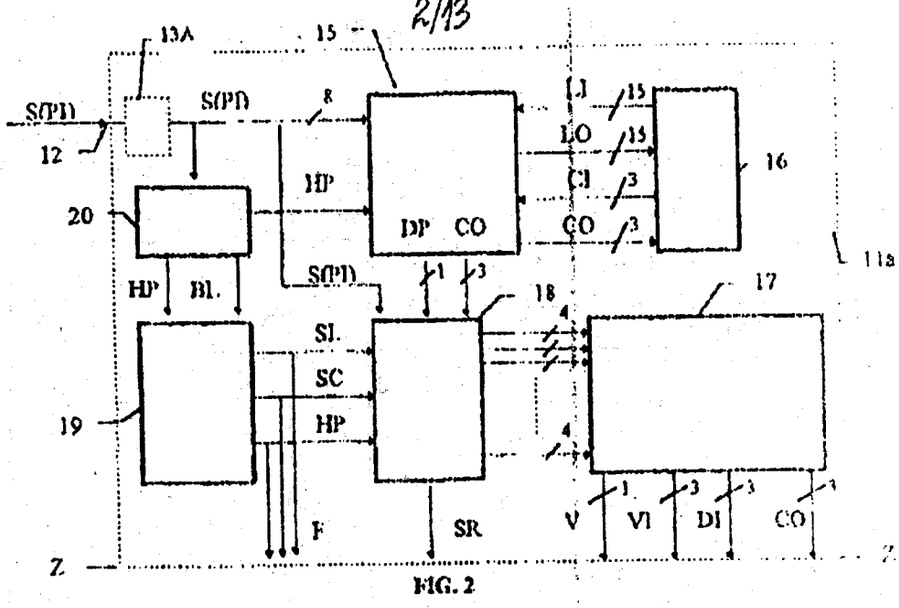
13A
15
S(PI)
12
S(PI)
8
HP
20
DP CO
LI
15
LO
15
CI
3
CO
3
16
11a
HP
BL.
S(PI)
1
3
18
17
SL.
SC
HP
19
4
4
F
SR
V
1
VI
3
DI
3
CO
3
Z
Z

FIG. 2

FIG. 3

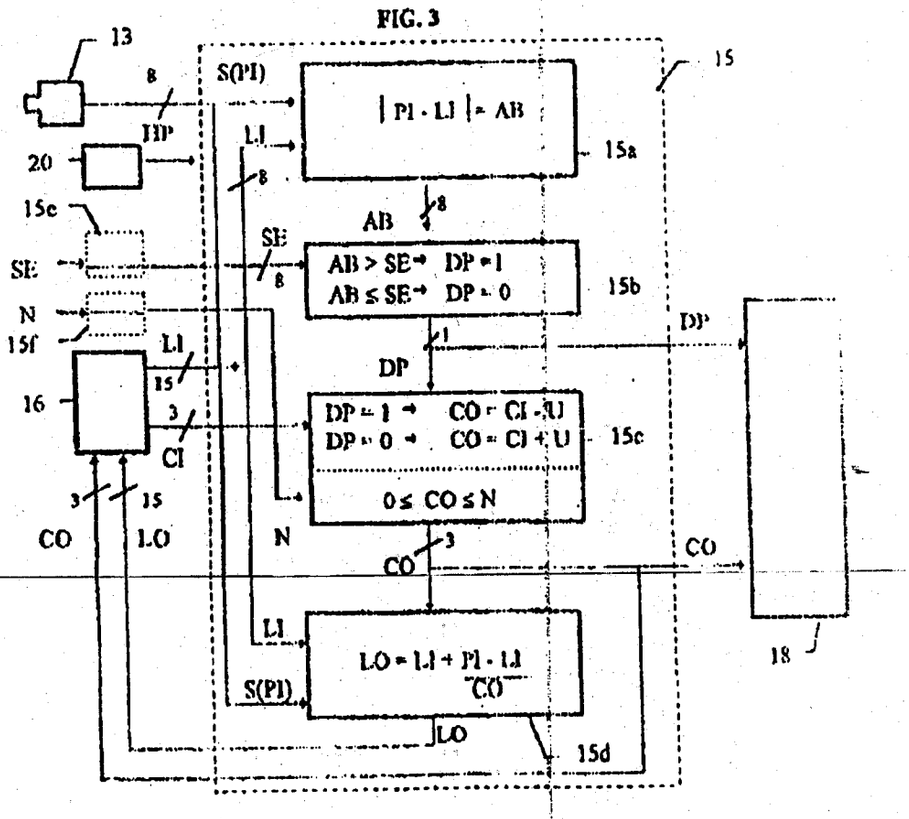
13
8
S(PI)
15
| PI - LI | = AB
15a
HP
20
LI
8
15e
AB
8
SE
SE
8
AB > SE → DP = 1
AB ≤ SE → DP = 0
15b
N
15f
LI
15
DP
1
DP
16
3
CI
DP = 1 → CO = CI - U
DP = 0 → CO = CI + U
15c
0 ≤ CO ≤ N
3
15
CO
LO
N
CO
3
CO
LI
LO = LI + PI - LI
CO
S(PI)
LO
15d
18

3/13

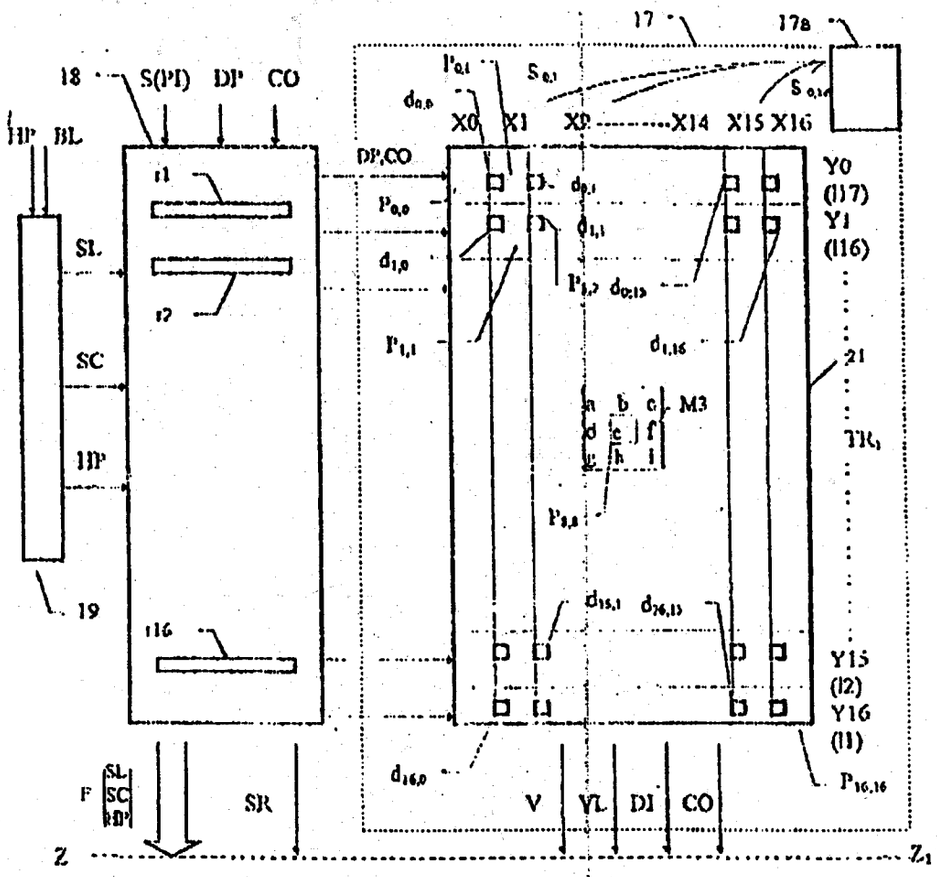

FIG. 4

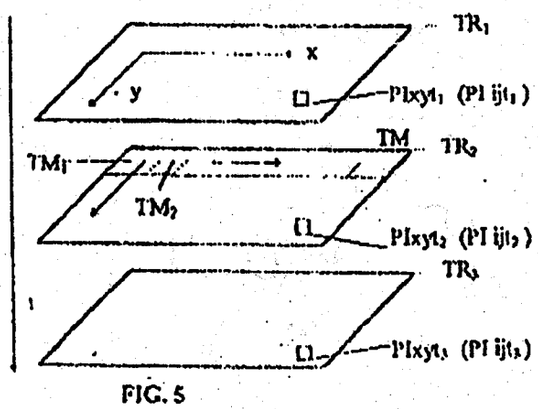

FIG. 5

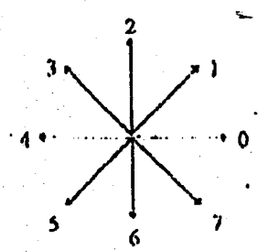

FIG. 6

FIG. 7

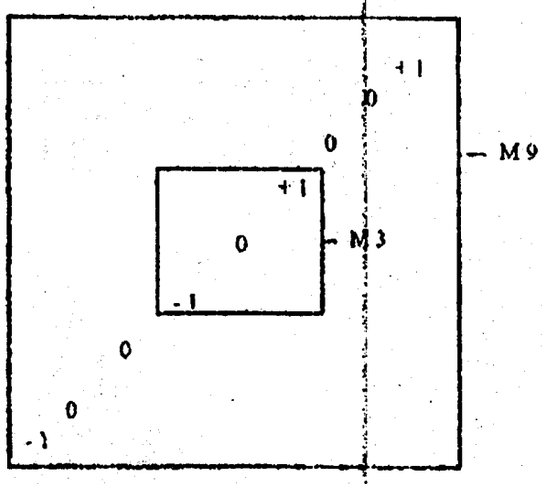

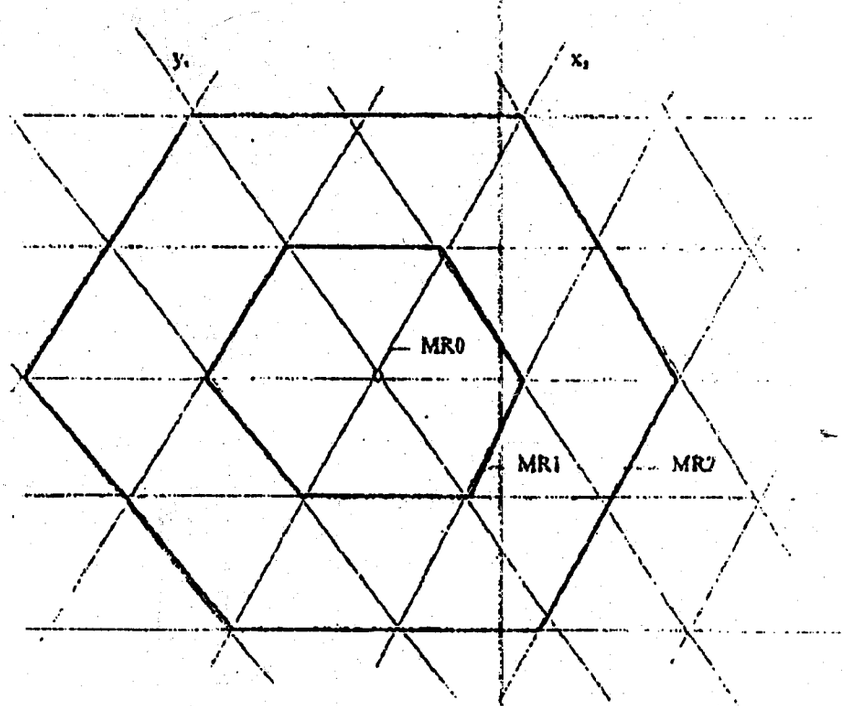

FIG. 8

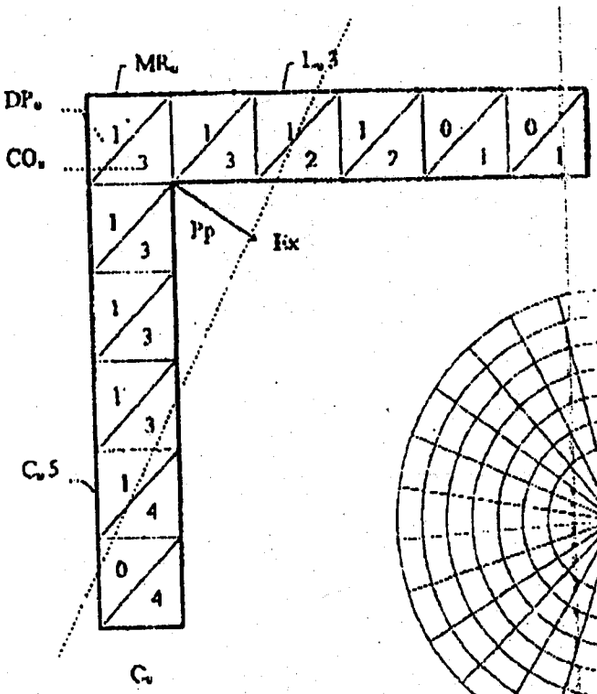

FIG. 9

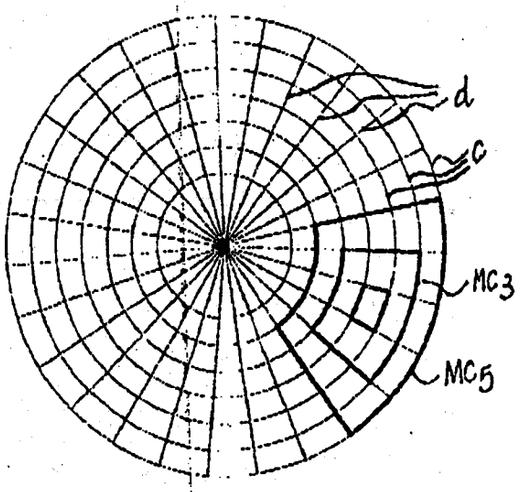

FIG. 9a

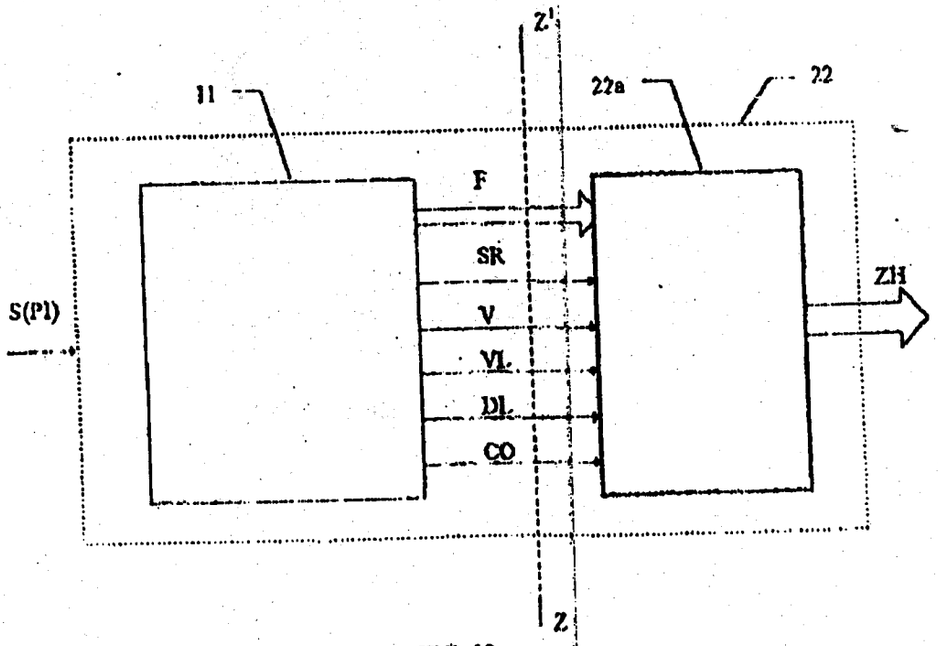

FIG. 10

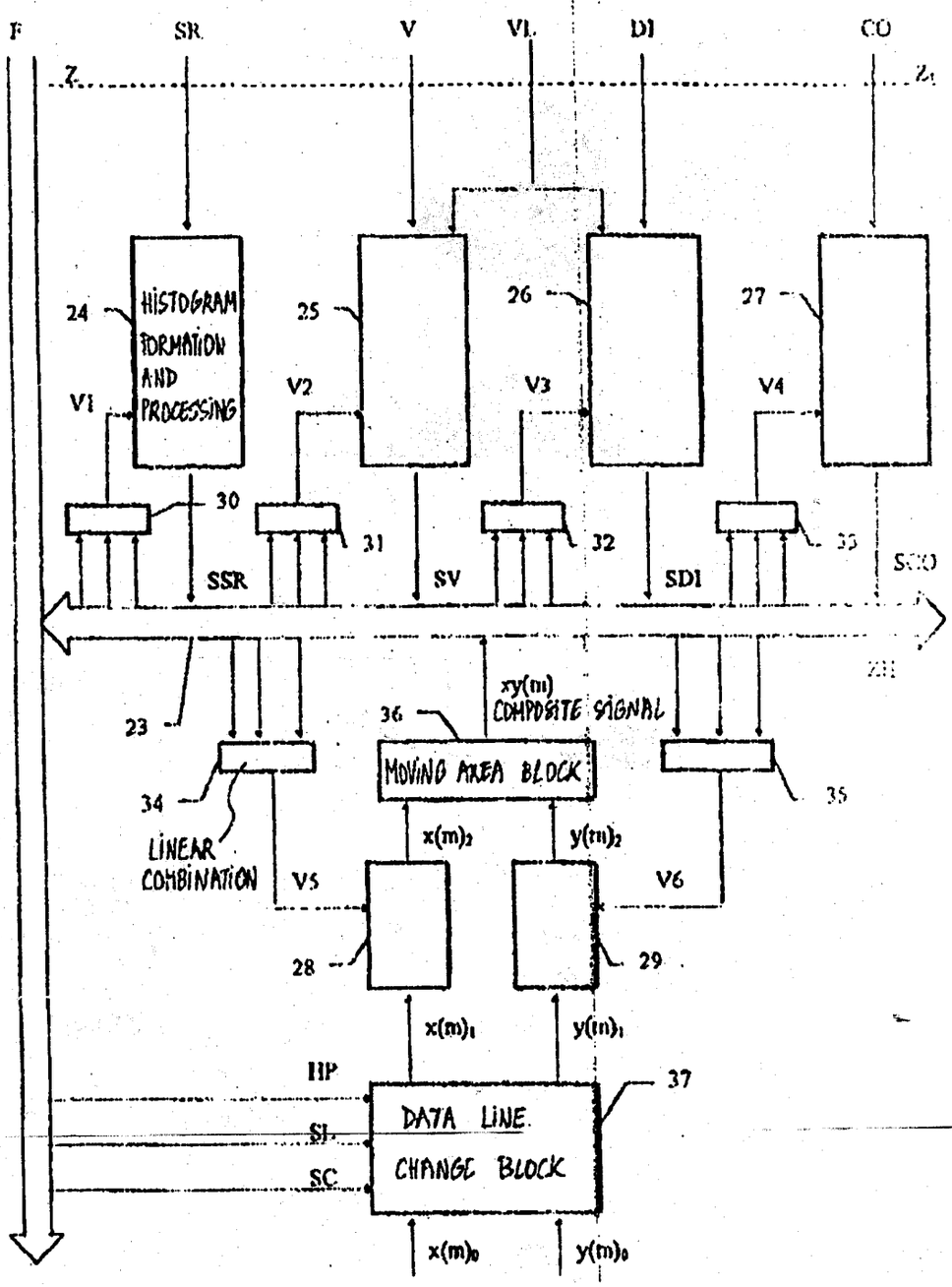
F
SR
V
VI
DI
CO
Z
Z1
24
HISTOGRAM FORMATION AND PROCESSING
25
26
27
V1
V2
V3
V4
30
31
32
33
SSR
SV
SDI
SCO
23
xy(m) COMPOSITE SIGNAL
36
MOVING AREA BLOCK
34
LINEAR COMBINATION
35
x(m)2
y(m)2
V5
V6
28
29
x(m)1
y(m)1
HP
37
SI
DATA LINE CHANGE BLOCK
SC
x(m)0
y(m)0

FIG. 11

7/13

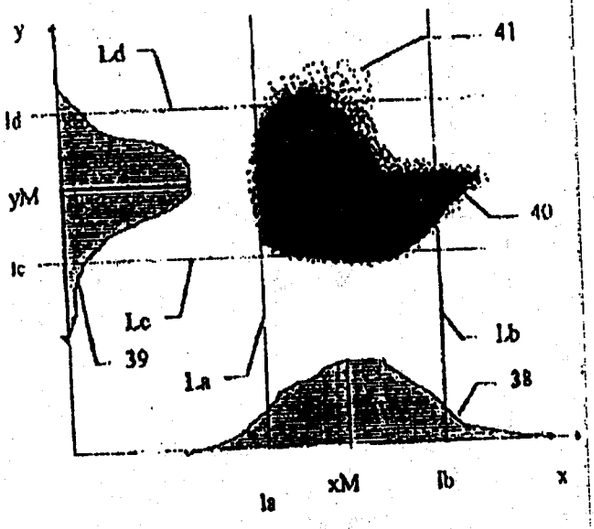

FIG. 12

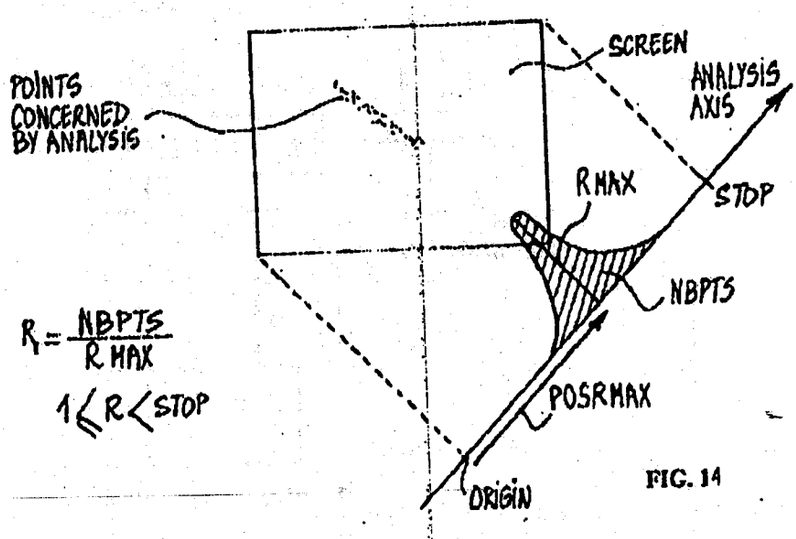

$R = \frac{NBPTS}{R\,MAX}$

$1 \leq R < STOP$

FIG. 14

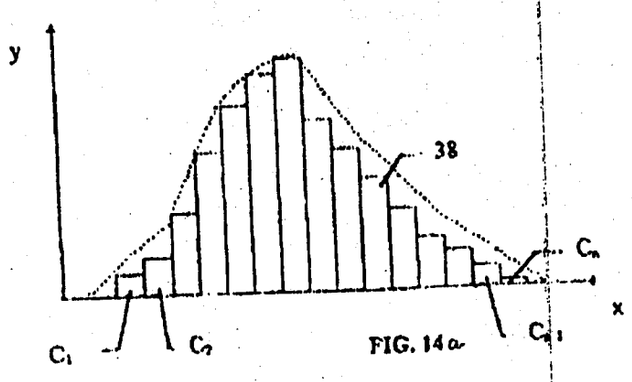

FIG. 14a

PCT/EP98/05383

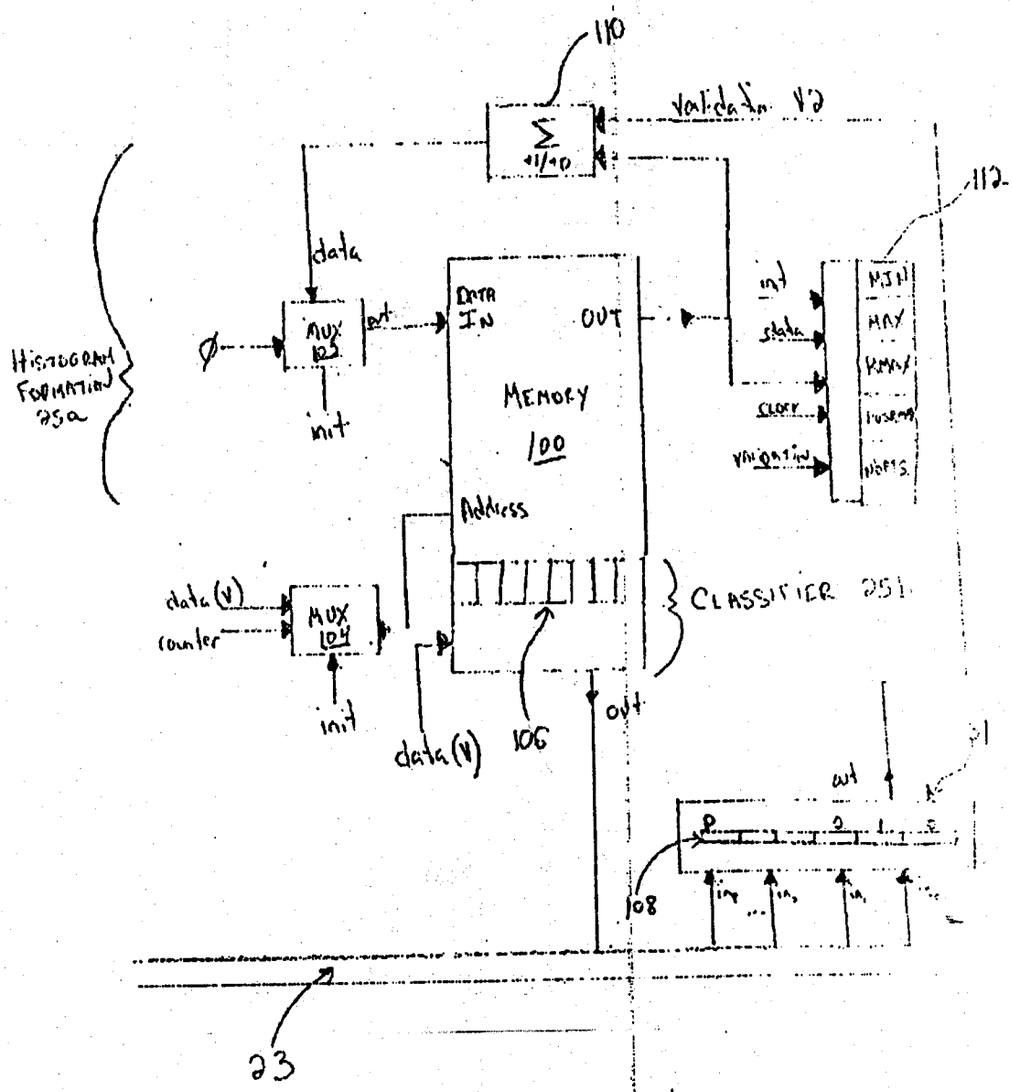

FIG. 13

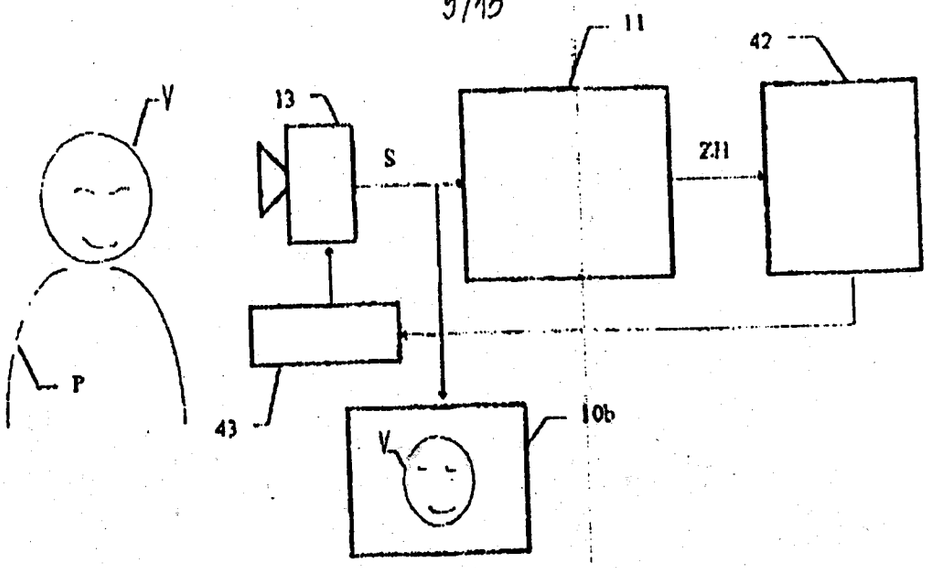

FIG.15

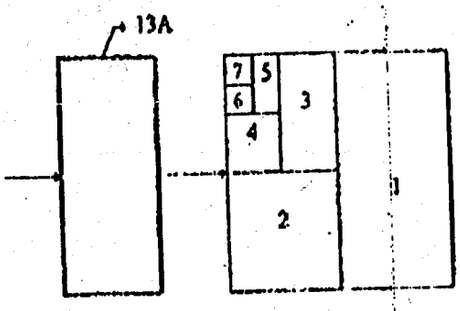

FIG.24

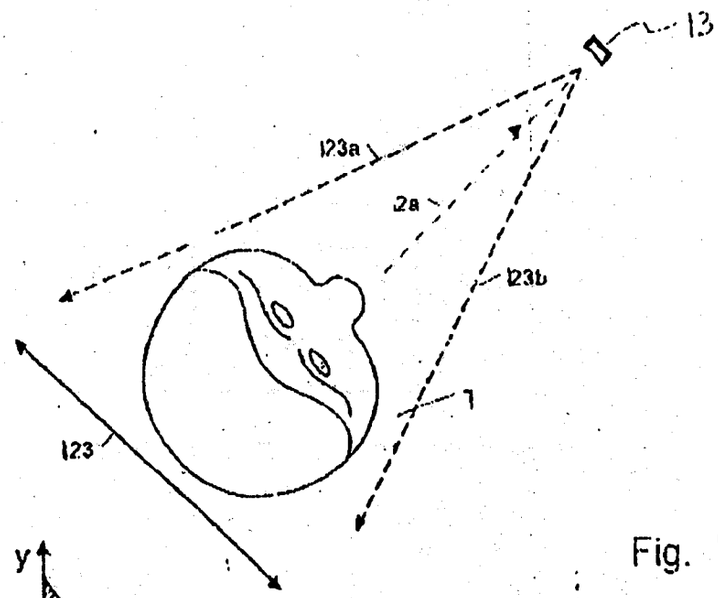
13
123a
2a
123b
1
123

Fig. 16

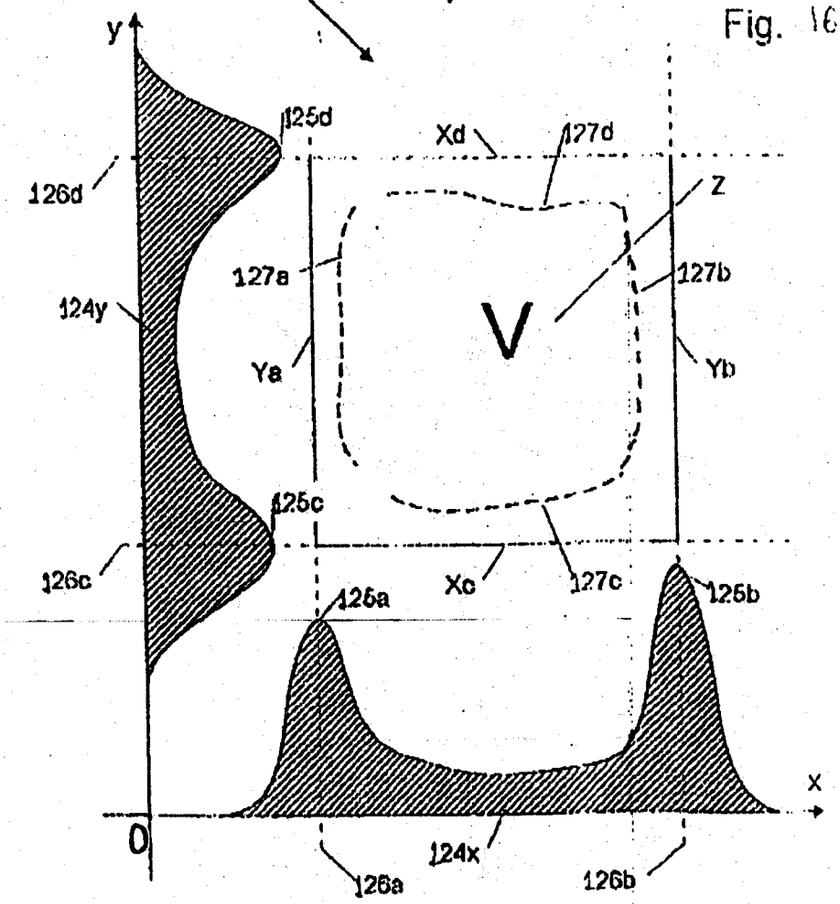
y
125d
Xd
127d
126d
Z
127a
127b
124y
V
Ya
Yb
125c
126c
Xc
127c
125b
126a
X
0
124x
126a
126b

Fig. 17

FIG. 19

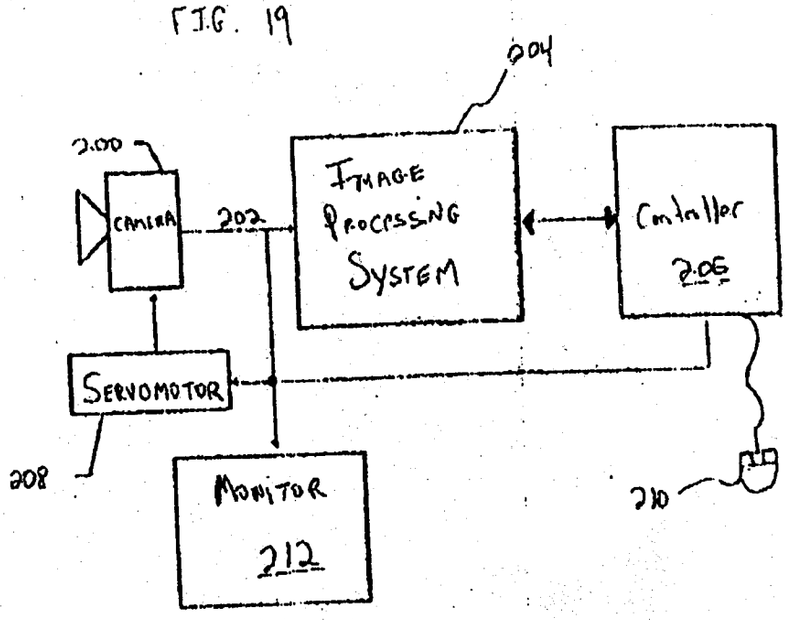
204
200
CAMERA
202
IMAGE PROCESSING SYSTEM
Controller
206
SERVOMOTOR
208
MONITOR
212
210

FIG. 20

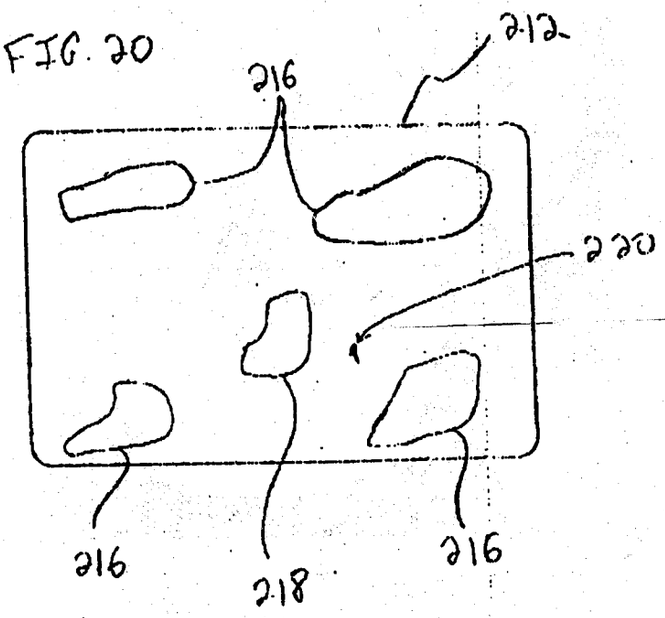
212
216
220
216
218
216

PCT/ 98/05383

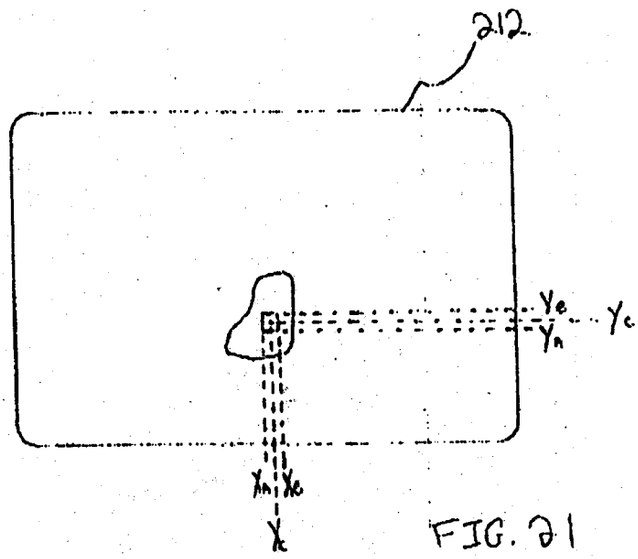

FIG. 21

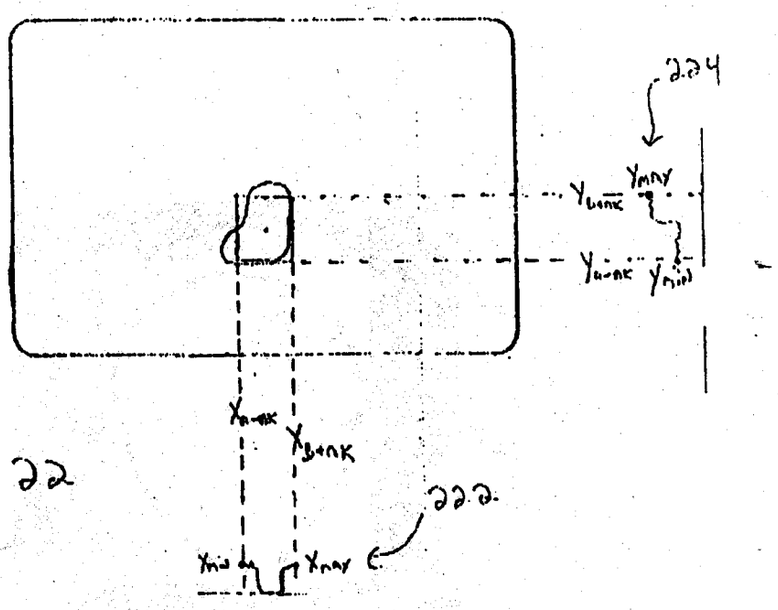

FIG. 22

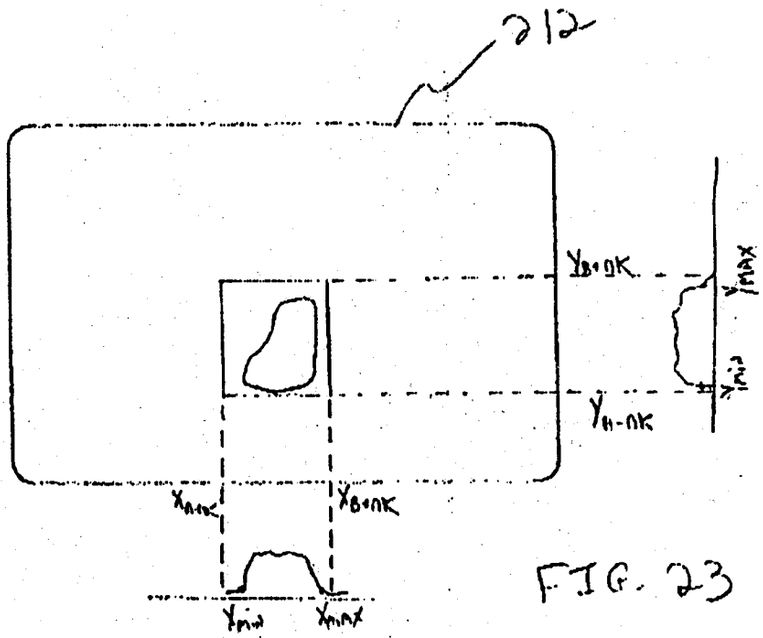

FIG. 23

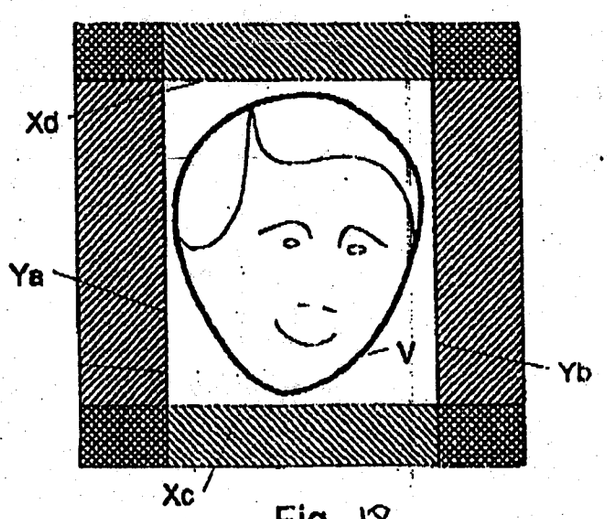

Fig. 18

UNITED STATES PATENT AND TRADEMARK OFFICE

UNITED STATES DEPARTMENT OF COMMERCE
United States Patent and Trademark Office
Address: COMMISSIONER OF PATENTS AND TRADEMARKS
Washington, D.C. 20231
www.uspto.gov

APPLICATION NO.	FILING DATE	FIRST NAMED INVENTOR	ATTORNEY DOCKET NO.	CONFIRMATION NO.
09/600,390	02/09/2001	Patrick Pirim	20046H-00060	7078

7590 10/08/2002

Babak S Sani
Townsend and Townsend and Crew
Two Embarcadero Center 8th Floor
San Francisco, CA 94111

EXAMINER	
MULLEN, THOMAS J	

ART UNIT	PAPER NUMBER
2632	8

DATE MAILED: 10/08/2002

Please find below and/or attached an Office communication concerning this application or proceeding.

SAMSUNG EXHIBIT 1004
Page 310 of 404

Office Action Summary

Application No.	Applicant(s)
09/600,390	Pirim et al
Examiner	**Art Unit**
Thomas J. Mullen, Jr.	2632

-- The MAILING DATE of this communication appears on the cover sheet with the correspondence address --

Period for Reply

A SHORTENED STATUTORY PERIOD FOR REPLY IS SET TO EXPIRE 3 MONTH(S) FROM THE MAILING DATE OF THIS COMMUNICATION.

- Extensions of time may be available under the provisions of 37 CFR 1.136 (a). In no event, however, may a reply be timely filed after SIX (6) MONTHS from the mailing date of this communication.
- If the period for reply specified above is less than thirty (30) days, a reply within the statutory minimum of thirty (30) days will be considered timely.
- If NO period for reply is specified above, the maximum statutory period will apply and will expire SIX (6) MONTHS from the mailing date of this communication.
- Failure to reply within the set or extended period for reply will, by statute, cause the application to become ABANDONED (35 U.S.C. § 133).
- Any reply received by the Office later than three months after the mailing date of this communication, even if timely filed, may reduce any earned patent term adjustment. See 37 CFR 1.704(b).

Status

1) ☐ Responsive to communication(s) filed on _____.

2a) ☐ This action is FINAL. 2b) ☒ This action is non-final.

3) ☐ Since this application is in condition for allowance except for formal matters, prosecution as to the merits is closed in accordance with the practice under *Ex parte Quayle*, 1935 C.D. 11; 453 O.G. 213.

Disposition of Claims

4) ☒ Claim(s) *1-39* is/are pending in the application.

4a) Of the above, claim(s) _____ is/are withdrawn from consideration.

5) ☒ Claim(s) *14-22 and 24-38* is/are allowed.

6) ☒ Claim(s) *1-6, 10-13, 23, and 39* is/are rejected.

7) ☒ Claim(s) *7-9* is/are objected to.

8) ☐ Claims _____ are subject to restriction and/or election requirement.

Application Papers

9) ☐ The specification is objected to by the Examiner.

10) ☐ The drawing(s) filed on _____ is/are a) ☐ accepted or b) ☐ objected to by the Examiner.

Applicant may not request that any objection to the drawing(s) be held in abeyance. See 37 CFR 1.85(a).

11) ☐ The proposed drawing correction filed on _____ is: a) ☐ approved b) ☐ disapproved by the Examiner.

If approved, corrected drawings are required in reply to this Office action.

12) ☐ The oath or declaration is objected to by the Examiner.

Priority under 35 U.S.C. §§ 119 and 120

13) ☒ Acknowledgement is made of a claim for foreign priority under 35 U.S.C. § 119(a)-(d) or (f).

a) ☒ All b) ☐ Some* c) ☐ None of:

1. ☐ Certified copies of the priority documents have been received.
2. ☐ Certified copies of the priority documents have been received in Application No. _____.
3. ☒ Copies of the certified copies of the priority documents have been received in this National Stage application from the International Bureau (PCT Rule 17.2(a)).

*See the attached detailed Office action for a list of the certified copies not received.

14) ☐ Acknowledgement is made of a claim for domestic priority under 35 U.S.C. § 119(e).

a) ☐ The translation of the foreign language provisional application has been received.

15) ☐ Acknowledgement is made of a claim for domestic priority under 35 U.S.C. §§ 120 and/or 121.

Attachment(s)

1) ☒ Notice of References Cited (PTO-892)
2) ☐ Notice of Draftsperson's Patent Drawing Review (PTO-948)
3) ☒ Information Disclosure Statement(s) (PTO-1449) Paper No(s). 3,6
4) ☐ Interview Summary (PTO-413) Paper No(s). _____
5) ☐ Notice of Informal Patent Application (PTO-152)
6) ☐ Other:

1. Receipt is acknowledged of papers submitted under 35 U.S.C. 119(a)-(d), which papers have been placed of record in the file.

2. The drawings are objected to as failing to comply with 37 CFR 1.84(p)(5) because they do not include the following reference sign(s) mentioned in the description: "327d" (see page 39, line 4, and note reference sign "27d" in Fig. 24).

The drawings are objected to as failing to comply with 37 CFR 1.84(p)(5) because they do include the following reference sign(s) not mentioned in the description: "10a" (note the unlabelled box at the right edge of Fig. 1) and "13A" (note the unlabelled, dashed-line box in the upper left corner of Fig. 2, which apparently differs from element "13a" in Fig. 1).

The drawings are objected to because the lowermost figure on sheet 5 of the drawings is not labeled as a "figure", i.e. it appears that should be labeled "Fig. 11".

The drawings are objected to because in Figs. 2 and 11, it appears that "Z' " (denoting one end of a "bus" mentioned on page 20, line 22 of the specification) should be --Z_1--.

The drawings are objected to because in Fig. 2, it appears that "VI" should be --VL-- (see page 19, line 4).

The drawings are objected to because in Fig. 11, it appears that "DL" should be --DI-- (see page 9, line 29).

A proposed drawing correction, corrected drawings, or amendment to the specification to add reference sign(s) in the description (as appropriate), are required in reply to the Office action to avoid abandonment of the application. The objection to the drawings will not be held in abeyance.

3. The lengthy specification has not been checked to the extent necessary to determine the presence of all possible minor errors. Applicant's cooperation is requested in correcting any errors of which applicant may become aware in the specification.

Errors noted by the examiner include:

page 1, line 22, the patent number at the end of the line is incomplete;

page 1a ("amended sheet"), line 1, it appears that the German patent number is incorrect, assuming that this is the same German reference cited by applicant (IDS filed 9/29/00);

page 1a ("amended sheet"), lines 6 and 11-12, it is unclear if the reference numerals 10, 11 and 22 correspond to elements shown in applicant's drawings (wherein one or more of applicant's drawings constitutes admitted prior art), or to elements shown in a particular prior art reference;

page 3, line 20, "a histograms" is vague;

page 9, line 11, it appears that the letter "l" should be inserted before the subscript "2.1";

page 9, line 13, it appears that "al" (3 occurrences) should be --a--;

page 9, line 17, it appears that after "succession" should be inserted --of--;

page 9, at the end of line 24 should be inserted a period;

page 9, line 26, it appears "11" should be --12--;

page 11, line 3, a vertical line should be inserted at the end of the equation (to properly indicate the absolute value function);

page 16, line 27, it appears that "45-" should be --45°--;

page 18, line 15, it appears that "67.5-" should be --67.5°--;

page 23, line 24, "28 an 29" should be --28 and 29--;

page 23, last line, it appears that "it" should be --its--;

page 24, line 24, it appears that "13" should be --14--;

page 24, line 27, "increments" should be --increment--;

page 25, last line, it appears that "16" should be --17--;

page 25, last line, it appears that "53" should be --52--;

page 26, line 1, it appears that after "pixels" should be inserted --53--;

page 26, line 8, it appears that "50" should be --51--;

page 28, line 25, it appears that "longer" should be --lower--;

page 28, line 26, it appears that "limited" should be --limits--;

page 30, line 4, it appears that "any" should be --and--;

page 30, line 28, it appears that "increases" should be --decreases-- (note the equation defining parameter "R", described as having a "high" value in Fig. 15A--page 30, lines 24-26);

page 30, line 29, it appears that "maximum" should be --minimum-- (see above);

page 35, lines 1-2, it appears that "310" (2 occurrences) should be --319--, assuming that "controller" refers to the image processor rather than the sensor per se;

page 39, line 9, it appears that after "driver" should be inserted --is--;

page 40, line 13, it appears that "is" should be --are--; and

page 41, lines 19-20, reference numerals 30a-d should be 330a-d, respectively (see Fig. 27).

4. Claims 3 and 9 are objected to under MPEP 608.01(m) as containing reference characters not enclosed by parentheses; note "V" on line 3 of each claim.

5. Claims 2, 7-13 and 39 are objected to under 37 CFR 1.75(a) for failing to particularly point out and distinctly claim the subject matter which applicant regards as the invention.

Claim 2, line 1, after "identifying" should be inserted --the--.

Claim 7, line 15, after "step" should be inserted --of--.

Claim 9, line 14, after "step" should be inserted --of--.

Claims 11-12, "the step of identifying a facial characteristic..." lacks clear antecedent basis--note the step recited on lines 16-17 of claim 3, "identifying the location of a facial characteristic...".

Claim 39, next-to-last line, the period should be a semi-colon.

6. The following is a quotation of the second paragraph of 35 U.S.C. 112:

> The specification shall conclude with one or more claims particularly pointing out and distinctly claiming the subject matter which the applicant regards as his invention.

7. Claims 1-6, 10-13 and 23 are rejected under 35 U.S.C. 112, second paragraph, as being indefinite for failing to particularly point out and distinctly claim the subject matter which

applicant regards as the invention.

Claim 1, the subject matter on the last 5 lines of the claim--starting with "comprising the steps of"--is indefinite as it is unclear what part of the overall process is being defined (or further defined) by these "steps", i.e. it is unclear how the last two steps recited in the claim are related to the previously recited steps (such as the "selecting pixels" step, which was originally defined on lines 4-5 and further defined on lines 13-14).

Likewise, in claim 3 it is unclear if the "identifying" steps recited on the last 4 lines further define one of the previous steps recited (such as the "selecting pixels" step, which was originally defined on lines 4-5 and further defined on lines 13-15), or merely set forth additional steps of the overall "process" being defined.

Claim 10, line 3, it appears one or more words are missing after "selecting".

Claims 10 and 23, line 4 in each claim, the abbreviations "DP" and "CO" should be spelled out at least once in the claim to identify the intended parameter; more generally, it is unclear what eye characteristics are being defined by items (i) and (ii) in the claim.

8. The following is a quotation of the appropriate paragraphs of 35 U.S.C. 102 that form the basis for the rejections under this section made in this Office action:

> A person shall be entitled to a patent unless -
>
> (b) the invention was patented or described in a printed publication in this or a foreign country or in public use or on sale in this country, more than one year prior to the date of application for patent in the United States.

9. Claim 39 is rejected under 35 U.S.C. 102(b) as being anticipated by Gerhardt.

See in Gerhardt, Figs. 4-8c; col. 9, line 32 to col. 10, line 17; col. 10, lines 35-48; and col. 16, lines 11-26. Gerhardt discloses a process of detecting a "feature" (e.g. pupil) of an eye, by acquiring an image comprising pixels corresponding to the "feature" (Figs. 4, 7a, 8a), selecting pixels of the image corresponding to the "feature" (Gerhardt teaches defining different "sets" of pixel data, of which one set would correspond to a pupil), forming at least one histogram of the selected pixels (Figs. 5, 7b, 8b), and analyzing the histogram over time to identify characteristics

of the "feature" (Figs. 6, 7c, 8c).

10. Claims 14-22 and 24-38 are allowed. Claims 1-13 and 23 would be allowable if rewritten or amended to overcome the rejection(s) under 35 U.S.C. 112, second paragraph, set forth in this Office action.

11. The prior art made of record and not relied upon is considered pertinent to applicant's disclosure.

Okumura and Suzuki disclose eye-image analysis systems for drowsy car drivers, each using a histogram of pixels. Ueno et al appears related to the Conference Proceedings publication cited by applicant. Kumakura et al is the US equivalent to the German publication cited by applicant. Pirim '187 is cited of interest.

12. Any inquiry concerning this communication or earlier communications from the examiner should be directed to Tom Mullen whose telephone number is (703) 305-4382. The examiner can normally be reached on Mon-Thur from 6:30AM to 4:00PM. The examiner can also be reached on alternate Fridays (6:30-3:00).

If attempts to reach the examiner by telephone are unsuccessful, the examiner's supervisor, Jeff Hofsass, can be reached on (703) 305-4717.

Any inquiry of a general nature or relating to the status of this application or proceeding should be directed to the Group receptionist whose telephone number is (703) 305-4700.

Any response to this action should be mailed to:

Commissioner of Patents and Trademarks
Washington, D.C. 20231

or faxed to:

(703) 872-9314

Hand-delivered responses should be brought to Crystal Park II, 2121 Crystal Drive, Arlington. VA., Sixth Floor (Receptionist).

T. Mullen
October 2, 2002

Thomas J. Mullen, Jr.
Primary Examiner
Art Unit 2632

Notice of References Cited	Application/Control No. 09/600,390	Applicant(s)/Patent Under Reexam Pirim et al	
	Examiner Thomas J. Mullen, Jr.	Art Unit 2632	Page 1 of 1

U.S. PATENT DOCUMENTS

		Document Number Country Code-Number-Kind Code	Date MM-YYYY[1]	Name	Classification[2]	
	A	5,481,622	1/1996	Gerhardt et al	382	103
	B	5,878,156	3/1999	Okumura	382	118
	C	5,859,921	1/1999	Suzuki	382	118
	D	5,218,387	6/1993	Ueno et al	351	210
	E	5,786,765	7/1998	Kumakura et al	340	576
	F	6,304,187 B1	10/2001	Pirim	340	576
	G					
	H					
	I					
	J					
	K					
	L					
	M					

FOREIGN PATENT DOCUMENTS

		Document Number Country Code-Number-Kind Code	Date MM-YYYY[1]	Country	Name	Classification[2]	
	N						
	O						
	P						
	Q						
	R						
	S						
	T						

NON-PATENT DOCUMENTS

		Include, as applicable: Author, Title, Date, Publisher, Edition or Volume, Pertinent Pages
	U	
	V	
	W	
	X	

* A copy of this reference is not being furnished with this Office action. See MPEP § 707.05(a). [1] Dates in MM-YYYY format are publication dates. [2] Classifications may be U.S. or foreign.

	Type	L #	Hits	Search Text	DBs	Time Stamp	Comments
1	BRS	L1	3418	eye$1 same (image$1 imaging) same pixel$1	USPAT; US-PGPUB	2002/10/02 13:35	
2	BRS	L2	271	1 and histogram$1	USPAT; US-PGPUB	2002/10/02 12:33	
3	BRS	L4	15	2 and (sleep$5 asleep drows$5)	USPAT; US-PGPUB	2002/10/02 13:21	
4	BRS	L5	39	3 not 4	USPAT; US-PGPUB	2002/10/02 12:35	
5	BRS	L6	2	3 and 4	USPAT; US-PGPUB	2002/10/02 12:40	
6	BRS	L7	12	3 and (iris pupil cornea)	USPAT; US-PGPUB	2002/10/02 13:01	
7	BRS	L8	5	("5218387" | "5432862" | "5481622" | "5859921" | "5867610").PN.	USPAT	2002/10/02 13:00	
8	BRS	L9	8	3 same (iris pupil cornea)	USPAT; US-PGPUB	2002/10/02 13:37	
9	BRS	L3	41	1 same histogram$1	USPAT; US-PGPUB	2002/10/02 13:19	
10	BRS	L10	41	1 same histogram$1	USPAT; US-PGPUB	2002/10/02 13:19	
11	BRS	L12	397	11 not 10	USPAT; US-PGPUB	2002/10/02 13:22	
12	BRS	L13	2	11 and 10	USPAT; US-PGPUB	2002/10/02 13:22	
13	IS&R	L11	399	(340/575-576).CCLS.	USPAT; US-PGPUB	2002/10/02 13:25	
14	BRS	L14	11	1 and 11	USPAT; US-PGPUB	2002/10/02 13:34	
15	BRS	L15	444	anthropomorphic	USPAT; US-PGPUB	2002/10/02 13:35	
16	BRS	L16	0	11 and 15	USPAT; US-PGPUB	2002/10/02 13:35	
17	BRS	L17	0	10 and 15	USPAT; US-PGPUB	2002/10/02 13:35	
18	BRS	L19	0	15 and 18	USPAT; US-PGPUB	2002/10/02 13:36	
19	BRS	L20	0	8 and 15	USPAT; US-PGPUB	2002/10/02 13:36	
20	BRS	L21	6	3 same (iris pupil cornea)	USPAT	2002/10/02 13:56	
21	BRS	L22	6	3 same (iris pupil cornea)	USPAT	2002/10/02 13:56	
22	BRS	L18	41	eye$1 same (image$1 imaging) same pixel$1 same histogram$1	USPAT; US-PGPUB	2002/10/02 14:09	

OIPE
FEB 10 2003
PATENT & TRADEMARK OFFICE

PTO/SB/22 (10-00)
Approved for use through 10/31/2002. OMB 0651-0031
U.S. Patent and Trademark Office: U.S. DEPARTMENT OF COMMERCE
Under the Paperwork Reduction Act of 1995, no persons are required to respond to a collection of information unless it displays a valid OMB control number.

#9
3-4-03

PETITION FOR EXTENSION OF TIME UNDER 37 CFR 1.136(a)

Docket Number (Optional): 20046H-000600US

In re Application of PATRICK PIRIM, et al.

Application Number 09/600,390 | Filed February 9, 2001

For METHOD AND APPARATUS FOR DETECTION OF DROWSINESS

Group Art Unit	Examiner
2632	Thomas J. Mullen

RECEIVED
FEB 13 2003
Technology Center 2600

This is a request under the provisions of 37 CFR 1.136(a) to extend the period for filing a reply in the above identified application.

The requested extension and appropriate non-small-entity fee are as follows (check time period desired):

☒	One month (37 CFR 1.17(a)(1))	$110
☐	Two months (37 CFR 1.17(a)(2))	$
☐	Three months (37 CFR 1.17(a)(3))	$
☐	Four months (37 CFR 1.17(a)(4))	$
☐	Five months (37 CFR 1.17(a)(5))	$

☐ Applicant claims small entity status. See 37 CFR 1.27. Therefore, the fee amount shown above is reduced by one-half, and the resulting fee is: $.

☐ A check in the amount of the fee is enclosed.

☐ Payment by credit card. Form PTO-2038 is attached.

☐ The Commissioner has already been authorized to charge fees in this application to a Deposit Account.

☒ The Commissioner is hereby authorized to charge any fees which may be required, or credit any overpayment, to Deposit Account Number 20-1430.

I have enclosed a duplicate copy of this sheet.

I am the ☐ applicant/inventor.

☐ assignee of record of the entire interest. See 37 CFR 3.71

Statement under 37 CFR 3.73(b) is enclosed. (Form PTO/SB/96).

☐ attorney or agent of record.

☒ attorney or agent under 37 CFR 1.34(a).

Registration number if acting under 37 CFR 1.34(a). 41,797 .

WARNING: Information on this form may become public. Credit card information should not be included on this form. Provide credit card information and authorization on PTO-2038.

2/5/03
Date

Signature

Gerald T. Gray, Reg. No. 41,797
Typed or printed name

NOTE: Signatures of all the inventors or assignees of record of the entire interest or their representative(s) are required. Submit multiple forms if more than one signature is required, see below*.

☐ *Total of ____ forms are submitted.

Burden Hour Statement: This form is estimated to take 0.1 hours to complete. Time will vary depending upon the needs of the individual case. Any comments on the amount of time you are required to complete this form should be sent to the Chief Information Officer, U.S. Patent and Trademark Office, Washington, DC 20231. DO NOT SEND FEES OR COMPLETED FORMS TO THIS ADDRESS. SEND TO: Assistant Commissioner for Patents, Washington, DC 20231.

02/11/2003 WASFAW1 00000011 201430 09600390
01 FC:1251 110.00 CH

OIPE JC41
FEB 10 2003
PATENT & TRADEMARK OFFICE

2632

Please type a plus sign (+) inside this box → [+]

PTO/SB/21 (08-00)
Approved for use through 10/31/2002. OMB 0651-0031
U.S. Patent and Trademark Office: U.S. DEPARTMENT OF COMMERCE
Under the Paperwork Reduction Act of 1995, no persons are required to respond to a collection of information unless it displays a valid OMB control number.

TRANSMITTAL FORM

(to be used for all correspondence after initial filing)

Total Number of Pages in This Submission	65

Application Number	09/600,390
Filing Date	February 9, 2001
First Named Inventor	Pirim, Patrick
Group Art Unit	2632
Examiner Name	Thomas J. Mullen
Attorney Docket Number	20046H-000600US

RECEIVED
FEB 13 2003
Technology Center 2600

ENCLOSURES *(check all that apply)*

- ☐ Fee Transmittal Form
  - ☐ Fee Attached
- ☒ Amendment / Reply
  - ☐ After Final
  - ☐ Affidavits/declaration(s)
- ☒ Extension of Time Request
- ☐ Express Abandonment Request
- ☐ Information Disclosure Statement
- ☐ Certified Copy of Priority Document(s)
- ☐ Response to Missing Parts/ Incomplete Application
  - ☐ Response to Missing Parts under 37 CFR 1.52 or 1.53
- ☐ Assignment Papers *(for an Application)*
- ☒ 6 sheets Substitute Redlined Drawing(s)
- ☐ Licensing-related Papers
- ☐ Petition
- ☐ Petition to Convert to a Provisional Application
- ☐ Power of Attorney, Revocation Change of Correspondence Address
- ☐ Terminal Disclaimer
- ☐ Request for Refund
- ☐ CD, Number of CD(s)
- ☐ After Allowance Communication to Group
- ☐ Appeal Communication to Board of Appeals and Interferences
- ☐ Appeal Communication to Group *(Appeal Notice, Brief, Reply Brief)*
- ☐ Proprietary Information
- ☐ Status Letter
- ☒ Other Enclosure(s) *(please identify below)*:

  Return Postcard

Remarks: The Commissioner is authorized to charge any additional fees to Deposit Account 20-1430.

SIGNATURE OF APPLICANT, ATTORNEY, OR AGENT

Firm and Individual name	Townsend and Townsend and Crew LLP Gerald T. Gray Reg. No. 41,797
Signature	Gerald T. Gray
Date	2/5/03

CERTIFICATE OF MAILING

I hereby certify that this correspondence is being deposited with the United States Postal Service with sufficient postage as first class mail in an envelope addressed to: Commissioner for Patents, Washington, D.C. 20231 on this date: 02/05/03

Typed or printed name	Jennifer K. Hardin		
Signature	Jennifer K. Hardin	Date	02/05/03

Burden Hour Statement: This form is estimated to take 0.2 hours to complete. Time will vary depending upon the needs of the individual case. Any comments on the amount of time you are required to complete this form should be send to the Chief Information Officer, U.S. Patent and Trademark Office, Washington, DC 20231. DO NOT SEND FEES OR COMPLETED FORMS TO THIS ADDRESS. SEND TO: Assistant Commissioner for Patents, Washington, DC 20231.

WC 9052840 v1

OIPE JC41
FEB 10 2003
PATENT & TRADEMARK OFFICE

RECEIVED
FEB 13 2003
Technology Center 2600

10/a

PATENT

Attorney Docket No.: 20046H-000600US
Client Ref. No.: 048J US 3714

3-4-03

I hereby certify that this correspondence is being deposited with the United States Postal Service as first class mail in an envelope addressed to:

Assistant Commissioner for Patents
Washington, D.C. 20231

On 02/05/03

TOWNSEND and TOWNSEND and CREW LLP

By: Jennifer K. Hardin

IN THE UNITED STATES PATENT AND TRADEMARK OFFICE

In re application of:	Examiner: Thomas J. Mullen
PATRICK PIRIM, et al.	Art Unit: 2632
Application No.: 09/600,390	AMENDMENT
Filed: February 9, 2001	
For: METHOD AND APPARATUS FOR DETECTION OF DROWSINESS	

Assistant Commissioner for Patents
Washington, D.C. 20231

Sir:

In response to the Office Action mailed October 8, 2002, please amend the above-identified application as follows:

IN THE SPECIFICATION:

Please amend the indicated paragraphs to read as follows:

Paragraph beginning on page 1, line 21:

Numerous devices have been proposed to detect drowsiness of drivers. Such devices are shown, for example, in U.S. Patent Nos. 5,841,354; 5,813,993; 5,689,241; 5,684,461; 5,682,144; 5,469,143; 5,402,109; 5,353,013; 5,195,606; 4,928,090; 4,555,697; 4,485,375; and 4,259,665. In general, these devices fall into three categories: i) devices that detect movement of the head of the driver, e.g., tilting; ii) devices that

a1 cont.

detect a physiological change in the driver, e.g., altered heartbeat or breathing, and iii) devices that detect a physical result of the driver falling asleep, e.g., a reduced grip on the steering wheel. None of these devices is believed to have met with commercial success.--

Paragraph beginning on page 2, line 1:

The German patent application DE 19715519 and the corresponding French patent application FR-2.747.346 disclose an apparatus and a process of evaluation of the drowsiness level of a driver using a video camera placed near the feet of the driver and a processing unit for processing the camera image with software detecting the blinks of the eyes to determine the time gap between the beginning and the end of the blink. More particularly, a unit of the processor realizes

- a memorization of the video image and its treatment, so as to determine an area comprising the driver's eyes,
- the detection of the time gap between the closing of the driver eyelids and their full opening and
- a treatment in a memo and a processor in combination with the unit to calculate a ratio of slow blink apparition.

Paragraph beginning on page 2, line 23:

Commonly-owned PCT Application Serial Nos. PCT/FR97/01354 and PCT/EP98/05383 disclose a generic image processing system that operates to localize the driver, or a facial characteristic of the driver, such as the driver's nostrils, and then identify the sub-area of the image using an anthropomorphic model. The head of the driver may be identified by selecting pixels of the image having characteristics corresponding to edges of the head of the driver. Histograms of the selected pixels of the edges of the driver's head are projected onto orthogonal axes. These histograms are then analyzed to identify the edges of the driver's head. .

Paragraph beginning on page 3, line 7:

The facial characteristic of the driver may be identified by selecting pixels of the image having characteristics corresponding to the facial characteristic. Histograms of the selected pixels of the facial characteristic are projected onto orthogonal axes. These histograms are then analyzed to identify the facial characteristic. If desired, the step of identifying the facial characteristic in the image involves searching sub-images of the image until the facial characteristic is found. In the case in which the facial characteristic is the nostrils of the driver, a histogram is formed of pixels having low luminance levels to detect the nostrils. To confirm detection of the nostrils, the histograms of the nostril pixels may be analyzed to determine whether the spacing between the nostrils is within a desired range and whether the dimensions of the nostrils fall within a desired range. In order to confirm the identification of the facial characteristic, an anthropomorphic model and the location of the facial characteristic are used to select a sub-area of the image containing a second facial characteristic. Pixels of the image having characteristics corresponding to the second facial characteristic are selected and histograms of the selected pixels of the second facial characteristic are analyzed to confirm the identification of the first facial characteristic.

a4

Paragraph beginning on page 3, line 23:

In order to determine openings and closings of the eyes of the driver, the step of selecting pixels of the image having characteristics corresponding to characteristics of an eye of the driver involves selecting pixels having low luminance levels corresponding to shadowing of the eye. In this embodiment, the step of analyzing the histogram over time to identify each opening and closing of the eye involves analyzing the shape of the eye shadowing to determine openings and closings of the eye. The histograms of shadowed pixels are preferably projected onto orthogonal axes, and the step of analyzing the shape of the eye shadowing involves analyzing the width and height of the shadowing.

a5

Paragraph beginning on page 4, line 1:

An alternative method of determining openings and closings of the eyes of the driver involves selecting pixels of the image having characteristics of movement corresponding to blinking. In this embodiment, the step of analyzing the histogram over time to identify each opening and closing of the eye involves analyzing the number of pixels in movement corresponding to blinking over time. The characteristics of a blinking eye are preferably selected from the group consisting of i) DP=1, ii) CO indicative of a blinking eyelid, iii) velocity indicative of a blinking eyelid, and iv) up and down movement indicative of a blinking eyelid.

a6

Paragraph beginning on page 4, line 9:

An apparatus for detecting a driver falling asleep includes a sensor for acquiring an image of the face of the driver, a controller, and a histogram formation unit for forming a histogram on pixels having selected characteristics. The controller controls the histogram formation unit to select pixels of the image having characteristics corresponding to characteristics of at least one eye of the driver and to form a histogram of the selected pixels. The controller analyzes the histogram over time to identifies each opening and closing of the eye, and determines from the opening and closing information on the eye, characteristics indicative of the driver falling asleep.

a7

Paragraph beginning on page 8, line 24:

The apparatus of the invention is similar to that described in the aforementioned PCT Application Serial Nos. PCT/FR97/01354 and PCT/EP98/05383, which will be described herein for purposes of clarity. Referring to Figs. 1 and 11, the generic image processing system 22 includes a spatial and temporal processing unit 11 in combination with a histogram formation unit 22a. Spatial and temporal processing unit 11 includes an input 12 that receives a digital video signal S originating from a video camera or other imaging device 13 which monitors a scene 13a. Imaging device 13 is preferably a conventional CMOS-type CCD camera, which for purposes of the presently-described invention is mounted on a vehicle facing the driver. It will be appreciated that

a8 cont.

when used in non-vehicular applications, the camera may be mounted in any desired fashion to detect the specific criteria of interest. It is also foreseen that any other appropriate sensor, e.g., ultrasound, IR, Radar, etc., may be used as the imaging device. Imaging device 13 may have a direct digital output, or an analog output that is converted by an A/D converter into digital signal S. Imaging device 13 may also be integral with generic image processing system 22, if desired, for example as represented by element 13A.

Paragraph beginning on page 9, line 9:

While signal S may be a progressive signal, it is preferably composed of a succession of pairs of interlaced frames, TR_1 and TR'_1 and TR_2 and TR'_2, each consisting of a succession of horizontal scanned lines, e.g., $l_{1.1}$, $l_{1.2}$,...,$l_{1.17}$ in TR_1, and $l_{2.1}$, TR_2. Each line consists of a succession of pixels or image points PI, e.g., $a_{1.1}$, $a_{1.2}$ and $a_{1.3}$ for line $l_{1.1}$; $a_{17.1}$ and $al_{17.2}$ for line $l_{1.17}$; $a_{1.1}$ and $a_{1.2}$ for line $l_{2.1}$. Signal S(PI) represents signal S composed of pixels PI.

Paragraph beginning on page 9, line 15:

S(PI) includes a frame synchronization signal (ST) at the beginning of each frame, a line synchronization signal (SL) at the beginning of each line, and a blanking signal (BL). Thus, S(PI) includes a succession of frames, which are representative of the time domain, and within each frame, a series of lines and pixels, which are representative of the spatial domain.

Paragraph beginning on page 9, line 20:

In the time domain, "successive frames" shall refer to successive frames of the same type (i.e., odd frames such as TR_1 or even frames such as TR'_1), and "successive pixels in the same position" shall denote successive values of the pixels (PI) in the same location in successive frames of the same type, e.g., $a_{1.1}$ of $l_{1.1}$ in frame TR_1 and $a_{1.1}$ of $l_{1.1}$ in the next corresponding frame TR_2.

Paragraph beginning on page 9, line 25:

Spatial and temporal processing unit 11 generates outputs ZH and SR 14 to a data bus 23 (Fig. 12), which are preferably digital signals. Complex signal ZH comprises a number of output signals generated by the system, preferably including signals indicating the existence and localization of an area or object in motion, and the speed V and the oriented direction of displacement DI of each pixel of the image. Also preferably output from the system is input digital video signal S, which is delayed (SR) to make it synchronous with the output ZH for the frame, taking into account the calculation time for the data in composite signal ZH (one frame). The delayed signal SR is used to display the image received by camera 13 on a monitor or television screen 10, which may also be used to display the information contained in composite signal ZH. Composite signal ZH may also be transmitted to a separate processing assembly 10a in which further processing of the signal may be accomplished.

Q12

Paragraph beginning on page 10, line 25:

Referring to Fig. 3, temporal processing unit 15 includes a first block 15a which receives the pixels PI of input video signal S. For each pixel PI, the temporal processing unit 15 retrieves from memory 16 a smoothed value LI of this pixel from the immediately preceding corresponding frame, which was calculated by temporal processing unit 15 during processing of the immediately prior frame and stored in memory 16 as LO. Temporal processing unit 15 calculates the absolute value AB of the difference between each pixel value PI and LI for the same pixel position (for example $a_{1.1}$, of $1_{1.1}$ in TR_1 and of $1_{1.1}$ in TR_2:

$$AB = |PI-LI|$$

Q13

Paragraph beginning on page 14, line 9:

Spatial processing unit 17 distributes into $l \times m$ matrix 21 the incoming flows of Dp_{ijt} and CO_{ijt} from temporal processing unit 15. It will be appreciated that only a subset of all DPijt, and CO_{ijt} values will be included in matrix 21, since the frame is

Q14 cont.

a14 cont.

much larger, having L lines and M pixels per row (e.g., 312.5 lines and 250-800 pixels), depending upon the TV standard used.

Paragraph beginning on page 16, line 24:

a15

In matrix M3, positions a, b, c, d, f, g, h, i around the central pixel e correspond to eight oriented directions relative to the central pixel. The eight directions may be identified using the Freeman code illustrated in Fig. 6, the directions being coded 0 to 7 starting from the x axis, in steps of 45. In the Freeman code, the eight possible oriented directions, may be represented by a 3-bit number since $2^3 = 8$.

Paragraph beginning on page 18, line 6:

a16

Two tests are preferably performed on the results to remove uncertainties. The first test chooses the strongest variation, in other words the highest time constant, if there are variations of CO along several directions in one of the nested matrices. The second test arbitrarily chooses one of two (or more) directions along which the variation of CO is identical, for example by choosing the smallest value of the Freeman code, in the instance when identical lines of motion are directed in a single matrix in different directions. This usually arises when the actual direction of displacement is approximately between two successive coded directions in the Freeman code, for example between directions 1 and 2 corresponding to an (oriented) direction that can be denoted 1.5 (Fig. 6) of about 67.5. with the x axis direction (direction 0 in the Freeman code).

Paragraph beginning on page 20, line 6:

a17 cont.

Fig. 9 shows the case in which DP = 1 and CO_u changes value by one unit in the two specific positions L_{u3} and C_{u5} and indicates the corresponding slope P_P. In all cases, the displacement speed is a function of the position in which CO changes value by one unit. If CO changes by one unit in L_u or C_u only, it corresponds to the value of the CO variation position. If CO changes by one unit in a position in L_u and in a position in

A17 Cont.

C_u, the speed is proportional to the distance between MR_u and E_u (intersection of the line perpendicular to C_u - L_u passing through MR_u).

Paragraph beginning on page 23, line 1:

Classifier 25b enables only data having selected classification criteria to be considered further, meaning to possibly be included in the histograms formed by histogram formation blocks 24-29. For example, with respect , to speed, which is preferably a value in the range of 0-7, classifier 25b may be set to consider only data within a particular speed category or categories, e.g., speed 1, speeds 3 or 5, speed 3-6, etc. Classifier 25b includes a register 106 that enables the classification criteria to be set by the user, or by a separate computer program. By way of example, register 106 will include, in the case of speed, eight registers numbered 0-7. By setting a register to "1", e.g., register number 2, only data that meets the criteria of the selected class, e.g., speed 2, will result in a classification output of "1". Expressed mathematically, for any given register in which R(k) = b, where k is the register number and b is the boolean value stored in the register:

A18

$$\text{Output} = R(\text{data}(V))$$

So for a data point V of magnitude 2, the output of classifier 25b will be "1" only if R(2)=1. The classifier associated with histogram formation block 24 preferably has 256 registers, one register for each possible luminance value of the image. The classifier associated with histogram formation block 26 preferably has 8 registers, one register for each possible direction value. The classifier associated with histogram formation block 27 preferably has 8 registers, one register for each possible value of CO. The classifier associated with histogram formation block 28 preferably has the same number of registers as the number of pixels per line. Finally, the classifier associated with histogram formation block 29 preferably has the same number of registers as the number of fines per frame. The output of each classifier is communicated to each of the validation blocks 30-35 via bus 23, in the case of histogram formation blocks 28 and 29, through combination unit 36, which will be discussed further below.

Paragraph beginning on page 23, line 26:

Validation units 30-35 receive the classification information in parallel from all classification units in histogram formation blocks 24 - 29. Each validation unit generates a validation signal which is communicated to its associated histogram formation block 24 - 29. The validation signal determines, for each incoming pixel, whether the histogram formation block will utilize that pixel in forming its histogram. Referring again to Fig. 14, which shows histogram formation block 25, validation unit 31 includes a register block 108 having a register associated with each histogram formation block, or more generally, a register associated with each data domain that the system is capable of processing, in this case, luminance, speed, direction, CO, and x and y position. The content of each register in register block 108 is a binary value that may be set by a user or by a computer controller. Each validation unit receive via bus 23 the output of each of the classifiers, in this case numbered 0 ... p, keeping in mind that for any data domain, e.g., speed, the output of the classifier for that data domain will only be "1" if the particular data point being considered is in the class of the registers set to "1" in the classifier for that data domain. The validation signal from each validation unit will only be "1" if for each register in the validation unit that is set to "1", an input of "1" is received from the classifier for the domain of that register. This may be expressed as follows:

a19 cont.

$$out = (\overline{in}_o + Reg_o).(\overline{in}_1 + Reg_1)...(\overline{in}_n + Reg_n)(in_o + in_1 + ...in_n)$$

where Reg_o is the register in the validation unit associated with input in_o. Thus, using the classifiers in combination with validation units 30 - 35, the system may select for processing only data points in any selected classes within any selected domains. For example, the system may be used to detect only data points having speed 2, direction 4, and luminance 125 by setting each of the following registers to "1 ": the registers in the validation units for speed, direction, and luminance, register 2 in the speed classifier, register 4 in the direction classifier, and register 125 in the luminance classifier. In order

A19 cont'd

to form those pixels into a block, the registers in the validation units for the x and y directions would be set to "1" as well.

Paragraph beginning on page 24, line 24:

Referring again to Fig. 14, validation signal V2 is updated on a pixel-by-pixel basis. If, for a particular pixel, validation signal V2 is "1", adder 110 increments the output of memory 100 by one. If, for a particular pixel, validation signal V2 is "0", adder 100 does not increment the output of memory. In any case, the output of adder 100 is stored in memory 100 at the address corresponding to the pixel being considered. For example, assuming that memory 100 is used to form a histogram of speed, which may be categorized as speeds 0-7, and where memory 100 will include 0-7 corresponding memory locations, if a pixel with speed 6 is received, the address input to multiplexor 104 through the data line will be 6. Assuming that validation signal V2 is "1", the content in memory at location 6 will be incremented. Over the course of an image, memory 100 will contain a histogram of the pixels for the image in the category associated with the memory. If, for a particular pixel, validation signal V2 is "0" because that pixel is not in a category for which pixels are to be counted (e g., because that pixel does not have the correct direction, speed, or luminance), that. pixel will not be used in forming the histogram.

A20

Paragraph beginning on page 25, line 29:

The system of the invention includes a semi-graphic masking function to select pixels to be considered by the system. Fig. 17 shows a typical image 52 consisting of pixels 53 arranged in a Q x R matrix, which is divided into sub-matrices 51 each having a dimension of *s x t*, wherein each *s x t* sub-matrix includes *s x t* number of pixels of the image. Each sub- matrix shown in Fig. 17 is a 3x4 matrix. In a preferred embodiment, *s*=9 and *t*=12, although any appropriate sub-matrix size may be used, if desired, including 1 x 1. Referring to Fig. 12, histogram processor 22a includes a semi-graphic memory 50, which includes a one-bit memory location corresponding to each *s x t* matrix. For any given sub-matrix 51, the corresponding bit in memory 50 may be set to

A21 cont.

"0", which has the effect of ignoring all pixels in such sub-matrix 51, or may be set to "1" in which case all pixels in such sub-matrix 51 will be considered in forming histograms. Thus, by using semi-graphic memory 50, it is possible to limit those areas of the image to be considered during histogram formation. For example, when an image of a road taken by a camera facing forward on a vehicle is used to detect the lanes of the road, the pixel information of the road at the farthest distances from the camera generally does not contain useful information. Accordingly, in such an application, the semi- graphic memory 50 is used to mask off the distant portions of the road by setting semi-graphic memory 50 to ignore such pixels. Alternatively, the portion of the road to be ignored may be masked by setting the system to track pixels only within a detection box that excludes the undesired area of the screen, as discussed below.

A21 cont.

Paragraph beginning on page 27, line 3:

In order to locate the position of an object having user specified criteria within the image, histogram blocks 28 and 29 are used to generate histograms for the x and y positions of pixels with the selected criteria. These are shown in Fig. 13 as histograms along the x and y coordinates. These x and y data are output to moving area formation block 36 which combines the abscissa and ordinate information $x(m)_2$ and $y(m)_2$ respectively into a composite signal xy(m) that is output onto bus 23. A sample composite histogram 40 is shown in Fig. 13. The various histograms and composite signal xy(m) that are output to bus 23 are used to determine if there is a moving area in the image, to localize this area, and/or to determine its speed and oriented direction. Because the area in relative movement may be in an observation plane along directions x and y which are not necessarily orthogonal, as discussed below with respect to Fig. 18, a data change block 37 (Fig. 12) may be used to convert the x and y data to orthogonal coordinates. Data change block 37 receives orientation signals $x(m)_1$ and $y(m)_0$ for x(m)o and $y(m)_0$ axes, as well as pixel clock signals HP, line sequence and column sequence signals SL and SC (these three signals being grouped together in bundle F in

A22 cont.

SAMSUNG EXHIBIT 1004
Page 332 of 404

A22 CNH.

Figs. 2, 4, and 11) and generates the orthogonal $x(m)_1$ and $y(m)_1$ signals that are output to histogram formation blocks 28 and 29 respectively.

Paragraph beginning on page 27, line 20:

In order to process pixels only within a user defined area, the x-direction histogram formation unit 28 may be programmed to process pixels only in a class of pixels defined by boundaries, i.e. XMIN and XMAX. This is accomplished by setting the XMIN and XMAX values in a user-programmable memory in x-direction histogram formation unit 28 or in linear combination units 30-35. Any pixels outside of this class will not be processed. Similarly, y-direction histogram formation unit 29 may be set to process pixels only in a class of pixels defined by boundaries YMIN and YMAX. This is accomplished by setting the YMIN and YMAX values in a user-programmable memory in y-direction histogram formation unit 29 or in linear combination units 30-35. Thus, the system can process pixels only in a defined rectangle by setting the XMIN and XMAX, and YMIN and YMAX values as desired. Of course, the classification criteria and validation criteria from the other histogram formation units may be set in order to form histograms of only selected classes of pixels in selected domains within the selected rectangular area. The XMIN and XMAX memory locations have a sufficient number of bits to represent the maximum number of pixels in the x dimension of the image under consideration, and the YMIN and YMAX memory locations have a sufficient number of bits to represent the maximum number of pixels in the y dimension of the image under consideration. As discussed further below, the x and y axes may be rotated in order to create histograms of projections along the rotated axes. In a preferred embodiment, the XMIN, XMAX, YMIN and YMAX memory locations have a sufficient number of bits to represent the maximum number of pixels along the diagonal of the image under consideration (the distance from "Origin" to "Stop" in Fig. 15). In this way, the system may be used to search within a user-defined rectangle along a user-defined rotated axis system.

A23

Paragraph beginning on page 28, line 21:

Fig. 13 diagrammatically represents the envelopes of histograms 38 and 39, respectively in x and y coordinates, for velocity data. In this example, x_m and y_M represent the x and y coordinates of the maxima of the two histograms 38 and 39, whereas l_a and l_b for the x axis and l_c and l_d for the y axis represent the limits of the range of significant or interesting speeds, l_a and l_c being the lower limits and l_b and l_d being the upper limits of the significant portions of the histograms. Limits l_a, l_b, l_c and l_d may be set by the user or by an application program using the system, may be set as a ratio of the maximum of the histogram, e.g., $x_M/2$, or may be set as otherwise desired for the particular application.

a24

Paragraph beginning on page 29, line 25:

While the system of the invention has been described with respect to formation of histograms using an orthogonal coordinate system defined by the horizontal and vertical axes of the video image, the system may be used to form histograms using non-orthogonal axes that are user-defined. Figs. 15A and 15B show a method of using rotation of the analysis axis to determine the orientation of certain points in an image, a method which may be used, for example to detect lines. In a preferred embodiment, the x-axis may be rotated in up to 16 different directions (180°/16), and the y-axis may be independently rotated by up to 16 different directions. Rotation of the axes is accomplished using data line change block 37 which receives as an input the user-defined axes of rotation for each of the x and y axes, and which performs a Hough transform to convert the x and y coordinate values under consideration into the rotated coordinate axis system for consideration by the x and y histogram formation units 28 and 29. The operation of conversion between coordinate systems using a Hough transform is known in the art. Thus, the user may select rotation of the x-coordinate system in up to 16 different directions, and may independently rotate the y-coordinate system in up to 16 different directions. Using the rotated coordinate systems, the system may perform the functionality described above, including searching within user-defined rectangles (on the

a25 cont.

a25 cont.

rotated axes), forming histograms on the rotated axes, and searching using velocity, direction, etc.

Paragraph beginning on page 30, line 24:

Fig. 15A shows a histogram of certain points under consideration, where the histogram is taken along the x-axis, i.e., projected down onto the x-axis. In this example, the ratio R, while not calculated, is high, and contains little information about the orientation of the points under consideration. As the x-axis is rotated, the ratio R decreases, until, as shown in Fig. 15B, at approximately 45° the ratio R would reach a minimum. This indicates that the points under consideration are most closely aligned perpendicular to the 45° x=axis. In operation, on successive frames, or on the same frame if multiple x-direction histogram formation units are available, it is advantageous to calculate R at different angles, e.g., 33.75° and 57.25° (assuming the axes are limited to 16 degrees of rotation), in order to constantly ensure that R is at a minimum. For applications in which it is desirable to detect lines, and assuming the availability of 16 x-direction histogram formation units, it is advantageous to carry out the calculation of R simultaneously along all possible axes to determine the angle with the minimum R to determine the direction of orientation of the line. Because the x and y axes may be rotated independently, the x and y histogram formation units are capable of simultaneously independently detecting lines, such as each side line of a road, in the same manner.

a24

Paragraph beginning on page 31, line 11:

As discussed above, the system of the invention may be used to search for objects within a bounded area defined by XMIN, XMAX, YMIN and YMAX. Because a moving object may leave the bounded area the system preferably includes an anticipation function which enables XMIN, XMAX, YMIN and YMAX to be automatically modified by the system to compensate for the speed and direction of the target. This is accomplished by determining values for O-MVT, corresponding to orientation (direction) of movement of the target within the bounded area using the direction histogram, and I-

a21 cont.

MVT, corresponding to the intensity (velocity) of movement. Using these parameters, controller 42 may modify the values of XMIN, XMAX, YMIN and YMAX on a frame-by-frame basis to ensure that the target remains in the bounded box being searched. These parameters also enable the system to determine when a moving object, e.g., a line, that is being tracked based upon its axis of rotation, will be changing its axis of orientation, and enable the system to anticipate a new orientation axis in order to maintain a minimized value of R.

Paragraph beginning on page 31, line 25:

Referring to Fig. 12, a controller 42, which is preferably a conventional microprocessor based controller, is used to control the various elements of the system and to enable user input of commands and controls, such as with a computer mouse and keyboard (not shown), or other input device. Referring to Fig. 11, components 11 and 22a, and controller 42, are preferably formed on a single integrated circuit. Controller 42 is in communication with data bus 23, which allows controller 42 to run a program to control various parameters that may be set in the system and to analyze the results. In order to select the criteria of pixels to be tracked, controller 42 may also directly control the following: i) content of each register in classifiers 25b, ii) the content of each register in validation units 30-35; iii) the content of XMIN, XMAX, YMIN and YMAX, iv) the orientation angle of each of the x and y axes, and v) semi-graphic memory 50. Controller 42 may also retrieve i) the content of each memory 100 and ii) the content of registers 112, in order to analyze the results of the histogram formation process. In addition, in general controller 42 may access and control all data and parameters used in the system.

Paragraph beginning on page 32, line 28:

The system of the invention utilizes a video camera or other sensor to receive images of the driver T in order to detect when the driver is falling asleep. While various methods of positioning the sensor shall be described, the sensor may generally be positioned by any means and in any location that permits acquisition of a continuous image of the face of the driver when seated in the driver's seat. Thus, it is foreseen that

sensor 310 may be mounted to the vehicle or on the vehicle in any appropriate location, such as in or on the vehicle dashboard, steering wheel, door, rear-view mirror, ceiling, etc., to enable sensor 310 to view the face of the driver. An appropriate lens may be mounted on the sensor 310 to give the sensor a wider view if required to see drivers of different sizes.

a29 cont.

Paragraph beginning on page 33, line 7:

Figs. 18 and 19 show a conventional rear-view mirror arrangement in which a driver T can see ahead along direction 301 and rearward (via rays 302a and 302b) through a rear-view mirror 303. Referring to Fig. 20, mirror 303 is attached to the vehicle body 305 through a connecting arm 304 which enables adjustment of vision axes 302a and 302b. Axes 301 and 302b are generally parallel and are oriented in the direction of the vehicle. Optical axis 306, which is perpendicular to the face 303a of mirror 303, divides the angle formed by axes 302a and 302b into equal angles a and b. Axis 307, which is perpendicular to axis 302b and therefore generally parallel to the attachment portion of vehicle body 305, defines an angle c between axis 307 and mirror face 303a which is generally equal to angles a and b. A camera or sensor 310 is preferably mounted to the mirror by means of a bracket 299. The camera may be mounted in any desired position to enable the driver to have a clear view of the road while enabling sensor 310 to acquire images of the face of the driver. Bracket 299 may be an adjustable bracket, enabling the camera to be faced in a desired direction, i.e., toward the driver, or may be at a fixed orientation such that when the mirror is adjusted by drivers of different sizes, the camera continues to acquire the face of the driver. The signal from the camera is communicated to the image processing system, which operates as described below, by means of lead wires or the like (not shown in Figs. 18-20).

a30

Paragraph beginning on page 33, line 25:

Figs. 21 and 22 show a rear-view mirror assembly 308 in which sensor 310 is mounted interior to the mirror assembly. Mirror assembly 308 is adapted so that as assembly 308 is adjusted by a driver, sensor 310 remains directed toward the face of the

a31 cont.

driver. Rear-view mirror assembly 308 includes a two-way mirror 309 having a face 309a, movably oriented to provide a rear view to the driver. Sensor 310, .which is preferably an electronic mini-camera or MOS sensor with a built-in lens, is axed to a bracket 311, is oriented facing the driver using a mechanical arrangement that enables sensor 310 to receive an image of the face of the driver when mirror 309 is adjusted so that the driver has a rear view of the vehicle. The mechanical arrangement consists of a Cardan type mechanical joint, which causes automatic adjustment of the bracket 311 when the driver adjusts the rear view mirror so that the receiving face 310a of sensor 310 receives the image of the face of the driver, i.e., optical axis 310b remains aligned toward the head of the driver.

a31 cont'd.

Paragraph beginning on page 34, line 26:

Sensor 310 is connected by means of one or more lead wires 318 to image processor 319, which is preferably an image processing system of the type discussed above and is preferably in the form of an integrated circuit inside rear-view mirror assembly 308. In a preferred embodiment, image processing system 319 is integrally constructed with sensor 310. Alternatively, image processing system 319 may be located exterior to mirror assembly 308 by means of conventional lead wires. While controller 319 is preferably a microprocessor, it is foreseen that controller 319 may be an ASIC or simple controller designed to perform the functions specified herein, particularly if the system is embedded, e.g. contained in a mirror assembly or integral with a vehicle.

a32

Paragraph beginning on page 36, line 21:

As an alternative method of detecting the presence of the driver, if sensor 310 is mounted in a manner that enables (or requires) that the sensor be adjusted toward the face of the driver prior to use, e.g., by adjustment of the rear-view mirror shown in Fig. 21, the system may activate an alarm until the sensor has acquired the face of the driver.

a33

Paragraph beginning on page 36, line 25:

The driver may also be detected by using the image processing system to detect the driver entering the driver's seat. This assumes that the image processing system and sensor 310 are already powered when the driver enters the vehicle, such as by connecting the image processing system and sensor to a circuit of the vehicle electrical system that has constant power. Alternatively, the system may be powered upon detecting the vehicle door open, etc. When the driver enters the driver's seat, the image from sensor 310 will be characterized by many pixels of the image being in motion (DP=1), with CO having a relatively high value, moving in a lateral direction away from the driver's door. The pixels will also have hue characteristics of skin. In this embodiment, in a mode in which the system is trying to detect the presence of the driver, controller 42 sets the validation units to detect movement of the driver into the vehicle by setting the histogram formation units to detect movement characteristics of a driver entering the driver's seat. Most easily, controller 42 may set the validation units to detect DP=1, and analyze the histogram in the histogram formation unit for DP to detect movement indicative of a person entering the vehicle, e.g., NBPTS exceeding a threshold.

a34

Paragraph beginning on page 37, line 10:

Fig. 23 shows the field of view 323 of sensor 310 between directions 323a and 323b where the head T of the driver is within, and is preferably centered in, conical field 323. Field 323 may be kept relatively narrow, given that the movements of the head T of the driver during driving are limited. Limitation of field 323 improves the sensitivity of the system since the driver's face will be represented in the images received from sensor 310 by a greater number of pixels, which improves the histogram formation process discussed below.

a35

Paragraph beginning on page 39, line 1:

As illustrated in Fig. 24, the pixels having the selected characteristics are formed into histograms 324x and 324y along axes *Ox* and *Oy*, i.e., horizontal and vertical

a36 cont.

projections, respectively. Slight movements of the head of the driver having the characteristics selected are indicated as ripples 327a, 327b, 327c and 327d, which are shown in line form but which actually extend over a small area surrounding the periphery of the head. Peaks 325a and 325b of histogram 324x, and 325c and 325d of histogram 324y delimit, by their respective coordinates 326a, 326b, 326c and 326d, a frame bounded by straight lines *Ya, Yb, Xc, Xd*, which generally correspond to the area in which the face V of the driver is located. Controller 42 reads the histograms 324x and 324y from the histogram formation units, preferably during the blanking interval, and detects the locations of peaks 325a, 325b, 325c and 325d (408). In order to ensure that the head has been identified, the distance between peaks 325a and 325b and between peaks 325b and 325c are preferably tested to fall with a range corresponding to the normal ranges of human head sizes.

Paragraph beginning on page 39, line 15:

Once the location of coordinates 326a, 326b, 326c and 326d has been established, the area surrounding the face of the driver is masked from further processing (410). Referring to Fig. 25, this is accomplished by having controller 42 set XMIN, XMAX, YMIN and YMAX to correspond to *Xc, Xd, Ya*, and *Yb* respectively. This masks the cross- hatched area surrounding face V from further consideration, which helps to eliminate background movement from affecting the ability of the system to detect the eye(s) of the driver. Thus, for subsequent analysis, only pixels in central area Z, framed by the lines *Xc, Xd, Ya, Yb* and containing face V are considered. As an alternative method of masking the area outside central area Z, controller 42 may set the semi-graphic memory 50 (Fig. 12) to mask off these areas. As indicated above, the semi-graphic memory may be used to mask off selected pixels of the image in individual or small rectangular groups. Since head V is not rectangular, use of the semi-graphic memory enables better masking around the rounded edges of the face to better eliminate background pixels from further consideration.

Paragraph beginning on page 40, line 6:

Once the frame has been established, a Centered-Face flag is set to "1" (412), and controller 42 initiates the process of reducing the frame size to more closely surround the eyes of the driver. Referring to Fig. 26, in which frame Z denotes the area bounded by *Ya, , Yb, Xc, Xd* determined in the prior step, controller 42 initially uses the usual anthropomorphic ratio between the zone of the eyes and the entire face for a human being, especially in the vertical direction, to reduce the area under consideration to cover a smaller zone Z' bounded by lines *Y'a, Y'b, X'c* and *X'd* that includes the eyes U of the driver. Thus, the pixels in the outer cross-hatched area of Fig. 27 are eliminated from consideration and only the area within frame Z' is further considered. This is accomplished by having controller 42 set XMIN, XMAX, YMIN and YMAX to correspond to *X'c, X'd, Y'a*, and *Y'b* respectively (414). This masks the pixels in the area outside Z' from further consideration. Thus, for subsequent analysis, only pixels in area Z' containing eyes U are considered. As an alternative method of masking the area outside area Z', controller 42 may set the semi-graphic memory 50 to mask off these areas. It is foreseen that an anthropomorphic ratio may be used to set frame Z' around only a single eye, with detection of blinking being generally the same as described below, but for one eye only.

a38

Paragraph beginning on page 41, line 14:

Fig. 27 illustrates histogram 328*x* along axis *Ox* and histogram 328*y* along axis *Oy* of the pixels with the selected criteria corresponding to the driver's eyelids, preferably DP=1 with vertical movement. Controller 42 analyzes the histogram and determines peaks 329a, 329b, 329c and 329d of the histogram. These peaks are used to determine horizontal lines *X"c* and *X"d* and vertical lines *Y"a* and *Y"b* which define an area of movement of the eyelids Z", the movements of the edges of which are indicated at 330a and 330b for one eye and 330c and 330d for the other eye (424). The position of the frame bounded by *Y"a, Y"b, X"c, X"d* is preferably determined and updated by time-averaging the values of peaks 329a, 329b, 329c and 329d, preferably every ten frames or

a39 cont.

A39 cont.

less. Once the eyes have been detected and frame Z" has been established an Eye Centered flag is set to "1" (426) and only pixels within frame Z" are thereafter processed.

Paragraph beginning on page 42, line 3:

A40

Fig. 29A illustrates on curve C the variation over time of the number of pixels in each frame having the selected criteria, e.g., DP = 1, wherein successive peaks P1, P2, P3 correspond to successive blinks. This information is determined by controller 42 by reading NBPTS of the *x* and/or *y* histogram formation units. Alternatively, controller 42 may analyze the *x* and/or *y* histograms of the histogram formation units (Fig. 27) to detect peaks 329a and 329b and/or 329c and 329d, which over time will exhibit graph characteristics similar to those shown in Fig. 29A.

Paragraph beginning on page 42, line 10:

A41

Controller 42 analyzes the data in Fig. 29A over time to determine the location and timing of peaks in the graph (428). This may be done, for example, as shown in Fig. 29B, by converting the graph shown in Fig. 29A into a binary data stream, in which all pixel counts over a threshold are set to "1", and all pixel counts below the threshold are set to "0" (vertical dashes 331), in order to convert peaks P1, P2, P3 to framed rectangles R1, R2 R3, respectively. Finally, Fig. 29B shows the lengths of each blink (5, 6, and 5 frames respectively for blinks P1, P2 and P3) and the time intervals (14 and 17 frames for the intervals between blinks P1 and P2, and P2 and P3 respectively). This information is determined by controller 42 through an analysis of the peak data over time.

Paragraph beginning on page 42, line 28:

A42

Figs. 31 - 36 show an alternative method by which the generic image processing system may be used to detect a driver falling asleep. Initially, controller 42 is placed in a search mode (350) (Fig. 35), in which controller 42 scans the image to detect one or more image. It is also foreseen that the entire image may be searched at once for the nostrils, if desired.

Paragraph beginning on page 45, line 3:

In the present example, only a single eye is analyzed to determine when the driver is falling asleep. In this case the shadow of the eye in the open and closed positions is used to determine from the shape of the shadow whether the eye is open or closed. As discussed above, for night-time applications, the invention is preferably used in combination with a short-wave IR light source. For the presently described example, the IR light source is preferably positioned above the driver at a position to cast a shadow having a shape capable of detection by the system. The anthropomorphic model is preferably adaptive to motion, to features of the driver, and to angular changes of the driver relative to the sensor.

a43

Paragraph beginning on page 45, line 12:

Referring to Fig. 32, having determined the location of the nostrils 272 of the driver having a center position X_N, Y_N, a search box 276 is established around an eye 274 of the driver (366). The location of search box 276 is set using an anthropomorphic model, wherein the spatial relationship between the eyes and nose of humans is known. Controller 42 sets XMIN, XMAX, YMIN, and YMAX to search within the area defined by search box 276. Controller 42 further sets the luminance and x and y direction histograms to be on, with the linear combination unit for luminance set to detect low histogram levels relative to the rest of the image, e.g., the lowest 15% of the luminance levels (368). As a confirmation of the detection of the nostrils or other facial feature being detected, search box 276, which is established around an eye of the driver using an anthropomorphic model, may be analyzed for characteristics indicative of an eye present in the search box. These characteristics may include, for example, a moving eyelid, a pupil, iris or cornea, a shape corresponding to an eye, a shadow corresponding to an eye, or any other indica indicative of an eye. Controller 42 sets the histogram formation units to detect the desired criteria. For example, Fig. 36 shows a sample histogram of a pupil 432, in which the linear combination units and validation units are set to detect pixels with very low luminance levels and high gloss that are characteristic of a pupil. The

a44 cont.

pupil may be verified by comparing the shapes of the x and y histograms to known characteristics of the pupil, which are generally symmetrical, keeping in mind that the symmetry may be affected by the angular relationship between the sensor and the head of the driver.

IN THE CLAIMS:

Please amend claims 1, 2, 3, 7, 9-12, 23 and 39 to read as follows:

1. (Amended) A process of detecting a person falling asleep, the process comprising:

acquiring an image of the face of the person;

identifying a sub-area of the image comprising at least one eye of the person, including:

identifying the head of the person in the image; and

identifying the sub-area of the image using an anthropomorphic model;

selecting pixels within the sub-area of the image having characteristics corresponding to characteristics of the at least one eye of the person;

forming at least one histogram of the selected pixels;

analyzing the at least one histogram over time to identify each opening and closing of the eye; and

determining from the opening and closing information of the eye, characteristics indicative of a person falling asleep.

a45 cont.

2. (Amended) The process according to claim 1 wherein identifying the head of the person in the image comprises:

selecting pixels of the image having characteristics corresponding to edges of the head of the person;

forming histograms of the selected pixels projected onto forthogonal axes; and

analyzing the histograms of the selected pixels to identify the edges of the head of the person.

3. (Amended) A process of detecting a person falling asleep, the process comprising:

acquiring an image of the face of the person;

83

A

identifying a sub-area of the image comprising at least one eye of the person, including:

identifying the location of a facial characteristic of the person in the image; and

identifying the sub-area of the image using an anthropomorphic model and the location of the facial characteristic;

a45 cancel.

selecting pixels within the sub-area of the image having characteristics corresponding to characteristics of the at least one eye of the person;

forming at least one histogram of the selected pixels;,

analyzing the at least one histogram over time to identify each opening and closing of the eye; and

determining from the opening and closing information of the eye, characteristics indicative of a person falling asleep.

---

10 ↗. (Amended) A process of detecting a person falling asleep, the process comprising the steps of

acquiring an image of the face of the person;

selecting pixels of the image having characteristics corresponding to characteristics of at least one eye of the person;

forming at least one histogram of the selected pixels;

analyzing the at least one histogram over time to identify each opening

a46 and closing of the eye; and

determining from the opening and closing information of the eye, characteristics indicative of a person falling asleep;

wherein the step of selecting pixels of the image comprises selecting pixels having low luminance levels corresponding to shadowing of the eye; and

wherein the step of analyzing the at least one histogram comprises analyzing the shape of the eye shadowing to determine openings and closings of the eye.

84

12 9. (Amended) A process of detecting a person falling asleep, the process comprising the steps of:

acquiring an image of the face of the person;

selecting pixels of the image having characteristics corresponding to characteristics of at least one eye of the person;

forming at least one histogram of the selected pixels;

analyzing the at least one histogram over time to identify each opening and closing of the eye; and

determining from the opening and closing information of the eye, characteristics indicative of a person falling asleep;

wherein the step of selecting pixels of the image comprises selecting pixels in movement corresponding to blinking; and

wherein the step of analyzing the at least one histogram comprises analyzing the number of pixels in movement over time to determine openings and closings of the eye.

a47 cont.

13 10. (Amended) The process according to claim 12 wherein the step of selecting pixels of the image having characteristics corresponding to characteristics of at least one eye of the person comprises selecting pixels having one or more characteristics selected from the group consisting of i) parameter DP= 1 indicative of significant variation, ii) time constant CO indicative of a blinking eyelid, iii) velocity indicative of a blinking eyelid, and iv) up and down movement indicative of a blinking eyelid.

8 11. (Amended) The process according to claim 3 wherein the step of identifying the location of a facial characteristic of the person in the image comprises the step of searching sub-images of the image to identify the facial characteristic.

85

A

PATENT

a47 cont'd.

7 ~~12~~. The process according to claim 5 wherein the step of identifying the location of a facial characteristic of the person in the image comprises the step of searching sub-images of the image to identify the nostrils.

a48

26 ~~23~~. (Amended) The apparatus according to claim 25 ~~22~~ wherein the histogram formation units selects pixels of the image having characteristics of movement corresponding to blinking, such characteristics being selected from the group consisting of i) parameter DP =1 indicative of significant variation, ii) time constant CO indicative of a blinking eyelid, iii) velocity indicative of a blinking eyelid, and iv) up and down movement indicative of a blinking eyelid.

a49

39. (Amended) A process of detecting a feature of an eye, the process comprising the steps of:

acquiring an image of the face of the person, the image comprising pixels corresponding to the feature to be detected;

identifying a characteristic of the face other than the feature to be detected;

identifying a portion of the image of the face comprising the feature to be detected using an anthropomorphic model based on the location of the identified facial characteristic;

selecting pixels of the portion of the image having characteristics corresponding to the feature to be detected;

forming at least one histogram of the selected pixels; and

analyzing the at least one histogram over time to identify characteristics of the feature to be detected;

said feature being the iris, pupil or cornea.

86

REMARKS

Claims 1-39 are pending. Claims 1, 2, 3, 7, 9-12, 23 and 39 have hereby been amended.

Objections to the Drawings

The drawings were objected to as failing to comply with 37 CFR 1.84(p)(5). In particular, the reference sign "327d" as mentioned in the description is not included. A proposed correction to Fig. 24 is included, wherein "27d" is replaced with "327d". Additionally, it is alleged that the reference signs "10a" in Fig. 1 and "13A" in Fig. 2 are not mentioned in the description. With regard to the reference sign "10a" Applicants respectfully point out page 10, line 5 and page 29, line 23 for discussion of "10a". With regard to the reference sign "13A", correction has been made to the specification, specifically to the paragraph beginning at page 8, line 24, to include the reference "13A".

The drawings were objected to because the lowermost figure on sheet 5 is not labeled as a "figure". A proposed correction to sheet 5 is included, wherein the lowermost figure is labeled as "Figure 11".

The drawings were objected to because it appears that "Z'" in Figs. 2 and 11 should be "Z_1". A proposed correction to Figures 2 and 11 are included, wherein "Z'" is replaced with "Z_1".

The drawings were objected to because it appears that "VI" in Fig. 2 should be "VL". A proposed correction to Figure 2 is included, wherein "VI" is replaced with "VL".

The drawings were objected to because it appears that "DL" in Fig. 11 should be "DI". A proposed correction to Figure 11 is included, wherein "DL" is replaced with "DI".

Additional proposed corrections to the drawings are included to conform the drawings to the specification. In particular, corrections were made to Figs. 8, 16 and 29. No new matter is introduced by these corrections.

Minor Errors in Specification

Numerous minor errors were identified by the Examiner. The specification has hereby been amended to correct the indicated minor errors as well as other minor errors. No new matter is presented by such amendments.

Objections to the Claims

Claims 3 and 9 were objected to under MPEP 608.01(m) as containing reference characters not enclosed by parentheses. Appropriate correction has been made in the amendments to claims 3 and 9 herein, by removing the reference characters.

Claims 2, 7-13 and 39 were objected to under 37 CFR 1.75(a) for failing to particularly point out and distinctly claim the subject mater which applicants regard as the invention. Appropriate amendments have been made to these claims so as to more particularly point out and distinctly claim the invention.

Rejections to the Claims

Claims 1-6, 10-13 and 23 were rejected under 35 USC §112, second paragraph, as being indefinite. Appropriate amendments have been made to these claims so as to more particularly point out and distinctly claim the invention.

Claim 39 has been rejected under 35 USC §102(b) as being anticipated by Gerhardt et al., U.S. Patent No. 5,481,622.

Applicants respectfully assert that Gerhardt fails to teach or suggest either or both of the limitations of "identifying a characteristic of the face other than the feature to be detected" and "identifying a portion of the image of the face comprising the feature to be detected using an anthropomorphic model based on the location of the identified facial characteristic" as is recited in amended claim 39. Accordingly, withdrawal of this rejection is respectfully requested.

Allowable Subject Matter

Applicants thank the Examiner for the indicated allowability of claims 14-22 and 24-38.

Claims 1-13 and 23 were indicated to be allowable if rewritten or amended to overcome the rejections under 35 USC §112, second paragraph. Such amendments to the claims have been made, and Applicants respectfully assert that these claims are now in condition for allowance.

CONCLUSION

In view of the foregoing, Applicants believe all claims now pending in this Application are in condition for allowance. The issuance of a formal Notice of Allowance at an early date is respectfully requested.

If the Examiner believes a telephone conference would expedite prosecution of this application, please telephone the undersigned at 925-472-5000.

Respectfully submitted,

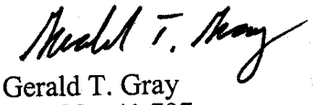

Gerald T. Gray
Reg. No. 41,797

TOWNSEND and TOWNSEND and CREW LLP
Two Embarcadero Center, 8th Floor
San Francisco, California 94111-3834
Tel: 925-472-5000
Fax: 415-576-0300
GTG:jkh
SF 1428653 v1

VERSION WITH MARKINGS TO SHOW CHANGES MADE

IN THE SPECIFICATION:

Please replace the indicated paragraphs as follows:

Paragraph beginning on page 1, line 21:

Numerous devices have been proposed to detect drowsiness of drivers. Such devices are shown, for example, in U.S. Patent Nos. 5,841,354; **[5,813,99]** 5,813,993; 5,689,241; 5,684,461; 5,682,144; 5,469,143; 5,402,109; 5,353,013; 5,195,606; 4,928,090; 4,555,697; 4,485,375; and 4,259,665. In general, these devices fall into three categories: i) devices that detect movement of the head of the driver, e.g., tilting; ii) devices that detect a physiological change in the driver, e.g., altered heartbeat or breathing, and iii) devices that detect a physical result of the driver falling asleep, e.g., a reduced grip on the steering wheel. None of these devices is believed to have met with commercial success.

Paragraph beginning on page 2, line 1:

The German patent application DE **[19715515]** 19715519 and the corresponding French patent application FR-2.747.346 disclose an apparatus and a process of evaluation of the drowsiness level of a driver using a video camera placed near the feet of the driver and a processing unit for processing the camera image with **[a]** software detecting the blinks of the eyes **[determining]** to determine the time gap between the beginning and the end of the blink. More particularly, a unit **[10]** of the processor realizes

- a memorization of the video image and its treatment, so as to determine an area comprising the driver's eyes,
- the detection of the time gap between the closing of the driver eyelids and their full opening and

- a treatment in a memo **[11]** and a processor **[22]** in combination with the unit **[10]** to calculate a ratio of slow blink apparition.

Paragraph beginning on page 2, line 23:

Commonly-owned PCT Application Serial Nos. PCT/FR97/01354 and PCT/EP98/05383 disclose a generic image processing system that operates to localize the driver, or a facial characteristic of the driver, such as the driver's nostrils, and then **[identifying]** identify the sub-area of the image using an anthropomorphic model. The head of the driver may be identified by selecting pixels of the image having characteristics corresponding to edges of the head of the driver. Histograms of the selected pixels of the edges of the driver's head are projected onto orthogonal axes. These histograms are then analyzed to identify the edges of the driver's head. .

Paragraph beginning on page 3, line 7:

The facial characteristic of the driver may be identified by selecting pixels of the image having characteristics corresponding to the facial characteristic. Histograms of the selected pixels of the facial characteristic are projected onto orthogonal axes. These histograms are then analyzed to identify the facial characteristic. If desired, the step of identifying the facial characteristic in the image involves searching sub-images of the image until the facial characteristic is found. In the case in which the facial characteristic is the nostrils of the driver, a histogram is formed of pixels having low luminance levels to detect the nostrils. To confirm detection of the nostrils, the histograms of the nostril pixels may be analyzed to determine whether the spacing between the nostrils is within a desired range and whether the dimensions of the nostrils fall within a desired range. In order to confirm the identification of the facial characteristic, an anthropomorphic model and the location of the facial characteristic are used to select a sub-area of the image containing a second facial characteristic. Pixels of the image having characteristics corresponding to the second facial characteristic are selected and **[a]** histograms of the selected pixels of the second facial characteristic are analyzed to confirm the identification of the first facial characteristic.

Paragraph beginning on page 3, line 23:

In order to determine openings and closings of the eyes of the driver, the step of selecting pixels of the image having characteristics corresponding to characteristics of an eye of the driver involves selecting pixels having low luminance levels corresponding to shadowing of the eye. In this embodiment, the step of analyzing the histogram over time to identify each opening and closing of the eye involves analyzing the shape of the eye shadowing to determine openings and closings of the eye. The histograms of shadowed pixels are preferably projected onto orthogonal axes, and the step of analyzing the shape of the eye shadowing involves analyzing the width and height of the shadowing.

Paragraph beginning on page 4, line 1:

An alternative method of determining openings and closings of the eyes of the driver involves selecting pixels of the image having characteristics of movement corresponding to blinking. In this embodiment, the step of analyzing the histogram over time to identify each opening and closing of the eye involves analyzing the number of pixels in movement corresponding to blinking over time. The characteristics of a blinking eye are preferably selected from the group consisting of i) DP=1, ii) CO indicative of a blinking eyelid, iii) velocity indicative of a blinking eyelid, and iv) up and down movement indicative of a blinking eyelid.

Paragraph beginning on page 4, line 9:

An apparatus for detecting a driver falling asleep includes a sensor for acquiring an image of the face of the driver, a controller, and a histogram formation unit for forming a histogram on pixels having selected characteristics. The controller controls the histogram formation unit to select pixels of the image having characteristics corresponding to characteristics of at least one eye of the driver and to form a histogram of the selected pixels. The controller analyzes the histogram over time to **[identify]** identifies each opening and closing of the eye, and determines from the opening and closing information on the eye, characteristics indicative of the driver falling asleep.

Paragraph beginning on page 8, line 24:

The apparatus of the invention is similar to that described in the aforementioned PCT Application Serial Nos. PCT/FR97/01354 and PCT/EP98/05383, which will be described herein for purposes of clarity. Referring to Figs. 1 and **[10]** 11, the generic image processing system 22 includes a spatial and temporal processing unit 11 in combination with a histogram formation unit 22a. Spatial and temporal processing unit 11 includes an input 12 that receives a digital video signal S originating from a video camera or other imaging device 13 which monitors a scene 13a. Imaging device 13 is preferably a conventional CMOS-type CCD camera, which for purposes of the presently-described invention is mounted on a vehicle facing the driver. It will be appreciated that when used in non-vehicular applications, the camera may be mounted in any desired fashion to detect the specific criteria of interest. It is also foreseen that any other appropriate sensor, e.g., ultrasound, IR, Radar, etc., may be used as the imaging device. Imaging device 13 may have a direct digital output, or an analog output that is converted by an A/D converter into digital signal S. Imaging device 13 may also be integral with generic image processing system 22, if desired, for example as represented by element 13A.

Paragraph beginning on page 9, line 9:

While signal S may be a progressive signal, it is preferably composed of a succession of pairs of interlaced frames, TR_1 and TR'_1 and TR_2 and TR'_2, each consisting of a succession of horizontal scanned lines, e.g., $l_{1.1}$, $l_{1.2}$,...,$l_{1.17}$ in TR_1, and **[2.1]** $l_{2.1}$, TR_2. Each line consists of a succession of pixels or image points PI, e.g., $a_{1.1}$, $a_{1.2}$ and $a_{1.3}$ for line $l_{1.1}$; **[$al_{17.1}$]** $a_{17.1}$ and **[$al_{17.22}$]** $al_{17.2}$ for line $l_{1.17}$; **[$al_{1.1}$]** $a_{1.1}$ and $a_{1.2}$ for line $l_{2.1}$. Signal S(PI) represents signal S composed of pixels PI.

Paragraph beginning on page 9, line 15:

S(PI) includes a frame synchronization signal (ST) at the beginning of each frame, a line synchronization signal (SL) at the beginning of each line, and a blanking signal (BL). Thus, S(PI) includes a succession of frames, which are

representative of the time domain, and within each frame, a series of lines and pixels, which are representative of the spatial domain.

Paragraph beginning on page 9, line 20:

In the time domain, "successive frames" shall refer to successive frames of the same type (i.e., odd frames such as TR_1 or even frames such as TR'_1), and "successive pixels in the same position" shall denote successive values of the pixels (PI) in the same location in successive frames of the same type, e.g., $a_{1.1}$ of $l_{1.1}$ in frame TR_1 and $a_{1.1}$ of $l_{1.1}$ in the next corresponding frame TR_2.

Paragraph beginning on page 9, line 25:

Spatial and temporal processing unit 11 generates outputs ZH and SR 14 to a data bus 23 (Fig. **[11]** 12), which are preferably digital signals. Complex signal ZH comprises a number of output signals generated by the system, preferably including signals indicating the existence and localization of an area or object in motion, and the speed V and the oriented direction of displacement DI of each pixel of the image. Also preferably output from the system is input digital video signal S, which is delayed (SR) to make it synchronous with the output ZH for the frame, taking into account the calculation time for the data in composite signal ZH (one frame). The delayed signal SR is used to display the image received by camera 13 on a monitor or television screen 10, which may also be used to display the information contained in composite signal ZH. Composite signal ZH may also be transmitted to a separate processing assembly 10a in which further processing of the signal may be accomplished.

Paragraph beginning on page 10, line 25:

Referring to Fig. 3, temporal processing unit 15 includes a first block 15a which receives the pixels PI of input video signal S. For each pixel PI, the temporal processing unit 15 retrieves from memory 16 a smoothed value LI of this pixel from the immediately preceding corresponding frame, which was calculated by temporal processing unit 15 during processing of the immediately prior frame and stored in

memory 16 as LO. Temporal processing unit 15 calculates the absolute value AB of the difference between each pixel value PI and LI for the same pixel position (for example $a_{1.1}$, of $1_{1.1}$ in TR_1 and of $l_{1.1}$ in TR_2:

[AB = |PI-LI] AB = |PI-LI|

Paragraph beginning on page 14, line 9:

Spatial processing unit 17 distributes into *l x m* matrix 21 the incoming flows of Dp_{ijt} and **[CO_{jt}]** CO_{ijt} from temporal processing unit 15. It will be appreciated that only a subset of all DPijt, and CO_{ijt} values will be included in matrix 21, since the frame is much larger, having L lines and M pixels per row (e.g., 312.5 lines and 250-800 pixels), depending upon the TV standard used.

Paragraph beginning on page 16, line 24:

In matrix M3, positions a, b, c, d, f, g, h, i around the central pixel e correspond to eight oriented directions relative to the central pixel. The eight directions may be identified using the Freeman code illustrated in Fig. 6, the directions being coded 0 to 7 starting from the x axis, in steps of 45**[-.]**. In the Freeman code, the eight possible oriented directions, may be represented by a 3-bit number since $2^3 = 8$.

Paragraph beginning on page 18, line 6:

Two tests are preferably performed on the results to remove uncertainties. The first test chooses the strongest variation, in other words the highest time constant, if there are variations of CO along several directions in one of the nested matrices. The second test arbitrarily chooses one of two (or more) directions along which the variation of CO is identical, for example by choosing the smallest value of the Freeman code, in the instance when identical lines of motion are directed in a single matrix in different directions. This usually arises when the actual direction of displacement is approximately between two successive coded directions in the Freeman code, for example between directions 1 and 2 corresponding to an (oriented) direction that can be

denoted 1.5 (Fig. 6) of about 67.5**[-]**. with the x axis direction (direction 0 in the Freeman code).

Paragraph beginning on page 20, line 6:

Fig. 9 shows the case in which DP = **[I]** 1 and CO_u changes value by one unit in the two specific positions L_{u3} and C_{u5} and indicates the corresponding slope P_P. In all cases, the displacement speed is a function of the position in which CO changes value by one unit. If CO changes by one unit in L_u or C_u only, it corresponds to the value of the CO variation position. If CO changes by one unit in a position in L_u and in a position in C_u, the speed is proportional to the distance between MR_u and E_u (intersection of the line perpendicular to C_u - L_u passing through MR_u).

Paragraph beginning on page 23, line 1:

Classifier 25b enables only data having selected classification criteria to be considered further, meaning to possibly be included in the histograms formed by histogram formation blocks 24-29. For example, with respect , to speed, which is preferably a value in the range of 0-7, classifier 25b may be set to consider only data within a particular speed category or categories, e.g., speed 1, speeds 3 or 5, speed 3-6, etc. Classifier 25b includes a register 106 that enables the classification criteria to be set by the user, or by a separate computer program. By way of example, register 106 will include, in the case of speed, eight registers numbered 0-7. By setting a register to "1", e.g., register number 2, only data that meets the criteria of the selected class, e.g., speed 2, will result in a classification output of "1". Expressed mathematically, for any given register in which R(k) = b, where k is the register number and b is the boolean value stored in the register:

Output= R(data(V))

So for a data point V of magnitude 2, the output of classifier 25b will be "1" only if R(2)=1. The classifier associated with histogram formation block 24 preferably has 256

registers, one register for each possible luminance value of the image. The classifier associated with histogram formation block 26 preferably has 8 registers, one register for each possible direction value. The classifier associated with histogram formation block 27 preferably has 8 registers, one register for each possible value of CO. The classifier associated with histogram formation block 28 preferably has the same number of registers as the number of pixels per line. Finally, the classifier associated with histogram formation block 29 preferably has the same number of registers as the number of fines per frame. The output of each classifier is communicated to each of the validation blocks 30-35 via bus 23, in the case of histogram formation blocks 28 **[an]** and 29, through combination unit 36, which will be discussed further below.

Paragraph beginning on page 23, line 26:

Validation units 30-35 receive the classification information in parallel from all classification units in histogram formation blocks 24 - 29. Each validation unit generates a validation signal which is communicated to its associated histogram formation block 24 - 29. The validation signal determines, for each incoming pixel, whether the histogram formation block will utilize that pixel in forming **[it]** its histogram. Referring again to Fig. 14, which shows histogram formation block 25, validation unit 31 includes a register block 108 having a register associated with each histogram formation block, or more generally, a register associated with each data domain that the system is capable of processing, in this case, luminance, speed, direction, CO, and x and y position. The content of each register in register block 108 is a binary value that may be set by a user or by a computer controller. Each validation unit receive via bus 23 the output of each of the classifiers, in this case numbered 0 ... p, keeping in mind that for any data domain, e.g., speed, the output of the classifier for that data domain will only be "1" if the particular data point being considered is in the class of the registers set to "1" in the classifier for that data domain. The validation signal from each validation unit will only be "1" if for each register in the validation unit that is set to "1", an input of "1" is

received from the classifier for the domain of that register. This may be expressed as follows:

$$out = (\overline{in}_o + Reg_o).(\overline{in}_1 + Reg_1)...(\overline{in}_n + Reg_n)(in_o + in_1 + ...in_n)$$

where Reg_o is the register in the validation unit associated with input in_o. Thus, using the classifiers in combination with validation units 30 - 35, the system may select for processing only data points in any selected classes within any selected domains. For example, the system may be used to detect only data points having speed 2, direction 4, and luminance 125 by setting each of the following registers to "1 ": the registers in the validation units for speed, direction, and luminance, register 2 in the speed classifier, register 4 in the direction classifier, and register 125 in the luminance classifier. In order to form those pixels into a block, the registers in the validation units for the x and y directions would be set to "1" as well.

Paragraph beginning on page 24, line 24:

Referring again to Fig. **[13]** 14, validation signal V2 is updated on a pixel-by-pixel basis. If, for a particular pixel, validation signal V2 is "1", adder 110 increments the output of memory 100 by one. If, for a particular pixel, validation signal V2 is "0", adder 100 does not **[increments]** increment the output of memory. In any case, the output of adder 100 is stored in memory 100 at the address corresponding to the pixel being considered. For example, assuming that memory 100 is used to form a histogram of speed, which may be categorized as speeds 0-7, and where memory 100 will include 0-7 corresponding memory locations, if a pixel with speed 6 is received, the address input to multiplexor 104 through the data line will be 6. Assuming that validation signal V2 is "1", the content in memory at location 6 will be incremented. Over the course of an image, memory 100 will contain a histogram of the pixels for the image in the category associated with the memory. If, for a particular pixel, validation signal V2 is "0" because that pixel is not in a category for which pixels are to be counted (e g., because that pixel does not have the correct direction, speed, or luminance), that. pixel will not be used in forming the histogram.

Paragraph beginning on page 25, line 29:

The system of the invention includes a semi-graphic masking function to select pixels to be considered by the system. Fig. **[16]** 17 shows a typical image **[53]** 52 consisting of pixels 53 arranged in a Q x R matrix, which is divided into sub-matrices 51 each having a dimension of *s x t*, wherein each *s x t* sub-matrix includes *s x t* number of pixels of the image. Each sub- matrix shown in Fig. 17 is a 3x4 matrix. In a preferred embodiment, *s*=9 and *t*=12, although any appropriate sub-matrix size may be used, if desired, including 1 x 1. Referring to Fig. 12, histogram processor 22a includes a semi-graphic memory 50, which includes a one-bit memory location corresponding to each *s x t* matrix. For any given sub-matrix 51, the corresponding bit in memory 50 may be set to "0", which has the effect of ignoring all pixels in such sub-matrix **[50]** 51, or may be set to "1" in which case all pixels in such sub-matrix 51 will be considered in forming histograms. Thus, by using semi-graphic memory 50, it is possible to limit those areas of the image to be considered during histogram formation. For example, when an image of a road taken by a camera facing forward on a vehicle is used to detect the lanes of the road, the pixel information of the road at the farthest distances from the camera generally does not contain useful information. Accordingly, in such an application, the semi-graphic memory 50 is used to mask off the distant portions of the road by setting semi-graphic memory 50 to ignore such pixels. Alternatively, the portion of the road to be ignored may be masked by setting the system to track pixels only within a detection box that excludes the undesired area of the screen, as discussed below.

Paragraph beginning on page 27, line 3:

In order to locate the position of an object having user specified criteria within the image, histogram blocks 28 and 29 are used to generate histograms for the x and y positions of pixels with the selected criteria. These are shown in Fig. 13 as histograms along the x and y coordinates. These x and y data are output to moving area formation block 36 which combines the abscissa and ordinate information $x(m)_2$ and $y(m)_2$ respectively into a composite signal xy(m) that is output onto bus 23. A sample

composite histogram 40 is shown in Fig. 13. The various histograms and composite signal xy(m) that are output to bus 23 are used to determine if there is a moving area in the image, to localize this area, and/or to determine its speed and oriented direction. Because the area in relative movement may be in an observation plane along directions x and y which are not necessarily orthogonal, as discussed below with respect to Fig. 18, a data change block 37 (Fig. 12) may be used to convert the x and y data to orthogonal coordinates. Data change block 37 receives orientation signals $x(m)_1$ and $y(m)_0$ for x(m)o and $y(m)_0$ axes, as well as pixel clock signals HP, line sequence and column sequence signals SL and SC (these three signals being grouped together in bundle F in Figs. 2, 4, and **[10]** 11) and generates the orthogonal $x(m)_1$ and $y(m)_1$ signals that are output to histogram formation blocks 28 and 29 respectively.

Paragraph beginning on page 27, line 20:

In order to process pixels only within a user defined area, the x-direction histogram formation unit 28 may be programmed to process pixels only in a class of pixels defined by boundaries, i.e. XMIN and XMAX. This is accomplished by setting the XMIN and XMAX values in a user-programmable memory in x-direction histogram formation unit 28 or in linear combination units 30-35. Any pixels outside of this class will not be processed. Similarly, y-direction histogram formation unit 29 may be set to process pixels only in a class of pixels defined by boundaries YMIN and YMAX. This is accomplished by setting the YMIN and YMAX values in a user-programmable memory in y-direction histogram formation unit 29 or in linear combination units 30-35. Thus, the system can process pixels only in a defined rectangle by setting the XMIN and XMAX, and YMIN and YMAX values as desired. Of course, the classification criteria and validation criteria from the other histogram formation units may be set in order to form histograms of only selected classes of pixels in selected domains within the selected rectangular area. The XMIN and XMAX memory locations have a sufficient number of bits to represent the maximum number of pixels in the x dimension of the image under consideration, and the YMIN and YMAX memory locations have a sufficient number of

bits to represent the maximum number of pixels in the y dimension of the image under consideration. As discussed further below, the x and y axes may be rotated in order to create histograms of projections along the rotated axes. In a preferred embodiment, the XMIN, XMAX, YMIN and YMAX memory locations have a sufficient number of bits to represent the maximum number of pixels along the diagonal of the image under consideration (the distance from "Origin" to "Stop" in Fig. 15). In this way, the system may be used to search within a user-defined rectangle along a user-defined rotated axis system.

Paragraph beginning on page 28, line 21:

Fig. 13 diagrammatically represents the envelopes of histograms 38 and 39, respectively in x and y coordinates, for velocity data. In this example, x_m and y_M represent the x and y coordinates of the maxima of the two histograms 38 and 39, whereas l_a and l_b for the x axis and l_c and l_d for the y axis represent the limits of the range of significant or interesting speeds, l_a and l_c being the **[longer]** lower limits and l_b and l_d being the upper **[limited]** limits of the significant portions of the histograms. Limits l_a, l_b, l_c and l_d may be set by the user or by an application program using the system, may be set as a ratio of the maximum of the histogram, e.g., $x_M/2$, or may be set as otherwise desired for the particular application.

Paragraph beginning on page 29, line 25:

While the system of the invention has been described with respect to formation of histograms using an orthogonal coordinate system defined by the horizontal and vertical axes of the video image, the system may be used to form histograms using non-orthogonal axes that are user-defined. Figs. 15A and 15B show a method of using rotation of the analysis axis to determine the orientation of certain points in an image, a method which may be used, for example to detect lines. In a preferred embodiment, the x-axis may be rotated in up to 16 different directions (180°/16), and the y-axis may be independently rotated by up to 16 different directions. Rotation of the axes is accomplished using data line change block 37 which receives as an input the user-defined

axes of rotation for each of the x **[any]** and y axes, and which performs a Hough transform to convert the x and y coordinate values under consideration into the rotated coordinate axis system for consideration by the x and y histogram formation units 28 and 29. The operation of conversion between coordinate systems using a Hough transform is known in the art. Thus, the user may select rotation of the x-coordinate system in up to 16 different directions, and may independently rotate the y-coordinate system in up to 16 different directions. Using the rotated coordinate systems, the system may perform the functionality described above, including searching within user-defined rectangles (on the rotated axes), forming histograms on the rotated axes, and searching using velocity, direction, etc.

Paragraph beginning on page 30, line 24:

Fig. 15A shows a histogram of certain points under consideration, where the histogram is taken along the x-axis, i.e., projected down onto the x-axis. In this example, the ratio R, while not calculated, is high, and contains little information about the orientation of the points under consideration. As the x-axis is rotated, the ratio R **[increases]** decreases, until, as shown in Fig. 15B, at approximately 45° the ratio R would reach a **[maximum]** minimum. This indicates that the points under consideration are most closely aligned perpendicular to the 45° x=axis. In operation, on successive frames, or on the same frame if multiple x-direction histogram formation units are available, it is advantageous to calculate R at different angles, e.g., 33.75° and 57.25° (assuming the axes are limited to 16 degrees of rotation), in order to constantly ensure that R is at a minimum. For applications in which it is desirable to detect lines, and assuming the availability of 16 x-direction histogram formation units, it is advantageous to carry out the calculation of R simultaneously along all possible axes to determine the angle with the minimum R to determine the direction of orientation of the line. Because the x and y axes may be rotated independently, the x and y histogram formation units are capable of simultaneously independently detecting lines, such as each side line of a road, in the same manner.

Paragraph beginning on page 31, line 11:

As discussed above, the system of the invention may be used to search for objects within a bounded area defined by XMIN, XMAX, YMIN and YMAX. Because a moving object may leave the bounded area the system preferably includes an anticipation function which enables XMIN, XMAX, YMIN and YMAX to be automatically modified by the system to compensate for the speed and direction of the target. This is accomplished by determining values for O-MVT, corresponding to orientation (direction) of movement of the target within the bounded area using the direction histogram, and I-MVT, corresponding to the intensity (velocity) of movement. Using these parameters, controller 42 may modify the values of XMIN, XMAX, YMIN and YMAX on a frame-by-frame basis to ensure that the target remains in the bounded box being searched. These parameters also enable the system to determine when a moving object, e.g., a line, that is being tracked based upon its axis of rotation, will be changing its axis of orientation, and enable the system to anticipate a new orientation axis in order to maintain a minimized value of R.

Paragraph beginning on page 31, line 25:

Referring to Fig. 12, a controller 42, which is preferably a conventional microprocessor based controller, is used to control the various elements of the system and to enable user input of commands and controls, such as with a computer mouse and keyboard (not shown), or other input device. **[Components 11a]** Referring to Fig. 11, components 11 and 22a, and controller 42, are preferably formed on a single integrated circuit. Controller 42 is in communication with data bus 23, which allows controller 42 to run a program to control various parameters that may be set in the system and to analyze the results. In order to select the criteria of pixels to be tracked, controller 42 may also directly control the following: i) content of each register in classifiers 25b, ii) the content of each register in validation units **[31]** 30-35; iii) the content of XMIN, XMAX, YMIN and YMAX, iv) the orientation angle of each of the x and y axes, and v) semi-graphic memory 50. Controller 42 may also retrieve i) the content of each memory

100 and ii) the content of registers 112, in order to analyze the results of the histogram formation process. In addition, in general controller 42 may access and control all data and parameters used in the system.

Paragraph beginning on page 32, line 28:

The system of the invention utilizes a video camera or other sensor to receive images of the driver T in order to detect when the driver is falling asleep. While various methods of positioning the sensor shall be described, the sensor may generally be **[position]** positioned by any means and in any location that permits acquisition of a continuous image of the face of the driver when seated in the driver's seat. Thus, it is foreseen that sensor **[10]** 310 may be mounted to the vehicle or on the vehicle in any appropriate location, such as in or on the vehicle dashboard, steering wheel, door, rear-view mirror, ceiling, etc., to enable sensor **[10]** 310 to view the face of the driver. An appropriate lens may be mounted on the sensor **[10]** 310 to give the sensor a wider view if required to see drivers of different sizes.

Paragraph beginning on page 33, line 7:

Figs. 18 and 19 show a conventional rear-view mirror arrangement in which a driver T can see ahead along direction 301 and rearward (via rays 302a and 302b) through a rear-view mirror 303. Referring to Fig. 20, mirror 303 is attached to the vehicle body 305 through a connecting arm 304 which enables adjustment of vision axes 302a and 302b. Axes **[302a]** 301 and 302b are generally parallel and are oriented in the direction of the vehicle. Optical axis 306, which is perpendicular to the face 303a of mirror 303, divides the angle formed by axes 302a and 302b into equal angles a and b. Axis 307, which is perpendicular to axis 302b and therefore generally parallel to the attachment portion of vehicle body 305, defines an angle c between axis 307 and mirror face 303a which is generally equal to angles a and b. A camera or sensor 310 is preferably mounted to the mirror by means of a bracket 299. The camera may be mounted in any desired position to enable the driver to have a clear view of the road while enabling sensor 310 to acquire images of the face of the driver. Bracket 299 may

be an adjustable bracket, enabling the camera to be faced in a desired direction, i.e., toward the driver, or may be at a fixed orientation such that when the mirror is adjusted by drivers of different sizes, the camera continues to acquire the face of the driver. The signal from the camera is communicated to the image processing system, which operates as described below, by means of lead wires or the like (not shown in Figs. 18-20).

Paragraph beginning on page 33, line 25:

Figs. 21 and 22 show a rear-view mirror assembly 308 in which sensor 310 is mounted interior to the mirror assembly. Mirror assembly 308 is adapted so that as assembly 308 is adjusted by a driver, sensor 310 remains directed toward the face of the driver. Rear-view mirror assembly 308 includes a two-way mirror 309 having a face 309a, movably oriented to provide a rear view to the driver. Sensor 310, .which is preferably an electronic mini-camera or MOS sensor with a built-in lens, is axed to a bracket 311, is oriented facing the driver using a mechanical arrangement that enables sensor 310 to receive an image of the face of the driver when mirror 309 is adjusted so that the driver has a rear view of the vehicle. The mechanical arrangement consists of a Cardan type mechanical joint, which causes automatic adjustment of the bracket 311 when the driver **[when the driver]** adjusts the rear view mirror so that the receiving face 310a of sensor 310 receives the image of the face of the driver, i.e., optical axis 310b remains aligned toward the head of the driver.

Paragraph beginning on page 34, line 26:

Sensor 310 is connected by means of one or more lead wires 318 to image processor 319, which is preferably an image processing system of the type discussed above and is preferably in the form of an integrated circuit inside rear-view mirror assembly 308. In a preferred embodiment, image processing system 319 is integrally constructed with sensor 310. Alternatively, image processing system 319 may be located exterior to mirror assembly 308 by means of conventional lead wires. While controller **[310]** 319 is preferably a microprocessor, it is foreseen that controller **[310]** 319 may be an ASIC or simple controller designed to perform the functions specified herein,

particularly if the system is embedded, e.g. contained in a mirror assembly or integral with a vehicle.

Paragraph beginning on page 36, line 21:

As an alternative method of detecting the presence of the driver, if sensor **[10]** 310 is mounted in a manner that enables (or requires) that the sensor be adjusted toward the face of the driver prior to use, e.g., by adjustment of the rear-view mirror shown in Fig. 21, the system may activate an alarm until the sensor has acquired the face of the driver.

Paragraph beginning on page 36, line 25:

The driver may also be detected by using the image processing system to detect the driver entering the driver's seat. This assumes that the image processing system and sensor **[10]** 310 are already powered when the driver enters the vehicle, such as by connecting the image processing system and sensor to a circuit of the vehicle electrical system that has constant power. Alternatively, the system may be powered upon detecting the vehicle door open, etc. When the driver enters the driver's seat, the image from sensor **[10]** 310 will be characterized by many pixels of the image being in motion (DP=1), with CO having a relatively high value, moving in a lateral direction away from the driver's door. The pixels will also have hue characteristics of skin. In this embodiment, in a mode in which the system is trying to detect the presence of the driver, controller 42 sets the validation units to detect movement of the driver into the vehicle by setting the histogram formation units to detect movement **[characteristic]** characteristics of a driver entering the driver's seat. Most easily, controller 42 may set the validation units to detect DP=1, and analyze the histogram in the histogram formation unit for DP to detect movement indicative of a person entering the vehicle, e.g., NBPTS exceeding a threshold.

Paragraph beginning on page 37, line 10:

Fig. 23 shows the field of view 323 of sensor 310 between directions 323a and 323b where the head T of the driver is within, and is preferably centered in, conical field 323. Field 323 may be kept relatively narrow, given that the movements of the head T of the driver during driving are limited. Limitation of field **[23]** 323 improves the sensitivity of the system since the driver's face will be represented in the images received from sensor **[10]** 310 by a greater number of pixels, which improves the histogram formation process discussed below.

Paragraph beginning on page 39, line 1:

As illustrated in Fig. 24, the pixels having the selected characteristics are formed into histograms 324x and 324y along axes *Ox* and *Oy*, i.e., horizontal and vertical projections, respectively. Slight movements of the head of the driver having the characteristics selected are indicated as ripples 327a, 327b, 327c and 327d, which are shown in line form but which actually extend over a small area surrounding the periphery of the head. Peaks 325a and 325b of histogram 324x, and 325c and 325d of histogram 324y delimit, by their respective coordinates 326a, 326b, 326c and 326d, a frame bounded by straight lines *Ya, Yb, Xc, Xd*, which generally correspond to the area in which the face V of the driver is located. Controller 42 reads the histograms 324x and 324y from the histogram formation units, preferably during the blanking interval, and detects the locations of peaks 325a, 325b, 325c and 325d (408). In order to ensure that the head has been identified, the distance between peaks 325a and 325b and between peaks 325b and 325c are preferably tested to fall with a range corresponding to the normal ranges of human head sizes.

Paragraph beginning on page 39, line 15:

Once the location of coordinates 326a, 326b, 326c and 326d has been established, the area surrounding the face of the driver is masked from further processing (410). Referring to Fig. 25, this is accomplished by having controller 42 set XMIN, XMAX, YMIN and YMAX to correspond to *Xc, Xd, Ya*, and *Yb* respectively. This

masks the cross- hatched area surrounding face V from further consideration, which helps to eliminate background movement from affecting the ability of the system to detect the eye(s) of the driver. Thus, for subsequent analysis, only pixels in central area Z, framed by the lines *Xc, Xd, Ya, Yb* and containing face V are considered. As an alternative method of masking the area outside central area Z, controller 42 may set the semi-graphic memory 50 (Fig. 12) to mask off these areas. As indicated above, the semi-graphic memory may be used to mask off selected pixels of the image in individual or small rectangular groups. Since head V is not rectangular, use of the semi-graphic memory enables better masking around the rounded edges of the face to better eliminate background pixels from further consideration.

Paragraph beginning on page 40, line 6:

Once the frame has been established, a Centered-Face flag is set to "1" (412), and controller 42 initiates the process of reducing the frame size to more closely surround the eyes of the driver. Referring to Fig. 26, in which frame Z denotes the area bounded by *Ya, , Yb, Xc, Xd* determined in the prior step, controller 42 initially uses the usual anthropomorphic ratio between the zone of the eyes and the entire face for a human being, especially in the vertical direction, to reduce the area under consideration to cover a smaller zone Z' bounded by lines *Y'a, Y'b, X'c* and *X'd* that includes the eyes U of the driver. Thus, the pixels in the outer cross-hatched area of Fig. 27 **[is]** are eliminated from consideration and only the area within frame Z' is further considered. This is accomplished by having controller 42 set XMIN, XMAX, YMIN and YMAX to correspond to *X'c, X'd, Y'a*, and *Y'b* respectively (414). This masks the pixels in the area outside Z' from further consideration. Thus, for subsequent analysis, only pixels in area Z' containing eyes U are considered. As an alternative method of masking the area outside area Z', controller 42 may set the semi-graphic memory 50 to mask off these areas. It is foreseen that an anthropomorphic ratio may be used to set frame Z' around only a single eye, with detection of blinking being generally the same as described below, but for one eye only.

Paragraph beginning on page 41, line 14:

Fig. 27 illustrates histogram **[28*x*]** 328*x* along axis *Ox* and histogram **[28*y*]** 328*y* along axis *Oy* of the pixels with the selected criteria corresponding to the driver's eyelids, preferably DP=1 with vertical movement. Controller 42 analyzes the histogram and determines peaks **[29a, 29b, 29c and 29d]** 329a, 329b, 329c and 329d of the histogram. These peaks are used to determine horizontal lines *X"c* and *X"d* and vertical lines *Y"a* and *Y"b* which define an area of movement of the eyelids Z", the movements of the edges of which are indicated at **[30a]** 330a and **[30b]** 330b for one eye and **[30c]** 330c and **[30d]** 330d for the other eye (424). The position of the frame bounded by *Y"a, Y"b, X"c, X"d* is preferably determined and updated by time-averaging the values of peaks **[29a, 29b, 29c and 29d]** 329a, 329b, 329c and 329d, preferably every ten frames or less. Once the eyes have been detected and frame Z" has been established an Eye Centered flag is set to "1" (426) and only pixels within frame Z" are thereafter processed.

Paragraph beginning on page 42, line 3:

Fig. 29A illustrates on curve C the variation over time of the number of pixels in each frame having the selected criteria, e.g., DP = 1, wherein successive peaks P1, P2, P3 correspond to successive blinks. This information is determined by controller 42 by reading NBPTS of the *x* and/or *y* histogram formation units. Alternatively, controller 42 may analyze the *x* and/or *y* histograms of the histogram formation units (Fig. 27) to detect peaks **[29a]** 329a and **[29b]** 329b and/or **[29c]** 329c and **[29d]** 329d, which over time will exhibit graph characteristics similar to those shown in Fig. 29A.

Paragraph beginning on page 42, line 10:

Controller 42 analyzes the data in Fig. 29A over time to determine the location and timing of peaks in the graph (428). This may be done, for example, as shown in Fig. 29B, by converting the graph shown in Fig. 29A into a binary data stream, in which all **[pixels]** pixel counts over a threshold are set to "1", and all pixel counts below the threshold are set to "0" (vertical dashes **[31]** 331), in order to convert peaks P1, P2, P3 to framed rectangles R1, R2 R3, respectively. Finally, Fig. 29B shows the lengths

of each blink (5, 6, and 5 frames respectively for blinks P1, P2 and P3) and the time intervals (14 and 17 frames for the intervals between blinks P1 and P2, and P2 and P3 respectively). This information is determined by controller 42 through an analysis of the peak data over time.

Paragraph beginning on page 42, line 28:

Figs. 31 - 36 show an alternative method by which the generic image processing system may be used to detect a driver falling asleep. Initially, controller 42 is placed in a search mode (350) (Fig. 35), in which controller 42 **[is]** scans the image to detect one or more image. It is also foreseen that the entire image may be **[search]** searched at once for the nostrils, if desired.

Paragraph beginning on page 45, line 3:

In the present example, only a single eye is analyzed to determine when the driver is falling asleep. In this case the shadow of the eye in the open and closed positions is used to determine from the shape of the shadow whether the eye is open or closed. As discussed above, for night-time applications, the invention is preferably used in combination with a short-wave IR light source. For the presently described example, the IR light source is preferably positioned above the driver at a position to cast a shadow having a shape capable of **[detected]** detection by the system. The anthropomorphic model is preferably adaptive to motion, to features of the driver, and to angular changes of the driver relative to the sensor.

Paragraph beginning on page 45, line 12:

Referring to Fig. 32, having determined the location of the nostrils 272 of the driver having a center position X_N, Y_N, a search box 276 is established around an eye 274 of the driver (366). The location of search box 276 is set using an anthropomorphic model, wherein the spatial relationship between the eyes and nose of humans is known. Controller 42 sets XMIN, XMAX, YMIN, and YMAX to search within the area defined by search box 276. Controller 42 further sets the luminance and x and y direction

histograms to be on, with the linear combination unit for luminance set to detect low histogram levels relative to the rest of the image, e.g., the lowest 15% of the luminance levels (368). As a confirmation of the detection of the nostrils or other facial feature being detected, search box 276, which is established around an eye **[274]** of the driver using an anthropomorphic model, may be analyzed for characteristics indicative of an eye present in the search box. These characteristics may include, for example, a moving eyelid, a pupil, iris or cornea, a shape corresponding to an eye, a shadow corresponding to an eye, or any other indica indicative of an eye. Controller 42 sets the histogram formation units to detect the desired criteria. For example, Fig. 36 shows a sample histogram of a pupil 432, in which the linear combination units and validation units are set to detect pixels with very low luminance levels and high gloss that are characteristic of a pupil. The pupil may be verified by comparing the shapes of the x and y histograms to known characteristics of the pupil, which are generally symmetrical, keeping in mind that the symmetry may be affected by the angular relationship between the sensor and the head of the driver.

In the Claims

Claims 1, 2, 3, 7, 9-12, 23 and 39 have been amended as follows:

1. (Amended) A process of detecting a person falling asleep, the process comprising **[the steps of]**:

acquiring an image of the face **[(V)]** of the person;

identifying a sub-area of the image comprising at least one eye of the person, including:

identifying the head of the person in the image; and

identifying the sub-area of the image using an anthropomorphic model;

selecting pixels within the sub-area of the image having characteristics corresponding to characteristics of the at least one eye of the person;

forming at least one histogram **[(328*x*)]** of the selected pixels;

analyzing the at least one histogram **[(328*x*)]** over time to identify each opening and closing of the eye; and

determining from the opening and closing information **[on]** of the eye, characteristics indicative of a person falling asleep**[;]**.

[identifying a sub-area of the image comprising the at least one eye prior the step of step of selecting pixels of the image having characteristics corresponding to characteristics of at least one eye, this step of selecting pixels comprising selecting pixels within the sub-area of the image, comprising the steps of:

identifying the head of the person in the image; and

identifying the sub-area of the image using an anthropomorphic model;]

2. (Amended) The process according to claim 1 wherein **[the step of]** identifying the head of the person in the image comprises **[the steps of]**:

selecting pixels of the image having characteristics corresponding to edges of the head of the person;

forming histograms **[(328x, 328y)]** of the selected pixels projected onto forthogonal axes; and

analyzing the histograms of the selected pixels to identify the edges of the head of the person.

3. (Amended) **[The]** A process of detecting a person falling asleep, the process comprising **[the steps of]**:

acquiring an image of the face **[V]** of the person;

identifying a sub-area of the image comprising at least one eye of the person, including:

identifying the location of a facial characteristic of the person in the image; and

identifying the sub-area of the image using an anthropomorphic model and the location of the facial characteristic;

selecting pixels within the sub-area of the image having characteristics corresponding to characteristics of the at least one eye of the person;

forming at least one histogram **[(328x)]** of the selected pixels;,

analyzing the at least one histogram over time to identify each opening and closing of the eye; and

determining from the opening and closing information **[on]** of the eye, characteristics indicative of a person falling asleep**[;]**.

[identifying a sub-area of the image comprising the at least one eye prior to the step selecting pixels of the image having characteristics corresponding to characteristics of at least one eye, and wherein the step of selecting pixels of the image having characteristics corresponding to characteristics of at least one eye comprises selecting pixels within the sub-area of the image;

identifying the location of a facial characteristic of the person in the image; and

identifying the sub-area of the image using an anthropomorphic model and the location of the facial characteristic.]

7. (Amended) **[The]** A process of detecting a person falling asleep, the process comprising the steps of

acquiring an image of the face **[(V)]** of the person;

selecting pixels of the image having characteristics corresponding to characteristics of at least one eye of the person;

forming at least one histogram **[(328x)]** of the selected pixels;

analyzing the at least one histogram over time to identify each opening and closing of the eye; and

determining from the opening and closing information **[on]** of the eye, characteristics indicative of a person falling asleep;

wherein the step of selecting pixels of the image **[having characteristics corresponding to characteristics of at least one eye of the person]** comprises selecting pixels having low luminance levels corresponding to shadowing of the eye; and

wherein the step of analyzing the at least one histogram **[over time to identify each opening and closing of the eye]** comprises analyzing the shape of the eye shadowing to determine openings and closings of the eye.

9. (Amended) **[The]** A process of detecting a person falling asleep, the process comprising the steps of:

acquiring an image of the face **[V]** of the person;

selecting pixels of the image having characteristics corresponding to characteristics of at least one eye of the person;

forming at least one histogram **[(328x)]** of the selected pixels;

analyzing the at least one histogram over time to identify each opening and closing of the eye; and

determining from the opening and closing information **[on]** of the eye, characteristics indicative of a person falling asleep;

wherein the step of selecting pixels of the image **[having characteristics corresponding to characteristics of at least one eye of the person]** comprises selecting pixels in movement corresponding to blinking; and

wherein the step of analyzing the at least one histogram **[over time to identify each opening and closing of the eye]** comprises analyzing the number of pixels in movement over time to determine openings and closings of the eye.

10. (Amended) The process according to claim 9 wherein the step of selecting pixels of the image having characteristics corresponding to characteristics of at least one eye of the person comprises selecting pixels having one or more characteristics selected from the group consisting of i) parameter DP= 1 indicative of significant variation, ii) time constant CO indicative of a blinking eyelid, iii) velocity indicative of a blinking eyelid, and iv) up and down movement indicative of a blinking eyelid.

11. (Amended) The process according to claim 3 wherein the step of identifying the location of a facial characteristic of the person in the image comprises the step of searching sub-images of the image to identify the facial characteristic.

12. The process according to claim 5 wherein the step of identifying the location of a facial characteristic of the person in the image comprises the step of searching sub-images of the image to identify the nostrils.

23. (Amended) The apparatus according to claim 22 wherein the histogram formation units selects pixels of the image having characteristics of movement corresponding to blinking, such characteristics being selected from the group consisting of i) parameter DP =1 indicative of significant variation, ii) time constant CO indicative of a blinking eyelid, iii) velocity indicative of a blinking eyelid, and iv) up and down movement indicative of a blinking eyelid.

39. (Amended) A process of detecting a feature of an eye, the process comprising the steps of:

acquiring an image of the face of the person, the image comprising pixels corresponding to the feature to be detected;

identifying a characteristic of the face other than the feature to be detected;

identifying a portion of the image of the face comprising the feature to be detected using an anthropomorphic model based on the location of the identified facial characteristic;

selecting pixels of the portion of the image having characteristics corresponding to the feature to be detected;

forming at least one histogram of the selected pixels; and

analyzing the at least one histogram over time to identify characteristics **[indicative]** of the feature to be detected**[.]**;

said feature being the iris, pupil or cornea.

OIPE JC41 FEB 10 2003 PATENT & TRADEMARK OFFICE

Part of #10

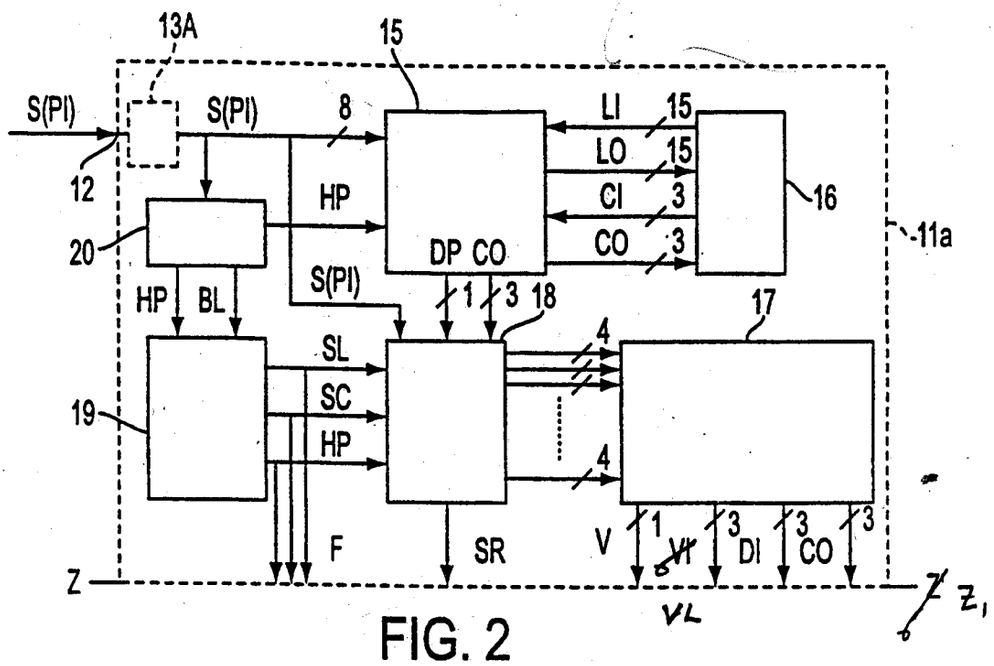

Approved TM 11-24-03

FIG. 2

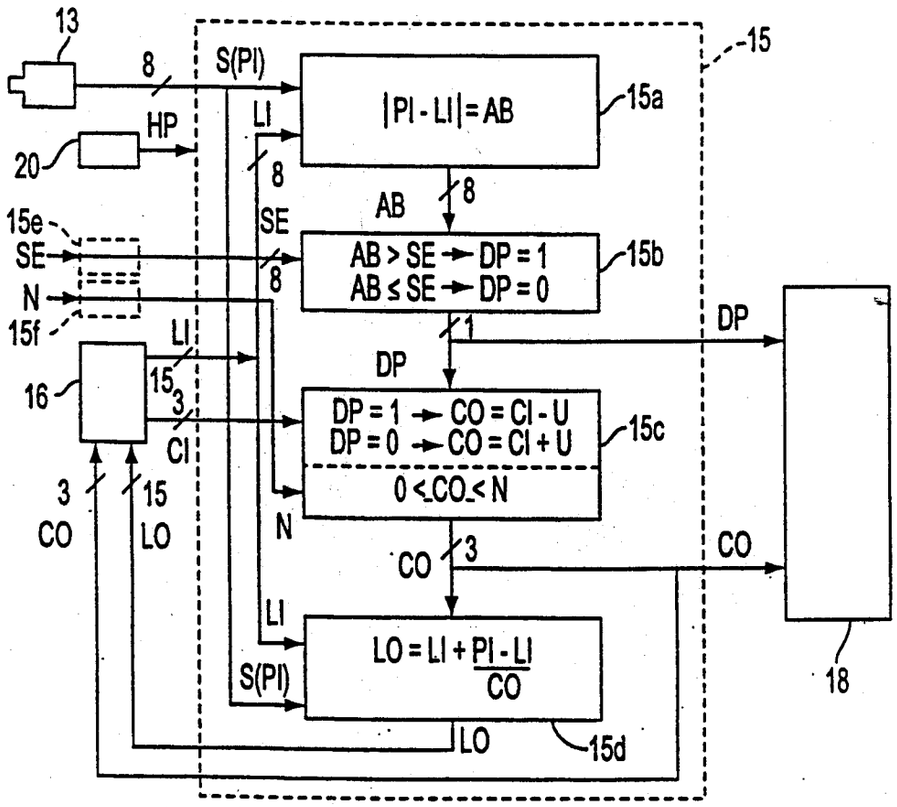

FIG. 3

SAMSUNG EXHIBIT 1004
Page 378 of 404

OIPE JC41 FEB 10 2003 PATENT & TRADEMARK OFFICE

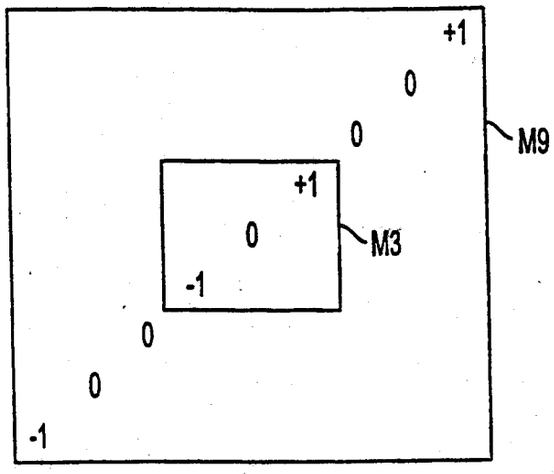

FIG. 7

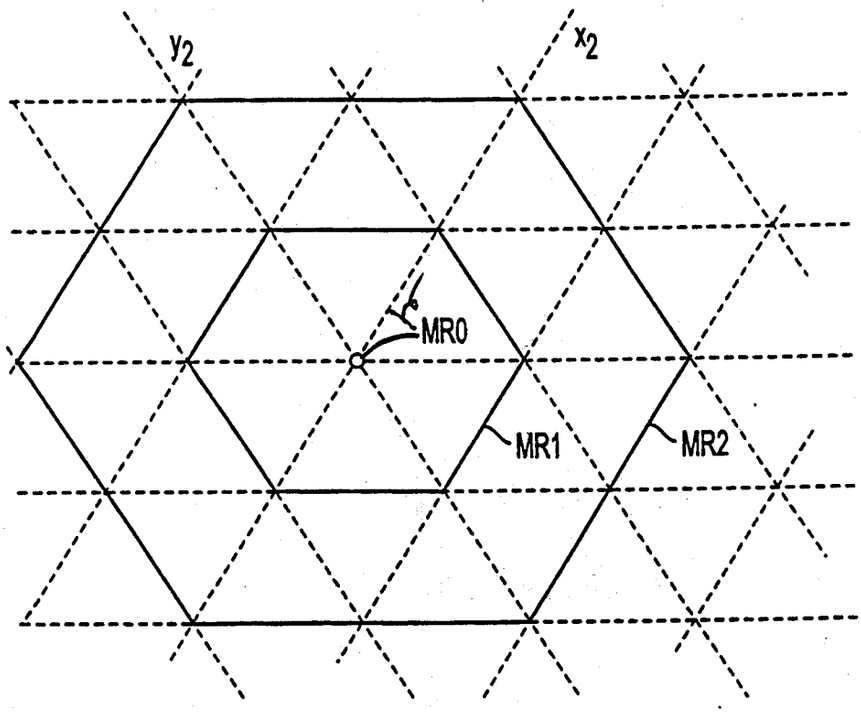

FIG. 8

OIPE JC41 FEB 10 2003 PATENT & TRADEMARK OFFICE

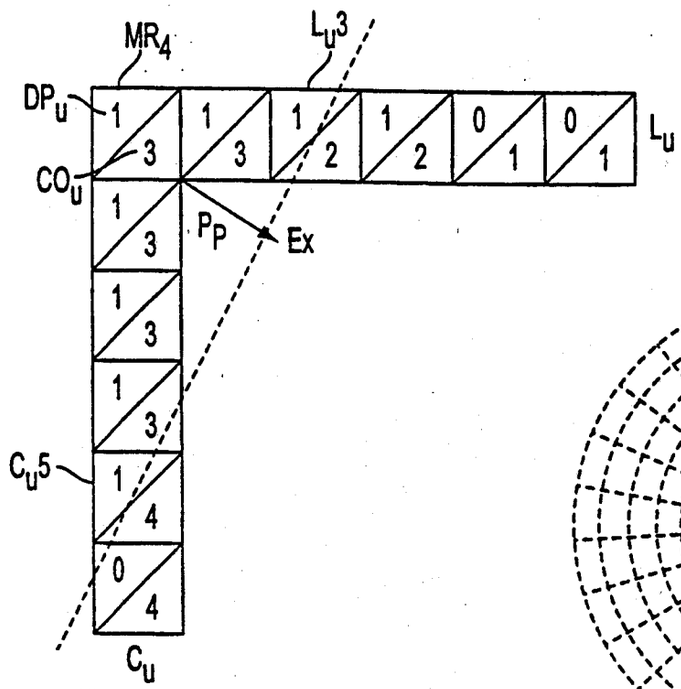

FIG. 9

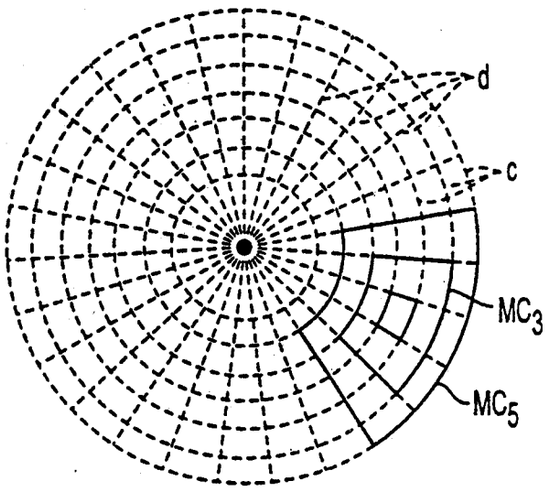

FIG. 10

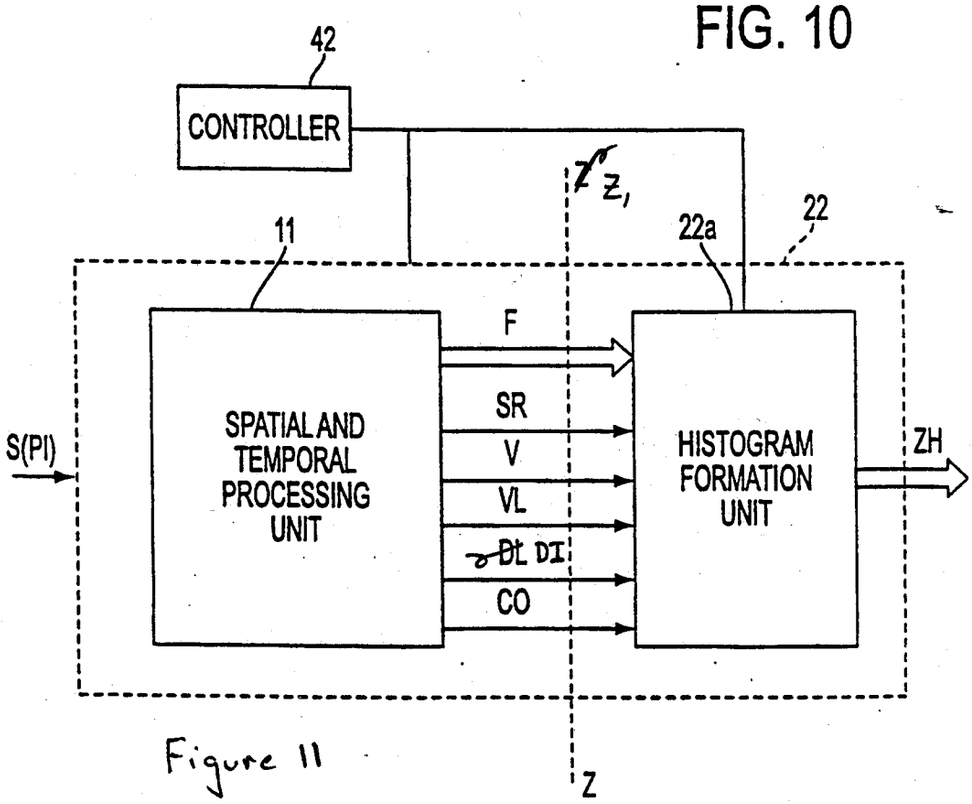

Figure 11

SAMSUNG EXHIBIT 1004
Page 380 of 404

OIPE JC41 FEB 10 2003 PATENT & TRADEMARK OFFICE

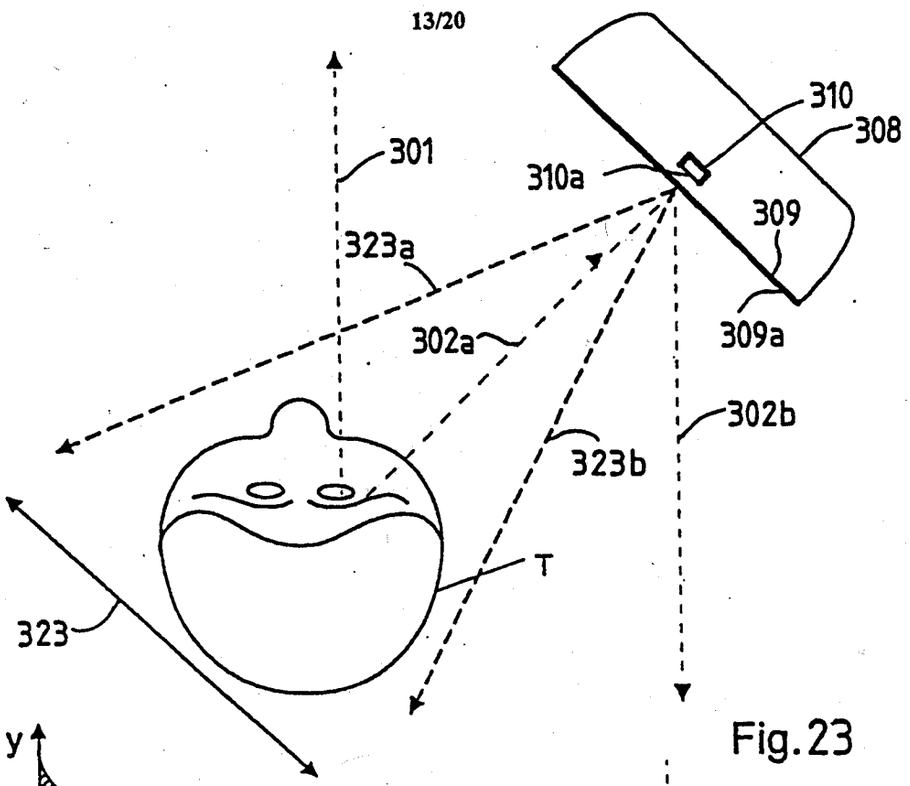

Fig.23

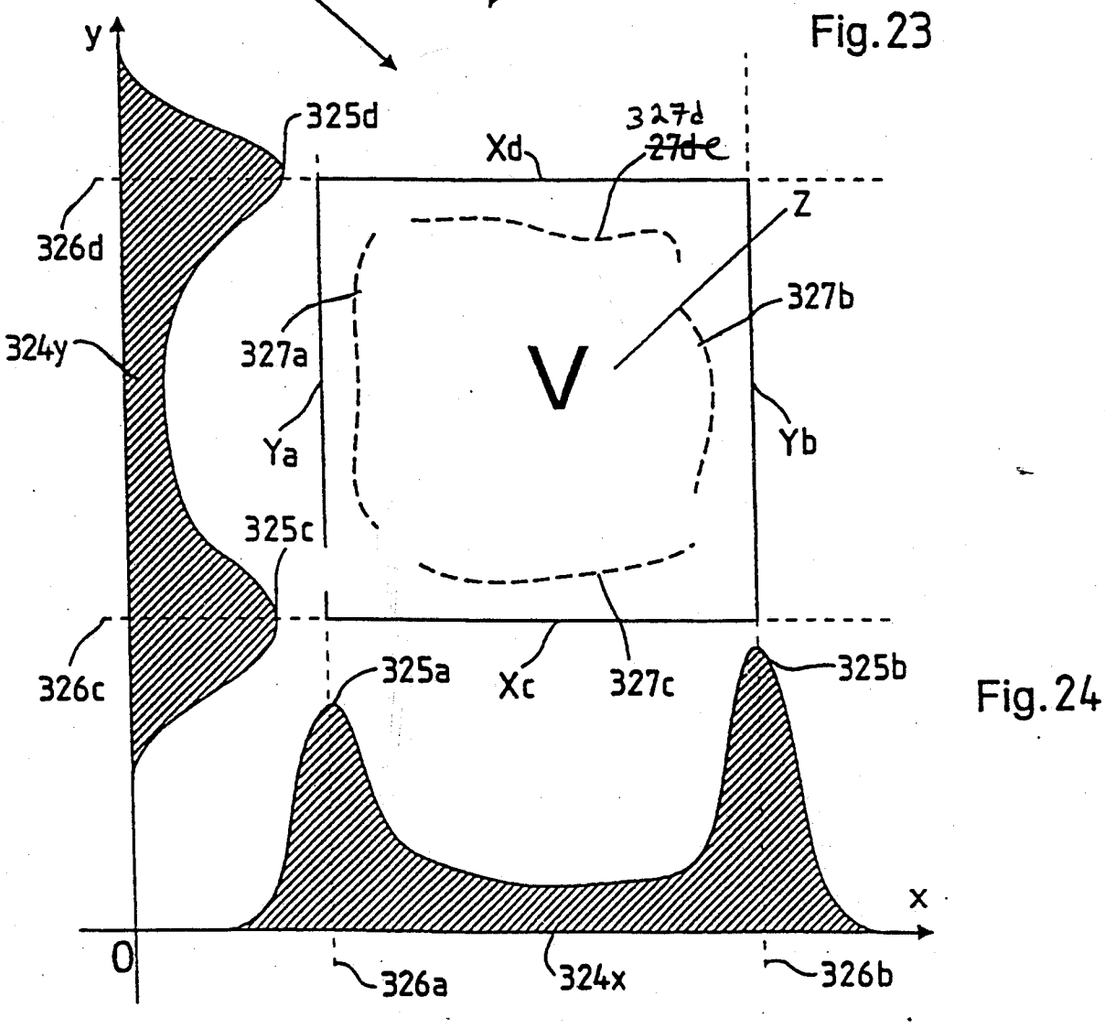

Fig.24

OIPE JC41
FEB 10 2003
PATENT & TRADEMARK OFFICE

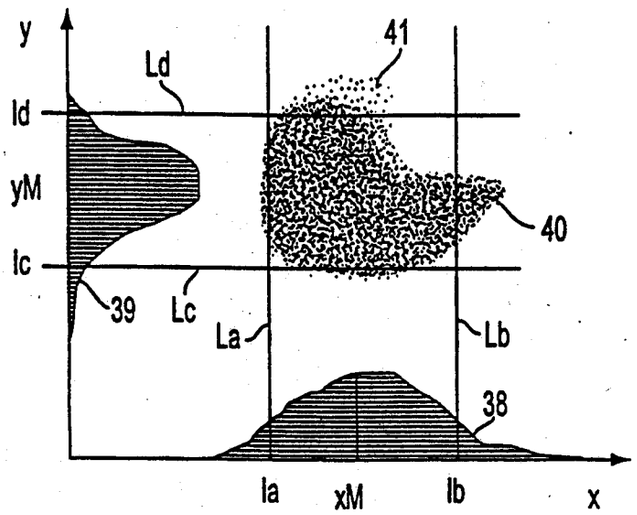

FIG. 13

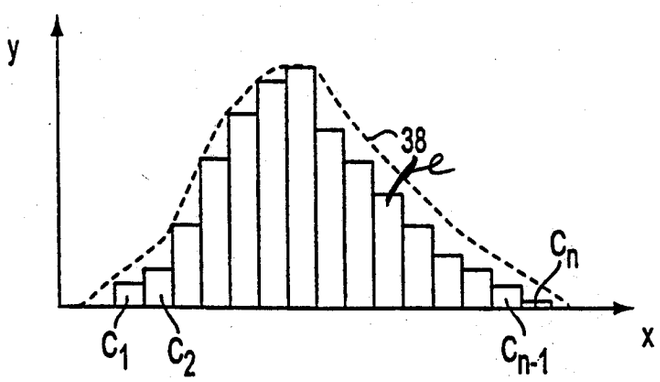

FIG. 16

SAMSUNG EXHIBIT 1004
Page 382 of 404

OIPE JC41 FEB 10 2003 PATENT & TRADEMARK OFFICE

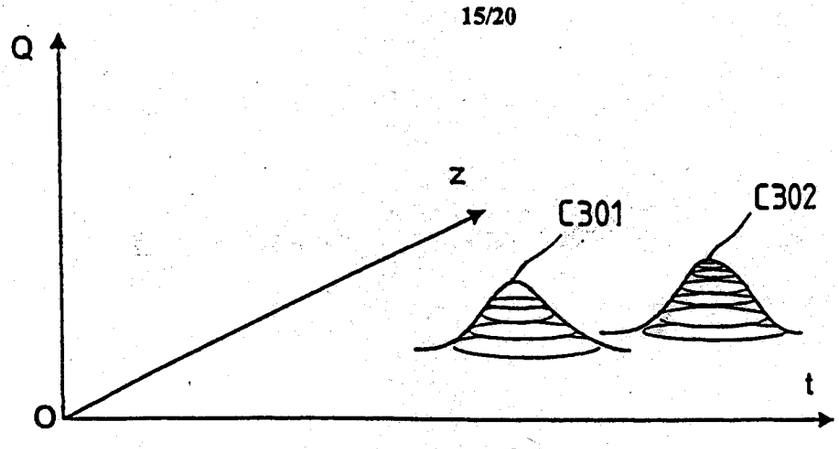

Fig. 28

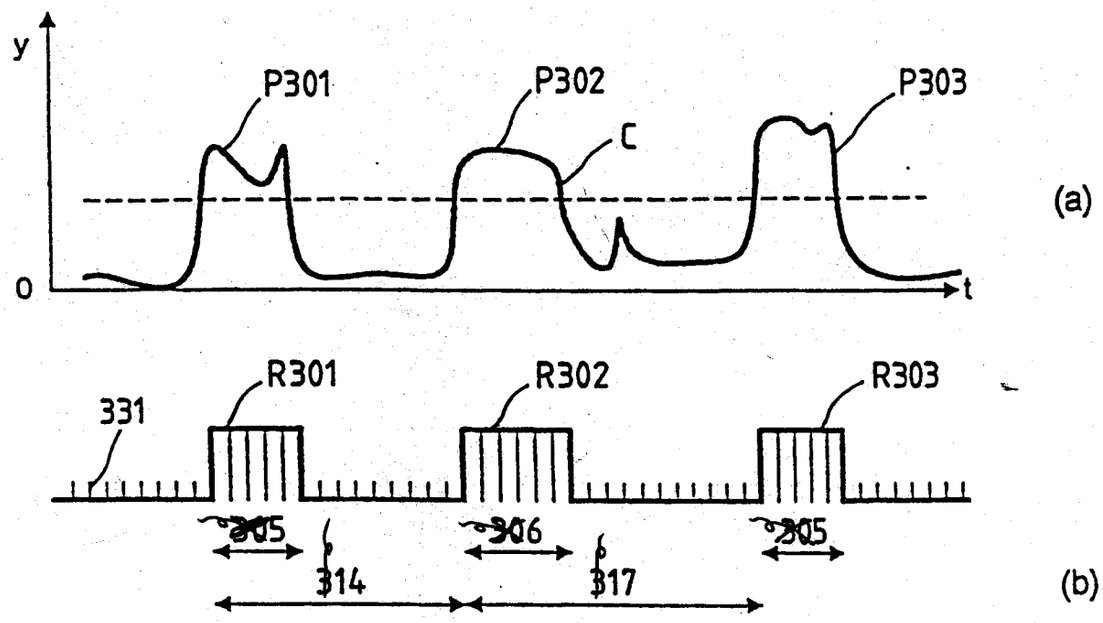

Fig. 29

UNITED STATES PATENT AND TRADEMARK OFFICE

UNITED STATES DEPARTMENT OF COMMERCE
United States Patent and Trademark Office
Address: COMMISSIONER OF PATENTS AND TRADEMARKS
Washington, D.C. 20231
www.uspto.gov

APPLICATION NO.	FILING DATE	FIRST NAMED INVENTOR	ATTORNEY DOCKET NO.	CONFIRMATION NO.
09/600,390	02/09/2001	Patrick Pirim	20046H-00060	7078

7590 03/31/2003

Babak S Sani
Townsend and Townsend and Crew
Two Embarcadero Center 8th Floor
San Francisco, CA 94111

EXAMINER	
MULLEN, THOMAS J	
ART UNIT	PAPER NUMBER
2632	11

DATE MAILED: 03/31/2003

Please find below and/or attached an Office communication concerning this application or proceeding.

UNITED STATES DEPARTMENT OF COMMERCE
Patent and Trademark Office
Address: ASSISTANT COMMISSIONER FOR PATENTS
Washington, D.C. 20231

APPLICATION NO./ CONTROL NO.	FILING DATE	FIRST NAMED INVENTOR / PATENT IN REEXAMINATION	ATTORNEY DOCKET NO.

EXAMINER	
ART UNIT	PAPER
	11

DATE MAILED:

Please find below and/or attached an Office communication concerning this application or proceeding.

Commissioner of Patents and Trademarks

SEE ATTACHED. —TM 3/29/03

PTO-90C (Rev.3-98)

1. The reply filed on 2/10/03 is not fully responsive to the prior Office Action because of the following omission(s) or matter(s): In the specification, the content of the replacement paragraph "beginning on page 2, line 23" (see page 2 of the response) starts with the last 3 lines of the page numbered "1a"; skips the page numbered "2"; and ends with the first 6 lines of the page numbered "3". Thus, this paragraph needs to be resubmitted such that it includes the first 16 lines of the page numbered "2" instead of the first 6 lines of the page numbered "3". See 37 CFR 1.111. Since the above-mentioned reply appears to be *bona fide*, applicant is given **ONE (1) MONTH or THIRTY (30) DAYS** from the mailing date of this notice, whichever is longer, within which to supply the omission or correction in order to avoid abandonment. EXTENSIONS OF THIS TIME PERIOD MAY BE GRANTED UNDER 37 CFR 1.136(a).

2. Any inquiry concerning this communication or earlier communications from the examiner should be directed to Tom Mullen whose telephone number is (703) 305-4382. The examiner can normally be reached on Mon-Thur from 6:30AM to 4:00PM. The examiner can also be reached on alternate Fridays (6:30-3:00).

If attempts to reach the examiner by telephone are unsuccessful, the examiner's acting supervisor, Daniel Wu, can be reached on (703) 308-6730.

Any inquiry of a general nature or relating to the status of this application or proceeding should be directed to the Group receptionist whose telephone number is (703) 305-4700.

Any response to this action should be mailed to:
Commissioner of Patents and Trademarks
Washington, D.C. 20231

or faxed to:
(703) 872-9314

Hand-delivered responses should be brought to Crystal Park II, 2121 Crystal Drive, Arlington. VA., Sixth Floor (Receptionist).

T. Mullen
March 29, 2003

Thomas J. Mullen, Jr.
Primary Examiner
Art Unit 2632

OIPE JC41
APR 15 2003
PATENT & TRADEMARK OFFICE

2632

PATENT

Attorney Docket No.: 20046H-000600US
Client Ref. No.: 048J US 3714

I hereby certify that this correspondence is being deposited with the United States Postal Service as first class mail in an envelope addressed to:

Assistant Commissioner for Patents
Washington, D.C. 20231

On 4/10/03

TOWNSEND and TOWNSEND and CREW LLP

By: Jennifer K. Hardi

11-14-03

IN THE UNITED STATES PATENT AND TRADEMARK OFFICE

In re application of:

PATRICK PIRIM, et al.

Application No.: 09/600,390

Filed: February 9, 2001

For: METHOD AND APPARATUS FOR DETECTION OF DROWSINESS

Examiner: Thomas J. Mullen

Art Unit: 2632

AMENDMENT

RECEIVED
APR 16 2003
Technology Center 2600

Assistant Commissioner for Patents
Washington, D.C. 20231

Sir:

In response to the Office Action mailed March 31, 2003, please enter the following amendments.

IN THE SPECIFICATION:

Please amend the indicated paragraphs to read as follows:

Paragraph beginning on page 1a, line 23:

--Commonly-owned PCT Application Serial Nos. PCT/FR97/01354 and PCT/EP98/05383 disclose a generic image processing system that operates to localize objects in relative movement in an image and to determine the speed and direction of the objects in real-time. Each pixel of an image is smoothed using its own time constant. A binary value corresponding to the existence of a significant variation in the amplitude of

B1 Cont.

87

the smoothed pixel from the prior frame, and the amplitude of the variation, are determined, and the time constant for the pixel is updated. For each particular pixel, two matrices are formed that include a subset of the pixels spatially related to the particular pixel. The first matrix contains the binary values of the subset of pixels. The second matrix contains the amplitude of the variation of the subset of pixels. In the first matrix, it is determined whether the pixels along an oriented direction relative to the particular pixel have binary values representative of significant variation, and, for such pixels, it is determined in the second matrix whether the amplitude of these pixels varies in a known manner indicating movement in the oriented direction. In domains that include luminance, hue, saturation, speed, oriented direction, time constant, and x and y position, a histogram is formed of the values in the first and second matrices falling in user selected combinations of such domains. Using the histograms, it is determined whether there is an area having the characteristics of the selected combinations of domains.--

B1 cont'd

REMARKS

In the Amendment filed on February 5, 2003, Applicants incorrectly amended a portion of the specification. In particular, a replacement paragraph was submitted to replace the paragraph beginning on page 2, line 23. However, this should have indicated that the paragraph beginning on page 1a, line 23 was to be replaced, not page 2, line 23. The submitted replacement paragraph also skipped the material in page 2 and continued directly to the first 6 lines of page 3.

After a further review, Applicants' undersigned representative notes that no errors were found in the paragraph beginning at page 1a, line 23, (and continuing to page 2) and no errors were requested to be corrected therein in the previous Office Action mailed October 8, 2002. Please, therefore, cancel any and all changes made in the previously submitted replacement paragraph for the paragraph beginning at page 1a, line 23, by replacing said paragraph with the originally filed version as submitted herein.

88

Applicants thank the Examiner for identifying this unintended error.

CONCLUSION

In view of the foregoing, Applicants believe all claims now pending in this Application are in condition for allowance. The issuance of a formal Notice of Allowance at an early date is respectfully requested.

If the Examiner believes a telephone conference would expedite prosecution of this application, please telephone the undersigned at 925-472-5000.

Respectfully submitted,

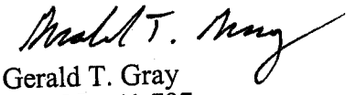

Gerald T. Gray
Reg. No. 41,797

TOWNSEND and TOWNSEND and CREW LLP
Two Embarcadero Center, 8th Floor
San Francisco, California 94111-3834
Tel: 925-472-5000
Fax: 415-576-0300
GTG:gtg
WC 9055999 v1

OIPE JC41
APR 15 2003
PATENT & TRADEMARK OFFICE

VERSION WITH MARKINGS TO SHOW CHANGES MADE

Please replace the indicated paragraphs as follows:

Paragraph beginning on page 1a, line 23:

Commonly-owned PCT Application Serial Nos. PCT/FR97/01354 and PCT/EP98/05383 disclose a generic image processing system that operates to localize

[the driver, or a facial characteristic of the driver, such as the driver's nostrils, and then identify the sub-area of the image using an anthropomorphic model. The head of the driver may be identified by selecting pixels of the image having characteristics corresponding to edges of the head of the driver. Histograms of the selected pixels of the edges of the driver's head are projected onto orthogonal axes. These histograms are then analyzed to identify the edges of the driver's head.] objects in relative movement in an image and to determine the speed and direction of the objects in real-time. Each pixel of an image is smoothed using its own time constant. A binary value corresponding to the existence of a significant variation in the amplitude of the smoothed pixel from the prior frame, and the amplitude of the variation, are determined, and the time constant for the pixel is updated. For each particular pixel, two matrices are formed that include a subset of the pixels spatially related to the particular pixel. The first matrix contains the binary values of the subset of pixels. The second matrix contains the amplitude of the variation of the subset of pixels. In the first matrix, it is determined whether the pixels along an oriented direction relative to the particular pixel have binary values representative of significant variation, and, for such pixels, it is determined in the second matrix whether the amplitude of these pixels varies in a known manner indicating movement in the oriented direction. In domains that include luminance, hue, saturation, speed, oriented direction, time constant, and x and y position, a histogram is formed of the values in the first and second matrices falling in user selected combinations of such domains. Using the histograms, it is determined whether there is an area having the characteristics of the selected combinations of domains.

SAMSUNG EXHIBIT 1004
Page 390 of 404

Notice of Allowability	Application No. 09/600,390	Applicant(s) PIRIM ET AL.	
	Examiner Thomas J. Mullen, Jr.	Art Unit 2632	

-- The MAILING DATE of this communication appears on the cover sheet with the correspondence address--

All claims being allowable, PROSECUTION ON THE MERITS IS (OR REMAINS) CLOSED in this application. If not included herewith (or previously mailed), a Notice of Allowance (PTOL-85) or other appropriate communication will be mailed in due course. **THIS NOTICE OF ALLOWABILITY IS NOT A GRANT OF PATENT RIGHTS.** This application is subject to withdrawal from issue at the initiative of the Office or upon petition by the applicant. See 37 CFR 1.313 and MPEP 1308.

1. ☒ This communication is responsive to *the amendment filed 4/15/03*.
2. ☒ The allowed claim(s) is/are *1-39*.
3. ☐ The drawings filed on _____ are accepted by the Examiner.
4. ☒ Acknowledgment is made of a claim for foreign priority under 35 U.S.C. § 119(a)-(d) or (f).
   a) ☒ All b) ☐ Some* c) ☐ None of the:
      1. ☐ Certified copies of the priority documents have been received.
      2. ☐ Certified copies of the priority documents have been received in Application No. _____ .
      3. ☒ Copies of the certified copies of the priority documents have been received in this national stage application from the International Bureau (PCT Rule 17.2(a)).

   * Certified copies not received: _____.
5. ☐ Acknowledgment is made of a claim for domestic priority under 35 U.S.C. § 119(e) (to a provisional application) since a specific reference was included in the first sentence of the specification or in an Application Data Sheet. 37 CFR 1.78.
   (a) ☐ The translation of the foreign language provisional application has been received.
6. ☐ Acknowledgment is made of a claim for domestic priority under 35 U.S.C. §§ 120 and/or 121 since a specific reference was included in the first sentence of the specification or in an Application Data Sheet. 37 CFR 1.78.

Applicant has THREE MONTHS FROM THE "MAILING DATE" of this communication to file a reply complying with the requirements noted below. Failure to timely comply will result in ABANDONMENT of this application. **THIS THREE-MONTH PERIOD IS NOT EXTENDABLE.**

7. ☐ A SUBSTITUTE OATH OR DECLARATION must be submitted. Note the attached EXAMINER'S AMENDMENT or NOTICE OF INFORMAL PATENT APPLICATION (PTO-152) which gives reason(s) why the oath or declaration is deficient.
8. ☒ CORRECTED DRAWINGS (as "replacement sheets") must be submitted.
   (a) ☐ including changes required by the Notice of Draftsperson's Patent Drawing Review (PTO-948) attached
      1) ☐ hereto or 2) ☐ to Paper No. ____.
   (b) ☒ including changes required by the proposed drawing correction filed *10 February 2003*, which has been approved by the Examiner.
   (c) ☐ including changes required by the attached Examiner's Amendment / Comment or in the Office action of Paper No. _____.

   Identifying indicia such as the application number (see 37 CFR 1.84(c)) should be written on the drawings in the front (not the back) of each sheet. Replacement sheet(s) should be labeled as such in the margin according to 37 CFR 1.121(d).
9. ☐ DEPOSIT OF and/or INFORMATION about the deposit of BIOLOGICAL MATERIAL must be submitted. Note the attached Examiner's comment regarding REQUIREMENT FOR THE DEPOSIT OF BIOLOGICAL MATERIAL.

Attachment(s)

1☐ Notice of References Cited (PTO-892)
2☐ Notice of Draftperson's Patent Drawing Review (PTO-948)
3☐ Information Disclosure Statements (PTO-1449 or PTO/SB/08), Paper No. _____
4☐ Examiner's Comment Regarding Requirement for Deposit of Biological Material
5☐ Notice of Informal Patent Application (PTO-152)
6☐ Interview Summary (PTO-413), Paper No._____ .
7☐ Examiner's Amendment/Comment
8☐ Examiner's Statement of Reasons for Allowance
9☐ Other

Thomas J. Mullen, Jr.
Primary Examiner
Art Unit: 2632
703 305 4382

UNITED STATES PATENT AND TRADEMARK OFFICE

UNITED STATES DEPARTMENT OF COMMERCE
United States Patent and Trademark Office
Address: COMMISSIONER FOR PATENTS
P.O. Box 1450
Alexandria, Virginia 22313-1450
www.uspto.gov

NOTICE OF ALLOWANCE AND FEE(S) DUE

7590 11/25/2003

Babak S Sani
Townsend and Townsend and Crew
Two Embarcadero Center 8th Floor
San Francisco, CA 94111

EXAMINER
MULLEN, THOMAS J

ART UNIT	PAPER NUMBER
2632	

DATE MAILED: 11/25/2003

APPLICATION NO.	FILING DATE	FIRST NAMED INVENTOR	ATTORNEY DOCKET NO.	CONFIRMATION NO.
09/600,390	02/09/2001	Patrick Pirim	20046H-00060	7078

TITLE OF INVENTION: METHOD AND APPARATUS FOR DETECTION OF DROWSINESS

APPLN. TYPE	SMALL ENTITY	ISSUE FEE	PUBLICATION FEE	TOTAL FEE(S) DUE	DATE DUE
nonprovisional	NO	$1330	$0	$1330	02/25/2004

THE APPLICATION IDENTIFIED ABOVE HAS BEEN EXAMINED AND IS ALLOWED FOR ISSUANCE AS A PATENT. PROSECUTION ON THE MERITS IS CLOSED. THIS NOTICE OF ALLOWANCE IS NOT A GRANT OF PATENT RIGHTS. THIS APPLICATION IS SUBJECT TO WITHDRAWAL FROM ISSUE AT THE INITIATIVE OF THE OFFICE OR UPON PETITION BY THE APPLICANT. SEE 37 CFR 1.313 AND MPEP 1308.

THE ISSUE FEE AND PUBLICATION FEE (IF REQUIRED) MUST BE PAID WITHIN THREE MONTHS FROM THE MAILING DATE OF THIS NOTICE OR THIS APPLICATION SHALL BE REGARDED AS ABANDONED. THIS STATUTORY PERIOD CANNOT BE EXTENDED. SEE 35 U.S.C. 151. THE ISSUE FEE DUE INDICATED ABOVE REFLECTS A CREDIT FOR ANY PREVIOUSLY PAID ISSUE FEE APPLIED IN THIS APPLICATION. THE PTOL-85B (OR AN EQUIVALENT) MUST BE RETURNED WITHIN THIS PERIOD EVEN IF NO FEE IS DUE OR THE APPLICATION WILL BE REGARDED AS ABANDONED.

HOW TO REPLY TO THIS NOTICE:

I. Review the SMALL ENTITY status shown above.

If the SMALL ENTITY is shown as YES, verify your current SMALL ENTITY status:
A. If the status is the same, pay the TOTAL FEE(S) DUE shown above.

B. If the status is changed, pay the PUBLICATION FEE (if required) and twice the amount of the ISSUE FEE shown above and notify the United States Patent and Trademark Office of the change in status, or

If the SMALL ENTITY is shown as NO:

A. Pay TOTAL FEE(S) DUE shown above, or

B. If applicant claimed SMALL ENTITY status before, or is now claiming SMALL ENTITY status, check the box below and enclose the PUBLICATION FEE and 1/2 the ISSUE FEE shown above.

☐ Applicant claims SMALL ENTITY status. See 37 CFR 1.27.

II. PART B - FEE(S) TRANSMITTAL should be completed and returned to the United States Patent and Trademark Office (USPTO) with your ISSUE FEE and PUBLICATION FEE (if required). Even if the fee(s) have already been paid, Part B - Fee(s) Transmittal should be completed and returned. If you are charging the fee(s) to your deposit account, section "4b" of Part B - Fee(s) Transmittal should be completed and an extra copy of the form should be submitted.

III. All communications regarding this application must give the application number. Please direct all communications prior to issuance to Mail Stop ISSUE FEE unless advised to the contrary.

IMPORTANT REMINDER: Utility patents issuing on applications filed on or after Dec. 12, 1980 may require payment of maintenance fees. It is patentee's responsibility to ensure timely payment of maintenance fees when due.

PTOL-85 (Rev. 10/03) Approved for use through 04/30/2004.

SAMSUNG EXHIBIT 1004
Page 392 of 404

PART B - FEE(S) TRANSMITTAL

Complete and send this form, together with applicable fee(s), to: Mail **Mail Stop ISSUE FEE**
Commissioner for Patents
P.O. Box 1450
Alexandria, Virginia 22313-1450

or Fax **(703) 746-4000**

INSTRUCTIONS: This form should be used for transmitting the ISSUE FEE and PUBLICATION FEE (if required). Blocks 1 through 4 should be completed where appropriate. All further correspondence including the Patent, advance orders and notification of maintenance fees will be mailed to the current correspondence address as indicated unless corrected below or directed otherwise in Block 1, by (a) specifying a new correspondence address; and/or (b) indicating a separate "FEE ADDRESS" for maintenance fee notifications.

CURRENT CORRESPONDENCE ADDRESS (Note: Legibly mark-up with any corrections or use Block 1)

7590 11/25/2003

Babak S Sani
Townsend and Townsend and Crew
Two Embarcadero Center 8th Floor
San Francisco, CA 94111

Note: A certificate of mailing can only be used for domestic mailings of the Fee(s) Transmittal. This certificate cannot be used for any other accompanying papers. Each additional paper, such as an assignment or formal drawing, must have its own certificate of mailing or transmission.

Certificate of Mailing or Transmission

I hereby certify that this Fee(s) Transmittal is being deposited with the United States Postal Service with sufficient postage for first class mail in an envelope addressed to the Mail Stop ISSUE FEE address above, or being facsimile transmitted to the USPTO, on the date indicated below.

(Depositor's name)

(Signature)

(Date)

APPLICATION NO.	FILING DATE	FIRST NAMED INVENTOR	ATTORNEY DOCKET NO.	CONFIRMATION NO.
09/600,390	02/09/2001	Patrick Pirim	20046H-00060	7078

TITLE OF INVENTION: METHOD AND APPARATUS FOR DETECTION OF DROWSINESS

APPLN. TYPE	SMALL ENTITY	ISSUE FEE	PUBLICATION FEE	TOTAL FEE(S) DUE	DATE DUE
nonprovisional	NO	$1330	$0	$1330	02/25/2004

EXAMINER	ART UNIT	CLASS-SUBCLASS
MULLEN, THOMAS J	2632	340-576000

1. Change of correspondence address or indication of "Fee Address" (37 CFR 1.363).

❑ Change of correspondence address (or Change of Correspondence Address form PTO/SB/122) attached.

❑ "Fee Address" indication (or "Fee Address" Indication form PTO/SB/47; Rev 03-02 or more recent) attached. **Use of a Customer Number is required.**

2. For printing on the patent front page, list (1) the names of up to 3 registered patent attorneys or agents OR, alternatively, (2) the name of a single firm (having as a member a registered attorney or agent) and the names of up to 2 registered patent attorneys or agents. If no name is listed, no name will be printed.

1 _____

2 _____

3 _____

3. ASSIGNEE NAME AND RESIDENCE DATA TO BE PRINTED ON THE PATENT (print or type)

PLEASE NOTE: Unless an assignee is identified below, no assignee data will appear on the patent. Inclusion of assignee data is only appropriate when an assignment has been previously submitted to the USPTO or is being submitted under separate cover. Completion of this form is NOT a substitute for filing an assignment.

(A) NAME OF ASSIGNEE (B) RESIDENCE: (CITY and STATE OR COUNTRY)

Please check the appropriate assignee category or categories (will not be printed on the patent); ❑ individual ❑ corporation or other private group entity ❑ government

4a. The following fee(s) are enclosed:

❑ Issue Fee

❑ Publication Fee

❑ Advance Order - # of Copies _____

4b. Payment of Fee(s):

❑ A check in the amount of the fee(s) is enclosed.

❑ Payment by credit card. Form PTO-2038 is attached.

❑ The Director is hereby authorized by charge the required fee(s), or credit any overpayment, to Deposit Account Number _____ (enclose an extra copy of this form).

Director for Patents is requested to apply the Issue Fee and Publication Fee (if any) or to re-apply any previously paid issue fee to the application identified above.

(Authorized Signature) (Date)

NOTE; The Issue Fee and Publication Fee (if required) will not be accepted from anyone other than the applicant; a registered attorney or agent; or the assignee or other party in interest as shown by the records of the United States Patent and Trademark Office.

This collection of information is required by 37 CFR 1.311. The information is required to obtain or retain a benefit by the public which is to file (and by the USPTO to process) an application. Confidentiality is governed by 35 U.S.C. 122 and 37 CFR 1.14. This collection is estimated to take 12 minutes to complete, including gathering, preparing, and submitting the completed application form to the USPTO. Time will vary depending upon the individual case. Any comments on the amount of time you require to complete this form and/or suggestions for reducing this burden, should be sent to the Chief Information Officer, U.S. Patent and Trademark Office, U.S. Department of Commerce, Alexandria, Virginia 22313-1450. DO NOT SEND FEES OR COMPLETED FORMS TO THIS ADDRESS. SEND TO: Commissioner for Patents, Alexandria, Virginia 22313-1450.

Under the Paperwork Reduction Act of 1995, no persons are required to respond to a collection of information unless it displays a valid OMB control number.

TRANSMIT THIS FORM WITH FEE(S)

UNITED STATES PATENT AND TRADEMARK OFFICE

UNITED STATES DEPARTMENT OF COMMERCE
United States Patent and Trademark Office
Address: COMMISSIONER FOR PATENTS
P.O. Box 1450
Alexandria, Virginia 22313-1450
www.uspto.gov

APPLICATION NO.	FILING DATE	FIRST NAMED INVENTOR	ATTORNEY DOCKET NO.	CONFIRMATION NO.
09/600,390	02/09/2001	Patrick Pirim	20046H-00060	7078

EXAMINER	
MULLEN, THOMAS J	

ART UNIT	PAPER NUMBER
2632	

7590 11/25/2003

Babak S Sani
Townsend and Townsend and Crew
Two Embarcadero Center 8th Floor
San Francisco, CA 94111

DATE MAILED: 11/25/2003

Determination of Patent Term Extension under 35 U.S.C. 154 (b)
(application filed after June 7, 1995 but prior to May 29, 2000)

The Patent Term Extension is 0 day(s). Any patent to issue from the above-identified application will include an indication of the 0 day extension on the front page.

If a Continued Prosecution Application (CPA) was filed in the above-identified application, the filing date that determines Patent Term Extension is the filing date of the most recent CPA.

Applicant will be able to obtain more detailed information by accessing the Patent Application Information Retrieval (PAIR) system (http://pair.uspto.gov).

Any questions regarding the Patent Term Extension or Adjustment determination should be directed to the Office of Patent Legal Administration at (703) 305-1383. Questions relating to issue and publication fee payments should be directed to the Customer Service Center of the Office of Patent Publication at (703) 305-8283.

PTOL-85 (Rev. 10/03) Approved for use through 04/30/2004.

UNITED STATES PATENT AND TRADEMARK OFFICE

UNITED STATES DEPARTMENT OF COMMERCE
United States Patent and Trademark Office
Address: COMMISSIONER FOR PATENTS
P.O. Box 1450
Alexandria, Virginia 22313-1450
www.uspto.gov

APPLICATION NO.	FILING DATE	FIRST NAMED INVENTOR	ATTORNEY DOCKET NO.	CONFIRMATION NO.
09/600,390	02/09/2001	Patrick Pirim	20046H-00060	7078

7590 11/25/2003

Babak S Sani
Townsend and Townsend and Crew
Two Embarcadero Center 8th Floor
San Francisco, CA 94111

EXAMINER	
MULLEN, THOMAS J	
ART UNIT	**PAPER NUMBER**
2632	13

DATE MAILED: 11/25/2003

Notice of Fee Increase on October 1, 2003

If a reply to a "Notice of Allowance and Fee(s) Due" is filed in the Office on or after October 1, 2003, then the amount due will be higher than that set forth in the "Notice of Allowance and Fee(s) Due" since there will be an increase in fees effective on October 1, 2003. See Revision of Patent Fees for Fiscal Year 2004; Final Rule, 68 Fed. Reg. 41532, 41533, 41534 (July 14, 2003).

The current fee schedule is accessible from (http://www.uspto.gov/main/howtofees.htm).

If the fee paid is the amount shown on the "Notice of Allowance and Fee(s) Due" but not the correct amount in view of the fee increase, a "Notice of Pay Balance of Issue Fee" will be mailed to applicant. In order to avoid processing delays associated with mailing of a "Notice of Pay Balance of Issue Fee," if the response to the Notice of Allowance is to be filed on or after October 1, 2003 (or mailed with a certificate of mailing on or after October 1, 2003), the issue fee paid should be the fee that is required at the time the fee is paid. If the issue fee was previously paid, and the response to the "Notice of Allowance and Fee(s) Due" includes a request to apply a previously-paid issue fee to the issue fee now due, then the difference between the issue fee amount at the time the response is filed and the previously-paid issue fee should be paid. See Manual of Patent Examining Procedure, Section 1308.01 (Eighth Edition, August 2001).

Effective October 1, 2003, 37 CFR 1.18 is amended by revising paragraphs (a) through (c) to read as set forth below.

Section 1.18 Patent post allowance (including issue) fees.

(a) Issue fee for issuing each original or reissue patent, except a design or plant patent:
By a small entity (Sec. 1.27(a)) $665.00
By other than a small entity $1,330.00

(b) Issue fee for issuing a design patent:
By a small entity (Sec. 1.27(a)) $240.00
By other than a small entity $480.00

(c) Issue fee for issuing a plant patent:
By a small entity (Sec. 1.27(a)) $320.00
By other than a small entity $640.00

Questions relating to issue and publication fee payments should be directed to the Customer Service Center of the Office of Patent Publication at (703) 305-8283.

PTOL-85 (Rev. 10/03) Approved for use through 04/30/2004.

18

OIPE JC139
FEB 17 2004
PATENT & TRADEMARK OFFICE

PTO/SB/21 (08-03)

TRANSMITTAL FORM

(to be used for all correspondence after initial filing)

Application Number	09/600,390
Filing Date	February 9, 2001
First Named Inventor	Pirim, Patrick
Art Unit	2632
Examiner Name	Thomas J. Mullen
Attorney Docket Number	20046H-000600US

Total Number of Pages in This Submission

ENCLOSURES ***(Check all that apply)***

- ☐ Fee Transmittal Form
  - ☐ Fee Attached
- ☐ Amendment/Reply
  - ☐ After Final
  - ☐ Affidavits/declaration(s)
- ☐ Extension of Time Request
- ☐ Express Abandonment Request
- ☐ Information Disclosure Statement
- ☐ Certified Copy of Priority Document(s)
- ☐ Response to Missing Parts/ Incomplete Application
  - ☐ Response to Missing Parts under 37 CFR 1.52 or 1.53
- ☒ Drawing(s) (6 replacement sheets)
- ☐ Licensing-related Papers
- ☐ Petition
- ☐ Petition to Convert to a Provisional Application
- ☐ Power of Attorney, Revocation Change of Correspondence Address
- ☐ Terminal Disclaimer
- ☐ Request for Refund
- ☐ CD, Number of CD(s)
- ☐ After Allowance Communication to Group
- ☐ Appeal Communication to Board of Appeals and Interferences
- ☐ Appeal Communication to Group (Appeal Notice, Brief, Reply Brief)
- ☐ Proprietary Information
- ☐ Status Letter
- ☒ Other Enclosure(s) *(please identify below):*
  - Return Postcard
  - Part B - Fees Transmittal (Orig. + 1)
  - Letter to Official Draftsperson

Remarks The Commissioner is authorized to charge any additional fees to Deposit Account 20-1430.

SIGNATURE OF APPLICANT, ATTORNEY, OR AGENT

Firm or Individual	Townsend and Townsend and Crew LLP Gerald T. Gray Reg. No. 41,797
Signature	Gerald T. Gray
Date	February 13, 2004

CERTIFICATE OF TRANSMISSION/MAILING

I hereby certify that this correspondence is being facsimile transmitted to the USPTO or deposited with the United States Postal Service with sufficient postage as first class mail in an envelope addressed to: Commissioner for Patents, P.O. Box 1450, Alexandria, VA 22313-1450 on the date shown below.

Typed or printed name	Sylvia E. Arnold		
Signature	Sylvia E. Arnold	Date	February 13, 2004

60142097 v1

OIPE JC1390
FEB 17 2004
PATENT & TRADEMARK OFFICE

18 MA #14

I hereby certify that this correspondence is being deposited with the United States Postal Service as first class mail in an envelope addressed to:

Mail Stop Issue Fee
Commissioner for Patents,
P.O. Box 1450
Alexandria, VA 22313-1450

on February 13, 2004

TOWNSEND and TOWNSEND and CREW LLP

By Sylvia E. Arnold
Sylvia E. Arnold

PATENT

Attorney Docket No.: 20046H-000600

IN THE UNITED STATES PATENT AND TRADEMARK OFFICE

In re application of:

Patrick Pirim

Application No.: 09/600,390

Filed: February 9, 2001

For: METHOD AND APPARATUS FOR DETECTING DROWSINESS

Examiner: Thomas J. Mullen

Art Unit: 2632

LETTER TO OFFICIAL DRAFTSPERSON

Mail Stop Issue Fee
Commissioner for Patents
P.O. Box 1450
Alexandria, VA 22313-1450

Sir:

Pursuant to the Notice of Allowability dated November 25, 2003, applicant submits 6 sheets of replacement formal drawings to be made of record in the above-identified case.

Respectfully submitted,

Gerald T. Gray
Reg. No. 41,797

TOWNSEND and TOWNSEND and CREW LLP
Two Embarcadero Center, Eighth Floor
San Francisco, California 94111-3834
(415) 576-0200
Fax (415) 576-0300
GTG/sea
60141851 v1

Application No.: 09/600,390
Applicant: Patrick Pirim
Title: METHOD AND APPARATUS FOR DETECTION OF DROWSINESS
Sheet 2 of 20

OIPE JC1390
FEB 17 2004
PATENT & TRADEMARK OFFICE

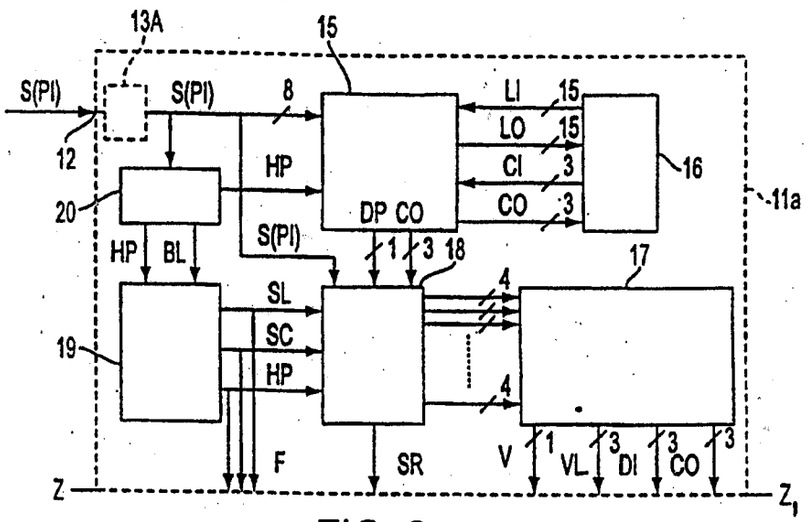

FIG. 2

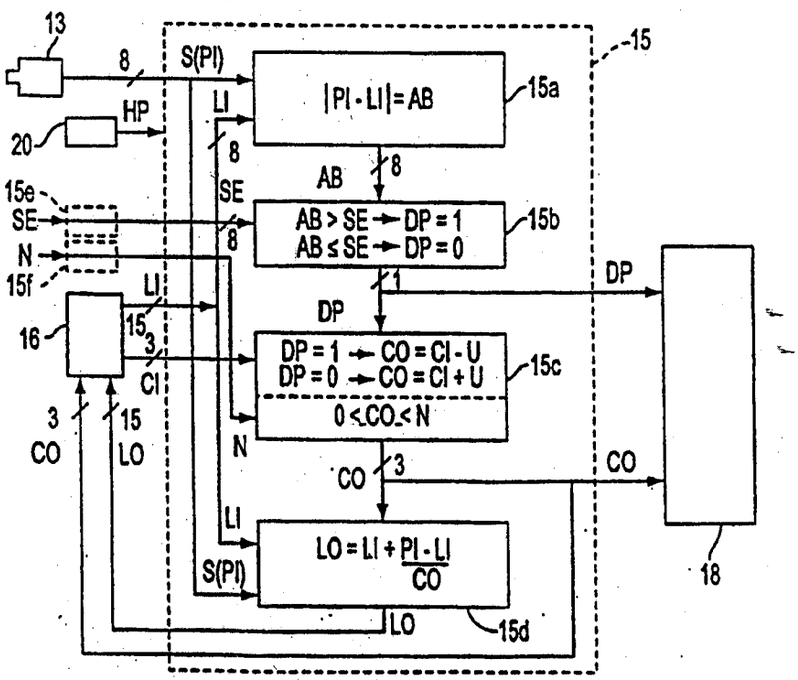

FIG. 3

REPLACEMENT SHEET

OIPE JC130
FEB 1 7 2004
PATENT & TRADEMARK OFFICE

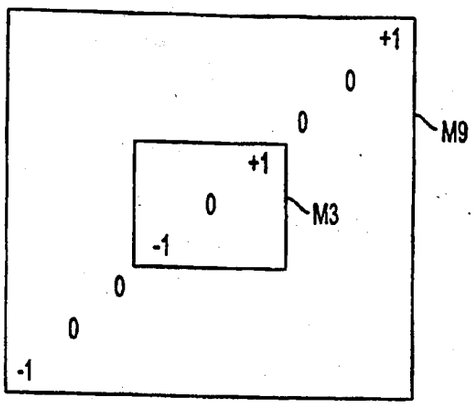

FIG. 7

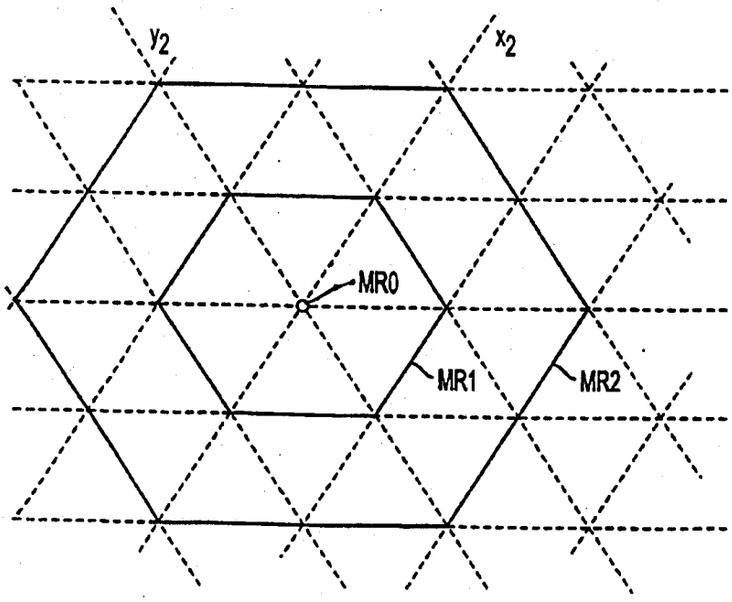

FIG. 8

REPLACEMENT SHEET

OIPE JC100
FEB 17 2004
PATENT & TRADEMARK OFFICE

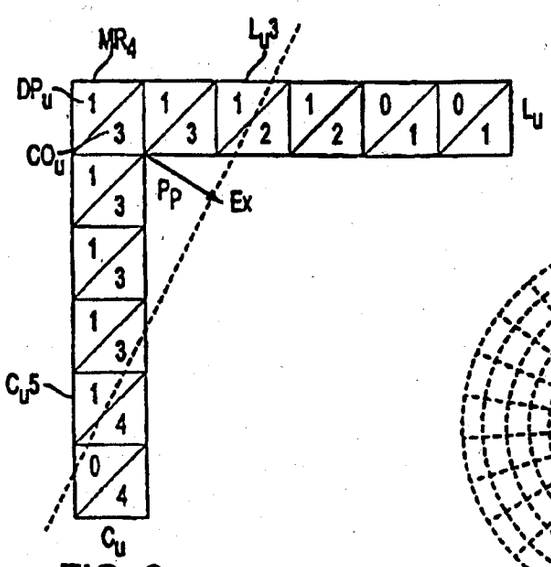

FIG. 9

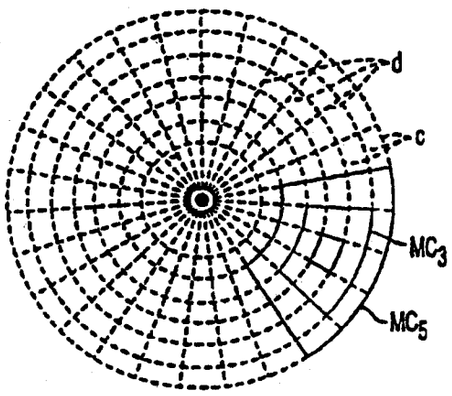

FIG. 10

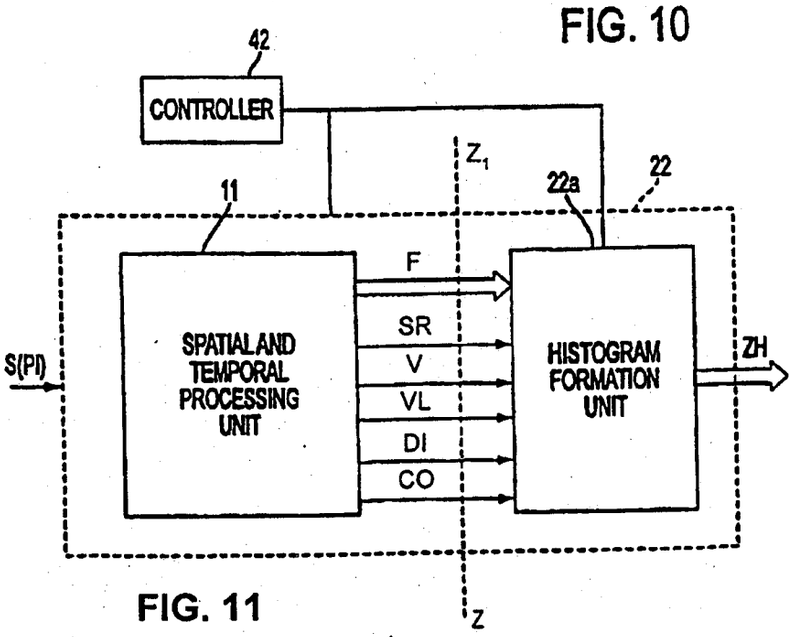

FIG. 11

REPLACEMENT SHEET

OIPE JC130
FEB 17 2004
PATENT & TRADEMARK OFFICE

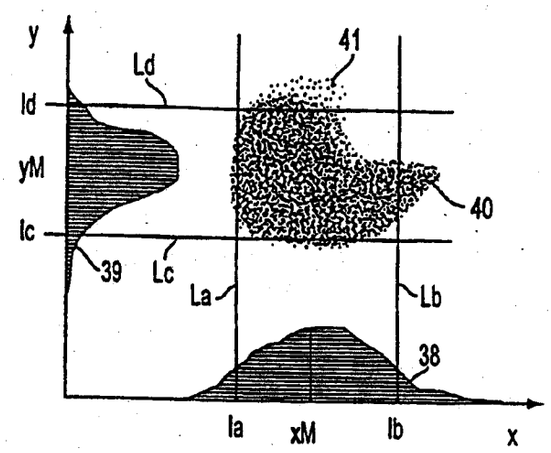

FIG. 13

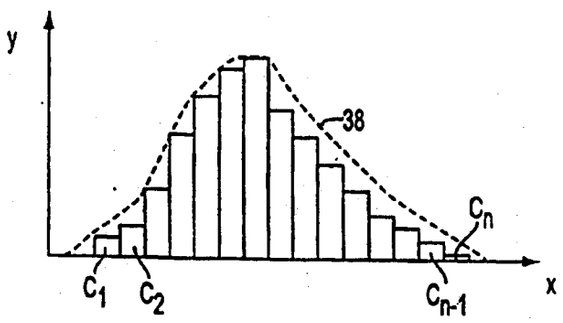

FIG. 16

REPLACEMENT SHEET

OIPE JC180
FEB 17 2004
PATENT & TRADEMARK OFFICE

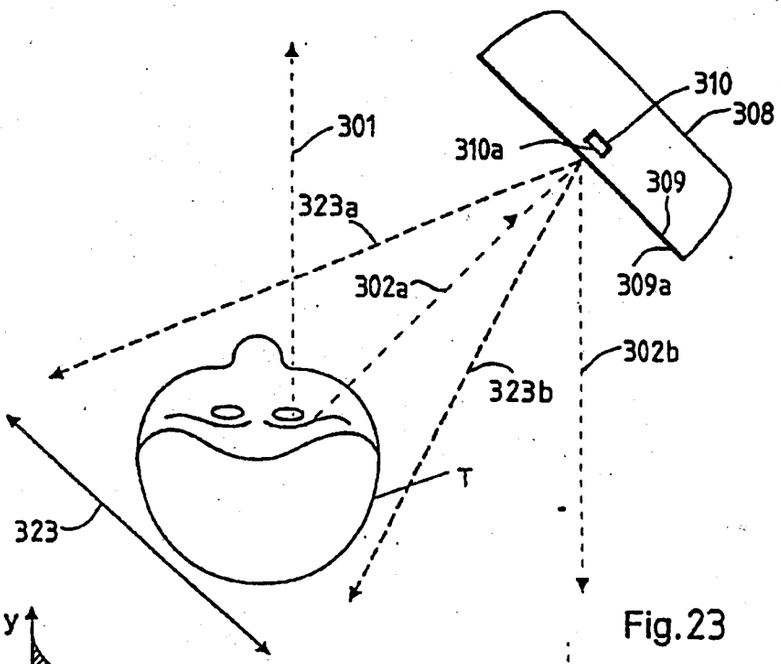

Fig.23

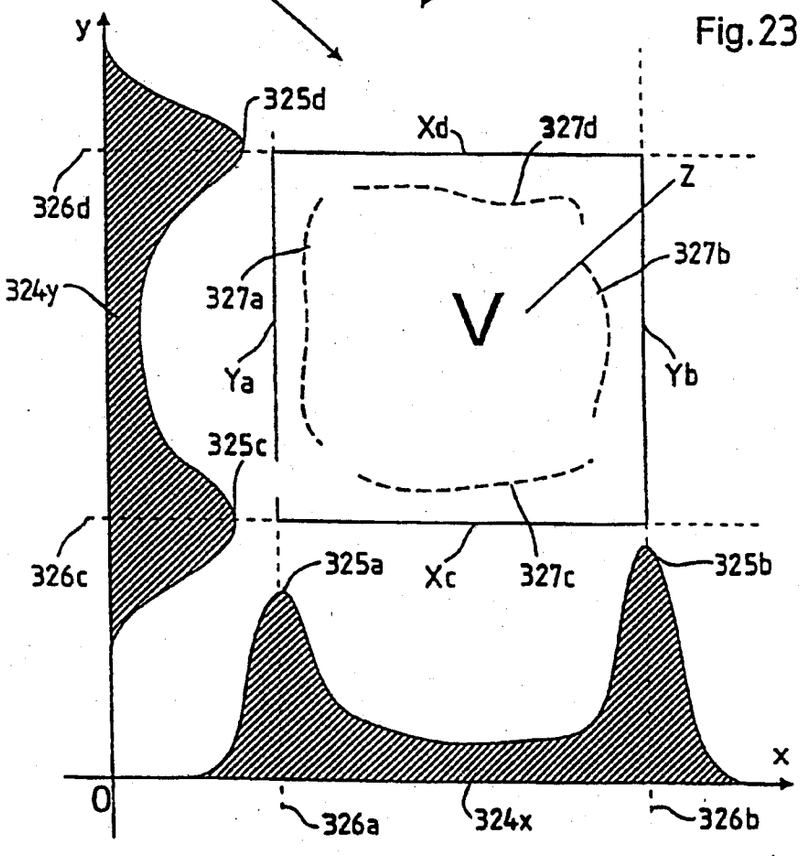

Fig.24

REPLACEMENT SHEET

OIPE JC130 FEB 17 2004 PATENT & TRADEMARK OFFICE

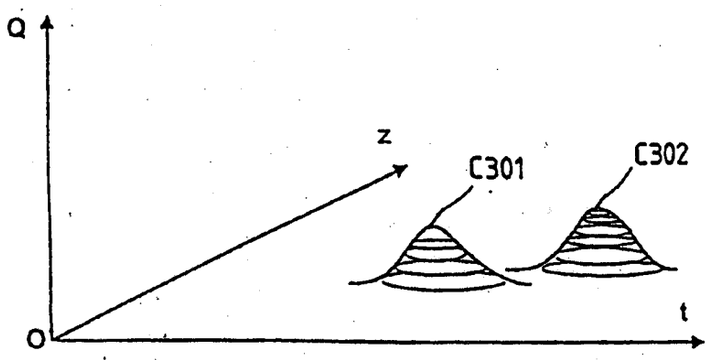

Fig. 28

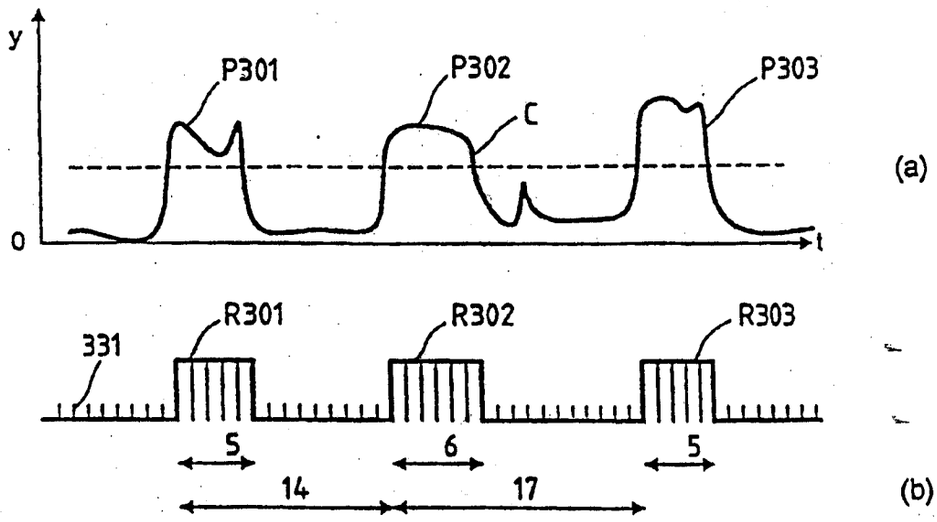

Fig. 29

REPLACEMENT SHEET

78

PART B - FEE(S) TRANSMITTAL

Complete and send this form, together with applicable fee(s), to: Mail Mail Stop ISSUE FEE
Commissioner for Patents
P.O. Box 1450
Alexandria, Virginia 22313-1450
or Fax (703) 746-4000

INSTRUCTIONS: This form should be used for transmitting the ISSUE FEE and PUBLICATION FEE (if required). Blocks 1 through 4 should be completed where appropriate. All further correspondence including the Patent, advance orders and notification of maintenance fees will be mailed to the current correspondence address as indicated unless corrected below or directed otherwise in Block 1, by (a) specifying a new correspondence address; and/or (b) indicating a separate "FEE ADDRESS" for maintenance fee notifications.

CURRENT CORRESPONDENCE ADDRESS (Note: Legibly mark-up with any corrections or use Block 1)

7590 11/25/2003

Babak S Sani
Townsend and Townsend and Crew
Two Embarcadero Center 8th Floor
San Francisco, CA 94111

OIPE JC1390 FEB 17 2004 PATENT & TRADEMARK OFFICE

Note: A certificate of mailing can only be used for domestic mailings of the Fee(s) Transmittal. This certificate cannot be used for any other accompanying papers. Each additional paper, such as an assignment or formal drawing, must have its own certificate of mailing or transmission.

Certificate of Mailing or Transmission
I hereby certify that this Fee(s) Transmittal is being deposited with the United States Postal Service with sufficient postage for first class mail in an envelope addressed to the Mail Stop ISSUE FEE address above, or being facsimile transmitted to the USPTO, on the date indicated below.

Sylvia E. Arnold	(Depositor's name)
Sylvia E. Arnold	(Signature)
February 13, 2004	(Date)

APPLICATION NO.	FILING DATE	FIRST NAMED INVENTOR	ATTORNEY DOCKET NO.	CONFIRMATION NO.
09/600,390	02/09/2001	Patrick Pirim	20046H-00060	7078

TITLE OF INVENTION: METHOD AND APPARATUS FOR DETECTION OF DROWSINESS

APPLN. TYPE	SMALL ENTITY	ISSUE FEE	PUBLICATION FEE	TOTAL FEE(S) DUE	DATE DUE
nonprovisional	NO	$1330	$0	$1330	02/25/2004

EXAMINER	ART UNIT	CLASS-SUBCLASS
MULLEN, THOMAS J	2632	340-576000

1. Change of correspondence address or indication of "Fee Address" (37 CFR 1.363).

☐ Change of correspondence address (or Change of Correspondence Address form PTO/SB/122) attached.

☐ "Fee Address" indication (or "Fee Address" Indication form PTO/SB/47; Rev 03-02 or more recent) attached. **Use of a Customer Number is required.**

2. For printing on the patent front page, list (1) the names of up to 3 registered patent attorneys or agents OR, alternatively, (2) the name of a single firm (having as a member a registered attorney or agent) and the names of up to 2 registered patent attorneys or agents. If no name is listed, no name will be printed.

1 Townsend and Townsend and CREW LLP
2
3

3. ASSIGNEE NAME AND RESIDENCE DATA TO BE PRINTED ON THE PATENT (print or type)

PLEASE NOTE: Unless an assignee is identified below, no assignee data will appear on the patent. Inclusion of assignee data is only appropriate when an assignment has been previously submitted to the USPTO or is being submitted under separate cover. Completion of this form is NOT a substitute for filing an assignment.

(A) NAME OF ASSIGNEE: Holding B.E.V.S.A.

(B) RESIDENCE: (CITY and STATE OR COUNTRY): Luxembourg, Luxembourg

Please check the appropriate assignee category or categories (will not be printed on the patent); ☐ individual ☐ corporation or other private group entity ☐ government

4a. The following fee(s) are enclosed:

☒ Issue Fee
☐ Publication Fee
☒ Advance Order - # of Copies 10

4b. Payment of Fee(s):

☐ A check in the amount of the fee(s) is enclosed.
☐ Payment by credit card. Form PTO-2038 is attached.
☒ The Director is hereby authorized by charge the required fee(s), or credit any overpayment, to Deposit Account Number 20-1430 (enclose an extra copy of this form).

Director for Patents is requested to apply the Issue Fee and Publication Fee (if any) or to re-apply any previously paid issue fee to the application identified above.

(Authorized Signature) Gerald T. Gray (Date) 02-13-04

Gerald T. Gray, Reg. No. 41,797

NOTE: The Issue Fee and Publication Fee (if required) will not be accepted from anyone other than the applicant; a registered attorney or agent; or the assignee or other party in interest as shown by the records of the United States Patent and Trademark Office.

02/20/2004 WABDELR3 00000178 201430 09600390

01 FC:1501 1330.00 DA
02 FC:8001 30.00 DA

This collection of information is required by 37 CFR 1.311. The information is required to obtain or retain a benefit by the public which is to file (and by the USPTO to process) an application. Confidentiality is governed by 35 U.S.C. 122 and 37 CFR 1.14. This collection is estimated to take 12 minutes to complete, including gathering, preparing, and submitting the completed application form to the USPTO. Time will vary depending upon the individual case. Any comments on the amount of time you require to complete this form and/or suggestions for reducing this burden, should be sent to the Chief Information Officer, U.S. Patent and Trademark Office, U.S. Department of Commerce, Alexandria, Virginia 22313-1450. DO NOT SEND FEES OR COMPLETED FORMS TO THIS ADDRESS. SEND TO: Commissioner for Patents, Alexandria, Virginia 22313-1450.

Under the Paperwork Reduction Act of 1995, no persons are required to respond to a collection of information unless it displays a valid OMB control number.

TRANSMIT THIS FORM WITH FEE(S)

SAMSUNG EXHIBIT 1004
Page 404 of 404