United States Patent [19]

Biro

[11] **3,818,194**

[45] **June 18, 1974**

[54] **PEDOMETER TOY**

[76] Inventor: **Carl B. Biro,** 126 Linn Ave., Yonkers, N.Y. 10705

[22] Filed: **May 21, 1973**

[21] Appl. No.: **362,265**

[52] **U.S. Cl.** **235/105**
[51] **Int. Cl.** **G01c 22/00**
[58] **Field of Search** 235/105

[56] **References Cited**

UNITED STATES PATENTS

694,652	3/1902	Kuhn	235/105
1,684,928	9/1928	Simpson	233/105 X

Primary Examiner—Lawrence R. Franklin
Attorney, Agent, or Firm—John W. Melville; Albert E. Strasser; Stanley H. Foster

[57] **ABSTRACT**

A pedometer toy comprising a support for means for indicating the number of feet and fractions of a mile traversed together with the drive mechanism for the indicator means. The drive mechanism comprises a pendulum, a ratchet wheel and pawl and a gear train. The support and its associated indicator means and drive mechanism are enclosed in a case affixable to the wearer's body. Finally, means are provided to set the indicator means to any desired reading.

12 Claims, 5 Drawing Figures

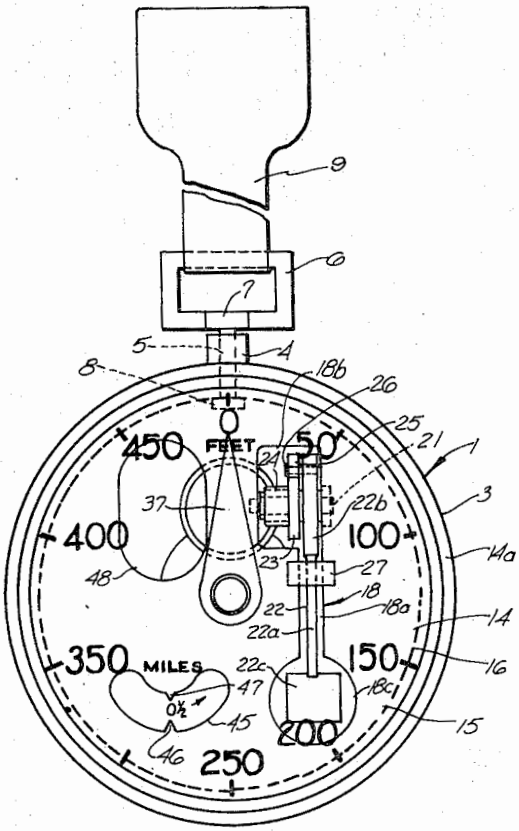

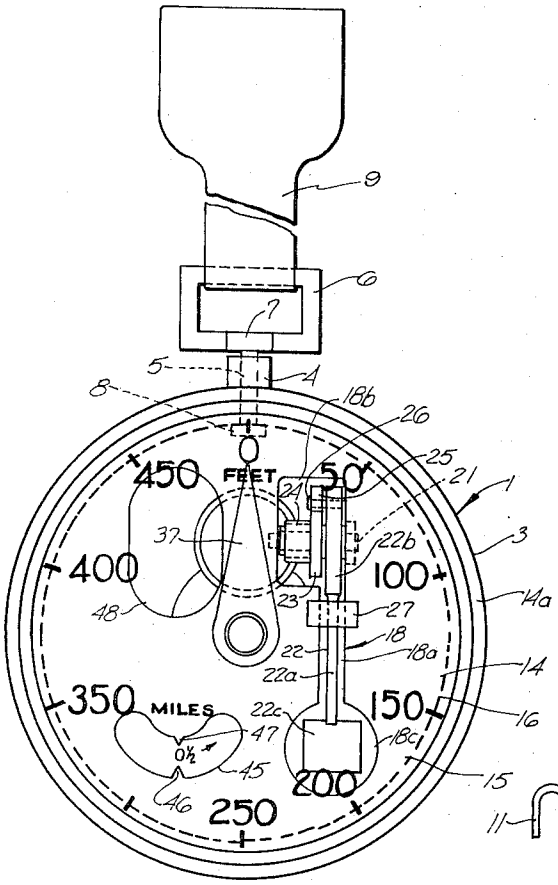

FIG. 1

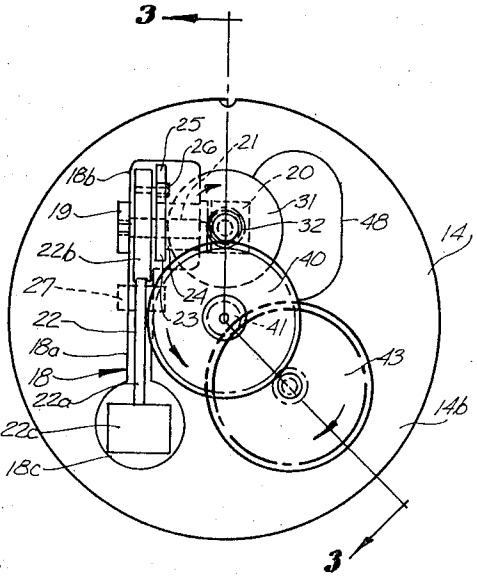

FIG. 2

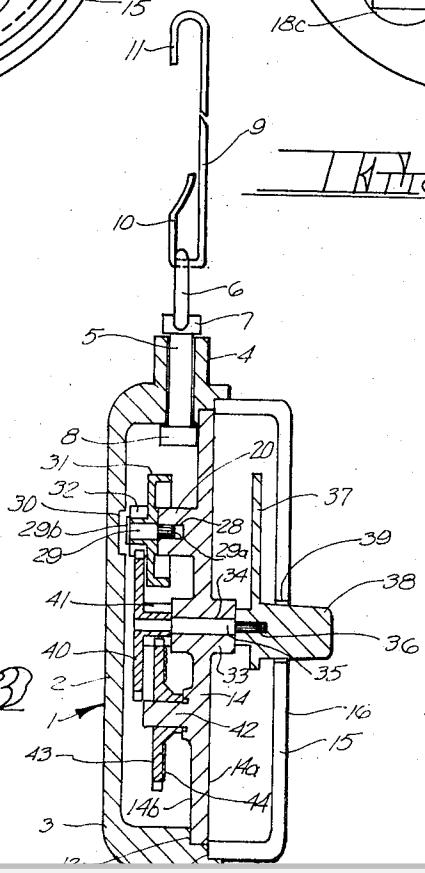

FIG. 3

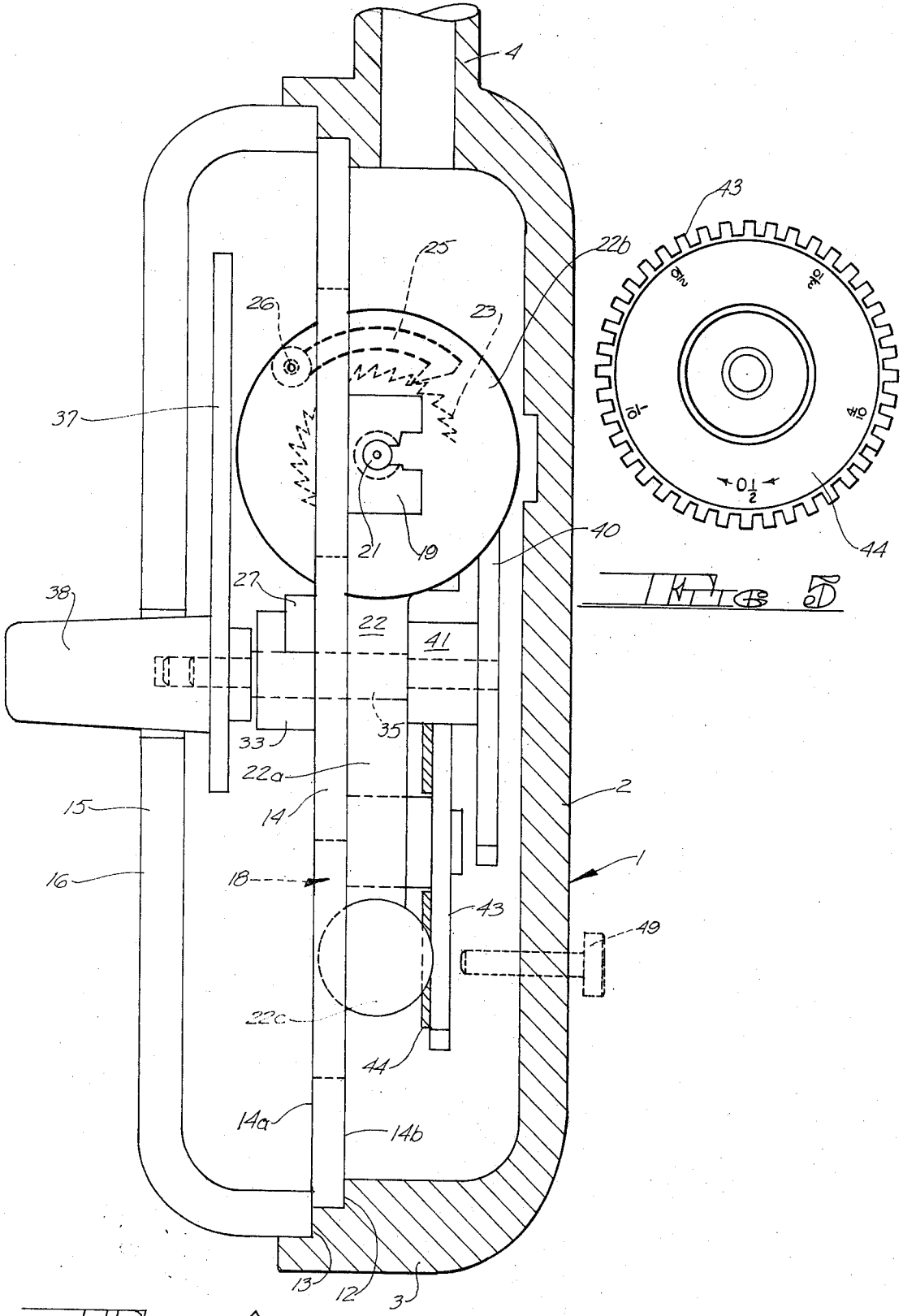

FIG. 5

FIG. 4

PEDOMETER TOY

BACKGROUND OF THE INVENTION

1. Field of the Invention

The invention relates to a pedometer toy, and more particularly to a pedometer capable of indicating with reasonable accuracy the number of feet and the fractions of a mile traversed, while at the same time being simple in design and inexpensive to manufacture.

2. Description of the Prior Art

Prior art workers have heretofore devised various types of pedometers, but for many years very little work has been done to further develop such instruments. The prior art pedometers have generally been characterized by complex and expensive spring-driven mechanisms. Frequently such pedometers were difficult to read and difficult to reset. For the most part, the prior art pedometers were intended to be accurate instruments for adult use and were not intended for use as a child's toy.

The present invention is directed to a pedometer toy for use by children. The structure is unique in that it avoids all use of springs which are expensive and unreliable in toy-grade mechanisms. As a result, the pedometer toy lends itself well to low-cost mass production. Instead of springs, gravitational and frictional forces are used by means of a pedulum-driven mechanism.

The pendulum-driven mechanism is simple in construction, sturdy and capable of withstanding handling and use by children, while at the same time yielding reasonable accuracy. Finally, the pedometer toy of the present invention is readily readable and resettable to zero or any other desired setting.

SUMMARY OF THE INVENTION

The pedometer toy comprises a support plate mounted in a case. The case is closed by a crystal which exposes to the view of the user one or more distance indicator means mounted on the support plate.

While, as will be explained hereinafter, the distance indicator means may be designed to give various readings, the exemplary embodiment described hereinafter is provided with a first indicator means giving a reading in feet and a second indicator means giving a reading in fractions of a mile.

The indicator means are driven by a gear train mounted on the support plate. The gear train, in turn, is advanced in appropriate increments by a pendulum carrying a pawl cooperating with a ratchet wheel.

Finally, suitable means are provided to affix the pedometer toy to the user's body. In the exemplary embodiment to be described, the case is provided with a hook-like element which may be engaged upon an appropriate part of the user's clothing such as his belt.

BRIEF DESCRIPTION OF THE DRAWINGS

FIG. 1 is a front elevational view of the pedometer toy of the present invention.

FIG. 2 is a rear elevational view of the support plate and the drive mechanism of the pedometer toy.

FIG. 3 is a cross sectional view of the support plate and drive mechanism taken along the section line 3—3 of FIG. 2 and including the case in cross section.

FIG. 5 is an elevational view of the miles indicator dial.

DESCRIPTION OF THE PREFERRED EMBODIMENTS

In all of the Figures, like parts have been given like index numerals. Turning first to FIGS. **1**, **3** and **4**, the pedometer case is generally indicated at **1**. While the shape of the case does not constitute a limitation on the present invention, the exemplary embodiment is illustrated as being circular and comprising a rear wall **2** and an annular side wall **3**.

The manner in which the pedometer is affixable to the wearer's body does not constitute a limitation on the present invention. For purposes of an exemplary showing, at the top of the pedometer case, the annular side wall **3** is shown as having a hollow cylindrical stem **4**. The hollow stem **4** is adapted to receive the shank **5** of a rectangular ring-like structure **6**. The ring **6** and stem **5** are rotatable in the hollow stem **4**. The shank **5** is captively held in the stem **4** by an enlarged portion **7** on the ring-like structure and an enlarged or upset end **8** on the shank.

The pedometer is removably affixable to a portion of the user's clothing (such as his belt) by an attachment means **9** comprising an elongated resilient member having a hook-like configuration **10** at its lower end engaging the ring-like structure **6**. At its upper end, the attachment means **9** has another hook-like configuration **11** for engagement of the user's belt or the like. Thus, the pedometer case **1** is not only rotatably supported by the shank **5** of the ring-like structure **6**, but also the ring-like structure **6** is swingable in the lower hook **10** of the attachment means **9**.

As is most clearly shown in FIGS. **3** and **4**, the forwardmost end of case side wall **3** has formed therein a pair of annular shoulders **12** and **13**. A disc-like support plate **14** (to be described hereinafter) is located on the shoulder **12**. The case is completed by a crystal **15** of clear plastic or the like. The crystal **15** has a forward face **16** and an annular side wall or flange **17**, the end of which rests upon the annular shoulder **13** of the case **1**. The crystal may be so sized as to have a snap engagement with the case **1** or it may be permanently affixed thereto by glue or the like. It will be noted that the crystal is of such thickness as to partially overlap the peripheral edge of the support plate **14**, holding the support plate in place.

While the material from which the pedometer case is made does not constitute a limitation on the present invention, it will be readily understood that all of the structure thus far described, including the case, the ring-like structure and attachment means, the support plate and the crystal may be easily and inexpensively molded of plastic or the like.

The disc-like support plate **14** has a forward face or surface **14*a*** and a rearward face or surface **14*b***. The support plate has a first opening therein generally indicated at **18**. The opening **18** has an elongated narrow portion **18*a*** with an enlarged upper portion **18*b*** and an enlarged lower portion **18*c***. On either side of the enlarged upper portion **18*b*** of opening **18** the rearward surface **14*b*** of the support plate has a pair of integral, rearwardly extending lugs **19** and **20**. The lugs **19** and

As is most clearly shown in FIGS. **1, 2** and **4,** a pendulum **22** is provided comprising an elongated shank **22***a* surmounted by an integral disc-like portion **22***b* and provided at its bottom end with a weight **22***c*. The disc-like portion is pivotally mounted on shaft **21.** Adjacent the disc-like portion of the pendulum a ratchet wheel **23** and a pinion **24** are also rotatively mounted on the shaft **21.** The ratchet wheel **23** and the pinion **24** are intended to rotate together and may constitute an integral, one-piece structure. A pawl **25,** adapted to cooperate with ratchet wheel **23,** is pivotally affixed to the disc-like portion **22***b* of the pendulum by a pin **26.**

From the structure thus far described, it will be understood that the enlarged upper portion **18***b* of the opening **18** in the support plate is adapted to accommodate the disc-like portion **22***b* of the pendulum, as well as the ratchet wheel **23,** pinion **24** and pawl **25.** The elongated portion **18***a* of the opening **18** accommodates the shank **22***a* of the pendulum, while the lower enlarged portion **18***c* of the opening **18** accommodates the pendulum weight **22***c*.

The pendulum is swingable on the shaft **21** and, as will be evident from FIGS. **1** and **4,** the forward swing of the pendulum through the opening **18** in the support plate will be limited by an integral strap **27** formed on the forward face **14***a* of the support plate **14.** The strap **27** spans the elongated portion **18***a* of the opening **18** and acts as a forward abutment for the shank portion **22***a* of the pendulum. The rearward limit of swing of the pendulum is determined by abutment of the weight **22***c* of the pendulum and the inside surface of the case wall **2.**

The purpose of ratchet wheel **23** and pawl **25** is to translate the swinging motion of pendulum **22** into incremental rotational movement. Thus, as the pendulum swings forwardly, i.e., to the left in FIG. **4,** the pawl **25** will slide over the teeth of ratchet wheel **23.** Upon rearward movement of the pendulum (i.e., to the right in FIG. **4**) the pawl will engage the teeth of the ratchet wheel and impart to it an increment of counterclockwise rotation (as viewed in FIG. **4**). As indicated above, the pinion **24** will rotate with the ratchet wheel **23.**

Referring to FIG. **3,** it will be noted that the integral lug **20** on the rear face of support plate **14** has a perforation **28** therein. The perforation **28** is adapted to receive the splined end **29***a* of a shaft **29** with a force fit. The rear wall **2** of the case **1** may have a relief or depression **30** therein to assure proper clearance for the headed end **29***b* of shaft **29.**

Rotatively mounted on shaft **29** is a crown gear **31** and pinion **32.** The crown gear **31** and pinion **32** are intended to rotate together and may comprise an integral, one-piece structure. The teeth of the crown gear mesh with the teeth of pinion **24** so that the incremental rotation of ratchet wheel **23** and pinion **24** will cause incremental rotation of the crown gear **31** and pinion **32** in a clockwise direction, as seen in FIG. **2.**

The support plate **14** has a centrally located boss **33** extending rearwardly of its rear surface **14***b* and forwardly of its forward surface **14***a*. The boss **33** has an axial perforation **34.** Rotatively mounted in the perforation **34** is a shaft **35.** The forward end of shaft **35** is

the reset knob **38** extends through a central perforation **39** in the crystal **15.**

Non-rotatively affixed to the rear end of shaft **35** is a spur gear **40** and a pinion **41.** The spur gear **40** and pinion **41** may again comprise an integral one-piece structure. The teeth of spur gear **40** are intended to mesh with the teeth of pinion **32.**

From FIG. **2** it will be evident that the incremental clockwise motion of crown gear **31** and pinion **32** will cause an incremental rotation of spur gear **40** and pinion **41** in a counterclockwise direction. Since the spur gear **40** and pinion **41** are non-rotatively affixed to shaft **35,** their rotation will be imparted to the shaft **35** and the hand **37.** As viewed in FIG. **1,** the hand **37** will rotate in a clockwise direction. As is further shown in FIG. **1,** the forward face **16** of the crystal **15** has thereon indicia, graduated in feet, from 0 to 500. As is well known in the art, the size and number of teeth of the ratchet wheel **23** and the remaining gear train thus far described will be so chosen as to cause the hand **37** to give a reasonably accurate reading of the feet traversed. Since the pedometer of the present invention is particularly adapted for use as a child's toy, the gear train may be so selected as to give an accurate reading on the basis of the average stride length of a child within a given age group.

Returning to FIG. **3,** the rear surface **14**b of the support plate **14** has an integral, rearwardly extending shaft **42** thereon. Rotatively mounted on the shaft **42** is a spur gear or "miles wheel" **43.** The free end of shaft **42** may be upset to assure that the spur gear **43** will remain in place. The teeth of spur gear **43** are intended to mesh with those of pinion **41** so that (as seen in FIG. **2**) incremental rotation of spur gear **40** and pinion **41** will impart incremental rotation of spur gear **43** in a clockwise direction.

The forward surface of spur gear or miles wheel **43** may have a "miles dial" affixed thereto. This is illustrated in FIG. **5.** The miles dial **44** is affixed to the spur gear **43** by any suitable means such as gluing or the like. It will be noted that the miles dial is graduated in tenths of a mile from 0 miles to one-half mile.

As is shown in FIG. **1,** the support plate **14** has an opening **45** therein through which a portion of the miles dial may be viewed. In order to facilitate the reading, the opening **45** may be so configured as to have indicator points **46** and **47.** It will be understood that the miles wheel or spur gear **43** will be so chosen as to have an appropriate diameter and number of teeth to give a reasonably accurate miles reading.

Finally, the support plate **14** may have an additional opening **48** through which a portion of the gear train may be viewed.

The operation of the pedometer toy of the present invention is as follows. The user affixes the pedometer toy to an appropriate portion of his clothing, such as his belt, by attachment means **9.** With each stride, the motion of the user's body will cause the pendulum **22** to swing. The swinging motion of the pendulum will, through the agency of ratchet wheel **23,** pawl **25** and pinion **24** impart an incremental rotational movement to crown gear **31** and pinion **32.** Pinion **32,** in turn, will drive spur gear **40,** resulting in clockwise rotation of

DOCKET ALARM

Explore Litigation Insights

Docket Alarm provides insights to develop a more informed litigation strategy and the peace of mind of knowing you're on top of things.

Real-Time Litigation Alerts

Keep your litigation team up-to-date with **real-time alerts** and advanced team management tools built for the enterprise, all while greatly reducing PACER spend.

Our comprehensive service means we can handle Federal, State, and Administrative courts across the country.

Advanced Docket Research

With over 230 million records, Docket Alarm's cloud-native docket research platform finds what other services can't. Coverage includes Federal, State, plus PTAB, TTAB, ITC and NLRB decisions, all in one place.

Identify arguments that have been successful in the past with full text, pinpoint searching. Link to case law cited within any court document via Fastcase.

Analytics At Your Fingertips

Learn what happened the last time a particular judge, opposing counsel or company faced cases similar to yours.

Advanced out-of-the-box PTAB and TTAB analytics are always at your fingertips.

API

Docket Alarm offers a powerful API (application programming interface) to developers that want to integrate case filings into their apps.

LAW FIRMS

Build custom dashboards for your attorneys and clients with live data direct from the court.

Automate many repetitive legal tasks like conflict checks, document management, and marketing.

FINANCIAL INSTITUTIONS

Litigation and bankruptcy checks for companies and debtors.

E-DISCOVERY AND LEGAL VENDORS

Sync your system to PACER to automate legal marketing.