06/04/97 68104 U.S. PTO 08/869305

Class 713 Subclass 200

ISSUE CLASSIFICATION

SCANNED 4

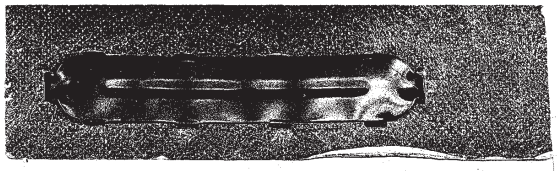

6088802

UTILITY SERIAL NUMBER	PATENT DATE JUL 11 2000	PATENT NUMBER

SERIAL NUMBER	FILING DATE	CLASS	SUBCLASS	GROUP ART UNIT	EXAMINER
08/869,305	06/04/97	~~380~~ 713 ~~395~~	200 ~~186~~	~~2642~~ 2785	Hua

APPLICANTS

WILLIAM P. BIALICK, CLARKSVILLE, MD; MARK J. SUTHERLAND, MILPITAS, CA; JANET L. DOLPHIN-PETERSON, BELVEDERE, CA; THOMAS K. ROWLAND, LOS GATOS, CA; KIRK W. SKEBA, FREMONT, CA; RUSSELL D. HOUSLEY, HERNDON, VA.

CONTINUING DATA********
VERIFIED

none LVH 11/10/98

FOREIGN APPLICATIONS********
VERIFIED

none LVH 11/10/98

FOREIGN FILING LICENSE GRANTED 11/03/97 ***** SMALL ENTITY *****

Foreign priority claimed 35 USC 119 conditions met Verified and Acknowledged	☐ yes ☑ no ☐ yes ☑ no LVH 11/10/98 Examiner's initials	AS FILED	STATE OR COUNTRY	SHEETS DRWGS.	TOTAL CLAIMS	INDEP. CLAIMS	FILING FEE RECEIVED	ATTORNEY'S DOCKET NO.
			MD	7	32	12	$460.00	SPY-004

ADDRESS

DAVID R GRAHAM
1337 CHEWPON AVENUE
MILPITAS CA 95035

TITLE

PERIPHERAL DEVICE WITH INTEGRATED SECURITY FUNCTIONALITY

U.S. DEPT. OF COMM./ PAT. & TM—PTO-436L (Rev.12-94)

PARTS OF APPLICATION FILED SEPARATELY

Applications Examiner 6/8/99

NOTICE OF ALLOWANCE MAILED: 6-7-99

Assistant Examiner

CLAIMS ALLOWED: Total Claims 39 | Print Claim 1

ISSUE FEE: Amount Due $605.00 | Date Paid 9-14-99

LY V. HUA
PRIMARY EXAMINER

Primary Examiner

DRAWING: Sheets Drwg. 7 | Figs. Drwg. 11 | Print Fig. 6

ISSUE BATCH NUMBER U04

Label Area

PREPARED FOR ISSUE

WARNING: The information disclosed herein may be restricted. Unauthorized disclosure may be prohibited by the United States Code Title 35, Sections 122, 181 and 368. Possession outside the U.S. Patent & Trademark Office is restricted to authorized employees and contractors only.

Form PTO-436A (Rev. 8/92)

ISSUE FEE IN FILE

Formal Drawings (___shts) set ___ Issue Fee

SCANNED C SMB

(FACE)

68104 U.S. PTO
08/869305
06/04/97

PATENT APPLICATION

08869305

APPROVED FOR LICENSE ☐

INITIALS _____

Date Entered or Counted | **CONTENTS** | Date Received or Mailed

Date Entered or Counted			Date Received or Mailed
	1.	Application 7 papers.	
	2.	Fwd. unsigned Dec./Fee	11/4/97
	3.	Dec. Surch. Fee	1-12-98
	4.	I.D.S.	10.8.98
	5.	Prior Art	Aug 13, 1998
11/23	6.	Rej. 3 pgs	12.11.98
3/25/99	7.	Amdt A	Mar. 15, 1999
4/1/99	8.	Supp. Amdt B	Mar 18, 1999
	9.	Prior Art	Mar 30, 1999
6/7	10.	Notice of allow	6-2-99
	11.	Prior Art + fee	Sep 13, 1999
	12.	Letter	12-16-99
	13.		
4-11-00	14.	Formal Drawings (7 sheets) rec'd	6-14-99
	15.		
	16.		
	17.		
	18.		
	19.		
	20.		
	21.		
	22.		
	23.		
	24.		
	25.		
	26.		
	27.		
	28.		
	29.		
	30.		
	31.		
	32.		

(FRONT)

Staple Issue Slip Here

POSITION		ID NO.	DATE
CLASSIFIER		5	8-5-97
EXAMINER		10270	11/3/97
TYPIST			
VERIFIER			
CORPS CORR.			
SPEC. HAND		704	3-6
FILE MAINT.		10270	11/3/97
DRAFTING			

INDEX OF CLAIMS

Claim Final	Claim Original	Date
	1	✓ 11/20/98 6/3/99
2	2	+ "
3	3	+ "
4	4	✓ "
5	5	+ "
1	6	O "
6	7	O "
11	8	✓ "
12	9	+ "
15	10	+ "
19	11	✓ "
22	12	+ "
23	13	O "
24	14	✓ "
25	15	+ "
26	16	+ "
32	17	✓ "
35	18	+ "
	19	+
14	20	+ "
	21	+
17	22	+ "
18	23	+ "
	24	✓
20	25	✓ "
21	26	✓ "
	27	+
	28	✓
36	29	✓ "
37	30	✓ "
38	31	✓ "
39	32	✓ "
7	33	"
8	34	"
9	35	"
10	36	"
13	37	"
16	38	"
26	39	"
27	40	"
29	41	"
30	42	"
31	43	"
33	44	"
34	45	"
	46	
	47	
	48	
	49	
	50	

SYMBOLS

- ✓ ..... Rejected
- = ... Allowed
- - (Through numberal) Canceled
- + ... Restricted
- N ..... Non-elected
- I ..... Interference
- A ..... Appeal
- O ..... Objected

Claim Final	Claim Original	Date
	51	
	52	
	53	
	54	
	55	
	56	
	57	
	58	
	59	
	60	
	61	
	62	
	63	
	64	
	65	
	66	
	67	
	68	
	69	
	70	
	71	
	72	
	73	
	74	
	75	
	76	
	77	
	78	
	79	
	80	
	81	
	82	
	83	
	84	
	85	
	86	
	87	
	88	
	89	
	90	
	91	
	92	
	93	
	94	
	95	
	96	
	97	
	98	
	99	
	100	

(LEFT INSIDE)

STAPLE AREA

U.S. GOVERNMENT PRINTING OFFICE: 1998–440-769

PATENT NUMBER

ORIGINAL CLASSIFICATION

CLASS	SUBCLASS
713	200

APPLICATION SERIAL NUMBER

08/869,305

APPLICANT'S NAME (PLEASE PRINT)

BIALICK ET AL.

IF REISSUE, ORIGINAL PATENT NUMBER

CROSS REFERENCE(S)

CLASS	SUBCLASS (ONE SUBCLASS PER BLOCK)			
713	201	202		

INTERNATIONAL CLASSIFICATION

G	0	6	K		14/67
					/
					/
					/

GROUP ART UNIT: 2785

ASSISTANT EXAMINER (PLEASE STAMP OR PRINT FULL NAME)

PRIMARY EXAMINER (PLEASE STAMP OR PRINT FULL NAME): LY V. HUA

PTO 270
(REV. 5-91)

ISSUE CLASSIFICATION SLIP

U.S. DEPARTMENT OF COMMERCE
PATENT AND TRADEMARK OFFICE

[redacted]

SEARCHED

Class	Sub.	Date	Exmr.
395	188.01	11/10/98	LWK
/	187.01	11/10/98	LWK
	186	11/10/98	LWK
380	4	11/10/98	LWK
/	25	/	/
	49		
713	200	6/1/99	LWK
713	201	/	/
713	202		
update Search on the above Subclasses of Class 380		6/1/99 /	LWK /

31

INTERFERENCE SEARCHED

Class	Sub.	Date	Exmr.
713	200	6/2/99	LWK
713	201	6/2/99	LWK
713	202	6/2/99	LWK

SEARCH NOTES

	Date	Exmr.
MAYA	9/17/98	LWK
APS	11/10/98	LWK

(RIGHT OUTSIDE)

#7

A/DOFee

71868 U.S. PTO
06/04/97

Attorney Docket No.: SPY-004

IN THE UNITED STATES PATENT AND TRADEMARK OFFICE

June 4, 1997

Assistant Commissioner for Patents
Washington, D. C. 20231
ATTN: BOX PATENT APPLICATION

Transmitted herewith for filing is a patent application, as follows:

Inventors: William P. Bialick, Mark J. Sutherland, Janet L. Dolphin-Peterson, Thomas K. Rowland, Kirk W. Skeba and Russell D. Housley
Title: PERIPHERAL DEVICE WITH INTEGRATED SECURITY FUNCTIONALITY

Enclosed with this transmittal letter are:

42 pages of specification, claims and abstract
7 sheets of drawings: ___ (Formal) _X_ (Informal)
3 pages of Declaration and Power of Attorney (Unexecuted)
___ Power of Attorney
___ Assignment of invention to Spyrus, Inc.
___ Small Entity Declaration
___ Independent Inventor's Declaration
___ PTO Form-1449
___ Preliminary amendment

The filing fee is calculated as follows (small entity status is claimed):

CLAIMS AS FILED (fees computed under §1.9(f))

	Number Filed		Number Extra		Rate		Fee
Basic Filing Fee:							$ 385.00
Total Claims:	32	- 20 =	12	X	$11	=	$ 132.00
Independent Claims:	12	- 3 =	9	X	$40	=	$ 360.00
___ Application contains one or more multiple dependent claims ($260 total fee)							$ 0.00
TOTAL FILING FEE:							**$ 877.00**

A Return Post Card and this sheet in duplicate are also enclosed.

I hereby certify that this correspondence is being deposited with the United States Postal Service as Express Mail in an envelope addressed to: Assistant Commissioner for Patents, Washington, D.C., 20231, on June 4, 1997. Express Mail Receipt No. EF 557 934 406 US

David R. Graham 6-4-97
David R. Graham Date

Respectfully submitted,

David R. Graham
David R. Graham
Reg. No. 36,150
Attorney for Applicants

Attorney Docket No.: SPY-004

IN THE UNITED STATES PATENT AND TRADEMARK OFFICE

June 4, 1997

Assistant Commissioner for Patents
Washington, D. C. 20231
ATTN: BOX PATENT APPLICATION

Transmitted herewith for filing is a patent application, as follows:

Inventors: William P. Bialick, Mark J. Sutherland, Janet L. Dolphin-Peterson, Thomas K. Rowland, Kirk W. Skeba and Russell D. Housley
Title: PERIPHERAL DEVICE WITH INTEGRATED SECURITY FUNCTIONALITY

Enclosed with this transmittal letter are:

42 pages of specification, claims and abstract
7 sheets of drawings: ___ (Formal) _X_ (Informal)
3 pages of Declaration and Power of Attorney (Unexecuted)
___ Power of Attorney
___ Assignment of invention to Spyrus, Inc.
___ Small Entity Declaration
___ Independent Inventor's Declaration
___ PTO Form-1449
___ Preliminary amendment

The filing fee is calculated as follows (small entity status is claimed):

CLAIMS AS FILED (fees computed under §1.9(f))

	Number Filed		Number Extra		Rate		Fee
Basic Filing Fee:							$ 385.00
Total Claims:	32	- 20 =	12	X	$11	=	$ 132.00
Independent Claims:	12	- 3 =	9	X	$40	=	$ 360.00
___ Application contains one or more multiple dependent claims ($260 total fee)							$ 0.00
TOTAL FILING FEE:							**$ 877.00**

A Return Post Card and this sheet in duplicate are also enclosed.

I hereby certify that this correspondence is being deposited with the United States Postal Service as Express Mail in an envelope addressed to: Assistant Commissioner for Patents, Washington, D.C., 20231, on June 4, 1997. Express Mail Receipt No. EF 557 934 406 US

David R. Graham 6-4-97
David R. Graham Date

Respectfully submitted,

David R. Graham
David R. Graham
Reg. No. 36,150
Attorney for Applicants

PERIPHERAL DEVICE WITH INTEGRATED SECURITY FUNCTIONALITY

William P. Bialick
Mark J. Sutherland
Janet L. Dolphin-Peterson
Thomas K. Rowland
Kirk W. Skeba
Russell D. Housley

CROSS-REFERENCE TO RELATED APPLICATION

This application is related to the commonly owned, co-pending United States Patent Application entitled "Modular Security Device," by William P. Bialick, Mark J. Sutherland, Janet L. Dolphin-Peterson, Thomas K. Rowland, Kirk W. Skeba and Russell D. Housley, filed on the same date as the present application and having Attorney Docket No. SPY-003, the disclosure of which is incorporated by reference herein.

BACKGROUND OF THE INVENTION

1. Field of the Invention

This invention relates to a peripheral, often portable, device (as well as the methods employed by such a peripheral device, and systems including such a peripheral device and a host computing device with which the peripheral device communicates) that can communicate with a host computing device to enable one or more security operations to be performed by the peripheral device on data stored within the host computing device, data provided from the host computing device to the peripheral device, or data retrieved by the host computing device from the peripheral device.

2. Related Art

Computing capability is becoming increasingly portable. In particular, there are more and more portable peripheral devices that are adapted for communication with a host computing device (e.g., desktop computer, notebook computer or personal digital assistant) to enable particular

functionality to be achieved. These portable peripheral devices can take a variety of physical forms (e.g., PCMCIA cards, smart cards, CD-ROMs) and can perform an assortment of functions (e.g., storage, communications and cryptography).

However, while portable computing affords a number of advantages, it has a significant disadvantage in that the computational environment (including the portable peripheral devices, the host computing devices in which they are used, and any other computational devices that communicate with those devices) is more susceptible to security breaches, i.e., unauthorized access to, or modification of, programs and/or data resident within the environment. Consequently, cryptographic devices and methods have been developed for use with such computational environments (as well as other computational environments) to enable increased levels of environment security to be obtained.

FIG. 1 is a block diagram of a prior art system for enabling a host computing device to provide secured data to, and retrieve secured data from, a portable device. In FIG. 1, a system 100 includes a host computing device 101 and a portable device 102. The host computing device 101 and portable device 102 are adapted to enable communication between the devices 101 and 102. The host computing device 101 includes a security mechanism 101a (which can be embodied by appropriately configured hardware, software and/or firmware, such as, for example, a general purpose microprocessor operating in accordance with instructions of one or more computer programs stored in a data storage device such as a hard disk) which can be directed to perform one or more cryptographic operations.

In the system 100, if it is desired to provide secured data from the host computing device 101 to the portable device 102, the host computing device 101 causes the security mechanism 101a to perform appropriate cryptographic operations on data before the data is transferred to the

portable device 102. Similarly, the host computing device 101 can receive secured data from the portable device 102 and perform appropriate cryptographic operations on the data to convert the data into a form that enables the data to be accessed and/or modified by a person who is authorized to do so.

A significant deficiency of the system 100 is that the security mechanism 101a is itself typically not adequately secure. It is commonly accepted that the components (including hardware, software and/or firmware) of most host computing devices are inherently insecure. This is because the system design of host computing devices is, typically, intentionally made open so that components made by different manufacturers can work together seamlessly. Thus, an unauthorized person may obtain knowledge of the operation of the security mechanism 101a (e.g., identify a cryptographic key), thereby enabling that person to gain access to, and/or modify, the (thought to be secured) data.

FIG. 2 is a block diagram of another prior art system for enabling a host computing device to provide secured data to, and retrieve secured data from, a portable device. In FIG. 2, a system 200 includes a host computing device 201, a portable device 202 and a security device 203. The host computing device 201, the portable device 202 and security device 203 are adapted to enable communication between the devices 201 and 202, and between the devices 201 and 203. The security device 203 includes appropriately configured hardware, software and/or firmware which can be directed to perform one or more cryptographic operations.

In the system 200, if it is desired to provide secured data from the host computing device 201 to the portable device 202, the host computing device 201 first causes data to be transferred to the security device 203, where appropriate cryptographic operations are performed on the data. The secured data is then transferred back to the host

computing device 201, which, in turn, transfers the secured data to the portable device 202. Similarly, the host computing device 201 can receive secured data from the portable device 202 by, upon receipt of secured data, transferring the secured data to the security device 203, which performs appropriate cryptographic operations on the data to convert the data into a form that enables the data to be accessed and/or modified by a person who is authorized to do so, then transfers the unsecured data back to the host computing device 201.

The system 200 can overcome the problem with the system 100 identified above. The security device 203 can be constructed so that the cryptographic functionality of the device 203 can itself be made secure. (Such a security device is often referred to as a security "token.") An unauthorized person can therefore be prevented (or, at least, significantly deterred) from obtaining knowledge of the operation of the security device 203, thereby preventing (or significantly deterring) that person from gaining access to, and/or modifying, the secured data.

However, the system 200 may still not always ensure adequately secured data. In particular, unsecured data may be provided by the host computing device 201 to the portable device 202 if the host computing device 201 - whether through inadvertent error or deliberate attack by a user of the host computing device 201, or through malfunction of the host computing device 201 - fails to first transfer data to the security device 203 for appropriate cryptographic treatment before providing the data to the portable device 202.

Additionally, the system 200 requires the use of two separate peripheral devices (portable device 202 and security device 203) to enable the host computing device 201 to exchange secured data with the portable device 202. For several reasons, this may be inconvenient. First, both devices 202 and 203 may not be available at the time that it

is desired to perform a secure data exchange (e.g., one may have been forgotten or misplaced). Second, even if both devices 202 and 203 are available, it may not be possible to connect both devices 202 and 203 at the same time to the host computing device 201, making use of the devices 202 and 203 cumbersome and increasing the likelihood that unsecured data is provided by the host computing device 201 to the portable device 202.

SUMMARY OF THE INVENTION

A peripheral device according to the invention can be used to communicate with a host computing device to enable one or more security operations to be performed by the peripheral device on data stored within the host computing device, data provided from the host computing device to the peripheral device (which can then be, for example, stored in the peripheral device or transmitted to yet another device), or data retrieved by the host computing device from the peripheral device (e.g., data that has been stored in the peripheral device, or transmitted to the peripheral device from another device). In particular, the peripheral device can be adapted to enable, in a single integral peripheral device, performance of one or more security operations on data, and a defined interaction with a host computing device that has not previously been integrated with security operations in a single integral device. The defined interactions can provide a variety of types of functionality (e.g., data storage, data communication, data input and output, user identification), as described further below. The peripheral device can be implemented so that the peripheral device can be operated in any one of multiple user-selectable modes: a security functionality only mode, a target functionality mode, and a combined security and target functionality mode. The peripheral device can also be implemented so that the security operations are performed in-

line, i.e., the security operations are performed between the communication of data to or from the host computing device and the performance of the defined interaction. Moreover, the peripheral device can be implemented so that the security functionality of the peripheral device is transparent to the host computing device.

A peripheral device according to the invention can advantageously enable application of security operations to a wide variety of interactions with a host computing device. In particular, a peripheral device according to the invention can accomplish this without necessity to use two peripheral devices: one that performs the security operations and one that performs the defined interaction. This can, for example, minimize the possibility that the device adapted to perform the defined interaction will be used with the host computing system without proper application of security operations to that interaction. Moreover, the provision of in-line security in a peripheral device according to the invention enables a more secure exchange of data between a host computing device and the peripheral device, overcoming the problems identified above in previous systems for performing security operations on data exchanged between such devices. Additionally, implementing a modular device according to the invention so that the performance of security operations by the modular device is transparent can reduce or eliminate the need to modify aspects of the operation of the host computing device (e.g., device drivers of the host computing device), making implementation and use of a data security system including the modular device simpler and easier. Thus, the possibility that a user will use the system incorrectly (e.g., fail to apply security operations to an interaction with the host computing device, or apply the security operations incorrectly or incompletely) is reduced. Making the security operations transparent can also enhance the security of those operations.

BRIEF DESCRIPTION OF THE DRAWINGS

FIG. 1 is a block diagram of a prior art system for enabling a host computing device to provide secured data to, and retrieve secured data from, a portable device.

FIG. 2 is a block diagram of another prior art system for enabling a host computing device to provide secured data to, and retrieve secured data from, a portable device.

FIG. 3A is a block diagram of a system according to the invention.

FIG. 3B is a perspective view of a physical implementation of the system of FIG. 3A according to one embodiment of the invention.

FIG. 4 is a block diagram of a peripheral device according to an embodiment of the invention.

FIG. 5 is a flow chart of a method, according to an embodiment of the invention, for initiating use of a system according to the invention.

FIG. 6 is a block diagram of a system, according to an embodiment of the invention, illustrating operation of the system during a method according to the invention as in FIG. 5.

FIG. 7 is a flow chart of a method, according to an embodiment of the invention, for using a peripheral device according to the invention.

FIG. 8 is a block diagram of a peripheral device according to another embodiment of the invention.

FIG. 9A is a block diagram illustrating the flow of data through the interface control device of FIG. 8.

FIG. 9B is a block diagram of a particular embodiment of an interface control device for use in a peripheral device according to the invention.

DETAILED DESCRIPTION OF THE INVENTION

FIG. 3A is a block diagram of a system 300 according to the invention. The system 300 includes a host computing

device 301 and a peripheral device 302 that communicate via a communications interface 303. Herein, "peripheral device" can refer to any device that operates outside of a host computing ~~computational~~ device and that is connected to the host computing ~~computational~~ device. The peripheral device 302 includes a security mechanism 302a that enables security operations (examples of which are described in more detail below) to be performed on data that is stored within the host computing device 301, data that is transmitted from the host computing device 301 to the peripheral ~~another~~ device 302, or data that is transmitted from the peripheral ~~another~~ device to the host computing device 301. As explained in more detail below, the peripheral device 302 also provides additional functionality (referred to herein as "target functionality") to the system 300, such as, for example, the capability to store data in a solid-state disk storage device, the capability to enable communications from the host computing device 301 to another device, the capability to accept biometric input to enable user authentication to the host computing device 301, and the capability to receive and read a smart card inserted into the peripheral device 302.

Generally, the communications interface 303 can be any embodied by any of a variety of communication interfaces, such as a wireless communications interface, a PCMCIA interface, a smart card interface, a serial interface (such as an RS-232 interface), a parallel interface, a SCSI interface or an IDE interface. Each embodiment of the communications interface 303 includes hardware present in each of the host computing device 301 and peripheral device 302 that operates in accordance with a communications protocol (which can be embodied, for example, by software stored in a memory device and/or firmware that is present in the host computing device 301 and/or peripheral device 302) appropriate for that type of communications interface, as known to those skilled in the art. Each embodiment of the

communications interface 303 also includes mechanisms to enable physical engagement, if any, between the host computing device 301 and peripheral device 302.

Generally, the security mechanism 302a can be configured to perform any electronic data security operation (herein, referred to simply as "security operation") including, for example, operations that provide one or more of the basic cryptographic functions, such as maintenance of data confidentiality, verification of data integrity, user authentication and user non-repudiation. Particular security operations that can be implemented in a peripheral device according to the invention are described in more detail below.

The security mechanism 302a can be, for example, embodied as a security token. Herein, "security token" refers to a device that performs security operations and that includes one or more mechanisms (such as, for example, use of a hardware random number generator and/or protected memory) to provide security for the content of those operations.

FIG. 3B is a perspective view of a physical implementation of the system 300 of FIG. 3A, according to one embodiment of the invention. In FIG. 3B, the peripheral device 302 is embodied as a card 312 that can be inserted into a corresponding slot 313 formed in a portable computer 311 that, in FIG. 3B, embodies the host computing device 301. Often a peripheral device according to the invention is a portable device, such as the card 312 shown in FIG. 3B. Herein, "portable device" can refer generally to any device that is capable of being easily carried by hand.

FIG. 4 is a block diagram of a peripheral device 400 according to an embodiment of the invention. The peripheral device 400 includes security functionality 401, target functionality 402 and a host interface 403 that are formed together as part of a single physical device. For example, the security functionality 401 and target functionality 402

can be enclosed in a single, card-like housing (designated in FIG. 4 by the numeral 404) conforming to a PCMCIA card or smart card standard.

The peripheral device 400 can have a number of advantageous characteristics. The peripheral device 400 can be implemented in a manner that enables the security operations of the security functionality 401 to be performed in a manner that is transparent to a host computing device (and, depending upon the particular implementation of the peripheral device 400, to a user of a system including the peripheral device 400) of a system according to the invention, so that the host computing device (and, perhaps, user) is aware only of the presence of the target functionality 402. Additionally, the peripheral device 400 can be implemented so that security operations are performed "in-line," i.e., the security operations are performed between the communication of data to or from the host computing device and the performance of the target functionality provided by the peripheral device. Further, the peripheral device 400 enables a wide variety of secure target functionality to be easily provided to a host computing device.

FIG. 5 is a flow chart of a method 500, according to an embodiment of the invention, for initiating use of a system according to the invention. The method 500 enables an aspect of the invention in which the presence of security functionality as part of a peripheral device is not detected by a host computing device, thus making the security functionality transparent to the host computing device and, depending upon the particular manner in which the security functionality is implemented, to a user of the system.

FIG. 6 is a block diagram of a system 600, according to an embodiment of the invention, illustrating operation of the system 600 during a method according to the invention such as the method 500 of FIG. 5. The system 600 includes a host

computing device 601 and a peripheral device 602. The host computing device 601 includes a display device 603a (e.g., a conventional computer display monitor) and user input device 603b (e.g., a keyboard, mouse, trackball, joystick or other appropriate device), referred to collectively hereinafter as user interface device 603. The host computing device 601 also includes, mounted within a housing 604, a processing device 605, a memory device 606, an input/output (I/O) device 607 for enabling communication with the user interface device 603, and an input/output (I/O) device 608 for enabling communication with peripheral device 602. The devices 605, 606, 607 and 608 can each be implemented by conventional such devices and can communicate with each other via a conventional computer bus 609, as is well known and understood. The peripheral device 602 includes security functionality 611, a memory device 612, an input/output (I/O) device 613 for enabling communication with the host computing device 601 and target functionality 614. The security functionality 611, memory device 612, I/O device 613 and target functionality 614 can each be implemented by conventional devices and can communicate with each other via a conventional computer bus 615, as is well known and understood. The host computing device 601 and the peripheral device 602 are shown in simplified form in FIG. 6 to facilitate clarity in illustration of this aspect of the invention; as described in more detail below and as understood by those skilled in the art, the host computing device 601 and the peripheral device 602 can - and typically will - include other devices not shown in FIG. 6.

Returning to FIG. 5, use of a system according to the invention begins when, as shown by step 501, a user of the system connects a peripheral device according to the invention to a host computing device. Such connection can occur in any manner that enables the peripheral device to communicate with the host computing device. Frequently, this

will occur as a result of a physical connection of the peripheral device to the host computing device. (In general, such physical connection can occur either before or after the host computing device begins operating; however, in the former case, subsequent steps of the method 500 - with the exception of, depending upon the implementation of the peripheral device, the step 503 - cannot be performed until the host computing device begins operating.) For example, the peripheral device can be embodied in a card or disk (e.g., a card conforming to a PCMCIA form factor as established by the appropriate standard) that is inserted into a corresponding socket formed in the host computing device. Or, the peripheral device can be embodied in a housing from which a cord extends, a plug of the cord being inserted into a mating receptacle formed in the host computing device. However, such physical connection need not necessarily occur; the peripheral device can also be connected to the host computing device by any type of wireless communication for which the host computing device contains an appropriate interface.

Once connection between the peripheral device and the host computing device is made, the host computing device detects the presence of the peripheral device, as shown by step 502. Such detection of the presence of a peripheral device is typically enabled as a standard aspect of the operating system software of the host computing device.

Typically, once the presence of a new peripheral device is detected by the operating system software of the host computing device, the operating system software (or companion software program) also identifies the type of the peripheral device. This can be accomplished, for example, by a standard software device driver (hereinafter, "host driver") for devices of the type that use the host computing device interface that is being used by the peripheral device 602. In FIG. 6, the host driver is shown stored in the memory

section 606a of the memory device 606 of the host computing device 601. (The Card Services or Socket Services programs that often are bundled with the Windows95™ operating system software for use in performing various "housekeeping" functions associated with a PCMCIA interface are ~~an~~ examples of such drivers.) However, in the method 500, before the operating system software can perform such identification, the peripheral device according to the invention suspends operation of this aspect of the operating system software, so that the peripheral device can establish its identity, as shown by step 503, and explained further below. As will be apparent from that explanation, performance of the step 503 advantageously enables the peripheral device to assume the identity of the target functionality that is part of the peripheral device. Since, as described elsewhere herein, a peripheral device according to the invention can include a variety of types of target functionality, the peripheral device can take a variety of identities.

The particular manner in which operation of the operating system software is suspended so that the peripheral device can establish its identity can depend on the characteristics of the operating system software and/or the device interface. However, for many combinations of operating system software and device interface, the operating system software waits for confirmation that the device connected to the device interface is ready for further interaction with the operating system software before the operating system software seeks to identify the type of the device connected to the interface (the standard for PCMCIA interfaces, for example, specifies such operation). In such cases, the peripheral device can be configured to delay informing the operating system software that the peripheral device is ready for further interaction until the peripheral device has established its identity.

The following description of one way in which the

step 503 can be implemented can best be understood by reference to the system 600 shown in FIG. 6. One way in which the operating system software of a host computing device can identify the type of a peripheral device is to access a known memory section of a memory device of the peripheral device, as established by an interface standard developed for that type of peripheral device, that stores data representing the type of the peripheral device. This is true for a variety of types of peripheral devices, such as, for example, peripheral devices that conform to the PCMCIA standard. (The PCMCIA standard, for example, includes a specification, called the Card Information Structure, that defines, among other things, a location in a portion of memory of a PCMCIA card, denoted as "attribute memory", that stores data identifying the type of the PCMCIA card.) In the system 600, the peripheral device 602 is such a device. The memory section of the memory device 612 of the peripheral device 602 which the host computing device 601 seeks to access is shown in FIG. 6 as the memory section 612a, and the data stored therein is referred to herein as "peripheral device identification data."

The peripheral device 602 can be implemented so that the peripheral device 602 assumes the identity of the target functionality 614 (whether or not the security functionality of the peripheral device is also being used). This enables the host computing device 601 to interact with the peripheral device 602 as though the peripheral device 602 were a device of the type of the target functionality 614, without recognizing that security functionality 611 is present that may be performing security operations. Thus, the need to modify aspects of the operation of the host computing device (e.g., the host device driver) is reduced or eliminated, making implementation and use of a data security system including the peripheral device 602 simpler and easier. Since use of the data security system is easier (e.g., a user

need not provide input to cause the host driver to be appropriately tailored to enable desired interaction with a security device), the possibility that a user will use the system incorrectly (e.g., fail to apply security operations to an interaction with the host computing device, or apply the security operations incorrectly or incompletely) is reduced.

Though, as shown in FIG. 6, the peripheral device 602 includes security functionality 611 and target functionality 614, the system 600 can be operated so that only the security functionality 611 is used. The peripheral device 602 and peripheral device driver (discussed below) can be implemented so that, when the peripheral device 602 is operated in that way, the peripheral device identification data stored in the memory location 612a identifies the peripheral device 602 as a security device.

Returning to FIG. 5, after the peripheral device has established its identity, the host computing device identifies the peripheral device, as shown by step 504. This can be implemented as part of the host driver, as indicated above.

Once the host computing device has identified the peripheral device (and other host computing device operating system software operations concluded, if applicable), the user can begin using the peripheral device (in particular, the security functionality of the peripheral device), as shown by step 505 of the method 500. Such use can be enabled by one or more software programs (referred to collectively hereinafter as a "peripheral device driver," though such programs can include programs in addition to those conventionally termed "drivers," such as programs conventionally termed "applications") that are executed by the host computing device.

The use of a separate driver to control and interact with the security functionality of a peripheral device

according to the invention can be advantageous because it reduces or eliminates the need to modify the host driver. As a practical matter, such modification of the host driver can likely only be accomplished by requiring a user to interact with a standard host driver to appropriately modify the standard host driver. This is undesirable because the user may forget to modify the driver or modify the driver incorrectly or incompletely.

The peripheral device driver can have previously been installed on a data storage device (e.g., hard disk) of the host computing device (in FIG. 6, the peripheral device driver is shown stored in the memory section 606b of the memory device 606 of the host computing device 601), or can be made accessible to the host computing device via an appropriate interface (such as a floppy disk drive, CD-ROM drive or network connection) at a time when the user wishes to initiate interaction between the host computing device and the peripheral device. Additionally, when a peripheral device according to the invention is used with a host computing device which utilizes operating system software that supports the feature ~~colloquially~~ informally referred to as "plug and play", it is also possible to store the peripheral device driver in a memory device of the peripheral device and configure the peripheral device so that, when the peripheral device is connected for the first time to a particular host computing device, the host computing device automatically provides the user with the opportunity to instruct the host computing device to cause the peripheral device driver to be transferred from the peripheral device to the host computing device.

FIG. 7 is a flow chart of a method 700, according to an embodiment of the invention, for using a peripheral device according to the invention. It is to be understood that the method 700 shown in FIG. 7 is not the only way to enable the aspects of use of a peripheral device according to the

invention that are illustrated in FIG. 7; as can be readily appreciated by those skilled in the art, such aspects can be implemented using any of a variety of other appropriate methods. Further, the use of a peripheral device according to the invention can include aspects not illustrated in FIG. 7; likewise, such use may not include some of the aspects illustrated in FIG. 7. The method 700 of FIG. 7 is shown merely to aid in the illustration of certain aspects of the invention, and should not be interpreted as restricting the manner in which a peripheral device according to the invention can be used.

To begin using a peripheral device according to the invention, a user instructs the host computing device to begin execution of the peripheral device driver, as shown by step 701 of the method 700, the user having obtained knowledge of the appropriate command to begin execution of the peripheral device driver in any appropriate manner (e.g., from a user manual accompanying the peripheral device driver and/or the peripheral device). In general, the steps of the method 700 occur as a result of operation of a peripheral device driver; however, operation of the host driver may be necessary or desirable to enable some aspects of the method 700 (e.g., execution of a transaction, as in steps 708, 712 and 715).

As indicated above, a peripheral device according to the invention can be implemented so that the host driver cannot detect the presence of the security functionality of the peripheral device. In such case, the peripheral device driver enables the detection of the security functionality, as shown by step 702 of the method 700. This can be accomplished by including instructions as part of the peripheral device driver that, when the peripheral device driver first begins executing, cause the peripheral device driver to access a predefined location of a memory device of the peripheral device (in FIG. 6, the memory section 612b)

for data that identifies whether the peripheral device is a device having security functionality that is compatible with the peripheral device driver. If the peripheral device is such a device, then the peripheral device driver can enable the user to make use of the security functionality of the peripheral device. Further, the peripheral device driver can be implemented, as shown in FIG. 7, so that, if the proper security functionality is not detected, execution of the peripheral device driver terminates, preventing use of the peripheral device. Alternatively, the peripheral device driver can be implemented so that, if the proper security functionality is not detected, the target functionality of the peripheral device can be used without the security functionality of the peripheral device.

A peripheral device according to the invention can, in general, be operated in one of three modes: 1) a mode in which only the security functionality is used, 2) a mode in which both the security functionality and the target functionality are used, and 3) a mode in which only the target functionality is used. The user can be enabled to, via the peripheral device driver, select any one of the three modes of operation. However, in some applications, it may be desirable to inhibit operation in one or two of the modes. In particular, it may be desirable to prevent operation of the peripheral device in the last of the above-listed modes, i.e., a mode in which the security functionality is not used, if it is desired to ensure that use of the target functionality can only occur with the application of one or more security operations. This could be accomplished by implementing the peripheral device driver so that the option to operate in that mode is not presented to the user, or the peripheral device could be configured during manufacture to prohibit operation in that mode. For example, if the target functionality is embodied as a communications device or a memory device, it may be desirable to ensure that unencrypted

data cannot be transferred via the communications device or stored in the memory device, whether done inadvertently or on purpose.

In the method 700, all three of the above-listed modes are available for use. In the step 703 of the method 700, a determination is made as to whether the security functionality is to be used. (As noted above, such use may be required.) If yes, the peripheral device is operated in one of the first two modes above (security functionality only, or security functionality plus peripheral functionality); if no, the third mode is used (peripheral functionality only).

The peripheral device driver can be implemented so that the user must successfully enter an acceptable access code (e.g., a password or PIN) before the user is enabled to use the peripheral device. In particular, it can be desirable to require an access code before enabling a user to use the security functionality, thus establishing a layer of security that protects the integrity of the security operations themselves. In the method 700, as shown by the step 704, an acceptable access code must be entered by the user before the security functionality of the peripheral device can be used. An access code can be entered, for example, by inputting the access code in a conventional manner using a user interface device (e.g., keyboard) of the host computing device. Or, an access code can be entered using particular embodiments of target functionality (such as a biometric device, discussed in more detail below) that is part of the peripheral device according to the invention.

Advantageously, an access code can be used not only to control access to the security (or other) functionality of the peripheral device, but also to identify a "personality" of the user. Each personality is represented by data that establishes certain characteristics of operation of the peripheral device, such as, for example, restrictions on

operation of the peripheral device (e.g., limitations on the types of security operations that can be performed) or specification of operating parameters or characteristics (e.g., cryptographic keys or specification of a particular incarnation of a type of security algorithm, such as a particular encryption algorithm). A single user can have multiple personalities: each personality might, for example, correspond to a different capacity in which a user acts. Data representing personalities and corresponding user access codes can be stored in a memory device of the peripheral device.

Upon receipt of an acceptable access code, the peripheral device driver controls the host computing device to present a user interface that enables the user to effect desired control of the peripheral device, and, in particular, to use the peripheral device to perform security operations, as described below. (If access codes are also used to identify personalities, upon receipt of an acceptable access code, the peripheral device driver can also access and retrieve the data representing the corresponding personality, so that the operation of the peripheral device can be controlled accordingly.) The user interface for enabling a user to operate the peripheral device can be implemented in any of a variety of well known ways (e.g., as a graphical user interface) using methods and apparatus that are well known to those skilled in the art. Generally, the user interface enables the user to perform any functionality that is provided by the peripheral device, as described in more detail elsewhere herein.

As indicated above, a peripheral device according to the invention can be operated ~~implemented~~ in any of three modes. Once an acceptable access code has been entered, the peripheral device driver can enable the user to select one of the three modes, as shown in step 705 of the method 700. (Alternatively, as mentioned above, it may be desirable to

present the user only with the option of choosing the security functionality only mode or the security functionality plus peripheral functionality mode, so as to eliminate the possibility that the user will effect an unsecured use of the target functionality.) If the security functionality only mode, or the security functionality plus peripheral functionality mode, is selected, then the user interface (and the underlying peripheral device driver) enables the user to input all desired or required instructions regarding the security operations to be performed for a particular "transaction" (e.g., a storage of data in a memory device, a transmission of data by a communications device, or an exchange of data with a smart card reader device), as shown by steps 706 and 710 of the method 700. For example, the user interface can enable the user to select data to which security operations are to be performed, specify the application of particular security operations to data, or specify parameters or other information required for a particular security operation. If the security functionality plus peripheral functionality mode, or the peripheral functionality only mode, is selected, then the user interface and peripheral device driver enable the user to input all desired or required instructions regarding use of the target functionality for the transaction, as shown by steps 707 and 711 of the method 700. For example, if the target functionality is embodied as a memory device, the user interface can enable the user to specify a name for the stored data. Or, for example, if the target functionality is embodied as a communications device, the user interface can enable the user to specify a destination (e.g., an electronic mail address) for the data.

Once the user has provided instructions in steps 706 and 707, in step 710, or in step 711, the transaction is executed, as shown by step 708 or step 712 of the method 700. After execution of the transaction, the user can be allowed

to execute further transactions, as shown by step 709 of the method 700. It is also possible for the user to begin using another personality (by entering an appropriate access code), as shown by step 709 of the method 700. Eventually, use of the peripheral device ends, as shown by step 718 of the method 700.

The peripheral device and associated peripheral device driver can be implemented so that it is possible to use only the security functionality of the peripheral device. ~~This~~ The peripheral device can be used in this manner to, for example, encrypt or decrypt data stored on the host computing device by receiving the data from the host computing device, encrypting or decrypting the data as appropriate, then returning the encrypted or decrypted data to the host computing device.

As indicated above, the peripheral device and associated peripheral device driver can be implemented so that it is possible to use only the target functionality of the peripheral device, even without entering an appropriate access code. In the method 700, such operation is shown by the steps 714, 715 and 716, which function in the same manner as steps 711, 712 and 709, described above. Using the peripheral device in this way can be useful, for example, when the target functionality is embodied as a biometric device, as described further below, that is used to perform user authentication. In particular, if the biometric device is to be used as the mechanism to enter the access code in step 704, operation in this mode may be necessary (depending on the capabilities of the biometric device) to enable such use of the biometric device. The step 717 can also enable use of the security functionality to begin by causing a prompt for an appropriate access code to appear (step 704). Again, eventually, use of the peripheral device ends (step 718).

As described above, a peripheral device according to the

invention that includes security functionality and target functionality can be implemented so that the host computing device is not aware of the presence of the security functionality. It may also be desirable to shield the user from knowledge of the presence of the security functionality and cause predetermined security operations to be performed automatically. This may be desirable so that, for example, it is not necessary for the user to provide input regarding the performance of security operations, thus eliminating the possibility that the user will neglect to provide such input, or will provide the input incorrectly or incompletely. Or, it may be desirable to make security operations transparent to users to enhance the security of those operations, since, if the performance of such operations is unknown, there will be no attempt to defeat the security provided by those operations. If such is the case, the peripheral device driver can be implemented so that the peripheral device can operate only in the security functionality plus peripheral functionality mode (steps 710, 711, 712, 714, 715, 716 and 717 of the method 700 cannot be performed) and so that no indication (e.g., presentation of a user interface display that allows input of instructions regarding the performance of security operations, as in step 706 of the method 700) is given of the presence of the security functionality of the peripheral device. Rather, the user would simply be presented with options regarding operation of the target functionality (step 707 of the method 700). In such an implementation, the peripheral device driver can be implemented to automatically cause one or more predetermined security operations to be performed based upon a user-specified interaction with the target functionality, or the peripheral device can be configured to cause such security operations to be performed any time a specified interaction with the target functionality occurs.

A significant advantage of a peripheral device according

to the invention is that the peripheral device can be implemented so that any of a variety of types of target functionality can be included as part of the peripheral device. In particular, as described in more detail below, the peripheral device includes an interface control device which enables and manages communications between and among the host computing device, a cryptographic processing device that is part of the peripheral device, and target functionality that is also part of the peripheral device. The interface control device can be adapted to provide an appropriate interface for each type of target functionality. Thus, in general, any desired target functionality can be used with a peripheral device according to the invention, so long as the target functionality is implemented so as to enable communication with an interface of the type presented. Those skilled in the art of data communications can readily understand how to implement such communication with target functionality in view of the detailed description below (see FIGS. 8, 9A and 9B) of an embodiment of a peripheral device according to the invention, and, in particular, an interface control device of such a peripheral device.

For example, target functionality of a peripheral device according to the invention can be embodied as a memory device adapted to enable non-volatile storage of data. In general, any such memory device can be used to embody such target functionality. More particularly, a solid-state disk storage device (e.g., NAN flash memory device) can advantageously be used. Illustratively, a memory device that can be used to embody target functionality in a peripheral device according to the invention can be a compact flash memory device, such as an ATA format flash disk drive. Other solid-state disk storage devices, such as SCSI disks and IDE disks can be used. The construction and operation of memory devices in general, as well as those identified particularly above, is well understood by those skilled in that art, so that,

together with an understanding of the required communication capability between the target functionality and the interface control device, a memory device for use with the invention can be easily constructed and operated. A peripheral device according to the invention that includes a memory device that embodies the target functionality can be used, for example, to securely store data in a manner that enables a user of the data to easily carry the data with them wherever they go.

Target functionality of a peripheral device according to the invention can also be embodied as a communications device adapted to enable communication between the host computing device and a remote device. In general, any such communications device can be used to embody target functionality. A communications device that can be used to embody target functionality in a peripheral device according to the invention can include, for example, a data communications modem (such as, for example, a conventional telephone line modem, an ISDN modem, a cable modem, or a wireless modem) or a LAN transceiver (either wired or wireless and, in the latter case, operating in, for example, the infrared or radiofrequency spectrum). The construction and operation of communication devices in general, as well as those identified particularly above, is well understood by those skilled in that art, so that, together with an understanding of the required communication capability between the target functionality and the interface control device, a communication device for use with the invention can be easily constructed and operated. A peripheral device according to the invention that includes a communications device that embodies target functionality can be used, for example, to encrypt electronic mail before transmission to an addressee. Or, such a peripheral device can be used, for example, to encrypt data files that a person wishes to securely transfer between a computing device at the person's place of work and a computing device at the person's home.

Target functionality of a peripheral device according to the invention can also be embodied as a biometric device, which is defined herein as any device that is adapted to receive input data regarding a physical characteristic of a person based upon a physical interaction of the person with the device. In general, any such biometric device can be used to embody target functionality. Biometric devices that can be used in a peripheral device according to the invention can include, for example, a fingerprint scanning device, a retinal scanning device or a faceprint scanning device.

In addition to conventional computational devices for storing and/or manipulating digital data, a biometric device includes a sensor for sensing the physical characteristic, and an analog-to-digital converter to transform the analog data representing the sensed characteristic into digital data. For example, a fingerprint scanning device includes a sensor upon which a person can place a finger, the sensor sensing the fingerprint of the finger, the content of the sensed fingerprint being converted into digital data by the device. Similarly, a retinal scanning device includes a sensor which can be placed proximate to a person's eye, the sensor sensing characteristics of the eye such as blood vessel pattern or iris pattern, the device translating the content of the sensed characteristics into digital data. The construction and operation of biometric devices in general, as well as those identified particularly above, is well understood by those skilled in that art, so that, together with an understanding of the required communication capability between the target functionality and the interface control device, a biometric device for use with the invention can be easily constructed and operated. Fingerprint scanning devices and retinal scanning devices that can readily be modified for use with the invention, i.e. to communicate with an interface control device according to the invention, are known to those skilled in that art. For example, fingerprint

scanning devices such as those available from Identix Incorporated of Sunnyvale, California can be used in a fingerprint scanning device for use with the invention.

A peripheral device according to the invention that includes a biometric device that embodies the target functionality can be used, for example, to enable user authentication to a host computing device before allowing access to particular data stored on the host computing device. Such user authentication can be accomplished by using a biometric device to obtain biometric data from a user and comparing the biometric data to an appropriate library of biometric data representing a predetermined group of people (e.g., authorized users). The library of data can be stored in a memory device of the peripheral device.

When a peripheral device including a fingerprint scanning device is embodied as a card adapted to be inserted into a slot of a host computing device (e.g., a slot conforming to a PCMCIA standard), it may be useful to make the peripheral device relatively long, so that a portion of the card on which the sensor is positioned can extend from the slot of the host computing device, thereby enabling fingerprints to be scanned while the peripheral device is inserted in the host computing device. Similarly, for a fingerprint scanning device, retinal scanning device or faceprint scanning device, it may be desirable to form the device so that the sensor is connected to the remainder of the device via an appropriate communication line, thus providing some range of movement of the sensor while the peripheral device is inserted in the host computing device, thereby facilitating use of the device.

A biometric device can be used in different ways with a system according to the invention, depending upon the capabilities of the biometric device. Using known apparatus and methods, a "smart" biometric device can be implemented with the capability to detect the presence of an input to the

sensor, and, upon such detection, initiate acquisition of the biometric data and performance by the peripheral device of the appropriate data comparison. Such a biometric device can be used to perform user authentication as in step 704 of the method 700 above. Alternatively, the biometric device may be "stupid" and require that a user initiate the data acquisition and authentication process. Such a biometric device can be used to perform user authentication in a peripheral device that allows operation without entry of a proper access code, as in steps 714 and 715 of the method 700.

Target functionality of a peripheral device according to the invention can ~~be~~ be also embodied as a smart card reader device adapted to communicate with a smart card, such as, for example, a smart card compliant with the ISO 7816 standard. Such a device can be implemented by adapting a conventional smart card reader, the construction and operation of which is well known to those skilled in that art, ~~with~~ to provide a communications interface that enables the smart card reader to communicate with the interface control device. A peripheral device according to the invention that includes a smart card reader device can be used to provide security features to a smart card reader, or add to existing security features of a smart card reader.

It is to be understood that the examples given above are merely illustrative, not exhaustive, of the ways in which a peripheral device according to the invention can be used. Many more possibilities exist.

FIG. 8 is a block diagram of a peripheral device 800 according to another embodiment of the invention. The peripheral device 800 includes a cryptographic processing device 801, an interface control device 802, a first memory device 803, a second memory device 804, a real-time clock 805, a host computing device input/output (I/O) interface 806 and target functionality 807.

The host computing device I/O interface 806 enables communications between the peripheral device 800 and a host computing device. The electrical and mechanical characteristics of the I/O interface 806, as well as the protocol used to enable communication via the interface 806, are established in any manner that conforms to the industry standard specifications for an interface of that type. For example, a peripheral device according to the invention can be adapted for insertion into a PCMCIA slot of a host computing device. In such a peripheral device, the electrical and mechanical characteristics and communications protocol for the host computing device I/O interface 806 are established in conformance with the appropriate PCMCIA standards.

The cryptographic processing device 801 can be adapted to perform security operations. Generally, the cryptographic processing device 801 can be embodied by any processor capable of performing the cryptographic operations desired to be provided by the peripheral device 800. In one embodiment of the peripheral device 800, the cryptographic processing device 801 is a special purpose embedded processor, embodied on a single integrated chip and designated as MYK-82 (and also referred to by the name Capstone), which includes an ARM6™ processor core and several special purpose cryptographic processing elements that have been developed by the Department of Defense. The construction and operation of the Capstone chip is known by those skilled in the art of cryptographic processing.

The first memory device 803 can be a non-volatile data storage device which can be used to store computer programs and persistent data. The first memory device 803 can be implemented by any appropriate such device (of which there are many conventional, readily available incarnations), such as, for example, a conventional flash memory device.

The second memory device 804 can be a volatile data

storage device that can also be a rapidly accessible data storage device in which frequently used data and program instructions can be stored during operation of the peripheral device 800. The second memory device 804 can also be implemented by any appropriate such device (of which there are many conventional, readily available embodiments), such as, for example, a conventional random access memory (RAM) device.

The real-time clock 805 enables the creation of time stamps, which can be used in a number of security operations. Advantageously, the time stamps created by the real-time clock 805 are more secure than those that could otherwise be produced by the relatively insecure clock of a host computing device. The real-time clock 805 includes a conventional battery backup device that maintains power to the real-time clock 805 when the peripheral device 800 is not in use (i.e., when power is not supplied to the peripheral device 800), so that the correct time is continuously preserved within the peripheral device 800. The real-time clock 805 (including battery backup) can be embodied by any conventional such device, such as the DS1302 clock available from Dallas Semiconductor of Dallas, Texas.

In the peripheral device 800, the interface control device 802 mediates the interaction between the host computing device, the target functionality 807 and the cryptographic processing device 801. In one embodiment of the peripheral device 800, the interface control device 802 is a conventional field-programmable gate array (FPGA) that is programmed to perform the functions that it is desired to implement with the interface control device 802, as described in more detail below. The interface control device 802, under control of the cryptographic processing device 801, can be adapted to enable the peripheral device 800 to assume the identity of the target functionality 807, as discussed above. The interface control device 802 also enables the in-line

cryptography aspect of the invention, since the interface control device 802 controls the flow of data between the host computing device and the target functionality 807.

FIG. 9A is a block diagram illustrating the flow of data through the interface control device 802 of FIG. 8. Data transferred from a host computing device enters the peripheral device 800 (not demarcated in FIG. 9A) through the host computing device I/O interface 806. The interface control device 802 presents the data to a cryptographic processing device interface 808 (not shown in FIG. 8). Depending on the configuration of the interface control device 802, as determined by operation of the peripheral device driver and/or by settings established during the manufacture of the peripheral device 800, the data may or may not be processed by the cryptographic processing device 801 (FIG. 8). Typically (or, in some cases, necessarily), as discussed in more detail above, cryptographic processing will occur. The interface control device 802 then causes the data to be transferred to the target functionality 807. Data being transferred from the target functionality 807 to the host computing device follows a similar path in the reverse direction. When the target functionality 807 is not present or is not being used, data transferred from the host computing device, after being presented to the cryptographic processing device interface 808 and being processed by the cryptographic processing device 801, is caused to be transferred back to the host computing device I/O interface 806 (and, from there, to the host computing device) by the interface control device 802.

FIG. 9B is a block diagram of a particular embodiment of an interface control device 910 for use in a peripheral device according to the invention. As shown in FIG. 9B, the host computing device communicates via a PCMCIA interface and the target functionality is embodied by a compact flash memory device. Those skilled in the art will readily

appreciate how the interface control device 910 can be modified for use with other host computing device interfaces and/or target functionalities.

The interface control device 910 includes sets of configuration registers 911. The data stored in the configuration registers 911 establish operating characteristics of the interface control device: in particular, the content of the configuration registers enables the interface control device to present to the host computing device a desired identification of the peripheral device, and determines whether data passing through the peripheral device must be subjected to security operations.

A set of configuration registers is maintained for the host computing device I/O interface, the cryptographic processing device interface, and the target functionality interface. In particular, the content of the host computing device I/O interface configuration registers is such that the interaction of the host computing device with the peripheral device is the same as if the security functionality were not present (unless the data security system is operating in security functionality only mode). The content of the target functionality interface registers reflects the presence of the security functionality. The cryptographic processing device interface registers bridge the gap between the other two sets of registers.

The remainder of the functional blocks of the interface control device 910 shown in FIG. 9B perform functions and operate in a manner that can readily be understood by those skilled in the art from the designation and interconnection of those blocks in FIG. 9B.

In general, the security functionality of a peripheral device according to the invention can be configured to perform any cryptographic operation, as well as other, related mathematical operations. A configuration of the security functionality that enables a particular

cryptographic or mathematical operation can be produced, for example, by using appropriate existing cryptographic software, application-specific hardware, or combination of the two, as known by those skilled in the art of producing cryptographic devices. Following is a description of exemplary cryptographic and mathematical operations that can be implemented as part of the security functionality of a peripheral device according to the invention. These cryptographic and mathematical operations are well-known and can readily be implemented in a peripheral device according to the invention by a person of skill in the art of cryptography.

For example, a peripheral device according to the invention can implement one or more cryptographic key exchange operations. Any key exchange operation can be implemented, such as, for example, the Department of Defense Standard, the RSA, the Diffie-Hellman, and the X9.42 (ANSI Banking Standard) key exchange algorithms.

A peripheral device according to the invention can also implement one or more hash operations. Any hash operation can be implemented, such as, for example, the FIPS 180-1 (SHA-1), the Message Digest 2 (RSA), and the Message Digest 5 (RSA) algorithms.

A peripheral device according to the invention can also implement one or more digital signature operations. Any digital signature operation can be implemented, such as, for example, the FIPS 186 (DSA - 512, 1024) and the RSA Signature (512, 768, 1024, 2048) algorithms.

A peripheral device according to the invention can also implement one or more key wrapping operations for both symmetric and asymmetric keys. A key wrapping operation can ensure that plaintext keys are not accessible external to the peripheral device. Any key wrapping operation can be implemented.

A peripheral device according to the invention can also

implement one or more symmetric encryption operations. Any symmetric encryption operation can be implemented, such as, for example, the FIPS 185 (implemented completely in hardware), the DES (including 3DES, EDE3, CBC and ECB), the RC-2 and the RC-4 algorithms.

A peripheral device according to the invention can also implement one or more asymmetric (public key) encryption operations. While asymmetric encryption operations underlie the key exchange operations described above, asymmetric key operations can also be used independently in a peripheral device according to the invention for bulk encryption. Any asymmetric encryption operation can be implemented, such as, for example, the RSA and Diffie-Hellman algorithms.

A peripheral device according to the invention can also implement one or more exponentiation operations, which are required in many cryptographic operations. Any exponentiation operation can be implemented. Since ~~peripheral~~ exponentiation requires a significant amount of processing time relative to other mathematical operations, it can be desirable to implement an exponentiation operation in dedicated hardware. In one embodiment of a peripheral device according to the invention, the security functionality of the peripheral device includes a full 1024 bit exponentiator implemented in hardware.

Various embodiments of the invention have been described. The descriptions are intended to be illustrative, not limitative. Thus, it will be apparent to one skilled in the art that certain modifications may be made to the invention as described above without departing from the scope of the claims set out below.

We claim:

1. A peripheral device, comprising:

security means for enabling one or more security operations to be performed on data;

target means for enabling a defined interaction with a host computing device;

means for enabling communication between the security means and the target means;

means for enabling communication with a host computing device; and

means for operably connecting the security means and/or the target means to the host computing device in response to an instruction from the host computing device.

2. A peripheral device as in Claim 1, wherein the target means comprises means for non-volatilely storing data.

3. A peripheral device as in Claim 1, wherein the target means comprises means for enabling communication between the host computing device and a remote device.

4. A peripheral device as in Claim 1, wherein the target means comprises a biometric device.

5. A peripheral device as in Claim 1, wherein the target means comprises means for communicating with a smart card.

6. A peripheral device as in Claim 1, further comprising means for mediating communication of data between the host computing device and the target means so that the communicated data must first pass through the security means.

7. A peripheral device as in Claim 1, further

comprising means for providing to a host computing device, in response to a request from the host computing device for information regarding the type of the peripheral device, information regarding the function of the means for enabling ~~a defined interaction with a host computing device.~~

11
~~8~~. A peripheral device, comprising:

security means for enabling one or more security operations to be performed on data;

target means for enabling a defined interaction with a host computing device;

means for enabling communication between the security means and the target means;

means for enabling communication with a host computing device; and

means for mediating communication of data between the host computing device and the target means so that the communicated data must first pass through the security means.

12 11
~~9~~. A peripheral device as in Claim ~~8~~, wherein the target means comprises means for non-volatilely storing data.

15 11
~~10~~. A peripheral device as in Claim ~~8~~, wherein the target means comprises means for enabling communication between the host computing device and a remote device.

19 11
~~11~~. A peripheral device as in Claim ~~8~~, wherein the target means comprises a biometric device.

22 11
~~12~~. A peripheral device as in Claim ~~8~~, wherein the target means comprises means for communicating with a smart card.

Sub a5 13. A peripheral device as in Claim 8, further

comprising means for providing to a host computing device, in response to a request from the host computing device for information regarding the type of the peripheral device, information regarding the function of the means for enabling a defined interaction with a host computing device.

14. A peripheral device, comprising:

security means for enabling one or more security operations to be performed on data;

target means for enabling a defined interaction with a host computing device;

means for enabling communication between the security means and the target means;

means for enabling communication with a host computing device; and

means for providing to a host computing device, in response to a request from the host computing device for information regarding the type of the peripheral device, information regarding the function of the means for enabling a defined interaction with a host computing device.

25 15. A peripheral device as in Claim 24, wherein the target means comprises means for non-volatilely storing data.

28 16. A peripheral device as in Claim 24, wherein the target means comprises means for enabling communication between the host computing device and a remote device.

32 17. A peripheral device as in Claim 24, wherein the target means comprises a biometric device.

35 18. A peripheral device as in Claim 24, wherein the target means comprises means for communicating with a smart card.

19. A peripheral device, comprising:

security means for enabling one or more security operations to be performed on data;

a solid-state disk storage device for storing data;

means for enabling communication between the security means and the solid-state disk storage device; and

means for enabling communication with a host computing device.

20. A peripheral device as in Claim 1, wherein the solid-state disk storage device comprises an ATA format flash disk drive.

21. A peripheral device, comprising:

security means for enabling one or more security operations to be performed on data;

means for wirelessly communicating with a remote device;

means for enabling communication between the security means and the wireless communication means; and

means for enabling communication with a host computing device.

22. A peripheral device as in Claim 21, wherein the wireless communication means comprises a wireless modem.

23. A peripheral device as in Claim 21, wherein the wireless communication means comprises a wireless LAN transceiver.

24. A peripheral device, comprising:

security means for enabling one or more security operations to be performed on data;

a biometric device for receiving input data

regarding a physical characteristic of a person based upon a physical interaction of the person with the peripheral device;

means for enabling communication between the security means and the biometric device; and

means for enabling communication with a host computing device.

25. A peripheral device as in Claim 24, wherein the biometric device comprises a fingerprint scanning device.

26. A peripheral device as in Claim 24, wherein the biometric device comprises a retinal scanning device.

27. A peripheral device, comprising:

security means for enabling one or more security operations to be performed on data;

means for communicating with a smart card;

means for enabling communication between the security means and the smart card communication means; and

means for enabling communication with a host computing device.

28. A data security system, comprising:

a host computing device including one or more device interfaces adapted to enable communication with another device;

a peripheral device, comprising:

security means for enabling one or more security operations to be performed on data;

target means for enabling a defined interaction with a host computing device;

means for enabling communication between the security means and the target means;

means for enabling communication with a host computing device; and

means for operably connecting the security means and/or the target means to the host computing device in response to an instruction from the host computing device.

36
~~29~~. A data security system, comprising:

a host computing device including one or more device interfaces adapted to enable communication with another device;

a peripheral device, comprising:

security means for enabling one or more security operations to be performed on data;

target means for enabling a defined interaction with a host computing device; and

means for enabling communication between the security means and the target means;

means for enabling communication with a host computing device; and

means for mediating communication of data between the host computing device and the target means so that the communicated data must first pass through the security means.

Sub A9

30. A data security system, comprising:

a host computing device including one or more device interfaces adapted to enable communication with another device;

a peripheral device, comprising:

security means for enabling one or more security operations to be performed on data;

target means for enabling a defined interaction with a host computing device; and

means for enabling communication between the

security means and the target means;

means for enabling communication with a host computing device; and

means for providing to a host computing device, in response to a request from the host computing device for information regarding the type of the peripheral device, information regarding the function of the means for enabling a defined interaction with a host computing device.

30. 31. For use in a peripheral device adapted for communication with a host computing device, performance of one or more security operations on data, and interaction with a host computing device in a defined way, a method comprising the steps of:

receiving a request from a host computing device for information regarding the type of the peripheral device; and

providing to the host computing device, in response to the request, information regarding the type of the defined interaction.

Sub A10

32. For use in a peripheral device adapted for communication with a host computing device, performance of one or more security operations on data, and interaction with a host computing device in a defined way, a method comprising the steps of:

receiving an instruction from a host computing device regarding operation of the peripheral device; and

performng security operations and/or the defined interaction in response to the instruction from the host computing device.

add A11

PERIPHERAL DEVICE WITH INTEGRATED SECURITY FUNCTIONALITY

William P. Bialick
Mark J. Sutherland
Janet L. Dolphin-Peterson
Thomas K. Rowland
Kirk W. Skeba
Russell D. Housley

ABSTRACT

The invention enables a peripheral device to communicate with a host computing device to enable one or more security operations to be performed by the peripheral device on data stored within the host computing device, data provided from the host computing device to the peripheral device (which can then be, for example, stored in the peripheral device or transmitted to yet another device), or data retrieved by the host computing device from the peripheral device (e.g., data that has been stored in the peripheral device ~~or~~ transmitted to the peripheral device from another device). In particular, the peripheral device can be adapted to enable, in a single integral peripheral device, performance of one or more security operations on data, and a defined interaction with a host computing device that has not previously been integrated with security operations in a single integral device. The defined interactions can provide a variety of types of functionality (e.g., data storage, data communication, data input and output, user identification), ~~as described further below~~. The peripheral device can also be implemented so that the security operations are performed in-line, i.e., the security operations are performed between the communication of data to or from the host computing device and the performance of the defined interaction. Moreover, the peripheral device can be implemented so that the security functionality of the peripheral device is transparent to the host computing device.

DECLARATION AN OWER OF ATTORNEY FOR PAT APPLICATION

As a below named inventor, I hereby declare that:

My residence, post office address and citizenship are as stated below adjacent to my name.

I believe I am the original, first and sole inventor (if only one name is listed below) or an original, first and joint inventor (if plural names are listed below) of subject matter (process, machine, manufacture, or composition of matter, or an improvement thereof) which is claimed and for which a patent is sought by way of the application entitled: Peripheral Device With Integrated Security Functionality

which (check) [X] is attached hereto.
[ ] and is amended by the Preliminary Amendment attached hereto.
[ ] was filed on _____ as Application Serial No. _____.
[ ] and was amended on _____ (if applicable).

I hereby state that I have reviewed and understood the contents of the above-identified application, including the claims, as amended by any amendment referred to above.

I acknowledge the duty to disclose to the United States Patent and Trademark Office information known to me to be material to the examination of this application in accordance with Title 37, Code of Federal Regulations, § 1.56(a).

I hereby claim the priority benefit under Title 35, United States Code, § 119 of any foreign application(s) for patent or inventor's certificate listed below and have also identified below any foreign application for patent or inventor's certificate for the same invention having a filing date before that of the application on which priority is claimed:

Prior Foreign Application(s)			Priority Claimed	
N/A			Yes	No
(Number)	(Country)	(Date Filed)		
			Yes	No
(Number)	(Country)	(Date Filed)		

I hereby claim the priority benefit under Title 35, United States Code, §§ 119 and 365(a) of any international patent application(s), listed below, that do not designate the United States, but do designate at least one country other than the United States, and have also identified below any such international application for the same invention having a filing date before that of the application on which priority is claimed:

Prior International Application(s)		Priority Claimed	
N/A		Yes	No
(Number)	(Date Filed)		
		Yes	No
(Number)	(Date Filed)		

I hereby claim the prior benefit under Title 35, ited States Code, § 119(e) of the United States provisional patent application(s) listed below and, insofar as any subject matter of the claims of this application is not disclosed in such prior United States provisional application(s) in the manner provided by the first paragraph of Title 35, United States Code, § 112, I acknowledge the duty to disclose material information as defined in Title 37, Code of Federal Regulations, § 1.56(a) which became available between the filing date of the prior provisional application(s) and the national or PCT international filing date of this application:

(Appl. Ser. No.)	(Date Filed)	(Status-patented, pending, abandoned)
N/A		

I hereby claim the priority benefit under Title 35, United States Code, § 120 of the United States patent application(s) listed below and, insofar as any subject matter of the claims of this application is not disclosed in such prior United States application(s) in the manner provided by the first paragraph of Title 35, United States Code, § 112, I acknowledge the duty to disclose material information as defined in Title 37, Code of Federal Regulations, § 1.56(a) which became available between the filing date of the prior application(s) and the national or PCT international filing date of this application:

(Appl. Ser. No.)	(Date Filed)	(Status-patented, pending, abandoned)
N/A		

I hereby claim the priority benefit under Title 35, United States Code, §§ 120 and 365(c) of any international patent application(s), listed below, that designate the United States and have also identified below any such international application for the same invention having a filing date before that of the application(s) on which priority is claimed, and, insofar as any subject matter of the claims of this application is not disclosed in such prior international application(s) in the manner provided by the first paragraph of Title 35, United States Code, § 112, I acknowledge the duty to disclose material information as defined in Title 37, Code of Federal Regulations, § 1.56(a) which became available between the filing date of the prior international application(s) and the national or PCT international filing date of this application:

Prior International Application(s)		Priority Claimed	
(Number)	(Date Filed)		
N/A		Yes	No
(Number)	(Date Filed)	Yes	No

I hereby appoint the following attorney, with full power of substitution, to prosecute this application and to transact all business in the United States Patent and Trademark Office connected therewith: David R. Graham, Reg. No. 36,150.

Please address all correspondence regarding this application to David R. Graham, 1337 Chewpon Avenue, Milpitas, California 95035.

Please direct all telephone calls regarding this application to David R. Graham at telephone number (408) 945-9912.

I hereby declare that all statements made herein of my own knowledge are true and that all statements made herein on information and belief are believed to be true; and further that these statements were made with the knowledge that willful false statements and the like so made are punishable by fine or imprisonment, or both, under Title 18, United States Code, § 1001 and that such willful false statements may jeopardize the validity of the application or any patent issued thereon.

Inventor's signature _____ Date _____
Full name of inventor William P. Bialick
Residence Clarksville, Maryland Citizenship US
Post Office Address 7150 Moorland Drive
Clarksville, Maryland 21029-1735

Inventor's signature _____ Date _____
Full name of inventor Mark J. Sutherland
Residence Milpitas, California Citizenship US
Post Office Address 1209 Eagle Ridge Way
Milpitas, Califonia 95035-7817

Inventor's signature _____ Date _____
Full name of inventor Janet L. Dolphin-Peterson
Residence Belvedere, California Citizenship US
Post Office Address 296 Beach Road
Belvedere, California 94920-2472

Inventor's signature _____ Date _____
Full name of inventor Thomas K. Rowland
Residence Los Gatos, California Citizenship US
Post Office Address P.O. Box 33157
Los Gatos, California 95031-3157

Inventor's signature _____ Date _____
Full name of inventor Kirk W. Skeba
Residence Fremont, Califonia Citizenship US
Post Office Address 400 Calistoga Circle
Fremont, California 94536-7620

Inventor's signature _____ Date _____
Full name of inventor Russell D. Housley
Residence Herndon, Virginia Citizenship US
Post Office Address 918 Spring Knoll Drive
Herndon, Virginia

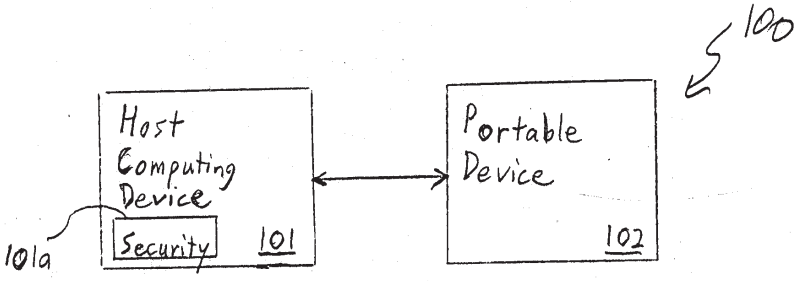

FIG. 1
(Prior Art)

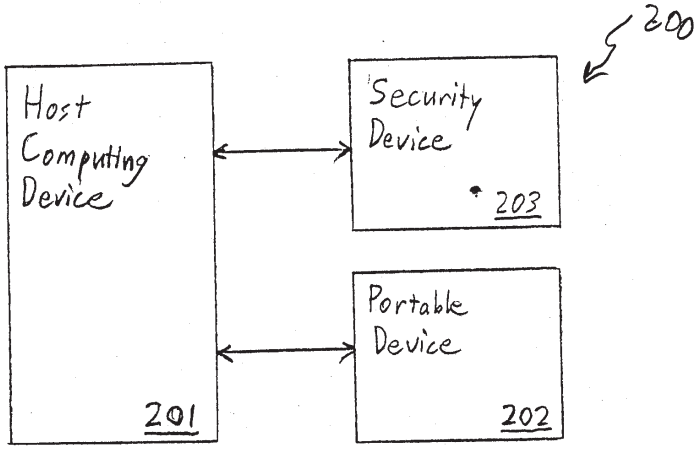

FIG. 2
(Prior Art)

11

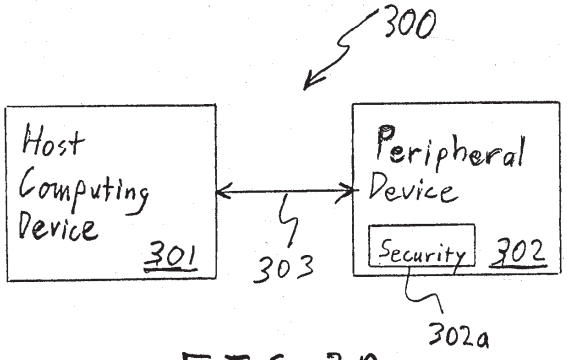
300
Host Computing Device
301
303
Peripheral Device
Security
302
302a

FIG. 3A

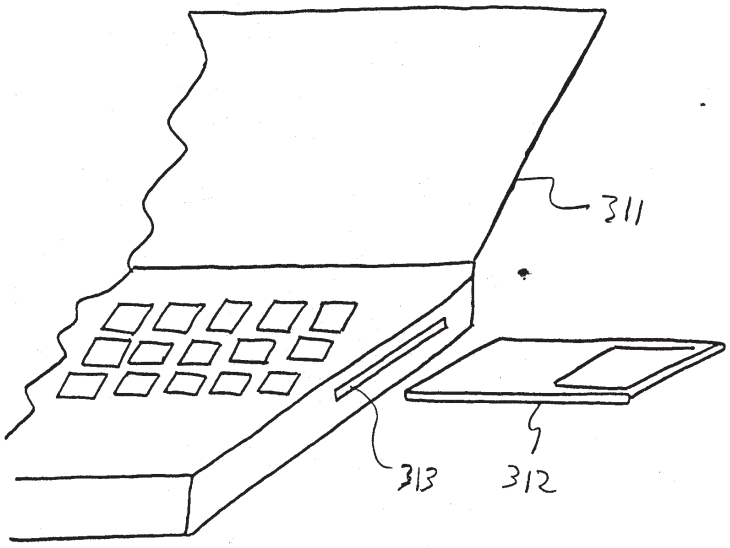
311
313
312

FIG. 3B

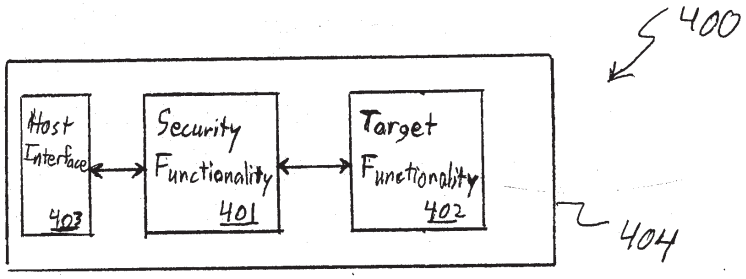
400
Host Interface
403
Security Functionality
401
Target Functionality
402
404

FIG. 4

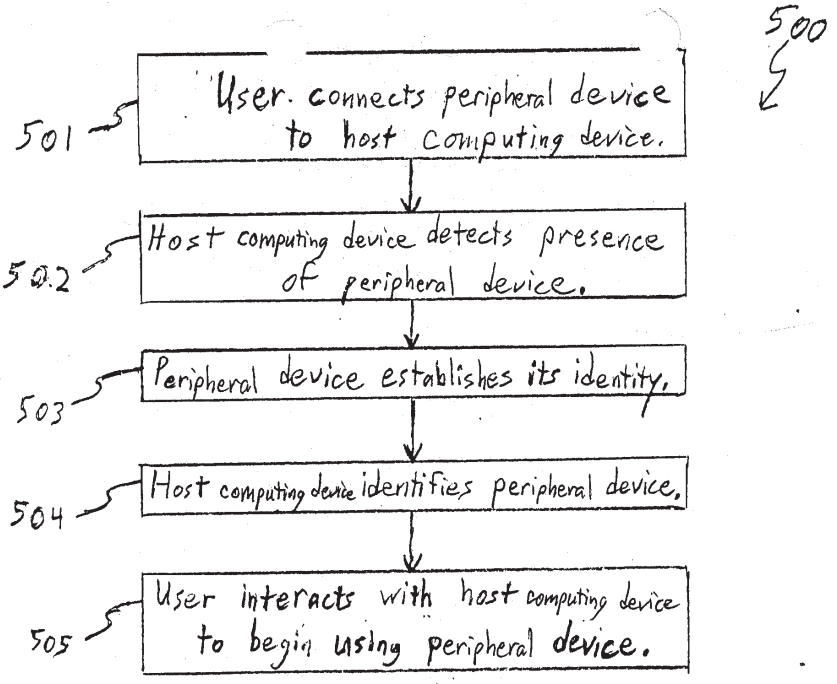
500
User connects peripheral device to host computing device.
501
Host computing device detects presence of peripheral device.
502
Peripheral device establishes its identity.
503
Host computing device identifies peripheral device.
504
User interacts with host computing device to begin using peripheral device.
505

FIG. 5

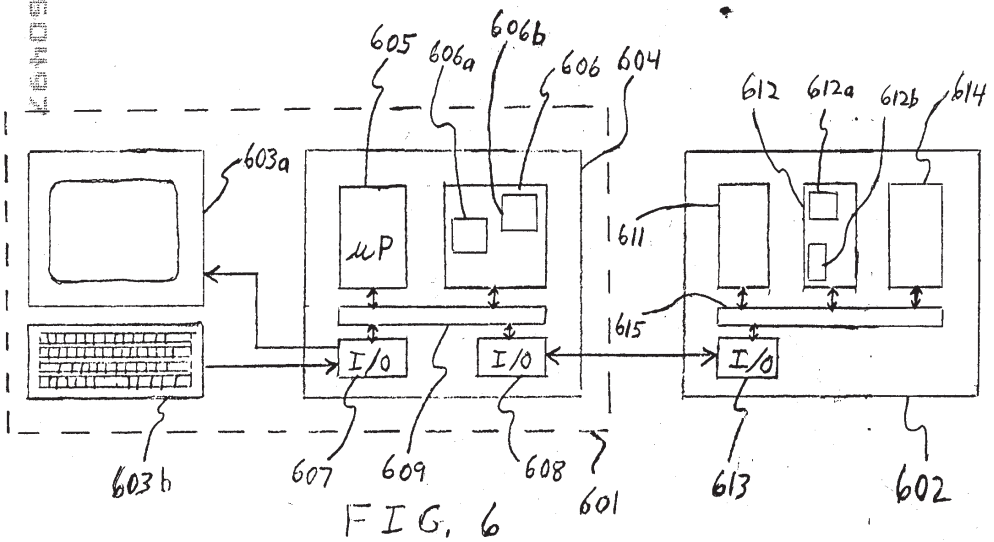
605
606a
606b
606
604
612
612a
612b
614
603a
μP
611
615
I/O
I/O
I/O
603b
607
609
608
601
613
602

FIG. 6

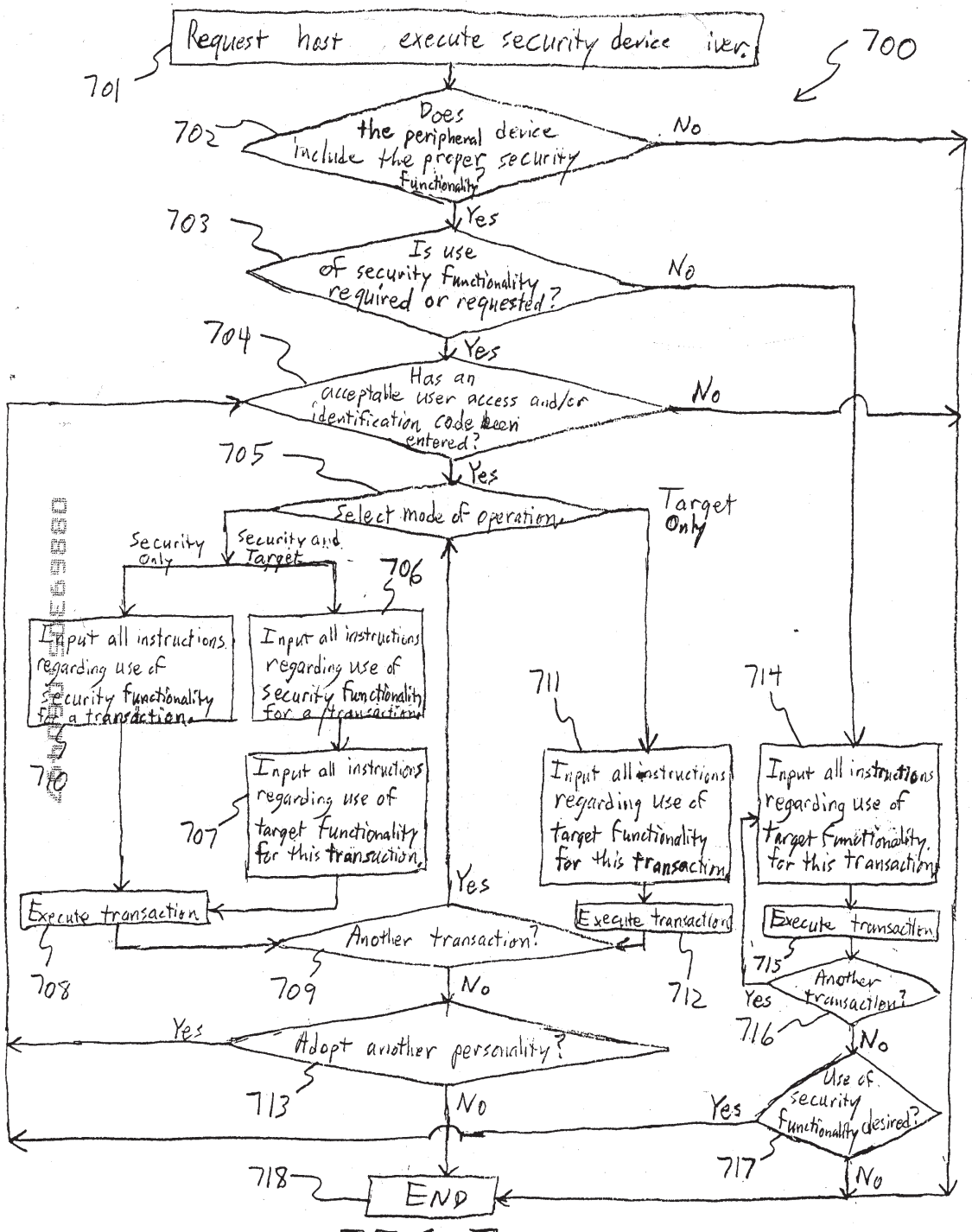
Request host execute security device iver.
701
700
Does the peripheral device include the proper security functionality?
702
No
Yes
Is use of security functionality required or requested?
703
No
Yes
Has an acceptable user access and/or identification code been entered?
704
No
Yes
Select mode of operation.
705
Security Only
Security and Target
Target Only
Input all instructions regarding use of security functionality for a transaction.
Input all instructions regarding use of security functionality for a transaction.
706
710
Input all instructions regarding use of target functionality for this transaction.
707
Input all instructions regarding use of target functionality for this transaction.
711
Input all instructions regarding use of target functionality for this transaction.
714
Execute transaction
Execute transaction
Execute transaction
708
Another transaction?
709
Yes
No
712
715
Another transaction?
Yes
716
No
Yes
Adopt another personality?
713
No
Use of security functionality desired?
Yes
717
No
718
END

FIG. 7

26h090'S0E69880

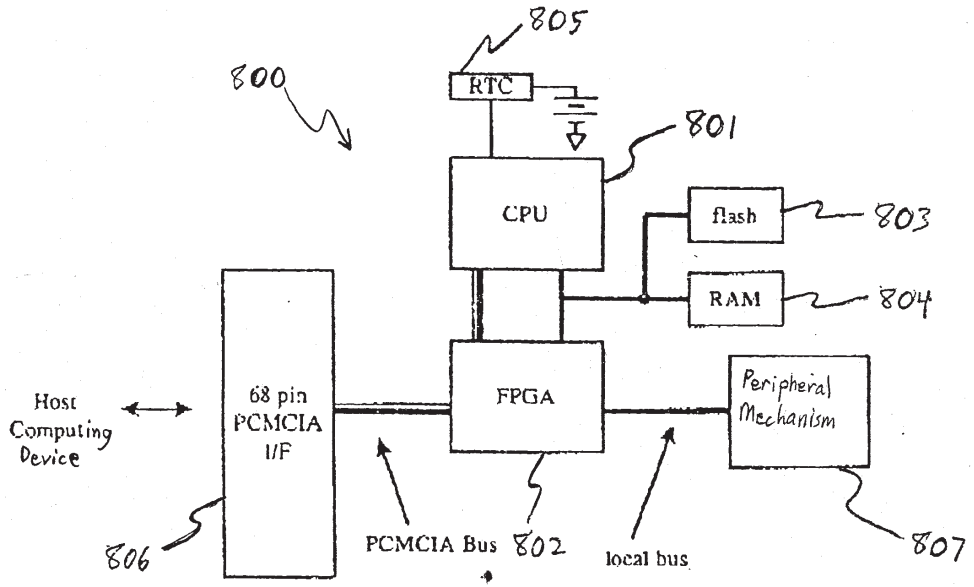

FIG. 8

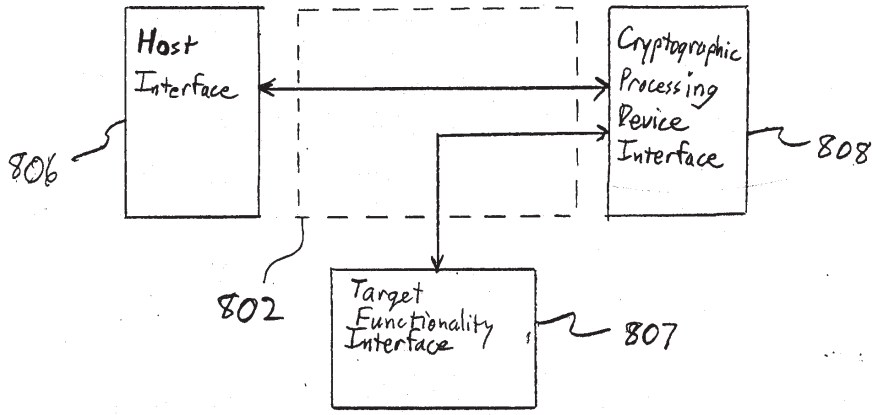
Host Interface
806
Cryptographic Processing Device Interface
808
802
Target Functionality Interface
807

FIG. 9A

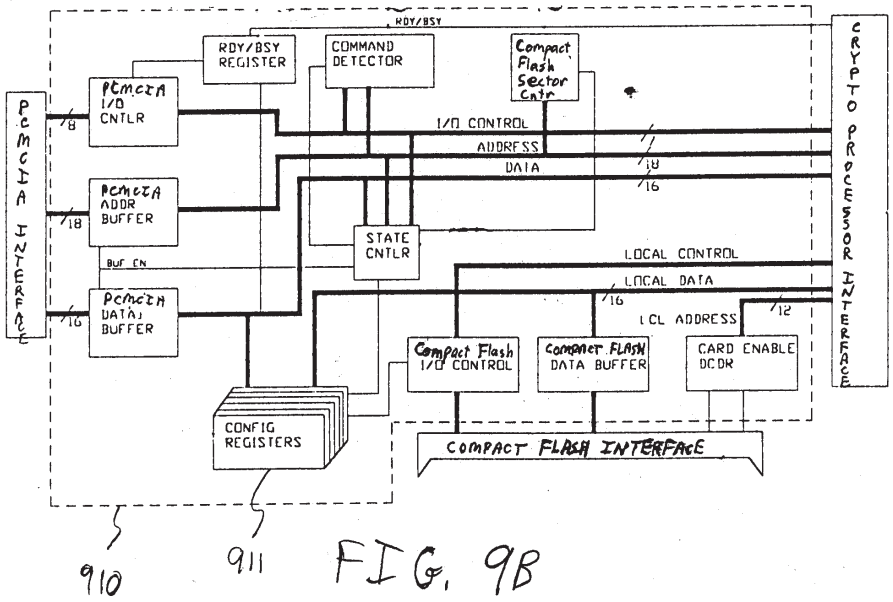
RDY/BSY
RDY/BSY REGISTER
COMMAND DETECTOR
Compact Flash Sector Cntr
PCMCIA I/O CNTLR
PCMCIA ADDR BUFFER
PCMCIA DATA BUFFER
PCMCIA INTERFACE
I/O CONTROL
ADDRESS
DATA
STATE CNTLR
BUF EN
LOCAL CONTROL
LOCAL DATA
LCL ADDRESS
Compact Flash I/O CONTROL
Compact FLASH DATA BUFFER
CARD ENABLE DCDR
CONFIG REGISTERS
COMPACT FLASH INTERFACE
CRYPTO PROCESSOR INTERFACE
910
911

FIG. 9B

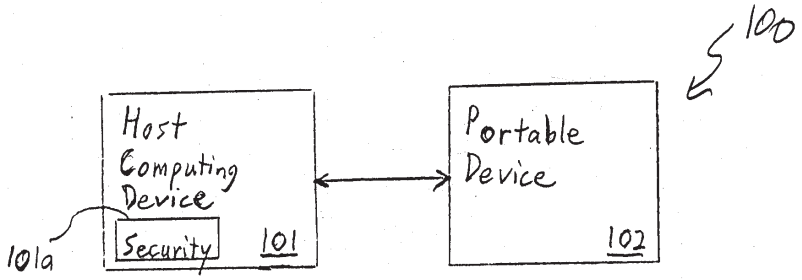

FIG. 1
(Prior Art)

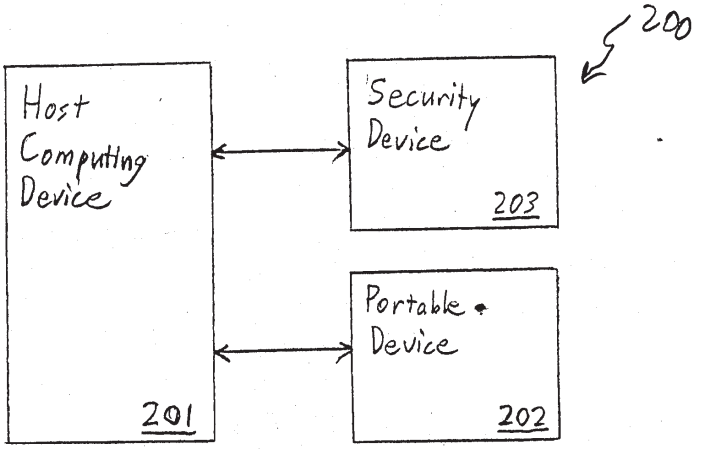

FIG. 2
(Prior Art)

11

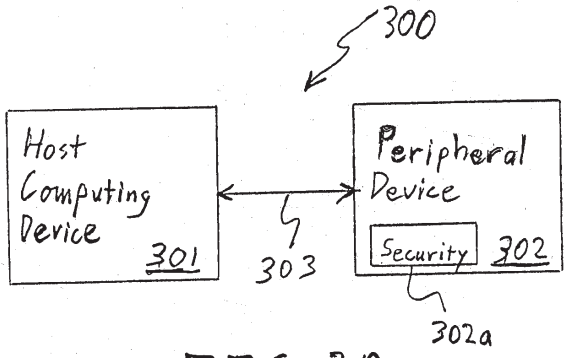
300
Host Computing Device
301
303
Peripheral Device
Security
302
302a

FIG. 3A

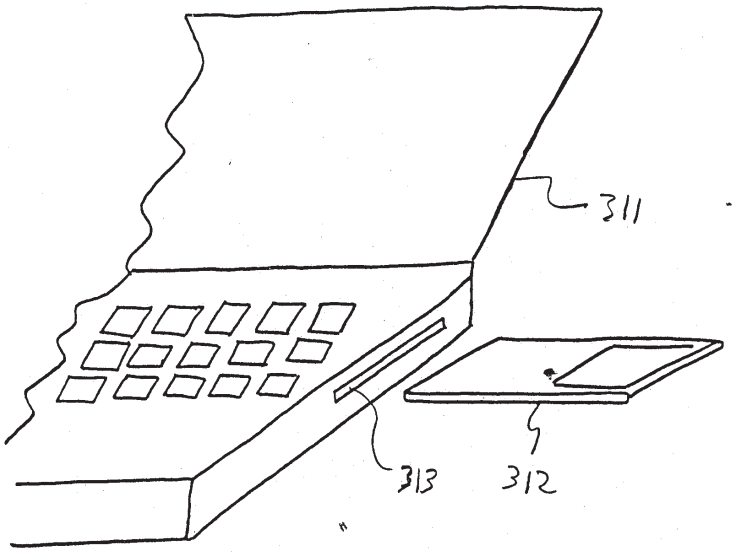
311
313
312

FIG. 3B

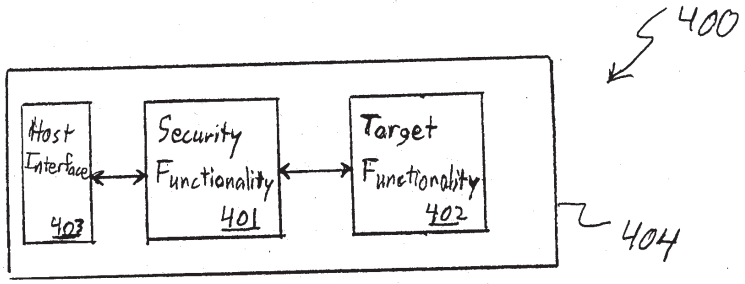
400
Host Interface
403
Security Functionality
401
Target Functionality
402
404

FIG. 4

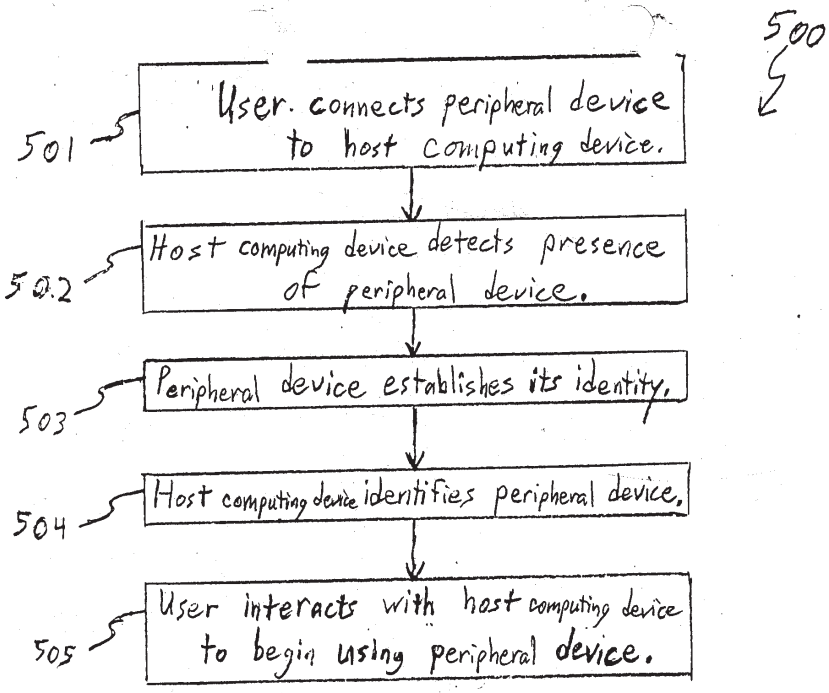
500
User connects peripheral device to host computing device.
501
Host computing device detects presence of peripheral device.
502
Peripheral device establishes its identity.
503
Host computing device identifies peripheral device.
504
User interacts with host computing device to begin using peripheral device.
505

FIG. 5

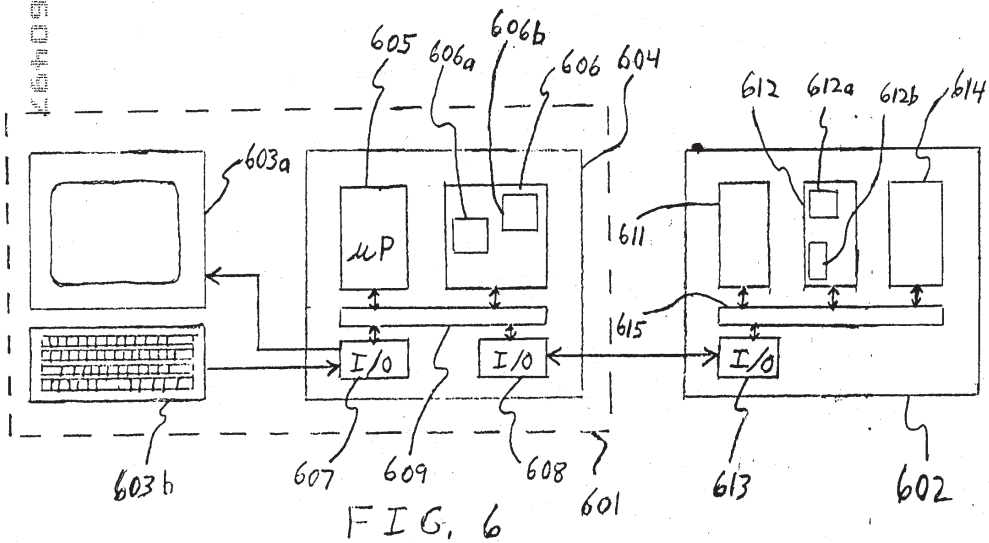
605
606a
606b
606
604
612
612a
612b
614
603a
μP
611
615
I/O
I/O
I/O
603b
607
609
608
601
613
602

FIG. 6

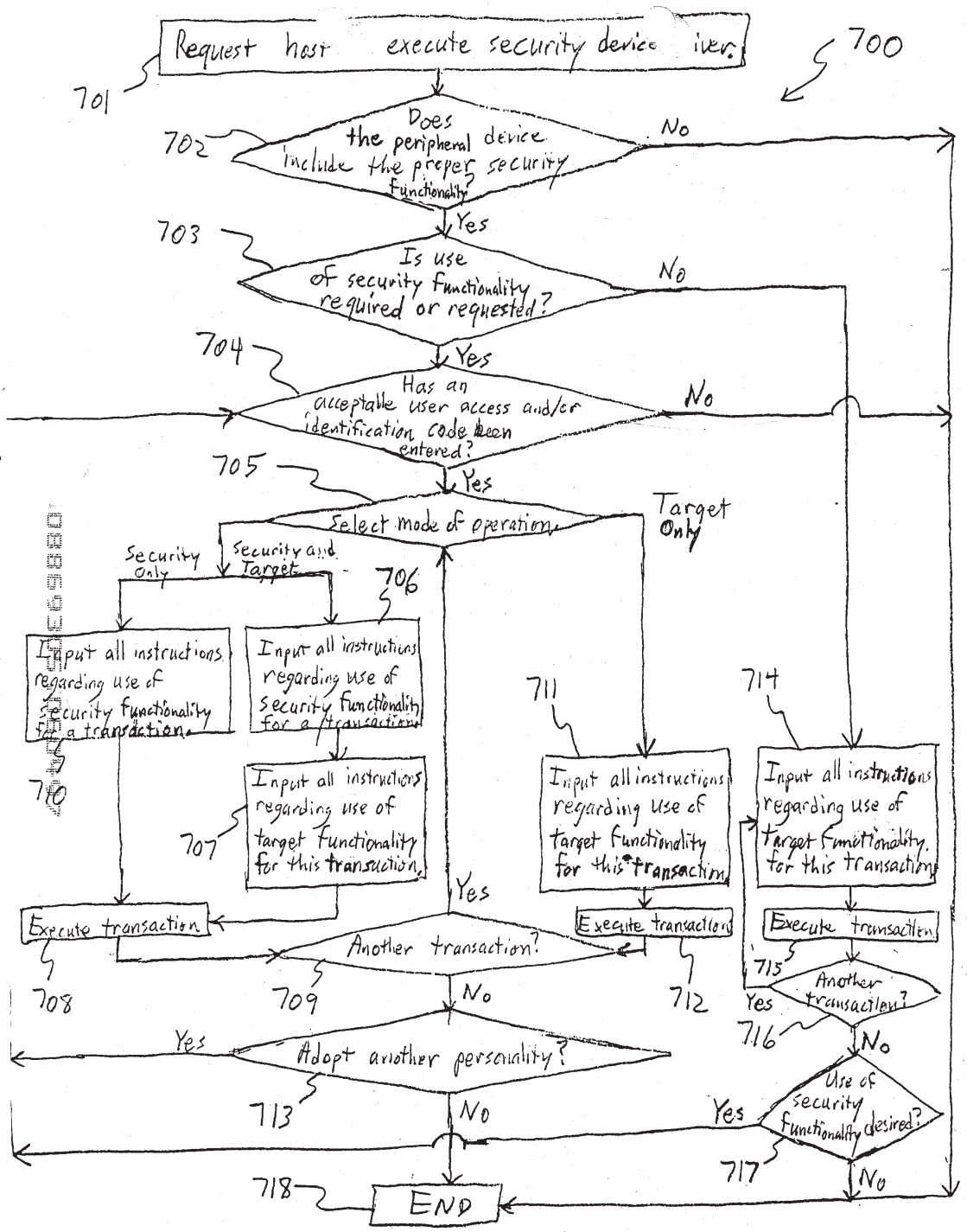
Request host execute security device iver.
700
701
Does the peripheral device include the proper security Functionality?
No
702
Yes
Is use of security functionality required or requested?
703
No
Yes
Has an acceptable user access and/or identification code been entered?
704
No
Yes
Select mode of operation
705
Target Only
Security Only
Security and Target
706
Input all instructions regarding use of security functionality for a transaction.
710
Input all instructions regarding use of security functionality for a transaction.
Input all instructions regarding use of target functionality for this transaction.
707
711
Input all instructions regarding use of target functionality for this transaction.
714
Input all instructions regarding use of target functionality for this transaction.
Execute transaction
708
Another transaction?
709
Yes
No
Execute transaction
712
Execute transaction
715
Another transaction?
Yes
716
No
Adopt another personality?
713
Yes
No
Use of security functionality desired?
Yes
717
No
718
END

FIG. 7

26h090'50E69880

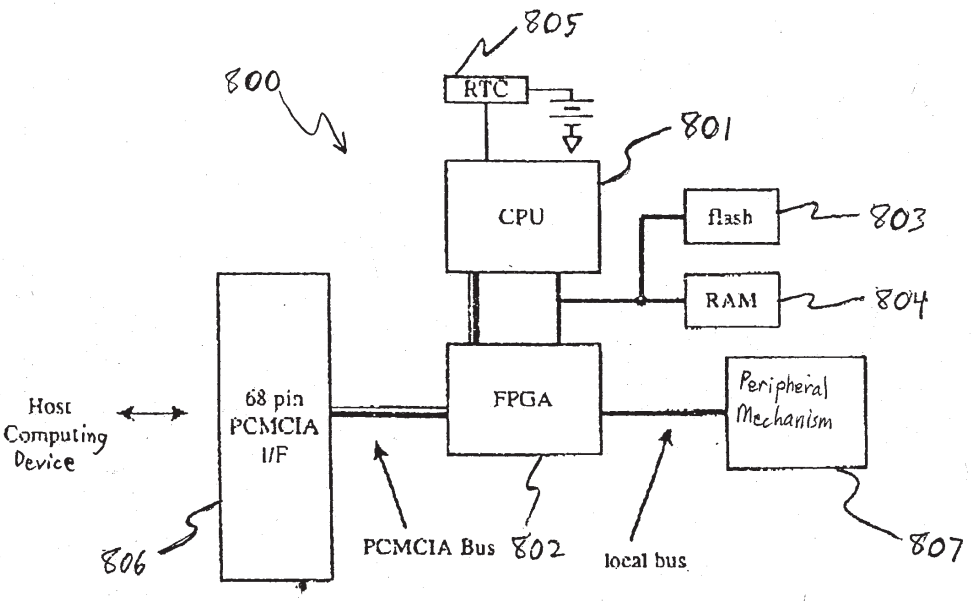

FIG. 8

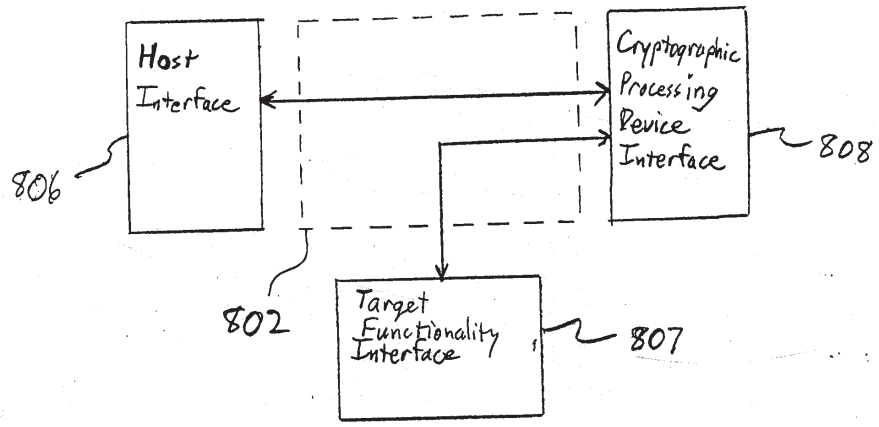
Host Interface
806
Cryptographic Processing Device Interface
808
802
Target Functionality Interface
807

FIG. 9A

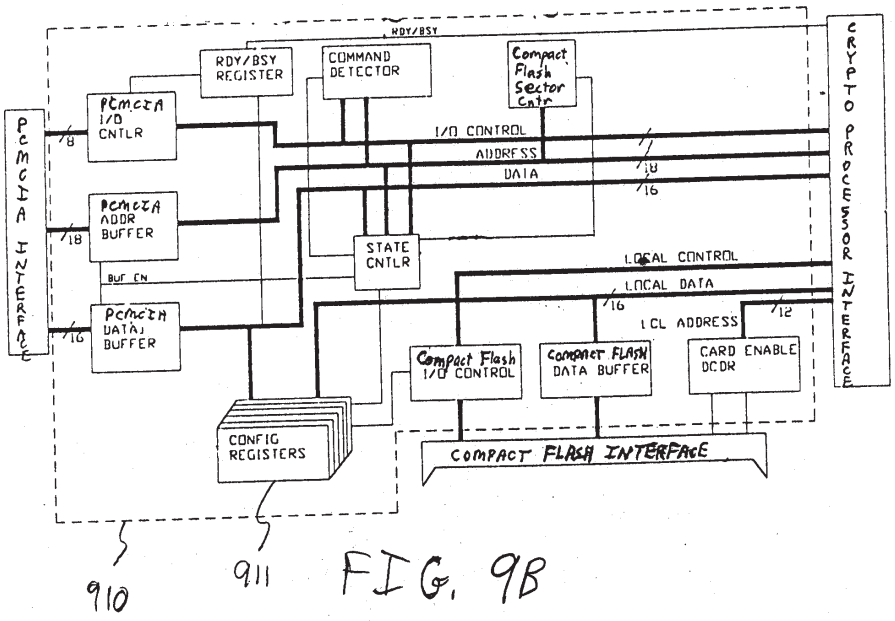
RDY/BSY
RDY/BSY REGISTER
COMMAND DETECTOR
Compact Flash Sector Cntr
PCMCIA I/O CNTLR
PCMCIA ADDR BUFFER
PCMCIA DATA BUFFER
PCMCIA INTERFACE
I/O CONTROL
ADDRESS
DATA
STATE CNTLR
BUF EN
LOCAL CONTROL
LOCAL DATA
LCL ADDRESS
Compact Flash I/O CONTROL
Compact FLASH DATA BUFFER
CARD ENABLE DCDR
CONFIG REGISTERS
COMPACT FLASH INTERFACE
CRYPTO PROCESSOR INTERFACE
910
911

FIG. 9B

PRINT OF DRA NGS
AS ORIGINA FILED

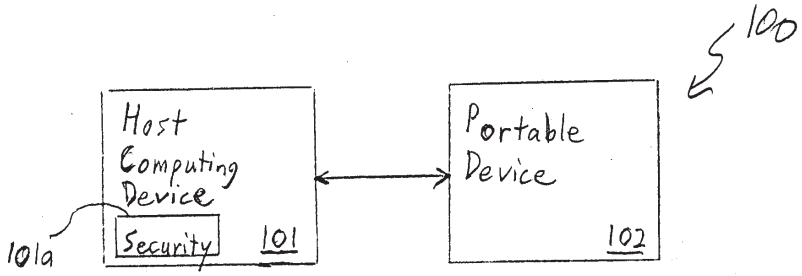

FIG. 1
(Prior Art)

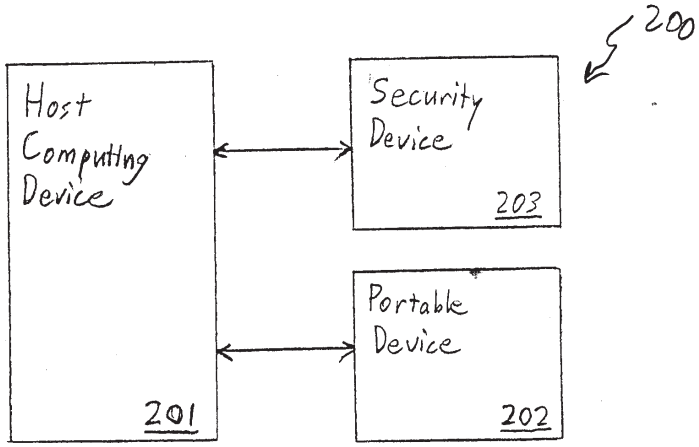

FIG. 2
(Prior Art)

11

PRINT OF DRA NGS
AS ORIGINA FILED

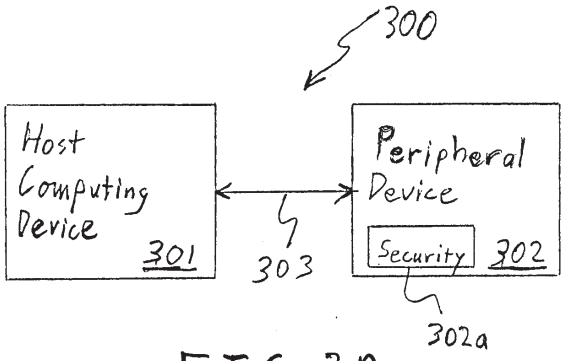

FIG. 3A

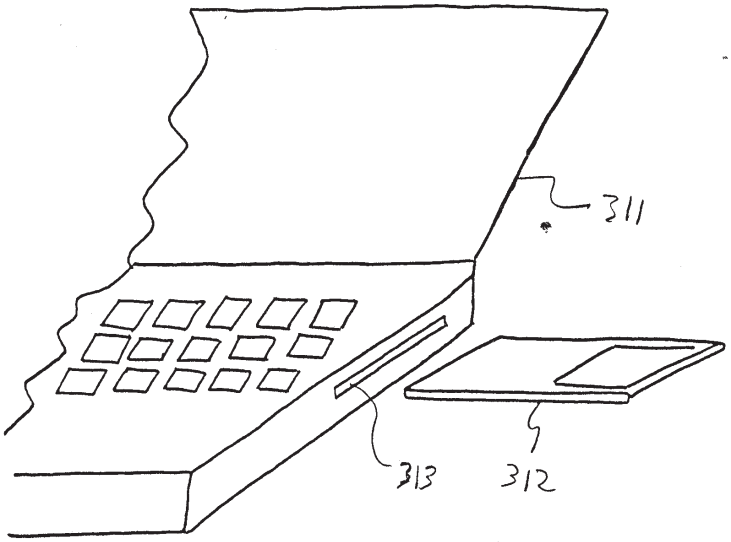

FIG. 3B

PRINT OF DRA NGS
AS ORIGINA FILED

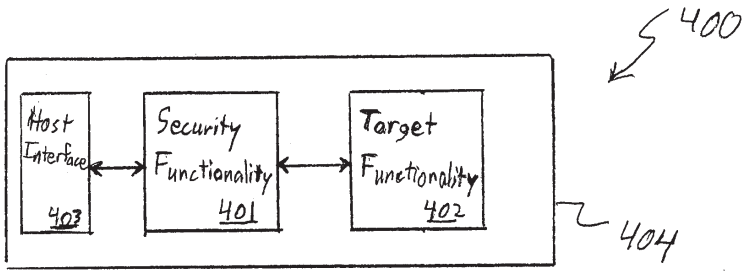

FIG. 4

PRINT OF DRAWINGS
AS ORIGINALLY FILED

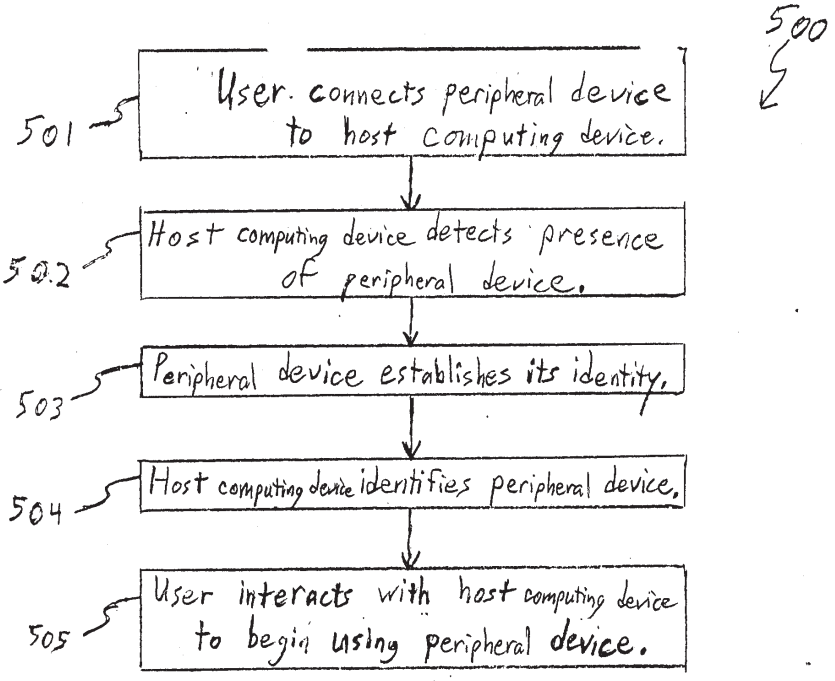

FIG. 5

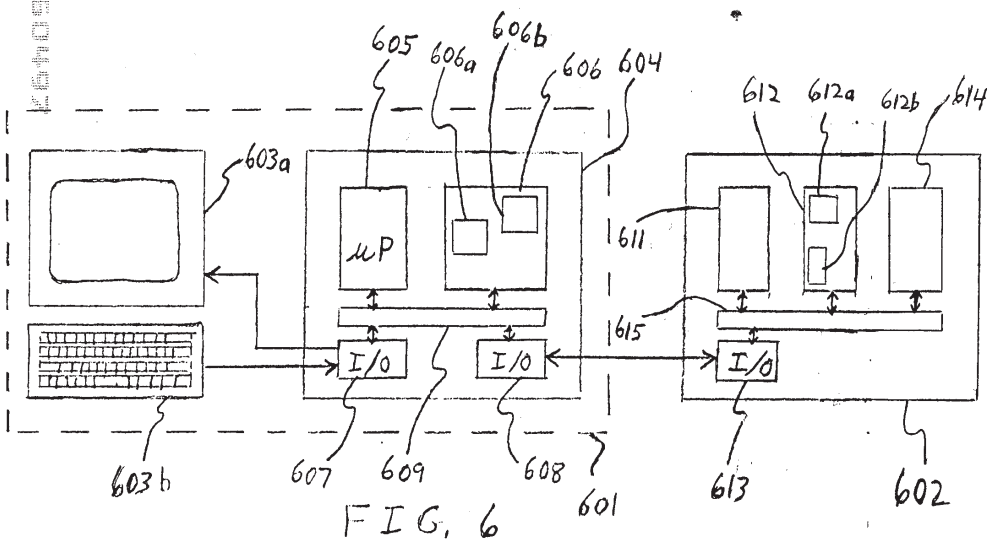

FIG. 6

PRINT OF DRA NGS
AS ORIGINA FILED

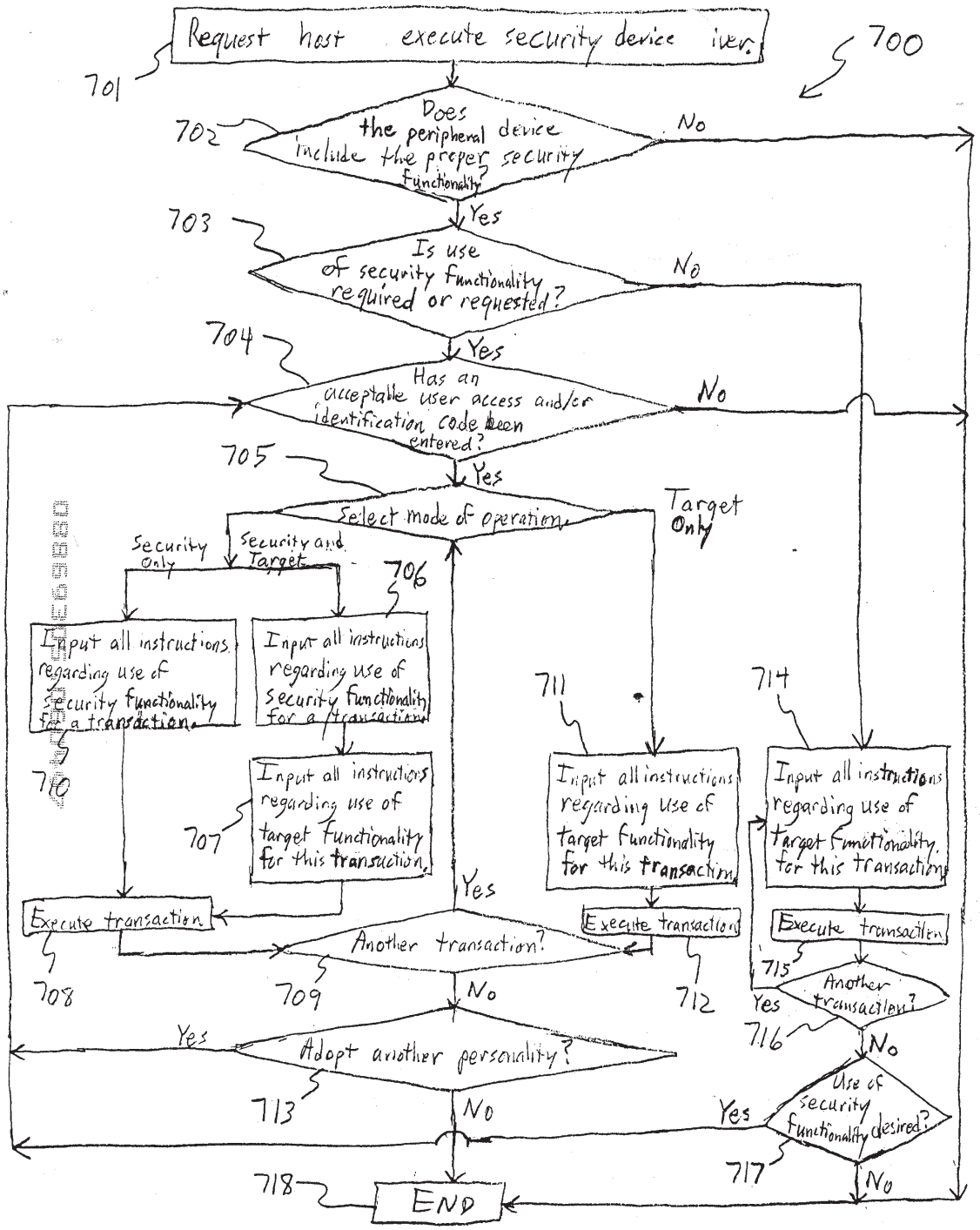

FIG. 7

PRINT OF DRA NGS
AS ORIGINA FILED

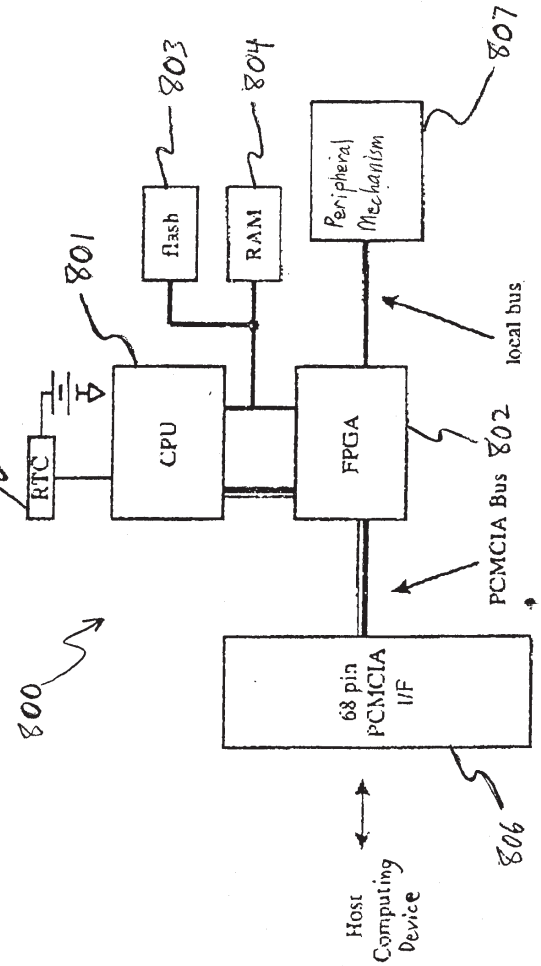

FIG. 8

PRINT OF DRA NGS
AS ORIGINA FILED

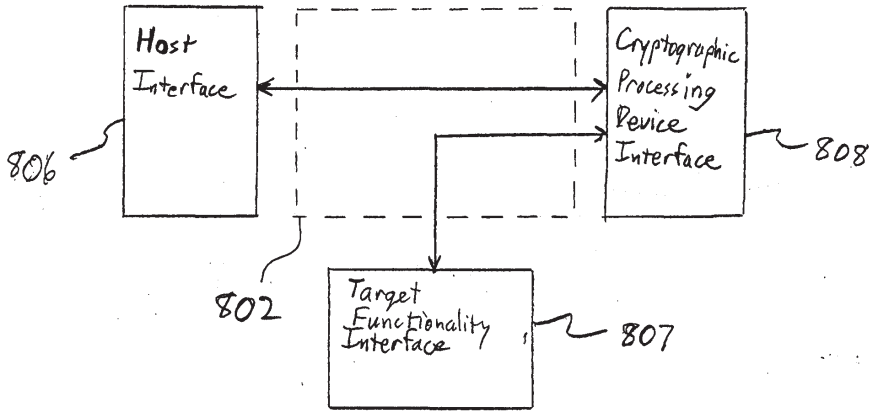

FIG. 9A

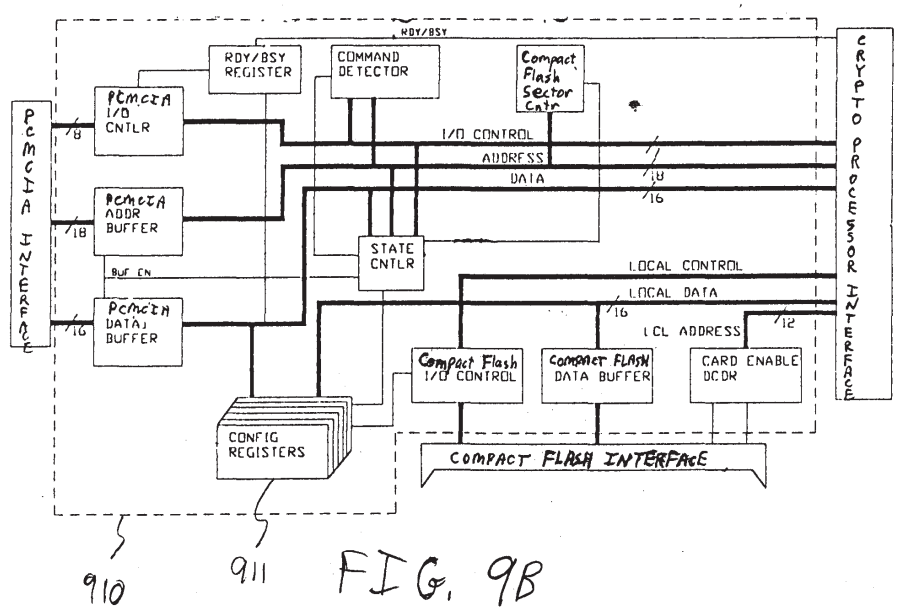

FIG. 9B

UNITED STATES DEPARTMENT OF COMMERCE
Patent and Trademark Office
Address: COMMISSIONER OF PATENTS AND TRADEMARKS
Washington, D.C. 20231

APPLICATION NUMBER	FILING/RECEIPT DATE	FIRST NAMED APPLICANT	ATTORNEY DOCKET NO./TITLE
08/869,305	06/04/97	BIALICK	W SPY-004

0292/1104

DAVID R GRAHAM
1337 CHEWPON AVENUE
MILPITAS CA 95035

NOT ASSIGNED

2202

DATE MAILED: 11/04/97

NOTICE TO FILE MISSING PARTS OF APPLICATION
Filing Date Granted

An Application Number and Filing Date have been assigned to this application. However, the items indicated below are missing. The required items and fees identified below must be timely submitted ALONG WITH THE PAYMENT OF A SURCHARGE for items 1 and 3-6 only of $ 130 for a ☐ large entity ☐ small entity in compliance with 37 CFR 1.27. The surcharge is set forth in 37 CFR 1.16(e). Applicant is given TWO MONTHS FROM THE DATE OF THIS NOTICE within which to file all required items and pay any fees required above to avoid abandonment. Extensions of time may be obtained by filing a petition accompanied by the extension fee under the provisions of 37 CFR 1.136(a).

If all required items on this form are filed within the period set above, the total amount owed by applicant as a ☒ ***large entity*** ☐ ***small entity (verified statement filed), is $*** 1912.

☐ 1. The statutory basic filing fee is:
- ☒ missing.
- ☐ insufficient.

Applicant must submit $ 190 *to complete the basic filing fee and/or file a verified small entity statement claiming such status (37 CFR 1.27).*

☒ 2. Additional claim fees of $ 1002, including any multiple dependent claim fees, are required.
Applicant must either submit the additional claim fees or cancel additional claims for which fees are due.

☐ 3. The oath or declaration:
- ☐ is missing.
- ☐ does not cover the newly submitted items.
- ☐ does not identify the application to which it applies.
- ☐ does not include the city and state or foreign country of applicant's residence.

An oath or declaration in compliance with 37 CFR 1. 63, including residence information and identifying the application by the above Application Number and Filing Date is required.

☒ 4. The signature(s) to the oath or declaration is/are:
- ☒ missing.
- ☐ by a person other than inventor or person qualified under 37 CFR 1.42, 1.43, or 1.47.

A properly signed oath or declaration in compliance with 37 CFR 1.63, identifying the application by the above Application Number and Filing Date, is required.

☐ 5. The signature of the following joint inventor(s) is missing from the oath or declaration:

_____

An oath or declaration listing the names of all inventors and signed by the omitted inventor(s), identifying this application by the above Application Number and Filing Date, is required.

☐ 6. A $_____ processing fee is required since your check was returned without payment (37 CFR 1.21(m)):

☐ 7. Your filing receipt was mailed in error because your check was returned without payment.

☐ 8. The application does not comply with the Sequence Rules.
See attached "Notice to Comply with Sequence Rules 37 CFR 1.821-1.825."

☐ 9. OTHER:

Direct the response and any questions about this notice to "Attention: Box Missing Parts."

A copy of this notice MUST be returned with the response.

Customer Service Center
Initial Patent Examination Division (703) 308-1202

FORM **PTO-1533** (REV.7-96) **PART 3 - OFFICE COPY** *U.S. GPO: 1998-404-496/40515

IN THE UNITED STATES PATENT AND TRADEMARK OFFICE

Applicants: William P. Bialick et al.

Assignee: Spyrus, Inc.

Title: Peripheral Device With Integrated Security Functionality

Serial No.: 08/869,305 Filed: June 4, 1997

Examiner: Unknown Group Art Unit: 2202

Attorney Docket No.: SPY-004

Milpitas, California
January 5, 1998

Box Missing Parts
Assistant Commissioner for Patents
Washington, D. C. 20231

RESPONSE TO NOTICE TO FILE MISSING PARTS OF APPLICATION - FILING DATE GRANTED

Sir:

In response to the "Notice to File Missing Parts of Application - Filing Date Granted" mailed by the United States Patent and Trademark Office on November 4, 1997, the following documents are enclosed to complete the filing of the above-referenced patent application:

1. Declaration and Power of Attorney for Patent Application, signed in counterpart by the inventors in compliance with 37 CFR 1.63;
2. Copy of Notice to File Missing Parts of Application - Filing Date Granted; and
3. Verified Statement Under 37 CFR 1.9(f) and 1.27(c) Claiming Small Entity Status by Assignee.

Enclosed is a check (Check No. 1155) in the amount of $961.00 for:

1. Statutory basic filing fee - $395.00;
2. Additional claim fees - $501.00; and
3. Surcharge for filing declaration on a date later than the filing date of the application - $65.00.

It is hereby submitted that the enclosed documents complete the filing of the above-referenced patent application and justify the filing date of June 4, 1997. This document is being submitted in duplicate. If there are any questions regarding this Response, please telephone Applicants' undersigned attorney at (408) 945-9912.

I hereby certify that this correspondence is being deposited with the United States Postal Service as first class mail in an envelope addressed to: Assistant Commissioner for Patents, Washington, D.C. 20231, on January 5, 1998.

1-5-98 David R. Graham
Date Signature

Respectfully submitted,

David R. Graham

David R. Graham
Reg. No. 36,150
Attorney for Applicants

135jc U.S. PTO
01/12/98

Sector #

IN THE UNITED STATES PATENT AND TRADEMARK OFFICE

Applicants: William P. Bialick et al.

Assignee: Spyrus, Inc.

Title: Peripheral Device With Integrated Security Functionality

3

Serial No.: 08/869,305 Filed: June 4, 1997

Examiner: Unknown Group Art Unit: 2202

Attorney Docket No.: SPY-004

Milpitas, California
January 5, 1998

Box Missing Parts
Assistant Commissioner for Patents
Washington, D. C. 20231

RESPONSE TO NOTICE TO FILE MISSING PARTS OF APPLICATION - FILING DATE GRANTED

Sir:

In response to the "Notice to File Missing Parts of Application - Filing Date Granted" mailed by the United States Patent and Trademark Office on November 4, 1997, the following documents are enclosed to complete the filing of the above-referenced patent application:

1. Declaration and Power of Attorney for Patent Application, signed in counterpart by the inventors in compliance with 37 CFR 1.63;
2. Copy of Notice to File Missing Parts of Application - Filing Date Granted; and
3. Verified Statement Under 37 CFR 1.9(f) and 1.27(c) Claiming Small Entity Status by Assignee.

Enclosed is a check (Check No. 1155) in the amount of $961.00 for:

1. Statutory basic filing fee - $395.00;
2. Additional claim fees - $501.00; and
3. Surcharge for filing declaration on a date later than the filing date of the application - $65.00.

It is hereby submitted that the enclosed documents complete the filing of the above-referenced patent application and justify the filing date of June 4, 1997. This document is being submitted in duplicate. If there are any questions regarding this Response, please telephone Applicants' undersigned attorney at (408) 945-9912.

I hereby certify that this correspondence is being deposited with the United States Postal Service as first class mail in an envelope addressed to: Assistant Commissioner for Patents, Washington, D.C. 20231, on January 5, 1998.

1-5-98 David R. Graham
Date Signature

Respectfully submitted,

David R. Graham

David R. Graham
Reg. No. 36,150
Attorney for Applicants

135jc U.S. PTO
01/12/98

DECLARATION AND POWER OF ATTORNEY FOR PATENT APPLICATION

#3

As a below named inventor, I hereby declare that:

My residence, post office address and citizenship are as stated below adjacent to my name.

I believe I am the original, first and sole inventor (if only one name is listed below) or an original, first and joint inventor (if plural names are listed below) of subject matter (process, machine, manufacture, or composition of matter, or an improvement thereof) which is claimed and for which a patent is sought by way of the application entitled: Peripheral Device With Integrated Security Functionality

which (check)
- [ ] is attached hereto.
- [ ] and is amended by the Preliminary Amendment attached hereto.
- [X] was filed on June 4, 1997, as Application Serial No. 08/869,305.
- [ ] and was amended on _____ (if applicable).

I hereby state that I have reviewed and understood the contents of the above-identified application, including the claims, as amended by any amendment referred to above.

I acknowledge the duty to disclose to the United States Patent and Trademark Office information known to me to be material to the examination of this application in accordance with Title 37, Code of Federal Regulations, § 1.56(a).

I hereby claim the priority benefit under Title 35, United States Code, § 119 of any foreign application(s) for patent or inventor's certificate listed below and have also identified below any foreign application for patent or inventor's certificate for the same invention having a filing date before that of the application on which priority is claimed:

Prior Foreign Application(s)			Priority Claimed	
N/A			Yes	No
(Number)	(Country)	(Date Filed)		
			Yes	No
(Number)	(Country)	(Date Filed)		

I hereby claim the priority benefit under Title 35, United States Code, §§ 119 and 365(a) of any international patent application(s), listed below, that do not designate the United States, but do designate at least one country other than the United States, and have also identified below any such international application for the same invention having a filing date before that of the application on which priority is claimed:

Prior International Application(s)		Priority Claimed	
N/A		Yes	No
(Number)	(Date Filed)		
		Yes	No
(Number)	(Date Filed)		

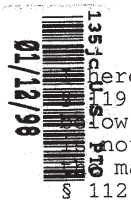

I hereby claim the priority benefit under Title 35, United States Code, §119(e) of the United States provisional patent application(s) listed below and, insofar as any subject matter of the claims of this application is not disclosed in such prior United States provisional application(s) in the manner provided by the first paragraph of Title 35, United States Code, § 112, I acknowledge the duty to disclose material information as defined in Title 37, Code of Federal Regulations, § 1.56(a) which became available between the filing date of the prior provisional application(s) and the national or PCT international filing date of this application:

(Appl. Ser. No.)	(Date Filed)	(Status-patented, pending, abandoned)
N/A		

I hereby claim the priority benefit under Title 35, United States Code, § 120 of the United States patent application(s) listed below and, insofar as any subject matter of the claims of this application is not disclosed in such prior United States application(s) in the manner provided by the first paragraph of Title 35, United States Code, § 112, I acknowledge the duty to disclose material information as defined in Title 37, Code of Federal Regulations, § 1.56(a) which became available between the filing date of the prior application(s) and the national or PCT international filing date of this application:

(Appl. Ser. No.)	(Date Filed)	(Status-patented, pending, abandoned)
N/A		

I hereby claim the priority benefit under Title 35, United States Code, §§ 120 and 365(c) of any international patent application(s), listed below, that designate the United States and have also identified below any such international application for the same invention having a filing date before that of the application(s) on which priority is claimed, and, insofar as any subject matter of the claims of this application is not disclosed in such prior international application(s) in the manner provided by the first paragraph of Title 35, United States Code, § 112, I acknowledge the duty to disclose material information as defined in Title 37, Code of Federal Regulations, § 1.56(a) which became available between the filing date of the prior international application(s) and the national or PCT international filing date of this application:

Prior International Application(s)		Priority Claimed	
N/A		Yes	No
(Number)	(Date Filed)		
		Yes	No
(Number)	(Date Filed)		

I hereby appoint the following attorney, with full power of substitution, to prosecute this application and to transact all business in the United States Patent and Trademark Office connected therewith: David R. Graham, Reg. No. 36,150.

Please address all correspondence regarding this application to David R. Graham, 1337 Chewpon Avenue, Milpitas, California 95035.

Please direct all telephone calls regarding this application to David R. Graham at telephone number (408) 945-9912.

I hereby declare that all statements made herein of my own knowledge are true and that all statements made herein on information and belief are believed to be true; and further that these statements were made with the knowledge that willful false statements and the like so made are punishable by fine or imprisonment, or both, under Title 18, United States Code, § 1001 and that such willful false statements may jeopardize the validity of the application or any patent issued thereon.

Inventor's signature _____ Date _____
Full name of inventor William P. Bialick
Residence Clarksville, Maryland Citizenship US
Post Office Address 7150 Moorland Drive
Clarksville, Maryland 21029-1735

Inventor's signature 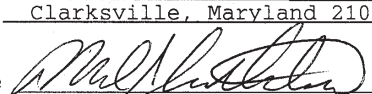 Date 18 Dec 97
Full name of inventor Mark J. Sutherland
Residence Milpitas, California Citizenship US
Post Office Address 1209 Eagle Ridge Way
Milpitas, Califonia 95035-7817

Inventor's signature _____ Date _____
Full name of inventor Janet L. Dolphin-Peterson
Residence Belvedere, California Citizenship US
Post Office Address 296 Beach Road
Belvedere, California 94920-2472

Inventor's signature 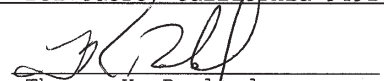 Date 12-18-97
Full name of inventor Thomas K. Rowland
Residence Los Gatos, California Citizenship US
Post Office Address P.O. Box 33157
Los Gatos, California 95031-3157

Inventor's signature _____ Date _____
Full name of inventor Kirk W. Skeba
Residence Fremont, Califonia Citizenship US
Post Office Address 400 Calistoga Circle
Fremont, California 94536-7620

Inventor's signature 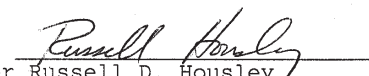 Date 20 Aug 1997
Full name of inventor Russell D. Housley
Residence Herndon, Virginia Citizenship US
Post Office Address 918 Spring Knoll Drive
Herndon, Virginia

01/12/98

I hereby appoint the following attorney, with full power of substitution, to prosecute this application and to transact all business in the United States Patent and Trademark Office connected therewith: David R. Graham, Reg. No. 36,150.

Please address all correspondence regarding this application to David R. Graham, 1337 Chewpon Avenue, Milpitas, California 95035.

Please direct all telephone calls regarding this application to David R. Graham at telephone number (408) 945-9912.

I hereby declare that all statements made herein of my own knowledge are true and that all statements made herein on information and belief are believed to be true; and further that these statements were made with the knowledge that willful false statements and the like so made are punishable by fine or imprisonment, or both, under Title 18, United States Code, § 1001 and that such willful false statements may jeopardize the validity of the application or any patent issued thereon.

Inventor's signature William P. Bialick Date 12/19/97
Full name of inventor William P. Bialick
Residence Clarksville, Maryland Citizenship US
Post Office Address 7150 Moorland Drive
Clarksville, Maryland 21029-1735

Inventor's signature Mark J. Sutherland Date 18 Dec 97
Full name of inventor Mark J. Sutherland
Residence Milpitas, California Citizenship US
Post Office Address 1209 Eagle Ridge Way
Milpitas, Califonia 95035-7817

Inventor's signature _____ Date _____
Full name of inventor Janet L. Dolphin-Peterson
Residence Belvedere, California Citizenship US
Post Office Address 296 Beach Road
Belvedere, California 94920-2472

Inventor's signature [signature] Date 12-18-97
Full name of inventor Thomas K. Rowland
Residence Los Gatos, California Citizenship US
Post Office Address P.O. Box 33157
Los Gatos, California 95031-3157

Inventor's signature Kirk W. Skeba Date 12/23/97
Full name of inventor Kirk W. Skeba
Residence Fremont, Califonia Citizenship US
Post Office Address 400 Calistoga Circle
Fremont, California 94536-7620

Inventor's signature Russell Housley Date 20 Aug 1997
Full name of inventor Russell D. Housley
Residence Herndon, Virginia Citizenship US
Post Office Address 918 Spring Knoll Drive
Herndon, Virginia

01/12/98 135FC U.S.PTO

I hereby appoint the following attorney, with full power of substitution, to prosecute this application and to transact all business in the United States Patent and Trademark Office connected therewith: David R. Graham, Reg. No. 36,150.

Please address all correspondence regarding this application to David R. Graham, 1337 Chewpon Avenue, Milpitas, California 95035.

Please direct all telephone calls regarding this application to David R. Graham at telephone number (408) 945-9912.

I hereby declare that all statements made herein of my own knowledge are true and that all statements made herein on information and belief are believed to be true; and further that these statements were made with the knowledge that willful false statements and the like so made are punishable by fine or imprisonment, or both, under Title 18, United States Code, § 1001 and that such willful false statements may jeopardize the validity of the application or any patent issued thereon.

Inventor's signature _____ Date _____
Full name of inventor William P. Bialick
Residence Clarksville, Maryland Citizenship US
Post Office Address 7150 Moorland Drive
Clarksville, Maryland 21029-1735

Inventor's signature [signature] Date 18 Dec 97
Full name of inventor Mark J. Sutherland
Residence Milpitas, California Citizenship US
Post Office Address 1209 Eagle Ridge Way
Milpitas, Califonia 95035-7817

Inventor's signature [signature] Date 20-DEC-97
Full name of inventor Janet L. Dolphin-Peterson
Residence Belvedere, California Citizenship US
Post Office Address 296 Beach Road
Belvedere, California 94920-2472

Inventor's signature [signature] Date 12-18-97
Full name of inventor Thomas K. Rowland
Residence Los Gatos, California Citizenship US
Post Office Address P.O. Box 33157
Los Gatos, California 95031-3157

Inventor's signature _____ Date _____
Full name of inventor Kirk W. Skeba
Residence Fremont, Califonia Citizenship US
Post Office Address 400 Calistoga Circle
Fremont, California 94536-7620

Inventor's signature [signature] Date 20 Aug 1997
Full name of inventor Russell D. Housley
Residence Herndon, Virginia Citizenship US
Post Office Address 918 Spring Knoll Drive
Herndon, Virginia

IN THE UNITED STATES PATENT AND TRADEMARK OFFICE

Applicants: William P. Bialick et al.

Assignee: Spyrus, Inc.

Title: Peripheral Device With Integrated Security Functionality

Serial No.: 08/869,305 Filed: June 4, 1997

Examiner: Unknown Group Art Unit: Unknown

Attorney Docket No.: SPY-004

San Jose, California

Assistant Commissioner for Patents
Washington, D. C. 20231

VERIFIED STATEMENT UNDER 37 CFR 1.9(f) AND 1.27(c)
CLAIMING SMALL ENTITY STATUS BY ASSIGNEE

Sir:

I declare that I am an official empowered to act on behalf of the concern identified above as assignee.

Exclusive rights to the above invention as described in U.S. patent application Serial No. 08/869,305, filed June 4, 1995 have been conveyed to and remain with the above concern.

For purposes of paying reduced fees under Section 41 of Title 35 of the United States Code with regard to this invention, I declare that the above concern qualifies as a small business concern as defined in 13 CFR 121.12 and reproduced in 37 CFR 1.9(d), namely, the concern's number of employees, including those of its affiliates, does not exceed 500 persons and the concern has not assigned, granted, conveyed, or licensed, and is under no obligation under contract or law to assign, grant, convey or license, any rights in the invention to any person who could not be classified as an independent inventor under 37 CFR 1.9(c) if that person made the invention, or to any concern which would not qualify as a small business concern under 37 CFR 1.9(d) or a nonprofit organization under 37 CFR 1.9(e).

I acknowledge my duty to file, in this application or patent, notification of any change in status resulting in loss of entitlement to small entity status prior to paying, or at the time of paying, the earliest of the issue fee or any maintenance fee due after the date on which status as a small entity is no longer appropriate per 37 CFR 1.28(b).

I further declare that all statements made herein of my own knowledge are true, that all statements made on information and belief are believed to be true, that these statements are made with the knowledge that willful false statements and the like so made are punishable by fine or imprisonment, or both, under Section 1001 of Title 18 of the United States Code, and that such willful false statements may jeopardize the validity of this application, or any patent issued thereon.

Signature: Kevin O'Neill Date: November 25, 1997
Official's Name: Kevin O'Neill, Esq.
Official's Title: Corporate Secretary
Concern's Name: Spyrus, Inc.
Concern's Address: 2460 North First Street, Suite 100
San Jose, CA 95131

01/12/98 135JC U.S. PTO

UNITED STATES DEPARTMENT OF COMMERCE
Patent and Trademark Office
Address: COMMISSIONER OF PATENTS AND TRADEMARKS
Washington, D.C. 20231

#3

APPLICATION NUMBER	FILING/RECEIPT DATE	FIRST NAMED APPLICANT	ATTORNEY DOCKET NO./TITLE
08/869,305	06/04/97	BIALICK	SFY-004

0292/1104

DAVID R GRAHAM
1337 CHEWPON AVENUE
MILPITAS CA 95035

NOT ASSIGNED

ORA 2202

DATE MAILED: 11/04/97

NOTICE TO FILE MISSING PARTS OF APPLICATION
Filing Date Granted

An Application Number and Filing Date have been assigned to this application. However, the items indicated below are missing. The required items and fees identified below must be timely submitted ALONG WITH THE PAYMENT OF A SURCHARGE for items 1 and 3-6 only of $ 130 for a ☐ large entity ☐ small entity in compliance with 37 CFR 1.27. The surcharge is set forth in 37 CFR 1.16(e). Applicant is given TWO MONTHS FROM THE DATE OF THIS NOTICE within which to file all required items and pay any fees required above to avoid abandonment. Extensions of time may be obtained by filing a petition accompanied by the extension fee under the provisions of 37 CFR 1.136(a).

If all required items on this form are filed within the period set above, the total amount owed by applicant as a ☒ ***large entity*** ☐ ***small entity (verified statement filed), is $*** 1922.

☐ 1. The statutory basic filing fee is:
- ☒ missing.
- ☒ insufficient.

Applicant must submit $ 190.00 *to complete the basic filing fee and/or file a verified small entity statement claiming such status (37 CFR 1.27).*

☒ 2. Additional claim fees of $ 1002, including any multiple dependent claim fees, are required.
Applicant must either submit the additional claim fees or cancel additional claims for which fees are due.

☐ 3. The oath or declaration:
- ☐ is missing.
- ☐ does not cover the newly submitted items.
- ☐ does not identify the application to which it applies.
- ☐ does not include the city and state or foreign country of applicant's residence.

An oath or declaration in compliance with 37 CFR 1. 63, including residence information and identifying the application by the above Application Number and Filing Date is required.

☒ 4. The signature(s) to the oath or declaration is/are:
- ☒ missing.
- ☐ by a person other than inventor or person qualified under 37 CFR 1.42, 1.43, or 1.47.

A properly signed oath or declaration in compliance with 37 CFR 1.63, identifying the application by the above Application Number and Filing Date, is required.

☐ 5. The signature of the following joint inventor(s) is missing from the oath or declaration:

_____

An oath or declaration listing the names of all inventors and signed by the omitted inventor(s), identifying this application by the above Application Number and Filing Date, is required.

☐ 6. A $_____ processing fee is required since your check was returned without payment (37 CFR 1.21(m)).

☐ 7. Your filing receipt was mailed in error because your check was returned without payment.

☐ 8. The application does not comply with the Sequence Rules.
See attached "Notice to Comply with Sequence Rules 37 CFR 1.821-1.825."

☐ 9. OTHER:

Direct the response and any questions about this notice to "Attention: Box Missing Parts."

A copy of this notice MUST be returned with the response.

Customer Service Center
Initial Patent Examination Division (703) 308-1202

FORM PTO-1533 (REV 7-96) **PART 2 - COPY TO BE RETURNED WITH RESPONSE** *U.S. GPO: 1996-404-496/40515

01/13/1998 KDUNCAN 00000020 08869305 395.00 OP
01 FC:199 501.00 OP FC:205 65.00 OP

OIPE JC42
OCT - 8 1998
PATENT & TRADEMARK OFFICE

GP2202

IN THE UNITED STATES PATENT AND TRADEMARK OFFICE

#4
11·23·98

Applicants: William P. Bialick et al.

Assignee: Spyrus, Inc.

Title: Peripheral Device With Integrated Security Functionality

Serial No.: 08/869,305 Filed: June 4, 1997

Examiner: Unknown Group Art Unit: 2202

Attorney Docket No.: SPY-004

RECEIVED
OCT 13 1998
GROUP 2100

Milpitas, California
October 6, 1998

Assistant Commissioner for Patents
Washington, D.C. 20231

INFORMATION DISCLOSURE STATEMENT
WITH CERTIFICATION UNDER 37 C.F.R. §1.97(e)(1)

Sir:

Pursuant to 37 C.F.R. § 1.56, § 1.97 and § 1.98, Applicants bring the documents (copies enclosed) listed on the enclosed Form PTO-1449 to the Examiner's attention in the above-identified application. These documents were cited by the European Patent Office in the International Search Report (copy enclosed) for the corresponding PCT Application No. PCT/US98/11052.

Citation of these documents shall not be construed as an admission that the documents are necessarily prior art with respect to the instant invention. Also, citation of these documents shall not be construed as an admission that the information disclosed therein is, or is considered to be, material to patentability as defined in 37 C.F.R. § 1.56(b).

The undersigned hereby certifies in accordance with 37 C.F.R. §1.97(e)(1) that each item of information

RECEIVED
98 OCT 15 AM 8:52
GROUP 2700

contained in this information disclosure statement was cited in a communication from a foreign patent office in a counterpart foreign application not more than three months prior to the filing of this information disclosure statement.

I hereby certify that this correspondence is being deposited with the United States Postal Service as first class mail in an envelope addressed to: Assistant Commissioner for Patents, Washington, D.C. 20231, on October 6, 1998.

10-6-98 David R. Graham
Date Signature

Respectfully submitted
and certified by,

David R. Graham

David R. Graham
Reg. No. 36,150
Attorney for Applicants

This file wrapper was thoroughly reviewed by our technical staff. The PCT Search Report is missing from this file.

This has been brought to your attention so that you will know it has not been overlooked.

part of #4

SHEET 1 OF 1

U.S. DEPT OF COMMERCE - PATENT AND TRADEMARK OFFICE INFORMATION DISCLOSURE CITATION (Use several sheets if necessary)	ATTORNEY DOCKET NO.: SPY-004	SERIAL NO.: 08/869,305
	APPLICANTS: William P. Bialick et al.	
	FILING DATE: June 4, 1997	GROUP ART UNIT: 2202

OIPE JC42 OCT - 8 1998 PATENT & TRADEMARK OFFICE

U.S. PATENTS

EXAMINER'S INITIALS	PATENT NUMBER	ISSUE DATE	INVENTOR(S)	CLASS	SUB-CLASS	FILING DATE
LVH	5,548,721	8/20/96	Denslow	395	187.01	4/28/94
LVH	5,457,590	10/10/95	Barrett et al.	360	133	6/11/91
LVH	5,630,174	5/13/97	Stone, III et al.	395	883	2/3/95
LVH	4,910,776	3/20/90	Dyke	380	25	2/24/89

RECEIVED
OCT 13 1998
GROUP 2100

FOREIGN PATENT DOCUMENTS

EXAMINER'S INITIALS	DOCUMENT NUMBER	PUBLICATION DATE	NAME(S)	COUNTRY	TRANSLATION? YES	TRANSLATION? NO
LVH	WO 97/29416	8/14/97	Mooney et al.	PCT	X	
LVH	WO 82/03286	9/30/82	Lofberg	PCT	X	

COMMONLY OWNED, CO-PENDING U.S. PATENT APPLICATIONS

EXAMINER'S INITIALS	SERIAL NUMBER	ATTORNEY DOCKET NO.	APPLICANT(S)	CLASS	SUB-CLASS	FILING DATE

OTHER DOCUMENTS

EXAMINER'S INITIALS	AUTHOR(S), TITLE, DATE, PERTINENT PAGES, ETC.

RECEIVED
98 OCT 15 AM 8:52
GROUP 2100

EXAMINER: Ly V. Hua	DATE CONSIDERED: 11/23/98

Examiner: Initial if citation considered, whether or not citation is in conformance with MPEP §609. Draw line through citation if not in conformance and not considered. Include copy of this form with next communication to the applicant.

Form PTO-1449

~~02CO~~ 03CO

MAIL ROOM AUG 15 1997 PAT. & TRADEMARK OFF.

IN THE UNITED STATES PATENT AND TRADEMARK OFFICE

#5

Applicants: William P. Bialick et al.

Assignee: Spyrus, Inc.

Title: Peripheral Device With Integrated Security Functionality

Serial No.: 08/869,305 Filed: June 4, 1997

Examiner: Unknown Group Art Unit: Unknown

Attorney Docket No.: SPY-004

Milpitas, California
August 11, 1997

Assistant Commissioner for Patents
Washington, D. C. 20231

INFORMATION DISCLOSURE STATEMENT

Sir:

Pursuant to 37 C.F.R. § 1.56, § 1.97 and § 1.98, Applicants bring the documents (copy of the U.S. Patent enclosed) listed on the enclosed Form PTO-1449 to the Examiner's attention in the above-identified application. Citation of these documents shall not be construed as an admission that the documents are necessarily prior art with respect to the instant invention. Also, citation of these documents shall not be construed as an admission that the information disclosed therein is, or is considered to be, material to patentability as defined in 37 C.F.R. § 1.56(b).

I hereby certify that this correspondence is being deposited with the United States Postal Service as first class mail in an envelope addressed to: Assistant Commissioner for Patents, Washington, D.C. 20231, on August 11, 1997.

8-11-97 David R. Graham
Date Signature

Respectfully submitted,

David R. Graham

David R. Graham
Reg. No. 36,150
Attorney for Applicants

part of #5

SHEET 1 OF 1

U.S. DEPT OF COMMERCE - PATENT AND TRADEMARK OFFICE INFORMATION DISCLOSURE CITATION (Use several sheets if necessary)	ATTORNEY DOCKET NO.: SPY-004	SERIAL NO.: 08/869,305
	APPLICANTS: William P. Bialick et al.	
	FILING DATE: June 4, 1997	GROUP ART UNIT: Unknown

MAIL ROOM AUG 15 1997 PATENT AND TRADEMARK OFFICE

U.S. PATENTS

EXAMINER'S INITIALS	PATENT NUMBER	ISSUE DATE	INVENTOR(S)	CLASS	SUB-CLASS	FILING DATE
LVH	5,544,649	8/13/96	Caputo et al.	380	26	7/12/94

FOREIGN PATENT DOCUMENTS

EXAMINER'S INITIALS	DOCUMENT NUMBER	PUBLICATION DATE	NAME(S)	COUNTRY	TRANSLATION? YES	TRANSLATION? NO

COMMONLY OWNED, CO-PENDING U.S. PATENT APPLICATIONS

EXAMINER'S INITIALS	SERIAL NUMBER	ATTORNEY DOCKET NO.	APPLICANT(S)	CLASS	SUB-CLASS	FILING DATE
LVH	08/869,120	SPY-003	William P. Bialick et al.	—	—	6/4/97

OTHER DOCUMENTS

EXAMINER'S INITIALS	AUTHOR(S), TITLE, DATE, PERTINENT PAGES, ETC.

EXAMINER: Ly V. Hua	DATE CONSIDERED: 11/23/98

Examiner: Initial if citation considered, whether or not citation is in conformance with MPEP §609. Draw line through citation if not in conformance and not considered. Include copy of this form with next communication to the applicant.

Form PTO-1449

UNITED STATES DEPARTMENT OF COMMERCE
Patent and Trademark Office
Address: COMMISSIONER OF PATENTS AND TRADEMARKS
Washington, D.C. 20231

APPLICATION NO.	FILING DATE	FIRST NAMED INVENTOR		ATTORNEY DOCKET NO.
08/869,305	06/04/97	BIALICK	W	SPY-004

LM41/1211

DAVID R GRAHAM
1337 CHEWPON AVENUE
MILPITAS CA 95035

EXAMINER	
HUA,L	
ART UNIT	**PAPER NUMBER**
2785	6

DATE MAILED: 12/11/98

Please find below and/or attached an Office communication concerning this application or proceeding.

Commissioner of Patents and Trademarks

PTO-90C (Rev. 2/95)
*U.S. GPO: 1998-437-638/80022

1- File Copy

08/869,305

Office Action Summary	Application No.	Applicant(s)	
	Examiner	Group Art Unit	

---The MAILING DATE of this communication appears on the cover sheet beneath the correspondence address---

Period for Response

A SHORTENED STATUTORY PERIOD FOR RESPONSE IS SET TO EXPIRE three MONTH(S) FROM THE MAILING DATE OF THIS COMMUNICATION.

- Extensions of time may be available under the provisions of 37 CFR 1.136(a). In no event, however, may a response be timely filed after SIX (6) MONTHS from the mailing date of this communication.
- If the period for response specified above is less than thirty (30) days, a response within the statutory minimum of thirty (30) days will be considered timely.
- If NO period for response is specified above, such period shall, by default, expire SIX (6) MONTHS from the mailing date of this communication .
- Failure to respond within the set or extended period for response will, by statute, cause the application to become ABANDONED (35 U.S.C. § 133).

Status

☑ Responsive to communication(s) filed on October 8, 1998.

☐ This action is **FINAL.**

☐ Since this application is in condition for allowance except for formal matters, **prosecution as to the merits is closed** in accordance with the practice under *Ex parte Quayle*, 1935 C.D. 1 1; 453 O.G. 213.

Disposition of Claims

☑ Claim(s) 1 - 32 is/are pending in the application.

Of the above claim(s) _____ is/are withdrawn from consideration.

☐ Claim(s) _____ is/are allowed.

☐ Claim(s) 4, 8, 14, 4, 11, 17, 32, 31, 28, 29, 30 and 24-26 is/are rejected.

☐ Claim(s) 6, 7 and 13 is/are objected to.

☑ Claim(s) 2, 3, 5, 20, 9, 10, 12, 15, 16, 18, 19, 21-23 and 27 are subject to restriction or election requirement.

Application Papers

☐ See the attached Notice of Draftsperson's Patent Drawing Review, PTO-948.

☐ The proposed drawing correction, filed on _____ is ☐ approved ☐ disapproved.

☐ The drawing(s) filed on _____ is/are objected to by the Examiner.

☐ The specification is objected to by the Examiner.

☐ The oath or declaration is objected to by the Examiner.

Priority under 35 U.S.C. § 119 (a)-(d)

☐ Acknowledgment is made of a claim for foreign priority under 35 U.S.C. § 11 9(a)-(d).

☐ All ☐ Some* ☐ None of the CERTIFIED copies of the priority documents have been

☐ received.

☐ received in Application No. (Series Code/Serial Number) _____.

☐ received in this national stage application from the International Bureau (PCT Rule 1 7.2(a)).

*Certified copies not received: _____.

Attachment(s)

☑ Information Disclosure Statement(s), PTO-1449, Paper No(s). 5 and 4 ☐ Interview Summary, PTO-413

☑ Notice of References Cited, PTO-892 ☐ Notice of Informal Patent Application, PTO-152

☐ Notice of Draftsperson's Patent Drawing Review, PTO-948 ☐ Other _____

Office Action Summary

U. S. Patent and Trademark Office
PTO-326 (Rev. 3-97) *U.S. GPO: 1997-417-381/62710 Part of Paper No. 5

1. This application contains claims directed to the following patentably distinct species of the claimed invention: first, second, third, fourth species of target means.

Applicant is required under 35 U.S.C. 121 to elect a single disclosed species for prosecution on the merits to which the claims shall be restricted if no generic claim is finally held to be allowable. Currently, the target means is generic.

Applicant is advised that a response to this requirement must include an identification of the species that is elected consonant with this requirement, and a listing of all claims readable thereon, including any claims subsequently added. An argument that a claim is allowable or that all claims are generic is considered nonresponsive unless accompanied by an election.

Upon the allowance of a generic claim, applicant will be entitled to consideration of claims to additional species which are written in dependent form or otherwise include all the limitations of an allowed generic claim as provided by 37 CFR 1.141. If claims are added after the election, applicant must indicate which are readable upon the elected species. MPEP § 809.02(a).

Should applicant traverse on the ground that the species are not patentably distinct, applicant should submit evidence or identify such evidence now of record showing the species to be obvious variants or clearly admit on the record that this is the case. In either instance, if the examiner finds one of the inventions unpatentable over the prior art, the evidence or admission may be used in a rejection under 35 U.S.C. 103(a) of the other invention.

2. During a telephone conversation with Mr. Vavid R. Graham (Reg. No. 36160) on November 6, 1998, a provisional election was made with traverse to prosecute the invention of the first species, claims 1, 4, 6, 7, 8, 11, 13, 14, 17, 24-26, 28, 29, 30, 31 and 32. Affirmation of this election must be made by applicant in responding to this Office action. Claims 2, 3, 5, 20, 9, 10, 12, 15, 16, 18, 19-20, 21-

23 and 27 are withdrawn from further consideration by the examiner, 37 CFR 1.142(b), as being drawn to a non-elected invention.

3. Applicant is reminded that upon the cancellation of claims to a non-elected invention, the inventorship must be amended in compliance with 37 CFR 1.48(b) if one or more of the currently named inventors is no longer an inventor of at least one claim remaining in the application. Any amendment of inventorship must be accompanied by a diligently-filed petition under 37 CFR 1.48(b) and by the fee required under 37 CFR 1.17(h).

4. The following is a quotation of the appropriate paragraphs of 35 U.S.C. 102 that form the basis for the rejections under this section made in this Office action:

> A person shall be entitled to a patent unless --
>
> (e) the invention was described in a patent granted on an application for patent by another filed in the United States before the invention thereof by the applicant for patent, or on an international application by another who has fulfilled the requirements of paragraphs (1), (2), and (4) of section 371(c) of this title before the invention thereof by the applicant for patent.

5. Claims 24-26 are rejected under 35 U.S.C. 102(e) as being anticipated by Novis et al (5,770,849 hereinafter Novis).

a. As per claim 24:

Novis teaches a peripheral device [10], comprising:

(1) security means [86] ~~for enabling one or more security operations to be performed on data~~ ;

(2) a biometric device [14 (col. 3, lines 36-44; col. 9, lines 28-30)] ~~for receiving input data regarding a physical characteristic of a person based upon a physical interaction of the person with the peripheral device~~;

(3) means [16] for enabling communication between

(a) the security means [86] and

(b) the biometric device [14],

[which communication is for transferring captured user characteristic from biometric 14 to the security means 86 for authentication thereat (col. 9, lines 26-37] ; and

(4) means [95] for enabling communication with a host computing device [96].

b. As per claim 25 or 26:

Novis teaches that his biometric device comprises either:

(1) a fingerprint scanning device [in order to input biometric identifier such as a finger print (col. 3, lines 37-40)] or

(2) a retinal scanning device [in order to input biometric identifier such as a retinal scan (col. 3, lines 37-40)].

6. The following is a quotation of 35 U.S.C. 103(a) which forms the basis for all obviousness rejections set forth in this Office action:

> (a) A patent may not be obtained though the invention is not identically disclosed or described as set forth in section 102 of this title, if the differences between the subject matter sought to be patented and the prior art are such that the subject matter as a whole would have been obvious at the time the invention was made to a person having ordinary skill in the art to which said subject matter pertains. Patentability shall not be negatived by the manner in which the invention was made.

7. This application currently names joint inventors. In considering patentability of the claims under 35 U.S.C. 103(a), the examiner presumes that the subject matter of the various claims was commonly owned at the time any inventions covered therein were made absent any evidence to the contrary.

Applicant is advised of the obligation under 37 CFR 1.56 to point out the inventor and invention dates of each claim that was not commonly owned at the time a later invention was made in order for the examiner to consider the applicability of 35 U.S.C. 103(c) and potential 35 U.S.C. 102(f) or (g) prior art under 35 U.S.C. 103(a).

8. Claims 1, 8, and 14 are rejected under 35 U.S.C. 103(a) as being unpatentable over Novis et al (5,770,849 her

a. As per claims 1, 8, and 14:

i. Novis teaches a peripheral device, comprising:

(1) security means [86] for enabling one or more security operations to be performed on data;

(2) target means [14 (col. 3, lines 36-44, col. 9, lines 28-30) for capturing biometric input] for enabling a defined interaction with a host computing device;

(3) means [16] for enabling communication between

(a) the security means and

(b) the target means ,

[which communication is for transferring captured user characteristic from biometric 14 to the security means 86 for authentication thereat (col. 9, lines 26-37];

(4) means [95] for enabling communication with a host computing device [96].

ii. Applican't s admitted prior art teaches:

(1) means [inherent in the host computing device 201 of Fig. 2] for operably connecting

(a) [either] the security means [86] **and/or** the target means [14] to

(b) the host computing device [96]

in response to an instruction from the host computing device.

iii. It would have been obvious to a person of ordinary skill in the art at the time the invention was made to maitain, (even when the security device 203 and the target device 202 of applican't admitted art are implemented in a single unit), the means [inherent in the host computing device 201 of Fig. 2] for operably connecting

(a) [either] the security means [86] **and/or** the target means [14] to

(b) the host computing device [96]

in response to an instruction from the host computing device.

iv. This is because the admitted prior works fine.

b. As per claim 4, 11 or 17:

Novis teaches that his target means 14 comprises a biometric device [col. 3, lines 41-44].

c. As per claims 32 and 31:

These claims do not teach or cover more than those which are covered by claims 1, 8 and 14 and thus are similarly rejected with the same rationale applied thereto.

d. As per laims 28, 29 and 30:

Using the above rejected claims 1, 8 and 14 with a host computer device would have been obvious to a person of ordinary skill in the art. This is because peripheral devices are to be use with host device.

9. Claims 6, 7, and 13 are objected to as they depend on rejected claims.

10. The prior art made of record and not relied upon is considered pertinent to applicant's disclosure.

11. **Any response to this action should be mailed to:**

Commissioner of Patents and Trademarks
Washington, D.C. 20231

or faxed to:

(703) 308-9051, (for formal communications intended for entry)

Or:

(703)305-9724 (for informal or draft communications, please label "PROPOSED" or "DRAFT")

Hand-delivered responses should be brought to Crystal Park II, 2121 Crystal Drive, Arlington. VA., Sixth Floor (Receptionist).

12. Any inquiry concerning this communication or earlier communications from the examiner should be directed to Examiner Ly Hua whose telephone number is (703) 305-9684. The examiner can normally be reached on Monday to Friday from 9:30 AM to 6:00 PM.

If attempts to reach the examiner by telephone are unsuccessful, the examiner's supervisor, Mr. Robert W. Beausoliel, Jr., can be reached on (703) 305-9713. The fax phone number for this Group is (703) 305-9724.

Any inquiry of a general nature or relating to the status of this application or proceeding should be directed to the Group receptionist whose telephone number is (703) 305-3900.

LY V. HUA
PATENT EXAMINER
ART UNIT 2785

L. Hua
November 20, 1998

Notice of References Cited

Application No.	Applicant(s)		
08/869,305	BIALICK ET AL		
Examiner	Group Art Unit	Page	of
Ly Hua	2785	1	1

U.S. PATENT DOCUMENTS

*		DOCUMENT NO.	DATE	NAME	CLASS	SUBCLASS
	A	5,770,849	6/98	NOVIS ET AL.	235	492
	B	5,473,692	12/95	DAVIS	380	25
	C	5,546,463	8/96	CAPUTO ET AL.	380	25
	D	5,282,247	1/94	MCLEAN ET AL.	380	4
	E	5,191,611	3/93	LANG	380	25
	F	5,537,544	7/96	MORISAWA ET AL.	395	188.01
	G	5,742,683	4/98	LEE ET AL.	380	23
	H	5,491,827	2/96	HOLTEY	395	800
	I	5,442,704	8/95	HOLTEY	380	23
	J					
	K					
	L					
	M					

FOREIGN PATENT DOCUMENTS

*		DOCUMENT NO.	DATE	COUNTRY	NAME	CLASS	SUBCLASS
	N						
	O						
	P						
	Q						
	R						
	S						
	T						

NON-PATENT DOCUMENTS

*		DOCUMENT (Including Author, Title, Source, and Pertinent Pages)	DATE
	U		
	V		
	W		
	X		

* A copy of this reference is not being funished with this Office action.
(See Manual of Patent Examining Procedure, Section 707.05(a).)

U.S. Patent and Trademark Office
PTO-892 (Rev. 9-96)

Part of Paper No. 6

*U.S. GPO: 1997-417-381/62700

GAU 2785

Attorney Docket No.: SPY-004

IN THE UNITED STATES PATENT AND TRADEMARK OFFICE

March 11, 1999

RECEIVED
MAR 24 1999
Group 2700

Assistant Commissioner for Patents
Washington, D.C. 20231

Re: Applicants: William P. Bialick et al.
Assignee: Spyrus, Inc.
Title: Peripheral Device With Integrated Security Functionality
Serial No.: 08/869,305
Filed: June 4, 1997
Examiner: L. Hua
Group Art Unit: 2785

Transmitted herewith are the following documents in the above-identified application:

(1) Response to Office Action (16 pages);
(2) Check for $63.00 (Check No. 1385);
(3) Return receipt postcard; and
(4) This sheet in duplicate.

The fee is calculated as follows (small entity status is claimed):

CLAIMS AS AMENDED

	Claims After Amendment		Highest Number Paid For		Additional Claims		Rate		Fee
Total Claims:	39	-	32	=	7	X	$9	= $	63.00
Independent Claims:	8	-	12	=	0	X	$38	= $	0.00
___ First filing of one or more multiple dependent claims ($270 total fee)								$	0.00
___ Fee for Petition for Extension of Time (___ months)								$	0.00
TOTAL FEE:								**$**	**63.00**

I hereby certify that this correspondence is being deposited with the United States Postal Service as first class mail in an envelope addressed to: Assistant Commissioner for Patents, Washington, D.C. 20231, on March 11, 1999.

3-11-99 David R. Graham
Date Signature

Respectfully submitted,

David R. Graham

David R. Graham
Reg. No. 36,150
Attorney for Applicants
1337 Chewpon Ave.
Milpitas, CA 95035
Tel. No.: (408) 945-9912

Attorney Docket No.: SPY-004

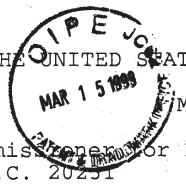

IN THE UNITED STATES PATENT AND TRADEMARK OFFICE

March 11, 1999

RECEIVED
MAR 24 1999
Group 2700

Assistant Commissioner for Patents
Washington, D.C. 20231

Re: Applicants: William P. Bialick et al.
Assignee: Spyrus, Inc.
Title: Peripheral Device With Integrated Security Functionality
Serial No.: 08/869,305
Filed: June 4, 1997
Examiner: L. Hua
Group Art Unit: 2785

Transmitted herewith are the following documents in the above-identified application:

(1) Response to Office Action (16 pages);
(2) Check for $63.00 (Check No. 1385);
(3) Return receipt postcard; and
(4) This sheet in duplicate.

The fee is calculated as follows (small entity status is claimed):

CLAIMS AS AMENDED

	Claims After Amendment		Highest Number Paid For		Additional Claims		Rate		Fee
Total Claims:	39	-	32	=	7	X	$9	= $	63.00
Independent Claims:	8	-	12	=	0	X	$38	= $	0.00
___ First filing of one or more multiple dependent claims ($270 total fee)								$	0.00
___ Fee for Petition for Extension of Time (___ months)								$	0.00
TOTAL FEE:								**$**	**63.00**

I hereby certify that this correspondence is being deposited with the United States Postal Service as first class mail in an envelope addressed to: Assistant Commissioner for Patents, Washington, D.C. 20231, on March 11, 1999.

3-11-99 David R. Graham
Date Signature

Respectfully submitted,

David R. Graham

David R. Graham
Reg. No. 36,150
Attorney for Applicants
1337 Chewpon Ave.
Milpitas, CA 95035
Tel. No.: (408) 945-9912

IN THE UNITED STATES PATENT AND TRADEMARK OFFICE

Applicants: William P. Bialick et al.

Assignee: Spyrus, Inc.

Title: Peripheral Device With Integrated Security Functionality

Serial No.: 08/869,305 Filed: June 4, 1997

Examiner: L. Hua Group Art Unit: 2785

Attorney Docket No.: SPY-004

#7/A

OIPE JC
MAR 15 1999
PATENT & TRADEMARK OFFICE

RECEIVED
MAR 24 1999 3/25/99
Group 2700

Milpitas, California
March 11, 1999

Assistant Commissioner for Patents
Washington, D.C. 20231

RESPONSE TO OFFICE ACTION

Sir:

Please enter the following response to the Office Action dated December 11, 1998, in the above-identified application.

IN THE SPECIFICATION

At page 5, line 19, delete "or" and substitute --,--;

line 20, after "device" (first occurrence), insert --or input to the peripheral device by a person--.

A'

At page 8, line 4, delete "computational" and substitute --computing--;

line 5, delete "computational" and substitute --computing--.;

03/17/1999 RMABAT 00000045 08869305
01 FC:203 63.00 OP

line 10, delete "another" and substitute --the peripheral--;
after "device" (second occurrence), insert --302--;
line 11, delete "another" and substitute --the peripheral--;
after "device" (first occurrence), insert --302--.

At page 9, line 22, delete "3A" and substitute --3B--.

At page 13, line 5, delete "an".

At page 14, line 32, after ")", insert --to enable performance of security operations--.

A2

At page 16, line 21, delete "colloquially" and substitute --informally--.

At page 20, line 31, delete "implemented" and substitute --operated--.

At page 22, line 9, delete "This" and substitute --The--;
line 18, delete "peripheral" and substitute --target--;
line 30, after "device.", insert --(Of course, in this case, security functionality, i.e., user authentication, is used as part of the step 715)--.

A3

At page 24, line 18, after "below", insert --(see FIGS. 8, 9A and 9B)--.

At page 28, line 13, delete "be";

after "also", insert --be--;

line 18, delete "with" and substitute

--to provide--.

At page 29, line 5, after "806", insert --,--.

At page 33, line 7, delete "a" (first occurrence) and

substitute --the--.

At page 34, line 18, delete "peripheral".

IN THE CLAIMS

Please cancel Claims 1, 19, 21, 24, 27 and 28.

Please amend the claims as follows:

2. (Amended) A peripheral device as in Claim [1] ~~1~~, wherein the target means comprises means for non-volatilely storing data.

3. (Amended) A peripheral device as in Claim [1] ~~1~~, wherein the target means comprises means for enabling communication between the host computing device and a remote device.

4. (Amended) A peripheral device as in Claim [1] ~~1~~, wherein the target means comprises a biometric device.

5. (Amended) A peripheral device as in Claim [1] 1, wherein the target means comprises means for communicating with a smart card.

16. (Amended) A peripheral device [as in Claim 1], [further] comprising:

security means for enabling one or more security operations to be performed on data;

target means for enabling a defined interaction with a host computing device;

means for enabling communication between the security means and the target means;

means for enabling communication with a host computing device;

means for operably connecting the security means and/or the target means to the host computing device in response to an instruction from the host computing device; and

means for mediating communication of data between the host computing device and the target means so that the communicated data must first pass through the security means.

17. (Amended) A peripheral device [as in Claim 1], [further] comprising:

security means for enabling one or more security operations to be performed on data;

target means for enabling a defined interaction with a host computing device;

means for enabling communication between the security means and the target means;

means for enabling communication with a host computing device;

means for operably connecting the security means and/or the target means to the host computing device in response to an instruction from the host computing device; and

means for providing to a host computing device, in response to a request from the host computing device for information regarding the type of the peripheral device, information regarding the function of the target means [for enabling a defined interaction with a host computing device].

---

13. (Amended) A peripheral device as in Claim 8, further comprising means for providing to a host computing device, in response to a request from the host computing device for information regarding the type of the peripheral device, information regarding the function of the target means [for enabling a defined interaction with a host computing device].

14. (Amended) A peripheral device, comprising:

security means for enabling one or more security operations to be performed on data;

target means for enabling a defined interaction with a host computing device;

means for enabling communication between the security means and the target means;

means for enabling communication with a host computing device; and

means for providing to a host computing device, in response to a request from the host computing device for information regarding the type of the peripheral device, information regarding the function of the target means [for enabling a defined interaction with a host computing device].

---

14 13
~~20~~. (Amended) A peripheral device as in Claim [1] ~~37~~, wherein the solid-state disk storage device comprises an ATA format flash disk drive.

---

17 36 16
~~22~~. (Amended) A peripheral device as in Claim [21] ~~38~~, wherein the wireless communication means comprises a wireless modem.

18 16
~~23~~. (Amended) A peripheral device as in Claim [21] ~~38~~, wherein the wireless communication means comprises a wireless LAN transceiver.

20~~25~~. (Amended) A peripheral device as in Claim [24]19~~11~~, wherein the biometric device comprises a fingerprint scanning device.

A8

21~~26~~. (Amended) A peripheral device as in Claim [24] 19~~11~~, wherein the biometric device comprises a retinal scanning device.

37~~30~~. (Amended) A data security system, comprising:

a host computing device including one or more device interfaces adapted to enable communication with another device;

a peripheral device, comprising:

security means for enabling one or more security operations to be performed on data;

target means for enabling a defined interaction with a host computing device; and

A9

means for enabling communication between the security means and the target means;

means for enabling communication with a host computing device; and

means for providing to a host computing device, in response to a request from the host computing device for information regarding the type of the peripheral device, information regarding the function of the <u>target</u> means [for enabling a defined interaction with a host computing device].

39~~32~~. (Amended) For use in a peripheral device adapted for communication with a host computing device, performance of one or more security operations on data, and interaction with a host computing device in a defined way, a method comprising the steps of:

communicating with the [receiving an instruction from a] host computing device to exchange data between the host computing device and [regarding operation of] the peripheral device; [and]

[performng] performing one or more security operations and the defined interaction [in response to the instruction from the host computing device] on the exchanged data; and

mediating communication of the exchanged data between the host computing device and the peripheral device so that the exchanged data must first pass through means for performing the one or more security operations.

Please enter the following new claims:

7~~33~~. (New) A peripheral device as in Claim ~~6~~ 1, wherein the target means comprises means for non-volatilely storing data.

8~~34~~. (New) A peripheral device as in Claim 6 ~~1~~, wherein the target means comprises means for enabling communication between the host computing device and a remote device.

9~~35~~. (New) A peripheral device as in Claim 6 ~~1~~, wherein the target means comprises a biometric device.

10 ~~36~~. (New) A peripheral device as in Claim ~~7~~ 6, wherein the target means comprises means for communicating with a smart card.

13 ~~37~~. (New) A peripheral device as in Claim ~~8~~ 12, wherein the means for non-volatilely storing data further comprises a solid-state disk storage device.

16 ~~38~~. (New) A peripheral device as in Claim ~~10~~ 15, wherein the means for enabling communication between the host computing device and a remote device further comprises wireless communication means.

11

26 ~~39~~. (New) A peripheral device as in Claim ~~15~~ 25, wherein the means for non-volatilely storing data further comprises a solid-state disk storage device.

27 ~~40~~. (New) A peripheral device as in Claim ~~39~~ 26, wherein the solid-state disk storage device comprises an ATA format flash disk drive.

29 ~~41~~. (New) A peripheral device as in Claim ~~16~~ 28, wherein the means for enabling communication between the host computing device and a remote device further comprises wireless communication means.

30 ~~42~~. (New) A peripheral device as in Claim ~~41~~ 29, wherein the wireless communication means comprises a wireless modem.

31/~~43~~. (New) A peripheral device as in Claim ~~41~~ 29, wherein the wireless communication means comprises a wireless LAN transceiver.

A11

33/~~44~~. (New) A peripheral device as in Claim ~~17~~ 32, wherein the biometric device comprises a fingerprint scanning device.

34/~~45~~. (New) A peripheral device as in Claim ~~17~~ 32, wherein the biometric device comprises a retinal scanning device.

IN THE ABSTRACT

Line 17, delete "or" and substitute --,--.

Line 18, after "device" (second occurrence), insert --for input to the peripheral device by a person--.

A12

Line 26, delete "," (third occurrence).

Line 27, delete "as described further below".

REMARKS

Claims 1-32 were filed and are pending. Claims 2, 3, 5, 9, 10, 12, 15, 16, 18-23 and 27 were not examined, since directed to species that were not provisionally elected for examination by the Examiner. Claims 24-26 were rejected under 35 U.S.C. § 102. Claims 1, 4, 8, 11, 14, 17 and 28-32 were rejected under 35 U.S.C. § 103. Claims 6, 7 and 13 were objected to as dependent on a rejected claim. Claims 1, 19, 21, 24, 27 and 28 have been canceled. Claims 2-7, 13, 14, 20, 22, 23, 25, 26, 30 and 32 have been amended. Claims 33-45 have been added.

Reconsideration and allowance of Claims 2-18, 20, 22, 23, 25, 26, 29-32, and allowance of Claims 33-45 is requested.

In the Office Action, the Examiner stated:

> This application contains claims directed to the following patentably distinct species of the claimed invention: first, second, third, fourth species of target means.
>
> Applicant is required under 35 U.S.C. 121 to elect a single disclosed species for prosecution on the merits to which the claims shall be restricted if no generic claim is finally held to be allowable. Currently, the target means is generic.
>
> Applicant is advised that a response to this requirement must include an identification of the species that is elected consonant with this requirement, and a listing of all claims readable thereon, including any claims subsequently added. An argument that a claim is allowable or that all claims are generic is considered nonresponsive unless accompanied by an election.
>
> Upon the allowance of a generic claim, applicant will be entitled to consideration of claims to additional species which are written in dependent form or otherwise include all the limitations of an allowed generic claim as provided by 37 CFR 1.141. If claims are added after the election, applicant must indicate which are readable upon the elected species. MPEP § 809.02(a).
>
> Should applicant traverse on the ground that the species are not patentably distinct, applicant should submit evidence or identify such evidence now of record showing the species to be obvious variants or clearly admit on the record that this is the case. In either instance, if the examiner finds one of the inventions unpatentable over the prior art, the evidence or admission may be used in a rejection under 35 U.S.C. 103(a) of the other invention.
>
> During a telephone conversation with Mr. [D]avid R. Graham (Reg. No. 36,160 [sic]) on November 6, 1998, a provisional election was made with traverse to prosecute the invention of the first species, claims, 1, 4, 6, 7, 8, 11, 13, 14, 17, 24-26, 28, 29, 30, 31 and 32. Affirmation of this election must be made by applicant in responding to this Office action. Claims 2, 3, 5, 20, 9, 10, 12, 15, 16, 18, 19-20, 21-23 and 27

are withdrawn from further consideration by the examiner, 37 CFR 1.142(b), as being drawn to a non-elected invention.

Applicants confirm the provisional election to prosecute the invention of the first species (i.e., the species in which the target means can be embodied by a biometric device), originally pending claims 1, 4, 6-8, 11, 13, 14, 17, 24-26 and 28-32 readable thereon. Applicants have added Claims 33-45. Claims 35, 44 and 45 are also readable on the invention of the elected first species. Claims 33, 37, 39 and 40 are readable on the invention of the species in which the target means can be embodied by means for non-volatilely storing data. Claims 34, 38 and 41-43 are readable on the invention of the species in which the target means can be embodied by means for enabling communication between the host computing device and a remote device. Claim 36 is readable on the invention of the species in which the target means can be embodied by means for communicating with a smart card.

However, in view of the above amendments and the remarks below, Applicants contend that all pending claims, including those readable on non-elected species, are either an allowable generic claim (i.e., Claims 6, 7, 8, 13, 14 and 29-32) or are dependent on an allowable generic claim (i.e., Claims 2-5, 9-12, 15-18, 20, 22, 23, 25, 26 and 33-45).

The Examiner further stated in the Office Action that "Claims 6, 7, and 13 are objected to as they depend on rejected claims," i.e., Claims 6, 7 and 13 would be allowable if rewritten in independent form to include the limitations of the base claim

and any intervening claims. Claims 6, 7 and 13 have been rewritten in this manner and are therefore in condition for allowance. (Claims 7 and 13 have also been amended to simplify a recitation of the target means.) Further, Claims 2-5 have each been amended to depend upon Claim 6 and are therefore allowable as dependent on an allowable claim. Additionally, new Claims 33-36 each depend upon Claim 7 and are therefore allowable as dependent on an allowable claim.

Before amendment, Claim 6 recited "[a] peripheral device as in Claim 1, further comprising means for mediating communication of data between the host computing device and the target means so that the communicated data must first pass through the security means" (emphasis added). Since Claim 1 was rejected under 35 U.S.C. § 103 as unpatentable over Novis et al., the above-emphasized recitation in Claim 6 is apparently the basis for allowability of Claim 6. Claims 8 and 29 were also rejected under 35 U.S.C. § 103 as unpatentable over Novis et al. However, Claims 8 and 29, like Claim 6, recite "means for mediating communication of data between the host computing device and the target means so that the communicated data must first pass through the security means." Therefore, Applicants submit that Claims 8 and 29, like Claim 6, are allowable. Further, Claims 9-12, which each depend upon Claim 8, are therefore allowable as dependent on an allowable claim. Additionally, Claims 20, 22, 23, 25 and 26, which have been amended so that each depends either directly or indirectly upon one of Claims 9-11, are also allowable as dependent on an allowable claim. Similarly, new

Claims 37 and 38, which depend upon Claims 9 and 10, respectively, are allowable as dependent on an allowable claim.

Before amendment, Claim 7 recited "[a] peripheral device as in Claim 1, further comprising means for providing to a host computing device, in response to a request from the host computing device for information regarding the type of the peripheral device, information regarding the function of the means for enabling a defined interaction with a host computing device" (emphasis added). Since Claim 1 was rejected under 35 U.S.C. § 103 as unpatentable over Novis et al., the above-emphasized recitation in Claim 7 is apparently the basis for allowability of Claim 7. Claims 14 and 30 were also rejected under 35 U.S.C. § 103 as unpatentable over Novis et al. However, before amendment, Claims 14 and 30, like Claim 7, recited "means for providing to a host computing device, in response to a request from the host computing device for information regarding the type of the peripheral device, information regarding the function of the means for enabling a defined interaction with a host computing device." (Claims 14 and 30 have been amended, like Claim 7, to simplify a recitation of the target means.) Therefore, Applicants submit that Claims 14 and 30, like Claim 7, are allowable. Further, Claims 15-18, which each depend upon Claim 14, are therefore allowable as dependent on an allowable claim. Additionally, new Claims 39-45, which each depend upon one of Claims 15-17 either directly or indirectly, are also allowable as dependent on an allowable claim.

Claim 31 recites "[f]or use in a peripheral device adapted for communication with a host computing device, performance of one or more security operations on data, and interaction with a host computing device in a defined way, a method comprising the steps of: receiving a request from a host computing device for information regarding the type of the peripheral device; and providing to the host computing device, in response to the request, information regarding the type of the defined interaction (emphasis added). The above-emphasized part of Claim 31 recites functionality similar to that of allowable Claims 7, 13, 14 and 30. Therefore, Applicants submit that Claim 31 is allowable.

As amended, Claim 32 recites "[f]or use in a peripheral device adapted for communication with a host computing device, performance of one or more security operations on data, and interaction with a host computing device in a defined way, a method comprising the steps of: communicating with the host computing device to exchange data between the host computing device and the peripheral device; performing one or more security operations and the defined interaction on the exchanged data; and mediating communication of the exchanged data between the host computing device and the peripheral device so that the exchanged data must first pass through means for performing the one or more security operations" (emphasis added). The above-emphasized part of Claim 32 recites functionality similar to that of allowable Claims 6, 8 and 29. Therefore, Applicants submit that Claim 32 is allowable.

Claims 1, 19, 21, 24, 27 and 28 have been canceled, thereby obviating the rejections of those claims.

In view of the foregoing, Applicants submit that Claims 2-18, 20, 22, 23, 25, 26 and 29-41 are in condition for allowance.

CONCLUSION

Claims 1-32 were pending. Claims 2, 3, 5, 9, 10, 12, 15, 16, 18-23 and 27 were not examined, since directed to species that were not provisionally elected for examination by the Examiner. Claims 1, 4, 8, 11, 14, 17, 24-26 and 28-32 were rejected. Claims 6, 7 and 13 were objected to. Claims 1, 19, 21, 24, 27 and 28 have been canceled. Claims 2-7, 13, 14, 20, 22, 23, 25, 26, 30 and 32 have been amended. Claims 33-45 have been added. In view of the foregoing, it is requested that Claims 2-18, 20, 22, 23, 25, 26 and 29-45 be allowed. If the Examiner wishes to discuss any aspect of this application, the Examiner is invited to telephone Applicants' undersigned attorney at (408) 945-9912.

I hereby certify that this correspondence is being deposited with the United States Postal Service as first class mail in an envelope addressed to: Assistant Commissioner for Patents, Washington, D.C. 20231, on March 11, 1999.

3-11-99 David R. Graham
Date Signature

Respectfully submitted,

David R. Graham

David R. Graham
Reg. No. 36,150
Attorney for Applicants

Hua 8/869,305

GAU 2785

Attorney Docket No.: SPY-004

OIPE JC15 MAR 18 1999 PATENT & TRADEMARK OFFICE

IN THE UNITED STATES PATENT AND TRADEMARK OFFICE

March 12, 1999

Assistant Commissioner for Patents
Washington, D.C. 20231

Re: Applicants: William P. Bialick et al.
Assignee: Spyrus, Inc.
Title: Peripheral Device With Integrated Security Functionality
Serial No.: 08/869,305
Filed: June 4, 1997
Examiner: L. Hua
Group Art Unit: 2785

RECEIVED
MAR 23 1999
Group 2700

A

Transmitted herewith are the following documents in the above-identified application:

(1) Supplemental Response to Office Action (3 pages); and
(2) Return receipt postcard.

The fee is calculated as follows (small entity status is claimed):

CLAIMS AS AMENDED

	Claims After Amendment		Highest Number Paid For		Additional Claims		Rate		Fee
Total Claims:	39	-	39	=	0	X	$9	= $	0.00
Independent Claims:	9	-	12	=	0	X	$38	= $	0.00
___ First filing of one or more multiple dependent claims ($270 total fee)								$	0.00
___ Fee for Petition for Extension of Time (___ months)								$	0.00
TOTAL FEE:								$	0.00

I hereby certify that this correspondence is being deposited with the United States Postal Service as first class mail in an envelope addressed to: Assistant Commissioner for Patents, Washington, D.C. 20231, on March 12, 1999.

3-12-99 David R. Graham
Date Signature

Respectfully submitted,

David R. Graham

David R. Graham
Reg. No. 36,150
Attorney for Applicants
1337 Chewpon Ave.
Milpitas, CA 95035
Tel. No.: (408) 945-9912

OIPE JC15 MAR 18 1999 PATENT & TRADEMARK OFFICE

IN THE UNITED STATES PATENT AND TRADEMARK OFFICE

#8/B

Applicants: William P. Bialick et al.

Assignee: Spyrus, Inc.

Title: Peripheral Device With Integrated Security Functionality

Serial No.: 08/869,305 Filed: June 4, 1997

Examiner: L. Hua Group Art Unit: 2785

Attorney Docket No.: SPY-004

4/1/99

Milpitas, California
March 12, 1999

Assistant Commissioner for Patents
Washington, D.C. 20231

SUPPLEMENTAL RESPONSE TO OFFICE ACTION

Sir:

Please enter the following supplemental response to the Office Action dated December 11, 1998, in the above-identified application. A Response to Office Action was previously submitted by Applicants on March 11, 1999 (hereinafter, the "previous Office Action response"), responding to that Office Action.

IN THE CLAIMS

Please amend the claims as follows:

B1

~~13~~ 23. (Twice Amended) A peripheral device [as in Claim 8], [further] comprising:

security means for enabling one or more security operations to be performed on data;

target means for enabling a defined interaction with a host computing device;

means for enabling communication between the security means and the target means;

means for enabling communication with a host computing device;

means for mediating communication of data between the host computing device and the target means so that the communicated data must first pass through the security means; and

means for providing to a host computing device, in response to a request from the host computing device for information regarding the type of the peripheral device, information regarding the function of the target means.

REMARKS

In the previous Office Action response, Applicants stated that Claim 13 had been rewritten in independent form to include the limitations of the base claim and any intervening claims and was, therefore, in condition for allowance. However, Claim 13 was inadvertently not amended in that way in the previous Office Action response. Claim 13 has been amended herein as indicated above.

Claims 2-18, 20, 22, 23, 25, 26 and 29-45 are pending. Allowance of Claims 2-18, 20, 22, 23, 25, 26 and 29-45 is requested. If the Examiner wishes to discuss any aspect of this application, the Examiner is invited to telephone Applicants' undersigned attorney at (408) 945-9912.

I hereby certify that this correspondence is being deposited with the United States Postal Service as first class mail in an envelope addressed to: Assistant Commissioner for Patents, Washington, D.C. 20231, on March 12, 1999.

3-12-99 David R. Graham
Date Signature

Respectfully submitted,

David R. Graham

David R. Graham
Reg. No. 36,150
Attorney for Applicants

B

GAU 2785

IN THE UNITED STATES PATENT AND TRADEMARK OFFICE

#9

RECEIVED
APR 05 1999
Group 2700

OIPE
MAR 30 1999
PATENT & TRADEMARK OFFICE

Applicants: William P. Bialick et al.

Assignee: Spyrus, Inc.

Title: Peripheral Device With Integrated Security Functionality

Serial No.: 08/869,305 Filed: June 4, 1997

Examiner: L. Hua Group Art Unit: 2785

Attorney Docket No.: SPY-004

Milpitas, California
March 24, 1999

Assistant Commissioner for Patents
Washington, D.C. 20231

INFORMATION DISCLOSURE STATEMENT
WITH CERTIFICATION UNDER 37 C.F.R. §1.97(e)(2)

Sir:

Pursuant to 37 C.F.R. § 1.56, § 1.97 and § 1.98, Applicants bring the documents (copies enclosed) listed on the enclosed Form PTO-1449 to the Examiner's attention in the above-identified application. Citation of these documents shall not be construed as an admission that the documents are necessarily prior art with respect to the instant invention. Also, citation of these documents shall not be construed as an admission that the information disclosed therein is, or is considered to be, material to patentability as defined in 37 C.F.R. § 1.56(b).

The undersigned hereby certifies in accordance with 37 CFR §1.97(e)(2) that no item of information contained in this information disclosure statement was cited in a communication from a foreign patent office in a counterpart foreign application

or, to the knowledge of the person signing the certification after making reasonable inquiry, was known to any individual designated in §1.56(c) more than three months prior to the filing of this information disclosure statement.

I hereby certify that this correspondence is being deposited with the United States Postal Service as first class mail in an envelope addressed to: Assistant Commissioner for Patents, Washington, D.C. 20231, on March 24, 1999.

3-24-99 David R. Graham
Date Signature

Respectfully submitted,

David R. Graham

David R. Graham
Reg. No. 36,150
Attorney for Applicants

part of #9

SHEET 1 OF 1

U.S. DEPT OF COMMERCE - PATENT AND TRADEMARK OFFICE INFORMATION DISCLOSURE CITATION (Use several sheets if necessary)	ATTORNEY DOCKET NO.: SPY-004	SERIAL NO.: 08/869,305
	APPLICANTS: William P. Bialick et al.	
	FILING DATE: June 4, 1997	GROUP ART UNIT: 2785

U.S. PATENTS

EXAMINER'S INITIALS	PATENT NUMBER	ISSUE DATE	INVENTOR(S)	CLASS	SUB-CLASS	FILING DATE
LVH	5,694,335	12/2/97	Hollenberg	364	514	3/12/96
LVH	5,297,206	3/22/94	Orton	380	30[illegible]	10/7/92

RECEIVED
APR 05 1999
Group 2700

OIPE JC15
MAR 30 1999
PATENT & TRADEMARK OFFICE

FOREIGN PATENT DOCUMENTS

EXAMINER'S INITIALS	DOCUMENT NUMBER	PUBLICATION DATE	NAME(S)	COUNTRY	TRANSLATION? YES	TRANSLATION? NO

COMMONLY OWNED, CO-PENDING U.S. PATENT APPLICATIONS

EXAMINER'S INITIALS	SERIAL NUMBER	ATTORNEY DOCKET NO.	APPLICANT(S)	CLASS	SUB-CLASS	FILING DATE

OTHER DOCUMENTS

EXAMINER'S INITIALS	AUTHOR(S), TITLE, DATE, PERTINENT PAGES, ETC.

EXAMINER: Ly V. Hua	DATE CONSIDERED: 6/2/1999

Examiner: Initial if citation considered, whether or not citation is in conformance with MPEP §609. Draw line through citation if not in conformance and not considered. Include copy of this form with next communication to the applicant.

Form PTO-1449

08/869,305

UNITED STATES DEPARTMENT OF COMMERCE
Patent and Trademark Office
Address: COMMISSIONER OF PATENTS AND TRADEMARKS
Washington, D.C. 20231

APPLICATION NUMBER	FILING DATE	FIRST NAMED APPLICANT	ATTORNEY DOCKET NO.
08/869,305	06/04/97	BIALICK	

EXAMINER SPY-004

LM21/0607

DAVID R GRAHAM
1337 CHEWPON AVENUE
MILPITAS CA 95035

ART UNIT	PAPER NUMBER
HUA, L.	10

DATE MAILED: 2785

06/07/99

This is a communication from the examiner in charge of your application.
COMMISSIONER OF PATENTS AND TRADEMARKS

NOTICE OF ALLOWABILITY

All claims being allowable, PROSECUTION ON THE MERITS IS (OR REMAINS) CLOSED in this application. If not included herewith (or previously mailed), a Notice of Allowance and Issue Fee Due or other appropriate communication will be mailed in due course.

☑ This communication is responsive to Applicant's correspondence filed on March 15, 18, 30, 1999.

☑ The allowed claim(s) is/are 2-10, 20, 22, 23, 25, 26, and 29-45.

☐ The drawings filed on _____ are acceptable.

☐ Acknowledgement is made of a claim for foreign priority under 35 U.S.C. § 119(a)-(d).

☐ All ☐ Some* ☐ None of the CERTIFIED copies of the priority documents have been

☐ received.

☐ received in Application No. (Series Code/Serial Number) _____.

☐ received in this national stage application from the International Bureau (PCT Rule 17.2(a)).

*Certified copies not received: _____.

☐ Acknowledgement is made of a claim for domestic priority under 35 U.S.C. § 119(e).

A SHORTENED STATUTORY PERIOD FOR RESPONSE to comply with the requirements noted below is set to EXPIRE **THREE MONTHS** FROM THE "DATE MAILED" of this Office action. Failure to timely comply will result in ABANDONMENT of this application. Extensions of time may be obtained under the provisions of 37 CFR 1.136(a).

☐ Note the attached EXAMINER'S AMENDMENT or NOTICE OF INFORMAL APPLICATION, PTO-152, which discloses that the oath or declaration is deficient. A SUBSTITUTE OATH OR DECLARATION IS REQUIRED.

☑ Applicant MUST submit NEW FORMAL DRAWINGS

☑ because the originally filed drawings were declared by applicant to be informal.

☐ including changes required by the Notice of Draftperson's Patent Drawing Review, PTO-948, attached hereto or to Paper No. _____.

☐ including changes required by the proposed drawing correction filed on _____, which has been approved by the examiner.

☐ including changes required by the attached Examiner's Amendment/Comment.

Identifying indicia such as the application number (see 37 CFR 1.84(c)) should be written on the reverse side of the drawings. The drawings should be filed as a separate paper with a transmittal letter addressed to the Official Draftperson.

☐ Note the attached Examiner's comment regarding REQUIREMENT FOR THE DEPOSIT OF BIOLOGICAL MATERIAL.

Any response to this letter should include, in the upper right hand corner, the APPLICATION NUMBER (SERIES CODE/SERIAL NUMBER). If applicant has received a Notice of Allowance and Issue Fee Due, the ISSUE BATCH NUMBER and DATE of the NOTICE OF ALLOWANCE should also be included.

Attachment(s)

☐ Notice of References Cited, PTO-892

☑ Information Disclosure Statement(s), PTO-1449, Paper No(s). 9

☐ Notice of Draftsperson's Patent Drawing Review, PTO-948

☐ Notice of Informal Patent Application, PTO-152

☐ Interview Summary, PTO-413

☐ Examiner's Amendment/Comment

☐ Examiner's Comment Regarding Requirement for Deposit of Biological Material

☐ Examiner's Statement of Reasons for Allowance

LY V. HUA
PRIMARY EXAMINER

PTOL-37 (Rev. 10/95)

☆ U.S. GOVERNMENT PRINTING OFFICE: 1997—429-299

UNITED STATES DEPARTMENT OF COMMERCE
Patent and Trademark Office

NOTICE OF ALLOWANCE AND ISSUE FEE DUE

LM21/0607

DAVID R GRAHAM
1337 CHEWPON AVENUE
MILPITAS CA 95035

APPLICATION NO.	FILING DATE	TOTAL CLAIMS	EXAMINER AND GROUP ART UNIT		DATE MAILED
08/869,305	06/04/97	039	HUA, L	2785	06/07/99

First Named Applicant	BIALICK,	35 USC 154(b) term ext. =	0 Days.

TITLE OF INVENTION: PERIPHERAL DEVICE WITH INTEGRATED SECURITY FUNCTIONALITY

ATTY'S DOCKET NO.	CLASS-SUBCLASS	BATCH NO.	APPLN. TYPE	SMALL ENTITY	FEE DUE	DATE DUE
\2 SPY-004	713-200.000	U04	UTILITY	YES	$605.00	09/07/99

THE APPLICATION IDENTIFIED ABOVE HAS BEEN EXAMINED AND IS ALLOWED FOR ISSUANCE AS A PATENT. PROSECUTION ON THE MERITS IS CLOSED.

THE ISSUE FEE MUST BE PAID WITHIN THREE MONTHS FROM THE MAILING DATE OF THIS NOTICE OR THIS APPLICATION SHALL BE REGARDED AS ABANDONED. THIS STATUTORY PERIOD CANNOT BE EXTENDED.

HOW TO RESPOND TO THIS NOTICE:

I. Review the SMALL ENTITY status shown above.
If the SMALL ENTITY is shown as YES, verify your current SMALL ENTITY status:

A. If the status is changed, pay twice the amount of the FEE DUE shown above and notify the Patent and Trademark Office of the change in status, or
B. If the status is the same, pay the FEE DUE shown above.

If the SMALL ENTITY is shown as NO:

A. Pay FEE DUE shown above, or

B. File verified statement of Small Entity Status before, or with, payment of 1/2 the FEE DUE shown above.

II. Part B-Issue Fee Transmittal should be completed and returned to the Patent and Trademark Office (PTO) with your ISSUE FEE. Even if the ISSUE FEE has already been paid by charge to deposit account, Part B Issue Fee Transmittal should be completed and returned. If you are charging the ISSUE FEE to your deposit account, section "4b" of Part B-Issue Fee Transmittal should be completed and an extra copy of the form should be submitted.

III. All communications regarding this application must give application number and batch number.
Please direct all communications prior to issuance to Box ISSUE FEE unless advised to the contrary.

IMPORTANT REMINDER: Utility patents issuing on applications filed on or after Dec. 12, 1980 may require payment of maintenance fees. It is patentee's responsibility to ensure timely payment of maintenance fees when due.

PATENT AND TRADEMARK OFFICE COPY

PTOL-85 (REV. 10-96) Approved for use through 06/30/99. (0651-0033)

7660
2785

6/21/99
93

B

IN THE UNITED STATES PATENT AND TRADEMARK OFFICE

Applicants: William P. Bialick et al.

Assignee: Spyrus, Inc.

Title: Peripheral Device With Integrated Security Functionality

Serial No.: 08/869,305 Filed: June 4, 1997

Examiner: L. Hua Group Art Unit: 2785

Batch No.: U04 Allowed: June 7, 1999

Attorney Docket No.: SPY-004

Milpitas, California
June 16, 1999

Box Issue Fee
Assistant Commissioner for Patents
Washington, D.C. 20231

RECEIVED
JUN 24 1999
Publishing Division
11

SUBMISSION OF FORMAL DRAWINGS

Sir:

In a Notice of Allowability dated June 7, 1999, in the above-identified application, Applicants were required to submit formal drawings. Applicants submit herewith nine (9) sheets of formal drawings consisting of FIGS. 1, 2, 3A, 3B, 4, 5, 6, 7, 8, 9A and 9B. The Official Draftsperson is requested to telephone Applicants' undersigned attorney at (408) 945-9912 if there are any questions or problems with the enclosed formal drawings.

I hereby certify that this correspondence is being deposited with the United States Postal Service as first class mail in an envelope addressed to: Assistant Commissioner for Patents, Washington, D.C. 20231, on June 16, 1999.

6-16-99 David R. Graham
Date Signature

Respectfully submitted,

David R. Graham
David R. Graham
Reg. No. 36,150
Attorney for Applicants

1D08869305

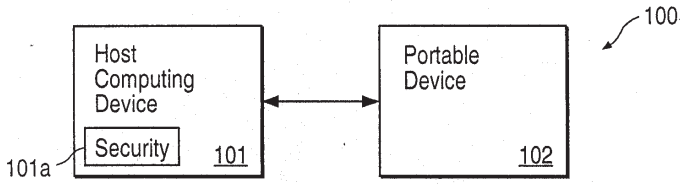

FIG. 1
(PRIOR ART)

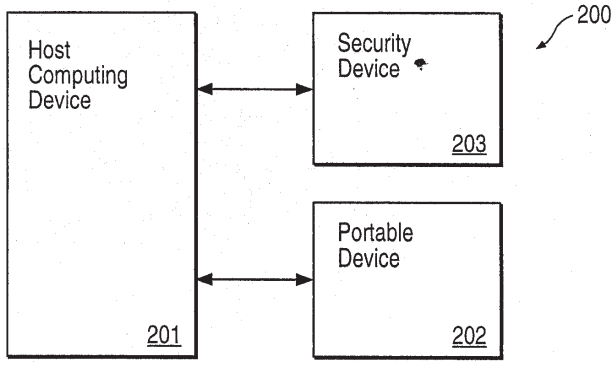

FIG. 2
(PRIOR ART)

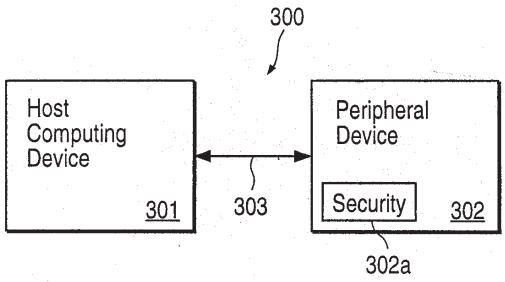
300
Host
Computing
Device
301
303
Peripheral
Device
Security
302
302a

FIG. 3A

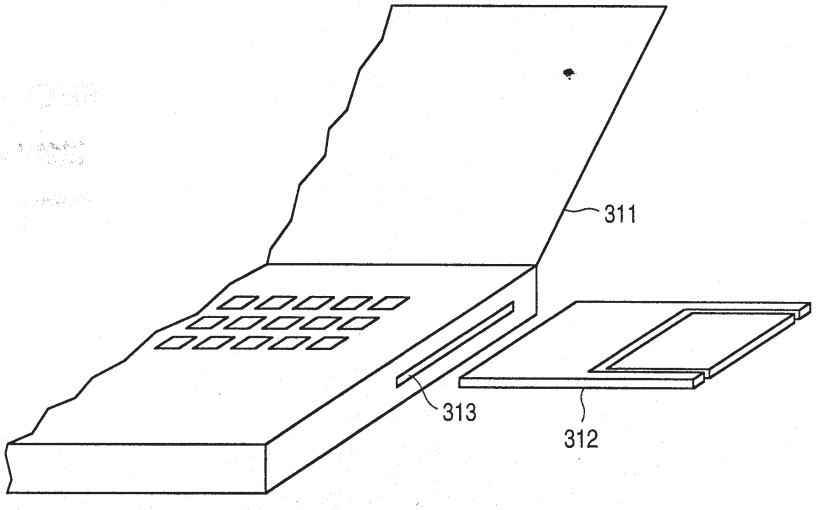
311
313
312

FIG. 3B

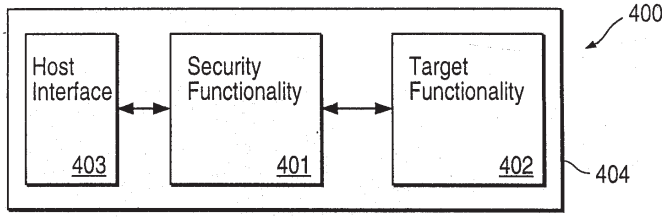
400
Host Interface
403
Security Functionality
401
Target Functionality
402
404

FIG. 4

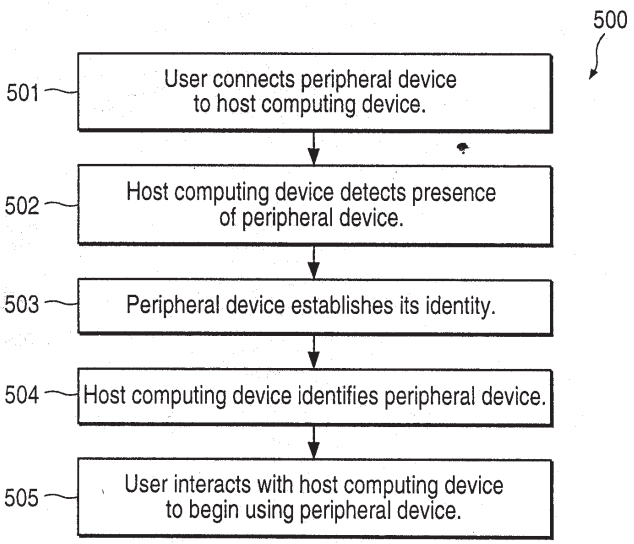
500
501
User connects peripheral device to host computing device.
502
Host computing device detects presence of peripheral device.
503
Peripheral device establishes its identity.
504
Host computing device identifies peripheral device.
505
User interacts with host computing device to begin using peripheral device.

FIG. 5

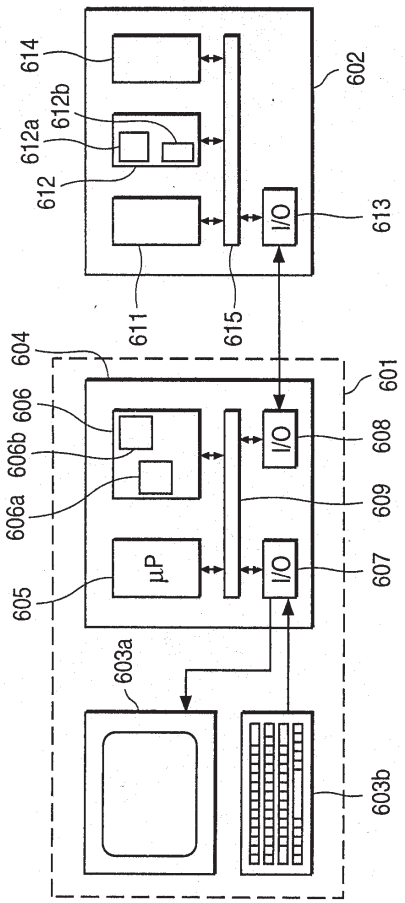
614
612b
612a
612
602
613
I/O
611
615
604
601
606
606b
606a
608
609
607
605
μP
603a
603b

FIG. 6

FIG. 7

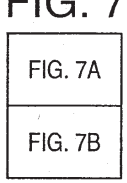
FIG. 7A
FIG. 7B

FIG. 7A

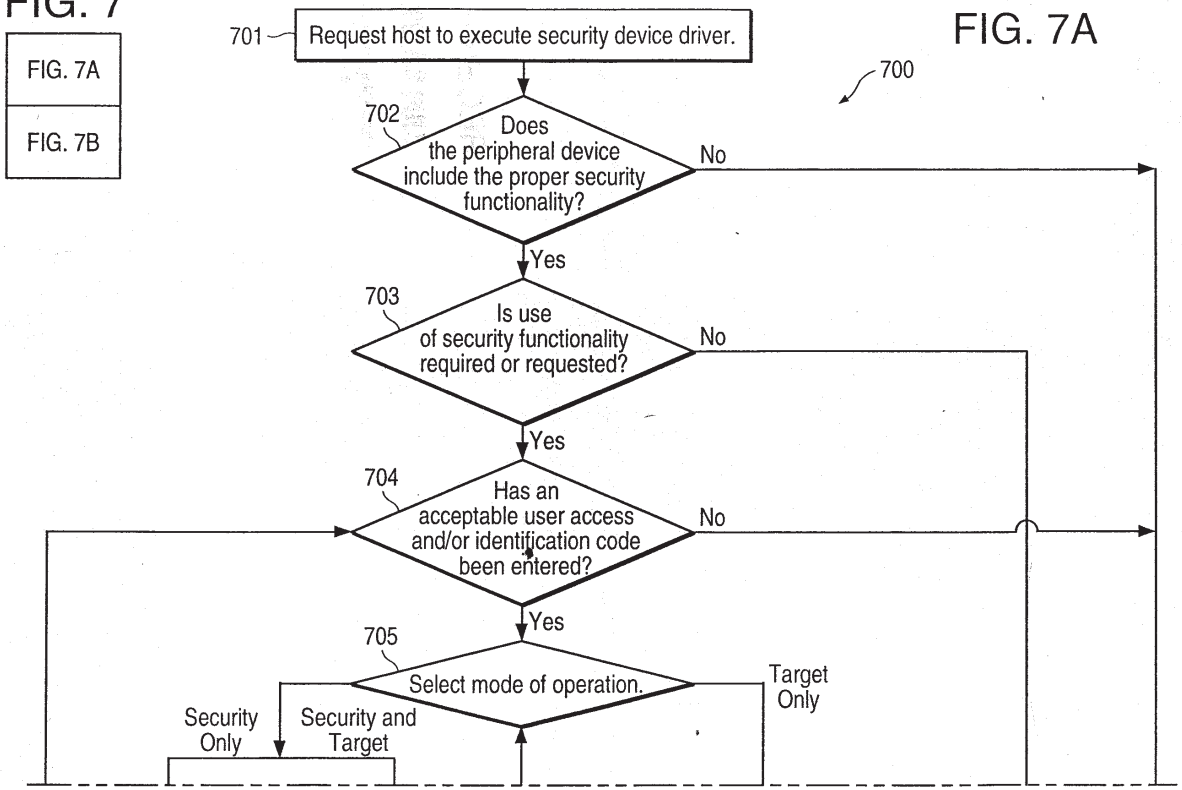
701
Request host to execute security device driver.
700
702
Does the peripheral device include the proper security functionality?
No
Yes
703
Is use of security functionality required or requested?
No
Yes
704
Has an acceptable user access and/or identification code been entered?
No
Yes
705
Select mode of operation.
Target Only
Security Only
Security and Target

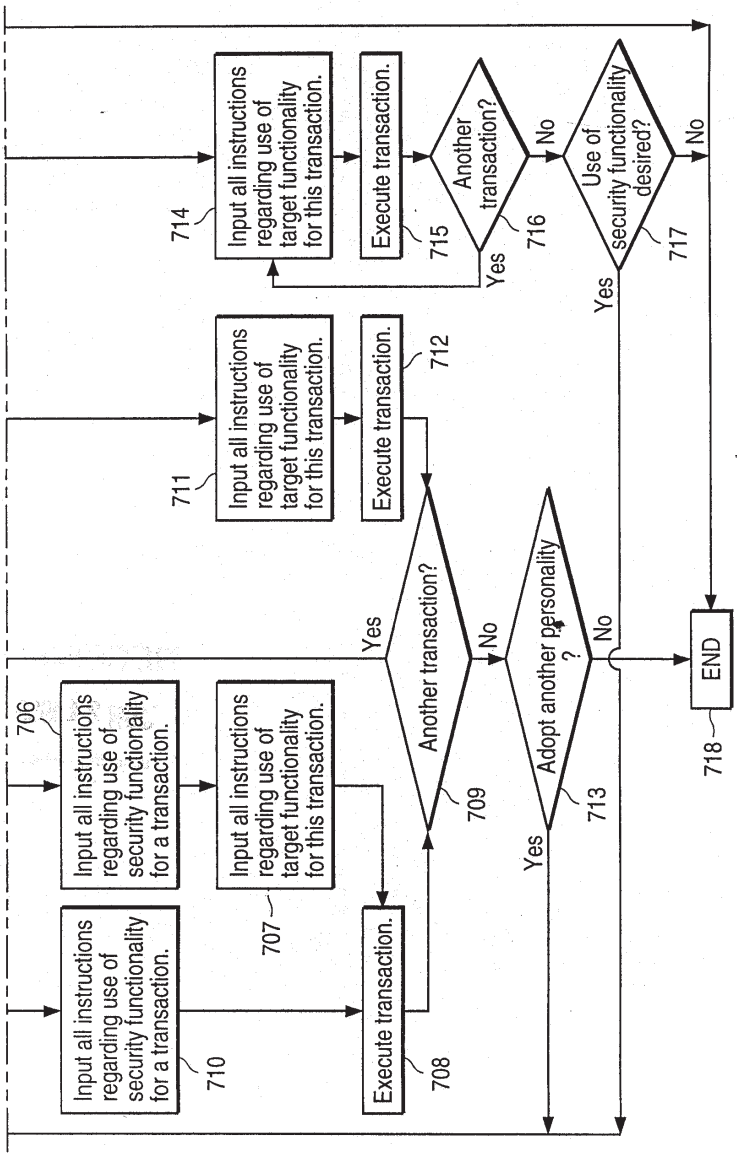
Input all instructions regarding use of security functionality for a transaction.
706
Input all instructions regarding use of security functionality for a transaction.
710
Input all instructions regarding use of target functionality for this transaction.
707
Execute transaction.
708
Another transaction?
709
Yes
No
Input all instructions regarding use of target functionality for this transaction.
711
Execute transaction.
712
Adopt another personality ?
713
Yes
No
Input all instructions regarding use of target functionality for this transaction.
714
Execute transaction.
715
Another transaction?
716
Yes
No
Use of security functionality desired?
717
Yes
No
END
718

FIG. 7B

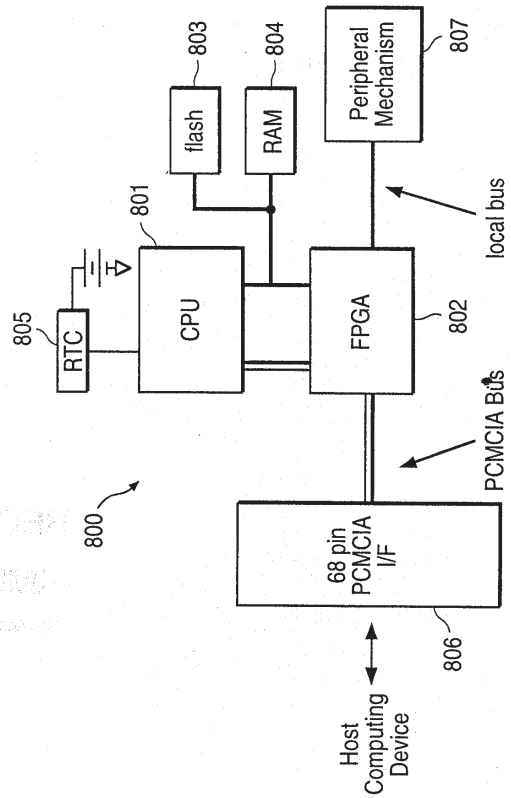
800
805
RTC
801
CPU
803
flash
804
RAM
807
Peripheral Mechanism
local bus
FPGA
802
PCMCIA Bus
68 pin PCMCIA I/F
806
Host Computing Device

FIG. 8

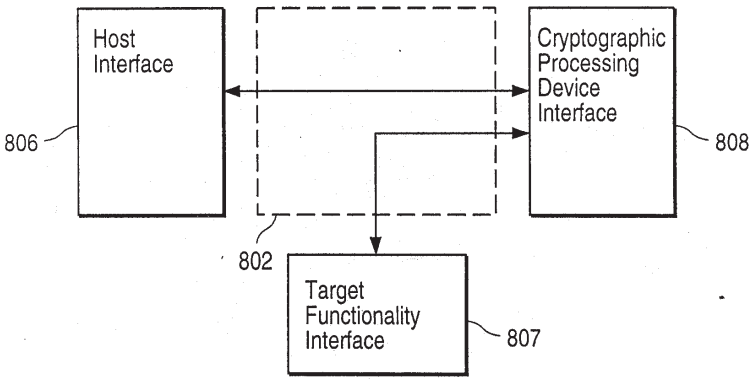
Host
Interface
806
Cryptographic
Processing
Device
Interface
808
802
Target
Functionality
Interface
807

FIG. 9A

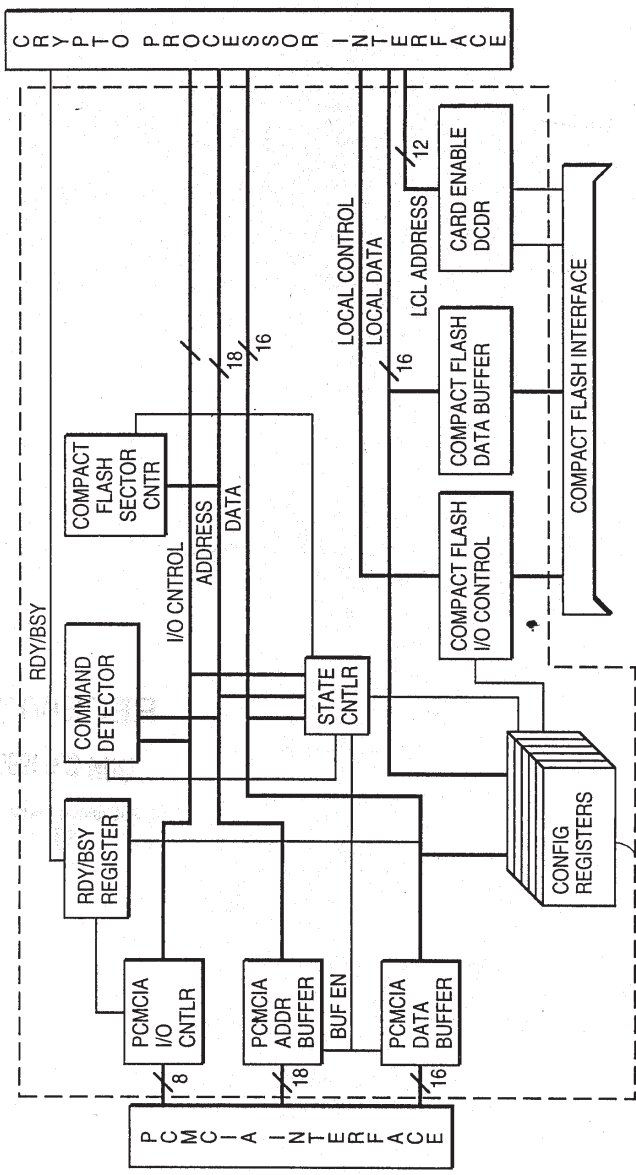
CRYPTO PROCESSOR INTERFACE
RDY/BSY
COMMAND DETECTOR
RDY/BSY REGISTER
PCMCIA I/O CNTLR
PCMCIA ADDR BUFFER
BUF EN
PCMCIA DATA BUFFER
PCMCIA INTERFACE
8
18
16
910
STATE CNTLR
CONFIG REGISTERS
911
I/O CNTROL
ADDRESS
DATA
18
16
COMPACT FLASH SECTOR CNTR
LOCAL CONTROL
LOCAL DATA
16
LCL ADDRESS
12
COMPACT FLASH I/O CONTROL
COMPACT FLASH DATA BUFFER
CARD ENABLE DCDR
COMPACT FLASH INTERFACE

FIG. 9B

IN THE UNITED STATES PATENT AND TRADEMARK OFFICE

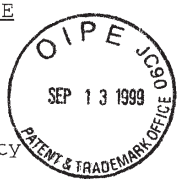

RECEIVED
DEC 07 1999
Group 2700

Applicants: William P. Bialick et al.

Assignee: Spyrus, Inc.

Title: Peripheral Device With Integrated Security Functionality

Serial No.: 08/869,305 Filed: June 4, 1997

Examiner: L. Hua Group Art Unit: 2785

Batch No.: U04 Allowed: June 7, 1999

Attorney Docket No.: SPY-004

Milpitas, California
September 7, 1999

Box Issue Fee
Assistant Commissioner for Patents
Washington, D.C. 20231

PETITION UNDER 37 C.F.R. § 1.97(d)(2)

Sir:

In view of the allowed status of the above-referenced application, pursuant to 37 C.F.R. § 1.97(d)(2), Applicants hereby request consideration of the accompanying Information Disclosure Statement. Enclosed is a check (Check No. 1461) for $130.00 for the petition fee under 37 C.F.R. § 1.17(i). This Petition is being submitted in duplicate.

I hereby certify that this correspondence is being deposited with the United States Postal Service as first class mail in an envelope addressed to: Assistant Commissioner for Patents, Washington, D.C. 20231, on September 7, 1999.

9-7-99 David R. Graham
Date Signature

Respectfully submitted,

David R. Graham

David R. Graham
Reg. No. 36,150
Attorney for Applicants

B1#

#11

IN THE UNITED STATES PATENT AND TRADEMARK OFFICE

OIPE JC900 SEP 13 1999 PATENT & TRADEMARK OFFICE
RECEIVED DEC 07 1999 Group 2700

Applicants: William P. Bialick et al.

Assignee: Spyrus, Inc.

Title: Peripheral Device With Integrated Security Functionality

Serial No.: 08/869,305 Filed: June 4, 1997

Examiner: L. Hua Group Art Unit: 2785

Batch No.: U04 Allowed: June 7, 1999

Attorney Docket No.: SPY-004

Milpitas, California
September 7, 1999

RECEIVED SEP 15 1999 Publishing Division 13

Box Issue Fee
Assistant Commissioner for Patents
Washington, D.C. 20231

INFORMATION DISCLOSURE STATEMENT
WITH CERTIFICATION UNDER 37 C.F.R. §1.97(e)(2)

Sir:

Pursuant to 37 C.F.R. § 1.56, § 1.97 and § 1.98, Applicants bring the documents (copies enclosed) listed on the enclosed Form PTO-1449 to the Examiner's attention in the above-identified application. Citation of these documents shall not be construed as an admission that the documents are necessarily prior art with respect to the instant invention. Also, citation of these documents shall not be construed as an admission that the information disclosed therein is, or is considered to be, material to patentability as defined in 37 C.F.R. § 1.56(b).

The undersigned hereby certifies in accordance with 37 CFR §1.97(e)(2) that no item of information contained in this information disclosure statement was cited in a communication

09/14/1999 MSHIFER1 00000107 08869305 130.00 OP
01 FC:122

from a foreign patent office in a counterpart foreign application or, to the knowledge of the person signing the certification after making reasonable inquiry, was known to any individual designated in §1.56(c) more than three months prior to the filing of this information disclosure statement, except for U.S. Patent No. 4,709,136 to Watanabe.

I hereby certify that this correspondence is being deposited with the United States Postal Service as first class mail in an envelope addressed to: Assistant Commissioner for Patents, Washington, D.C. 20231, on September 7, 1999.

9-7-99 David R. Graham
Date Signature

Respectfully submitted
and certified by,

David R. Graham

David R. Graham
Reg. No. 36,150
Attorney for Applicants

U.S. DEPT OF COMMERCE - PATENT A , TRADEMARK OFFICE INFORMATION DISCLOSURE CITATION (Use several sheets if necessary)	ATTORNEY DOCKET NO.: SPY-004	SERIAL NO.: 08/869,305
	APPLICANTS: William P. Bialick et al.	
	FILING DATE: June 4, 1997	GROUP ART UNIT: 2785

U.S. PATENTS

EXAMINER'S INITIALS	PATENT NUMBER	ISSUE DATE	INVENTOR(S)	CLASS	SUB-CLASS	FILING DATE
LVH	4,709,136	11/24/87	Watanabe	235	379	06/03/86
LVH	5,878,142	3/2/99	Caputo et al.	380	25	6/10/96
LVH	5,790,674	8/4/98	Houvener et al.	380	23	7/19/96
LVH	5,610,981	3/11/97	Mooney et al.	380	25	2/28/95
LVH	5,524,134	6/4/96	Gustafson et al.	379	58	4/28/94
LVH	5,828,832	10/27/98	Holden et al.	395	187.01	7/30/96
LVH	5,640,302	6/17/97	Kikinis	361	687	3/11/96

OIPE JC90 SEP 13 1999 PATENT & TRADEMARK OFFICE

RECEIVED
DEC 07 1999
Group 2700

FOREIGN PATENT DOCUMENTS

EXAMINER'S INITIALS	DOCUMENT NUMBER	PUBLICATION DATE	NAME(S)	JURISDICTION	TRANSLATION? YES	TRANSLATION? NO

OTHER DOCUMENTS

EXAMINER'S INITIALS	AUTHOR(S), TITLE, PUBLICATION, DATE, PERTINENT PAGES, ETC.

EXAMINER: Ly V. Hua DATE CONSIDERED: 12/14/99

Examiner: Initial if citation considered, whether or not citation is in conformance with MPEP §609. Draw line through citation if not in conformance and not considered. Include copy of this form with next communication to the applicant.

Form PTO-1449

PART B—ISSUE FEE TRANSMITTAL

Complete and mail this form, together with applicable fees, to: **Box ISSUE FEE**
Assistant Commissioner for Patents
Washington, D.C. 20231

OIPE JC73 SEP 14 1999 PATENT & TRADEMARK OFFICE

MAILING INSTRUCTIONS: This form should be used for transmitting the ISSUE FEE. Blocks 1 through 4 should be completed where appropriate. All further correspondence including the Issue Fee Receipt, the Patent, advance orders and notification of maintenance fees will be mailed to the current correspondence address as indicated unless corrected below or directed otherwise in Block 1, by (a) specifying a new correspondence address; and/or (b) indicating a separate "FEE ADDRESS" for maintenance fee notifications.

CURRENT CORRESPONDENCE ADDRESS (Note: Legibly mark-up with any corrections or use Block 1)

LM21/0607
DAVID R GRAHAM
1337 CHEWPON AVENUE
MILPITAS CA 95035

Note: The certificate of mailing below can only be used for domestic mailings of the Issue Fee Transmittal. This certificate cannot be used for any other accompanying papers. Each additional paper, such as an assignment or formal drawing, must have its own certificate of mailing.

Certificate of Mailing

I hereby certify that this Issue Fee Transmittal is being deposited with the United States Postal Service with sufficient postage for first class mail in an envelope addressed to the Box Issue Fee address above on the date indicated below.

David R. Graham (Depositor's name)
David R. Graham (Signature)
September 7, 1999 (Date)

APPLICATION NO.	FILING DATE	TOTAL CLAIMS	EXAMINER AND GROUP ART UNIT	DATE MAILED
08/869,305	06/04/97	039	HUA, L 2785	06/07/99

First Named Applicant: BIALICK, 35 USC 154(b) term ext. = 0 Days.

TITLE OF INVENTION: PERIPHERAL DEVICE WITH INTEGRATED SECURITY FUNCTIONALITY

ATTY'S DOCKET NO.	CLASS-SUBCLASS	BATCH NO.	APPLN. TYPE	SMALL ENTITY	FEE DUE	DATE DUE
2 SPY-004	713-200.000	U04	UTILITY	YES	$605.00	09/07/99

1. Change of correspondence address or indication of " Fee Address" (37 CFR 1.363). Use of PTO form(s) and Customer Number are recommended, but not required.
   - ☐ Change of correspondence address (or Change of Correspondence Address form PTO/SB/122) attached.
   - ☐ "Fee Address" indication (or "Fee Address" Indication form PTO/SB/47) attached.

2. For printing on the patent front page, list (1) the names of up to 3 registered patent attorneys or agents OR, alternatively, (2) the name of a single firm (having as a member a registered attorney or agent) and the names of up to 2 registered patent attorneys or agents. If no name is listed, no name will be printed.
   1 David R.Graham
   2 _____
   3 _____

3. ASSIGNEE NAME AND RESIDENCE DATA TO BE PRINTED ON THE PATENT (print or type)
   PLEASE NOTE: Unless an assignee is identified below, no assignee data will appear on the patent. Inclusion of assignee data is only appropiate when an assignment has been previously submitted to the PTO or is being submitted under separate cover. Completion of this form is NOT a subsitiute for filing an assignment.
   (A) NAME OF ASSIGNEE Spyrus, Inc.
   (B) RESIDENCE: (CITY & STATE OR COUNTRY) Santa Clara, California
   Please check the appropriate assignee category indicated below (will not be printed on the patent)
   ☐ individual ☒ corporation or other private group entity ☐ government

4a. The following fees are enclosed (make check payable to Commissioner of Patents and Trademarks):
   ☒ Issue Fee
   ☒ Advance Order - # of Copies 10

4b. The following fees or deficiency in these fees should be charged to:
   DEPOSIT ACCOUNT NUMBER 50-0840
   (ENCLOSE AN EXTRA COPY OF THIS FORM)
   ☐ Issue Fee
   ☐ Advance Order - # of Copies _____

The COMMISSIONER OF PATENTS AND TRADEMARKS IS requested to apply the Issue Fee to the application identified above.

(Authorized Signature) David R. Graham (Date) 9-7-99

NOTE; The Issue Fee will not be accepted from anyone other than the applicant; a registered attorney or agent; or the assignee or other party in interest as shown by the records of the Patent and Trademark Office.

Burden Hour Statement: This form is estimated to take 0.2 hours to complete. Time will vary depending on the needs of the individual case. Any comments on the amount of time required to complete this form should be sent to the Chief Information Officer, Patent and Trademark Office, Washington, D.C. 20231. DO NOT SEND FEES OR COMPLETED FORMS TO THIS ADDRESS. SEND FEES AND THIS FORM TO: Box Issue Fee, Assistant Commissioner for Patents, Washington D.C. 20231

Under the Paperwork Reduction Act of 1995, no persons are required to respond to a collection of information unless it displays a valid OMB control number.

RECEIVED
SEP 17 1999
Publishing Division
Corres/Allowed Files

09/15/1999 TTRAN2 00000159 08869305
01 FC:242 605.00 DP
02 FC:561 30.00 DP

TRANSMIT THIS FORM WITH FEE

PART B—ISSUE FEE TRANSMI

Complete and mail this form, together with applicable fees, to: **Box ISSUE FEE**
Assistant Commissioner for Patents
Washington, D.C. 20231

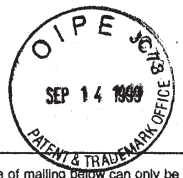

MAILING INSTRUCTIONS: This form should be used for transmitting the ISSUE FEE. Blocks 1 through 4 should be completed where appropriate. All further correspondence including the Issue Fee Receipt, the Patent, advance orders and notification of maintenance fees will be mailed to the current correspondence address as indicated unless corrected below or directed otherwise in Block 1, by (a) specifying a new correspondence address; and/or (b) indicating a separate "FEE ADDRESS" for maintenance fee notifications.

CURRENT CORRESPONDENCE ADDRESS (Note: Legibly mark-up with any corrections or use Block 1)

LM21/0607

DAVID R GRAHAM
1337 CHEWPON AVENUE
MILPITAS CA 95035

Note: The certificate of mailing below can only be used for domestic mailings of the Issue Fee Transmittal. This certificate cannot be used for any other accompanying papers. Each additional paper, such as an assignment or formal drawing, must have its own certificate of mailing.

Certificate of Mailing

I hereby certify that this Issue Fee Transmittal is being deposited with the United States Postal Service with sufficient postage for first class mail in an envelope addressed to the Box Issue Fee address above on the date indicated below.

David R. Graham (Depositor's name)
David R. Graham (Signature)
September 7, 1999 (Date)

APPLICATION NO.	FILING DATE	TOTAL CLAIMS	EXAMINER AND GROUP ART UNIT	DATE MAILED
08/869,305	06/04/97	039	HUA, L 2785	06/07/99

First Named Applicant: BIALICK. 35 USC 154(b) term ext. = 0 Days.

TITLE OF INVENTION: PERIPHERAL DEVICE WITH INTEGRATED SECURITY FUNCTIONALITY

ATTY'S DOCKET NO.	CLASS-SUBCLASS	BATCH NO.	APPLN. TYPE	SMALL ENTITY	FEE DUE	DATE DUE
2 SPY-004	713-200.000	U04	UTILITY	YES	$605.00	09/07/99

1. Change of correspondence address or indication of " Fee Address" (37 CFR 1.363). Use of PTO form(s) and Customer Number are recommended, but not required.
   - ☐ Change of correspondence address (or Change of Correspondence Address form PTO/SB/122) attached.
   - ☐ "Fee Address" indication (or "Fee Address" Indication form PTO/SB/47) attached.

2. For printing on the patent front page, list (1) the names of up to 3 registered patent attorneys or agents OR, alternatively, (2) the name of a single firm (having as a member a registered attorney or agent) and the names of up to 2 registered patent attorneys or agents. If no name is listed, no name will be printed.
   1 David R.Graham
   2 _____
   3 _____

3. ASSIGNEE NAME AND RESIDENCE DATA TO BE PRINTED ON THE PATENT (print or type)
   PLEASE NOTE: Unless an assignee is identified below, no assignee data will appear on the patent. Inclusion of assignee data is only appropiate when an assignment has been previously submitted to the PTO or is being submitted under separate cover. Completion of this form is NOT a subsititue for filing an assignment.
   (A) NAME OF ASSIGNEE Spyrus, Inc.
   (B) RESIDENCE: (CITY & STATE OR COUNTRY) Santa Clara, California
   Please check the appropriate assignee category indicated below (will not be printed on the patent)
   ☐ individual ☒ corporation or other private group entity ☐ government

4a. The following fees are enclosed (make check payable to Commissioner of Patents and Trademarks):
   - ☒ Issue Fee
   - ☒ Advance Order - # of Copies 10

4b. The following fees or deficiency in these fees should be charged to:
   DEPOSIT ACCOUNT NUMBER 50-0840
   (ENCLOSE AN EXTRA COPY OF THIS FORM)
   - ☐ Issue Fee
   - ☐ Advance Order - # of Copies _____

The COMMISSIONER OF PATENTS AND TRADEMARKS IS requested to apply the Issue Fee to the application identified above.

(Authorized Signature) David R. Graham (Date) 9-7-99

NOTE; The Issue Fee will not be accepted from anyone other than the applicant; a registered attorney or agent; or the assignee or other party in interest as shown by the records of the Patent and Trademark Office.

Burden Hour Statement: This form is estimated to take 0.2 hours to complete. Time will vary depending on the needs of the individual case. Any comments on the amount of time required to complete this form should be sent to the Chief Information Officer, Patent and Trademark Office, Washington, D.C. 20231. DO NOT SEND FEES OR COMPLETED FORMS TO THIS ADDRESS. SEND FEES AND THIS FORM TO: Box Issue Fee, Assistant Commissioner for Patents, Washington D.C. 20231

Under the Paperwork Reduction Act of 1995, no persons are required to respond to a collection of information unless it displays a valid OMB control number.

RECEIVED
SEP 17 1999
Publishing Division
Corres/Allowed Files (07

TRANSMIT THIS FORM WITH FEE

UNITED STATES DEPARTMENT OF COMMERCE
Patent and Trademark Office
Address: COMMISSIONER OF PATENTS AND TRADEMARKS
Washington, D.C. 20231

APPLICATION NO.	FILING DATE	FIRST NAMED INVENTOR	ATTORNEY DOCKET NO.
08/869,305	06/04/97	BIALICK W	SPY-004

LM21/1216

DAVID R GRAHAM
1337 CHEWPON AVENUE
MILPITAS CA 95035

EXAMINER	
HUA, L	
ART UNIT	**PAPER NUMBER**
2785	12

DATE MAILED: 12/16/99

Please find below and/or attached an Office communication concerning this application or proceeding.

Commissioner of Patents and Trademarks

PTO-90C (Rev. 2/95)

1- File Copy

08/869,305

UNITED STATES DEPARTMENT OF COMMERCE
Patent and Trademark Office
Address: COMMISSIONER OF PATENTS AND TRADEMARKS
Washington, D.C. 20231

APPLICATION NO.	FILING DATE	FIRST NAMED INVENTOR	ATTORNEY DOCKET NO.
08/869,305	06/04/97	BIALICK W	SFY-004

LM21/1216

DAVID R GRAHAM
1337 CHEWPON AVENUE
MILPITAS CA 95035

EXAMINER
HUA, L

ART UNIT	PAPER NUMBER
2785	12

DATE MAILED: 12/16/99

Please find below and/or attached an Office communication concerning this application or proceeding.

Commissioner of Patents and Trademarks

The Examiner hereby informs the Applicant(s) that the Information Disclosure Statement Under 37 C.F.R. 1.97(c) (1) filed on September 13, 1999, has been received, (i) matched up with its associated Application No. 08/869,305 after the Notice of Allowance (mailed on June 7, 1999, and (ii) entered. The references have been considered by the Examiner as indicated in the copy of initialed Form PTO-1449 attached herewith.

Attachement: **Form PTO-1449**

Ly V. Hua
Patent Examiner
Art Unit 2785

L. Hua
December 14, 1999

PTO-90C (Rev. 2/95)

1- File Copy

This file wrapper was thoroughly reviewed by our technical staff. There is no paper # **13** listed on the table of contents of the file wrapper. The paper has been **voided**.

This has been brought to your attention so that you will know it has not been overlooked.

This file wrapper was thoroughly reviewed by our technical staff. There is no paper # **14** listed on the table of contents of the file wrapper. The paper has been **voided**.

This has been brought to your attention so that you will know it has not been overlooked.

The file was thoroughly reviewed by our staff. Paper # 15 is missing in this file.

This has been brought to your attention so that you will know it has not been overlooked.

The file was thoroughly reviewed by our staff. Correspondence Address Change dated 06/25/2008 is missing in this file.

This has been brought to your attention so that you will know it has not been overlooked.

Electronic Acknowledgement Receipt	
EFS ID:	21563316
Application Number:	08869305
International Application Number:	
Confirmation Number:	5587
Title of Invention:	PERIPHERAL DEVICE WITH INTEGRATED SECURITY FUNCTIONALITY
First Named Inventor/Applicant Name:	WILLIAM P. BIALICK
Customer Number:	23676
Filer:	Robert Rose
Filer Authorized By:	
Attorney Docket Number:	18835
Receipt Date:	21-FEB-2015
Filing Date:	04-JUN-1997
Time Stamp:	15:22:00
Application Type:	Utility under 35 USC 111(a)

Payment information:

Submitted with Payment	no

File Listing:

Document Number	Document Description	File Name	File Size(Bytes)/ Message Digest	Multi Part /.zip	Pages (if appl.)
1	Assignee showing of ownership per 37 CFR 3.73.	373-6088802.pdf	1224058 43a925d4522ebef618113b2d070fdd0a12267fd59	no	1
Warnings:					
Information:					

2	Power of Attorney	SPEX-SB80.pdf	902057 bafb837024dda0592e2767f220b33bdc7463ed4f	no	1

Warnings:	
Information:	
Total Files Size (in bytes):	2126115

This Acknowledgement Receipt evidences receipt on the noted date by the USPTO of the indicated documents, characterized by the applicant, and including page counts, where applicable. It serves as evidence of receipt similar to a Post Card, as described in MPEP 503.

<u>New Applications Under 35 U.S.C. 111</u>
If a new application is being filed and the application includes the necessary components for a filing date (see 37 CFR 1.53(b)-(d) and MPEP 506), a Filing Receipt (37 CFR 1.54) will be issued in due course and the date shown on this Acknowledgement Receipt will establish the filing date of the application.

<u>National Stage of an International Application under 35 U.S.C. 371</u>
If a timely submission to enter the national stage of an international application is compliant with the conditions of 35 U.S.C. 371 and other applicable requirements a Form PCT/DO/EO/903 indicating acceptance of the application as a national stage submission under 35 U.S.C. 371 will be issued in addition to the Filing Receipt, in due course.

<u>New International Application Filed with the USPTO as a Receiving Office</u>
If a new international application is being filed and the international application includes the necessary components for an international filing date (see PCT Article 11 and MPEP 1810), a Notification of the International Application Number and of the International Filing Date (Form PCT/RO/105) will be issued in due course, subject to prescriptions concerning national security, and the date shown on this Acknowledgement Receipt will establish the international filing date of the application.

PTO/SB/80 (11-08)
Approved for use through 11/30/2011. OMB 0651-0035
U.S. Patent and Trademark Office; U.S. DEPARTMENT OF COMMERCE
Under the Paperwork Reduction Act of 1995, no persons are required to respond to a collection of information unless it displays a valid OMB control number.

POWER OF ATTORNEY TO PROSECUTE APPLICATIONS BEFORE THE USPTO

I hereby revoke all previous powers of attorney given in the application identified in the attached statement under 37 CFR 3.73(b).

I hereby appoint:

☑ Practitioners associated with the Customer Number: 103677

OR

☐ Practitioner(s) named below (if more than ten patent practitioners are to be named, then a customer number must be used):

Name	Registration Number	Name	Registration Number

as attorney(s) or agent(s) to represent the undersigned before the United States Patent and Trademark Office (USPTO) in connection with any and all patent applications assigned only to the undersigned according to the USPTO assignment records or assignment documents attached to this form in accordance with 37 CFR 3.73(b).

Please change the correspondence address for the application identified in the attached statement under 37 CFR 3.73(b) to:

☑ The address associated with Customer Number: 103677

OR

☐ Firm or Individual Name			
Address			
City		State	Zip
Country			
Telephone		Email	

Assignee Name and Address:

SPEX Technologies, Inc.
1860 HARTOG DRIVE
SAN JOSE CA 95131

A copy of this form, together with a statement under 37 CFR 3.73(b) (Form PTO/SB/96 or equivalent) is required to be filed in each application in which this form is used. The statement under 37 CFR 3.73(b) may be completed by one of the practitioners appointed in this form if the appointed practitioner is authorized to act on behalf of the assignee, and must identify the application in which this Power of Attorney is to be filed.

SIGNATURE of Assignee of Record

The individual whose signature and title is supplied below is authorized to act on behalf of the assignee

Signature		Date	2/19/2015
Name	Tom Hakel	Telephone	(408) 392-9131
Title	President		

This collection of information is required by 37 CFR 1.31, 1.32 and 1.33. The information is required to obtain or retain a benefit by the public which is to file (and by the USPTO to process) an application. Confidentiality is governed by 35 U.S.C. 122 and 37 CFR 1.11 and 1.14. This collection is estimated to take 3 minutes to complete, including gathering, preparing, and submitting the completed application form to the USPTO. Time will vary depending upon the individual case. Any comments on the amount of time you require to complete this form and/or suggestions for reducing this burden, should be sent to the Chief Information Officer, U.S. Patent and Trademark Office, U.S. Department of Commerce, P.O. Box 1450, Alexandria, VA 22313-1450. DO NOT SEND FEES OR COMPLETED FORMS TO THIS ADDRESS. **SEND TO: Commissioner for Patents, P.O. Box 1450, Alexandria, VA 22313-1450.**

If you need assistance in completing the form, call 1-800-PTO-9199 and select option 2.

PTO/SB/96 (07-09)
Approved for use through 07/31/2012. OMB 0651-0031
U.S. Patent and Trademark Office; U.S. DEPARTMENT OF COMMERCE
Under the Paperwork Reduction Act of 1995, no persons are required to respond to a collection of information unless it displays a valid OMB control number.

STATEMENT UNDER 37 CFR 3.73(b)

Applicant/Patent Owner: SPEX TECHNOLOGIES

Application No./Patent No.: 6088802 Filed/Issue Date: 07/11/2000

Titled: PERIPHERAL DEVICE WITH INTEGRATED SECURITY FUNCTIONALITY

SPEX Techologies, Inc. , a corporation

(Name of Assignee) (Type of Assignee, e.g., corporation, partnership, university, government agency, etc.

states that it is:

1. ☒ the assignee of the entire right, title, and interest in;

2. ☐ an assignee of less than the entire right, title, and interest in
(The extent (by percentage) of its ownership interest is _____ %); or

3. ☐ the assignee of an undivided interest in the entirety of (a complete assignment from one of the joint inventors was made)

the patent application/patent identified above, by virtue of either:

A. ☐ An assignment from the inventor(s) of the patent application/patent identified above. The assignment was recorded in the United States Patent and Trademark Office at Reel _____, Frame _____, or for which a copy therefore is attached.

OR

B. ☒ A chain of title from the inventor(s), of the patent application/patent identified above, to the current assignee as follows:

1. From: BIALICK, et al. To: Spyrus, Inc.

The document was recorded in the United States Patent and Trademark Office at
Reel 008942, Frame 0204, or for which a copy thereof is attached.

2. From: Spyrus, Inc. To: SPEX Technologies, Inc.

The document was recorded in the United States Patent and Trademark Office at
Reel 034971, Frame 0298, or for which a copy thereof is attached.

3. From: _____ To: _____

The document was recorded in the United States Patent and Trademark Office at
Reel _____, Frame _____, or for which a copy thereof is attached.

☐ Additional documents in the chain of title are listed on a supplemental sheet(s).

☐ As required by 37 CFR 3.73(b)(1)(i), the documentary evidence of the chain of title from the original owner to the assignee was, or concurrently is being, submitted for recordation pursuant to 37 CFR 3.11.

[NOTE: A separate copy (*i.e.*, a true copy of the original assignment document(s)) must be submitted to Assignment Division in accordance with 37 CFR Part 3, to record the assignment in the records of the USPTO. See MPEP 302.08]

The undersigned (whose title is supplied below) is authorized to act on behalf of the assignee.

Robert Rose 02/19/2015

Signature Date

Robert Rose Attorney of record

Printed or Typed Name Title

This collection of information is required by 37 CFR 3.73(b). The information is required to obtain or retain a benefit by the public which is to file (and by the USPTO to process) an application. Confidentiality is governed by 35 U.S.C. 122 and 37 CFR 1.11 and 1.14. This collection is estimated to take 12 minutes to complete, including gathering, preparing, and submitting the completed application form to the USPTO. Time will vary depending upon the individual case. Any comments on the amount of time you require to complete this form and/or suggestions for reducing this burden, should be sent to the Chief Information Officer, U.S. Patent and Trademark Office, U.S. Department of Commerce, P.O. Box 1450, Alexandria, VA 22313-1450. DO NOT SEND FEES OR COMPLETED FORMS TO THIS ADDRESS. **SEND TO: Commissioner for Patents, P.O. Box 1450, Alexandria, VA 22313-1450.**

If you need assistance in completing the form, call 1-800-PTO-9199 and select option 2.

PTO/SB/96 (07-09)
Approved for use through 07/31/2012. OMB 0651-0031
U.S. Patent and Trademark Office; U.S. DEPARTMENT OF COMMERCE
Under the Paperwork Reduction Act of 1995, no persons are required to respond to a collection of information unless it displays a valid OMB control number.

STATEMENT UNDER 37 CFR 3.73(b)

Applicant/Patent Owner: SPEX TECHNOLOGIES

Application No./Patent No.: 6088802 Filed/Issue Date: 07/11/2000

Titled: PERIPHERAL DEVICE WITH INTEGRATED SECURITY FUNCTIONALITY

SPEX Techologies, Inc. , a corporation

(Name of Assignee) (Type of Assignee, e.g., corporation, partnership, university, government agency, etc.

states that it is:

1. ☒ the assignee of the entire right, title, and interest in;

2. ☐ an assignee of less than the entire right, title, and interest in
(The extent (by percentage) of its ownership interest is _____ %); or

3. ☐ the assignee of an undivided interest in the entirety of (a complete assignment from one of the joint inventors was made)

the patent application/patent identified above, by virtue of either:

A. ☐ An assignment from the inventor(s) of the patent application/patent identified above. The assignment was recorded in the United States Patent and Trademark Office at Reel _____, Frame _____, or for which a copy therefore is attached.

OR

B. ☒ A chain of title from the inventor(s), of the patent application/patent identified above, to the current assignee as follows:

1. From: BIALICK, et al. To: Spyrus, Inc.

The document was recorded in the United States Patent and Trademark Office at
Reel 008942, Frame 0204, or for which a copy thereof is attached.

2. From: Spyrus, Inc. To: SPEX Technologies, Inc.

The document was recorded in the United States Patent and Trademark Office at
Reel 034971, Frame 0298, or for which a copy thereof is attached.

3. From: _____ To: _____

The document was recorded in the United States Patent and Trademark Office at
Reel _____, Frame _____, or for which a copy thereof is attached.

☐ Additional documents in the chain of title are listed on a supplemental sheet(s).

☐ As required by 37 CFR 3.73(b)(1)(i), the documentary evidence of the chain of title from the original owner to the assignee was, or concurrently is being, submitted for recordation pursuant to 37 CFR 3.11.

[NOTE: A separate copy (*i.e.*, a true copy of the original assignment document(s)) must be submitted to Assignment Division in accordance with 37 CFR Part 3, to record the assignment in the records of the USPTO. See MPEP 302.08]

The undersigned (whose title is supplied below) is authorized to act on behalf of the assignee.

Robert Rose
Signature

02/19/2015
Date

Robert Rose
Printed or Typed Name

Attorney of record
Title

This collection of information is required by 37 CFR 3.73(b). The information is required to obtain or retain a benefit by the public which is to file (and by the USPTO to process) an application. Confidentiality is governed by 35 U.S.C. 122 and 37 CFR 1.11 and 1.14. This collection is estimated to take 12 minutes to complete, including gathering, preparing, and submitting the completed application form to the USPTO. Time will vary depending upon the individual case. Any comments on the amount of time you require to complete this form and/or suggestions for reducing this burden, should be sent to the Chief Information Officer, U.S. Patent and Trademark Office, U.S. Department of Commerce, P.O. Box 1450, Alexandria, VA 22313-1450. DO NOT SEND FEES OR COMPLETED FORMS TO THIS ADDRESS. **SEND TO: Commissioner for Patents, P.O. Box 1450, Alexandria, VA 22313-1450.**

If you need assistance in completing the form, call 1-800-PTO-9199 and select option 2.

UNITED STATES PATENT AND TRADEMARK OFFICE

UNITED STATES DEPARTMENT OF COMMERCE
United States Patent and Trademark Office
Address: COMMISSIONER FOR PATENTS
P.O. Box 1450
Alexandria, Virginia 22313-1450
www.uspto.gov

APPLICATION NUMBER	FILING OR 371(C) DATE	FIRST NAMED APPLICANT	ATTY. DOCKET NO./TITLE
08/869,305	06/04/1997	WILLIAM P. BIALICK	18835

CONFIRMATION NO. 5587

POWER OF ATTORNEY NOTICE

23676
Leech Tishman Fuscaldo & Lampl
Jeffrey G. Sheldon
100 Corson Street
Third Floor
PASADENA, CA 91103-3842

Date Mailed: 03/02/2015

NOTICE REGARDING CHANGE OF POWER OF ATTORNEY

This is in response to the Power of Attorney filed 02/21/2015.

- The Power of Attorney to you in this application has been revoked by the assignee who has intervened as provided by 37 CFR 3.71. Future correspondence will be mailed to the new address of record(37 CFR 1.33).

/dtvernon/

Office of Data Management, Application Assistance Unit (571) 272-4000, or (571) 272-4200, or 1-888-786-0101

AO 120 (Rev. 08/10)

TO:	REPORT ON THE FILING OR DETERMINATION OF AN ACTION REGARDING A PATENT OR TRADEMARK
Mail Stop 8 **Director of the U.S. Patent and Trademark Office** **P.O. Box 1450** **Alexandria, VA 22313-1450**	

In Compliance with 35 U.S.C. § 290 and/or 15 U.S.C. § 1116 you are hereby advised that a court action has been filed in the U.S. District Court Central District of California on the following

☐ Trademarks or ☑ Patents. (☐ the patent action involves 35 U.S.C. § 292.):

DOCKET NO.	DATE FILED	U.S. DISTRICT COURT
8:16-cv-01790	9/27/2016	Central District of California

PLAINTIFF	DEFENDANT
SPEX Technologies, Inc.	Kingston Technology Corporation, et al.

	PATENT OR TRADEMARK NO.	DATE OF PATENT OR TRADEMARK	HOLDER OF PATENT OR TRADEMARK
1	6,088,802	7/11/2000	SPEX Technologies, Inc.
2	6,003,135	12/14/1999	SPEX Technologies, Inc.
3			
4			
5			

In the above—entitled case, the following patent(s)/ trademark(s) have been included:

DATE INCLUDED	INCLUDED BY ☐ Amendment ☐ Answer ☐ Cross Bill ☐ Other Pleading	
PATENT OR TRADEMARK NO.	DATE OF PATENT OR TRADEMARK	HOLDER OF PATENT OR TRADEMARK
1		
2		
3		
4		
5		

In the above—entitled case, the following decision has been rendered or judgement issued:

DECISION/JUDGEMENT

CLERK	(BY) DEPUTY CLERK	DATE

Copy 1—Upon initiation of action, mail this copy to Director Copy 3—Upon termination of action, mail this copy to Director
Copy 2—Upon filing document adding patent(s), mail this copy to Director Copy 4—Case file copy

7 sheets

PATENT APPLICATION FEE DETERMINATION RECORD
Effective October 1, 1997

Application or Docket Number

CLAIMS AS FILED - PART I

FOR	(Column 1) NUMBER FILED	(Column 2) NUMBER EXTRA
BASIC FEE		
TOTAL CLAIMS	39 minus 20 =	* 12
INDEPENDENT CLAIMS	12 minus 3 =	* 9
MULTIPLE DEPENDENT CLAIM PRESENT		

* If the difference in column 1 is less than zero, enter "0" in column 2

SMALL ENTITY TYPE ☐ RATE	FEE	OR	OTHER THAN SMALL ENTITY RATE	FEE
	395.00	OR		790.00
x$11=		OR	x$22=	264
x41=		OR	x82=	738
+135=		OR	+270=	
TOTAL		OR	TOTAL	1792

CLAIMS AS AMENDED - PART II

AMENDMENT A

	(Column 1) CLAIMS REMAINING AFTER AMENDMENT		(Column 2) HIGHEST NUMBER PREVIOUSLY PAID FOR	(Column 3) PRESENT EXTRA
Total	* 39	Minus	** 32	= 7
Independent	* 8	Minus	***	=
FIRST PRESENTATION OF MULTIPLE DEPENDENT CLAIM				

SMALL ENTITY RATE	ADDITIONAL FEE	OR	OTHER THAN SMALL ENTITY RATE	ADDITIONAL FEE
x$~~11~~19=	63	OR	x$22=	
x41=		OR	x82=	
+135=		OR	+270=	
TOTAL ADDIT. FEE	63	OR	TOTAL ADDIT. FEE	

AMENDMENT B

	(Column 1) CLAIMS REMAINING AFTER AMENDMENT		(Column 2) HIGHEST NUMBER PREVIOUSLY PAID FOR	(Column 3) PRESENT EXTRA
Total	* 39	Minus	**	=
Independent	* 9	Minus	*** 12	=
FIRST PRESENTATION OF MULTIPLE DEPENDENT CLAIM				

RATE	ADDITIONAL FEE	OR	RATE	ADDITIONAL FEE
x$11=		OR	x$22=	
x41=		OR	x82=	
+135=		OR	+270=	
TOTAL ADDIT. FEE		OR	TOTAL ADDIT. FEE	

AMENDMENT C

	(Column 1) CLAIMS REMAINING AFTER AMENDMENT		(Column 2) HIGHEST NUMBER PREVIOUSLY PAID FOR	(Column 3) PRESENT EXTRA
Total	*	Minus	**	=
Independent	*	Minus	***	=
FIRST PRESENTATION OF MULTIPLE DEPENDENT CLAIM				

RATE	ADDITIONAL FEE	OR	RATE	ADDITIONAL FEE
x$11=		OR	x$22=	
x41=		OR	x82=	
+135=		OR	+270=	
TOTAL ADDIT. FEE		OR	TOTAL ADDIT. FEE	

* If the entry in column 1 is less than the entry in column 2, write "0" in column 3.
** If the "Highest Number Previously Paid For" IN THIS SPACE is less than 20, enter "20."
*** If the "Highest Number Previously Paid For" IN THIS SPACE is less than 3, enter "3."
The "Highest Number Previously Paid For" (Total or Independent) is the highest number found in the appropriate box in column 1.

FORM PTO-875 (Rev. 8/97) *U.S. Government Printing Office: 1997 - 430-571/69194 Patent and Trademark Office, U.S. DEPARTMENT OF COMMERCE

RM PTO-447A
rv. 2-95)

Staple to Front of Application

U.S. DEPARTMENT OF COMMERCE
PATENT & TRADEMARK OFFICE

APPLICATION TRANSFER REQUEST

Section I. APPLICATION TRANSFER REQUEST Date 3/17/98 S.N. 8/869,305

TO: Receiving A.U. 2785 Class/sub 395/186 Examiner _____

FROM: Originating A.U. 3642 Class/Sub 380 Examiner DA Farah

REASON: No encryption claimed for 380

☐ Request for Reconsideration
(Return to Classification)

Section II. DISPOSITION BY RECEIVING A.U. Date _____ Ex'r _____

☐ **Accepted (keep in receiving A.U.)**

Not Accepted ☐ Forward to _____ Classification Group

☐ Return to Originating A.U. _____ Nonclassification issue only:

REASON:

☐ Restriction
☐ Other

Section III. DISPOSITION BY _____ Classification Group. Date _____

☐ Transfer Approved-Forward to A.U. _____ Class/sub _____ Classifier _____

☐ Transfer Disapproved-Forward to Originating A.U. _____ Concurring Classifier _____

REASON:

Nonclassification issue raised: ☐ Restriction ☐ Other

★ U.S. GPO: 1996-420-308

L1	1448	S	(SECURITY OR SECURE OR SMART)(W) (CARD OR MEMORY)
L2	112608	S	(TARGET OR BIOMETRIC)
L3	122826	S	RETIN? OR FINGERPRINT# OR L2
L4	153764	S	VOICE OR VOCAL OR L3
L5	129	S	L4 (P) L1
L6	1175542	S	(CARD OR DEVICE OR PERIPHERAL)
L7	123	S	L6 (P) L5
L8	10	S	L7 AND 395/CLAS
L9	49	S	SECUR?/TI,AB,CLM AND L7
L10	6	S	L9 AND 395/18?/CCLS
L11	29	S	L9 AND 380/CLAS
L12	3	S	MEMORY CA

```
L1          1448 S (SECURITY OR SECURE OR SMART)(W) (CARD OR MEMORY)
L2        112608 S (TARGET OR BIOMETRIC)
L3        122826 S RETIN? OR FINGERPRINT# OR L2
L4        153764 S VOICE OR VOCAL OR L3
L5           129 S L4 (P) L1
L6       1175542 S (CARD OR DEVICE OR PERIPHERAL)
L7           123 S L6 (P) L5
L8            10 S L7 AND 395/CLAS
L9            49 S SECUR?/TI,AB,CLM AND L7
L10            6 S L9 AND 395/18?/CCLS
L11           29 S L9 AND 380/CLAS
L12            3 S MEMORY CARD (P) L7
L13         6406 S (DATA OR SMART OR PCMCIA) (W) (CARD# OR PAD OR CHIP OR D
EVI
L14         4080 S L13 (P) L6
L15          110 S L14 (P) L5
L16           12 S HOST (P) L15
```

```
L1          1005 S 380/25/CCLS
L2           922 S FPGA
L3             2 S L1 AND L2
L4            15 S L2 AND 380/CLAS
L5             6 S PROGRAMMED (P) L4
L6           157 S (MODE OR ASSUME) (P) L2
L7            16 S HOST (P) L6
L8             4 S (TARGET OR SECURITY) (P) L6
L9          1261 S HOST (P) (CPU OR MICROPROCESS? OR SECURITY OR ENCRYPT?)
(P)
L10            1 S L2 (P) L9
L11            0 S MEDIATING (P) L2
L12            0 S MEDIATE (P) L2
L13         7804 S ((PERIPHERAL OR SOURCE OR MEMORY) (P) (SECURITY OR ENCRY
PT?
L14            5 S L13 (P) L2
L15           71 S L9 (P) L13
L16            0 S L6 (P) L15
L17           19 S L15 AND 380/25/CCLS
L18           16 S CARD (P) L15
L19            7 S L17 AND L18
L20           10 S L18 AND 380/CLAS
```

3. 5,815,407, Sep. 29, 1998, Method and device for inhibiting the operation of an electronic device during take-off and landing of an aircraft; James R. Huffman, et al., 244/76R, 183, 191; 340/945, 959, 960, 971; 395/182.12, **182.2, 182.22, 750.02, 750.03;** **701/5**, 9, 14, 15, 16 [IMAGE AVAILABLE]

US PAT NO: 5,815,407 [IMAGE AVAILABLE] L8: 3 of 10
US-CL-CURRENT: 244/76R, 183, 191; 340/945, 959, 960, 971; 395/182.12, **182.2, 182.22, 750.02, 750.03;** **701/5**, 9, 14, 15, 16

DETDESC:

DETD(29)

The **voice** synthesizer 162 is either permanently integrated in the electronic book or is a removable accessory. To facilitate removability, the **voice** synthesizer 162 can be embodied within a **smart card**, or a PCMCIA **card** for reception by the interface 150. Alternatively, the **voice** synthesizer 162 can communicate with the processor 152 via an accessory interface bus 163. In a similar manner, the RF modem 160 and/or the second touchscreen 132 can communicate with the processor 152 via the accessory interface bus 163.

US PAT NO: 5,532,463 [IMAGE AVAILABLE] L3: 3 of 4
US-CL-CURRENT: 235/380; 395/186

ABSTRACT:
Process and **memory card** (1) for making **secure** the writing of sensitive data into the EEPROM data storage memory (2) of the card, consisting, during

11. 5,406,619, Apr. 11, 1995, Universal authentication device for use over telephone lines; Akhteruzzaman, et al., 379/93.02; 235/380, 382; 340/825.34; 379/144; 380/23, 28 [IMAGE AVAILABLE]

US PAT NO: 5,406,619 [IMAGE AVAILABLE] L16: 11 of 12

DETDESC:

DETD(12)

The UA being proposed also differs from the various kinds of **smart cards** already available. **Smart cards** are typically used in financial service transactions but can also be used in a number of areas. (Chaum, D., Schaumuller-Bichl, I. (Ed.) **SMART CARD** 2000: The Future of IC Cards. North-Holland, 1989.) (McCrindle, J. **Smart Cards**, IFS Ltd. (Springer-Verlag) 1990.) (Bright, R. **SMART CARDS**: Principles, Practice, Applications. Ellis Horwood Ltd. (John Wiley distrib.) 1988.) **Smart cards** are usually equipped with a microprocessor and an adequate amount of memory and can do a **host** of tasks such as authentication and recording of transactions as well as recall of past transactions etc. However, **smart cards** (whether of the contact variety or contactless variety) require a special reader station for power and communication with the remote system (banking etc.). Even the so-called "active cards" which have sealed-in batteries require a reader station or at least a data interface in order to communicate directly with a remote system. The UA on the other hand can operate over any ordinary **voice** phone primarily because of the embedded tone detector and tone generator equipment.

US PAT NO: 5,606,420 [IMAGE AVAILABLE] L5: 2 of 6

DETDESC:

DETD(4)

On an upper face of the camera main body 1 are provided various kinds of operable members as follows. An operation **mode** changeover switch 8 is adapted for changing one operation **mode** to another among the following four **modes**. "OFF" **mode**, "RECORD" **mode**, "REPRODUCTION" **mode** and "PRINT" **mode**. A **protect** switch 9 is adapted for preventing already stored images from being inadvertently erased by an operator. A multi-image output switch 10 is adapted for outputting a plurality of stored images as one multi-image. A flash **mode** changeover switch 11 is adapted for changing one flash **mode** to another among the following three **modes**, "non-flash (OFF) **mode**," "automatic flash (AUTO) **mode**," "forcible flash (ON) **mode**." A date setting switch 12 is adapted for allowing a state where a photographing date can be set. A photographing **mode** changeover switch 13 is adapting for changing a photographing **mode** from one photographing **mode** to another among the following three **modes**. "SINGLE" **mode**. "SELF-TIMER" **mode** and "CONTINUOUS" **mode** each time it is turned on. "SINGLE" **mode** is a photographing **mode** in which a single frame of photograph is obtained each time the release start button 7 is pressed. "SELF-TIMER" **mode** is a photographing **mode** in which the photographing operation is executed with the use of a self-timer. "CONTINUOUS" **mode** is a photographing **mode** in which a plurality of frames of photographs are continuously obtained at a predetermined speed while the release start button. . . is adapted for reversing (DOWN) the stored images one by one each time it is turned on. A macro/binary photographing **mode** changeover switch 16 is slidable in a lateral direction of the camera and adapted for changing from a macrophotographing **mode** to a binary photographing **mode**, and vice versa by being slid. An indicator 17 comprises, for example, a liquid crystal display (LCD), and is adapted for displaying a date. a frame number in a photographing or printing operation, and other set **modes** thereon. A **memory card** inlet 18 is formed in the shape of a slit, and adapted for inserting an external storage medium (hereinafter referred to as a **memory card**) to the camera main body 1 therethrough. Television (TV) output terminals 19 are provided in specified positions on a front. . .

=>

1. 5,696,970, Dec. 9, 1997, Architecture for implementing PCMCIA card services under the windows operating system in enhanced mode; David A. Sandage, et al., 395/681, 282, 682, 685, 710, 828, 833 [IMAGE AVAILABLE]

US PAT NO: 5,696,970 [IMAGE AVAILABLE] L5: 1 of 6

DETDESC:

DETD(38)

To . . . (For a list of the Card Services functions, see PC Card Services Interface Specification, Release 2.00, September 1992, Personal Computer **Memory Card** International Association) Therefore, a Windows application that needs access to a Card Services function can simply call 601 the appropriate. . . provided in the Card Services DLL 51. More information on the C function library is provided in the copending application **"Protected Mode** C Binding for PCMCIA Card Services Interface", Serial No. 040,214, filed concurrentiy with this application. Since not every Windows application will utilize the Card Services functions in the Card Services DLL 51, a **protected mode** INT 1A software interrupt interface into Card Services is also provided by the present invention. The INT 1A interface into. . .

3. 5,590,306, Dec. 31, 1996, Memory card management system for writing data with usage and recording codes made significant; Mikio Watanabe, et al., 711/115; 348/233; 364/DIG.1; 711/100, 103, 154, 165 [IMAGE AVAILABLE]

US PAT NO: 5,590,306 [IMAGE AVAILABLE] L5: 3 of 6

DETDESC:

DETD(60)

The digital electronic still camera 52, to which the above-mentioned **memory card** 801 is mounted, is a still picture photographing device, as shown in FIG. 9, which photographs a field by an. . . picking-up device 56 through an optical lens system 54 to store the image data representative of the field in a **memory card** 801. The picking-up device or image sensor 56 produces an output, which is in turn subjected to signal processing, such. . . 64. The camera 52 has a console and display 66, which receives various manual instructions such as exposure, data compression **mode** and write **protect** designations, and also indicates the state of the system to the user, such as alarm indicative of the state in. . . a control unit which not only controls the entire operations of the camera 52 but also writes data in the **memory card** 801.

5. 5,282,247, Jan. 25, 1994, Apparatus and method for providing data security in a computer system having removable memory; Peter T. McLean, et al., 380/4, 3, 23, 25 [IMAGE AVAILABLE]

US PAT NO: 5,282,247 [IMAGE AVAILABLE] L5: 5 of 6

ABSTRACT:
A computer system having a **memory card** for storing data that is capable of being removed and reinserted and also having the capability of safeguarding the data stored thereon. A password is stored on the **memory card**. The **memory card** is set in a **secure mode** to prevent unauthorized access to the data stored on the **memory card**. Once the **memory card** is set in **secure mode**, it remains in **secure mode**, even when removed from the computer system and subsequently inserted back into that or another computer system. Access to the data is permitted when the **memory card** is set in **secure mode** only if a valid password is provided to the **memory card**.

SUMMARY:

BSUM(18)

The safeguarding measure is implemented by selecting a unique password and storing it on the **memory card**. An authorized user can set the **memory card** in a **secure mode**. Once the **memory card** is set in **secure mode**, access to the data stored on the **memory card** is denied unless the valid password is provided. In other words, data cannot be read from, written to, nor erased from the **memory card** if it is in the **secure mode**, unless it is first unlocked by supplying it with a valid password. The **memory card** remains in **secure mode**, even when removed from the computer system and subsequently inserted back into the same or a different computer system. Once the **memory card** is set in a **secure mode**, it can be set back in a non-**secure mode** only if a valid password is provided.

SUMMARY:

BSUM(19)

The . . . the serial number of a computer system. In one embodiment of the present invention, multiple passwords are stored on the **memory card**, and a pre-determined number of passwords are required in order to unlock it. The passwords can be encoded to provide another level of security. Furthermore, the **memory card** can be designed to shut off if it is in **secure mode** and the password is not provided.

Input HTML page

```
     (FILE 'USPAT' ENTERED AT 09:25:10 ON 18 NOV 1998)
                SET PAGELENGTH 99
                SET AUHELP NONE
L1            8 S (SECURED OR PROTECTED) (W) (STORAGE OR  MEMORY) (W) (CARD O
L2            7 S MODE# AND L1
L3          354 S MEMORY CARD (P) (MODE OR MODES)
L4         3000 S ((SECUR? OR PROTECT? OR CRYPTO? OR ENCRYPT?) (2A) MODE)
L5            6 S L3 (P) L4
L6            1 S (MODE OR MODES) AND 5282247/PN

=>
```

US PAT NO: 5,771,349 [IMAGE AVAILABLE] L3: 1 of 2
US-CL-CURRENT: 395/188.01; 380/4, **25**; 395/187.01

DETDESC:

DETD(161)

Part of the high speed memory system is an arbitration circuit 838 that manages contention for the address and data ports of the memory chips that comprise the memory banks of the high speed memory system 800. The details of the arbitration circuit are not critical to the invention and can be conventional, but in the preferred embodiment, the arbitration circuit is implemented with a field programmable gate array. This **FPGA** has as outputs all the data, address and control lines of the static RAM chips in the memory system SIMM, and has as inputs all the lines of whatever number of ports are implemented in the memory system.

DETDESC:

DETD(192)

Of course, in another alternative embodiment, the functions of FIGS. 10 and 11 could all be performed by a single microprocessor. Arbitration of contention for the ports of the shared high speed memory is accomplished in the subgenus of embodiments represented by FIGS. 8-11 in the same manner as it was accomplished in the subgenus of embodiments represented by FIG. 7. Specifically, a field programmable gate array (not shown) like **FPGA** 838 in FIG. 7 can be included as part of the high speed memory system and used to monitor for contention on the address, data and control pins of the memory chips in the high speed memory and award control thereof to one of the microprocessors.

US PAT NO: 5,293,424 [IMAGE AVAILABLE] L6: 6 of 10
US-CL-CURRENT: 380/23; 235/380, 382; 380/24

SUMMARY:

BSUM(18)

According to the present invention, each memory chip is constructed to include **security control** logic circuits. In the preferred embodiment, these circuits include a non-volatile lock memory, a non-volatile lock storage enable element and a volatile access **control** memory, each being loadable under the **control** of the microprocessor. More specifically, the microprocessor first loads a lock value into the non-volatile lock memory and resets the lock storage enable element inhibiting access. Thereafter, the microprocessor loads the access **control** memory as specified by the **configuration** information. Such information is loaded only after the microprocessor has determined that the user has successfully performed a predetermined authentication procedure with a host computer. The **security** logic circuits of each memory enable the reading of information stored in selected addressed blocks of the flash memory as a function of the **configuration** information loaded into the memory chip's access **control** memory. Periodically, the user is required to successfully perform an authentication procedure with the host computer, and the user is allowed to continue reading information as allowed by the access **control** memory. In the preferred embodiment, the host computer is coupled to the memory **card** through a standard **interface** such as the **interface** which conforms to the Personal Computer Memory **Card** International Association (PCMCIA) standards.

=>

3. 4,795,898, Jan. 3, 1989, Personal memory card having a contactless interface using differential data transfer; Howard L. Bernstein, et al., 235/487, 380, 488, 492, 493 [IMAGE AVAILABLE]

US PAT NO: 4,795,898 [IMAGE AVAILABLE] L12: 3 of 3

SUMMARY:

BSUM(6)

With the advent of recent advances in microelectronics, however, it is now possible to put a vast amount of computing power and memory right in the **card** to produce a "**smart card**" or "personal **memory card**". The **card** could, therefore, carry personal identification data to virtually eliminate fraudulent use--such data as personal characteristics, driver license, social security number, personal identification numbers, and even a **voice** print. The **card** could also carry the account numbers of all of the owner's charge accounts, the balances of all of the accounts, the credit limits of all of the accounts, and other such personal data as, for example, the sizes of family members for clothing purposes, personal telephone directories, etc. The types of personal data are limited only by one's imagination.

=> d clm(1) 3

US PAT NO: 4,795,898 [IMAGE AVAILABLE] L12: 3 of 3

CLAIMS:

CLMS(1)

What is claimed is:

1. A portable data card including memory means for storing data and processor means for processing data, the data card comprising:
input/output means operably connected to the processor means for communicating with at least one reader/writer station, the processor means interpreting commands and processing data from the reader/writer station, the processor means being operably connected to and communicating with the memory means and formatting data for transfer both to the reader/writer station and to the memory means, the input/output means including capacitive coupling means for differentially transferring data from the reader/writer station to the data card and from the data card to the reader/writer station;
energy coupling means for receiving magnetic energy transmitted from the reader/writer station and for converting the magnetic energy into electric energy for energizing the memory means and the processor means; and
the capacitive coupling means and the energy coupling means providing in combination a complete communication interface between the data card and the reader/writer station.

1. 5,666,412, Sep. 9, 1997, Secure access systems and methods utilizing two access cards; Doron Handelman, et al., 380/4m; 235/382; 340/825.31; 380/6m, 16m, 20m, 21m, 25m; 395/186 [IMAGE AVAILABLE]

2. 5,623,637, Apr. 22, 1997, Encrypted data storage card including smartcard integrated circuit for storing an access password and encryption keys; Michael F. Jones, et al., 711/164; 380/23m, 25m; 395/188.01, 833; 711/103, 115 [IMAGE AVAILABLE]

3. 5,442,704, Aug. 15, 1995, Securem memorym cardm with programmed controlled securitym access control; Thomas O. Holtey, 380/23m; 235/380 [IMAGE AVAILABLE]

4. 5,426,762, Jun. 20, 1995, System for determining a truth of software in an information processing apparatus; Katsuya Nakagawa, 711/115; 364/918.7, 940, DIG.2; 380/3m [IMAGE AVAILABLE]

5. 5,293,424, Mar. 8, 1994, Securem memorym cardm; Thomas O. Holtey, et al., 380/23m; 235/380, 382; 380/24m [IMAGE AVAILABLE]

6. 5,282,247, Jan. 25, 1994, Apparatus and method for providing data security in a computer system having removable memory; Peter T. McLean, et al., 380/4m, 3m, 23m, 25m [IMAGE AVAILABLE]

7. 5,237,609, Aug. 17, 1993, Portable secure semiconductor memory device; Masatoshi Kimura, 380/3m; 235/380; 380/23m, 25m, 49m [IMAGE AVAILABLE]

8. 5,146,499, Sep. 8, 1992, Data processing system comprising authentification means viz a viz a smart card, an electronic circuit for use in such system, and a procedure for implementing such authentification; Bernard Geffrotin, 380/23m; 235/380; 380/25m [IMAGE AVAILABLE]

9. 4,864,618, Sep. 5, 1989, Automated transaction system with modular printhead having print authentication feature; Christopher B. Wright, et al., 380/51m; 340/825.34; 364/917.5, 917.7, 918, 918.1, 918.3, 918.4, 918.52, 918.7, 918.8, 929.2, 930, 930.41, 933.9, 940, 940.81, 949.71, 953, 953.3,
15:47:10 COPY AND CLEAR PAGE, PLEASE
12 NOV 1998 15:47:14 U.S. Patent & Trademark Office P0008
DIG.2; 380/23m [IMAGE AVAILABLE]

10. 4,802,218, Jan. 31, 1989, Automated transaction system; Christopher B. Wright, et al., 380/23m; 235/375, 380, 487, 492; 380/25m, 51m [IMAGE AVAILABLE]

11. 4,771,461, Sep. 13, 1988, Initialization of cryptographic variables in an EFT/POS network with a large number of terminals; Stephen M. Matyas, 380/24m, 25m, 48m [IMAGE AVAILABLE]

5. 5,754,655, May 19, 1998, System for remote purchase payment and remote bill payment transactions; Thomas S. Hughes, et al., 380/24; 235/380; 705/17; 902/24 [IMAGE AVAILABLE]

US PAT NO: 5,754,655 [IMAGE AVAILABLE] L16: 5 of 12

CLAIMS:

CLMS(1)

What is claimed is:

1. A portable terminal for allowing a user to conduct purchase and bill payment transactions with a remote host computer, the terminal comprising:
a QWERTY alphabetic keyboard for entering alphabetic information integral to the terminal;
a numeric keypad for entering numeric information integral to the terminal;
a display integral to the terminal;
a cellular phone integral to the terminal for communication with the remote **host**;
an earphone for receiving **voice** integral to the terminal and coupled to the cellular phone;
a microphone for transmitting **voice** integral to the terminal and coupled to the cellular phone;
a modem integral to the terminal coupled to the cellular phone for providing for data communication to the remote **host** computer via the cellular phone;
a slot for inserting cards integral to the terminal;
a credit/debit/**smart card** reader integral to the terminal and adjacent to the slot for reading information from credit, debit and **smart cards** inserted in the slot and for writing a new balance to a **smart card** inserted in the slot, wherein the information includes a user identifier and an issuer identifier for credit, debit and **smart cards** and in addition includes a balance for a **smart card**;
means for encrypting; and
control means integral to the terminal for operating the terminal, the control means coupled to the QWERTY alphabetic keyboard, the numeric keyboard, the display, the modem, the credit/debit/**smart card** reader, and the means for encrypting;
wherein the modem and the cellular phone communicate with the remote **host** computer to transfer the information and an entered encrypted personal identification number (PIN) to the remote **host** computer and also transfers data for a transaction, including a payee identifier, an amount of payment, and if the transaction is a purchase transaction, an item identifier, and if the transaction is a bill payment transaction, a bill identifier, and the remote **host** computer causes a debit to a credit **card** account, if the user uses a credit **card** account, a fund transfer from a debit **card** account, if the user uses a debit **card** account, and a new balance to be written on a **smart card**, if the user uses a **smart card**.

CLAIMS:

CLMS(6)

6. A method for allowing a user to conduct remote purchase and bill payment transactions with a remote **host** computer using a portable terminal including a QWERTY alphabetic keyboard for entering alphabetic information integral to the terminal, a numeric keypad for entering numeric information integral to the terminal, a display integral to the terminal, a cellular phone integral to the terminal for communication with the remote **host**, an earphone for receiving **voice** integral to the terminal and coupled to the cellular phone, a microphone for transmitting **voice** integral to the terminal and coupled to the cellular phone, a modem integral to the terminal coupled to the cellular phone for providing for data communication to the remote **host** computer via the cellular phone, a slot integral to the terminal, a credit/debit/**smart card** reader integral to the terminal and adjacent to the slot for reading information from credit, debit and **smart cards** inserted in the slot and for writing a new balance to a **smart card** inserted in the slot, means for encrypting, and control means integral to the terminal for operating the terminal, the control means coupled to the QWERTY alphabetic keyboard, the numeric keyboard, the display, the modem, the credit/debit/**smart card** reader, and the means for encrypting, the method comprising the steps of:
the user inserting into the slot a credit **card**, debit **card**, or **smart card**;
reading information from the inserted credit **card**, debit **card** or **smart card** using the credit/debit/**smart card** reader adjacent to the slot, the information including a user identifier and a issuer identifer and if a **smart card** is inserted, a balance;
the user entering a personal identification number (PIN), if the user inserts a debit **card** or **smart card**;
encrypting the entered personal identification number;
communicating with the remote **host** computer using the modem and

sending to the remote **host** computer the read information, the encrypted PIN, and [illegible] for a transaction, including a pa[illegible]e identifier, an amou[illegible]of payment, and if the transaction [illegible]a purchase transaction, an item identifier, and if the transaction is a bill payment transaction, a bill identifier; and

the remote **host** computer causing a debit to a credit **card** account, if the user uses a credit **card** account, a fund transfer from a debit **card** account, if the user uses a debit **card** account, and a new balance to be written on a **smart card**, if the user uses a **smart card**.

11. 5,406,619, Apr. 11, 1995, Universal authentication device for use over telephone lines; Akhteruzzaman, et al., 379/93.02; 235/380, 382; 340/825.34; 379/144; 380/23, 28 [IMAGE AVAILABLE]

US PAT NO: 5,406,619 [IMAGE AVAILABLE] L16: 11 of 12

DETDESC:

DETD(12)

The UA being proposed also differs from the various kinds of **smart cards** already available. **Smart cards** are typically used in financial service transactions but can also be used in a number of areas. (Chaum, D., Schaumuller-Bichl, I. (Ed.) **SMART CARD** 2000: The Future of IC Cards. North-Holland, 1989.) (McCrindle, J. **Smart Cards**, IFS Ltd. (Springer-Verlag) 1990.) (Bright, R. **SMART CARDS**: Principles, Practice, Applications. Ellis Horwood Ltd. (John Wiley distrib.) 1988.) **Smart cards** are usually equipped with a microprocessor and an adequate amount of memory and can do a **host** of tasks such as authentication and recording of transactions as well as recall of past transactions etc. However, **smart cards** (whether of the contact variety or contactless variety) require a special reader station for power and communication with the remote system (banking etc.). Even the so-called "active cards" which have sealed-in batteries require a reader station or at least a data interface in order to communicate directly with a remote system. The UA on the other hand can operate over any ordinary **voice** phone primarily because of the embedded tone detector and tone generator equipment.

2. 4,798,322, Jan. 17, 1989, Card reader/writer station for use with a personal memory card, using differential data transfer; Howard L. Bernstein, et al., 235/487, 380, 449, 451, 492 [IMAGE AVAILABLE]

US PAT NO: 4,798,322 [IMAGE AVAILABLE] L12: 2 of 3

SUMMARY:

BSUM(6)

With the advent of recent advances in microelectronics, however, it is now possible to put a vast amount of computing power and memory right in the **card** to produce a "**smart card**" or "**personal memory card**". The **card** could, therefore, carry personal identification data to virtually eliminate fraudulent use--such data as personal characteristics, driver license, social security number, personal identification numbers, and even a voice print. The **card** could also carry the account numbers of all of the owner's charge accounts, the balances of all of the accounts, the credit limits of all of the accounts, and other such personal data as, for example, the sizes of family members for clothing purchases, personal telephone directories, etc. The types of personal data are limited only by one's imagination.

4. 5,770,849, Jun. 23, 1998, Smart card device with pager and visual image display; Scott R. Novis, et al., 235/492, 487 [IMAGE AVAILABLE]

US PAT NO: 5,770,849 [IMAGE AVAILABLE] L16: 4 of 12

DETDESC:

DETD(5)

During operation of **smart card device** 10, more specifically the conducting of transactions with a **host** database, **smart card device** 10 uses cryptological calculations, making data transmissions secure. To commence operation of **smart card device**, 10 the user enters security information, such as a PIN code, which could be input as a series of unique numbers or letters in visual display 14 using controls 19, or as **biometric** information, such as a finger print or **retinal** scan. The display element 14 (previously described) when fabricated as a high resolution touch sensitive panel, is capable of not only displaying data but also acting as the **biometric** input **device** for more secure applications. When utilizing **device** 10 in a financial setting, the **smart card** CPU processes the security information and using communications transceiver 17, transmits a transaction packet, dependent upon user input, to a **host** financial database. The transaction packet once received by the **host** database is verified and processed by the **host** database, transmitting confirmation back to **smart card device** 10, which subsequently records the information on **smart card** 13 and provides a visual image thereof. There is provided as a part of electronics 16 a central processing unit (CPU), such as a portable consumer computer **device**, which serves as the heart of the system. The transmission of information from **smart card device** 10 to the **host** database utilizes wireless technology, more specifically communications transceiver 17, such as a two-way pager **device**, capable of transmitting and receiving the information utilized during the transaction. There is provided within housing 11 of **smart card device** 10 a speaker/microphone 18 as part of communications transceiver 17.

DETDESC:

DETD(31)

A user interface 85 is provided to allow the user to communicate with CPU 75 and, ultimately, the **smart card**. User interface 85 includes various buttons and controls for operating visual display 14 (in this embodiment). Generally, user interface 85 includes at least an OFF/ON control and means, such as a cursor for pull-down menus, advance/reverse images, etc., to control the views being generated by visual display 14. Associated with user interface 85 is a security circuit 86 which generally will allow operation of **smart card device** 10 only in response to some secret information known only to the **smart card** owner, e.g. a PIN number, **biometric** input, some internal circuit that matches an internal circuit of the **smart card**, etc. as well as the completion of specific transactions in response to verification of security information by the **host** database. To this end, user interface 85 may include one or more buttons (generally similar to controls 19 of FIG. 1) which must be properly operated by the user to activate **smart card device** 10.

US PAT NO: 5,742,683 [IMAGE AVAILABLE] L20: 5 of 10
US-CL-CURRENT: **380/23, 3**

DETDESC:

DETD(7)

The vault is housed in a PCMCIA I/O device, or **card**, 30 which is accessed through a PCMCIA controller 32 in PC 12. A PCMCIA **card** is a credit **card** size **peripheral** or adapter that conforms to the standard specification of the personal Computer **Memory Card** International Association. Referring now to FIGS. 2 and 3, the PCMCIA **card** 30 includes a **microprocessor** 44, redundant non-volatile **memory** (NVM) 46, clock 48, an **encryption** module 50 and an accounting module 52. The vault includes an interface 56 that communicates with the **host** processor 22 through PCMCIA controller 32. The **encryption** module 50 may implement the NBS Data **Encryption** Standard (DES) or another suitable **encryption** scheme. In the preferred embodiment, **encryption** module 50 is a software module. It will be understood that **encryption** module 50 could also be a separate device, such as a separate chip connected to **microprocessor** 44. Accounting module 52 may be EEPROM that incorporates ascending and descending registers as well as postal data, such as. . .

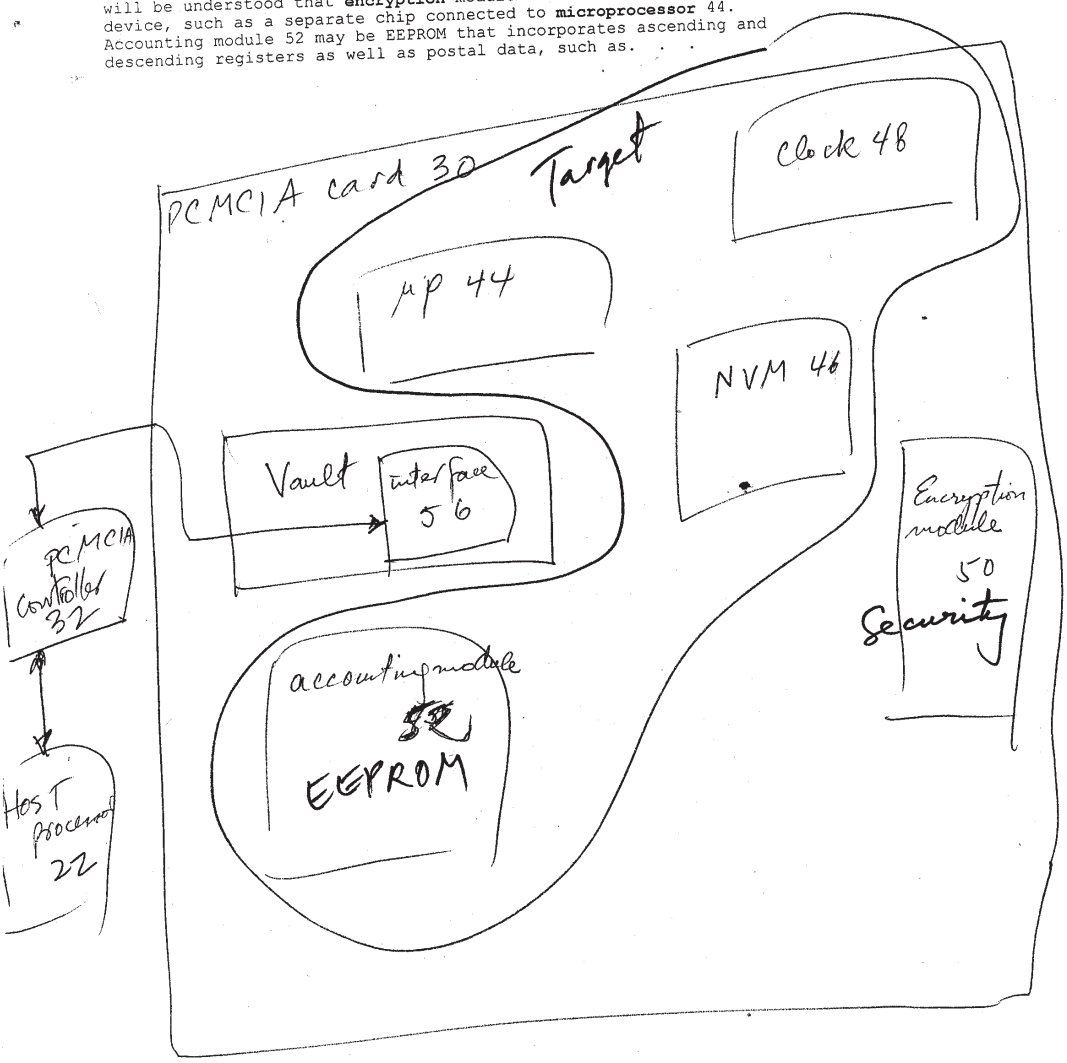

US PAT NO: 5,835,604 [IMAGE AVAILABLE] L20: 1 of 10
US-CL-CURRENT: **380/51, 23, 25, 46, 49, 55**

DETDESC:

DETD(7)

The vault is housed in a PCMCIA I/O device, or **card**, 30 which is accessed through a PCMCIA controller 32 in PC 12. A PCMCIA **card** is a credit **card** size **peripheral** or adapter that conforms to the standard specification of the personal Computer **Memory Card** International Association. Referring now to FIGS. 2 and 3, the PCMCIA **card** 30 includes a **microprocessor** 44, redundant non-volatile **memory** (NVM) 46, clock 48, an **encryption** module 50 and an accounting module 52. The vault includes an interface 56 that communicates with the **host** processor 22 through PCMCIA controller 32. The **encryption** module 50 may implement the NBS Data **Encryption** Standard (DES) or another suitable **encryption** scheme. In the preferred embodiment, **encryption** module 50 is a software module. It will be understood that **encryption** module 50 could also be a separator device, such as a separate chip connected to **microprocessor** 44. Accounting module 52 may be EEPROM that incorporates ascending and descending registers as well as postal data, such as. . . .

US PAT NO: 5,473,692 [IMAGE AVAILABLE] L20: 8 of 10
US-CL-CURRENT: **380/25, 4, 23, 30**

DETDESC:

DETD(16)

Although the hardware agent 120 is implemented as a **peripheral** device on the system bus 130 for greater **security**, it is contemplated that the hardware agent 130 could be implemented in several other ways at the PC platform level such as, for example, as a disk controller or PCMCIA **card** to automatically decrypt and/or **encrypt** information being inputted and outputted from a hard disk. Another alternative implementation would be for the hardware agent to be one component of a multi-chip module including the **host** processor as discussed below. Furthermore, even though the hardware agent is described in connection with PC platforms, it is contemplated. . . such as a fax machine, printer and the like or on a communication path between a computer and