10/219105 J1050 U.S. PTO 08/15/02

MAY 17 2005

U.S. UTILITY Patent Application

PATENT NUMBER and ISSUE DATE
6895449

APPL NUM	FILING DATE	CLASS	SUBCLASS	GAU	EXAMINER
10219105	08/15/2002	~~711~~	~~711~~ 16	~~2186~~ 2182	HAROLD KIM

**APPLICANTS: Tasler Michael;

**CONTINUING DATA VERIFIED: yes uk, 5/16/04
This application is a DIV of 09/331,002 06/14/1999

** FOREIGN APPLICATIONS VERIFIED: OC, yes uk, 5/16/04
GERMANY 19708755.8 03/04/1997
EUROPEAN PATENT OFFICE (EPO) PCT/EP98/01187 03/03/1998

PG-PUB DO NOT PUBLISH ☐ RESCIND ☐

Foreign priority claimed ☒ yes ☐ no
35 USC 119 conditions met ☒ yes ☐ no
Verified and Acknowledged Examiners's intials uk

ATTORNEY DOCKET NO
13189.129D1 (.150)

TITLE : Flexible interface for communication between a host and an analog I/O device connected to the interface regardless the type of the I/O device

U.S.DEPT. OF COMM./PAT.& TM-PTO-436L(Rev. 12-94)

4/14/05 Formal Drawings(2 shts) set 1 8/15/02

NOTICE OF ALLOWANCE MAILED		Harold Kim Assistant Examiner	CLAIMS ALLOWED	
5-20-04			Total Claims 18	Print Claim for O.G 1
ISSUE FEE			DRAWING	
Amount Due	Date Paid		Sheets Drwg.	Figs.Drwg.	Print Fig.
$665.00	8/17/04 DG	JEFFREY GAFFIN SUPERVISORY PATENT EXAMINER TECHNOLOGY CENTER 2100 Primary Examiner	2	2	2
☐ TERMINAL DISCLAIMER		PREPARED FOR ISSUE	Application Examiner 6/3/04	

WARNING: The information disclosed herein may be restricted. Unauthorized disclosure may be prohibited by the United States Code Title 35, Sections 122, 181 and 368, Possession outside the U.S. Patent & Trademark Office is restricted to authorized employees and contractors only.

ISSUE SHEET IN FILE

FILED WITH: ☐ DISK (CRF) ☐ CD-ROM
(Attached in pocket on right inside flap)

PATENT APPLICATION SERIAL NO. 10/219105

U.S. DEPARTMENT OF COMMERCE
PATENT AND TRADEMARK OFFICE
FEE RECORD SHEET

08/19/2002 WASFAW1 00000035 501848 10219105
01 FC:201 370.00 CH

PTO-1556
(5/87)

*U.S. Government Printing Office: 2001 — 481-697/59173

UNITED STATES PATENT AND TRADEMARK OFFICE

UNITED STATES DEPARTMENT OF COMMERCE
United States Patent and Trademark Office
Address: COMMISSIONER FOR PATENTS
P.O. Box 1450
Alexandria, Virginia 22313-1450
www.uspto.gov

Bib Data Sheet

CONFIRMATION NO. 6042

SERIAL NUMBER	FILING DATE	CLASS	GROUP ART UNIT	ATTORNEY DOCKET NO.
10/219,105	08/15/2002 RULE	710	2182	13189.129D1 (.150)

APPLICANTS

Michael Tasler, Wuerzburg, GERMANY;

** CONTINUING DATA **********

This application is a DIV of 09/331,002 06/14/1999 PAT 6,470,399

** FOREIGN APPLICATIONS **********

GERMANY 19708755.8 03/04/1997
EUROPEAN PATENT OFFICE (EPO) PCT/EP98/01187 03/03/1998

IF REQUIRED, FOREIGN FILING LICENSE GRANTED ** SMALL ENTITY **
** 09/18/2002

Foreign Priority claimed ☐ yes ☐ no 35 USC 119 (a-d) conditions met ☐ yes ☐ no ☐ Met after Allowance Verified and Acknowledged Examiner's Signature Initials	STATE OR COUNTRY GERMANY	SHEETS DRAWING 2	TOTAL CLAIMS 18	INDEPENDENT CLAIMS 3	

ADDRESS
22862
GLENN PATENT GROUP
3475 EDISON WAY, SUITE L
MENLO PARK , CA
94025

TITLE
FLEXIBLE INTERFACE FOR COMMUNICATION BETWEEN A HOST AND AN ANALOG I/O DEVICE CONNECTED TO THE INTERFACE REGARDLESS THE TYPE OF THE I/O DEVICE

FILING FEE RECEIVED	FEES: Authority has been given in Paper No. _____ to charge/credit DEPOSIT ACCOUNT No. _____ for following:	☐ All Fees ☐ 1.16 Fees (Filing) ☐ 1.17 Fees (Processing Ext. of time)

Please type a plus sign (+) inside this box → [+]

PTO/SB/05 (03-01)
Approved for use through 10/31/2002. OMB 0651-0032
U.S. Patent and Trademark Office: U.S. DEPARTMENT OF COMMERCE
Under the Paperwork Reduction Act of 1995, no persons are required to respond to a collection of information unless it displays a valid OMB control number.

UTILITY PATENT APPLICATION TRANSMITTAL

(Only for new nonprovisional applications under 37 C.F.R. 1.53(b))

Attorney Docket No.	13189.129D1 (.150)
First Inventor	Michael Tasler
Title	Flexible Interface For Communication Between A Host And An Analog I/O Device Connected To The Interface Regardless The Type Of The I/O Device
Express Mail Label No.	EL946142680US

APPLICATION ELEMENTS

See MPEP chapter 600 concerning utility patent application contents.

1. [X] Fee Transmittal Form (e.g., PTO/SB/17) *(Submit an original and a duplicate for fee processing)*
2. [X] Applicant claims small entity status. See 37 CFR 1.27.
3. [X] Specification [*Total Pages* 24]
   (preferred arrangement set forth below)
   - Descriptive title of the Invention
   - Cross Reference to Related Applications
   - Statement Regarding Fed sponsored R & D
   - Reference to sequence listing, a table, or a computer program listing appendix
   - Background of the Invention
   - Brief Summary of the Invention
   - Brief Description of the Drawings *(if filed)*
   - Detailed Description
   - Claim(s)
   - Abstract of the Disclosure
4. [X] Drawing(s) (*35 U.S.C.113*) [*Total Sheets* 2]
5. Oath or Declaration [*Total Pages* 3]
   a. [ ] Newly executed (original or copy)
   b. [X] Copy from a prior application (37 CFR 1.63 (d))
   (for a continuation/divisional with Box 18 completed)
   i. [ ] DELETION OF INVENTOR(S)
   Signed statement attached deleting inventor(s) named in the prior application, see 37 CFR 1.63(d)(2) and 1.33(b).
6. [X] Application Data Sheet (3 pages). See 37 CFR 1.76

ADDRESS TO: Assistant Commissioner for Patents
Box Patent Application
Washington, DC 20231

7. [ ] CD-ROM or CD-R in duplicate, large table or Computer Program *(Appendix)*
8. Nucleotide and/or Amino Acid Sequence Submission *(if applicable, all necessary)*
   a. [ ] Computer Readable Form (CRF)
   b. Specification Sequence Listing on:
      i. [ ] CD-ROM or CD-R (2 copies); or
      ii. [ ] paper
   c. [ ] Statements verifying identity of above copies

ACCOMPANYING APPLICATIONS PARTS

9. [ ] Assignment Papers (cover sheet & document(s))
10. [ ] 37 C.F.R.§3.73(b) Statement [ ] Power of Attorney *(when there is an assignee)*
11. [ ] English Translation Document *(if applicable)*
12. [ ] Information Disclosure Statement (IDS)/PTO-1449 [ ] Copies of IDS Citations
13. [X] Preliminary Amendment (9 pages)
14. [X] Return Receipt Postcard (MPEP 503) *(Should be specifically itemized)*
15. [ ] Certified Copy of Priority Document(s) *(if foreign priority is claimed)*
16. [ ] Nonpublication Request under 35 U.S.C. 122 (b)(2)(B)(i). Applicant must attach form PTO/SB/35 or its equivalent.
17. [X] Other: Express Mail Certificate (1 page)

18. If a CONTINUING APPLICATION, *check appropriate box, and supply the requisite information below and in a preliminary amendment, or in an Application Data Sheet under 37 CFR 1.76:*

[ ] Continuation [X] Divisional [ ] Continuation-in-part (CIP) of prior application No: 09 / 331,002

Prior application information: *Examiner* Du, Thuan N. *Group / Art Unit:* 2185

For CONTINUATION or DIVISIONAL APPS only: The entire disclosure of the prior application, from which an oath or declaration is supplied under Box 5b, is considered a part of the disclosure of the accompanying or divisional application and is hereby incorporated by reference. The incorporation can only be relied upon when a portion has been inadvertently omitted from the submitted application parts.

19. CORRESPONDENCE ADDRESS

[X] *Customer Number or Bar Code Label* *(Insert Customer No. or Attach bar code label here)* or [ ] *Correspondence address below*

Name	24283 PATENT TRADEMARK OFFICE		
Address			
City	*State*	*Zip Code*	
Country	*Telephone*	*Fax*	

Name (Print/Type)	Carl A. Forest	*Registration No. (Attorney/Agent)*	28,494
Signature		*Date*	8/15/02

Burden Hour Statement: This form is estimated to take 0.2 hours to complete. Time will vary depending upon the needs of the individual case. Any comments on the amount of time you are required to complete this form should be sent to the Chief Information Officer, U.S. Patent and Trademark Office, Washington, DC 20231. DO NOT SEND FEES OR COMPLETED FORMS TO THIS ADDRESS. SEND TO: Assistant Commissioner for Patents, Box Patent Application, Washington, DC 20231.

8388v1

jc687 U.S. PTO 08/15/02
J1050 U.S. PTO 10/221405 08/15/02

PTO/SB/17 (10-01)

Approved for use through 10/31/2002. OMB 0651-0032

U.S. Patent and Trademark Office; U.S. DEPARTMENT OF COMMERCE

Under the Paperwork Reduction Act of 1995, no persons are required to respond to a collection of information unless it displays a valid OMB control number.

FEE TRANSMITTAL for FY 2002

Patent fees are subject to annual revision.

☒ Applicant claims small entity status. See 37 CFR 1.27

TOTAL AMOUNT OF PAYMENT ($) 370

Complete if Known	
Application Number	Applied For
Filing Date	Herewith
First Named Inventor	Michael Tasler
Examiner Name	Du, Thuan N.
Group / Art Unit	2185
Attorney Docket No.	13189.129D1 (.150)

METHOD OF PAYMENT (check all that apply)

☐ Check ☐ Credit card ☐ Money Order ☐ Other ☐ None

☒ Deposit Account:

Deposit Account Number: 50-1848

Deposit Account Name: Patton Boggs LLP

The Commissioner is authorized to: *(check all that apply)*

☒ Charge fee(s) indicated below ☒ Credit any overpayments

☒ Charge any additional fee(s) during the pendency of this application

☐ Charge fee(s) indicated below, **except for the filing fee** to the above-identified deposit account.

FEE CALCULATION

1. BASIC FILING FEE

Large Entity Fee Code	Large Entity Fee ($)	Small Entity Fee Code	Small Entity Fee ($)	Fee Description	Fee Paid
101	740	201	370	Utility filing fee	370
106	330	206	165	Design filing fee	
107	510	207	255	Plant filing fee	
108	740	208	370	Reissue filing fee	
114	160	214	80	Provisional filing fee	

SUBTOTAL (1) ($) 370

2. EXTRA CLAIM FEES

			Extra Claims		Fee from below		Fee Paid
Total Claims	18	-20 **	0	X		=	0
Independent Claims	3	-3 **	0	X		=	0
Multiple Dependent				X		=	0

Large Entity Fee Code	Large Entity Fee ($)	Small Entity Fee Code	Small Entity Fee ($)	Fee Description
103	18	203	9	Claims in excess of 20
102	84	202	42	Independent claims in excess of 3
104	280	204	140	Multiple dependent claim, if not paid
109	84	209	42	** Reissue independent claims over original patent
110	18	210	9	** Reissue claims in excess of 20 and over original patent

SUBTOTAL (2) ($) 0

**or number previously paid, if greater; For Reissues, see above

FEE CALCULATION (continued)

3. ADDITIONAL FEES

Large Entity Fee Code	Large Entity Fee ($)	Small Entity Fee Code	Small Entity Fee ($)	Fee Description	Fee Paid
105	130	205	65	Surcharge - late filing fee or oath	
127	50	227	25	Surcharge - late provisional filing fee or cover sheet.	
139	130	139	130	Non-English specification	
147	2,520	147	2,520	For filing a request for reexamination	
112	920*	112	920*	Requesting publication of SIR prior to Examiner action	
113	1,840*	113	1,840*	Requesting publication of SIR after Examiner action	
115	110	215	55	Extension for reply within first month	
116	400	216	200	Extension for reply within second month	
117	920	217	460	Extension for reply within third month	
118	1,440	218	720	Extension for reply within fourth month	
128	1,960	228	980	Extension for reply within fifth month	
119	320	219	160	Notice of Appeal	
120	320	220	160	Filing a brief in support of an appeal	
121	280	221	140	Request for oral hearing	
138	1,510	138	1,510	Petition to institute a public use proceeding	
140	110	240	55	Petition to revive – unavoidable	
141	1,280	241	640	Petition to revive – unintentional	
142	1,280	242	640	Utility issue fee (or reissue)	
143	460	243	230	Design issue fee	
144	620	244	310	Plant issue fee	
122	130	122	130	Petitions to the Commissioner	
123	50	123	50	Processing fee under 37 CFR 1.17 (q)	
126	180	126	180	Submission of Information Disclosure Stmt	
581	40	581	40	Recording each patent assignment per property (times number of properties)	
146	740	246	370	Filing a submission after final rejection (37 CFR § 1.129(a))	
149	740	249	370	For each additional invention to be examined (37 CFR § 1.129(b))	
179	740	279	370	Request for Continued Examination (RCE)	
169	900	169	900	Request for expedited examination of a design application	

Other fee (specify) _____

*Reduced by Basic Filing Fee Paid

SUBTOTAL (3) ($) 0

SUBMITTED BY

Complete *(if applicable)*

Name (Print/Type)	Carl A. Forest	Registration No. Attorney/Agent	28,494	Telephone	303-379-1114
Signature				Date	8/15/02

WARNING: Information on this form may become public. Credit card information should not be included on this form. Provide credit card information and authorization on PTO-2038.

Burden Hour Statement: This form is estimated to take 0.2 hours to complete. Time will vary depending upon the needs of the individual case. Any comments on the amount of time you are required to complete this form should be sent to the Chief Information Officer, U.S. Patent and Trademark Office, Washington, DC 20231. DO NOT SEND FEES OR COMPLETED FORMS TO THIS ADDRESS. SEND TO: Assistant Commissioner for Patents, Washington, DC 20231.

8382v1

Application Data Sheet

Application Information

Application Type::	Divisional
Subject Matter::	Flexible Interface For Communication Between A Host And An Analog I/O Device Connected To The Interface Regardless The Type Of The I/O Device
Suggested Classification::	710
Suggested Group Art Unit::	2185
CD-ROM or CD-R ?::	No
Number of CD Disks::	N/A
Number of copies of CDs::	N/A
Sequence submission?::	N/A
Computer Readable Form (CRF)?::	N/A
Number of copies of CRF::	N/A
Title::	Flexible Interface For Communication Between A Host And An Analog I/O Device Connected To The Interface Regardless The Type Of The I/O Device
Attorney Docket Number::	13189.129D1 (.150)
Request for Early Publication?::	No
Request for Non-Publication?::	No
Suggested Drawing Figure::	FIG. 1
Total Drawing Sheets::	2 sheets
Small Entity::	Yes
Petition Included?::	Yes
Petition Type::	Preliminary Amendment
Licensed US Govt. Agency::	No
Contract or Grant Numbers::	N/A
Secrecy Order in Parent Appl.?::	No

Applicant Information

Applicant Authority type::	Inventor
Prirnary Citizenship Country::	Germany
Status::	Current
Given Name::	Michael
Middle Name::	N/A
Family Name::	Tasler
Name Suffix::	N/A
City of Residence::	Wuerzburg
State or Province of Residence::	N/A
Country of Residence::	Germany
Street of mailing address::	Cronthalstrasse 6c
City of mailing address::	Wuerzburg
State or Province of mailing address::	N/A
Country of mailing address::	Germany
Postal or Zip Code of mailing address::	D-97074

Correspondence Information

Correspondence Customer Number::	24283
Name::	Carl A. Forest
Street of mailing address::	N/A
City of mailing address::	N/A
State or Province of mailing address::	N/A
Postal or Zip Code of mailing address::	N/A
Phone Number::	303-379-1114
Fax Number::	303-379-1155
E-mail address::	CForest@pattonboggs.com

Representative Information

Representative Customer Number::	[No more than 9 digits] 24283	

Domestic Priority Information

Application::	Continuity Type::	Parent Application::	Parent Filing Date::
US	Divisional	09/331,002	June 14, 1999

Foreign Priority Information

Country::	Application No.::	Filing Date::	Priority Claimed::
Germany	19708755.8	March 4, 1997	Yes
PCT	EP98/01187	March 3, 1998	Yes

Assignee Information

Assignee name::	Labortechnik Tasler GmbH
Street of mailing address::	Cronthalstrasse 6c
City of mailing address::	Wuerzburg
State or Province of mailing address::	N/A
Country of mailing address::	Germany
Postal or Zip Code of mailing address::	97074
Recordation Date::	July 23, 2001
Reel/Frame::	012023/0515

10/ 9105 ,081502

National Phase of PCT/EP98/01187 in U.S.A.
Title: Flexible Interface
Applicant: TASLER, Michael

Translation of PCT Application PCT/EP98/01187
as originally filed

INS
A1

Flexible Interface

Description

The present invention relates to the transfer of data and in particular to interface devices for communication between a computer or host device and a data transmit/receive device from which data is to be acquired or with which two-way communication is to take place.

Existing data acquisition systems for computers are very limited in their areas of application. Generally such systems can be classified into two groups.

In the first group host devices or computer systems are attached by means of an interface to a device whose data is to be acquired. The interfaces of this group are normally standard interfaces which, with specific driver software, can be used with a variety of host systems. An advantage of such interfaces is that they are largely independent of the host device. However, a disadvantage is that they generally require very sophisticated drivers which are prone to malfunction and which limit data transfer rates between the device connected to the interface and the host device and vice versa. Further, it is often very difficult to implement such interfaces for portable systems and they offer few possibilities for adaptation with the result that such systems offer little flexibility.

The devices from which data is to be acquired cover the entire electrical engineering spectrum. In a typical case, it is assumed that a customer who operates, for example, a diagnostic radiology system in a medical engineering environment reports a fault. A field service technician of the system manufacturer visits the customer and reads system log files generated by the diagnostic radiology system by means a portable computer or laptop for example. If the fault cannot be localized or if the fault is intermittent, it will be necessary for the service technician to read not only an error log file but also data from current operation. It is apparent that in this case fast data transfer and rapid data analysis are necessary.

Another case requiring the use of an interface could be, for example, when an electronic measuring device, e.g. a multimeter, is attached to a computer system to transfer the data measured by the multimeter to the computer. Particularly when long-term measurements or large volumes of data are involved is it necessary for the interface to support a high data transfer rate.

From these randomly chosen examples it can be seen that an interface may be put to totally different uses. It is therefore desirable that an interface be sufficiently flexible to permit attachment of very different electrical or electronic systems to a host device by means of the interface. To prevent operator error, it is also desirable that a service technician is not required to operate different interfaces in different ways for different applications but that, if possible, a universal method of operating the interface be provided for a large number of applications.

To increase the data transfer rates across an interface, the route chosen in the second group of data acquisition systems for the interface devices was to specifically match the interface very closely to individual host systems or computer systems. The advantage of this solution is that high data transfer rates are possible. However, a disadvantage is that the drivers for the interfaces of the second group are very closely matched to a single host system with the result that they generally cannot be used with other host systems or their use is very ineffective. Further, such types of interface have the disadvantage that they must be installed inside the computer casing to achieve maximum data transfer rates as they access the internal host bus system. They are therefore generally not suitable for portable host systems in the form of laptops whose minimum possible size leaves little internal space to plug in an interface card.

A solution to this problem is offered by the interface devices of IOtech (business address: 25971 Cannon Road, Cleveland, Ohio 44146, USA) which are suitable for laptops such as the WaveBook/512 (registered trademark). The interface devices are connected by means of a plug-in card, approximately the size of a credit card, to the PCMCIA interface which is now a standard feature in laptops. The plug-in card converts the PCMCIA interface into an interface known in the art as IEEE 1284. The said plug-in card provides a special printer interface which is enhanced as regards the data transfer rate and delivers a data transfer rate of approximately 2 MBps as

compared with a rate of approx. 1 MBps for known printer interfaces. The known interface device generally consists of a driver component, a digital signal processor, a buffer and a hardware module which terminates in a connector to which the device whose data is to be acquired is attached. The driver component is attached directly to the enhanced printer interface thus permitting the known interface device to establish a connection between a computer and the device whose data is to be acquired.

In order to work with the said interface, an interface-specific driver must be installed on the host device so that the host device can communicate with the digital signal processor of the interface card. As described above, the driver must be installed on the host device. If the driver is a driver developed specifically for the host device, a high data transfer rate is achieved but the driver cannot be easily installed on a different host system. However, if the driver is a general driver which is as flexible as possible and which can be used on many host devices, compromises must be accepted with regard to the data transfer rate.

Particularly in an application for multi-tasking systems in which several different tasks such as data acquisition, data display and editing are to be performed quasi-simultaneously, each task is normally assigned a certain priority by the host system. A driver supporting a special task requests the central processing system of the host device for processor resources in order to perform its task. Depending on the particular priority assignment method and on the driver implementation, a particular share of processor resources is assigned to a special task in particular time slots. Conflicts arise if one or more drivers are implemented in such a way that they have the highest priority by default, i.e. they are incompatible, as happens in practice in many applications. It may occur that both drivers are set to highest priority which, in the worst case, can result in a system crash.

EP 0685799 A1 discloses an interface by means of which several peripheral devices can be attached to a bus. An interface is connected between the bus of a host device and various peripheral devices. The interface comprises a finite state machine and several branches each of which is assigned to a peripheral device. Each branch comprises a data manager, cycle control, user logic and a buffer. This known interface

device provides optimal matching between a host device and a specific peripheral device.

The specialist publication IBM Technical Disclosure Bulletin, Vol. 38, No. 05, page 245; "Communication Method between Devices through FDD Interface" discloses an interface which connects a host device to a peripheral device via a floppy disk drive interface. The interface consists in particular of an address generator, an MFM encoder/decoder, a serial/parallel adapter and a format signal generator. The interface makes it possible to attach not only a floppy disk drive but also a further peripheral device to the FDD host controller of a host device. The host device assumes that a floppy disk drive is always attached to its floppy disk drive controller and communication is initiated if the address is correct. However, this document contains no information as to how communication should be possible if the interface is connected to a multi-purpose interface instead of to a floppy disk drive controller.

It is the object of the present invention to provide an interface device for communication between a host device and a data transmit/receive device whose use is host device-independent and which delivers a high data transfer rate.

This object is achieved by an interface device according to claim 1 or 12 and by a method according to claim 15.

The present invention is based on the finding that both a high data transfer rate and host device-independent use can be achieved if a driver for an input/output device customary in a host device, normally present in most commercially available host devices, is utilized. Drivers for input/output devices customary in a host device which are found in practically all host devices are, for example, drivers for hard disks, for graphics devices or for printer devices. As however the hard disk interfaces in common host devices which can be, for example, IBM PCs, IBM-compatible PCs, Commodore PCs, Apple computers or even workstations, are the interfaces with the highest data transfer rate, the hard disk driver is utilized in the preferred embodiment of the interface device of the present invention. Drivers for other storage devices such as floppy disk drives, CD-ROM drives or tape drives could also be utilized in order to implement the interface device according to the present invention.

As described in the following, the interface device according to the present invention is to be attached to a host device by means of a multi-purpose interface of the host device which can be implemented, for example, as an SCSI interface or as an enhanced printer interface. Multi-purpose interfaces comprise both an interface card and specific driver software for the interface card. The driver software can be designed so that it can replace the BIOS driver routines. Communication between the host device and the devices attached to the multi-purpose interface then essentially takes place by means of the specific driver software for the multi-purpose interface and no longer primarily by means of BIOS routines of the host device. Recently however drivers for multi-purpose interfaces can also already be integrated in the BIOS system of the host device as, alongside classical input/output interfaces, multi-purpose interfaces are becoming increasingly common in host devices. It is of course also possible to use BIOS routines in parallel with the specific driver software for the multi-purpose interface, if this is desired.

The interface device according to the present invention comprises a processor means, a memory means, a first connecting device for interfacing the host device with the interface device, and a second connecting device for interfacing the interface device with the data transmit/receive device. The interface device is configured by the processor means and the memory means in such a way that the interface device, when receiving an inquiry from the host device via the first connecting device as to the type of a device attached to the host device, sends a signal, regardless of the type of the data transmit/receive device, to the host device via the first connecting device which signals to the host device that it is communicating with an input/output device. The interface device according to the present invention therefore simulates, both in terms of hardware and software, the way in which a conventional input/output device functions, preferably that of a hard disk drive. As support for hard disks is implemented as standard in all commercially available host systems, the simulation of a hard disk, for example, can provide host device-independent use. The interface device according to the present invention therefore no longer communicates with the host device or computer by means of a specially designed driver but by means of a program which is present in the BIOS system (Basic Input/Output System) and is normally precisely matched to the specific computer system on which it is installed,

or by means of a specific program for the multi-purpose interface. Consequently, the interface device according to the present invention combines the advantages of both groups. On the one hand, communication between the computer and the interface takes place by means of a host device-specific BIOS program or by means of a driver program which is matched to the multi-purpose interface and which could be regarded as a "device-specific driver". On the other hand, the BIOS program or a corresponding multi-purpose interface program which operates one of the common input/output interfaces in host systems is therefore present in all host systems so that the interface device according to the present invention is host device-independent.

In the following, preferred embodiments of the present invention will be explained in more detail with reference to the drawings enclosed, in which:

Fig. 1 shows a general block diagram of the interface device according to the present invention; and

Fig. 2 shows a detailed block diagram of an interface device according to a preferred embodiment of the present invention.

Fig. 1 shows a general block diagram of an interface device 10 according to the present invention. A first connecting device 12 of the interface device 10 can be attached to a host device (not shown) via a host line 11. The first connecting device is attached both to a digital signal processor 13 and to a memory means 14. The digital signal processor 13 and the memory means 14 are also attached to a second connecting device 15 by means of bi-directional communication lines (shown for all lines by means of two directional arrows). The second connecting device can be attached by means of an output line 16 to a data transmit/receive device which is to receive data from the host device or from which data is to be read, i.e. acquired, and transferred to the host device. The data transmit/receive device itself can also communicate actively with the host device via the first and second connecting device, as described in more detail in the following.

Communication between the host system or host device and the interface device is based on known standard access commands as supported by all known operating

systems (e.g. DOS, Windows, Unix). Preferably, the interface device according to the present invention simulates a hard disk with a root directory whose entries are "virtual" files which can be created for the most varied functions. When the host device system with which the interface device according to the present invention is connected is booted and a data transmit/receive device is also attached to the interface device 10, usual BIOS routines or multi-purpose interface programs issue an instruction, known by those skilled in the art as the INQUIRY instruction, to the input/output interfaces in the host device. The digital signal processor 13 receives this inquiry instruction via the first connecting device and generates a signal which is sent to the host device (not shown) again via the first connecting device 12 and the host line 11. This signal indicates to the host device that, for example, a hard disk drive is attached at the interface to which the INQUIRY instruction was sent. Optionally, the host device can send an instruction, known by those skilled in the art as "Test Unit Ready", to the interface device to request more precise details regarding the queried device.

Regardless of which data transmit/receive device at the output line 16 is attached to the second connecting device, the digital signal processor 13 informs the host device that it is communicating with a hard disk drive. If the host device receives the response that a drive is present, it then sends a request to the interface device 10 to read the boot sequence which, on actual hard disks, normally resides on the first sectors of the disk. The digital signal processor 13, whose operating system in stored in the memory means 14, responds to this instruction by sending to the host device a virtual boot sequence which, in the case of actual drives, includes the drive type, the starting position and the length of the file allocation table (FAT), the number of sectors, etc., known to those skilled in the art. Once the host device has received this data, it assumes that the interface device 10 according to a preferred embodiment of the present invention is a hard disk drive. In reply to an instruction from the host device to display the directory of the "virtual" hard disk drive simulated by the interface device 10 with respect to the host device, the digital signal processor can respond to the host device in exactly the same way as a conventional hard disk would, namely by reading on request the file allocation table or FAT on a sector specified in the boot sequence, normally the first writable sector, and transferring it to the host device, and subsequently by transferring the directory structure of the virtual hard

disk. Further, it is possible that the FAT is not read until immediately prior to reading or storing the data of the "virtual" hard disk and not already at initialization.

In a preferred embodiment of the present invention, the digital signal processor 13, which need not necessarily be implemented as a digital signal processor but may be any other kind of microprocessor, comprises a first and a second command interpreter. The first command interpreter carries out the steps described above whilst the second command interpreter carries out the read/write assignment to specific functions. If the user now wishes to read data from the data transmit/receive device via the line 16, the host device sends a command, for example "read file xy", to the interface device. As described above, the interface device appears to the host device as a hard disk. The second command interpreter of the digital signal processor now interprets the read command of the host processor as a data transfer command, by decoding whether "xy" denotes, for example, a "real-time input" file, a "configuration" file or an executable file, whereby the same begins to transfer data from the data transmit/receive device via the second connecting device to the first connecting device and via the line 11 to the host device.

Preferably, the volume of data to be acquired by a data transmit/receive device is specified in a configuration file described in the following by the user specifying in the said configuration file that a measurement is to last, for example, five minutes. To the host device the "real-time input" file then appears as a file whose length corresponds to the anticipated volume of data in those five minutes. Those skilled in the art know that communication between a processor and a hard disk consists of the processor transferring to the hard disk the numbers of the blocks or clusters or sectors whose contents it wishes to read. By reference to the FAT the processor knows which information is contained in which block. In this case, communication between the host device and the interface device according to the present invention therefore consists of the very fast transfer of block numbers and preferably of block number ranges because a virtual "real-time input" file will not be fragmented. If the host device now wants to read the "real-time input" file, it transfers a range of block numbers to the interface device, whereupon data commences to be received via the second connecting device and data commences to be sent to the host device via the first connecting device.

In addition to the digital signal processor instruction memory, which comprises the operating system of the digital signal processor and can be implemented as an EPROM or EEPROM, the memory means 14 can have an additional buffer for purposes of synchronizing data transfer from the data transmit/receive device to the interface device 10 and data transfer from the interface device 10 to the host device.

Preferably, the buffer is implemented as a fast random access memory or RAM buffer.

Further, from the host device the user can also create a configuration file, whose entries automatically set and control various functions of the interface device 10, on the interface device 10 which appears to the host device as a hard disk. These settings can be, for example, gain, multiplex or sampling rate settings. By creating and editing a configuration file, normally a text file which is simple to understand with little prior knowledge, users of the interface device 10 are able to perform essentially identical operator actions for almost any data transmit/receive devices which can be attached to the second connecting device via the line 16, thus eliminating a source of error arising from users having to know many different command codes for different applications. In the case of the interface device 10 according to the present invention it is necessary for users to note the conventions of the configuration file once only in order to be able to use the interface device 10 as an interface between a host device and almost any data transmit/receive device.

As a result of the option of storing any files in agreed formats in the memory means 14 of the interface device 10, taking into account the maximum capacity of the memory means, any enhancements or even completely new functions of the interface device 10 can be quickly implemented. Even files executable by the host device, such as batch files or executable files (BAT or EXE files), and also help files can be implemented in the interface device, thus achieving independence of the interface device 10 from any additional software (with the exception of the BIOS routines) of the host device. On the one hand, this avoids licensing and/or registration problems and, on the other hand, installation of certain routines which can be frequently used, for example an FFT routine to examine acquired time-domain data in the frequency

domain, is rendered unnecessary as the EXE files are already installed on the interface device 10 and appear in the virtual root directory, by means of which the host device can access all programs stored on the interface device 10.

In a preferred embodiment of the present invention in which the interface device 10 simulates a hard disk to the host device, the interface device is automatically detected and readied for operation when the host system is powered up or booted. This corresponds to the plug-and-play standard which is currently finding increasingly widespread use. The user is no longer responsible for installing the interface device 10 on the host device by means of specific drivers which must also be loaded; instead the interface device 10 is automatically readied for operation when the host system is booted.

For persons skilled in the art it is however obvious that the interface device 10 is not necessarily signed on when the computer system is powered up but that a special BIOS routine or a driver for a multi-purpose interface can also be started on the host device during current operation of the computer system in order to sign on or mount the interface device 10 as an additional hard disk. This embodiment is suitable for larger workstation systems which are essentially never powered down as they perform, e.g. mail functions or monitor processes which run continuously, for example, in multi-tasking environments.

In the interface device according to the present invention an enormous advantage is to be gained, as apparent in the embodiment described in the following, in separating the actual hardware required to attach the interface device 10 to the data transmit/receive device from the communication unit, which is implemented by the digital signal processor 13, the memory means 14 and the first connecting device 12, as this allows a plurality of dissimilar device types to be operated in parallel in identical manner. Accordingly, many interface devices 10 can be connected to a host device which then sees many different "virtual" hard disks. In addition, any modification of the specific hardware symbolized by the second connecting device 15 can be implemented essentially without changing the operation of the interface device according to the present invention. Further, an experienced user can intervene at any time on any level of the existing second connecting device by making use of the above mentioned

option of creating a configuration file or adding or storing new program sections for the second connecting device.

An important advantage of the interface device 10 of the present invention is that it also permits extremely high data transfer rates by using, for data interchange, the host device-own BIOS routines which are optimized for each host device by the host device manufacturer or BIOS system manufacturer, or by using driver programs which are normally optimized and included by the manufacturers of multi-purpose interfaces. Furthermore, due to the simulation of a virtual mass storage device, the data is managed and made available in such a way that it can be transferred directly to other storage media, e.g. to an actual hard disk of the host device without, as it were, intervention of the host device processor. The only limitation to long-term data transfer at high speed is therefore imposed exclusively by the speed and the size of the mass storage device of the host device. This is the case as the digital signal processor 13 already formats the data read by the data transmit/receive device via the second connecting device 15 into block sizes suitable for a hard disk of the host device, whereby the data transfer speed is limited only by the mechanical latency of the hard disk system of the host device. At this point, it should be noted that normally data flow from a host device must be formatted in blocks to permit writing to a hard disk and subsequent reading from a hard disk, as known by those skilled in the art.

The said data transfer rate can be increased further by setting up a direct memory access (DMA) or RAM drive in the host system. As those skilled in the art know, the setting up of a RAM drive requires processor resources of the host device, with the result that the advantage of writing the data to a hard disk drive of the host device essentially without the need for processor resources is lost.

As described above, a data buffer can be implemented in the memory means 14 to permit independence in terms of time of the data transmit/receive device attached to the second connecting device from the host device attached to the first connecting device. This guarantees error-free operation of the interface device 10 even for time-critical applications in multi-tasking host systems.

Fig. 2 shows a detailed block diagram of an interface device 10 according to the present invention.

A digital signal processor (DSP) 1300 is, in a manner of speaking, the heart of the interface device 10. The DSP can be any DSP but preferably has a 20-MB on-chip random access memory (RAM). Certain instruction sets, for example, can be stored in the RAM already integrated in the DSP. An 80-MHz clock generator is attached to the DSP 1300 in order to synchronize the DSP. The DSP implements a fast Fourier transformation (FFT) in real time and also optional data compression of the data to be transferred from the data transmit/receive device to the host device in order to achieve greater efficiency and to permit interoperation with host devices which have a smaller memory.

In the preferred embodiment of the interface device 10 shown in Fig. 2, the first connecting device 12 of Fig. 1 contains the following components: an SCSI interface 1220 and a 50-pin SCSI connector 1240 for attachment to an SCSI interface present on most host devices or laptops. The SCSI (small computer system interface) interface 1220 translates the data received via the SCSI connector 1240 into data understood by the DSP 1300, as known by those skilled in the art. Further, the first connecting device 12 comprises an EPP (enhanced parallel port) with a data transfer rate of approx. 1 MBps which delivers a more moderate data transfer rate of 1 MBps by comparison to the data transfer rate of 10 MBps of the SCSI interface. The EPP 1260 is connected to a 25-pin D-shell connector 1280 to permit attachment to a printer interface of a host device for example. Optionally, the first connecting device 12 also comprises a 25-pin connector 1282 which permits the attachment of 8 digital outputs and 8 digital inputs 1284 at a host device.

Preferably, the second connecting device comprises 8 BNC inputs with the calibration relay 1505, a block 1510 with 8 device amplifiers with an overvoltage protection of ±75 V, this block being connected in turn to 8 sample/hold (S&H) circuits 1515. The calibration relays are relays which permit controlled changeover between a test voltage and a calibration reference voltage. Each sample/hold circuit is connected to a corresponding input of an 8-channel multiplexer 1520 which feeds its output signals

via a programmable amplifier 1525 into an analog/digital converter (ADC) with 12 bit and 1.25 MHz 1530 and to the DSP 1300. The ADC 1530 is controlled by means of a 20-bit timer 1535, as known by persons skilled in the art. The programmable amplifier 1525 and the 8-channel multiplexer 1520 are controlled via an amplifier channel selection circuit 1540 which is in turn controlled by the DSP 1300.

The complete interface device 10 is supplied with power by an external AC/DC converter 1800 which delivers a digital supply voltage of ±5 V and is attached to a DC/DC converter 1810 which can deliver analog supply voltages of ±5 V and ±15 V as required for the interface device 10. Further, the DC/DC converter controls a precision voltage reference 1820 which controls the 8 BNC inputs 1505 and the ADC 1530 as well as a digital/analog converter (DAC) 1830 which permits, via an output amplifier block with 4 output amplifiers 1840 and a 9-pin connector 1850, analog output direct from the DSP 1300 to an output device, e.g. printer device or monitor device, which can be attached via the 9-pin connector 1850, thus providing the option of monitoring the data transferred to the host device or also, for example, of viewing an FFT to obtain rapid and comprehensive data analysis without using processor time of the host device.

In Fig. 2 the memory means 14 of Fig. 1 is implemented by an EPROM 1400 which, in a preferred embodiment of the present invention, contains the operating system of the digital signal processor 1300. A random access memory with an access time of 15 ns and a size of 512 KB or optionally 1024 KB 1420 serves as a data buffer to achieve independence in terms of time of the output line 16 from the output lines 11a, 11b and 11c to the data transmit/receive device and to the host device respectively. As described above, in a preferred embodiment of the present invention the digital signal processor 1300 already contains a 20-KB on-chip RAM 1440 which can store certain instruction sets, functions and also smaller application software units.

The connection, symbolized by the line 16, of the interface device 10 to any data transmit/receive device implements, by means of the blocks 1505 – 1535, an analog input with a sampling rate of 1.25 MHz and quantization of 12 bits. There are 8 channels with an overvoltage protection of ± 75 V. By means of the programmable

amplifier 1525 the channels can be programmed independently of each other in voltage ranges up to a maximum of ± 10 V. Unused channels can be grounded internally to reduce channel intermodulation. The block 1515 is implemented as a monolithic high-precision, high-speed sample/hold amplifier for simultaneous sampling of all channels. The precision voltage reference 1820 provides a high-precision, temperature-compensated monolithic energy gap voltage reference for auto-calibration of each channel and each gain. Further, offset fine adjustment for each channel is implemented by the same.

The blocks 1830, 1840 and 1850 implement a direct analog output for the digital signal processor 1300, and the DAC 1830 provides a data transfer rate of 625 kHz and a quantization of 12 bits. The block 1840 comprises 4 channels with a common output latch.

Further, the interface device 10 comprises a digital input/output device implemented by the blocks 1284 and 1282. Here there are 8 digital inputs, 8 digital outputs with a common latch, and the digital port can be attached preferably to a side panel of the interface device 10 so that the port itself can easily be accessed.

The digital signal processor 1300 provides on-board digital data processing. In particular, it is a high-performance DSP with a clock speed of 80 MHz and a 20-bit timer 1535.

As described above, the first connecting device 12 comprises the SCSI interface 1220 with a peak transfer rate of 10 MBps. An optional PCMCIA-to-SCSI adapter permits high-speed communication with laptop computers which are desirable and in widespread use, particularly by mobile service technicians. The EPP 1260 with its associated connector 1280 permits data transfer at a more moderate rate.

As described above, the interface device 10 is supplied with power by means of an external AC/DC adapter which has a universal power input (85 – 264 VAC, 47 – 63 Hz). Interference suppression complies with the standards EN 55022, curve B and FFC, Class B). Further, it is also in accordance with international safety regulations

(TÜV, UL, CSA). The interface device 10 is externally shielded and achieves a value of 55 dB at 30 – 60 MHz and a value of approximately 40 dB at 1 GHz, and therefore complies with the MILSTD 285-1 standard.

As described above, communication between the host device and the multi-purpose interface can take place not only via drivers for input/output device customary in a host device which reside in the BIOS system of the host device but also via specific interface drivers which, in the case of SCSI interfaces, are known as multi-purpose interface ASPI (advanced SCSI programming interface) drivers. This ASPI driver, which can also be referred to as an ASPI manager, is specific to a special SCSI host adapter, i.e. to a special multi-purpose interface, and is normally included by the manufacturer of the multi-purpose interface. Generally speaking, this multi-purpose interface driver has the task of moving precisely specified SCSI commands from the host system program to the host system SCSI adapter. For this reason, the command set is almost identical to that of the SCSI interface itself. Essentially, only status and reset commands for the host adapter have been added.

The ASPI driver can be used if the hard disk was not already addressable at boot time or if the SCSI-related BIOS routines of the host computer were still disabled. Here too, the steps needed to initialize the interface device, preferably as a virtual hard disk, are similar to the steps taken when initializing at boot time.

In general terms, the ASPI manager comprises two sides. One side is the proprietary, hardware-oriented side. It is responsible for converting all commands into a form required by the corresponding multi-purpose interface. The hardware-oriented side of the ASPI driver is therefore matched to a very specific type of multi-purpose interface or SCSI interface. The other side is known as the user software side. This side is totally independent of the proprietary operating characteristics of the SCSI adapter and is therefore identical for all SCSI interfaces. This permits SCSI programming which is however independent of the individual SCSI adapter types.

In contrast to communication between the host device and the interface device according to the present invention on the basis of a BIOS driver, the use of such an ASPI driver for communication between the host device and the interface device

according to the present invention allows various further possibilities of the SCSI multi-purpose interface to be exploited. In the case described above, the interface device which preferably signs on and behaves as a virtual hard disk is detected by the BIOS driver of the host computer at boot time and is configured as a hard disk. This step does not however support active requests sent by the interface device to the host computer. If however the virtual hard disk wishes to write data actively to, for example, a hard disk of the host computer or wishes to initiate communication with the processor of the host computer, the host computer must recognize the request of the virtual hard disk and tolerate a further issuer of instructions on its bus. If the interface device behaves solely like a virtual hard disk, it would always receive and never issue commands. The BIOS has no objections to an additional issuer of commands that actively wishes to place data on the bus of the host device but the BIOS does not support the host device in recognizing corresponding requests of the interface device or in granting the interface device permission to access the bus.

Using the ASPI manager the interface device according to the present invention can now obtain active access to an SCSI hard disk of the host device connected to the same SCSI bus which, in contrast to the interface device, cannot be a virtual but a real SCSI mass storage device or also a further interface device according to the present invention. Thereupon, the interface device according to the present invention can write the desired data to the SCSI hard disk of the host computer totally independently of the host computer or can communicate with the same in some other manner. The interface device according to the present invention therefore initially behaves passively as a virtual hard disk and then, as required and using the driver software for the multi-purpose interface, actively on the same SCSI bus. This means however that the interface device according to the present invention, using a driver software for the multi-purpose interface which comprises the BIOS routines customary in host devices and simultaneously provides the option of active participation, can, regardless of the type of the data transmit/receive device attached to the second connecting device, behave initially as a virtual and at the same time passive hard disk but can, as required, participate actively on the bus so as to be able to initiate communication directly with other SCSI hard disks of the host device by bypassing the processor of the host device.

Using a standard interface of a host device, the interface device according to the present invention permits communication with any host device. By simulating an input/output device to the host device and, in a preferred embodiment, by simulating a virtual mass storage device, the interface device 10 is automatically supported by all known host systems without any additional sophisticated driver software. The simulation of a freely definable file structure on the "virtual" hard disk provides simple operation and expansion options and, through the implementation of any programs, independence from special software implemented on the host device. Help files included on the interface device 10 and plug-and-play support ensure ease of use even in portable, flexible host devices. Despite the very simple user interface, experienced users are free at any time to intervene in the functions of the interface device 10 on system level. The interface device 10 thus provides a universal solution which can cover the entire spectrum of possible data transmit/receive devices.

Claims

1. An interface device (10) for communication between a host device, which comprises drivers for input/output devices customary in a host device and a multi-purpose interface, and a data transmit/receive device comprising the following features:

a processor means (13; 1300, 1320);

a memory means (14; 1400, 1420, 1440);

a first connecting device (12; 1220, 1240, 1260, 1280) for interfacing the host device with the interface device (10) via the multi-purpose interface of the host device; and

a second connecting device (15; 1505 – 1535) for interfacing the interface device (10) with the data transmit/receive device,

wherein the interface device (10) is configured by the processor means (13; 1300, 1320) and the memory means (14; 1400, 1420, 1440) in such a way that the interface device, when receiving an inquiry from the host device as to the type of a device attached to the multi-purpose interface of the host device, sends a signal, regardless of the type of the data transmit/receive device attached to the second connecting device (15; 1505 – 1535) of the interface device (10), to the host device which signals to the host device that it is an input/output device customary in a host device, whereupon the host device communicates with the interface device (10) by means of the driver for the input/output device customary in a host device.

2. An interface device (10) according to claim 1,

wherein the drivers for input/output drivers customary in a host device comprise a

hard disk driver, and the signal indicates to the host device that the host device is communicating with a hard disk.

3. An interface device (10) according to claim 1 or 2,

wherein the memory means comprises a buffer (1420) to buffer data to be transferred between the data transmit/receive device and the host device.

4. An interface device (10) according to one of the preceding claims,

wherein the multi-purpose interface of the host device is an SCSI interface and the first connecting device also comprises an SCSI interface (1220).

5. An interface device (10) according to one of the preceding claims,

wherein the second connecting device comprises an analog input (1505) with a subsequent A/D converter (1530) in order to transfer analog data to the host device from a data transmit/receive device connectable to the analog device (1505).

6. An interface device (10) according to one of the preceding claims,

wherein the processor means (13) is a digital signal processor (1300).

7. An interface device (10) according to one of the claims 2 to 6,

wherein the data to be transferred from the data transmit/receive device to the host device in the interface device (10) is formatted in a suitable format for a hard disk present in the host device.

8. An interface device (10) according to one of the claims 2 to 7,

which further comprises a root directory and virtual files which are present on the

signaled hard disk drive and which can be accessed from the host device.

9. An interface device (10) according to claim 8,

wherein the virtual files comprise a configuration file in text format which are stored in the memory means (14) and using which the user can configure the interface device (10) for a specific data transmit/receive device.

10. An interface device (10) according to claim 8 or 9,

wherein the virtual files comprise batch files or executable files for the microprocessor means which are stored in the interface device (10) in order to perform data processing, independently of the host device, of data received via the second connecting device (15; 1505 – 1535).

11. An interface device (10) according to claim 8 or 9,

wherein the virtual files comprise batch files or executable files for the host device which are stored in the interface device (10).

12. An interface device (10) for communication between a host device, which comprises a multi-purpose interface and a specific driver for this interface, and a data transmit/receive device comprising the following features:

a processor means (13; 1300, 1320);

a memory means (14; 1400, 1420, 1440);

a first connecting device (12; 1220, 1240, 1260, 1280) for interfacing the host device with the interface device (10) via the multi-purpose interface of the host device; and

a second connecting device (15; 1505 – 1535) for interfacing the interface device (10) with the data transmit/receive device,

where the interface device (10) is configured using the processor means (13; 1300, 1320) and the memory means (14; 1400, 1420, 1440) in such a way that the interface device, when receiving an inquiry from the host device as to the type of a device attached at the multi-purpose interface of the host device, sends a signal, regardless of the type of the data transmit/receive device attached to the second connecting device (15; 1505 – 1535) of the interface device (10), to the host device which signals to the host device that it is an input/output device customary in a host device, whereupon the host device communicates with the interface device (10) by means of the specific driver for the multi-purpose interface.

13. An interface device according to claim 12,

wherein, in addition to the first connecting device of the interface device, there is a further input/output device at the multi-purpose interface of the host device, and wherein the interface device can communicate directly with the hard disk via the specific driver for the multi-purpose interface.

14. An interface device according to claim 12 or 13,

wherein the multi-purpose interface is an SCSI interface, and wherein the specific driver for the multi-purpose interface is an ASPI manager.

15. A method of communication between a host device, which comprises drivers for input/output devices customary in a host device and a multi-purpose interface, and a data transmit/receive device via an interface device (10) comprising the following steps:

interfacing of the host device with a first connecting device (12; 1220, 1240, 1260, 1280) of the interface device (10) via the multi-purpose interface of the host device;

interfacing of the data transmit/receive device with a second connecting device (15; 1505 – 1535) of the interface device (10);

inquiring by the host device at the interface device (10) as to the type of device to which the multi-purpose interface of the host device is attached;

regardless of the type of the data transmit/receive device attached to the second connecting device of the interface device (10), responding to the inquiry from the host device by the interface device (10) in such a way that it is an input/output device customary in a host device, whereupon the host device communicates with the interface device (10) by means of the usual driver for the input/output device.

16. A method according to claim 15,

wherein the drivers for input/output devices customary in a host device comprise a driver for a storage device and in particular for a hard disk drive.

Flexible Interface

ABSTRACT

An interface device (10) provides fast data communication between a host device with input/output interfaces and a data transmit/receive device, wherein the interface device (10) comprises a processor means (13), a memory means (14), a first connecting device (12) for interfacing the host device with the interface device, and a second connecting device (15) for interfacing the interface device (10) with the data transmit/receive device. The interface device (10) is configured by the processor means (13) and the memory means (14) in such a way that, when receiving an inquiry from the host device via the first connecting device (12) as to the type of a device attached to the host device, regardless of the type of the data transmit/receive device, the interface device sends a signal to the host device via the first connecting device (12) which signals to the host device that it is communicating with an input/output device.

Declaration and Power of Attorney For Patent Application
Erklärung Für Patentanmeldungen Mit Vollmacht
German Language Declaration

Als nachstehend benannter Erfinder erkläre ich hiermit an Eides Statt:

dass mein Wohnsitz, meine Postanschrift, und meine Staatsangehörigkeit den im Nachstehenden nach meinem Namen aufgeführten Angaben entsprechen,

dass ich, nach bestem Wissen der ursprüngliche, erste und alleinige Erfinder (falls nachstehend nur ein Name angegeben ist) oder ein ursprünglicher, erster und Miterfinder (falls nachstehend mehrere Namen aufgeführt sind) des Gegenstandes bin, für den dieser Antrag gestellt wird und für den ein Patent beantragt wird (2. die Erfindung mit dem Titel:

_____

_____

_____

deren Beschreibung

(zutreffendes ankreuzen)

☐ hier beigefügt ist.

☐ am _____ unter der

Anmeldungsseriennummer _____

eingereicht wurde und am _____
abgeändert wurde (falls tatsächlich abgeändert).

Ich bestätige hiermit, dass ich den Inhalt der obigen Patentanmeldung einschliesslich der Ansprüche durchgesehen und verstanden habe, die eventuell durch einen Zusatzantrag wie oben erwähnt abgeändert wurde.

Ich erkenne meine Pflicht zur Offenbarung irgendwelcher Informationen, die für die Prüfung der vorliegenden Anmeldung in Einklang mit Absatz 37, Bundesgesetzbuch, Paragraph 1.56(a) von Wichtigkeit sind, an.

Ich beanspruche hiermit ausländische Prioritätsvorteile gemäss Abschnitt 35 der Zivilprozessordnung der Vereinigten Staaten, Paragraph 119 aller unten angegebenen Auslandsanmeldungen für ein Patent oder eine Erfindersurkunde, und habe auch alle Auslandsanmeldungen für ein Patent oder eine Erfindersurkunde nachstehend gekennzeichnet, die ein Anmeldedatum haben, das vor dem Anmeldedatum der Anmeldung liegt, für die Priorität beansprucht wird.

As a below named inventor, I hereby declare that:

My residence, post office address and citizenship are as stated below next to my name,

I believe I am the original, first and sole inventor (if only one name is listed below) or an original, first and joint inventor (if plural names are listed below) of the subject matter which is claimed and for which a patent is sought on the invention entitled

Flexible Interface

_____

_____

the specification of which

(check one)

☒ is attached hereto.

☐ was filed on _____ as

Application Serial No. _____

and was amended on _____
(if applicable)

I hereby state that I have reviewed and understand the contents of the above identified specification, including the claims, as amended by any amendment referred to above.

I acknowledge the duty to disclose information which is material to the examination of this application in accordance with Title 37, Code of Federal Regulations, §1.56(a).

I hereby claim foreign priority benefits under Title 35, United States Code, §119 of any foreign application(s) for patent or inventor's certificate listed below and have also identified below any foreign application for patent or inventor's certificate having a filing date before that of the application on which priority is claimed:

ZTE (USA) 1002, Page 33

German Language Declaration

Prior foreign applications
Priorität beansprucht

(Number) (Nummer)	(Country) (Land)	(Day/Month/Year Filed) (Tag/Monat/Jahr eingereicht)	Priority Claimed: Yes Ja	No Nein
19708755.8	Germany	04/3/97 (March 4, 1997)	[X]	[ ]
PCT/EP98/01187	Germany	03/03/98 (March 3, 1998)	[X]	[ ]
			[ ]	[ ]

Ich beanspruche hiermit gemäss Absatz 35 der Zivilprozessordnung der Vereinigten Staaten, Paragraph 120, den Vorzug aller unten aufgeführten Anmeldungen und falls der Gegenstand aus jedem Anspruch dieser Anmeldung nicht in einer früheren amerikanischen Patentanmeldung laut dem ersten Paragraphen des Absatzes 35 der Zivilprozessordnung der Vereinigten Staaten, Paragraph 112 offenbart ist, erkenne ich gemäss Absatz 37, Bundesgesetzbuch, Paragraph 1.56(a) meine Pflicht zur Offenbarung von Informationen an, die zwischen dem Anmeldedatum der früheren Anmeldung und dem nationalen oder PCT internationalen Anmeldedatum dieser Anmeldung bekannt geworden sind.

I hereby claim the benefit under Title 35, United States Code, §120 of any United States application(s) listed below and, insofar as the subject matter of each of the claims of this application is not disclosed in the prior United States application in the manner provided by the first paragraph of Title 35, United States Code, §112, I acknowledge the duty to disclose material information as defined in Title 37, Code of Federal Regulations, §1.56(a) which occurred between the filing date of the prior application and the national or PCT international filing date of this application:

(Application Serial No.) (Anmeldeseriennummer)	(Filing Date) (Anmeldedatum)	(Status) (patentiert, anhängig, aufgegeben)	(Status) (patented, pending, abandoned)

Ich erkläre hiermit, dass alle von mir in der vorliegenden Erklärung gemachten Angaben nach meinem besten Wissen und Gewissen der vollen Wahrheit entsprechen, und dass ich diese eidesstattliche Erklärung in Kenntnis dessen abgebe, dass wissentlich und vorsätzlich falsche Angaben gemäss Paragraph 1001, Absatz 18 der Zivilprozessordnung der Vereinigten Staaten von Amerika mit Geldstrafe belegt und/oder Gefängnis bestraft werden koennen, und dass derartig wissentlich und vorsätzlich falsche Angaben die Gültigkeit der vorliegenden Patentanmeldung oder eines darauf erteilten Patentes gefährden können.

I hereby declare that all statements made herein of my own knowledge are true and that all statements made on information and belief are believed to be true; and further that these statements were made with the knowledge that willful false statements and the like so made are punishable by fine or imprisonment, or both, under Section 1001 of Title 18 of the United States Code and that such willful false statements may jeopardize the validity of the application or any patent issued thereon.

German Language Declaration

VERTRETUNGSVOLLMACHT: Als benannter Erfinder beauftrage ich hiermit den nachstehend benannten Patentanwalt (oder die nachstehend benannten Patentanwälte) und/oder Patent-Agenten mit der Verfolgung der vorliegenden Patentanmeldung sowie mit der Abwicklung aller damit verbundenen Geschäfte vor dem Patent-und Warenzeichenamt: *(Name und Registrationsnummer anführen)*

Donald M. Duft	17,484	William P. Wilbar	43,265
James M. Graziano	28,300	Thomas Swenson	36,696
Carl A. Forest	28,494	Curtis A. Vock	38,356
Dan Cleveland, Jr.	36,106	Kirk D. Williams	42,229
Michael J. Setter	37,936	Steven W. Weinrieb	26,520

POWER OF ATTORNEY: As a named inventor, I hereby appoint the following attorney(s) and/or agent(s) to prosecute this application and transact all business in the Patent and Trademark Office connected therewith. *(list name and registration number)*

Telefongespräche bitte richten an: *(Name und Telefonnummer)*

Direct Telephone Calls to: *(name and telephone number)*

Postanschrift:

Send Correspondence to:
Carl A. Forest, Ph.D.
c/o DUFT, GRAZIANO & FOREST, P.C.
1790-30th Street
- Suite 140 -
Boulder, Colorado 80301-1018, U.S.A.

Voller Name des einzigen oder ursprünglichen Erfinders:	Full name of sole or first inventor Michael TASLER
Unterschrift des Erfinders Datum	Inventor's signature Date April 27, 1999
Wohnsitz	Residence Würzburg, Germany
Staatsangehörigkeit	Citizenship German
Postanschrift	Post Office Address Cronthalstraße 6c
	D-97074 Würzburg, Germany
Voller Name des zweiten Miterfinders (falls zutreffend)	Full name of second joint inventor, if any
Unterschrift des Erfinders Datum	Second inventor's signature Date
Wohnsitz	Residence
Staatsangehörigkeit	Citizenship
Postanschrift	Post Office Address

(Bitte entsprechende Informationen und Unterschriften im Falle von dritten und weiteren Miterfindern angeben).

(Supply similar information and signature for third and subsequent joint inventors.)

Certificate of Mailing under 37 CFR 1.10	Application Number	Applied For
	Filing Date	Herewith
	First Named Inventor	Michael Tasler
	Examiner Name	Du, Thuan N. (2185)
	Attorney Docket Number	13189.129D1 (.150)

I hereby certify that this correspondence is being deposited with the United States Postal Service with sufficient postage in an Express Mail envelope bearing label number: EL946142680US addressed to:

Box Patent Application
Assistant Commissioner for Patents
Washington, D.C. 20231

On August 15, 2002
(Date)

Cheryl Martinez
Signature

Cheryl Martinez
Typed or printed name of person signing Certificate

Note: Each paper must have its own certificate of mailing, or this certificate must identify each submitted paper.

Documents submitted with this Certificate of Mailing if more than one:

1.	Utility Patent Application Form PTO/SB/05 (1 page)
2.	Fee Transmittal Form PTO/SB/17 (2 for a total of 2 pages)
3.	Preliminary Amendment (9 pages)
4.	Specification (18 pages)
5.	Claims (5 pages -- 16 claims)
6.	Abstract (1 page)
7.	Formal Drawings (2 sheets – 2 figures)
8.	Copy of Declaration filed in parent Application No. 09/331,002 (3 pages)
9.	Application Data Sheet (3 pages)
10.	Return Receipt Postcard

PRINT OF DRAWINGS
AS ORIGINALLY FILED

TITLE: Flexible Interface For Communication Between A Host And An Analog I/O Device Connected To The Interface Regardless The Type Of The I/O
INVENTOR(S): Michael Tasler
DOCKET NO.: 13189.129D1 (.150)

10/219105

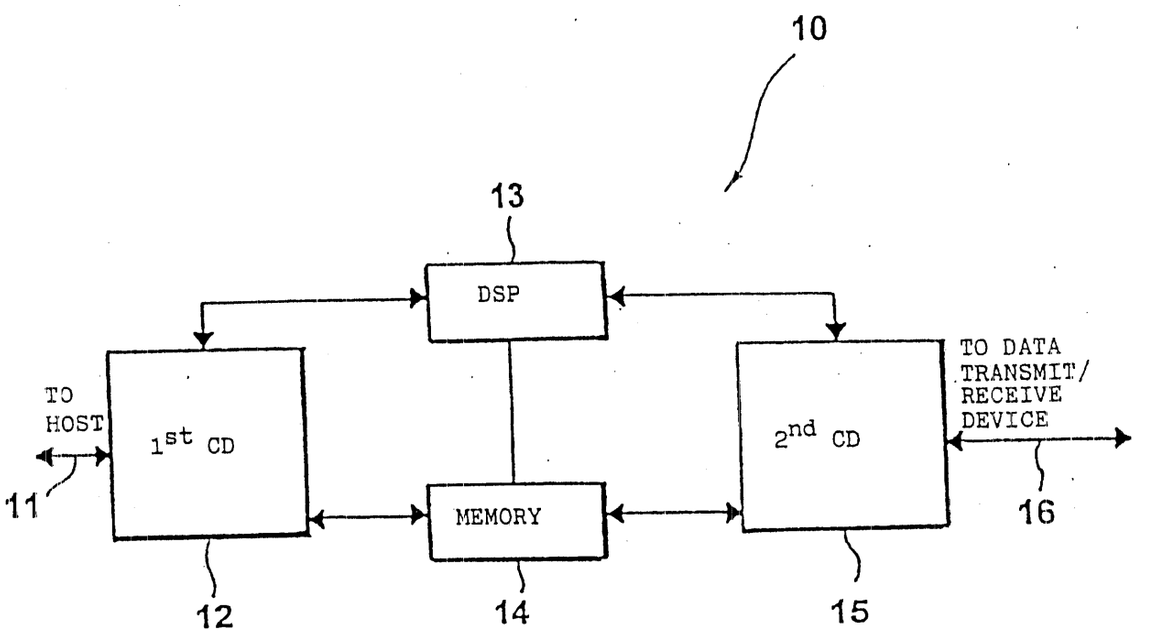

FIG.1

PRINT OF DRAWINGS
AS ORIGINALLY FILED

TITLE: Flexible Interface For Communication Between
A Host And An Analog I/O Device Connected To The
Interface Regardless The Type Of The Device
INVENTOR(S): Michael Tasl
DOCKET NO.: 13189.129D1 (.150)

2 of 2

10/219105

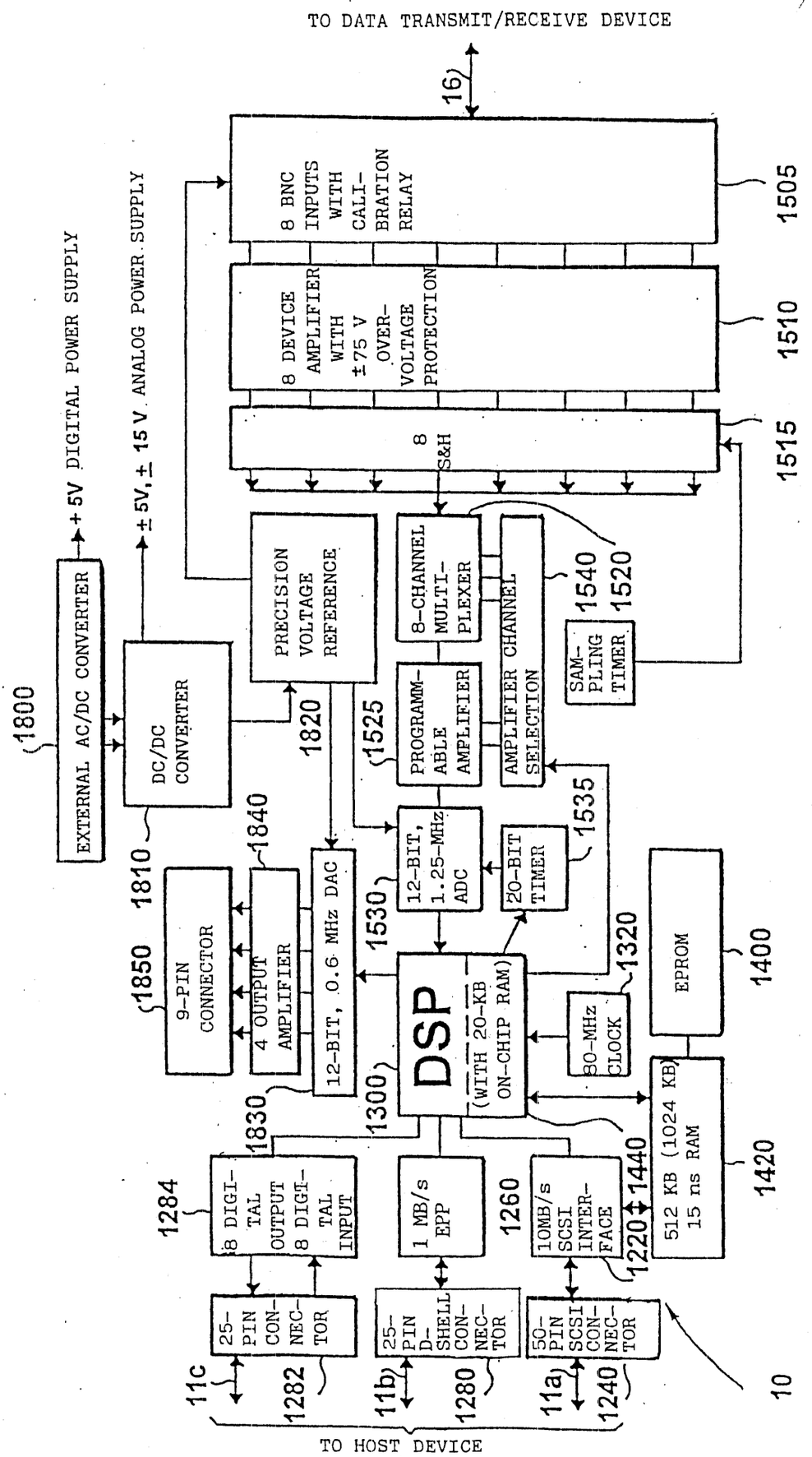

FIG.2

1 319105.081502

IN THE UNITED STATES PATENT AND TRADEMARK OFFICE

U.S. Patent Application No.: Applied For	Group Art Unit: 2185
Filing Date: Herewith	Examiner: Du, Thuan N.
For: Flexible Interface For Communication Between A Host And An Analog I/O Device Connected To The Interface Regardless The Type Of The I/O Device	Docket No: 13189.129D1 (.150)
Applicant: Michael Tasler	

Certificate of Mailing Under 37 CFR 1.10

I hereby certify that this correspondence, along with any and all papers referred to as being attached or enclosed, are being deposited with the United States Postal Service with sufficient postage in an Express Mail envelope bearing Label Number EL946142680US addressed to Box Patent Application, Assistant Commissioner for Patents, Washington, DC 20231.

8/15/02 — Date

Cheryl Martinez — Cheryl Martinez

BOX PATENT APPLICATION
ASSISTANT COMMISSIONER FOR PATENTS
WASHINGTON, DC 20231

Dear Sir:

PRELIMINARY AMENDMENT

In the Specification:

On page 1, line 1, please insert the following paragraph:

--*Related Applications*

This application is a divisional application of copending Application Serial No. 09/331,002 filed June 14, 1999.--

In the Claims:

Please cancel claims 1 – 16 in the original application.

Please add the following claims:

17. An interface device for communication between a host device, which comprises drivers for input/output devices customary in a host device and a multi-purpose interface, and a data transmit/receive device comprising the following features:

a processor;

a memory;

a first connecting device for interfacing the host device with the interface device via the multi-purpose interface of the host device; and

a second connecting device for interfacing the interface device with the data transmit/receive device,

wherein the interface device is configured by the processor and the memory in such a way that the interface device, when receiving an inquiry from the host device as to the type of a device attached to the multi-purpose interface of the host device, sends a signal, regardless of the type of the data transmit/receive device attached to the second connecting device of the interface device, to the host device which signals to the host device that it is a storage device customary in a host device, whereupon the host device communicates with the interface device by means of the driver for the storage device customary in a host device, and

wherein the interface device is arranged for simulating a virtual file system to the host, the virtual file system including a directory structure.

18. An interface device in accordance with claim 17, in which the directory structure has a configuration file for setting and controlling functions of the interface device or an executable or a batch file for conducting a routine stored in the memory or a data file used for transferring data from the data transmit/receive device to the host device or a help file for giving help on handling the interface device.

19. An interface device in accordance with claim 17 wherein, in response to a request from the host to read a boot sequence, the processor is arranged to send a virtual boot sequence to the host.

20. An interface device in accordance with claim 19 wherein the virtual boot sequence includes a starting position and a length of a file allocation table, an indication of a type of the storage device or a number of sectors of the storage device.

21. An interface device in accordance with claim 20 wherein, in response to a request from the host to display a directory of the storage device, a processor is arranged for transferring the file allocation table and the directory structure to the host.

22. An interface device in accordance with claim 17 wherein the file allocation

table and the directory structure is transferred to the host in response to a request from the host to read data from or store data to the storage device.

10 23. An interface device in accordance with claim 17 wherein the directory structure includes a data file for transferring data from the data transmit/receive device to the host device wherein the processor is arranged to interpret a request from the host to read the data file as a request for a data transfer from the data transmit/receive device to the host, so that data is transmitted from the second connecting device to the first connecting device and to the host.

11 24. An interface device in accordance with claim 23 wherein the directory structure further includes a configuration file for specifying a time period for a measurement by the data transmit/receive device, wherein the interface device is arranged for simulating a length of the data file to the host that corresponds to an anticipated volume of data produced by the data transmit/receive device in the specified time period.

12 25. An interface device in accordance with claim 17 wherein the file allocation table includes information on numbers of blocks occupied by the data file wherein the interface device is arranged for receiving block numbers or a block number range from the host when the host wants to read the data file, and wherein the interface device is arranged to start a data transfer to the host, when the block numbers or the block number range is received from the host.

13 26. An interface device in accordance with claim 25 wherein the processor is arranged for formatting the data acquired by the second connecting device into blocks having a predetermined size, the predetermined size being suited for the storage device.

14 27. An interface device in accordance with claim 17 wherein the functions are gain, multiplex or synchronization settings of the second connecting device.

15 28. An interface device in accordance with claim 18 wherein the configuration file is a text file.

16 29. An interface device in accordance with claim 18 wherein the executable file includes a Fast Fourier Transform routine for transforming data acquired by the second connecting device into the frequency domain and for examining frequency domain data.

17 30. An interface device in accordance with claim 18 wherein the executable file

includes a data compression routine for compressing data to be transmitted from the data transmit/receive device to the host device.

31. An interface device in accordance with claim 17 wherein the storage device is a hard disk.

32. An interface device in accordance with claim 17 wherein the memory has a data buffer for permitting independence in terms of time of the data transmit/receive device attachable to the second connecting device from the host device attachable to the first connecting device.

33. An interface device for communication between a host device, which comprises a multi-purpose interface and a specific driver for this interface, and a data transmit/receive device comprising the following features:

a processor;

a memory;

a first connecting device for interfacing the host device with the interface device via the multi-purpose interface of the host device; and

a second connecting device for interfacing the interface device with the data transmit/receive device,

where the interface device is configured using the processor and the memory in such a way that the interface device, when receiving an inquiry from the host device as to the type of a device attached at the multi-purpose interface of the host device, sends a signal, regardless of the type of the data transmit/receive device attached to the second connecting device of the interface device, to the host device which signals to the host device that it is a storage device customary in a host device, whereupon the host device communicates with the interface device by means of the specific driver for the multi-purpose interface, and

wherein the interface device is arranged for simulating a virtual file system to the host, the virtual file system including a file allocation table and a directory structure.

34. A method of communication between a host device, which comprises drivers for input/output devices customary in a host device and a multi-purpose interface, and a data transmit/receive device via an interface device comprising the following steps:

interfacing of the host device with a first connecting device of the interface device via the multi-purpose interface of the host device;

interfacing of the data transmit/receive device with a second connecting device of the interface device;

inquiring by the host device at the interface device as to the type of device to which the multi-purpose interface of the host device is attached;

regardless of the type of the data transmit/receive device attached to the second connecting device of the interface device, responding to the inquiry from the host device by the interface device in such a way that it is a storage device customary in a host device, whereupon the host device communicates with the interface device by means of the usual driver for the storage device, and

wherein the interface device is arranged for simulating a virtual file system to the host, the virtual file system including a file allocation table and a directory structure.

REMARKS

Applicants respectfully request that the examiner base the examination upon claims 17 – 34 as added in this Preliminary Amendment. Claims 1 – 16 were prosecuted in U.S. Patent Application No. 09/331,002, the parent application of this divisional.

In view of the foregoing amendment, it is believed that the application, including claims 17 – 34 included in this Preliminary Amendment, is in condition for allowance, and favorable action is respectfully requested. The examiner is invited to contact the undersigned by collect telephone call to advance the prosecution in any respect.

No additional fee for this Preliminary Amendment is seen to be required. If any additional fee is required, please charge it to Deposit Account No. 50-1848.

Respectfully submitted,
PATTON BOGGS LLP

By: _____

Carl A. Forest, Reg. No. 28,494
Telephone: (303) 379-1114
Facsimile: (303) 379-1155
Customer No.: 24283

VERSION WITH MARKINGS TO SHOW CHANGES MADE

In the Specification:

On page 1, line 1, the following paragraph has been inserted:

Related Applications

This application is a divisional application of copending Application Serial No. 09/331,002 filed June 14, 1999.

In the Claims:

Claims 1 – 16 in the original application have been canceled.

The following claims have been added:

17. An interface device for communication between a host device, which comprises drivers for input/output devices customary in a host device and a multi-purpose interface, and a data transmit/receive device comprising the following features:

a processor;

a memory;

a first connecting device for interfacing the host device with the interface device via the multi-purpose interface of the host device; and

a second connecting device for interfacing the interface device with the data transmit/receive device,

wherein the interface device is configured by the processor and the memory in such a way that the interface device, when receiving an inquiry from the host device as to the type of a device attached to the multi-purpose interface of the host device, sends a signal, regardless of the type of the data transmit/receive device attached to the second connecting device of the interface device, to the host device which signals to the host device that it is a storage device customary in a host device, whereupon the host device communicates with the interface device by means of the driver for the storage device customary in a host device, and

wherein the interface device is arranged for simulating a virtual file system to the host, the virtual file system including a directory structure.

18. Interface device in accordance with claim 17, in which the directory structure has a configuration file for setting and controlling functions of the interface device or an

ZTE (USA) 1002, Page 44

executable or a batch file for conducting a routine stored in the memory or a data file used for transferring data from the data transmit/receive device to the host device or a help file for giving help on handling the interface device.

19. An interface device in accordance with claim 17 wherein, in response to a request from the host to read a boot sequence, the processor is arranged to send a virtual boot sequence to the host.

20. An interface device in accordance with claim 19 wherein the virtual boot sequence includes a starting position and a length of a file allocation table, an indication of a type of the storage device or a number of sectors of the storage device.

21. An interface device in accordance with claim 20 wherein, in response to a request from the host to display a directory of the storage device, a processor is arranged for transferring the file allocation table and the directory structure to the host.

22. An interface device in accordance with claim 17 wherein the file allocation table and the directory structure is transferred to the host in response to a request from the host to read data from or store data to the storage device.

23. An interface device in accordance with claim 17 wherein the directory structure includes a data file for transferring data from the data transmit/receive device to the host device wherein the processor is arranged to interpret a request from the host to read the data file as a request for a data transfer from the data transmit/receive device to the host, so that data is transmitted from the second connecting device to the first connecting device and to the host.

24. An interface device in accordance with claim 23 wherein the directory structure further includes a configuration file for specifying a time period for a measurement by the data transmit/receive device, wherein the interface device is arranged for simulating a length of the data file to the host that corresponds to an anticipated volume of data produced by the data transmit/receive device in the specified time period.

25. An interface device in accordance with claim 17 wherein the file allocation table includes information on numbers of blocks occupied by the data file wherein the interface device is arranged for receiving block numbers or a block number range from the host when the host wants to read the data file, and wherein the interface device is

arranged to start a data transfer to the host, when the block numbers or the block number range is received from the host.

26. An interface device in accordance with claim 25 wherein the processor is arranged for formatting the data acquired by the second connecting device into blocks having a predetermined size, the predetermined size being suited for the storage device.

27. An interface device in accordance with claim 17 wherein the functions are gain, multiplex or synchronization settings of the second connecting device.

28. An interface device in accordance with claim 18 wherein the configuration file is a text file.

29. An interface device in accordance with claim 18 wherein the executable file includes a Fast Fourier Transform routine for transforming data acquired by the second connecting device into the frequency domain and for examining frequency domain data.

30. An interface device in accordance with claim 18 wherein the executable file includes a data compression routine for compressing data to be transmitted from the data transmit/receive device to the host device.

31. An interface device in accordance with claim 17 wherein the storage device is a hard disk.

32. An interface device in accordance with claim 17 wherein the memory has a data buffer for permitting independence in terms of time of the data transmit/receive device attachable to the second connecting device from the host device attachable to the first connecting device.

33. An interface device for communication between a host device, which comprises a multi-purpose interface and a specific driver for this interface, and a data transmit/receive device comprising the following features:

a processor;

a memory;

a first connecting device for interfacing the host device with the interface device via the multi-purpose interface of the host device; and

a second connecting device for interfacing the interface device with the data transmit/receive device,

where the interface device is configured using the processor and the memory in such a way that the interface device, when receiving an inquiry from the host device as to the type of a device attached at the multi-purpose interface of the host device, sends a signal, regardless of the type of the data transmit/receive device attached to the second connecting device of the interface device, to the host device which signals to the host device that it is a storage device customary in a host device, whereupon the host device communicates with the interface device by means of the specific driver for the multi-purpose interface, and

wherein the interface device is arranged for simulating a virtual file system to the host, the virtual file system including a file allocation table and a directory structure.

34. A method of communication between a host device, which comprises drivers for input/output devices customary in a host device and a multi-purpose interface, and a data transmit/receive device via an interface device comprising the following steps:

interfacing of the host device with a first connecting device of the interface device via the multi-purpose interface of the host device;

interfacing of the data transmit/receive device with a second connecting device of the interface device;

inquiring by the host device at the interface device as to the type of device to which the multi-purpose interface of the host device is attached;

regardless of the type of the data transmit/receive device attached to the second connecting device of the interface device, responding to the inquiry from the host device by the interface device in such a way that it is a storage device customary in a host device, whereupon the host device communicates with the interface device by means of the usual driver for the storage device, and

wherein the interface device is arranged for simulating a virtual file system to the host, the virtual file system including a file allocation table and a directory structure.

2151

02-27-03

OIPE
FEB 2 5 2003
PATENT & TRADEMARK OFFICE

IN THE UNITED STATES PATENT AND TRADEMARK OFFICE

In re application of: Michael Tasler, et al. Docket No. SCHO0102D
Serial No.: 10/219,105 Group Art Unit: Unassigned
Filed: 08/15/2002 Examiner: Unassigned
Title: Flexible Interface for Communication Between a Host and an Analog I/O Device Connected to the Interfacc...

Revocation of Prior and Grant of New Power of Attorney

As Assignee of record of the entire interest of thc above-identified patents, all powers of attorney previously given are hereby revoked and the following attorneys and agents are hereby appointed to prosecute and transact all business in the U.S. Patent and Trademark Office connected therewith.

MICHAEL A. GLENN, Reg. No. 30,176
DONALD M. HENDRICKS, Reg. No. 40,355
KIRK WONG, Reg. No. 43,284
CHRISTOPHER PEIL, Reg. No. 45,005
JULIA THOMAS, Reg. No. 52,283

RECEIVED
MAR 0 6 2003
Technology Center 2100

Please send all correspondencc for this application as follows:

GLENN PATENT GROUP
3475 Edison Way, Suite L
Menlo Park, CA 94025
Please direct any calls to 650-474-8400.

Please change the Attorney Docket No. to SCHO0102D.

In accordance with 37 CFR 3.73, the assignee hereby certifies that the evidentiary documents with respect to its ownership have been reviewed and that, to the best of assignee's knowledge and belief, title is in thc assignee seeking to take this action.

01/10/2003 Michael Tasler
Date Name:
Title:

Notice of Allowability	Application No.	Applicant(s)	
	10/219,105	MICHAEL TASLER	
	Examiner	Art Unit	
	Harold Kim	2182	

-- The MAILING DATE of this communication appears on the cover sheet with the correspondence address--

All claims being allowable, PROSECUTION ON THE MERITS IS (OR REMAINS) CLOSED in this application. If not included herewith (or previously mailed), a Notice of Allowance (PTOL-85) or other appropriate communication will be mailed in due course. **THIS NOTICE OF ALLOWABILITY IS NOT A GRANT OF PATENT RIGHTS.** This application is subject to withdrawal from issue at the initiative of the Office or upon petition by the applicant. See 37 CFR 1.313 and MPEP 1308.

1. ☒ This communication is responsive to *Amendment A, filed on 8/15/02*.

2. ☒ The allowed claim(s) is/are *17-34. [now 1-18]*.

3. ☒ The drawings filed on *15 August 2002* are accepted by the Examiner.

4. ☒ Acknowledgment is made of a claim for foreign priority under 35 U.S.C. § 119(a)-(d) or (f).
   a) ☒ All b) ☐ Some* c) ☐ None of the:
      1. ☐ Certified copies of the priority documents have been received.
      2. ☒ Certified copies of the priority documents have been received in Application No. *09/331,002* .
      3. ☐ Copies of the certified copies of the priority documents have been received in this national stage application from the International Bureau (PCT Rule 17.2(a)).

   * Certified copies not received: _____.

Applicant has THREE MONTHS FROM THE "MAILING DATE" of this communication to file a reply complying with the requirements noted below. Failure to timely comply will result in ABANDONMENT of this application.
THIS THREE-MONTH PERIOD IS NOT EXTENDABLE.

5. ☐ A SUBSTITUTE OATH OR DECLARATION must be submitted. Note the attached EXAMINER'S AMENDMENT or NOTICE OF INFORMAL PATENT APPLICATION (PTO-152) which gives reason(s) why the oath or declaration is deficient.

6. ☐ CORRECTED DRAWINGS (as "replacement sheets") must be submitted.
   (a) ☐ including changes required by the Notice of Draftsperson's Patent Drawing Review (PTO-948) attached
      1) ☐ hereto or 2) ☐ to Paper No./Mail Date _____.
   (b) ☐ including changes required by the attached Examiner's Amendment / Comment or in the Office action of Paper No./Mail Date _____.

   Identifying indicia such as the application number (see 37 CFR 1.84(c)) should be written on the drawings in the front (not the back) of each sheet. Replacement sheet(s) should be labeled as such in the header according to 37 CFR 1.121(d).

7. ☐ DEPOSIT OF and/or INFORMATION about the deposit of BIOLOGICAL MATERIAL must be submitted. Note the attached Examiner's comment regarding REQUIREMENT FOR THE DEPOSIT OF BIOLOGICAL MATERIAL.

Attachment(s)

1. ☒ Notice of References Cited (PTO-892)
2. ☐ Notice of Draftperson's Patent Drawing Review (PTO-948)
3. ☐ Information Disclosure Statements (PTO-1449 or PTO/SB/08), Paper No./Mail Date _____
4. ☐ Examiner's Comment Regarding Requirement for Deposit of Biological Material
5. ☐ Notice of Informal Patent Application (PTO-152)
6. ☐ Interview Summary (PTO-413), Paper No./Mail Date _____.
7. ☐ Examiner's Amendment/Comment
8. ☒ Examiner's Statement of Reasons for Allowance
9. ☒ Other _____.

JEFFREY GAFFIN
SUPERVISORY PATENT EXAMINER
TECHNOLOGY CENTER 2100

Reasons for Allowance

1. The following is an examiner's statement of reasons for allowance:

The prior art cited on the attached form PTO-892 is the most relevant prior art known. However, Applicant's claimed invention distinguishes over the prior art for the following reasons. The claims are allowable over the prior art of record because none of the references, either alone or in combination, discloses or renders obvious, when an interface device is receiving an inquiry from a host device as to the type of a device attached to a multi-purpose interface of the host device, the interface device sends a signal to the host device that the attached device is a storage device customary in a host device, regardless of the type of the attached device, and wherein the interface device is arranged for simulating a virtual file system to the host device that the virtual file system including a directory structure. The cited references at most, contain only one or the other, but not all the limitations claimed. There would also be no reason to make any of the possible combinations.

2. Any comments considered necessary by applicant must be submitted no later than the payment of the issue fee and, to avoid processing delays, should preferably accompany the issue fee. Such submissions should be clearly labeled "Comments on Statement of Reasons for Allowance."

Any response to this action should be mailed to:

Mail Stop _____
Commissioner for Patents
P.O. Box 1450
Alexandria, VA 22313-1450

The centralized fax number is 703 872-9306.

The centralized hand carry paper drop off location is:

U.S. Patent and Trademark Office
2011 South Clark Place
Customer Window
Crystal Plaza Two, Lobby, Room 1B03

Any inquiry of a general nature or relating to the status of this application should be directed to the technology center receptionist whose telephone number is (703) 306-5631.

Direct any inquiries concerning drawing review to the Drawing Review Branch (703) 305-8404.

Any inquiry concerning this communication or earlier communications from the examiner should be directed to Harold Kim whose telephone number is 703-305-1948. The examiner can normally be reached on Monday-Thursday 6AM-4PM.

If attempts to reach the examiner by telephone are unsuccessful, the examiner's supervisor, Jeffrey Gaffin can be reached on 703-308-3301. The fax phone number for the organization where this application or proceeding is assigned is 703-872-9306.

Information regarding the status of an application may be obtained from the Patent Application Information Retrieval (PAIR) system. Status information for published applications may be obtained from either Private PAIR or Public PAIR. Status information for unpublished applications is available through Private PAIR only. For more information about the PAIR system, see http://pair-direct.uspto.gov. Should you have questions on access to the Private PAIR system, contact the Electronic Business Center (EBC) at 866-217-9197 (toll-free).

HK
Harold J. Kim
Patent Examiner
May 17, 2004/HK

Notice of References Cited	Application/Control No. 10/219,105	Applicant(s)/Patent Under Reexamination MICHAEL TASLER	
	Examiner Harold Kim	Art Unit 2182	Page 1 of 1

U.S. PATENT DOCUMENTS

*		Document Number Country Code-Number-Kind Code	Date MM-YYYY	Name	Classification
*	A	US-5,548,783	08-1996	Jones et al.	710/16
*	B	US-6,728,844	04-2004	Sanada et al.	711/152
*	C	US-6,725,293	04-2004	Nakayama et al.	710/36
*	D	US-6,012,113	01-2000	Tuckner, Steven A.	710/64
*	E	US-6,363,081	03-2002	Gase, Stephen T.	370/466
*	F	US-6,266,711	07-2001	Ishikawa et al.	710/8
*	G	US-5,628,030	05-1997	Tuckner, Steven A.	710/64
*	H	US-5,596,628	01-1997	Klein, Jon	379/93.11
	I	US-			
	J	US-			
	K	US-			
	L	US-			
	M	US-			

FOREIGN PATENT DOCUMENTS

*		Document Number Country Code-Number-Kind Code	Date MM-YYYY	Country	Name	Classification
	N					
	O					
	P					
	Q					
	R					
	S					
	T					

NON-PATENT DOCUMENTS

*		Include as applicable: Author, Title Date, Publisher, Edition or Volume, Pertinent Pages)
	U	
	V	
	W	
	X	

* A copy of this reference is not being furnished with this Office action. (See MPEP § 707.05(a).)
Dates in MM-YYYY format are publication dates. Classifications may be US or foreign.

UNITED STATES PATENT AND TRADEMARK OFFICE

UNITED STATES DEPARTMENT OF COMMERCE
United States Patent and Trademark Office
Address: COMMISSIONER FOR PATENTS
P.O. Box 1450
Alexandria, Virginia 22313-1450
www.uspto.gov

NOTICE OF ALLOWANCE AND FEE(S) DUE

24283 7590 05/20/2004

PATTON BOGGS
1660 LINCOLN ST
SUITE 2050
DENVER, CO 80264

EXAMINER	
KIM, HAROLD J	
ART UNIT	PAPER NUMBER
2182	

DATE MAILED: 05/20/2004

APPLICATION NO.	FILING DATE	FIRST NAMED INVENTOR	ATTORNEY DOCKET NO.	CONFIRMATION NO.
10/219,105	08/15/2002	Michael Tasler	13189.129D1 (.150)	6042

TITLE OF INVENTION: FLEXIBLE INTERFACE FOR COMMUNICATION BETWEEN A HOST AND AN ANALOG I/O DEVICE CONNECTED TO THE INTERFACE REGARDLESS THE TYPE OF THE I/O DEVICE

APPLN. TYPE	SMALL ENTITY	ISSUE FEE	PUBLICATION FEE	TOTAL FEE(S) DUE	DATE DUE
nonprovisional	YES	$665	$300	$965	08/20/2004

THE APPLICATION IDENTIFIED ABOVE HAS BEEN EXAMINED AND IS ALLOWED FOR ISSUANCE AS A PATENT. PROSECUTION ON THE MERITS IS CLOSED. THIS NOTICE OF ALLOWANCE IS NOT A GRANT OF PATENT RIGHTS. THIS APPLICATION IS SUBJECT TO WITHDRAWAL FROM ISSUE AT THE INITIATIVE OF THE OFFICE OR UPON PETITION BY THE APPLICANT. SEE 37 CFR 1.313 AND MPEP 1308.

THE ISSUE FEE AND PUBLICATION FEE (IF REQUIRED) MUST BE PAID WITHIN THREE MONTHS FROM THE MAILING DATE OF THIS NOTICE OR THIS APPLICATION SHALL BE REGARDED AS ABANDONED. THIS STATUTORY PERIOD CANNOT BE EXTENDED. SEE 35 U.S.C. 151. THE ISSUE FEE DUE INDICATED ABOVE REFLECTS A CREDIT FOR ANY PREVIOUSLY PAID ISSUE FEE APPLIED IN THIS APPLICATION. THE PTOL-85B (OR AN EQUIVALENT) MUST BE RETURNED WITHIN THIS PERIOD EVEN IF NO FEE IS DUE OR THE APPLICATION WILL BE REGARDED AS ABANDONED.

HOW TO REPLY TO THIS NOTICE:

I. Review the SMALL ENTITY status shown above.

If the SMALL ENTITY is shown as YES, verify your current SMALL ENTITY status:
A. If the status is the same, pay the TOTAL FEE(S) DUE shown above.

B. If the status is changed, pay the PUBLICATION FEE (if required) and twice the amount of the ISSUE FEE shown above and notify the United States Patent and Trademark Office of the change in status, or

If the SMALL ENTITY is shown as NO:

A. Pay TOTAL FEE(S) DUE shown above, or

B. If applicant claimed SMALL ENTITY status before, or is now claiming SMALL ENTITY status, check the box below and enclose the PUBLICATION FEE and 1/2 the ISSUE FEE shown above.

☐ Applicant claims SMALL ENTITY status. See 37 CFR 1.27.

II. PART B - FEE(S) TRANSMITTAL should be completed and returned to the United States Patent and Trademark Office (USPTO) with your ISSUE FEE and PUBLICATION FEE (if required). Even if the fee(s) have already been paid, Part B - Fee(s) Transmittal should be completed and returned. If you are charging the fee(s) to your deposit account, section "4b" of Part B - Fee(s) Transmittal should be completed and an extra copy of the form should be submitted.

III. All communications regarding this application must give the application number. Please direct all communications prior to issuance to Mail Stop ISSUE FEE unless advised to the contrary.

IMPORTANT REMINDER: Utility patents issuing on applications filed on or after Dec. 12, 1980 may require payment of maintenance fees. It is patentee's responsibility to ensure timely payment of maintenance fees when due.

PTOL-85 (Rev. 11/03) Approved for use through 04/30/2004.

PART B - FEE(S) TRANSMITTAL

Complete and send this form, together with applicable fee(s), to: Mail **Mail Stop ISSUE FEE**
Commissioner for Patents
P.O. Box 1450
Alexandria, Virginia 22313-1450

or Fax **(703) 746-4000**

INSTRUCTIONS: This form should be used for transmitting the ISSUE FEE and PUBLICATION FEE (if required). Blocks 1 through 4 should be completed where appropriate. All further correspondence including the Patent, advance orders and notification of maintenance fees will be mailed to the current correspondence address as indicated unless corrected below or directed otherwise in Block 1, by (a) specifying a new correspondence address; and/or (b) indicating a separate "FEE ADDRESS" for maintenance fee notifications.

CURRENT CORRESPONDENCE ADDRESS (Note: Legibly mark-up with any corrections or use Block 1)

24283 7590 05/20/2004

PATTON BOGGS
1660 LINCOLN ST
SUITE 2050
DENVER, CO 80264

Note: A certificate of mailing can only be used for domestic mailings of the Fee(s) Transmittal. This certificate cannot be used for any other accompanying papers. Each additional paper, such as an assignment or formal drawing, must have its own certificate of mailing or transmission.

Certificate of Mailing or Transmission

I hereby certify that this Fee(s) Transmittal is being deposited with the United States Postal Service with sufficient postage for first class mail in an envelope addressed to the Mail Stop ISSUE FEE address above, or being facsimile transmitted to the USPTO, on the date indicated below.

(Depositor's name)

(Signature)

(Date)

APPLICATION NO.	FILING DATE	FIRST NAMED INVENTOR	ATTORNEY DOCKET NO.	CONFIRMATION NO.
10/219,105	08/15/2002	Michael Tasler	13189.129D1 (.150)	6042

TITLE OF INVENTION: FLEXIBLE INTERFACE FOR COMMUNICATION BETWEEN A HOST AND AN ANALOG I/O DEVICE CONNECTED TO THE INTERFACE REGARDLESS THE TYPE OF THE I/O DEVICE

APPLN. TYPE	SMALL ENTITY	ISSUE FEE	PUBLICATION FEE	TOTAL FEE(S) DUE	DATE DUE
nonprovisional	YES	$665	$300	$965	08/20/2004

EXAMINER	ART UNIT	CLASS-SUBCLASS
KIM, HAROLD J	2182	710-016000

1. Change of correspondence address or indication of "Fee Address" (37 CFR 1.363).

❑ Change of correspondence address (or Change of Correspondence Address form PTO/SB/122) attached.

❑ "Fee Address" indication (or "Fee Address" Indication form PTO/SB/47; Rev 03-02 or more recent) attached. **Use of a Customer Number is required.**

2. For printing on the patent front page, list (1) the names of up to 3 registered patent attorneys or agents OR, alternatively, (2) the name of a single firm (having as a member a registered attorney or agent) and the names of up to 2 registered patent attorneys or agents. If no name is listed, no name will be printed.

1 _____

2 _____

3 _____

3. ASSIGNEE NAME AND RESIDENCE DATA TO BE PRINTED ON THE PATENT (print or type)

PLEASE NOTE: Unless an assignee is identified below, no assignee data will appear on the patent. Inclusion of assignee data is only appropriate when an assignment has been previously submitted to the USPTO or is being submitted under separate cover. Completion of this form is NOT a substitute for filing an assignment.

(A) NAME OF ASSIGNEE (B) RESIDENCE: (CITY and STATE OR COUNTRY)

Please check the appropriate assignee category or categories (will not be printed on the patent); ❑ individual ❑ corporation or other private group entity ❑ government

4a. The following fee(s) are enclosed:

❑ Issue Fee

❑ Publication Fee

❑ Advance Order - # of Copies _____

4b. Payment of Fee(s):

❑ A check in the amount of the fee(s) is enclosed.

❑ Payment by credit card. Form PTO-2038 is attached.

❑ The Director is hereby authorized by charge the required fee(s), or credit any overpayment, to Deposit Account Number _____ (enclose an extra copy of this form).

Director for Patents is requested to apply the Issue Fee and Publication Fee (if any) or to re-apply any previously paid issue fee to the application identified above.

(Authorized Signature) (Date)

NOTE: The Issue Fee and Publication Fee (if required) will not be accepted from anyone other than the applicant; a registered attorney or agent; or the assignee or other party in interest as shown by the records of the United States Patent and Trademark Office.

This collection of information is required by 37 CFR 1.311. The information is required to obtain or retain a benefit by the public which is to file (and by the USPTO to process) an application. Confidentiality is governed by 35 U.S.C. 122 and 37 CFR 1.14. This collection is estimated to take 12 minutes to complete, including gathering, preparing, and submitting the completed application form to the USPTO. Time will vary depending upon the individual case. Any comments on the amount of time you require to complete this form and/or suggestions for reducing this burden, should be sent to the Chief Information Officer, U.S. Patent and Trademark Office, U.S. Department of Commerce, Alexandria, Virginia 22313-1450. DO NOT SEND FEES OR COMPLETED FORMS TO THIS ADDRESS. SEND TO: Commissioner for Patents, Alexandria, Virginia 22313-1450.

Under the Paperwork Reduction Act of 1995, no persons are required to respond to a collection of information unless it displays a valid OMB control number.

TRANSMIT THIS FORM WITH FEE(S)

ZTE (USA) 1002, Page 55

UNITED STATES PATENT AND TRADEMARK OFFICE

UNITED STATES DEPARTMENT OF COMMERCE
United States Patent and Trademark Office
Address: COMMISSIONER FOR PATENTS
P.O. Box 1450
Alexandria, Virginia 22313-1450
www.uspto.gov

APPLICATION NO.	FILING DATE	FIRST NAMED INVENTOR	ATTORNEY DOCKET NO.	CONFIRMATION NO.
10/219,105	08/15/2002	Michael Tasler	13189.129D1 (.150)	5042

24283 7590 05/20/2004

PATTON BOGGS
1660 LINCOLN ST
SUITE 2050
DENVER, CO 80264

EXAMINER	
KIM, HAROLD J	

ART UNIT	PAPER NUMBER
2182	3

DATE MAILED: 05/20/2004

Determination of Patent Term Adjustment under 35 U.S.C. 154 (b)
(application filed on or after May 29, 2000)

The Patent Term Adjustment to date is 218 day(s). If the issue fee is paid on the date that is three months after the mailing date of this notice and the patent issues on the Tuesday before the date that is 28 weeks (six and a half months) after the mailing date of this notice, the Patent Term Adjustment will be 218 day(s).

If a Continued Prosecution Application (CPA) was filed in the above-identified application, the filing date that determines Patent Term Adjustment is the filing date of the most recent CPA.

Applicant will be able to obtain more detailed information by accessing the Patent Application Information Retrieval (PAIR) system (http://pair.uspto.gov).

Any questions regarding the Patent Term Extension or Adjustment determination should be directed to the Office of Patent Legal Administration at (703) 305-1383. Questions relating to issue and publication fee payments should be directed to the Customer Service Center of the Office of Patent Publication at (703) 305-8283.

PTOL-85 (Rev. 11/03) Approved for use through 04/30/2004.

ZTE (USA) 1002, Page 56

3105.081502

6895449

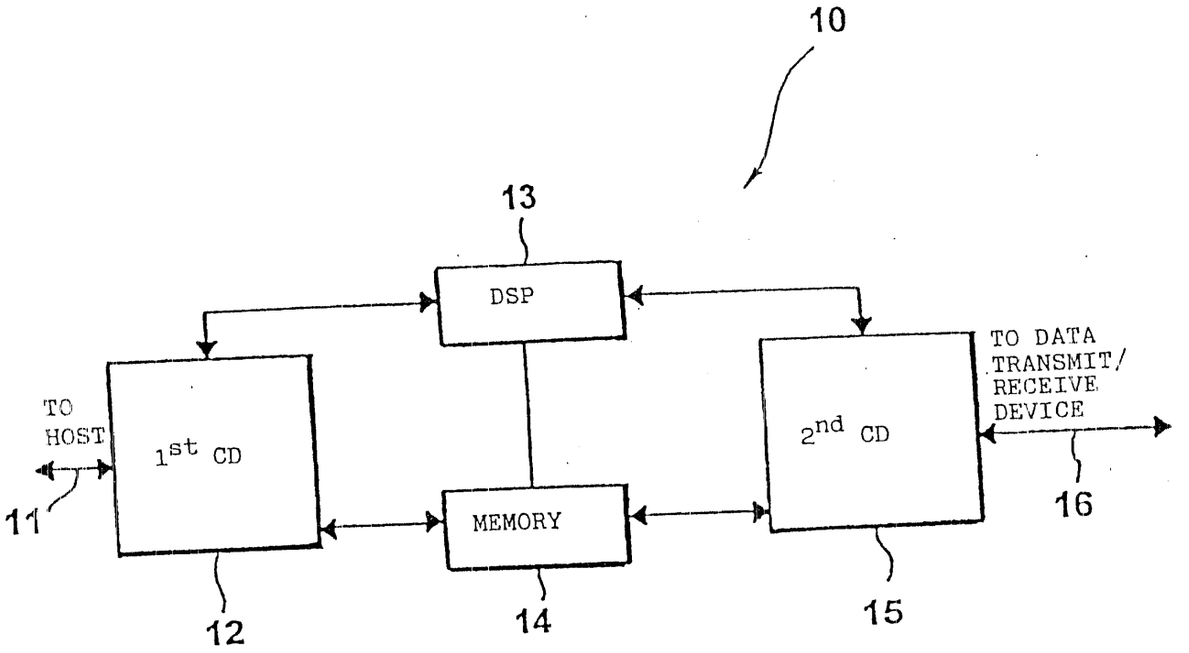

FIG.1

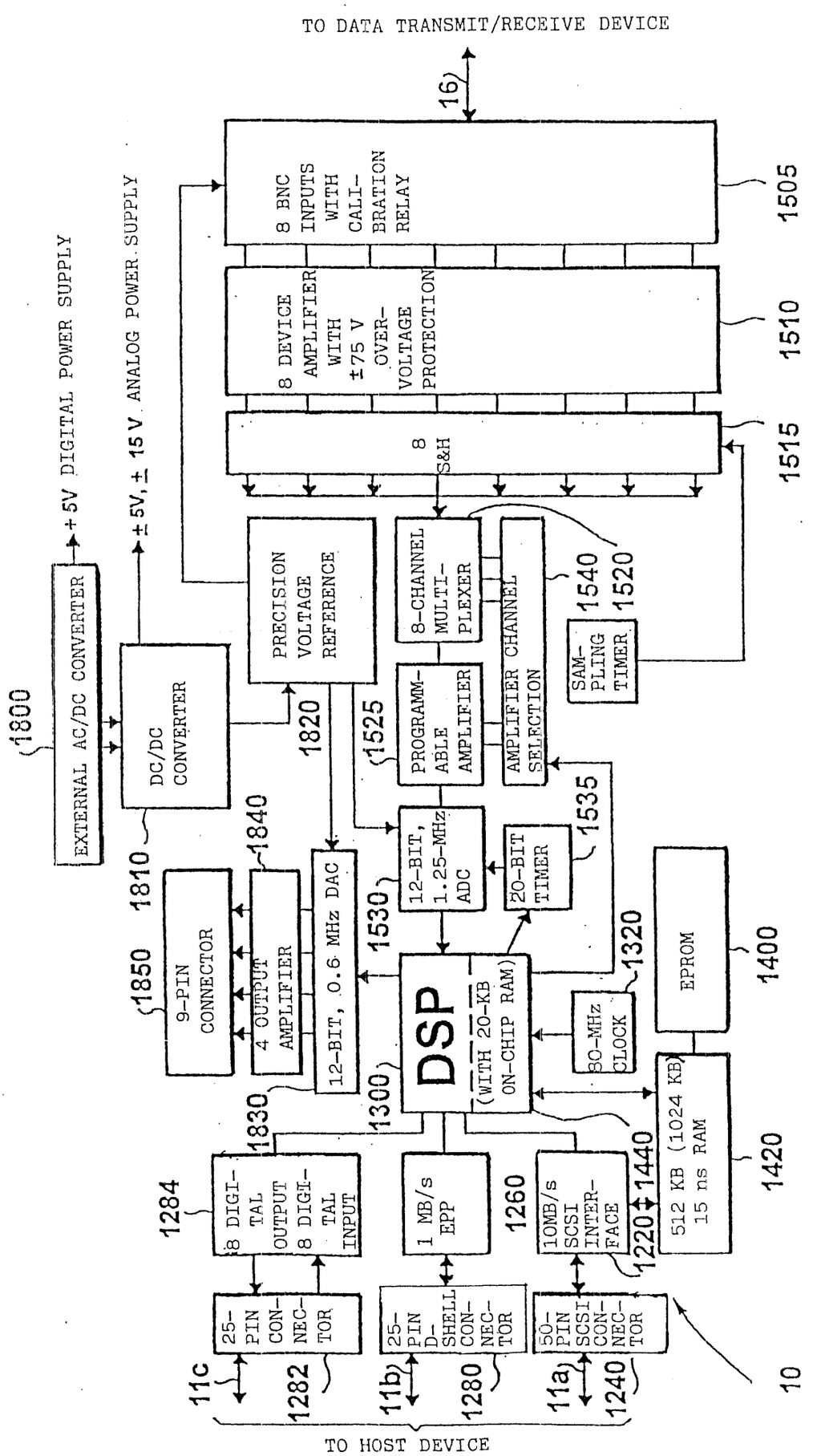
TO DATA TRANSMIT/RECEIVE DEVICE
16
8 BNC INPUTS WITH CALI-BRATION RELAY
1505
8 DEVICE AMPLIFIER WITH ±75 V OVER-VOLTAGE PROTECTION
1510
8 S&H
1515
8-CHANNEL MULTI-PLEXER
1540
AMPLIFIER CHANNEL SELECTION
1520
SAM-PLING TIMER
PRECISION VOLTAGE REFERENCE
1820
1525
PROGRAMM-ABLE AMPLIFIER
12-BIT, 1.25-MHz ADC
20-BIT TIMER
1535
1530
1840
12-BIT, 0.6 MHz DAC
4 OUTPUT AMPLIFIER
1810
1850
9-PIN CONNECTOR
DC/DC CONVERTER
1800
EXTERNAL AC/DC CONVERTER
+ 5V DIGITAL POWER SUPPLY
± 5V, ± 15 V ANALOG POWER SUPPLY
DSP
(WITH 20-KB ON-CHIP RAM)
1300
80-MHz CLOCK
1320
EPROM
1400
512 KB (1024 KB) 15 ns RAM
1420
1830
8 DIGI-TAL OUTPUT
8 DIGI-TAL INPUT
1284
1 MB/s EPP
1260
10MB/s SCSI INTER-FACE
1220
1440
25-PIN CON-NEC-TOR
1282
25-PIN D-SHELL CON-NEC-TOR
1280
50-PIN SCSI CON-NEC-TOR
1240
11c
11b
11a
10
TO HOST DEVICE

FIG.2

AUG 17 2004 USPTO PATENT & TRADEMARK OFFICE

#4

Glenn Patent Group
3475 Edison Way, Suite L
Menlo Park CA 94025
Tel: 650 474 8400
Fax 650 474 8401
Customer Number 22,862

Certificate of Transmission Under 37 C.F.R. §1.8
I hereby certify that this document and the documents referred to herein as attached are being transmitted via facsimile to the United States Patent and Trademark Office, Attn: Mail Stop Issue Fee, to facsimile number 703-746-4000 on the date listed below.

Date of Deposit:	8/17/2004	Name of Person Making the Deposit:	Rhonda Dunn	Signature of the Person Making the Deposit:	Rhonda Dunn

In re Application of: Tasler
Serial No.: 10/219,105
Filed: 8/15/2002

Docket No.: SCHO0102D
Art Unit: 2182
Examiner: Harold J. Kim

Title: Flexible Interface for Communication Between a Host and an Analog I/O Device Connected to the Interface Regardless the Type of the I/O Device

DATE: AUGUST 17, 2004

To: United States Patent and Trademark Office
Fax: (703) 746-4000
Attention: Box Issue Fee

Pages (including coversheet): 6

Attached to this facsimile coversheet please find the following documents:

- Issue Fee Authorization (1 sheet, In duplicate for accounting purposes);
- Fee Transmittal Part B (1 sheet);
- Change of Address (1 sheet); and
- Copy of Revocation of Prior and Grant of New Power of Attorney (1 sheet)

AUG 17 2004 JC40 PATENT & TRADEMARK OFFICE

Certificate of Transmission Under 37 C.F.R. §1.8 Date of Transmission 8/17/2004

I hereby certify that this document and the documents referred to herein as attached are being transmitted via facsimile to the United States Patent and Trademark Office, **Attn: Issue Fee,** to facsimile number (703) 746-4000 on the above indicated date of deposit.

Rhonda Dunn

IN THE UNITED STATES PATENT AND TRADEMARK OFFICE

In re Application of: Tasler **Docket No.:** SCHO0102D
Serial No. : 10/219,105 **Art Unit:** 2182
Filed: 8/15/2002 **Examiner:** Harold J. Kim
Title: Flexible Interface for Communication Between a Host and an Analog I/O Device Connected to the Interface Regardless the Type of the I/O Device

DATE: AUGUST 17, 2004

Assistant Commissioner for Patents
Mail Stop Issue Fee
P.O. Box 1450
Alexandria, VA 22313-1450

ISSUE FEE AUTHORIZATION

Dear Sir:

Enclosed for the above-referenced patent are the following:

1. Part B – Fee Transmittal (1 sheet);
2. Change of Correspondence Address (1 sheet); and
3. Copy of Revocation of Prior and Grant of New Power of Attorney (1 sheet)

The Commissioner is authorized to charge the Issue Fee of $665.00, the Publication fee of $300.00, the Advance Order fee of $30.00 for ten advance copies, and any additional fees, or credit any overpayments, to Deposit Account No. 07-1445 (Order No. SCHO0102D). A copy is enclosed for this purpose.

Respectfully submitted,

Michael Glenn
Reg. No. 30,176

Customer No. 22862

MISSING PAGE(S) FROM THE

U.S. PATENT OFFICE

OFFICIAL FILE WRAPPER

FAX pg. 3

Patent Imaging Corporation
Patent Legal and Scientific Information Service
2001 Jefferson Davis Highway
Crystal Plaza One, Suite 600
Arlington, VA 22202-3610
(703) 553-0000

RH

PTO/SB/21 (08-03)
Approved for use through 07/31/2003. OMB 0651-0031
U.S. Patent and Trademark Office; U.S. DEPARTMENT OF COMMERCE

OIPE
AUG 17 2004
PATENT & TRADEMARK OFFICE

PART B - FEE(S) TRANSMITTAL

Complete and send this form, together with applicable fee(s), to: Mail **Mail Stop ISSUE FEE**
Commissioner for Patents
P.O. Box 1450
Alexandria, Virginia 22313-1450
or Fax (703) 746-4000

INSTRUCTIONS: This form should be used for transmitting the ISSUE FEE and PUBLICATION FEE (if required). Blocks 1 through 4 should be completed where appropriate. All further correspondence including the Patent, advance orders and notification of maintenance fees will be mailed to the current correspondence address as indicated unless corrected below or directed otherwise in Block 1, by (a) specifying a new correspondence address; and/or (b) indicating a separate "FEE ADDRESS" for maintenance fee notifications.

CURRENT CORRESPONDENCE ADDRESS (Note: Legibly mark-up with any corrections or use Block 1)

24283 7590 05/20/2004

PATTON BOGGS
1660 LINCOLN ST
SUITE 1650
DENVER, CO 80264

Glenn Patent Group
3475 Edison Way
Suite L
Menlo Park, CA 94025

Note: A certificate of mailing can only be used for domestic mailings of the Fee(s) Transmittal. This certificate cannot be used for any other accompanying papers. Each additional paper, such as an assignment or formal drawing, must have its own certificate of mailing or transmission.

Certificate of Mailing or Transmission
I hereby certify that this Fee(s) Transmittal is being deposited with the United States Postal Service with sufficient postage for first class mail in an envelope addressed to the Mail Stop ISSUE FEE address above, or being facsimile transmitted to the USPTO, on the date indicated below.

Rhonda Dunn (Depositor's name)
Rhonda Dunn (Signature)
Aug. 17, 2004 (Date)

APPLICATION NO.	FILING DATE	FIRST NAMED INVENTOR	ATTORNEY DOCKET NO.	CONFIRMATION NO.
10/219,105	08/15/2002	Michael Tasler	13180-130D1 (150)	6042

SCH001200

TITLE OF INVENTION: FLEXIBLE INTERFACE FOR COMMUNICATION BETWEEN A HOST AND AN ANALOG I/O DEVICE CONNECTED TO THE INTERFACE REGARDLESS THE TYPE OF THE I/O DEVICE

APPLN. TYPE	SMALL ENTITY	ISSUE FEE	PUBLICATION FEE	TOTAL FEE(S) DUE	DATE DUE
nonprovisional	YES	$665	$300	$965	08/20/2004

EXAMINER	ART UNIT	CLASS-SUBCLASS
KIM, HAROLD J	2182	710-016000

1. Change of correspondence address or indication of "Fee Address" (37 CFR 1.363).
☒ Change of correspondence address (or Change of Correspondence Address form PTO/SB/122) attached.
☐ "Fee Address" indication (or "Fee Address" Indication form PTO/SB/47; Rev 03-02 or more recent) attached. Use of a Customer Number is required.

2. For printing on the patent front page, list (1) the names of up to 3 registered patent attorneys or agents OR, alternatively, (2) the name of a single firm (having as a member a registered attorney or agent) and the names of up to 2 registered patent attorneys or agents. If no name is listed, no name will be printed.
1 Glenn Patent Group
2 Michael A. Glenn
3

3. ASSIGNEE NAME AND RESIDENCE DATA TO BE PRINTED ON THE PATENT (print or type)

PLEASE NOTE: Unless an assignee is identified below, no assignee data will appear on the patent. Inclusion of assignee data is only appropriate when an assignment has been previously submitted to the USPTO or is being submitted under separate cover. Completion of this form is NOT a substitute for filing an assignment.

(A) NAME OF ASSIGNEE (B) RESIDENCE: (CITY and STATE OR COUNTRY)

Labortechnik Tasler GMBH Wuerzburg, Germany

Please check the appropriate assignee category or categories (will not be printed on the patent): ☐ individual ☒ corporation or other private group entity ☐ government

4a. The following fee(s) are enclosed:
☒ Issue Fee
☒ Publication Fee
☒ Advance Order - # of Copies 10

4b. Payment of Fee(s):
☐ A check in the amount of the fee(s) is enclosed.
☐ Payment by credit card. Form PTO-2038 is attached.
☒ The Director is hereby authorized by charge the required fee(s), or credit any overpayment, to Deposit Account Number 07-1445 (enclose an extra copy of this form).

Director for Patents is requested to apply the Issue Fee and Publication Fee (if any) or to re-apply any previously paid issue fee to the application identified above.

(Authorized Signature) (Date)
Michael A. Glenn, Reg. No. 30,176 8/17/04

NOTE: The Issue Fee and Publication Fee (if required) will not be accepted from anyone other than the applicant; a registered attorney or agent; or the assignee or other party in interest as shown by the records of the United States Patent and Trademark Office.

This collection of information is required by 37 CFR 1.311. The information is required to obtain or retain a benefit by the public which is to file (and by the USPTO to process) an application. Confidentiality is governed by 35 U.S.C. 122 and 37 CFR 1.14. This collection is estimated to take 12 minutes to complete, including gathering, preparing, and submitting the completed application form to the USPTO. Time will vary depending upon the individual case. Any comments on the amount of time you require to complete this form and/or suggestions for reducing this burden, should be sent to the Chief Information Officer, U.S. Patent and Trademark Office, U.S. Department of Commerce, Alexandria, Virginia 22313-1450. DO NOT SEND FEES OR COMPLETED FORMS TO THIS ADDRESS. SEND TO: Commissioner for Patents, Alexandria, Virginia 22313-1450.

Under the Paperwork Reduction Act of 1995, no persons are required to respond to a collection of information unless it displays a valid OMB control number.

08/18/2004 LWONDIM2 00000159 071445 10219105

01 FC:2501	665.00	DA
02 FC:1504	300.00	DA
03 FC:8001	30.00	DA

TRANSMIT THIS FORM WITH FEE(S)

OIPE
AUG 17 2004
PATENT & TRADEMARK OFFICE
JC40

PTO/SB/122 (06-03)
Approved for use through 11/30/2005. OMB 0651-0035
U.S. Patent and Trademark Office; U.S. DEPARTMENT OF COMMERCE
Under the Paperwork Reduction Act of 1995, no persons are required to respond to a collection of information unless it displays a valid OMB control number.

CHANGE OF CORRESPONDENCE ADDRESS
Application

Address to:
Commissioner for Patents
P.O. Box 1450
Alexandria, VA 22313-1450.

Application Number	10/219,105
Filing Date	8/15/2002
First Named Inventor	Tasler
Art Unit	2182
Examiner Name	Harold J. Kim
Attorney Docket Number	SCHO0102D

Please change the Correspondence Address for the above-identified patent application to:

[X] Customer Number: 22862

OR

[ ] Firm or Individual Name					
Address					
Address					
City		State		Zip	
Country					
Telephone		Fax			

This form cannot be used to change the data associated with a Customer Number. To change the data associated with an existing Customer Number use "Request for Customer Number Data Change" (PTO/SB/124).

I am the:

[ ] Applicant/Inventor

[ ] Assignee of record of the entire interest.
Statement under 37 CFR 3.73(b) is enclosed. (Form PTO/SB/96).

[X] Attorney or Agent of record. Registration Number 30,176

[ ] Registered practitioner named in the application transmittal letter in an application without an executed oath or declaration. See 37 CFR 1.33(a)(1). Registration Number:

Typed or Printed Name: August 17, 2004

Signature: /h/

Date August 17, 2004 Telephone 650-474-8400

NOTE: Signatures of all the inventors or assignees of record of the entire interest or their representative(s) are required. Submit multiple forms if more than one signature is required, see below*.

[ ] *Total of one forms are submitted.

This collection of information is required by 37 CFR 1.33. The information is required to obtain or retain a benefit by the public which is to file (and by the USPTO to process) an application. Confidentiality is governed by 35 U.S.C. 122 and 37 CFR 1.14. This collection is estimated to take 3 minutes to complete, including gathering, preparing, and submitting the completed application form to the USPTO. Time will vary depending upon the individual case. Any comments on the amount of time you require to complete this form and/or suggestions for reducing this burden, should be sent to the Chief Information Officer, U.S. Patent and Trademark Office, U.S. Department of Commerce, P.O. Box 1450, Alexandria, VA 22313-1450. DO NOT SEND FEES OR COMPLETED FORMS TO THIS ADDRESS. SEND TO: **Commissioner for Patents, P.O. Box 1450, Alexandria, VA 22313-1450.**

If you need assistance in completing the form, call 1-800-PTO-9199 and select option 2.

RH

AUG 17 2004 JC40 PATENT & TRADEMARK OFFICE

#4

IN THE UNITED STATES PATENT AND TRADEMARK OFFICE

In re application of: Michael Tasler, et al. Docket No. SCHO0102D
Serial No.: 10/219,105 Group Art Unit: Unassigned
Filed: 08/15/2002 Examiner: Unassigned
Title: Flexible Interface for Communication Between a Host and an Analog I/O Device Connected to the Interface...

BEST AVAILABLE COPY

Revocation of Prior and Grant of New Power of Attorney

As Assignee of record of the entire interest of the above-identified patents, all powers of attorney previously given are hereby revoked and the following attorneys and agents are hereby appointed to prosecute and transact all business in the U.S. Patent and Trademark Office connected therewith.

MICHAEL A. GLENN, Reg. No. 30,176
DONALD M. HENDRICKS, Reg. No. 40,355
KIRK WONG, Reg. No. 43,284
CHRISTOPHER PEIL, Reg. No. 45,005
JULIA THOMAS, Reg. No. 52,283

Please send all correspondence for this application as follows:

GLENN PATENT GROUP
3475 Edison Way, Suite L
Menlo Park, CA 94025
Please direct any calls to 650-474-8400.

Please change the Attorney Docket No. to SCHO0102D.

In accordance with 37 CFR 3.73, the assignee hereby certifies that the evidentiary documents with respect to its ownership have been reviewed and that, to the best of assignee's knowledge and belief, title is in the assignee seeking to take this action.

01/10/2003 Michael Tasler
Date Name: Michael Tasler
Title:

Match and Retur[illegible]

UNITED STATES PATENT AND TRADEMARK OFFICE

UNITED STATES DEPARTMENT OF COMMERCE
United States Patent and Trademark Office
Address: COMMISSIONER FOR PATENTS
P.O. Box 1450
Alexandria, Virginia 22313-1450
www.uspto.gov

APPLICATION NUMBER	FILING OR 371 (c) DATE	FIRST NAMED APPLICANT	ATTY. DOCKET NO./TITLE
10/219,105	08/15/2002	Michael Tasler	13189.129D1 (.150)

CONFIRMATION NO. 6042

GLENN PATENT GROUP
3475 EDISON WAY, SUITE L
MENLO PARK, CA 94025

OC000000014123568
OC000000014123568

#5

Date Mailed: 10/19/2004

NOTICE OF ACCEPTANCE OF POWER OF ATTORNEY

This is in response to the Power of Attorney filed 08/17/2004.

The Power of Attorney in this application is accepted. Correspondence in this application will be mailed to the above address as provided by 37 CFR 1.33.

NICOLE HALL
2100 (571) 272-3588

OFFICE COPY

	Search Text	DBs
1	("6470399").PN.	USPAT; EPO; JPO
2	710/8.ccls.	USPAT; EPO; JPO
3	710/16.ccls.	USPAT; EPO; JPO
4	710/321.ccls.	USPAT; EPO; JPO
5	709/321.ccls.	USPAT; EPO; JPO
6	709/220.ccls.	USPAT; EPO; JPO
7	709/222.ccls.	USPAT; EPO; JPO
8	710/11.ccls.	USPAT; EPO; JPO
9	710/12.ccls.	USPAT; EPO; JPO
10	710/115.ccls.	USPAT; EPO; JPO
11	710/62.ccls.	USPAT; EPO; JPO
12	710/63.ccls.	USPAT; EPO; JPO
13	710/64.ccls.	USPAT; EPO; JPO
14	703/23.ccls.	USPAT; EPO; JPO
15	703/24.ccls.	USPAT; EPO; JPO
16	703/25.ccls.	USPAT; EPO; JPO
17	2 and 3	USPAT; EPO; JPO
18	2 and 6	USPAT; EPO; JPO
19	2 and 7	USPAT; EPO; JPO
20	2 and 8	USPAT; EPO; JPO
21	2 and 9	USPAT; EPO; JPO
22	2 and 11	USPAT; EPO; JPO
23	2 and 12	USPAT; EPO; JPO
24	2 and 13	USPAT; EPO; JPO
25	2 and 14	USPAT; EPO; JPO
26	2 and 15	USPAT; EPO; JPO
27	2 and 16	USPAT; EPO; JPO
28	(driver with storage) same (virtual near2 system)	USPAT; EPO; JPO
29	(driver with storage) same (virtual near2 system) same directory	USPAT; EPO; JPO
30	(driver with storage with regardless) same (virtual near2 system)	USPAT; EPO; JPO
31	(driver with storage with inquiry) same (virtual near2 system)	USPAT; EPO; JPO
32	(driver with storage) same inquiry same (virtual near2 system)	USPAT; EPO; JPO

	Search Text	DBs
33	(driver with storage) same inquir$3 same (virtual near2 system)	USPAT; EPO; JPO
34	(driver with storage) same detect$4 same (virtual near2 system)	USPAT; EPO; JPO
35	(driver with storage) same monitor$4 same (virtual near2 system)	USPAT; EPO; JPO
36	(driver with storage) same monitor$4	USPAT; EPO; JPO
37	("6012113").PN.	USPAT; EPO; JPO
38	6012113.URPN.	USPAT
39	6470399.URPN.	USPAT
40	("4040014" | "4045774" | "4425625" | "4503288" | "4797878" | "4989203" | "5065427" | "5155847" | "5355365" | "5369700" | "5408527" | "5452329" | "5524047" | "5596628" | "5628030").PN.	USPAT
41	("4040014" | "4045774" | "4425625" | "4503288" | "4797878" | "4989203" | "5065427" | "5155847" | "5355365" | "5369700" | "5408527" | "5452329" | "5524047" | "5596628" | "5628030").PN.	USPAT
42	("5548783").PN.	USPAT; EPO; JPO
43	5548783.URPN.	USPAT

INSTRUCTIONS:

1. Make a checkmark beside each item IF/verific
2. If corrections are required, write r[illegible] to the e[illegible]ier or supervisor on reversed side.

10/29/10

1. FACE OF THE FILE

1. Printed and stamped serial number match bar code label.
2. Filing Date present..
3. Class/Subclass present
4. Applicant(s) name present.
5. Total no. of drawings present.
6. Total no. of claims present.
7. Total no. of Ind. Claims present
8. Filing fee received present
9. Mailing address present
10. Title of Invention present

2. CENTER OF THE FILE

A. DRAWINGS

1. None (go to B)
2. Serial No. present & correct on each sheet.
3. No. of sheets entered on line 4 of contents

B. SMALL ENTITY STATEMENT

1. None & not recorded on face of file (Go to C)
2. Statement present
3. Small entity recorded on face of file

C. DECLARATION OR OATH

1. Title matches face of file and specification
2. Declaration phrase present (I hereby declare all .....)
3. (Original and first Inventor or Inventors ...) Phrase present.
4. (Reviewed and understand the contents of the application including claims...) Phrase present.
5. (Acknowledge duty to disclose Information in accordance with 1.56(a)...) Phrase present.
6. Residence, citizenship, post office Address of all applicants present
7. Signed by all applicants
8. Less than 3 months before filing date, Or less than 6 months after filing date.

D. CLAIMS (as filed)

1. Completed form 1360 and 875
2. Circle Ind claims on the Index of
3. Draw line under the last claim number On the Index of Claims.

E. SPECIFICATION

1. Serial no. Pressent and correct
2. Specification in permanent ink.
3. Brief description of each drawing figure.
4. No missing or duplicate pages.
5. No holes punched in text.

F. ABSTRACT

1. None (go to G)
2. Serial no. Present nd correct
3. Abstract on separate page.
4. 25 lines or less.
5. One paragraph ONLY

G. PTO-1556

1. Present.

H. PRE-AMENDMENTS

1. None (go to I)
2. Enter on contents of filewrapper.
3. Instruction to cancel claims.
4. Claims canceled on Index of Claims.
5. Instruction to add claims.
6. Circle new independent claims on the Index of Claims.
7. Draw line under the new last claim number on Index of Claims.
8. Complete forms 1360 and 875.

I. PTO-948

1. Present.

3. RIGHT SIDE OF FILE

1. PALM File Data sheet present.
2. Transmittal letters pressent.
3. Forms 1360 and 875 present/entered
4. Miscellaneous Papers present/entered.
5. Petitions to Make Special present.
6. Drawing prints present (2 copies)

FEES

____ 1. Correct filing fee paid.
____ 2. Excess claims fees paid:
____ a. Excess total claims more than 20.
____ b. Excess independent claims more than 3.
____ c. First multiple dependent claim fee paid.
____ 3. Miscellaneous paper fee paid.

FINAL STEPS

____ 1. Sign and date center of filewrapper under flap.
____ 2. Docket to examiner.

NOTES TO SUPERVISOR:

NOTES TO EXAMINER:

SIGNATURE OF PREPARER: _____ DATE: 12-8-03

CLAIMS ONLY

SERIAL NO.	FILING DATE
10219105	08-15-02
APPLICANT(S)	

CLAIMS

	AS FILED		AFTER 1st AMENDMENT		AFTER 2nd AMENDMENT	
	IND.	DEP.	IND.	DEP.	IND.	DEP.
1						
2						
3						
4						
5						
6						
7						
8						
9						
10						
11						
12						
13						
14						
15						
16						
(17)	1					
18		1				
19		1				
20		1				
21		1				
22		1				
23		1				
24		1				
25		1				
26		1				
27		1				
28		1				
29		1				
30		1				
31		1				
32		1				
(33)	1					
(34)	1					
35						
36						
37						
38						
39						
40						
41						
42						
43						
44						
45						
46						
47						
48						
49						
50						
TOTAL IND.	3					
TOTAL DEP.	15					
TOTAL CLAIMS	18					

	*		*		*	
	IND.	DEP.	IND.	DEP.	IND.	DEP.
51						
52						
53						
54						
55						
56						
57						
58						
59						
60						
61						
62						
63						
64						
65						
66						
67						
68						
69						
70						
71						
72						
73						
74						
75						
76						
77						
78						
79						
80						
81						
82						
83						
84						
85						
86						
87						
88						
89						
90						
91						
92						
93						
94						
95						
96						
97						
98						
99						
100						
TOTAL IND.						
TOTAL DEP.						
TOTAL CLAIMS						

* MAY BE USED FOR ADDITIONAL CLAIMS OR ADMENDMENTS

U.S.DEPARTMENT OF COMMERCE
Patent and Trademark Office

FORM PTO-2022 (1-98)

*U.S. Government Printing Office: 1998 - 433-214/70303

PATENT APPLICATION FEE DETERMINATION RECORD

Effective October 1, 2001

Application or Docket Number: 3189.12901 (150)

CLAIMS AS FILED - PART I

	(Column 1)	(Column 2)
TOTAL CLAIMS	18	
FOR	NUMBER FILED	NUMBER EXTRA
TOTAL CHARGEABLE CLAIMS	18 minus 20=	*
INDEPENDENT CLAIMS	3 minus 3 =	*
MULTIPLE DEPENDENT CLAIM PRESENT		☐

* If the difference in column 1 is less than zero, enter "0" in column 2

SMALL ENTITY TYPE ☒		OR	OTHER THAN SMALL ENTITY	
RATE	FEE		RATE	FEE
BASIC FEE	370.00	OR	BASIC FEE	740.00
X$ 9=		OR	X$18=	
X42=		OR	X84=	
+140=		OR	+280=	
TOTAL	370	OR	TOTAL	

CLAIMS AS AMENDED - PART II

AMENDMENT A

	(Column 1) CLAIMS REMAINING AFTER AMENDMENT		(Column 2) HIGHEST NUMBER PREVIOUSLY PAID FOR	(Column 3) PRESENT EXTRA
Total	*	Minus	**	=
Independent	*	Minus	***	=
FIRST PRESENTATION OF MULTIPLE DEPENDENT CLAIM				☐

SMALL ENTITY		OR	OTHER THAN SMALL ENTITY	
RATE	ADDITIONAL FEE		RATE	ADDITIONAL FEE
X$ 9=		OR	X$18=	
X42=		OR	X84=	
+140=		OR	+280=	
TOTAL ADDIT. FEE		OR	TOTAL ADDIT. FEE	

AMENDMENT B

	(Column 1) CLAIMS REMAINING AFTER AMENDMENT		(Column 2) HIGHEST NUMBER PREVIOUSLY PAID FOR	(Column 3) PRESENT EXTRA
Total	*	Minus	**	=
Independent	*	Minus	***	=
FIRST PRESENTATION OF MULTIPLE DEPENDENT CLAIM				☐

RATE	ADDITIONAL FEE		RATE	ADDITIONAL FEE
X$ 9=		OR	X$18=	
X42=		OR	X84=	
+140=		OR	+280=	
TOTAL ADDIT. FEE		OR	TOTAL ADDIT. FEE	

AMENDMENT C

	(Column 1) CLAIMS REMAINING AFTER AMENDMENT		(Column 2) HIGHEST NUMBER PREVIOUSLY PAID FOR	(Column 3) PRESENT EXTRA
Total	*	Minus	**	=
Independent	*	Minus	***	=
FIRST PRESENTATION OF MULTIPLE DEPENDENT CLAIM				☐

RATE	ADDITIONAL FEE		RATE	ADDITIONAL FEE
X$ 9=		OR	X$18=	
X42=		OR	X84=	
+140=		OR	+280=	
TOTAL ADDIT. FEE		OR	TOTAL ADDIT. FEE	

* If the entry in column 1 is less than the entry in column 2, write "0" in column 3.
** If the "Highest Number Previously Paid For" IN THIS SPACE is less than 20, enter "20."
***If the "Highest Number Previously Paid For" IN THIS SPACE is less than 3, enter "3."
The "Highest Number Previously Paid For" (Total or Independent) is the highest number found in the appropriate box in column 1.

FORM PTO-375 (Rev. 8/01) *U.S. Government Printing Office: 2001 — 484-484/59268 Patent and Trademark Office, U.S. DEPARTMENT OF COMMERCE

SEARCH

Class	Sub.	Date	Exmr.
710	8		
	16		
	64		
	11		
	12		
	15	5/16/04	nk
	62		
	63		
703	23		
	24		
	25		
709	220		
	222		

SEARCH NOTES
(List databases searched. Attach search strategy inside.)

	Date	Exmr.
USPAT, JPO, EPO, NPL, IEEE See attached search report.	5/16/04	nk

INTERFERENCE SEARCHED

Class	Sub.	Date	Exmr.
710	16		
	8	5/16/04	nk
	64		
709	220		

ISSUE SLIP STAPLE AREA (for additional cross-references)

ISSUING CLASSIFICATION

ORIGINAL CLASS	ORIGINAL SUBCLASS	CROSS REFERENCE(S) CLASS	CROSS REFERENCE(S) SUBCLASS (ONE SUBCLASS PER BLOCK)
710	16	710	8 64
		709	220

INTERNATIONAL CLASSIFICATION

G	0	6	F	13 / 14
				1
				1
				1
				1

∧ Continued on Issue Slip Inside File Jacket

INDEX OF CLAIMS

✓ ..... Rejected – (Through numeral) ... Canceled N ..... Non-elected A ..... Appeal
= ..... Allowed + ... Restricted I ..... Interference O ..... Objected

Claim Final	Claim Original	Date 5/18/04	Claim Final	Claim Original	Date	Claim Final	Claim Original	Date
	1			51			101	
	2			52			102	
	3			53			103	
	4			54			104	
	5			55			105	
	6			56			106	
	7			57			107	
	8			58			108	
	9			59			109	
	10			60			110	
	11			61			111	
	12			62			112	
	13			63			113	
	14			64			114	
	15			65			115	
	16			66			116	
1	17	=		67			117	
2	18			68			118	
6	19			69			119	
7	20			70			120	
8	21			71			121	
9	22			72			122	
10	23			73			123	
11	24			74			124	
12	25			75			125	
13	26			76			126	
14	27			77			127	
3	28			78			128	
4	29			79			129	
5	30			80			130	
15	31			81			131	
16	32			82			132	
17	33			83			133	
18	34	=		84			134	
	35			85			135	
	36			86			136	
	37			87			137	
	38			88			138	
	39			89			139	
	40			90			140	
	41			91			141	
	42			92			142	
	43			93			143	
	44			94			144	
	45			95			145	
	46			96			146	
	47			97			147	
	48			98			148	
	49			99			149	
	50			100			150	

If more than 150 claims or 9 actions staple additional sheet here

50-6-201

10219105

J1050 U.S. PTO
10/219105
08/15/02

INITIALS

AUG 30 U2 45

CONTENTS

		Date Received (incl. C. of M.) or Date Mailed			Date Received (incl. C. of M.) or Date Mailed
1.	Application 2 papers.		31.		
2.	Pre-admt a	8-15-02	32.		
3.	Notice of allowability	5-20-04	33.		
4.	Power of Attorney	8-17-04	34.		
5.	Notice of Acceptance	10/19/04	35.		
6.			36.		
7.			37.		
8.			38.		
9.			39.		
10.			40.		
11.			41.		
12.			42.		
13.			43.		
14.			44.		
15.			45.		
16.			46.		
17.			47.		
18.			48.		
19.			49.		
20.			50.		
21.			51.		
22.			52.		
23.			53.		
24.			54.		
25.			55.		
26.			56.		
27.			57.		
28.			58.		
29.			59.		
30.			60.		