554. (Cancelled) ~~The system of claim 503, wherein at least one of the communications includes a human communication of sound.~~

555. (Previously presented) The system of claim 504, wherein at least one of the communications includes a human communication of sound.

556. (Previously presented) The system of claim 505, wherein at least one of the communications includes a human communication of sound.

557. (Previously presented) The system of claim 506, wherein at least one of the communications includes a human communication of sound.

558. (Previously presented) The system of claim 507, wherein at least one of the communications includes a human communication of sound.

559. (Previously presented) The system of claim 508, wherein at least one of the communications includes a human communication of sound.

560. (Previously presented) The system of claim 604, wherein the computer system is further programmed to determine whether neither of the first user identity and the second user identity is censored from the group.

561. (Previously presented) The system of claim 493, wherein the computer system is further programmed to determine whether neither of the first user identity and the second user identity is censored from the group.

Petitioner Microsoft Corporation, Ex. 1002, p. 3001

562. (Previously presented) The system of claim 494, wherein the computer system is further programmed to determine whether neither of the first user identity and the second user identity is censored from the group.

563. (Previously presented) The system of claim 495, wherein the computer system is further programmed to determine whether neither of the first user identity and the second user identity is censored from the group.

564. (Previously presented) The system of claim 496, wherein the computer system is further programmed to determine whether neither of the first user identity and the second user identity is censored from the group.

565. (Previously presented) The system of claim 497, wherein the computer system is further programmed to determine whether neither of the first user identity and the second user identity is censored from the group.

566. (Previously presented) The system of claim 498, wherein the computer system is further programmed to determine whether neither of the first user identity and the second user identity is censored from the group.

567. (Previously presented) The system of claim 499, wherein the computer system is further programmed to determine whether neither of the first user identity and the second user identity is censored from the group.

Petitioner Microsoft Corporation, Ex. 1002, p. 3002

568. (Previously presented) The system of claim 500, wherein the computer system is further programmed to determine whether neither of the first user identity and the second user identity is censored from the group.

569. (Previously presented) The system of claim 501, wherein the computer system is further programmed to determine whether neither of the first user identity and the second user identity is censored from the group.

570. (Previously presented) The system of claim 502, wherein the computer system is further programmed to determine whether neither of the first user identity and the second user identity is censored from the group.

571. (Cancelled) ~~The system of claim 503, wherein the computer system is further programmed to determine whether neither of the first user identity and the second user identity is censored from the group.~~

572. (Previously presented) The system of claim 504, wherein the computer system is further programmed to determine whether neither of the first user identity and the second user identity is censored from the group.

573. (Previously presented) The system of claim 505, wherein the computer system is further programmed to determine whether neither of the first user identity and the second user identity is censored from the group.

574. (Previously presented) The system of claim 506, wherein the computer

Petitioner Microsoft Corporation, Ex. 1002, p. 3003

system is further programmed to determine whether neither of the first user identity and the second user identity is censored from the group.

575. (Previously presented) The system of claim 507, wherein the computer system is further programmed to determine whether neither of the first user identity and the second user identity is censored from the group.

576. (Previously presented) The system of claim 508, wherein the computer system is further programmed to determine whether neither of the first user identity and the second user identity is censored from the group.

577. (Previously presented) The system of claim 604, wherein the computer system is further programmed to determine whether neither of the first user identity and the second user identity is censored from the group.

578. (Previously presented) The system of claim 604, wherein the computer system is further programmed to:

store, for the first user identity, an authorization associated with presentation of graphical data; and

based on the authorization, allow the graphical data to be presented at the output device corresponding to the second user identity.

579. (Previously presented) The system of claim 604, wherein the computer system is further programmed to:

provide the first user identity with access to a member-associated image

Petitioner Microsoft Corporation, Ex. 1002, p. 3004

corresponding to the second user identity.

580. (Previously presented) The system of claim 604, wherein the computer system is further programmed to:

determine whether the first user identity is censored from access to a member-associated image corresponding to the second user identity,

if the first user identity is censored, not allow access to the member-associated image, and

if the first user identity is not censored, allow access to the member-associated image.

581. (Previously presented) The system of claim 604, wherein the data represents a pointer that produces a pointer-triggered message on demand.

582. (Previously presented) The system of claim 493, wherein the pointer is a pointer that produces a pointer-triggered message on demand.

583. (Previously presented) The system of claim 498, wherein the pointer is a pointer that produces a pointer-triggered message on demand.

584. (Previously presented) The system of claim 499, wherein the pointer is a pointer that produces a pointer-triggered message on demand.

585. (Previously presented) The system of claim 500, wherein the pointer is a pointer that produces a pointer-triggered message on demand.

Petitioner Microsoft Corporation, Ex. 1002, p. 3005

586. (Previously presented) The system of claim 504, wherein the pointer is a pointer that produces a pointer-triggered message on demand.

587. (Previously presented) The system of claim 505, wherein the pointer is a pointer that produces a pointer-triggered message on demand.

588. (Previously presented) The system of claim 506, wherein the pointer is a pointer that produces a pointer-triggered message on demand.

589. (Previously presented) The system of claim 508, wherein the pointer is a pointer that produces a pointer-triggered message on demand.

590. (Previously presented) The system of claim 509, wherein the data represents a pointer that produces a pointer-triggered message on demand.

591. (Previously presented) The system of claim 510, wherein the pointer is a pointer that produces a pointer-triggered message on demand.

591. (Cancelled) ~~The system of claim 515, wherein the pointer is a pointer that produces a pointer-triggered message on demand.~~

592. (Previously presented) The system of claim 516, wherein the pointer is a pointer that produces a pointer-triggered message on demand.

Petitioner Microsoft Corporation, Ex. 1002, p. 3006

593. (Previously presented) The system of claim 517, wherein the pointer is a pointer that produces a pointer-triggered message on demand.

594. (Previously presented) The system of claim 521, wherein the pointer is a pointer that produces a pointer-triggered message on demand.

595. (Previously presented) The system of claim 522, wherein the pointer is a pointer that produces a pointer-triggered message on demand.

596. (Previously presented) The system of claim 523, wherein the pointer is a pointer that produces a pointer-triggered message on demand.

597. (Previously presented) The system of claim 525, wherein the pointer is a pointer that produces a pointer-triggered message on demand.

598. (Previously presented) The system of claim 526, wherein the data represents a pointer that produces a pointer-triggered message on demand.

599. (Withdrawn) A system to receive a communication via an Internet network, the system including:

a plurality of computers connected, responsive to each of the plurality of computers sending a respective login name and a password corresponding to a respective user identity, to a computer system;

a first of the plurality of computers being programmed to communicate to the computer system a message including a pointer pointing to a communication that includes data

Petitioner Microsoft Corporation, Ex. 1002, p. 3007

representing a video, a graphic, sound, or multimedia;

the computer system being programmed to communicate the message to a second of the plurality of computers; and

the second computer being programmed to receive the communication originating from the first computer, the communication being sent in real time and via the Internet network.

600. (Previously presented) The system of claim 527, wherein the pointer is a pointer that produces a pointer-triggered message on demand.

601. (Previously presented) The system of claim 532, wherein the pointer is a pointer that produces a pointer-triggered message on demand.

602. (Previously presented) The system of claim 533, wherein the pointer is a pointer that produces a pointer-triggered message on demand.

603. (Previously presented) The system of claim 534, wherein the pointer is a pointer that produces a pointer-triggered message on demand.

604. (Previously presented) An Internet network communications system, the system including:

a plurality of computers connected storing a set of privileges corresponding to said user identity, the set including a privilege to receive non-textual communication; and

responsive to each of the plurality of computers sending a respective login name and a password corresponding to a respective user identity, to a computer system programmed

Petitioner Microsoft Corporation, Ex. 1002, p. 3008

to:

form a group corresponding to a first of the user identities and a second of the user identities, each member of the group being capable of sending and receiving communications in real time, and

determine whether at least one of the first user identity and the second user identity, individually, is censored from sending data within the communications, the data representing at least one of a pointer, video, audio, a graphic, or multimedia,

wherein the plurality of computers receive in real time and via the Internet network the communications that are not censored based on the individual user identity and do not send the data that is censored based on the individual user identity.

605. (Previously presented) The system of claim 538, wherein the pointer is a pointer that produces a pointer-triggered message on demand.

606. (Previously presented) The system of claim 539, wherein the pointer is a pointer that produces a pointer-triggered message on demand.

607. (Previously presented) The system of claim 540, wherein the pointer is a pointer that produces a pointer-triggered message on demand.

608. (Previously presented) The system of claim 542, wherein the pointer is a pointer that produces a pointer-triggered message on demand.

609. (Previously presented) The system of claim 543, wherein the data represents a pointer that produces a pointer-triggered message on demand.

Petitioner Microsoft Corporation, Ex. 1002, p. 3009

610. (Previously presented) The system of claim 544, wherein the pointer is a pointer that produces a pointer-triggered message on demand.

611. (Previously presented) The system of claim 549, wherein the pointer is a pointer that produces a pointer-triggered message on demand.

612. (Previously presented) The system of claim 550, wherein the pointer is a pointer that produces a pointer-triggered message on demand.

613. (Previously presented) The system of claim 551, wherein the pointer is a pointer that produces a pointer-triggered message on demand.

614. (Previously presented) The system of claim 555, wherein the pointer is a pointer that produces a pointer-triggered message on demand.

615. (Previously presented) The system of claim 556, wherein the pointer is a pointer that produces a pointer-triggered message on demand.

616. (Previously presented) The system of claim 557, wherein the pointer is a pointer that produces a pointer-triggered message on demand.

617. (Previously presented) The system of claim 559, wherein the pointer is a pointer that produces a pointer-triggered message on demand.

Petitioner Microsoft Corporation, Ex. 1002, p. 3010

618. (Previously presented) The system of claim 560, wherein the data represents a pointer that produces a pointer-triggered message on demand.

619. (Previously presented) The system of claim 561, wherein the pointer is a pointer that produces a pointer-triggered message on demand.

620. (Previously presented) The system of claim 566, wherein the pointer is a pointer that produces a pointer-triggered message on demand.

621. (Previously presented) The system of claim 567, wherein the pointer is a pointer that produces a pointer-triggered message on demand.

622. (Previously presented) The system of claim 568, wherein the pointer is a pointer that produces a pointer-triggered message on demand.

623. (Previously presented) The system of claim 572, wherein the pointer is a pointer that produces a pointer-triggered message on demand.

624. (Previously presented) The system of claim 573, wherein the pointer is a pointer that produces a pointer-triggered message on demand.

625. (Previously presented) The system of claim 574, wherein the pointer is a pointer that produces a pointer-triggered message on demand.

626. (Previously presented) The system of claim 576, wherein the pointer is a

Petitioner Microsoft Corporation, Ex. 1002, p. 3011

pointer that produces a pointer-triggered message on demand.

627. (Previously presented) The system of claim 577, wherein the data represents a pointer that produces a pointer-triggered message on demand.

628. (Previously presented) The system of claim 578, wherein the data represents a pointer that produces a pointer-triggered message on demand.

629. (Previously presented) The system of claim 579, wherein the data represents a pointer that produces a pointer-triggered message on demand.

630. (Previously presented) The system of claim 580, wherein the data represents a pointer that produces a pointer-triggered message on demand.

631. (Currently amended) ~~The method of claim 165, further including: determining that the pointer is not censored~~ The system of claim 515, wherein the pointer is a pointer that produces a pointer-triggered message on demand.

632. (Withdrawn) The method of claim 165, further including:

determining that the message is not censored.

633. (Withdrawn) The method of claim 165, wherein the pointer is a pointer that causes the communication to be produced on demand.

634. (Withdrawn) The method of claim 165, wherein the communication

Petitioner Microsoft Corporation, Ex. 1002, p. 3012

includes data representing video.

635. (Withdrawn) The method of claim 165, wherein the communication includes data representing sound.

636. (Withdrawn) The method of claim 165, wherein the communication includes data representing sound and video.

637. (Withdrawn) The method of claim 165, wherein the communication includes data representing sound, and the sound includes a human communication of sound.

638. (Withdrawn) The method of claim 165, wherein the message includes data representing at least one of text or ascii.

639. (Withdrawn) The method of claim 165, wherein the communication includes data representing a member-associated image.

640. (Withdrawn) The method of claim 165, further including forming a chat channel via the Internet network, between at least two of the plurality of computers.

641. (Withdrawn) The method of claim 165, wherein at least one of the communicating steps includes communicating a message as an out-of-band communication.

642. (Withdrawn) The method of claim 165, further including:

determining a user age corresponding to each of the user identities.

Petitioner Microsoft Corporation, Ex. 1002, p. 3013

643. (Withdrawn) The method of claim 642, wherein the communication includes data representing sound.

644. (Withdrawn) The method of claim 642, wherein the communication includes data representing video.

645. (Withdrawn) The method of claim 642, wherein the communication includes data representing sound and video.

646. (Withdrawn) The method system of claim 642, wherein the communication includes data representing sound, and the sound includes a human communication of sound.

647. (Withdrawn) The method of claim 642, wherein the message includes data representing at least one of text or ascii.

648. (Withdrawn) The system of claim 599, wherein the computer system is further programmed to determine that the pointer is not censored.

649. (Withdrawn) The system of claim 599, wherein the computer system is further programmed to determine that the message is not censored.

650. (Withdrawn) The system of claim 599, wherein the pointer produces the communication on demand.

Petitioner Microsoft Corporation, Ex. 1002, p. 3014

651. (Withdrawn) The system of claim 599, wherein the communication includes data representing video.

652. (Withdrawn) The system of claim 599, wherein the communication includes data representing sound.

653. (Withdrawn) The system of claim 599, wherein the communication includes data representing sound and video.

654. (Withdrawn) The system of claim 599, wherein the communication includes data representing sound, and the sound includes a human communication of sound.

655. (Withdrawn) The system of claim 599, wherein the message includes data representing at least one of text or ascii..

656. (Withdrawn) The system of claim 599, wherein the communication includes data representing a member-associated image.

657. (Withdrawn) The system of claim 599, wherein the computer system is further programmed to form a chat channel via the Internet network, between at least two of the plurality of computers.

658. (Withdrawn) The system of claim 599, wherein the computer system is further programmed to communicate the message as an out-of-band communication message.

Petitioner Microsoft Corporation, Ex. 1002, p. 3015

659. (Withdrawn) The system of claim 599, wherein the computer system is further programmed to determine a user age corresponding to each of the user identities.

660. (Withdrawn) The system of claim 659, wherein the communication includes data representing sound.

661. (Withdrawn) The system of claim 659, wherein the communication includes data representing video.

662. (Withdrawn) The system of claim 659, wherein the communication includes data representing sound and video.

663. (Withdrawn) The system of claim 659, wherein the communication includes data representing sound, and the sound includes a human communication of sound.

664. (Withdrawn) The system of claim 659, wherein the message includes data representing at least one of text or ascii.

665. (Withdrawn) The authorizing, with said controller computer, invisible viewing of some of the communications method of claim 917, further including:

determining whether the pointer is not censored.

666. (Withdrawn) The method of claim 917, further including determining a user age corresponding to each of the user identities.

Petitioner Microsoft Corporation, Ex. 1002, p. 3016

667. (Withdrawn) The authorizing, with said controller computer, invisible viewing of some of the communications method of claim 666, further including:

determining whether the data is not censored.

668. (Withdrawn) The method of claim 917, wherein the pointer produces the communication on demand.

669. (Withdrawn) The method of claim 917, wherein the communication includes data representing video.

670. (Withdrawn) The method of claim 917, wherein the communication includes data representing sound.

671. (Withdrawn) The method of claim 917, wherein the communication includes data representing sound and video.

672. (Withdrawn) The method of claim 917, wherein the communication includes data representing sound, and the sound includes a human communication of sound.

673. (Withdrawn) The method of claim 917, wherein the communication includes data representing a member-associated image.

674. (Withdrawn) The method of claim 917, further including allowing chat communication in real time via the Internet network.

Petitioner Microsoft Corporation, Ex. 1002, p. 3017

675. (Withdrawn) The method of claim 917, further including communicating an out-of-band communication from the computer system to at least one of the plurality of computers.

676. (Withdrawn) The method of claim 917, further including communicating an asynchronous communication from the computer system to at least one of the plurality of computers.

677. (Withdrawn) The method of claim 917, wherein the step of receiving the communication includes receiving a synchronous communication.

678. (Withdrawn) The method of claim 677, wherein the communication includes data representing sound.

679. (Withdrawn) The method of claim 677, wherein the communication includes data representing video.

680. (Withdrawn) The method of claim 677, wherein the communication includes data representing sound and video.

681. (Withdrawn) The method of claim 677, wherein the communication includes data representing sound, and the sound includes a human communication of sound.

682. (Withdrawn) The method of claim 677, wherein the communication

Petitioner Microsoft Corporation, Ex. 1002, p. 3018

further includes data representing a member-associated image.

683. (Withdrawn) The method of claim 677, further including communicating an out-of-band communication from the computer system to at least one of the plurality of computers.

684. (Withdrawn) The method of claim 677, further including communicating an asynchronous communication from the computer system to at least one of the plurality of computers.

685. (Withdrawn) The system of claim 918, wherein the computer system is further programmed to determine whether the pointer is censored.

686. (Withdrawn) The system of claim 918, wherein the computer system is further programmed to determine whether the data is censored.

687. (Withdrawn) The system of claim 918, wherein the pointer produces the communication on demand.

688. (Withdrawn) The system of claim 918, wherein the communication includes data representing video.

689. (Withdrawn) The system of claim 918, wherein the communication includes data representing sound.

Petitioner Microsoft Corporation, Ex. 1002, p. 3019

690. (Withdrawn) The system of claim 918, wherein the communication includes data representing sound and video.

691. (Withdrawn) The system of claim 918, wherein the communication includes data representing sound, and the sound includes a human communication of sound.

692. (Withdrawn) The system of claim 918, wherein the first computer is further programmed to communicate with the pointer data representing at least one of text or asci.

693. (Withdrawn) The system of claim 918, wherein the data includes data representing a member-associated image.

694. (Withdrawn) The system of claim 918, wherein the computer system is further programmed to allow chat communication for sending user messages, and receiving the user messages in real time via the Internet network.

695. (Withdrawn) The system of claim 918, wherein the computer system is further programmed to communicate out-of-band communication.

696. (Withdrawn) The system of claim 918, wherein the communication comprises an asynchronous communication.

697. (Withdrawn) The system of claim 696, wherein the communication includes data representing sound.

Petitioner Microsoft Corporation, Ex. 1002, p. 3020

698. (Withdrawn) The system of claim 696, wherein the communication includes data representing video.

699. (Withdrawn) The system of claim 696, wherein the communication includes data representing sound and video.

700. (Withdrawn) The system of claim 696, wherein the communication includes data representing sound, and the sound includes a human communication of sound.

701. (Withdrawn) The system of claim 696, wherein the communication comprises an asynchronous communication.

702. (Withdrawn) The method of claim 409, further including

determining a user's age corresponding to at least one of user identities.

703. (Withdrawn) The method of claim 702, further including censoring an unwanted communication from at least one of the user identities.

704. (Withdrawn) The method of claim 703, further including determining whether a first of the user identities is censored from access to the member-associated image corresponding to a second user identity,

if the first identity is censored, not allowing access to the member-associated, and

if the first user identity is not censored, allowing access to the member

Petitioner Microsoft Corporation, Ex. 1002, p. 3021

associated image.

705. (Withdrawn) The method of claim 702, further including:

communicating, under control of said computer system, an asynchronous message from one of the plurality of computers to another of the plurality of computers.

706. (Withdrawn) The method of claim 702, wherein the receiving includes receiving chat communications within a chat group.

707. (Withdrawn) The method of claim 702, further including providing a private communications channel to at least some of the plurality of computers.

708. (Withdrawn) The method of claim 702, further including communicating data representing human communication of sound to at least some of the plurality of computers.

709. (Withdrawn) The method of claim 702, further including providing data representing video to at least some of the plurality of computers.

710. (Withdrawn) The method of claim 702, further including providing data representing sound to at least some of the plurality of computers.

711. (Withdrawn) The method of claim 702, wherein at least some of the communications include data representing text or ascii.

Petitioner Microsoft Corporation, Ex. 1002, p. 3022

712. (Withdrawn) The method of claim 702, wherein at least some of the communications are communicated out-of-band.

713. (Withdrawn) The method of claim 702, wherein at least some of the communications include data representing multimedia.

714. (Withdrawn) The system of claim 843, wherein the computer system is further programmed to determine a user age corresponding to each said user identity.

715. (Withdrawn) The system of claim 714, wherein the computer system is further programmed to censor an unwanted communication from a member.

716. (Withdrawn) The system of claim 714, wherein the computer system is further programmed to determine whether a first of the user identities is censored from access to a member-associated image corresponding to a second of the user identities,

if the first user identity is censored, not allowing access to the member-associated, and

if the first user identity is not censored, allowing access to the member associated image.

717. (Withdrawn) The system of claim 714, wherein the computer system is further programmed to communicate an asynchronous message from one of the plurality of computers to another of the plurality of computers.

718. (Withdrawn) The system of claim 714, wherein the computer system is

Petitioner Microsoft Corporation, Ex. 1002, p. 3023

further programmed to distribute the at least some of the communications among a chat group.

719. (Withdrawn) The system of claim 714, wherein the computer system is further programmed to provide a private communication channel to at least some of the plurality of computers.

720. (Withdrawn) The system of claim 714, wherein the computer system is further programmed to communicate data representing human communication of sound to at least some of the plurality of computers.

721. (Withdrawn) The system of claim 714, wherein the computer system is further programmed to provide data representing video to at least some of the plurality of computers.

722. (Withdrawn) The system of claim 714, wherein the computer system is further programmed to provide data representing video and sound to at least some of the plurality of computers.

723. (Withdrawn) The system of claim 714, wherein at least some of the communications include data representing text or asci.

724. (Withdrawn) The system of claim 714, wherein the computer system is further programmed to communicate out-of-band communication.

725. (Withdrawn) The system of claim 714, wherein at least some of the

Petitioner Microsoft Corporation, Ex. 1002, p. 3024

communications include multimedia.

726. (Previously presented) The method of claim 884, wherein at least one of the communications includes data representing sound.

727. (Previously presented) The method of claim 884, wherein at least one of the communications includes data representing video.

728. (Previously presented) The method of claim 884, wherein at least one of the communications includes data representing sound and video.

729. (Previously presented) The method of claim 884, further including:

storing, for the first user identity, an authorization associated with presentation of graphical multimedia; and

based on the authorization, presenting the graphical multimedia at one of the plurality of computers corresponding to the second user identity.

730. (Previously presented) The method of claim 726, further including:

storing, for the first user identity, an authorization associated with presentation of graphical multimedia; and

based on the authorization, presenting the graphical multimedia at one of the plurality of computers corresponding to the second user identity.

731. (Previously presented) The method of claim 727, further including:

storing, for the first user identity, an authorization associated with presentation of

Petitioner Microsoft Corporation, Ex. 1002, p. 3025

graphical multimedia; and

based on the authorization, presenting the graphical multimedia at one of the plurality of computers corresponding to the second user identity.

732. (Previously presented) The method of claim 884 based on the authorization, presenting the graphical multimedia data at the output device corresponding to the second user identity wherein one of the determining steps includes determining whether a parameter corresponding to the first user identity has been determined by a user corresponding to another of the user identities.

733. (Previously presented) The method of claim 729, wherein the graphical data includes graphical multimedia data.

734. (Previously presented) The method of claim 885, wherein at least one of the communications includes data representing sound.

735. (Previously presented) The method of claim 885, wherein at least one of the communications includes data representing video.

736. (Previously presented) The method of claim 885, wherein at least one of the communications includes data representing sound and video.

737. (Previously presented) The method of claim 885, further including:

storing, for the first user identity, an authorization associated with presentation of graphical multimedia; and

Petitioner Microsoft Corporation, Ex. 1002, p. 3026

based on the authorization, presenting the graphical multimedia at one of the plurality of computers corresponding to the second user identity.

738. (Previously presented) The method of claim 734, further including:

storing, for the first user identity, an authorization associated with presentation of graphical multimedia; and

based on the authorization, presenting the graphical multimedia at one of the plurality of computers corresponding to the second user identity.

739. (Previously presented) The method of claim 735, further including:

storing, for the first user identity, an authorization associated with presentation of graphical multimedia; and

based on the authorization, presenting the graphical multimedia at one of the plurality of computers corresponding to the second user identity.

740. (Previously presented) The method of claim 736, further including:

storing, for the first user identity, an authorization associated with presentation of graphical data; and

based on the authorization, presenting the graphical data at one of the plurality of computers corresponding to the second user identity.

741. (Previously presented) The system of claim 891, wherein at least one of the communications includes data representing sound.

742. (Previously presented) The system of claim 891, wherein at least one of

Petitioner Microsoft Corporation, Ex. 1002, p. 3027

the communications includes data representing video.

743. (Previously presented) The system of claim 891, wherein at least one of the communications includes data representing sound and video.

744. (Previously presented) The system of claim 891, wherein the computer system is further programmed to provide the computer corresponding to the first user identity with access to a member-associated image corresponding to the second user identity.

745. (Previously presented) The system of claim 741, wherein the computer system is further programmed to provide the computer corresponding to the first user identity with access to a member-associated image corresponding to the second user identity.

746. (Previously presented) The system of claim 742, wherein the computer system is further programmed to provide the computer corresponding to the first user identity with access to a member-associated image corresponding to the second user identity.

747. (Previously presented) The system of claim 743, wherein the computer system is further programmed to provide the computer corresponding to the first user identity with access to a member-associated image corresponding to the second user identity.

748. (Previously presented) The system of claim 892, wherein at least one of the communications includes data representing sound.

749. (Previously presented) The system of claim 892, wherein at least one of

Petitioner Microsoft Corporation, Ex. 1002, p. 3028

the communications includes data representing video.

750. (Previously presented) The system of claim 892, wherein at least one of the communications includes data representing sound and video.

751. (Previously presented) The system of claim 892, wherein the computer system is further programmed to provide the computer corresponding to the first user identity with access to a member-associated image corresponding to the second user identity.

752. (Previously presented) The system of claim 748, wherein the computer system is further programmed to provide the computer corresponding to the first user identity with access to a member-associated image corresponding to the second user identity.

753. (Previously presented) The system of claim 749, wherein the computer system is further programmed to provide the computer corresponding to the first user identity with access to a member-associated image corresponding to the second user identity.

754. (Previously presented) The system of claim 750, wherein the computer system is further programmed to provide the computer corresponding to the first user identity with access to a member-associated image corresponding to the second user identity.

755. (Withdrawn) The method of claim 893, wherein at least one of the multimedia messages includes data representing sound.

756. (Withdrawn) The method of claim 893, wherein at least one of the

Petitioner Microsoft Corporation, Ex. 1002, p. 3029

multimedia messages includes data representing video.

757. (Withdrawn) The method of claim 893, wherein at least one of the multimedia messages includes data representing sound and video.

758. (Withdrawn) The method of claim 893, further including:

storing, for the first user identity, an authorization associated with presentation of graphical multimedia; and

based on the authorization, presenting the graphical multimedia at one of the plurality of computers corresponding to the second user identity.

759. (Withdrawn) The method of claim 755, further including:

storing, for the first user identity, an authorization associated with presentation of graphical multimedia; and

based on the authorization, presenting the graphical multimedia at one of the plurality of computers corresponding to the second user identity.

760. (Withdrawn) The method of claim 756, further including:

storing, for the first user identity, an authorization associated with presentation of graphical multimedia; and

based on the authorization, presenting the graphical multimedia at one of the plurality of computers corresponding to the second user identity.

761. (Withdrawn) The method of claim 757, further including:

storing, for the first user identity, an authorization associated with presentation of

Petitioner Microsoft Corporation, Ex. 1002, p. 3030

graphical multimedia; and

based on the authorization, presenting the graphical multimedia at one of the plurality of computers corresponding to the second user identity.

762. (Withdrawn) The method of claim 894, wherein the data includes data representing sound.

763. (Withdrawn) The method of claim 894, wherein the data includes data representing video.

764. (Withdrawn) The method of claim 894, the data includes data representing sound and video.

765. (Withdrawn) The method of claim 894, further including:

storing, for the first user identity, an authorization associated with presentation of graphical multimedia; and

based on the authorization, presenting the graphical multimedia at one of the plurality of computers corresponding to the second user identity.

766. (Withdrawn) The method of claim 762, further including:

storing, for the first user identity, an authorization associated with presentation of graphical multimedia; and

based on the authorization, presenting the graphical multimedia at one of the plurality of computers corresponding to the second user identity.

Petitioner Microsoft Corporation, Ex. 1002, p. 3031

767. (Withdrawn) The method of claim 763, further including:

storing, for the first user identity, an authorization associated with presentation of graphical multimedia; and

based on the authorization, presenting the graphical multimedia at one of the plurality of computers corresponding to the second user identity.

768. (Withdrawn) The method of claim 764, further including:

storing, for the first user identity, an authorization associated with presentation of graphical multimedia; and

based on the authorization, presenting the graphical multimedia at one of the plurality of computers corresponding to the second user identity.

769. (Withdrawn) The system of claim 895, wherein at least one of the communications includes data representing sound.

770. (Withdrawn) The system of claim 895, wherein at least one of the communications includes data representing video.

771. (Withdrawn) The system of claim 895, wherein at least one of the communications includes data representing sound and video.

772. (Withdrawn) The system of claim 895, wherein the computer system is further programmed to provide the computer corresponding to the first user identity with access to a member-associated image corresponding to the second user identity.

Petitioner Microsoft Corporation, Ex. 1002, p. 3032

773. (Withdrawn) The system of claim 769, wherein the computer system is further programmed to provide the computer corresponding to the first user identity with access to a member-associated image corresponding to the second user identity.

774. (Withdrawn) The system of claim 770, wherein the computer system is further programmed to provide the computer corresponding to the first user identity with access to a member-associated image corresponding to the second user identity.

775. (Withdrawn) The system of claim 771, wherein the computer system is further programmed to provide the computer corresponding to the first user identity with access to a member-associated image corresponding to the second user identity.

776. (Withdrawn) The system of claim 896, wherein at least one of the communications includes data representing sound.

777. (Withdrawn) The system of claim 896, wherein at least one of the communications includes data representing video.

778. (Withdrawn) The system of claim 896, wherein at least one of the communications includes data representing sound and video.

779. (Withdrawn) The system of claim 896, wherein the computer system is further programmed to:

store, for the first user identity, an authorization associated with presentation of graphical data; and

Petitioner Microsoft Corporation, Ex. 1002, p. 3033

based on the authorization, present the graphical data at one of the plurality of computers corresponding to the second user identity.

780. (Withdrawn) The system of claim 776, wherein the computer system is further programmed to:

store, for the first user identity, an authorization associated with presentation of graphical data; and

based on the authorization, present the graphical data at one of the plurality of computers corresponding to the second user identity.

781. (Withdrawn) The system of claim 777, wherein the computer system is further programmed to:

store, for the first user identity, an authorization associated with presentation of graphical data; and

based on the authorization, present the graphical data at one of the plurality of computers corresponding to the second user identity.

782. (Withdrawn) The system of claim 778, wherein the computer system is further programmed to:

store, for the first user identity, an authorization associated with presentation of graphical data; and

based on the authorization, present the graphical data at one of the plurality of computers corresponding to the second user identity.

783. (Withdrawn) The system of claim 871, wherein the computer system is

Petitioner Microsoft Corporation, Ex. 1002, p. 3034

programmed to allow the plurality of computers to communicate a type of data representing at least one of a pointer, video, audio, a graphic, or multimedia, the pointer being a pointer that produces a pointer-triggered message on demand.

784. (Withdrawn) The system of claim 783, wherein the type of data represents a pointer.

785. (Withdrawn) The system of claim 783, wherein the type of data represents audio.

786. (Withdrawn) The system of claim 783, wherein the type of data represents video.

787. (Withdrawn) The system of claim 783, wherein the type of data represents a graphic.

788. (Withdrawn) The system of claim 783, wherein the type of data represents multimedia.

789. (Withdrawn) The system of claim 783, wherein the type of data represents a pointer and audio.

790. (Withdrawn) The system of claim 783, wherein the type of data represents a pointer and video.

Petitioner Microsoft Corporation, Ex. 1002, p. 3035

791. (Withdrawn) The system of claim 783, wherein the type of data represents a pointer and a graphic.

792. (Withdrawn) The system of claim 783, wherein the type of data represents audio and video.

793. (Withdrawn) The system of claim 783, wherein the type of data represents audio and a graphic.

794. (Withdrawn) The system of claim 783, wherein the type of data represents video and a graphic.

795. (Withdrawn) The system of claim 783, wherein the type of data represents a pointer and audio and video.

796. (Withdrawn) The system of claim 783, wherein the type of data represents a pointer and audio and a graphic.

797. (Withdrawn) The system of claim 783, wherein the type of data represents a pointer and video and a graphic.

798. (Withdrawn) The system of claim 783, wherein the type of data represents audio and video and a graphic.

799. (Withdrawn) The system of claim 783, wherein the type of data

Petitioner Microsoft Corporation, Ex. 1002, p. 3036

represents a pointer and audio and video and a graphic.

800. (Withdrawn) The system of claim 871, wherein the computer system is further programmed to provide access to a member-associated image.

801. (Withdrawn) The system of claim 783, wherein the computer system is further programmed to provide access to a member-associated image.

802. (Withdrawn) The system of claim 784, wherein the computer system is further programmed to provide access to a member-associated image.

803. (Withdrawn) The system of claim 785, wherein the computer system is further programmed to provide access to a member-associated image.

804. (Withdrawn) The system of claim 786, wherein the computer system is further programmed to provide access to a member-associated image.

805. (Withdrawn) The system of claim 787, wherein the computer system is further programmed to provide access to a member-associated image.

806. (Withdrawn) The system of claim 788, wherein the computer system is further programmed to provide access to a member-associated image.

807. (Withdrawn) The system of claim 789, wherein the computer system is further programmed to provide access to a member-associated image.

Petitioner Microsoft Corporation, Ex. 1002, p. 3037

808. (Withdrawn) The system of claim 790, wherein the computer system is further programmed to provide access to a member-associated image.

809. (Withdrawn) The system of claim 791, wherein the computer system is further programmed to provide access to a member-associated image.

810. (Withdrawn) The system of claim 792, wherein the computer system is further programmed to provide access to a member-associated image.

811. (Withdrawn) The system of claim 793, wherein the computer system is further programmed to provide access to a member-associated image.

812. (Withdrawn) The system of claim 794, wherein the computer system is further programmed to provide access to a member-associated image.

813. (Withdrawn) The system of claim 795, wherein the computer system is further programmed to provide access to a member-associated image..

814. (Withdrawn) The system of claim 796, wherein the computer system is further programmed to provide access to a member-associated image.

815. (Withdrawn) The system of claim 797, wherein the computer system is further programmed to provide access to a member-associated image.

Petitioner Microsoft Corporation, Ex. 1002, p. 3038

816. (Withdrawn) The system of claim 798, wherein the computer system is further programmed to provide access to a member-associated image.

817. (Withdrawn) The system of claim 799, wherein the computer system is further programmed to provide access to a member-associated image.

818. (Previously presented) The method of claim 876, further including:

responsive to the allowing the plurality of computers to communicate, receiving communications, at least one of the plurality of computers, the communications including data representing at least one of a pointer, video, audio, a graphic, or multimedia.

819. (Previously presented) The method of claim 818, wherein the data represents a pointer.

820. (Previously presented) The method of claim 818, wherein the data represents audio.

821. (Previously presented) The method of claim 818, wherein the data represents video.

822. (Previously presented) The method of claim 818, wherein the data represents a graphic.

823. (Previously presented) The method of claim 818, wherein the data represents multimedia.

Petitioner Microsoft Corporation, Ex. 1002, p. 3039

824. (Previously presented) The method of claim 818, wherein the data represents a pointer and audio.

825. (Previously presented) The method of claim 818, wherein the data represents a pointer and video.

826. (Previously presented) The method of claim 818, wherein the data represents a pointer and a graphic.

827. (Previously presented) The method of claim 818, wherein the data represents audio and video.

828. (Previously presented) The method of claim 818, wherein the data represents audio and a graphic.

829. (Previously presented) The method of claim 818, wherein the data represents video and a graphic.

830. (Previously presented) The method of claim 818, wherein the data represents a pointer and audio and video.

831. (Previously presented) The method of claim 818, wherein the data represents a pointer and audio and a graphic.

Petitioner Microsoft Corporation, Ex. 1002, p. 3040

832. (Previously presented) The method of claim 818, wherein the data represents a pointer and video and a graphic.

833. (Previously presented) The method of claim 818, wherein the data represents audio and video and a graphic.

834. (Previously presented) The method of claim 818, wherein the data represents a pointer and audio and video and a graphic.

835. (Previously presented) The method of claim 818, wherein the data represents a pointer that produces a pointer-triggered message on demand.

836. (Previously presented) The method of claim 819, wherein the pointer is a pointer that produces a pointer-triggered message on demand.

837. (Previously presented) The method of claim 824, wherein the pointer is a pointer that produces a pointer-triggered message on demand.

838. (Previously presented) The method of claim 825, wherein the pointer is a pointer that produces a pointer-triggered message on demand.

839. (Previously presented) The method of claim 826, wherein the pointer is a pointer that produces a pointer-triggered message on demand.

840. (Previously presented) The method of claim 830, wherein the pointer is a

Petitioner Microsoft Corporation, Ex. 1002, p. 3041

pointer that produces a pointer-triggered message on demand.

841. (Previously presented) The method of claim 831, wherein the pointer is a pointer that produces a pointer-triggered message on demand.

842. (Previously presented) The method of claim 832, wherein the pointer is a pointer that produces a pointer-triggered message on demand.

843. (Withdrawn) A communications system to distribute communication over an Internet network, the system including:

a plurality of participator computers connected, responsive to each of the plurality of computers sending a respective login name and a password corresponding to a respective user identity, to a computer system programmed to:

determine which of the plurality of computers can communicate communications with an other of the plurality of computers, wherein at least some of the communications are in real time via the Internet network, and

provide a member-associated image and member identity information respectively corresponding to one of the user identities to at least some of the plurality of computers.

844. (Previously presented) The method of claim 834, wherein the pointer is a pointer that produces a pointer-triggered message on demand.

845. (Previously presented) The system of claim 877, wherein the computer system is further programmed to:

Petitioner Microsoft Corporation, Ex. 1002, p. 3042

send and receive communications between members in a group, the communications including data representing at least one of video, sound, a graphic, or multimedia, and

receive the communications in real time via the Internet network.

846. (Previously presented) The system of claim 845, wherein the data includes data representing sound.

847. (Previously presented) The system of claim 845, wherein the data includes data representing video.

848. (Previously presented) The system of claim 845, wherein the data includes data representing sound and video.

849. (Previously presented) The system of claim 845, wherein the computer system is further programmed to provide the computer corresponding to the first user identity with access to a member-associated image corresponding to the second user identity.

850. (Previously presented) The system of claim 846, wherein the computer system is further programmed to provide the computer corresponding to the first user identity with access to a member-associated image corresponding to the second user identity.

851. (Previously presented) The system of claim 847, wherein the computer system is further programmed to provide the computer corresponding to the first user identity with access to a member-associated image corresponding to the second user identity.

Petitioner Microsoft Corporation, Ex. 1002, p. 3043

852. (Previously presented) The system of claim 848, wherein the computer system is further programmed to provide the computer corresponding to the first user identity with access to a member-associated image corresponding to the second user identity.

853. (Previously presented) The method of claim 878, further including sending and receiving communications between members in a group, the communications including data representing at least one of video, sound, a graphic, or multimedia, the receiving in real time via the Internet network.

854. (Previously presented) The method of claim 853, wherein the data represents sound.

855. (Previously presented) The method of claim 853, wherein the data represents video.

856. (Previously presented) The method of claim 853, wherein the data represents sound and video.

857. (Previously presented) The method of claim 878, further including sending and receiving communications between members in a group, the communications including data representing a member-associated image, sound, and video.

858. (Previously presented) The method of claim 878, further including:

store, for the first user identity, an authorization associated with presentation of

Petitioner Microsoft Corporation, Ex. 1002, p. 3044

graphical multimedia; and

based on the authorization, present the graphical multimedia at one of the plurality of computers corresponding to the second user identity.

859. (Previously presented) The method of claim 853, further including:

store, for the first user identity, an authorization associated with presentation of graphical multimedia; and

based on the authorization, present the graphical multimedia at one of the plurality of computers corresponding to the second user identity.

860. (Previously presented) The method of claim 854, further including:

store, for the first user identity, an authorization associated with presentation of graphical multimedia; and

based on the authorization, present the graphical multimedia at one of the plurality of computers corresponding to the second user identity.

861. (Previously presented) The method of claim 855, further including:

store, for the first user identity, an authorization associated with presentation of graphical multimedia; and

based on the authorization, present the graphical multimedia at one of the plurality of computers corresponding to the second user identity.

862. (Withdrawn) The method of claim 901, wherein at least one of the multimedia messages includes data representing sound.

Petitioner Microsoft Corporation, Ex. 1002, p. 3045

863. (Withdrawn) The method of claim 901, wherein at least one of the multimedia messages includes data representing video.

864. (Withdrawn) The method of claim 901, wherein at least one of the multimedia messages includes data representing sound and video.

865. (Withdrawn) The method of claim 901, further including:

storing, for the first user identity, an authorization associated with presentation of graphical multimedia; and

based on the authorization, presenting the graphical multimedia at one of the plurality of computers corresponding to the second user identity.

866. (Withdrawn) The method of claim 862, further including:

storing, for the first user identity, an authorization associated with presentation of graphical multimedia; and

based on the authorization, presenting the graphical multimedia at one of the plurality of computers corresponding to the second user identity.

867. (Withdrawn) The method of claim 863, further including:

storing, for the first user identity, an authorization associated with presentation of graphical multimedia; and

based on the authorization, presenting the graphical multimedia at one of the plurality of computers corresponding to the second user identity.

868. (Withdrawn) The method of claim 864, further including:

Petitioner Microsoft Corporation, Ex. 1002, p. 3046

storing, for the first user identity, an authorization associated with presentation of graphical multimedia; and

based on the authorization, presenting the graphical multimedia at one of the plurality of computers corresponding to the second user identity.

869. (Withdrawn) The system of claim 902, wherein at least one of the multimedia messages includes data representing sound.

870. (Withdrawn) The system of claim 902, wherein at least one of the multimedia messages includes data representing video.

871. (Withdrawn) An Internet network system, the system including:

a plurality of computers connected, responsive to each of the plurality of computers sending a respective login name and a password corresponding to a respective user identity, to a computer system programmed to:

store, for a first of the user identities, a respective authorization associated with graphical data, and

allow the plurality of computers to communicate in real time via the Internet network, and based on the authorization, cause the graphical data to be presented at one of the plurality of computers corresponding to a second of the user identities.

872. (Withdrawn) The system of claim 902, wherein at least one of the multimedia messages includes data representing sound and video.

873. (Withdrawn) The system of claim 902, wherein the computer system is

Petitioner Microsoft Corporation, Ex. 1002, p. 3047

further programmed to provide the computer corresponding to the first user identity with access to a member-associated image corresponding to the second user identity.

874. (Withdrawn) The system of claim 869, wherein the computer system is further programmed to provide the computer corresponding to the first user identity with access to a member-associated image corresponding to the second user identity.

875. (Withdrawn) The system of claim 870, wherein the computer system is further programmed to provide the computer corresponding to the first user identity with access to a member-associated image corresponding to the second user identity.

876. (Previously presented) A method of communicating over an Internet network, the method including:

connecting a plurality of computers, responsive to each of the plurality of computers sending a respective login name and password corresponding to a respective user identity, to a computer system;

storing, for a first of the user identities, a respective authorization allowing or disallowing presentment of graphical multimedia; and

allowing the plurality of computers to communicate in real time via the Internet network, and based on the authorization, presenting the graphical multimedia at one of the plurality of computers corresponding to a second of the user identities.

877. (Previously presented) An Internet network communication system, the system including:

a plurality of computers, each of the plurality of computers being connected to a

Petitioner Microsoft Corporation, Ex. 1002, p. 3048

respective input device and to a respective output device, the plurality of computers being connected, responsive to each of the plurality of computers sending a respective login name and password corresponding to a respective user identity, to a computer system programmed to:

respond to one of the plurality of the computers communicating a pointer in real time and via the Internet, wherein the pointer is a pointer that produces a pointer-triggered message on demand, by determining whether a first of the user identities is censored from content in the pointer-triggered message,

if the content is censored, disallow the pointer-triggered message from being presented at the output device of the computer corresponding to the first of the user identity, and

if the content is not censored, allow the pointer-triggered message to be presented at the output device of the computer corresponding to the first of the user identities.

878. (Previously presented) A method of communicating via an Internet network, the method including:

sending a respective login name and password corresponding to a respective user identity;

after the sending, connecting a plurality of computers to a computer system, each of the plurality of computers being connected to a respective input device and to a respective output device;

responsive to at least one of the plurality of computers communicating a pointer in real time and via the Internet, the pointer producing a pointer-triggered message on demand, determining whether a first of the user identities is censored from content in the pointer-triggered message;

Petitioner Microsoft Corporation, Ex. 1002, p. 3049

if the content is censored, disallowing the pointer-triggered message to be presented at the output device of the computer corresponding to the first of the user identities; and

if the content is not censored, allowing the pointer-triggered message to be presented at the output device of the computer corresponding to the first of the user identities.

879. (Withdrawn) The system of claim 872, wherein the computer system is further programmed to provide the computer corresponding to the first user identity with access to a member-associated image corresponding to the second user identity.

880. (Previously presented) The system of claim 909, wherein the at least one type includes at least one of text or ascii.

881. (Previously presented) The system of claim 909, wherein the at least one type includes audio.

882. (Previously presented) The system of claim 909, wherein the at least one type includes video.

883. (Previously presented) The system of claim 909, wherein the at least one type includes a graphic.

884. (Previously presented) A method of communicating via an Internet network, the method including:

sending a respective login name and password corresponding to a respective

Petitioner Microsoft Corporation, Ex. 1002, p. 3050

user identity;

after the sending, connecting a plurality of computers to a computer system, each of the plurality of computers being connected to a respective input device and to a respective output device;

determining whether at least one of a first user identity and a second user identity, individually, is censored from receiving data comprising a pointer in communications that include at least one of text or ascii, the pointer being a pointer that produces a pointer-triggered message on demand;

determining whether the first and the second of the user identities are able to form a group; and

if the first and the second user identities are able to form the group, then forming the group for sending the communications, receiving and presenting the communications that are not censored based on the individual user identity, the receiving being in real time and over the Internet network, and not allowing the data that is censored to be presented at the output device corresponding to the user identity that is censored from receiving the data.

885. (Previously presented) A method of communicating via an Internet network, the method including:

connecting a computer system to a plurality of computers;

sending a respective login name and password corresponding to a respective user identity from each of the plurality of computers;

determining whether a first of the user identities and a second of the user identities are able to form a group for sending and receiving communications in real time;

determining whether at least one of the first user identity and the second user identity, individually, is censored from sending a pointer in the communications including at

Petitioner Microsoft Corporation, Ex. 1002, p. 3051

least one of text or ascii, the pointer being a pointer that produces producing a pointer-triggered message on demand; and

if the first and the second user identities are able to form the group, then forming the group and sending and receiving the communications that are not censored based on the individual user identity, the receiving being in real time over the Internet network.

886. (Previously presented) The system of claim 909, wherein the type further includes multimedia.

887. (Previously presented) The system of claim 909, wherein the type further includes graphical multimedia.

888. (Previously presented) The system of claim 909, wherein the type further includes a member-associated image.

889. (Previously presented) The system of claim 909, wherein the type further includes a member-associated image and at least one of text or ascii.

890. (Previously presented) The system of claim 909, wherein the type further includes audio and at least one of text or ascii.

891. (Previously presented) A system to communicate via an Internet network, the system including:

a plurality of participator computers, each of the plurality of computers being connected to a respective input device and to a respective output device, the plurality of

Petitioner Microsoft Corporation, Ex. 1002, p. 3052

computers being connected, responsive to each of the plurality of computers sending a respective login name and password corresponding to a respective user identity, to a computer system programmed to:

form a group corresponding to a first of the user identities and a second of the user identities, each member of the group being capable of sending and receiving communications in real time,

determine whether at least one of the first user identity and the second user identity, individually, is censored from receiving, in the communications, data comprising a pointer, the pointer producing a pointer-triggered message on demand, and

thereafter cause the computers to receive, in real time via the Internet network, and present the communications that are not censored based on the individual user identity, and to not present the data that is censored at the output device corresponding to the user identity that is censored from receiving the data, wherein at least some of the communications include data representing at least text or ascii.

892. (Previously presented) A system to communicate via an Internet network, the system including:

a plurality of computers, each of the plurality of computers being connected to a respective input device and to a respective output device, the plurality of computers being connected, responsive to each of the plurality of computers sending a respective login name and password corresponding to a respective user identity, to a computer system programmed to:

form a group corresponding to a first of the user identities and a second of the user identities, each member of the group being capable of sending and receiving communications in real time,

Petitioner Microsoft Corporation, Ex. 1002, p. 3053

determine whether at least one of the first user identity and the second user identity, individually, is censored from sending, in the communications, a pointer that produces a pointer-triggered message on demand, and

thereafter cause the computers to receive, in real time via the Internet network, and present the communications that are not censored based on the individual user identity, and to not present the communications that are censored at the output device corresponding to the user identity that is censored from receiving the data, at least some of the communications including data representing at least text or ascii.

893. (Withdrawn) A method of communicating via an Internet network, the method including:

connecting a plurality of computers to a system;

sending, from each of the plurality of computers, a respective login name and password corresponding to a respective user identity;

providing a first of the user identities access to a member-associated image and to member identity information respectively corresponding to a second of the user identities;

determining whether the first of the user identities and the second of the user identities are able to form a group for sending and for receiving communications in real time; and

if the first and the second user identities are able to form the group, forming the group, sending the communications, and receiving the communications in real time and via the Internet network, wherein at least some of the communications include data representing multimedia messages, and at least some of the multimedia messages include a pointer that produces a pointer-triggered message on demand.

Petitioner Microsoft Corporation, Ex. 1002, p. 3054

894. (Withdrawn) A method of communicating via an Internet network, the method including:

connecting a plurality of computers to a computer system;

sending a respective login name and password corresponding to a respective user identity from each of the plurality of computers;

determining whether a first of the user identities and a second of the user identities are able to form a group for sending and for receiving communications in real time;

determining whether the first user identity is censored from access to a member-associated image and member identity information respectively corresponding to the second user identity;

if the first user identity is censored, not allowing access to the member-associated image;

if the first user identity is not censored, allowing access to the member-associated image; and

if the first and the second user identities are able to form the group, forming the group for sending the communications, and receiving the communications in real time and via the Internet network, wherein at least some of the communications include data representing at least one of a pointer, video, audio, graphic, or multimedia.

895. (Withdrawn) A system to communicate via an Internet network, the system including:

a plurality of computers communicatively connected, responsive to each of the computers sending a respective login name and password corresponding to a respective user identity, to a computer system programmed to:

determine whether a first of the user identities and a second of the user identities

Petitioner Microsoft Corporation, Ex. 1002, p. 3055

are able to form a group for sending and for receiving communications in real time,

determine whether the first user identity is censored from access to a member-associated image and member identity information respectively corresponding to the second user identity,

if the first user identity is censored, not allow access to the member-associated image,

if the first user identity is not censored, allow access to the member-associated image, and

if the first and the second user identities are able to form the group, then form the group for sending the communications,

wherein the computers corresponding to the user identities of the formed group are programmed to receive the communications in real time and via the Internet network wherein at least some of the communications include data representing multimedia and at least some of the communications include a pointer that produces a pointer-triggered message on demand.

896. (Withdrawn) An Internet network communication system, the system including:

a plurality of computers connected, responsive to each of the plurality of computers sending a respective login name and password corresponding to a respective user identity, to a computer system programmed to:

provide a first of the user identities access to a member-associated image corresponding to a second of the user identities,

determine whether the first user identity is censored from access to a member-associated image corresponding to the second user identity,

Petitioner Microsoft Corporation, Ex. 1002, p. 3056

if the first user identity is censored, not allow access to the member-associated image,

if the first user identity is not censored, allow access to the member-associated image,

determine whether the first of the user identities and the second of the user identities are able to form a group for sending and for receiving communications in real time, and

if the first and the second user identities are able to form the group, form the group, wherein those of the plurality of computers corresponding to the first and the second user identities are programmed to send the communications and to receive the communications in real time and via the Internet network.

897. (Previously presented) The system of claim 909, wherein the at least one type includes video and at least one of text or ascii.

898. (Previously presented) The system of claim 909, wherein the at least one type includes graphic and at least one of text or ascii.

899. (Previously presented) The system of claim 909, wherein the at least one type includes audio and video and at least one of text or ascii.

900. (Previously presented) The system of claim 909, wherein the at least one type includes audio and a member-associated image.

901. (Withdrawn) A method of communicating via an Internet network, the

Petitioner Microsoft Corporation, Ex. 1002, p. 3057

method including:

connecting a computer system with a plurality of computers;

sending, from each of the plurality of computers, a respective user identity associated with a login name and a password;

permitting at least a first of the user identities and a second of the user identities to form a group; and

communicating the communications in real time, via the Internet network, between the computers in the group, wherein at least some of the communications include data representing multimedia messages comprised of more than one data type, and at least some other of the communications include a pointer that produces a pointer-triggered message on demand.

902. (Withdrawn) A system to communicate via an Internet network, the system including:

a plurality of computers, responsive to each of the computers sending information indicative of a respective login name and password corresponding to a respective user identity, to a computer system programmed to:

permit at least a first of the plurality of computers and a second of the plurality of computers to form a group for communicating communications in real time via the Internet network, wherein those of the plurality of computers in the group are programmed to receive the communications, at least some of the communications including data representing multimedia messages comprised of more than one data type, and at least some other of the communications including a pointer that produces a pointer-triggered message on demand.

903. (Withdrawn) A human communication system for controlling

Petitioner Microsoft Corporation, Ex. 1002, p. 3058

communication via an Internet network, the system including:

a plurality of computers connected, responsive to each of the plurality of computers sending a user identity associated with a login name and a password, to a computer system programmed to allow a first of the user identities and a second of the user identities to form a group to send and receive communications in real time and via the Internet network, wherein those of the plurality of computers in the group are programmed to receive communications, wherein at least some of the communications include a pointer that produces a pointer-triggered message on demand, at least some of the communications include data representing human communication of sound, and at least some of the communications include data representing at least one of text or ascii.

904. (Previously presented) The system of claim 909, wherein the at least one type includes video and a member-associated image.

905. (Previously presented) The system of claim 909, wherein the at least one type includes audio and a member-associated image and at least one of text or ascii.

906. (Previously presented) The system of claim 909, wherein the at least one type includes multimedia and at least one of text or ascii.

907. (Previously presented) The system of claim 909, wherein the at least one type includes the type including a pointer, a the pointer is a pointer that produces a pointer-triggered message on demand.

908. (Previously presented) The system of claim 880, wherein the at least one

Petitioner Microsoft Corporation, Ex. 1002, p. 3059

type includes the type including a pointer, a the pointer is a pointer that produces a pointer-triggered message on demand.

909. (Previously presented) A system of controlling communications via an Internet network, the system including:

a computer system programmed to:

connect a plurality of computers including a first computer in response to each of the plurality of computers sending information indicative of a respective login name and a respective password, which together correspond to a user identity,

store a set of privileges corresponding to each user identity,

determine whether the set of privileges corresponding to each user identity includes a privilege to communicate at least one type of message in real time via the Internet network, the type including a pointer, and if the set of privileges includes the privilege, communicate the at least one type of message,

the computer system being further programmed to allow the first computer to communicate data representing the at least one type of message to another of the plurality of computers, and

if the set of privileges does not include the privilege to communicate the at least one type of message, disallow the first computer from communicating the at least one type of message to another of the plurality of computers.

910. (Withdrawn) A method of controlling communications via an Internet network, the method including:

connecting a computer system with a plurality of computers;

sending information indicative of a respective login name and password

Petitioner Microsoft Corporation, Ex. 1002, p. 3060

corresponding to a first user identity from a first of the plurality of computers;

receiving information indicative of a login name and a password corresponding to a second user identity from a second of the plurality of computers;

allowing the first user identity and the second user identity to form a group; and

sending and receiving communications in real time and via the Internet network between those of the plurality of computers in the group, wherein at least some of the communications include a pointer that produces a pointer-triggered message on demand, at least some of the communications include data representing sound indicative of a human communication of sound, and at least some of the communications include data representing at least one of text or ascii.

911. (Previously presented) The system of claim 881, wherein the at least one type includes the type including a pointer, a the pointer is a pointer that produces a pointer-triggered message on demand.

912. (Previously presented) The system of claim 882, wherein the at least one type includes the type including a pointer, a the pointer is a pointer that produces a pointer-triggered message on demand.

913. (Previously presented) The system of claim 883, wherein the at least one type includes the type including a pointer, a the pointer is a pointer that produces a pointer-triggered message on demand.

914. (Previously presented) The system of claim 886, wherein the at least one type includes the type including a pointer, a the pointer is a pointer that produces a pointer-

Petitioner Microsoft Corporation, Ex. 1002, p. 3061

triggered message on demand.

915. (Previously presented) The system of claim 887, wherein the at least one type includes the type including a pointer, a the pointer is a pointer that produces a pointer-triggered message on demand.

916. (Previously presented) A method of controlling communications via an Internet network, the method including:

storing a set of privileges corresponding to a user identity;

connecting a plurality of computers via the Internet network;

receiving information indicative of a login name and a password corresponding respectively to the user identity from a first computer of the plurality of computers;

determining whether the set of privileges includes a privilege to communicate at least one type of message, the type of message including at least one of a pointer, audio, video, a graphic, or multimedia, the privilege to communicate corresponding to at least one parameter changeable by a user corresponding to another user identity;

if the set of privileges includes the privilege to communicate the at least one type of message, allowing the first of the plurality of computer to communicate, in real time via the internet network, the type of message to an other of the plurality of computers; and

if the set of privileges does not include the privilege to communicate the at least one type of message, disallowing the first computer from communicating the at least one type of message to the other of the plurality of computers.

917. (Withdrawn) A method of receiving a communication via an Internet network, the method including:

Petitioner Microsoft Corporation, Ex. 1002, p. 3062

sending, from a first computer, information indicative of a login name and a password corresponding to a user identity;

responsive to the sending, connecting the first computer to a computer system;

forming a communication link between the first computer and a second computer for communicating a communication, the communication including data representing at least one of a member-associated image, video, a graphic, sound, or multimedia;

communicating a pointer, from the first computer to the computer system to obtain the communication at the first computer, the communication being sent in real time and via the Internet network; and

receiving the communication from the first computer at the second computer over the communication link.

918. (Withdrawn) A system to distribute a communication via an Internet network, the system including:

a first computer connected to a computer system, the first computer being connected responsive to its sending information indicative of a login name and a password corresponding to a user identity;

a communication link between the first computer and a second computer; and

respective software stored in the first and second computers, the software stored in the first computer being programmed to communicate a pointer, from the first computer to the computer system, for receiving the communication at the first computer, the communication being sent in real time and via the Internet network, and the software stored in the second computer being programmed to receive the communication for the first computer at the second computer via the communication link, wherein the communication includes data representing at least one of video, a graphic, sound, or multimedia.

Petitioner Microsoft Corporation, Ex. 1002, p. 3063

919. (Previously presented) The system of claim 888, wherein the at least one type includes the type including a pointer, a the pointer is a pointer that produces a pointer-triggered message on demand.

920. (Previously presented) The system of claim 889, wherein the at least one type includes the type including a pointer, a the pointer is a pointer that produces a pointer-triggered message on demand.

921. (Previously presented) The system of claim 890, wherein the at least one type includes the type including a pointer, a the pointer is a pointer that produces a pointer-triggered message on demand.

922. (Previously presented) The system of claim 897, wherein the at least one type includes the type including a pointer, a the pointer is a pointer that produces a pointer-triggered message on demand.

923. (Previously presented) The system of claim 898, wherein the at least one type includes the type including a pointer, a the pointer is a pointer that produces a pointer-triggered message on demand.

924. (Previously presented) The system of claim 899, wherein the at least one type includes the type including a pointer, a the pointer is a pointer that produces a pointer-triggered message on demand.

Petitioner Microsoft Corporation, Ex. 1002, p. 3064

925. (Previously presented) The system of claim 900, wherein the at least one type includes the type including a pointer, a the pointer is a pointer that produces a pointer-triggered message on demand.

926. (Previously presented) The system of claim 904, wherein the at least one type includes the type including a pointer, a the pointer is a pointer that produces a pointer-triggered message on demand.

927. (Previously presented) The system of claim 905, wherein the at least one type includes the type including a pointer, a the pointer is a pointer that produces a pointer-triggered message on demand.

928. (Previously presented) The system of claim 906, wherein the at least one type includes the type including a pointer, a the pointer is a pointer that produces a pointer-triggered message on demand.

929. (Previously presented) The method of claim 916, wherein the at least one type includes a pointer.

930. (Previously presented) The method of claim 916, wherein the at least one type includes audio.

931. (Previously presented) The method of claim 916, wherein the at least one type includes video.

Petitioner Microsoft Corporation, Ex. 1002, p. 3065

932. (Previously presented) The method of claim 916, wherein the at least one type includes a graphic.

933. (Previously presented) The method of claim 916, wherein the at least one type includes multimedia.

934. (Previously presented) The method of claim 916, wherein the at least one type includes a pointer and audio.

935. (Previously presented) The method of claim 916, wherein the at least one type includes a pointer and video.

936. (Previously presented) The method of claim 916, wherein the at least one type includes a pointer and a graphic.

937. (Previously presented) The method of claim 916, wherein the at least one type includes audio and a graphic.

938. (Previously presented) The method of claim 916, wherein the at least one type includes audio and video.

939. (Previously presented) The method of claim 916, wherein the at least one type includes video and a graphic.

940. (Previously presented) The method of claim 916, wherein the at least one

Petitioner Microsoft Corporation, Ex. 1002, p. 3066

type includes a pointer and audio and video.

941. (Previously presented) The method of claim 916, wherein the at least one type includes a pointer and audio and a graphic.

942. (Previously presented) The method of claim 916, wherein the at least one type includes a pointer and video and a graphic.

943. (Previously presented) The method of claim 916, wherein the at least one type includes audio and video and a graphic.

944. (Previously presented) The method of claim 916, wherein the at least one type includes a pointer and audio and video and a graphic.

945. (Previously presented) The method of claim 916, wherein the at least one type includes a pointer that produces a pointer-triggered message on demand.

946. (Previously presented) The method of claim 930, wherein the at least one type includes a pointer that produces a pointer-triggered message on demand.

947. (Previously presented) The method of claim 931, wherein the at least one type includes a pointer that produces a pointer-triggered message on demand.

948. (Previously presented) The method of claim 933, wherein the at least one type includes a pointer that produces a pointer-triggered message on demand.

Petitioner Microsoft Corporation, Ex. 1002, p. 3067

949. (Withdrawn) An Internet communication system, the system including:

a computer system including a server computer;

a plurality of computers, each of the plurality of computers connected to an input device and an output device, and

a communication link between the computer system including a server computer and each of the plurality of computers, each of the plurality of computers being connected responsive to its sending information indicative of a login name and password, each respective login name and password corresponding to a respective user identity,

wherein the server computer is programmed to:

allow one of the plurality of computers to be a member in one of a plurality of communication channels, each said communication channel allowing communication between at least some of the plurality of computers by way of the communication link,

cause graphical multimedia associated with a first of the login names to be presented at one of the output devices corresponding to a second of the user identities,

the server computer being further programmed to cause the user messages to be delivered over or by way of the Internet network, in at least one of the communication channels, and in real time between receipt and delivery of the user messages so as to allow access to the user messages,

wherein at least some of the user messages individually include at least two of text, a sound, a graphic, an image, and a video.

950. (Withdrawn) The system of claim 949, wherein at least one of said user messages includes a uniform resource locater, whereby the uniform resource locater produces a message upon demand.

Petitioner Microsoft Corporation, Ex. 1002, p. 3068

951. (Withdrawn) The system of claim 949, wherein at least one of said user messages includes the uniform resource locator, whereby the uniform resource locator commands at least one of the plurality of computers corresponding to the receipt to locate an additional message and present the additional message at the respective output device.

952. (Withdrawn) The system of claim 949, wherein the computer system is further programmed to determine whether the receipt is censored, and to cause the receipt if the receipt is not censored.

953. (Previously presented) A method of communicating via an Internet network, the method including:

establishing a communication path between a computer system and each of a plurality of computers, each of the plurality of computers respectively connected to an input device and to an output device, each of the plurality of computers being connected responsive to its sending information indicative of a login name and password, each respective login name and password corresponding to a respective user identity,

allowing a first one of the plurality of computers to be a member of one of a plurality of communication channels, and

storing, for a first of the user identities, an authorization for allowing or disallowing presentment of graphical multimedia,

based on the authorization, presenting the graphical multimedia at the output device corresponding to a second of the user identities,

sending and receiving, in real time, user messages between two or more of the plurality of computers, over or by way of the Internet network, in at least one of the

Petitioner Microsoft Corporation, Ex. 1002, p. 3069

communication channels, thereby allowing access to the user messages,

wherein at least some of the user messages individually include a uniform resource locator that points to data other than text or ascii.

954. (Previously presented) The method of claim 953, further including instructing at least one of the plurality of computers to locate an additional user message on demand via the uniform resource locator.

955. (Previously presented) A method communicating via an Internet network, the method including:

connecting a plurality of computers to a computer system, each of the plurality of computers connected responsive to receiving at the computer system information indicative of a respective login name and password corresponding to a respective user identity;

determining whether a first of the user identities and a second of the user identities are able to form a group for sending and for receiving communications in real time;

determining whether at least one of the first user identity and the second user identity, individually, is censored from receiving in the communications at least one of a pointer, video, audio, graphic, or multimedia; and

if the first and the second user identities are able to form the group, forming the group for sending the communications, and receiving the communications that are not censored based on the individual user identity, wherein the receiving is in real time via the Internet network, and not receiving the communications that are censored.

956. (Previously presented) A method communicating via an Internet network, the method including:

Petitioner Microsoft Corporation, Ex. 1002, p. 3070

connecting a plurality of computers to a computer system, each of the plurality of computers connected responsive to receiving at the computer system information indicative of a respective login name and password corresponding to a respective user identity;

determining whether a first of the user identities and a second of the user identities are able to form a group for sending and for receiving communications in real time by determining whether at least one of the first user identity and the second user identity, individually, is censored from receiving in the communications at least one of a pointer, video, audio, graphic, or multimedia; and

if the first and the second user identities are able to form the group, forming the group for sending the communications, and receiving the communications in real time via the Internet network.

957. (Previously presented) A method communicating via an Internet network, the method including:

connecting a plurality of computers to a computer system, each of the plurality of computers connected responsive to receiving at the computer system information indicative of a respective login name and password corresponding to a respective user identity;

determining whether a first of the user identities and a second of the user identities are able to form a group for sending and for receiving communications in real time;

determining whether at least one of the first user identity and the second user identity, individually, is censored from sending in the communications at least one of a pointer, video, audio, graphic, or multimedia; and

if the first and the second user identities are able to form the group, forming the group, sending the communications that are not censored based on the individual user identity, and receiving the communications in real time via the Internet network.

Petitioner Microsoft Corporation, Ex. 1002, p. 3071

958. (Previously presented) A method communicating via an Internet network, the method including:

connecting a plurality of computers to a computer system, each of the plurality of computers connected responsive to receiving at the computer system information indicative of a respective login name and password corresponding to a respective user identity;

determining whether a first of the user identities and a second of the user identities are able to form a group for sending and for receiving communications in real time by determining whether at least one of the first user identity and the second user identity, individually, is censored from sending in the communications at least one of a pointer, video, audio, graphic, or multimedia; and

if the first and the second user identities are able to form the group, forming the group for sending the communications, and receiving the communications in real time via the Internet network.

959. (Previously presented) A system to communicate via an Internet network, the system including:

a plurality of computers connected to a computer system, each of the plurality of computers being connected responsive to receipt at the computer system of information indicative of a respective login name and password corresponding to a respective user identity, the computer system being programmed to:

determine whether a first of the user identities and a second of the user identities are able to form a group capable of sending and receiving communications in real time;

determine whether at least one of the first user identity and the second user identity, individually, is censored from receiving in the communications at least one of a pointer,

Petitioner Microsoft Corporation, Ex. 1002, p. 3072

video, audio, graphic, or multimedia, and

if the first and the second user identities are able to form the group, form the group for sending the communications, and

cause the plurality of computers in the group to receive, in real time via the Internet network, the communications that are not censored based on the individual user identity, and

cause the plurality of computers in the group to not receive the communications that are censored based on the individual user identity.

960. (Previously presented) A system to communicate via an Internet network, the system including:

a plurality of computers connected to a computer system, each of the plurality of computers being connected responsive to receipt at the computer system of information indicative of a respective login name and password corresponding to a respective user identity, the computer system being programmed to:

determine whether a first of the user identities and a second of the user identities are able to form a group capable of sending and receiving communications in real time by determining whether at least one of the first user identity and the second user identity, individually, is censored from receiving in the communications at least one of a pointer, video, audio, graphic, or multimedia; and

if the first and the second user identities are able to form the group, cause the group to be formed to send the communications, and cause the plurality of computers in the group receive, in real time via the Internet network, the communications that are not censored based on the individual user identity.

Petitioner Microsoft Corporation, Ex. 1002, p. 3073

961. (Previously presented) A system to communicate via an Internet network, the system including:

a plurality of computers connected to a computer system, each of the plurality of computers being connected responsive to receipt at the computer system of information indicative of a respective login name and password corresponding to a respective user identity, the computer system being programmed to:

determine whether a first of the user identities and a second of the user identities are able to form a group for sending and for receiving communications in real time;

determine whether at least one of the first user identity and the second user identity, individually, is censored from sending in the communications at least one of a pointer, video, audio, graphic, or multimedia; and

if the first and the second user identities are able to form the group, cause the group to be formed and the communications that are not censored based on the individual user identity to be sent, and cause the communications to be received in real time via the Internet network.

962. (Previously presented) A system to communicate via an Internet network, the system including:

a plurality of computers connected to a computer system, each of the plurality of computers being connected responsive to receipt at the computer system of information indicative of a respective login name and password corresponding to a respective user identity, the computer system being programmed to:

determine whether a first of the user identities and a second of the user identities are able to form a group capable of sending and receiving communications in real time by determining whether at least one of the first user identity and the second user identity,

Petitioner Microsoft Corporation, Ex. 1002, p. 3074

individually, is censored from sending in the communications at least one of a pointer, video, audio, graphic, or multimedia; and

if the first and the second user identities are able to form the group, cause the group to be formed to send and receive the communications between members of the group, wherein the communications are received in real time via the Internet network.

963. (Previously presented) The method of claim 939, further including allowing the first computer to communicate a pointer that produces a pointer-triggered message on demand.

964. (Previously presented) The method of claim 940, further including allowing the first computer to communicate a pointer that produces a pointer-triggered message on demand.

965. (Previously presented) The method of claim 941, further including allowing the first computer to communicate a pointer that produces a pointer-triggered message on demand.

966. (Previously presented) The method of claim 942, further including allowing the first computer to communicate a pointer that produces a pointer-triggered message on demand.

967. (Previously presented) The method of claim 943, further including allowing the first computer to communicate a pointer that produces a pointer-triggered message on demand.

Petitioner Microsoft Corporation, Ex. 1002, p. 3075

968. (Previously presented) The method of claim 944, further including allowing the first computer to communicate a pointer that produces a pointer-triggered message on demand.

969. (Previously presented) The method of claim 945, further including allowing the first computer to communicate a pointer that produces a pointer-triggered message on demand.

970. (Previously presented) The method of claim 916, further including presenting an option to the plurality of computers to access the computer system with at least two client software alternatives.

971. (Previously presented) The method of claim 916, further including determining whether receipt of a communication is censored based on content.

972. (Previously presented) The method of claim 916, further including determining whether receipt of a communication is censored based on age.

973. (Previously presented) A method communicating via an Internet network, the method including:

connecting a plurality of computers to a computer system, each of the plurality of computers connected responsive to receiving at the computer system information indicative of a respective login name and password corresponding to a respective user identity;

determining whether a first of the user identities and a second of the user

Petitioner Microsoft Corporation, Ex. 1002, p. 3076

identities are able to form a group for sending and for receiving communications in real time;

determining whether at least one of the first user identity and the second user identity, individually, is censored from receiving in the communications at least one of a pointer, video, audio, graphic, or multimedia; and

if the first and the second user identities are able to form the group, forming the group for sending the communications, and receiving the communications that are not censored based on the individual user identity, wherein the receiving is in real time via the Internet network, and not receiving the communications that are censored

974. (Previously presented) A method communicating via an Internet network, the method including:

connecting a plurality of computers to a computer system, each of the plurality of computers connected responsive to receiving at the computer system information indicative of a respective login name and password corresponding to a respective user identity;

determining whether a first of the user identities and a second of the user identities are able to form a group for sending and for receiving communications in real time by determining whether at least one of the first user identity and the second user identity, individually, is censored from receiving in the communications at least one of a pointer, video, audio, graphic, or multimedia; and

if the first and the second user identities are able to form the group, forming the group for sending the communications, and receiving the communications in real time via the Internet network.

975. (Previously presented) A method communicating via an Internet network, the method including:

Petitioner Microsoft Corporation, Ex. 1002, p. 3077

connecting a plurality of computers to a computer system, each of the plurality of computers connected responsive to receiving at the computer system information indicative of a respective login name and password corresponding to a respective user identity;

determining whether a first of the user identities and a second of the user identities are able to form a group for sending and for receiving communications in real time;

determining whether at least one of the first user identity and the second user identity, individually, is censored from sending in the communications at least one of a pointer, video, audio, graphic, or multimedia; and

if the first and the second user identities are able to form the group, forming the group, sending the communications that are not censored based on the individual user identity, and receiving the communications in real time via the Internet network

976. (Previously presented) A method communicating via an Internet network, the method including:

connecting a plurality of computers to a computer system, each of the plurality of computers connected responsive to receiving at the computer system information indicative of a respective login name and password corresponding to a respective user identity;

determining whether a first of the user identities and a second of the user identities are able to form a group for sending and for receiving communications in real time by determining whether at least one of the first user identity and the second user identity, individually, is censored from sending in the communications at least one of a pointer, video, audio, graphic, or multimedia; and

if the first and the second user identities are able to form the group, forming the group for sending the communications, and receiving the communications in real time via the Internet network.

Petitioner Microsoft Corporation, Ex. 1002, p. 3078

977. (Withdrawn) A method of communicating via an Internet network, the method including:

presenting an option to a plurality of computers to access a computer system with at least one of two client software alternatives, wherein the option is exercised by providing a respective user name and password respectively corresponding to a user identity to at least one of the client software alternatives, wherein both of the two client software alternatives cause the respective user identities to be recognized by the computer system and allows at least some of the plurality of computers to form at least one group for sending communications, wherein at least some of the communications are received in real time via the Internet network, and wherein the at least one of client software alternatives allows the computer system to determine whether at least one of the user identities, individually, is censored from data representing at least one of a pointer, video, audio, graphic, or multimedia such that the data that is censored is not presented by the corresponding computer.

978. (Previously presented) A system to communicate via an Internet network, the system including:

a plurality of computers connected to a computer system, each of the plurality of computers being connected responsive to receipt at the computer system of information indicative of a respective login name and password corresponding to a respective user identity, the computer system being programmed to:

determine whether a first of the user identities and a second of the user identities are able to form a group capable of sending and receiving communications in real time;

determine whether at least one of the first user identity and the second user identity, individually, is censored from receiving in the communications at least one of a pointer,

Petitioner Microsoft Corporation, Ex. 1002, p. 3079

video, audio, graphic, or multimedia, and

if the first and the second user identities are able to form the group, form the group for sending the communications, and

cause the plurality of computers in the group to receive, in real time via the Internet network, the communications that are not censored based on the individual user identity, and

cause the plurality of computers in the group to not receive the communications that are censored based on the individual user identity.

979. (Previously presented) A system to communicate via an Internet network, the system including:

a plurality of computers connected to a computer system, each of the plurality of computers being connected responsive to receipt at the computer system of information indicative of a respective login name and password corresponding to a respective user identity, the computer system being programmed to:

determine whether a first of the user identities and a second of the user identities are able to form a group capable of sending and receiving communications in real time by determining whether at least one of the first user identity and the second user identity, individually, is censored from receiving in the communications at least one of a pointer, video, audio, graphic, or multimedia; and

if the first and the second user identities are able to form the group, cause the group to be formed to send the communications, and cause the plurality of computers in the group receive, in real time via the Internet network, the communications that are not censored based on the individual user identity.

Petitioner Microsoft Corporation, Ex. 1002, p. 3080

980. (Previously presented) A system to communicate via an Internet network, the system including:

a plurality of computers connected to a computer system, each of the plurality of computers being connected responsive to receipt at the computer system of information indicative of a respective login name and password corresponding to a respective user identity, the computer system being programmed to:

determine whether a first of the user identities and a second of the user identities are able to form a group for sending and for receiving communications in real time;

determine whether at least one of the first user identity and the second user identity, individually, is censored from sending in the communications at least one of a pointer, video, audio, graphic, or multimedia; and

if the first and the second user identities are able to form the group, cause the group to be formed and the communications that are not censored based on the individual user identity to be sent, and cause the communications to be received in real time via the Internet network.

981. (Previously presented) A system to communicate via an Internet network, the system including:

a plurality of computers connected to a computer system, each of the plurality of computers being connected responsive to receipt at the computer system of information indicative of a respective login name and password corresponding to a respective user identity, the computer system being programmed to:

determine whether a first of the user identities and a second of the user identities are able to form a group capable of sending and receiving communications in real time by determining whether at least one of the first user identity and the second user identity,

Petitioner Microsoft Corporation, Ex. 1002, p. 3081

individually, is censored from sending in the communications at least one of a pointer, video, audio, graphic, or multimedia; and

if the first and the second user identities are able to form the group, cause the group to be formed to send and receive the communications between members of the group, wherein the communications are received in real time via the Internet network.

982. (Previously presented) A method of communication over an Internet network, the method including:

connecting a computer system with a plurality of computers;

sending information indicative of a respective login name and password corresponding to a first user identity from a first of the plurality of computers;

receiving information indicative of a login name and a password corresponding to a second user identity from a second of the plurality of computers; and

allowing the first user identity and the second user identity to send and receive communications on at least one of a plurality of channels, wherein at least some of the communications are received in real time via the Internet network, the computer system being programmed to determine whether at least one of the user identities, individually, is censored from data in one of the channels, the data representing at least one of a pointer, video, audio, graphic, or multimedia, such that the data that is censored is not presented by the corresponding computer.

983. (Previously presented) The method of claim 980, wherein the data includes a pointer that produces a pointer-triggered message on demand.

984. (Previously presented) The method of claim 980, further including:

Petitioner Microsoft Corporation, Ex. 1002, p. 3082

determining whether the first user identity is censored from the data by determining whether a parameter corresponding to the first user identity has been determined by a user corresponding to an other of the user identities.

985. (Previously presented) A method of communicating via an Internet network, the method including:

connecting a computer system with a plurality of computers;

sending, from each of the plurality of computers, a respective user identity associated with a login name and a password;

determining whether at least one of a first of the user identities is censored from graphical multimedia; and

allowing at least a first of the user identities and a second of the user identities to form a group; and

sending and receiving the communications in real time, via the Internet network, between the computers in the group, wherein at least some of the communications include data representing at least one of a pointer, video, audio, a graphic, multimedia, or at least one of text or ascii, and not allowing the graphical multimedia that is censored to be presented at one of the computers corresponding to the one of the user identities.

986. (Previously presented) A method of communicating via an Internet network, the method including:

connecting a computer system with a plurality of computers;

sending, from each of the plurality of computers, a respective user identity associated with a login name and a password;

determining whether at least one of a first of the user identities is censored from

Petitioner Microsoft Corporation, Ex. 1002, p. 3083

graphical data; and

allowing at least a first of the user identities and a second of the user identities to form a group; and

sending and receiving the communications in real time, via the Internet network, between the computers in the group, wherein at least some of the communications include data representing at least one of a pointer, video, audio, a graphic, multimedia, or at least one of text or ascii, and not allowing the graphical data that is censored to be presented at one of the computers corresponding to the one of the user identities.

987. (Previously presented) A method of communicating via an Internet network, the method including:

connecting a computer system with a plurality of computers;

sending, from each of the plurality of computers, a respective user identity associated with a login name and a password;

determining whether at least one of a first of the user identities is censored from data representing graphical multimedia; and

allowing at least a first of the user identities and a second of the user identities to form a group; and

sending and receiving the communications in real time, via the Internet network, between the computers in the group, wherein at least some of the communications include data representing at least one of a pointer, video, audio, a graphic, multimedia, or at least one of text or ascii, and not allowing the data representing graphical multimedia that is censored to be presented at one of the computers corresponding to the one of the user identities.

988. (Previously presented) A method of communicating via an Internet network,

Petitioner Microsoft Corporation, Ex. 1002, p. 3084

the method including:

connecting a computer system with a plurality of computers;

sending, from each of the plurality of computers, a respective user identity associated with a login name and a password;

determining whether at least one of a first of the user identities is censored from graphical data; and

allowing at least a first of the user identities and a second of the user identities to form a group; and

sending and receiving the communications in real time, via the Internet network, between the computers in the group, wherein at least some of the communications include data representing at least one of a pointer, video, audio, a graphic, multimedia, or at least one of text or ascii, and not allowing the graphical data that is censored to be presented at one of the computers corresponding to the one of the user identities.

989. (Previously presented) A method of communicating via an Internet network, the method including:

connecting, responsive to sending information indicative of a respective login name and password corresponding to a respective user identity, a plurality of computers with computer system;

storing at least one permission corresponding to a first of the user identities, the permission allowing or disallowing communication of a type of media;

changing, responsive to a second of the users, the stored permission; and

if the first user identity has permission to allow the communication, the sending the communications and receiving and presenting the communications, wherein the receiving is in real time and via the Internet network, and not presenting the data that is censored to the

Petitioner Microsoft Corporation, Ex. 1002, p. 3085

corresponding output device.

990. (Previously presented) The method of claim 989, wherein the data represents a pointer.

991. (Previously presented) The method of claim 989, wherein the data represents a pointer that produces a pointer-triggered message on demand.

992. (Previously presented) The method of claim 989, wherein the data represents video.

993. (Previously presented) The method of claim 989, wherein the data represents audio.

994. (Previously presented) The method of claim 989, wherein the data represents a graphic.

995. (Previously presented) The method of claim 989, wherein the data represents multimedia.

Petitioner Microsoft Corporation, Ex. 1002, p. 3086

II. Remarks

The Examiner is requested to reconsider the application.

Applicant appreciates the Examiner's Interview on August 9, 2007.

Applicant requests that the Examiner consider the art listed on the enclosed 1449 forms of record. The art and corresponding IDS have previously been submitted. Applicant would particularly note those documents listed on the enclosed 1449 forms as pertaining to the *Windy City Innovations, LLC v. America Online, Inc.* litigation (which has been settled).

Claim charts, for the pending claims, are provided.

In response to the restriction requirement, Applicant elects Group 3 with traverse and maintains the traversal set forth in Applicant's filing dated February 27, 2007, and additionally notes that the Examiner has not shown, pursuant to MPEP Sec. 802, that claims are independent and distinct and have separate utility for each of the Groups. More so, even if they are separate and distinct, there is "a serious burden on the Examiner if restriction is required (see MPEP Section 803.02, Section 806.04(a) - Section 806.04(i), Section 808.01(a), and Section 808.02)." And pursuant to GUIDELINES found there, "examiners must provide reasons and/or examples to support conclusions." The Examiner has not provided sufficient "reasons and/or examples to support conclusions" as required by the MPEP. In sum, the Examiner has not established that these Groups are separate and distinct and has not made out a prima facie showing as to why a search and consideration of the prior art for the elected Group would not inherently include a search and consideration of the prior art of the other Groups.

The application is believed to be in condition for allowance, and favorable action is requested. If the prosecution of this case can be in any way advanced by a telephone discussion, the Examiner is requested to call the undersigned at (312) 240-0824.

The Commissioner is hereby authorized to charge any fees associated with the above-

Petitioner Microsoft Corporation, Ex. 1002, p. 3087

identified patent application or credit any overcharges to Deposit Account No. 50-0235, and if any extension of time is needed, this shall be deemed a petition therefor. Please direct all communication to the undersigned at the address given below.

Respectfully submitted,

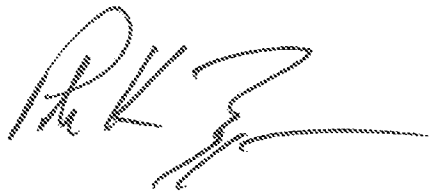

Date: August 15, 2007

Peter K. Trzyna
(Reg. No. 32,601)

P. O. Box 7131
Chicago, Illinois 60680-7131

(312) 240-0824

Petitioner Microsoft Corporation, Ex. 1002, p. 3088

PATENT

Paper No.

File: AIS-P1-99

IN THE UNITED STATES PATENT AND TRADEMARK OFFICE

Inventor	:	MARKS, Daniel L.
Serial No.	:	09/399,578
Filed	:	20 September 1999
For	:	GROUP COMMUNICATIONS MULTIPLEXING SYSTEM
Group Art Unit	:	2145
Examiner	:	WINDER, Patrice L.

MS: RCE
Commissioner of Patents
P.O. Box 1450
Alexandria, VA 22313-1450

PETITION FOR EXTENSION OF TIME

S I R :

This is a Petition for Extension of Time for one month to respond to the Office Action Mailed on June 15, 2007, in the above-referenced patent application. If additional time is necessary, this Petition is to be deemed a Petition for such time as necessary to accept the Request for Continued Examination (RCE) Transmittal Letter and Amendment and Response filed herewith.

The Commissioner is hereby authorized to charge any fees associated with the above-identified patent application or credit any overcharges to Deposit Account No. 50-0235.

Please direct all correspondence to the undersigned at the address given below.

Respectfully submitted,

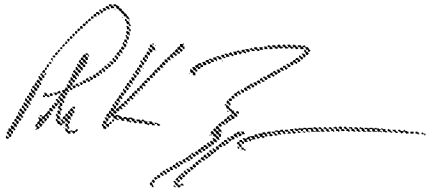

Date: August 15, 2007

Peter K. Trzyna
(Reg. No. 32,601)

P. O. Box 7131
Chicago, Illinois 60680-7131

(312) 240-0824

Petitioner Microsoft Corporation, Ex. 1002, p. 3090

Form PTO-1449 (modified)	Atty. Docket No. AIS-P1-99	Serial No. 09/339,578
List of Patents and Publications for Applicant's INFORMATION DISCLOSURE STATEMENT	Applicant: Daniel L. Marks	
(Use several sheets if necessary)	Filing Date: September 20, 1999	Group: 2765

U.S. Patent Documents	Foreign Patent Documents	Other Art
See Page 1	*See Page 1*	*See Page 1*

U.S. Patent Documents

Exam. Init.	Ref. Des.	Document Number	Date	Name	Class	Sub Class	Filing Date If App.
	A1	5,616,876	Apr. 1, 1997	Cluts	84	609	April 19, 1995
	A2	5,793,365	Aug. 11, 1998	Tang et al.	345	329	Jan. 2, 1996
	A3	5,832,212	Nov. 3, 1998	Cragun et al.	395	188.01	April 19, 1996
	A4	5,941,947	Aug. 24, 1999	Brown et al.	709	225	Aug. 18, 1995

Foreign Patent Documents

Exam. Init.	Ref. Des.	Document Number	Date	Country	Class	Sub Class	Translation Yes/No
	B1						
	B2						

Other Art (Including Author, Title, Date Pertinent Pages, Etc.)

Exam. Init.	Ref. Des.	Citation
	C1	

EXAMINER:	DATE CONSIDERED:

EXAMINER: INITIAL IF REFERENCE CONSIDERED, WHETHER OR NOT CITATION IS IN CONFORMANCE WITH MPEP609; DRAW LINE THROUGH CITATION IF NOT IN CONFORMANCE AND NOT CONSIDERED. INCLUDE COPY OF THIS FORM WITH NEXT COMMUNICATION TO APPLICANT.

INFORMATION DISCLOSURE STATEMENT — PTO-1449 (MODIFIED)

C: 56168(AIS-P1-99.1149.13.001)

Atty. Ref. AIS-P1-99
Art Unit 2145

Ser. No. 09/399,578

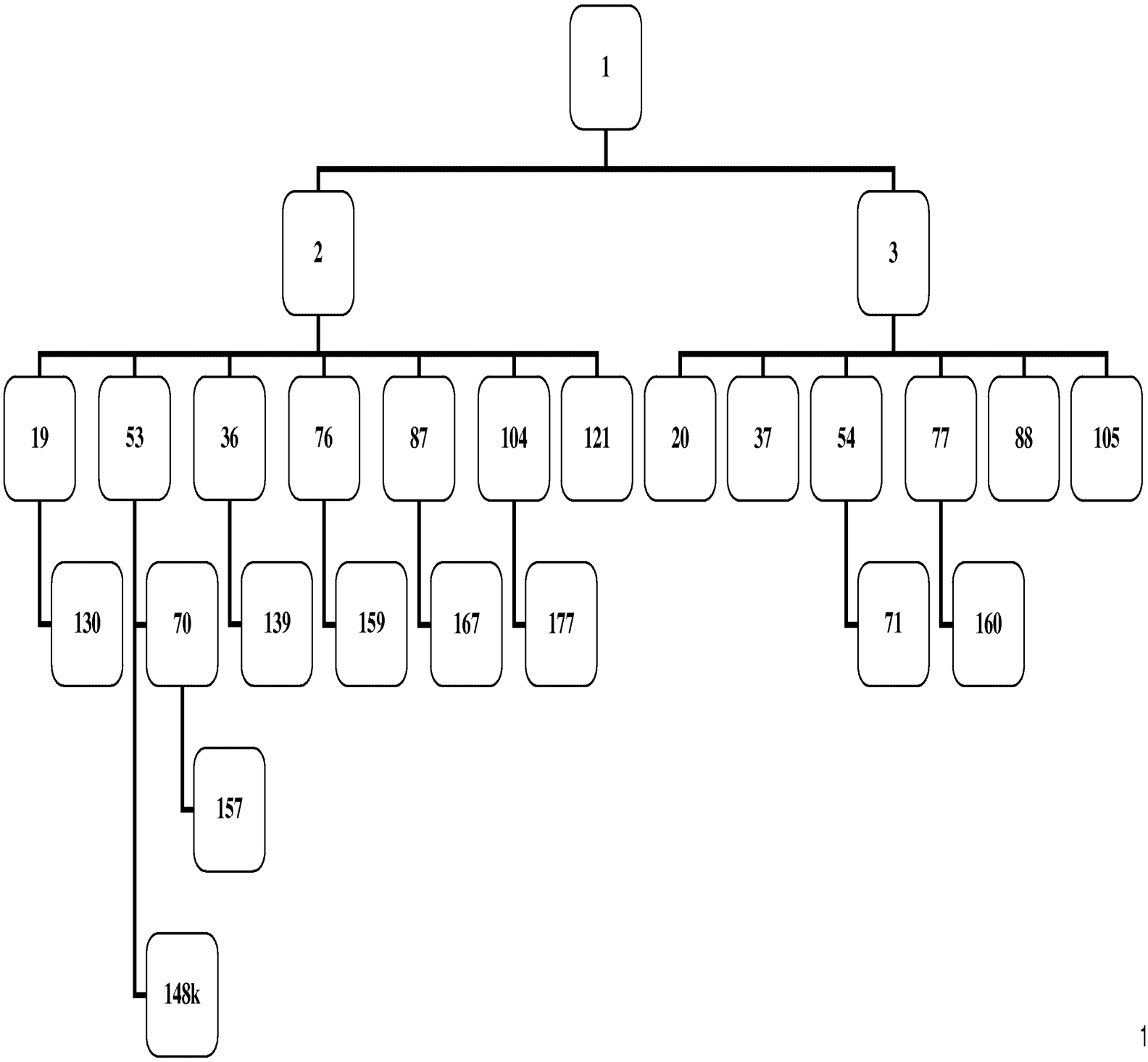

Ser. No. 09/399,578

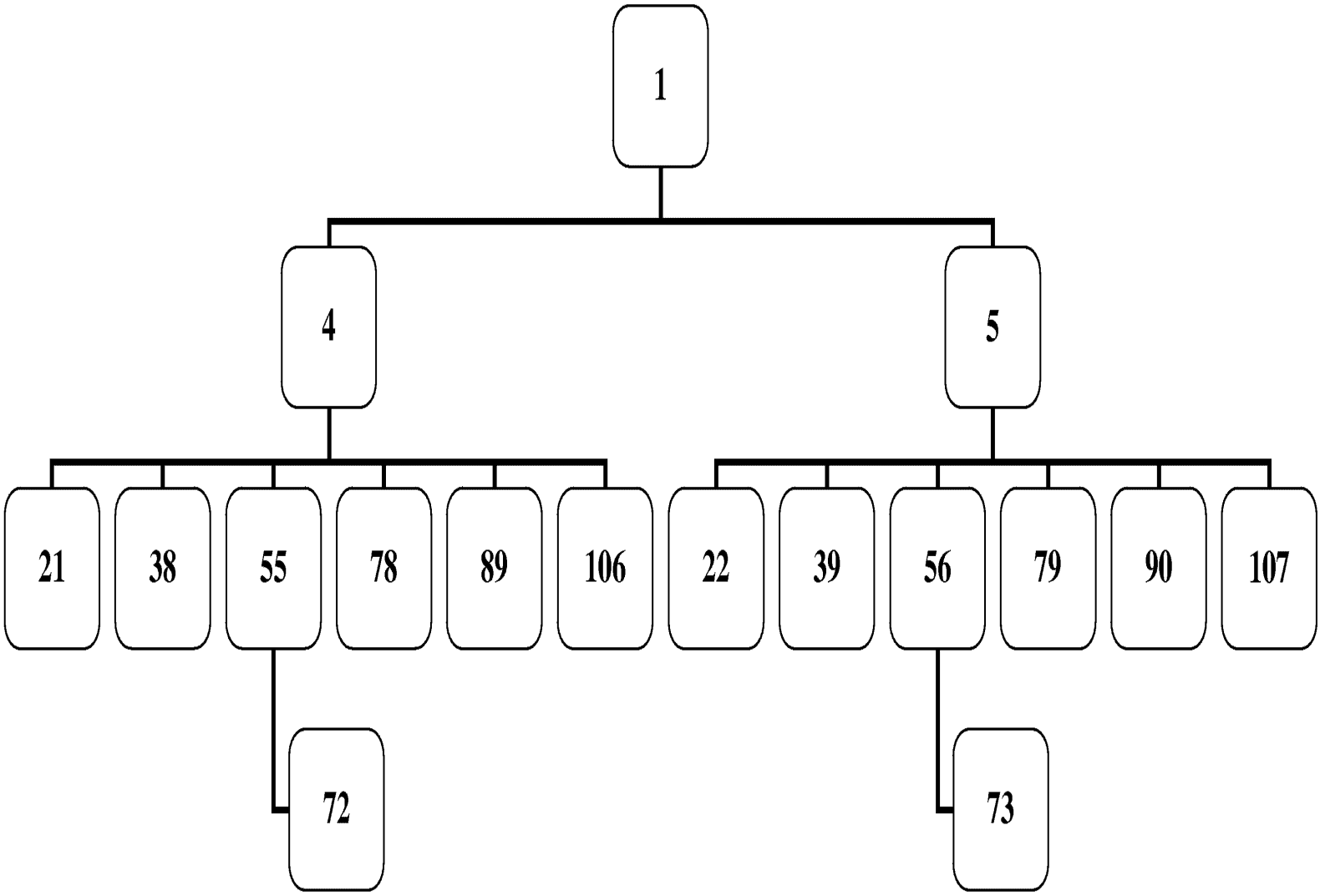

Ser. No. 09/399,578

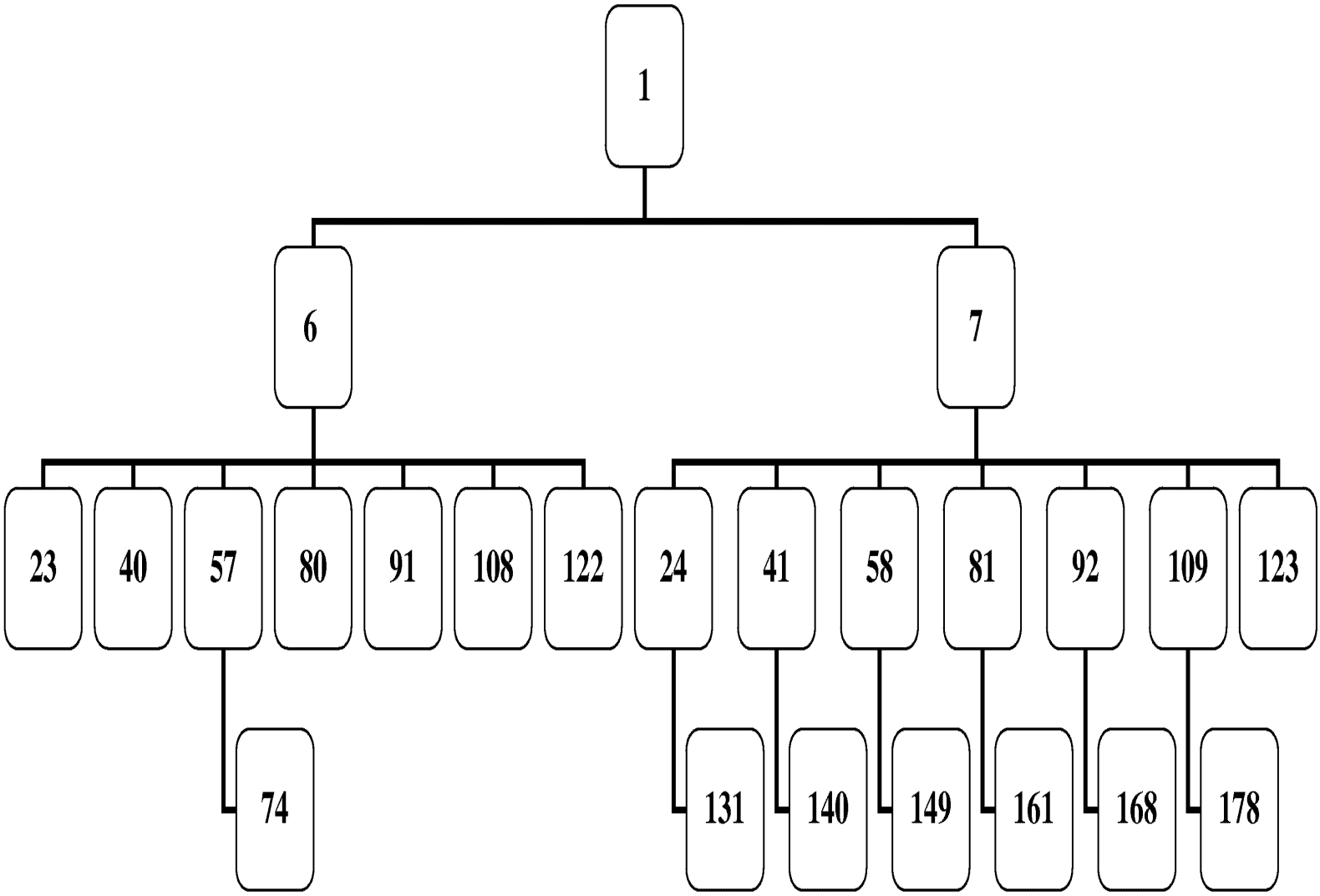

Petitioner Microsoft Corporation, Ex. 1002, p. 3094

Ser. No. 09/399,578

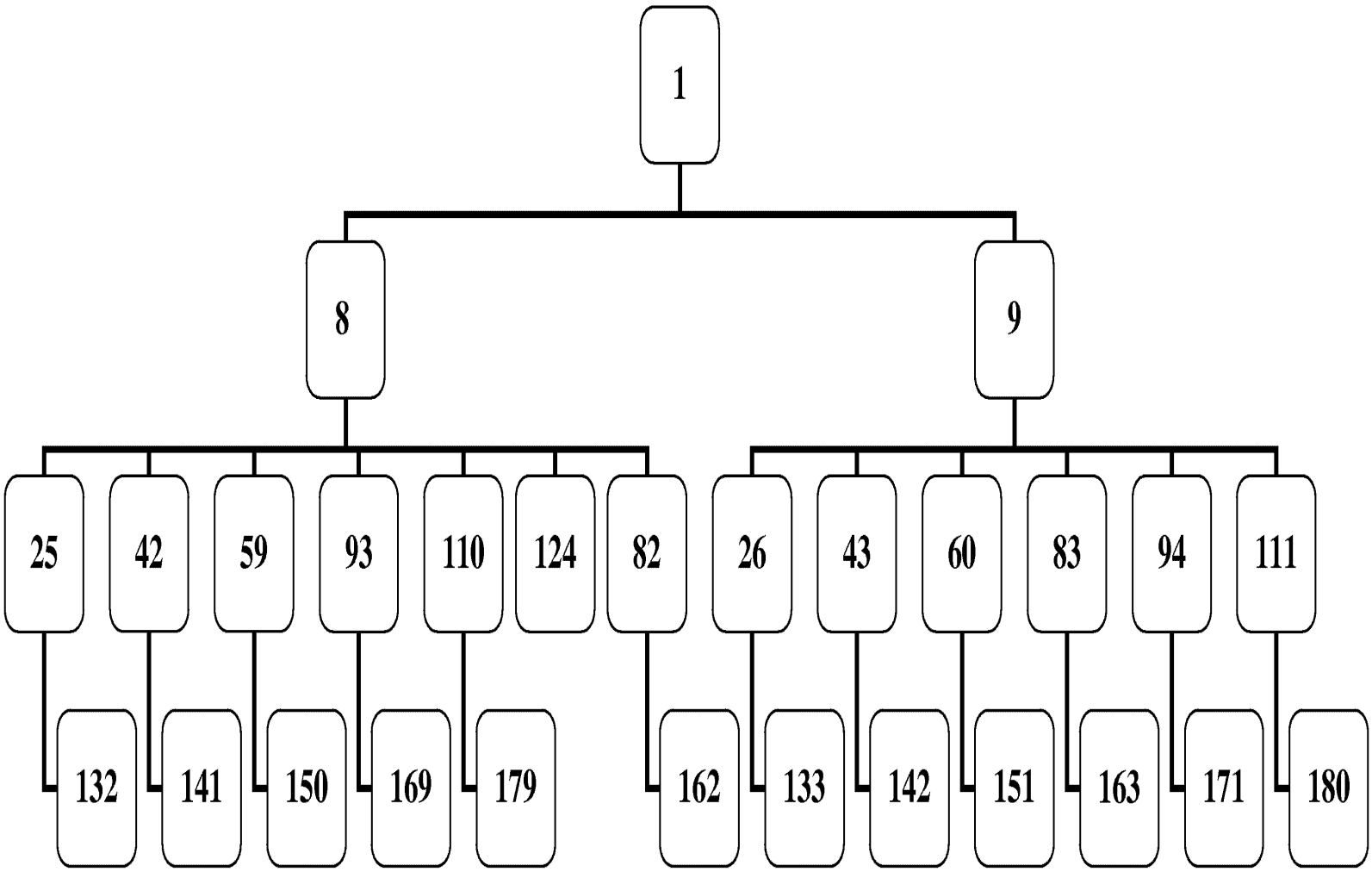

Petitioner Microsoft Corporation, Ex. 1002, p. 3095

Ser. No. 09/399,578

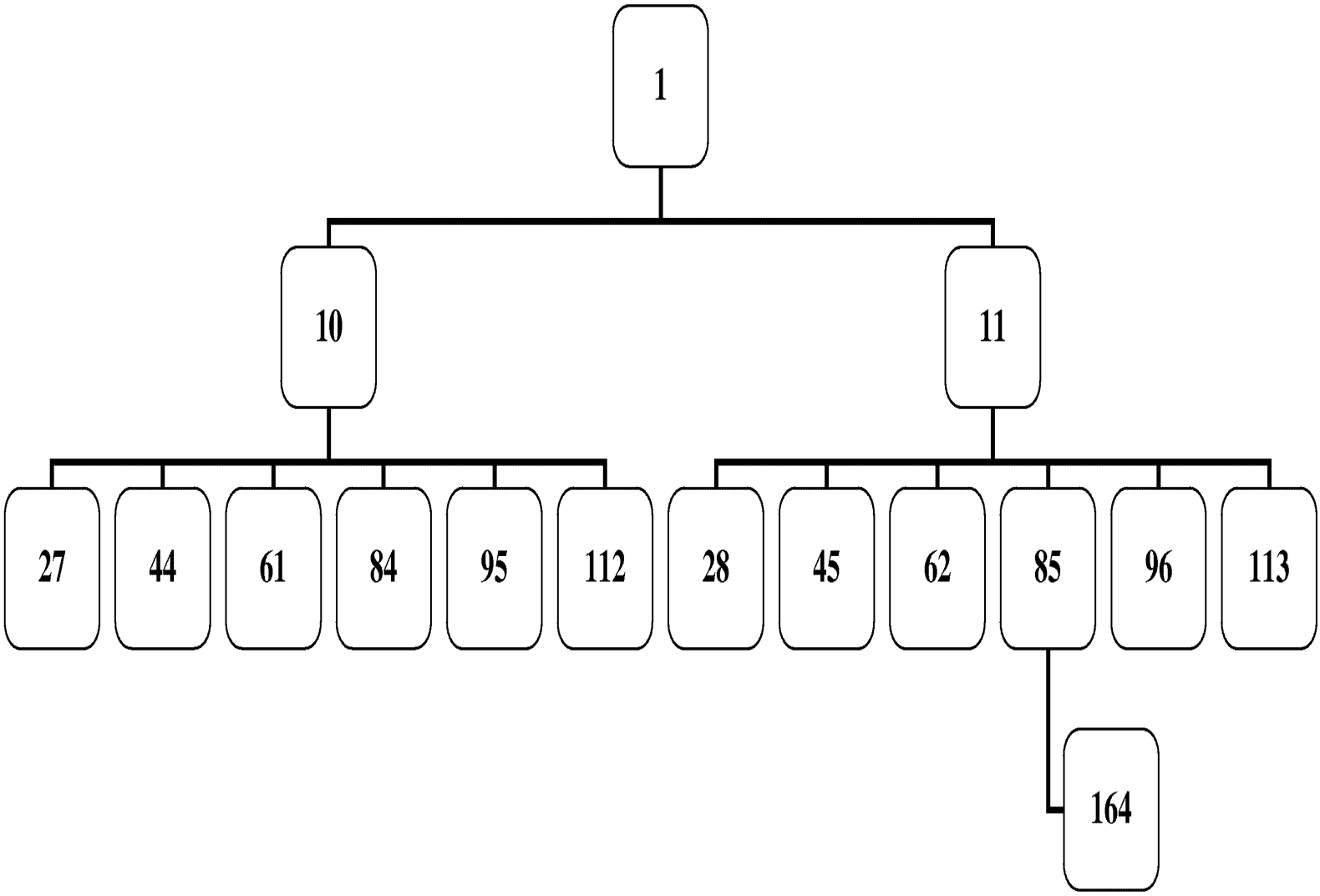

Petitioner Microsoft Corporation, Ex. 1002, p. 3096

Ser. No. 09/399,578

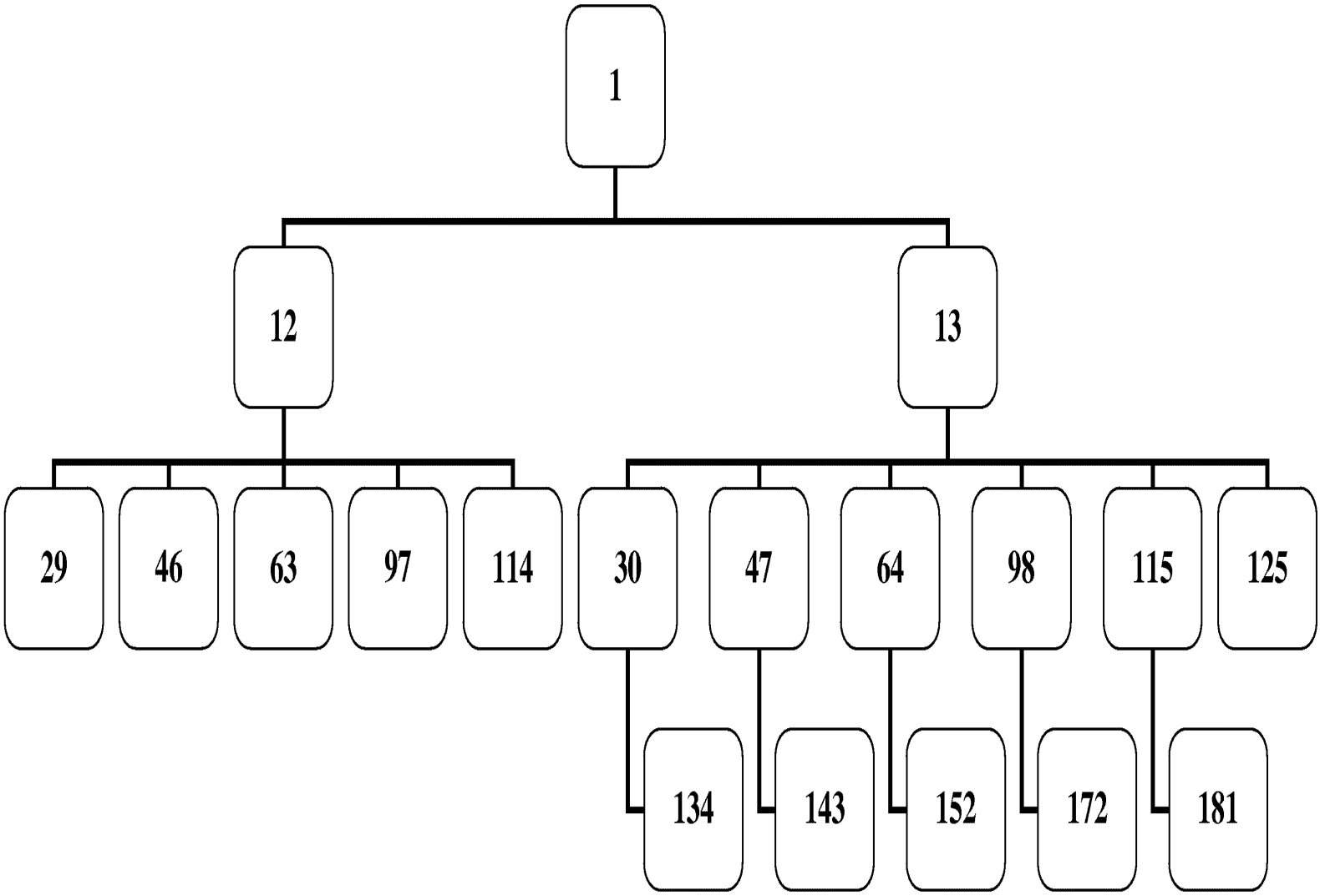

Petitioner Microsoft Corporation, Ex. 1002, p. 3097

Ser. No. 09/399,578

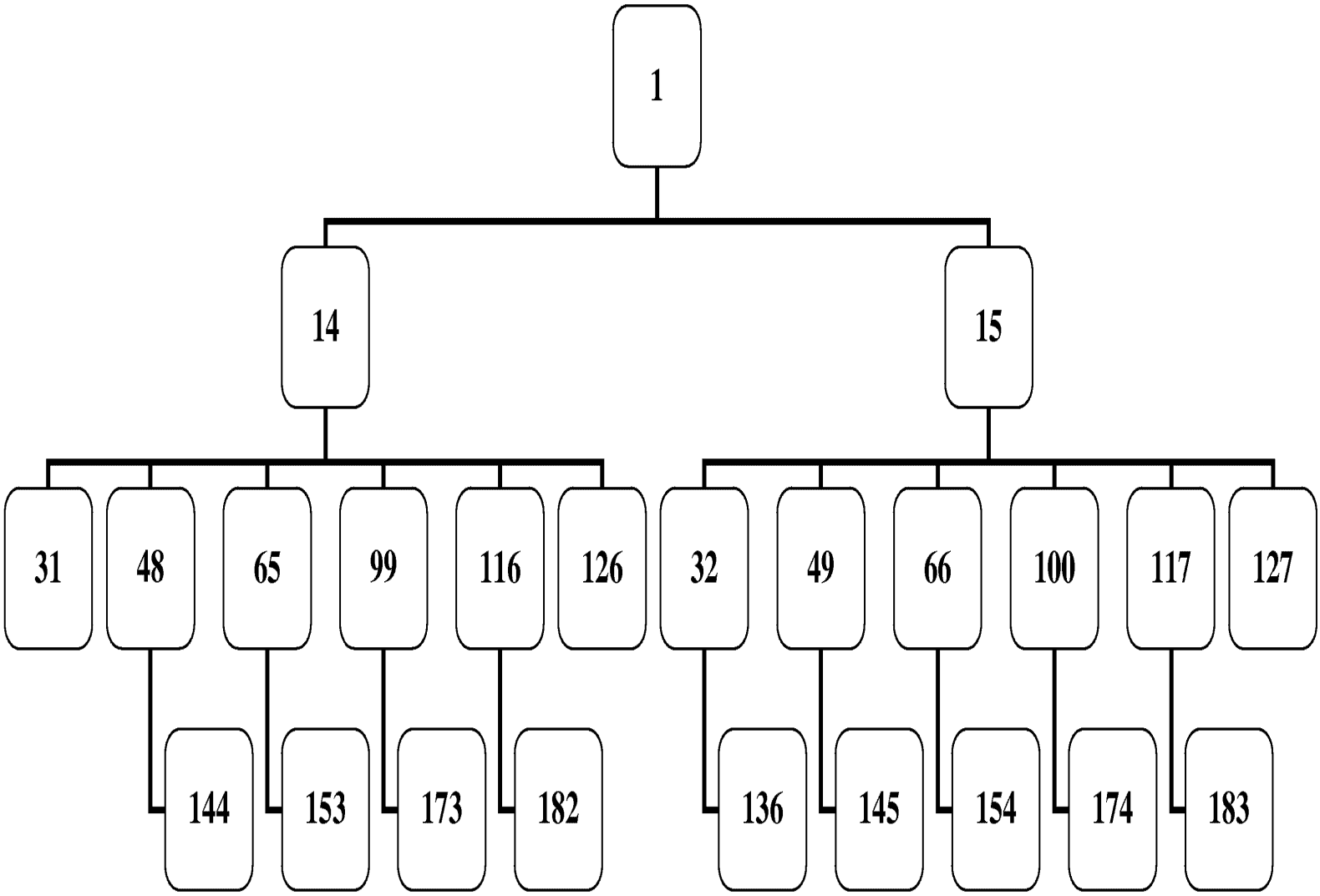

Ser. No. 09/399,578

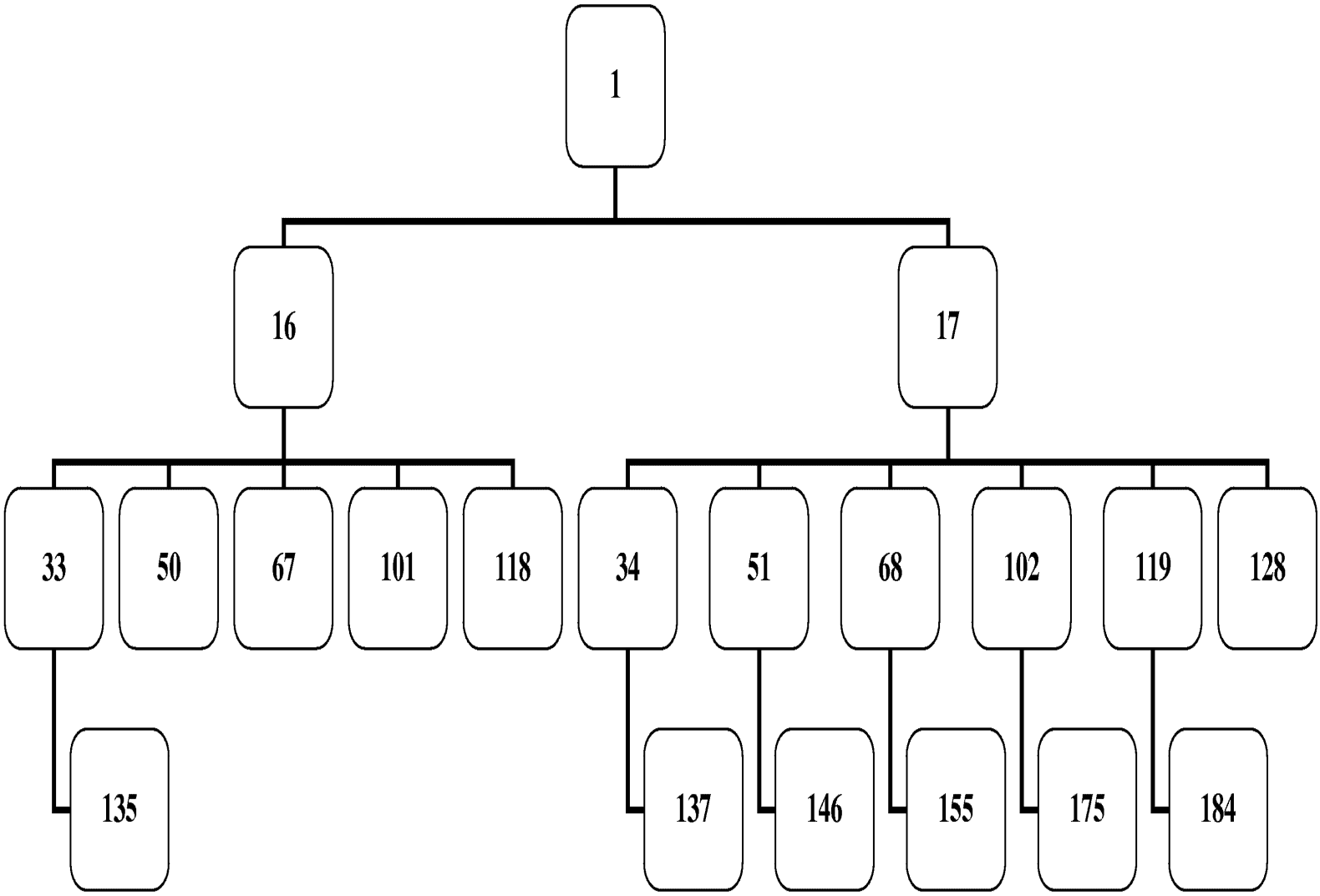

Petitioner Microsoft Corporation, Ex. 1002, p. 3099

Ser. No. 09/399,578

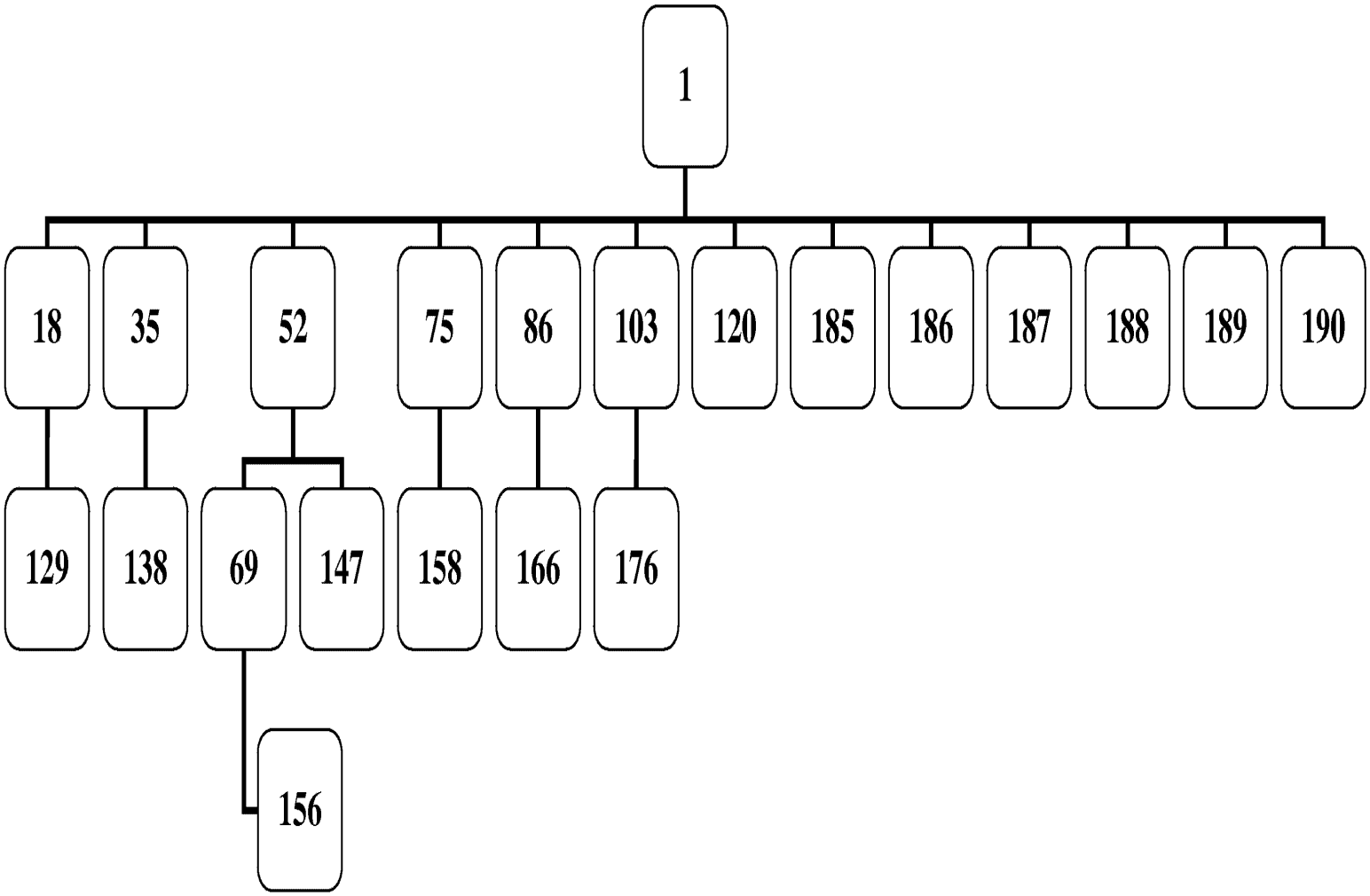

Ser. No. 09/399,578

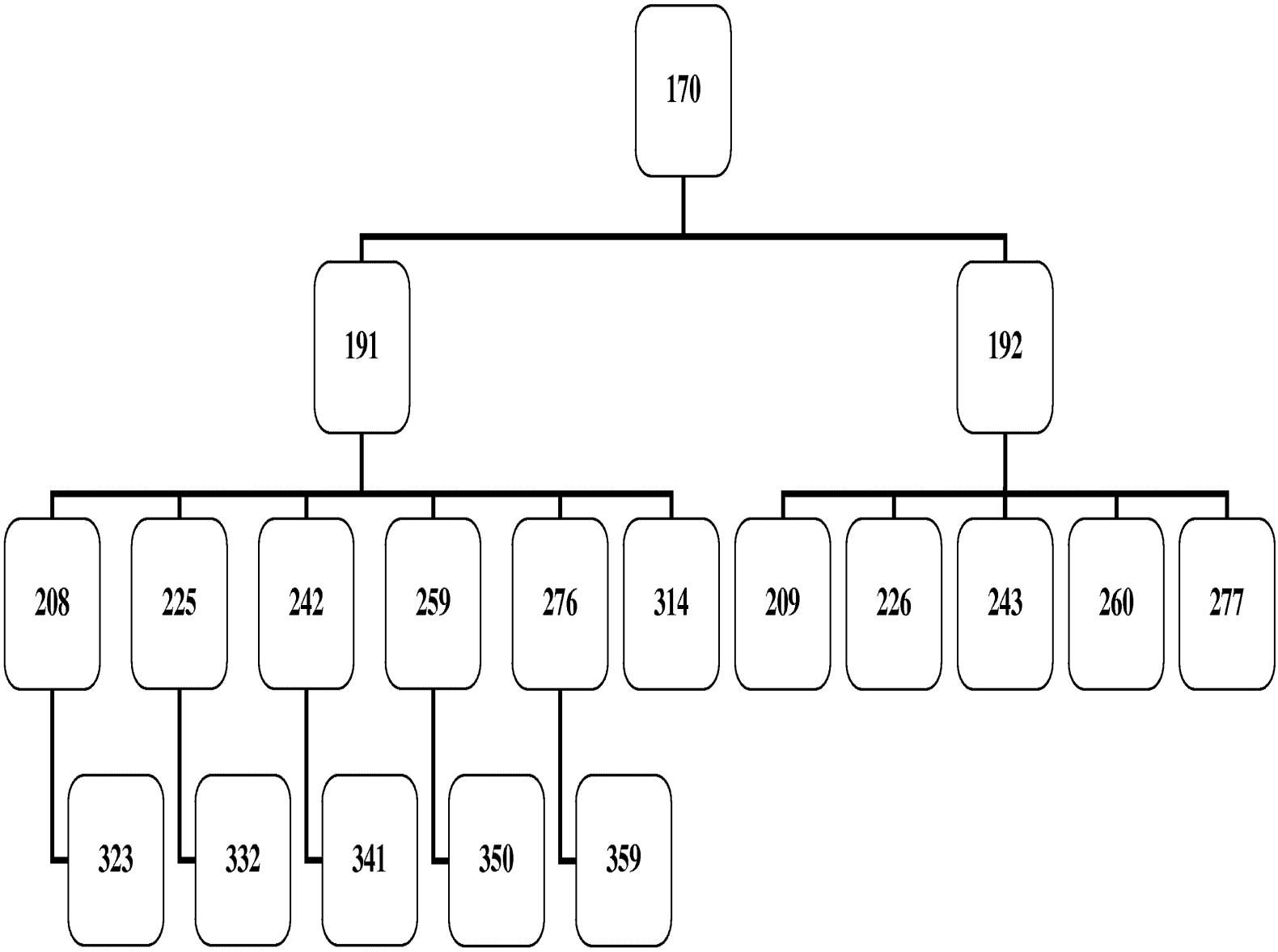

Petitioner Microsoft Corporation, Ex. 1002, p. 3101

Ser. No. 09/399,578

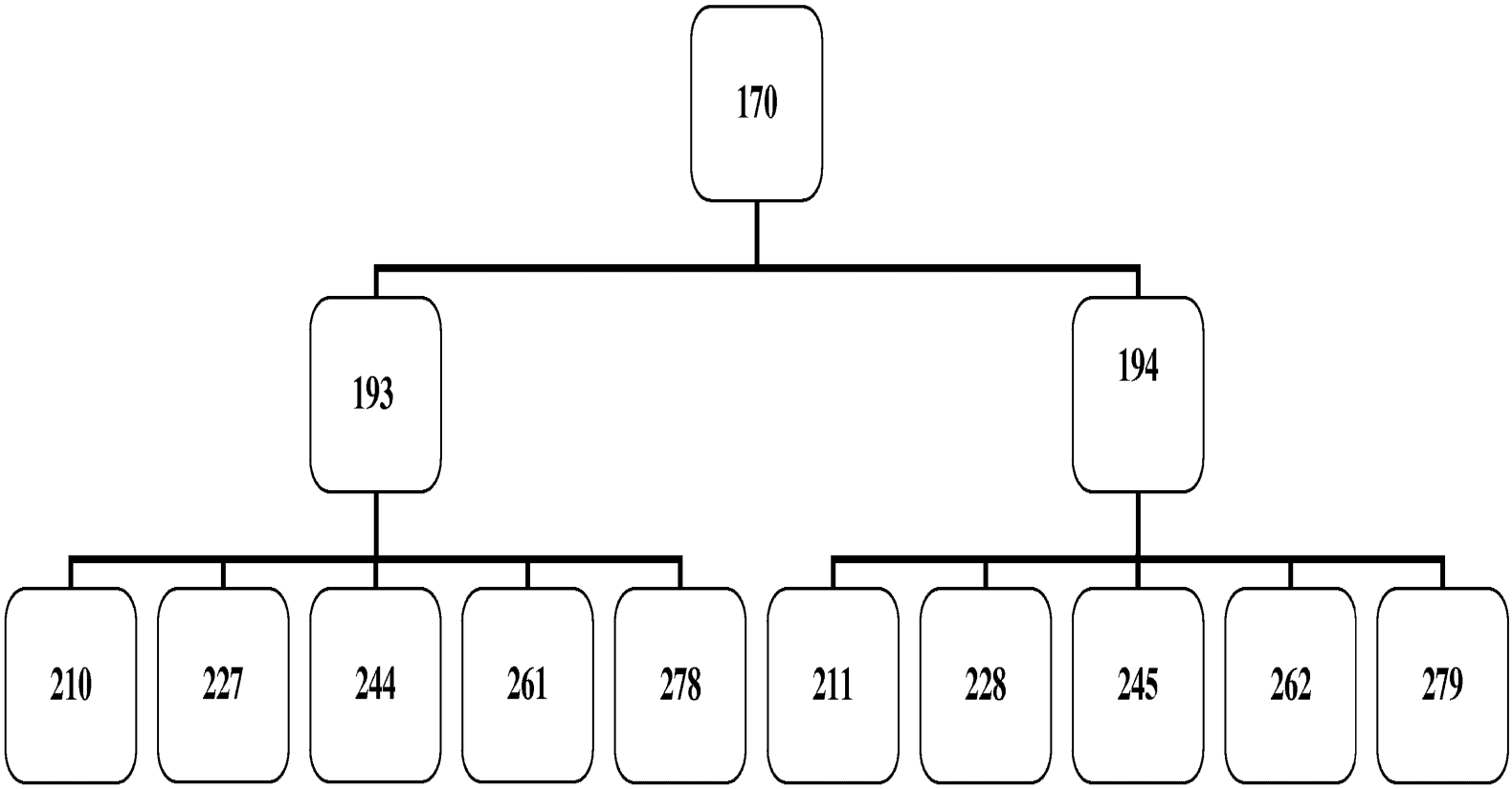

Ser. No. 09/399,578

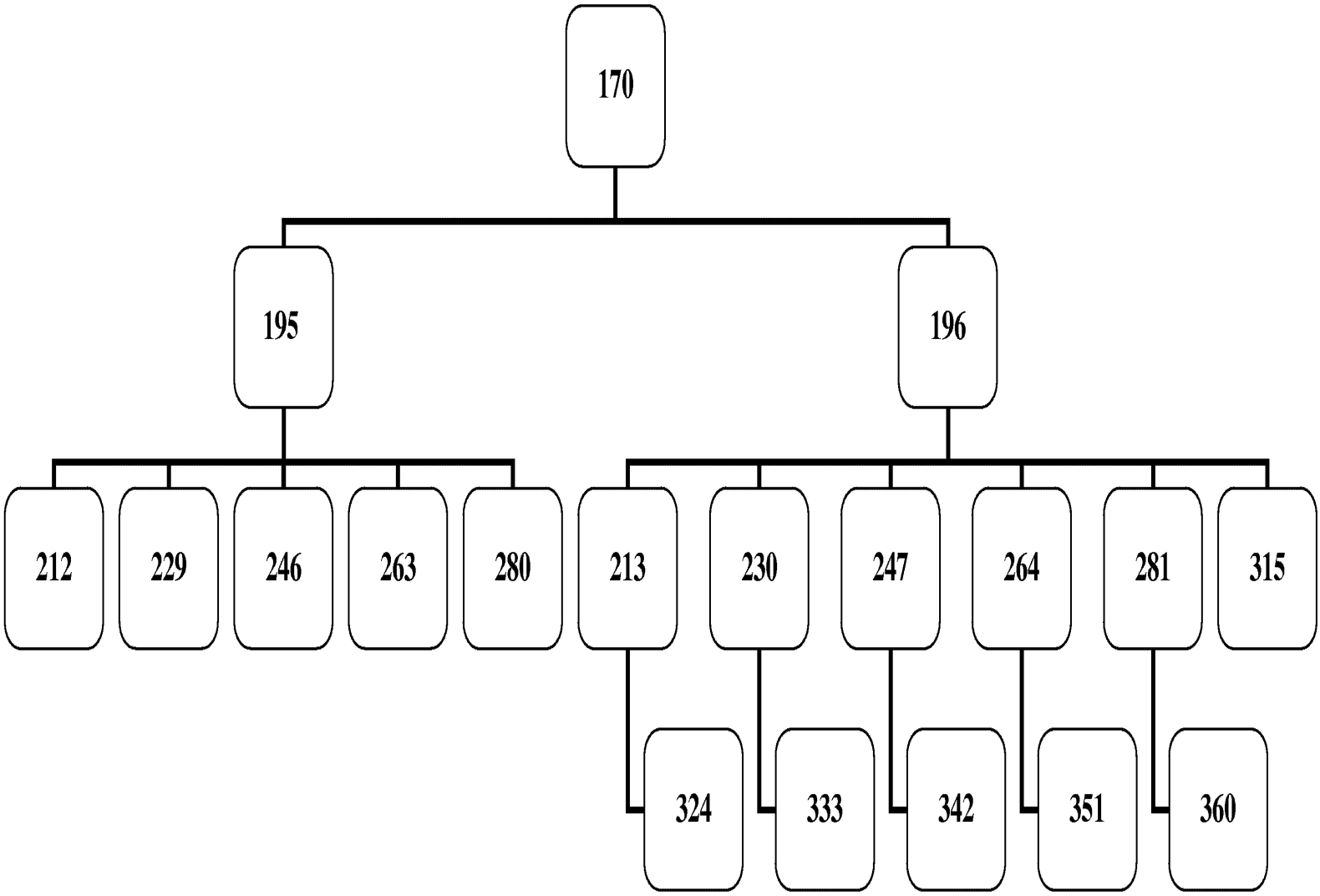

Petitioner Microsoft Corporation, Ex. 1002, p. 3103

Ser. No. 09/399,578

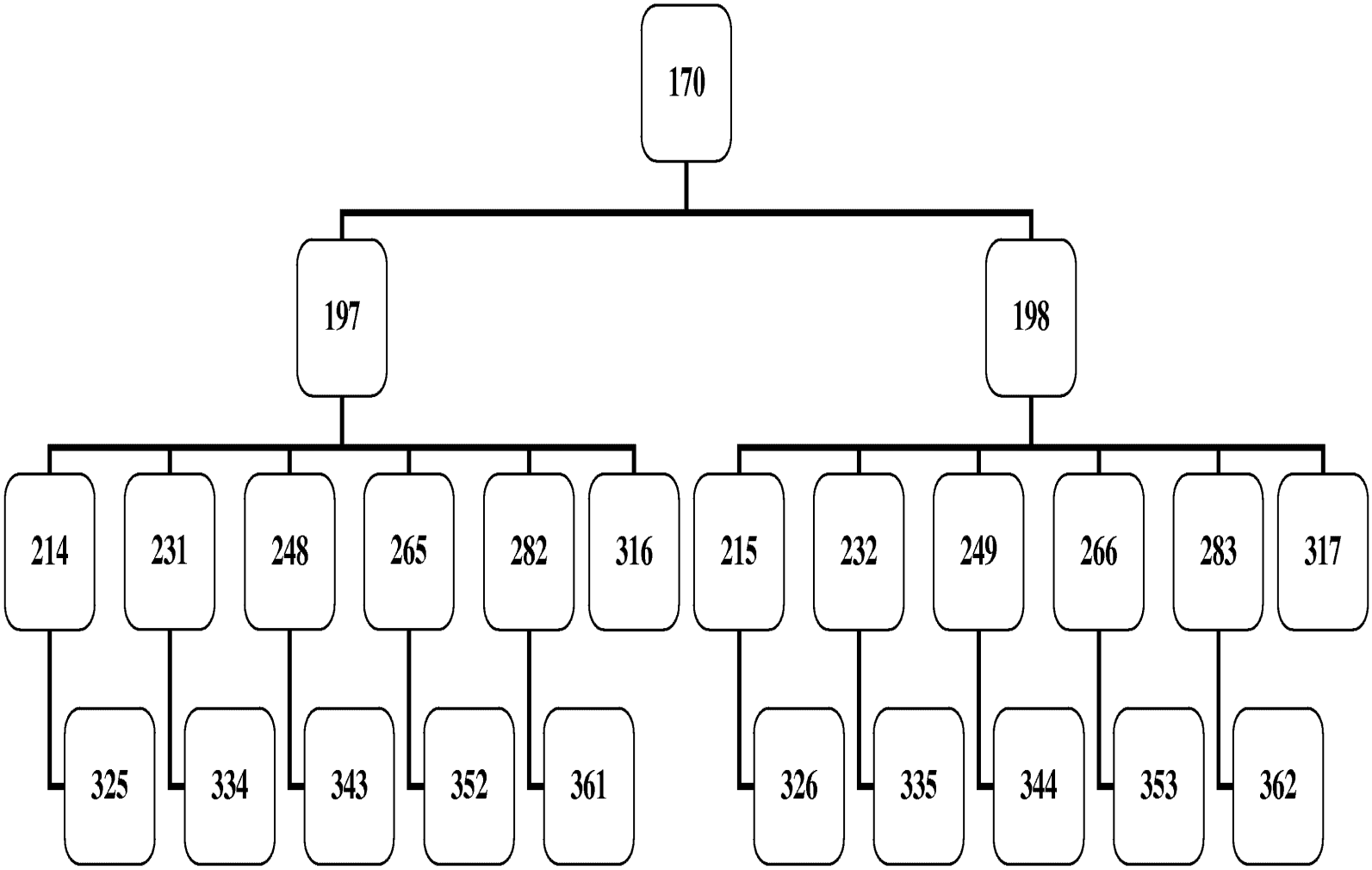

Petitioner Microsoft Corporation, Ex. 1002, p. 3104

Ser. No. 09/399,578

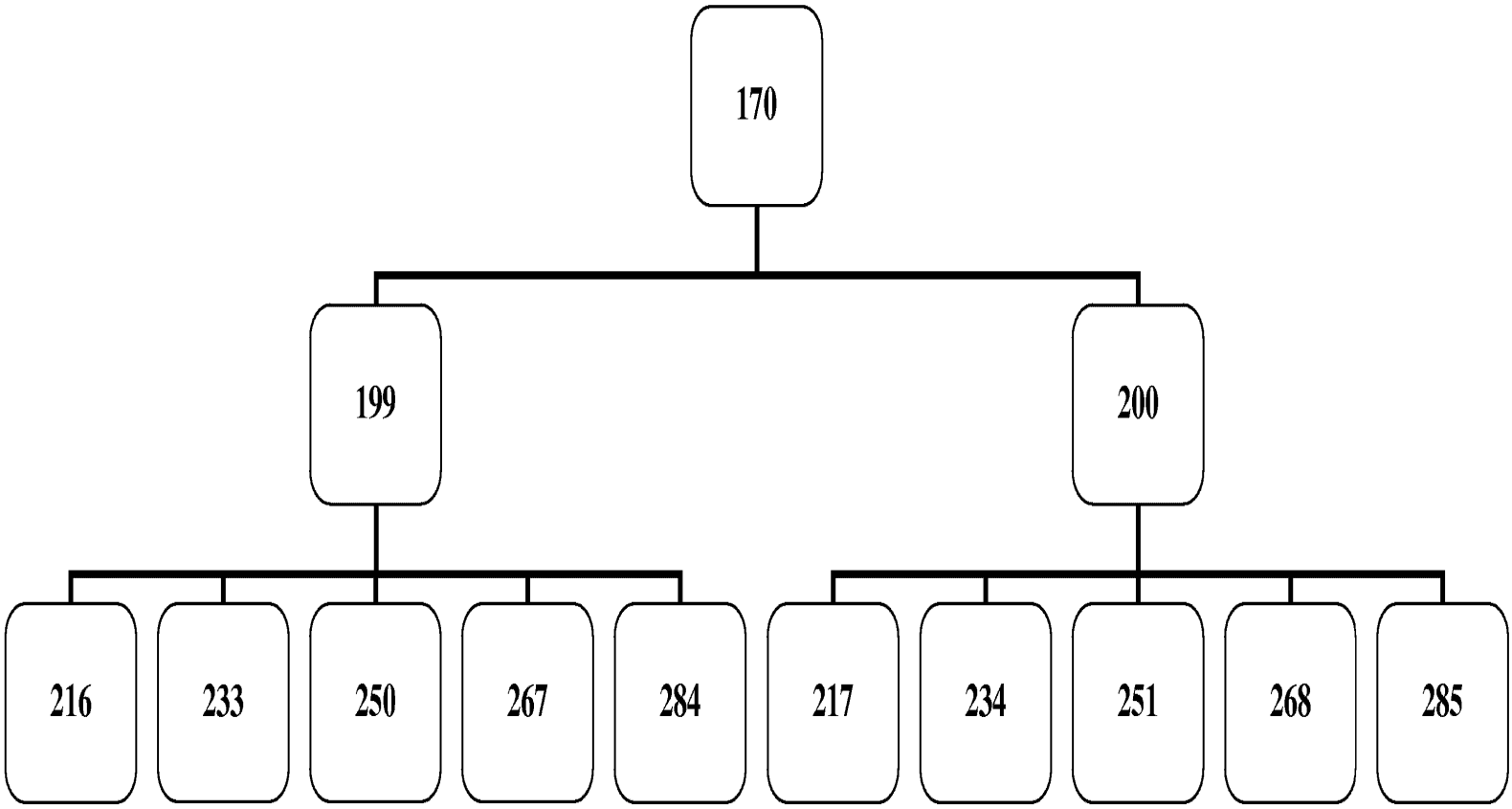

Ser. No. 09/399,578

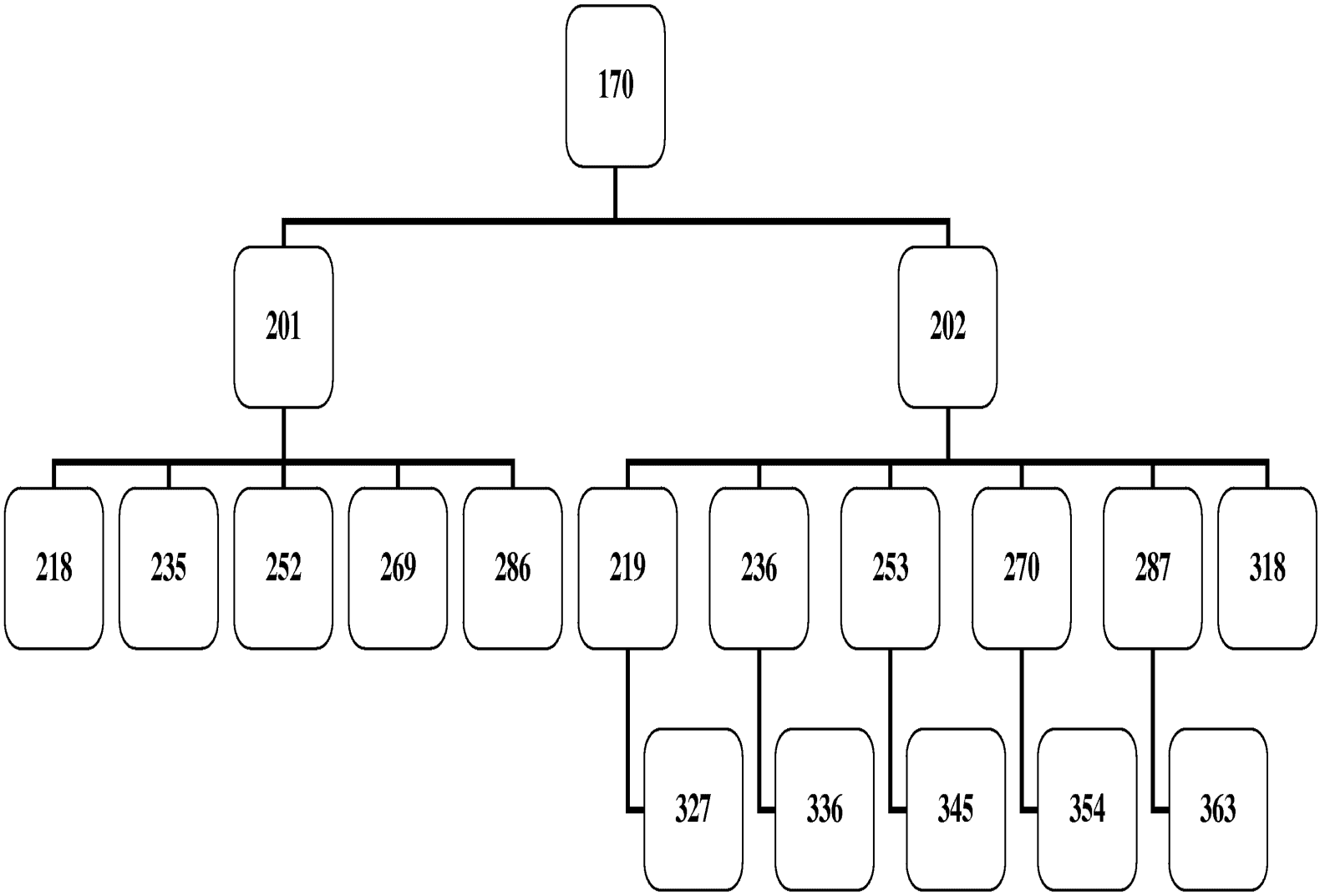

Petitioner Microsoft Corporation, Ex. 1002, p. 3106

Ser. No. 09/399,578

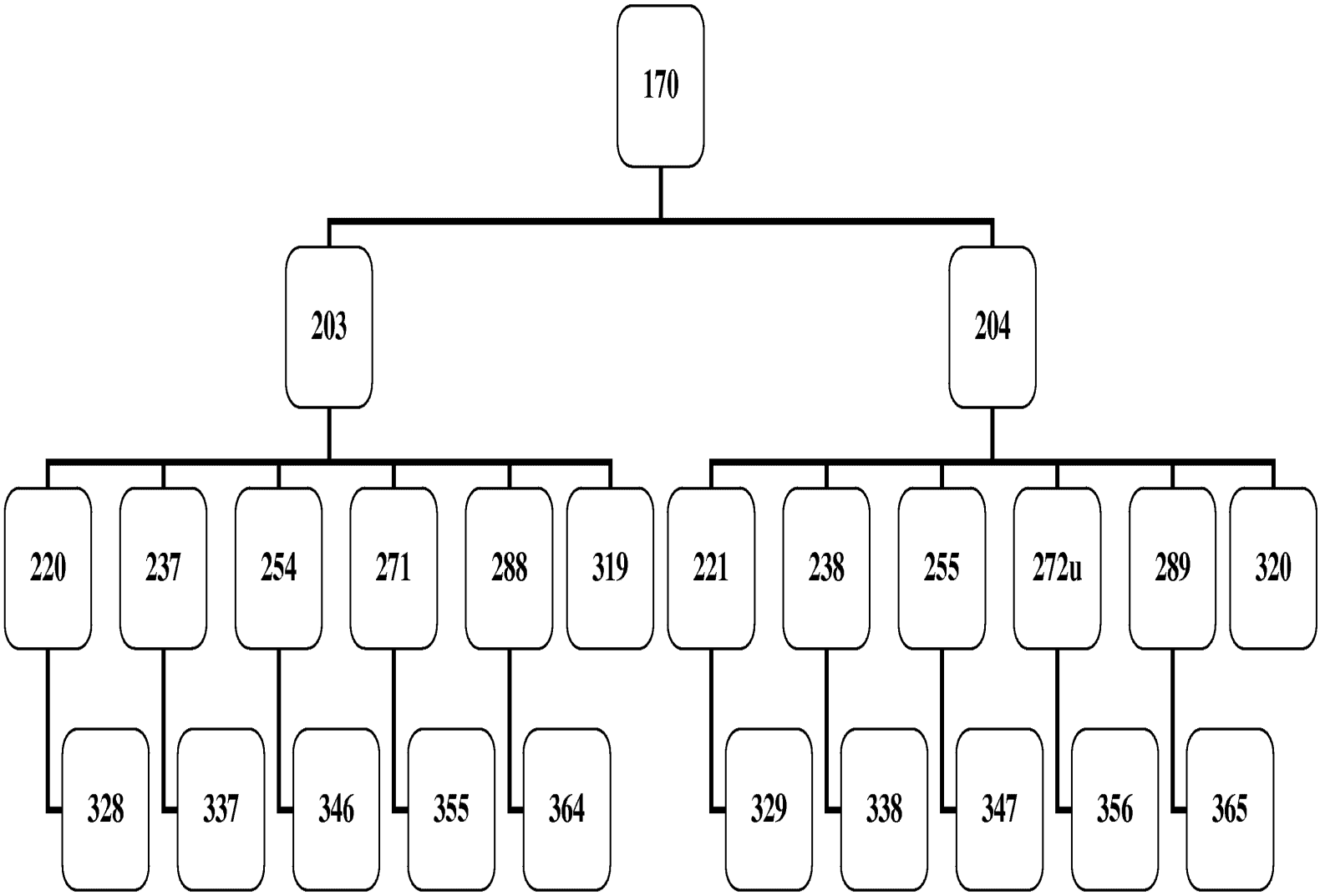

Petitioner Microsoft Corporation, Ex. 1002, p. 3107

Atty. Ref. AIS-P1-99
Art Unit 2145

Ser. No. 09/399,578

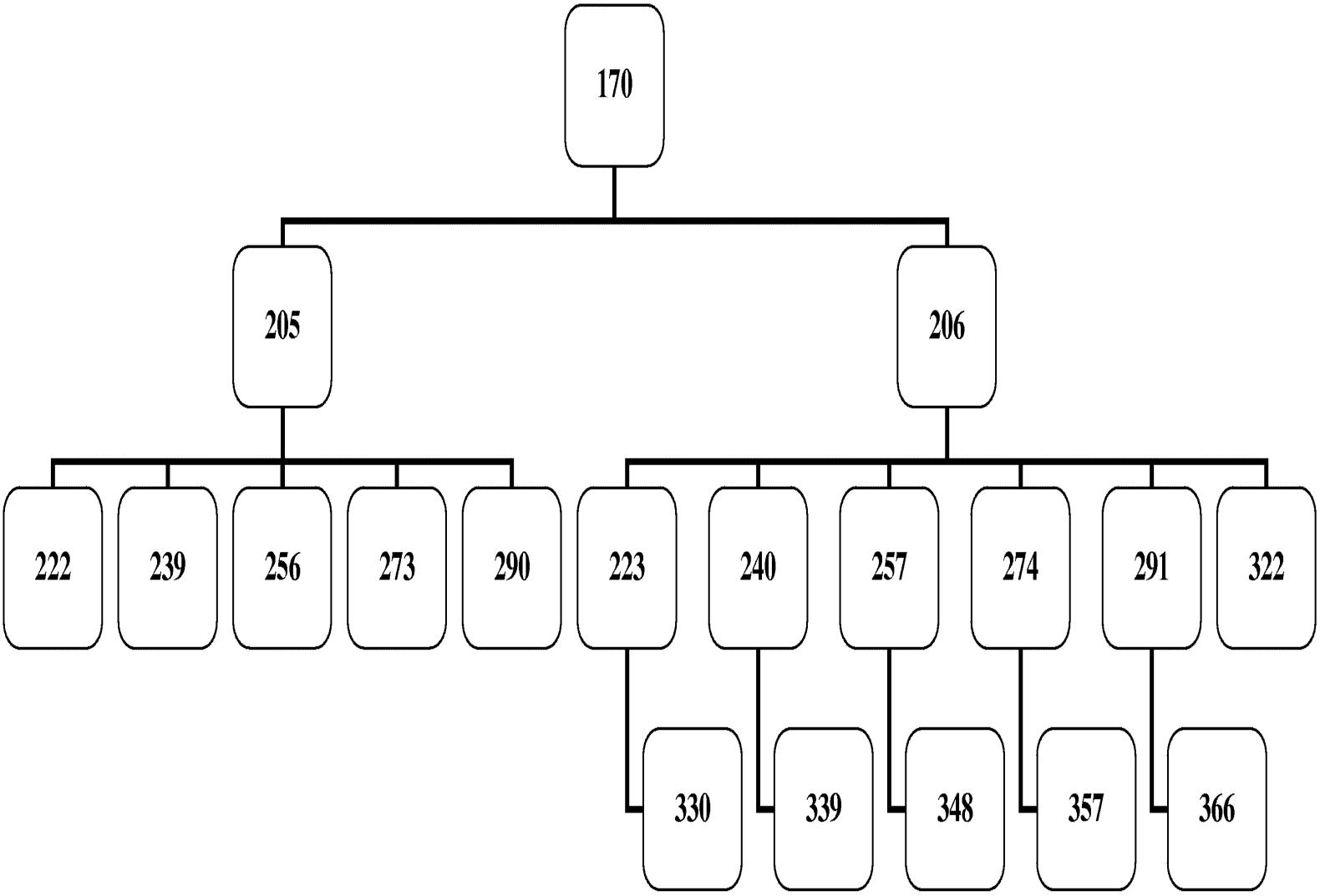

Ser. No. 09/399,578

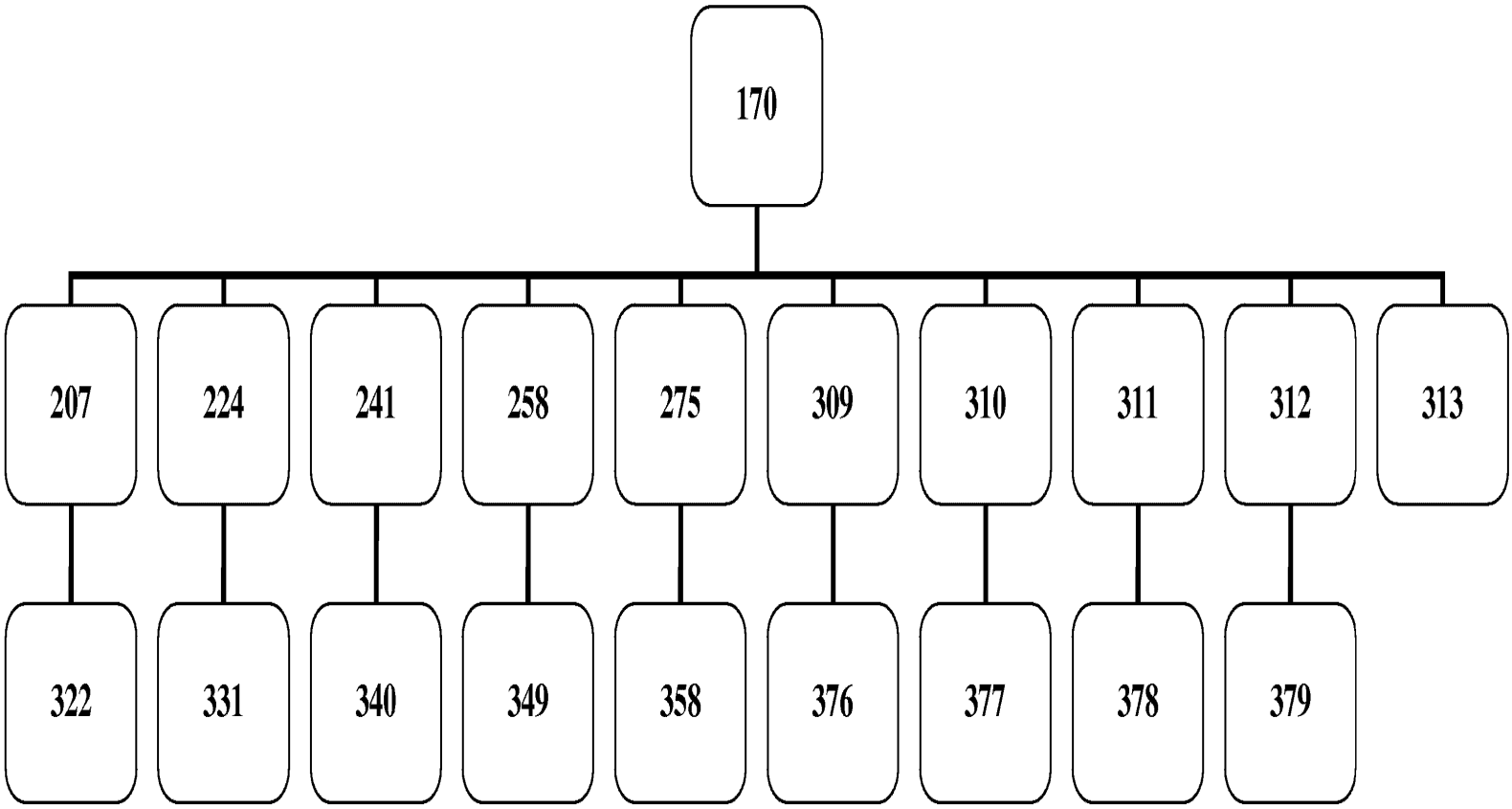

Ser. No. 09/399,578

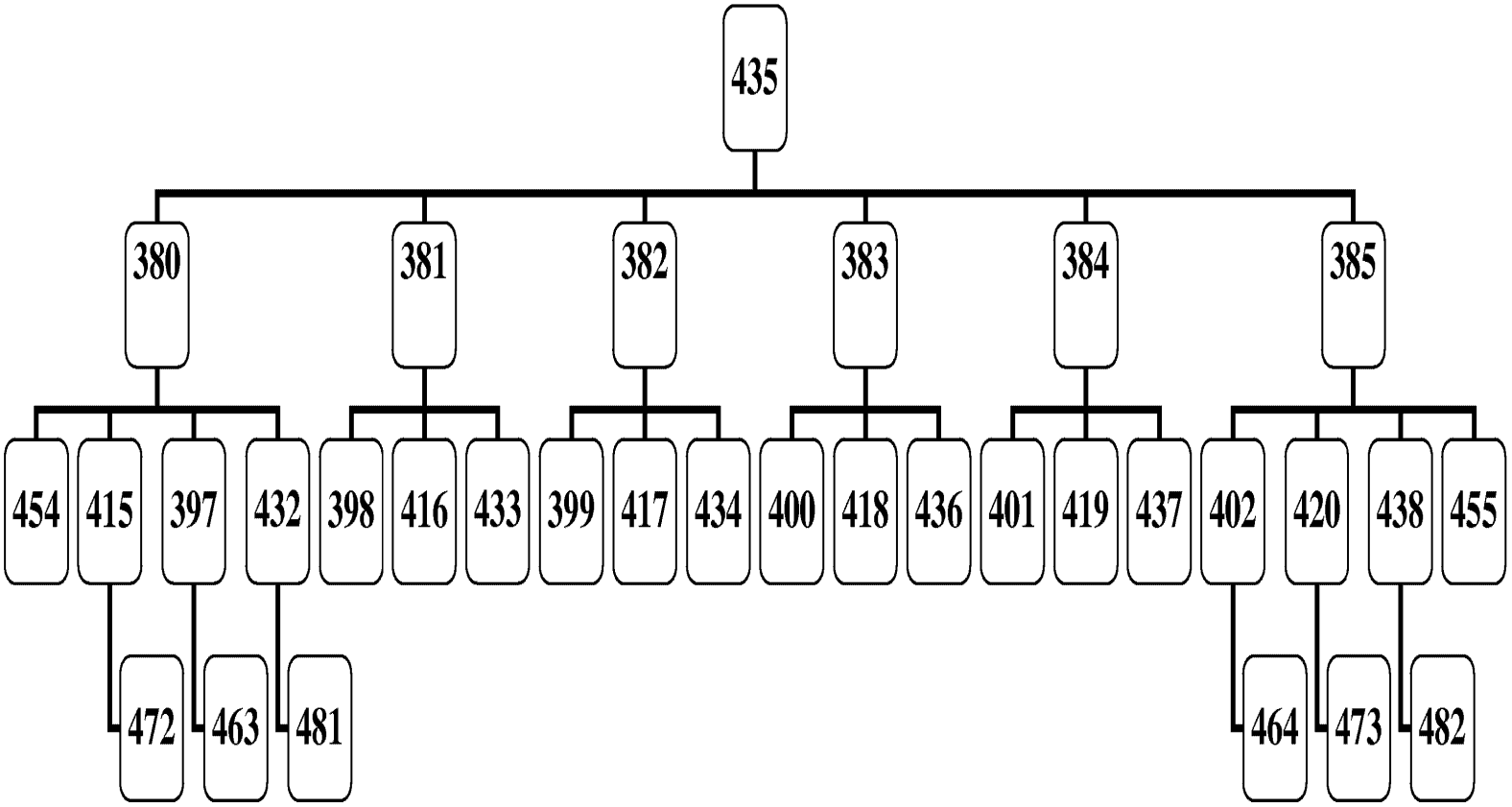

Ser. No. 09/399,578

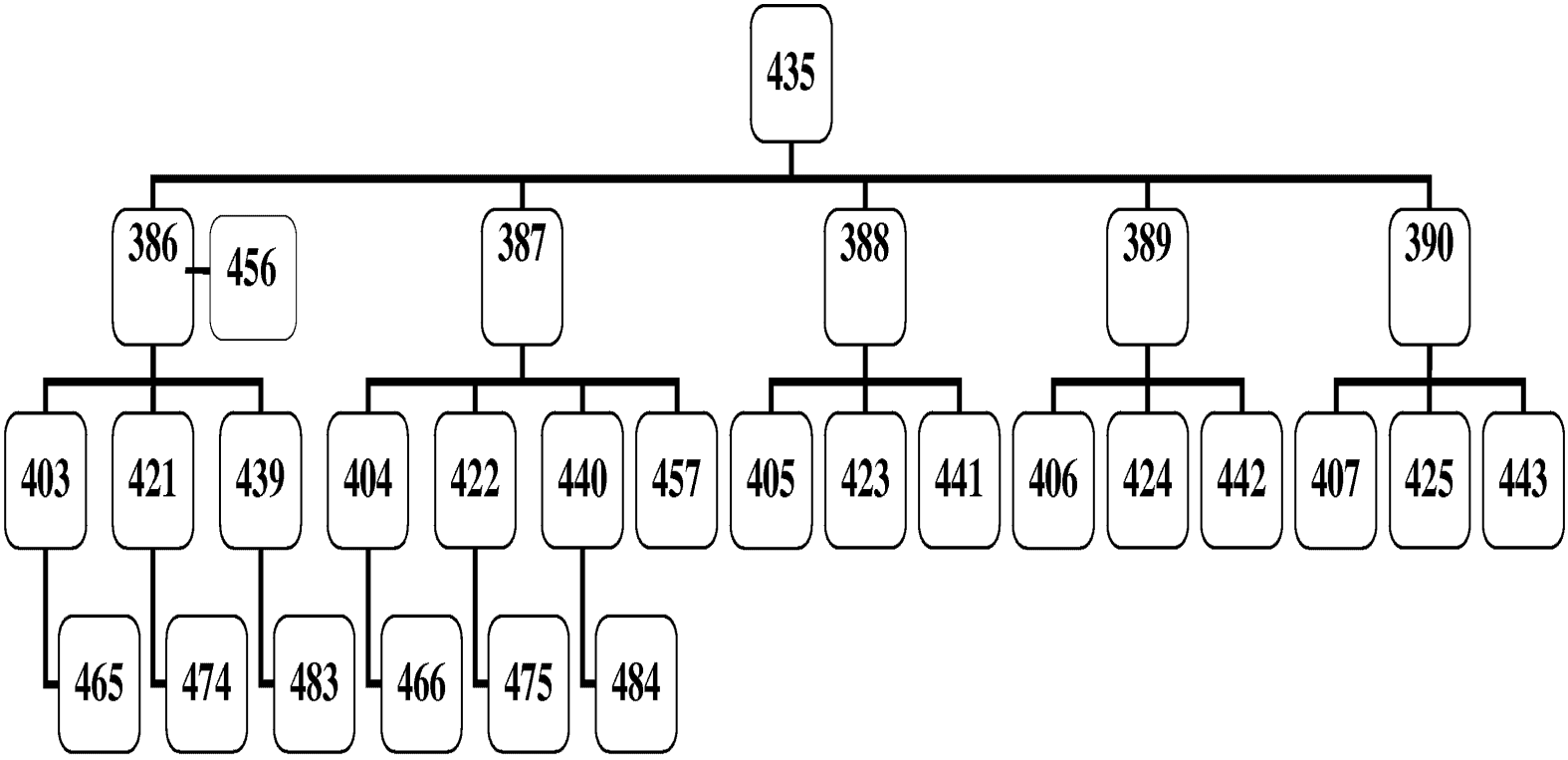

Petitioner Microsoft Corporation, Ex. 1002, p. 3111

Ser. No. 09/399,578

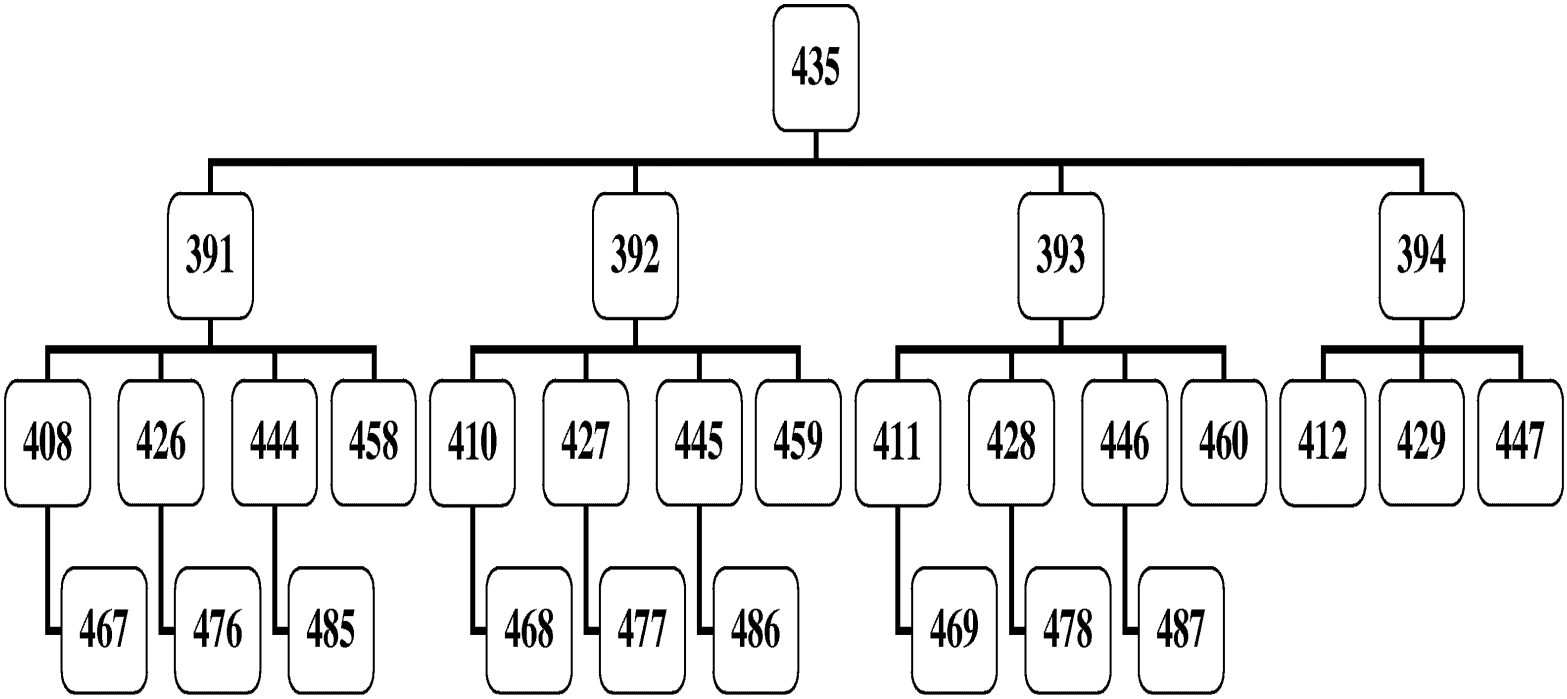

Petitioner Microsoft Corporation, Ex. 1002, p. 3112

Ser. No. 09/399,578

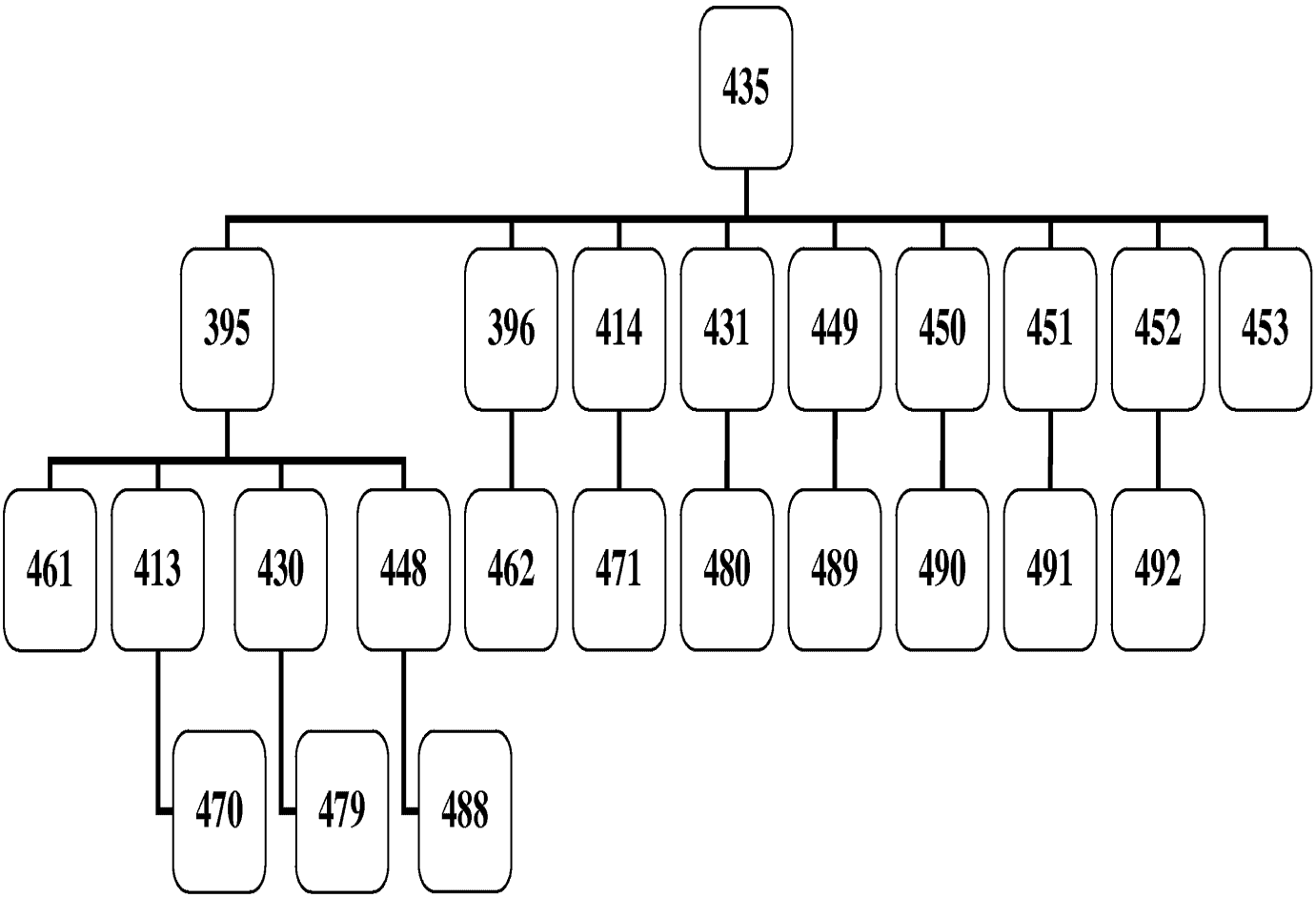

Petitioner Microsoft Corporation, Ex. 1002, p. 3113

Ser. No. 09/399,578

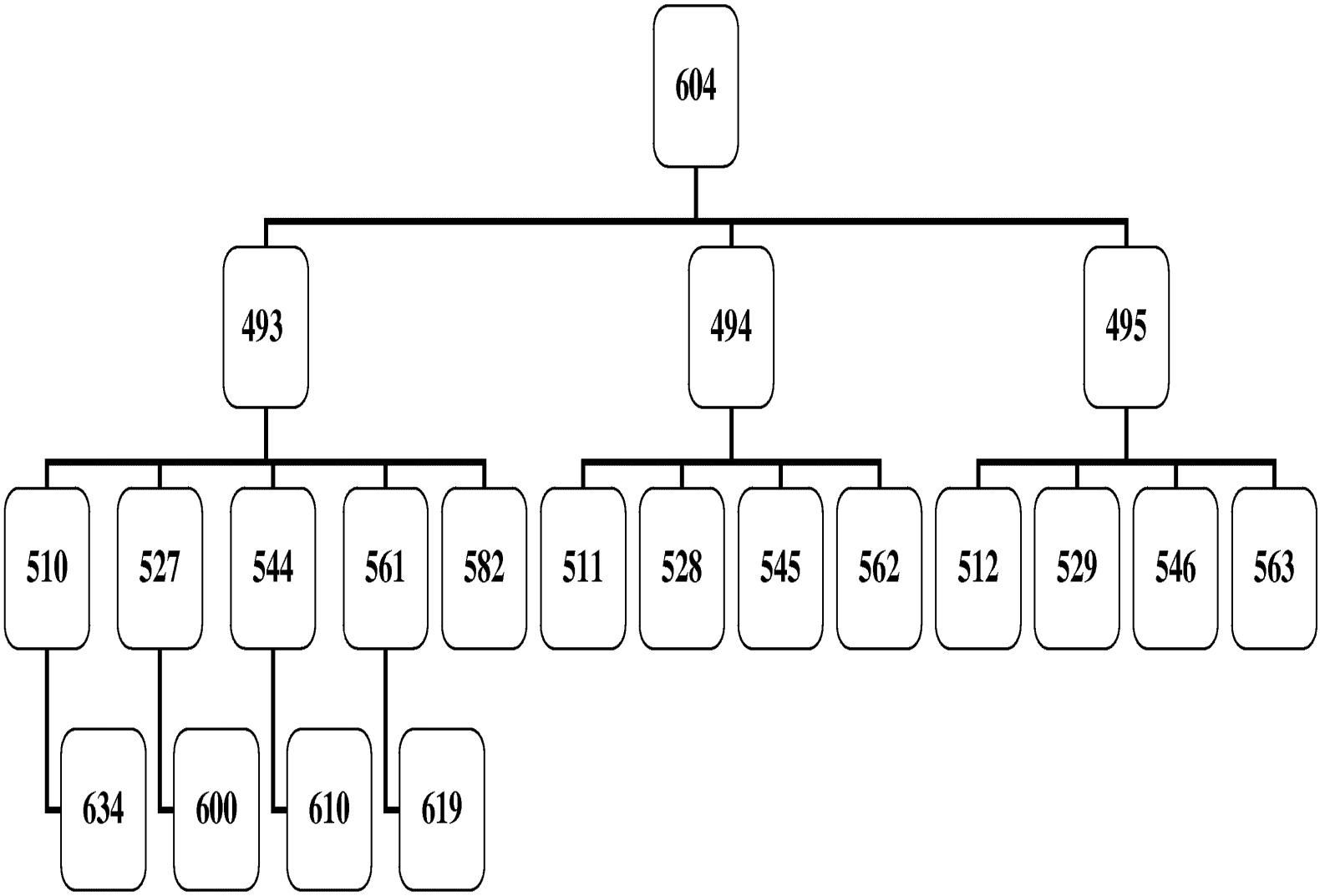

Petitioner Microsoft Corporation, Ex. 1002, p. 3114

Ser. No. 09/399,578

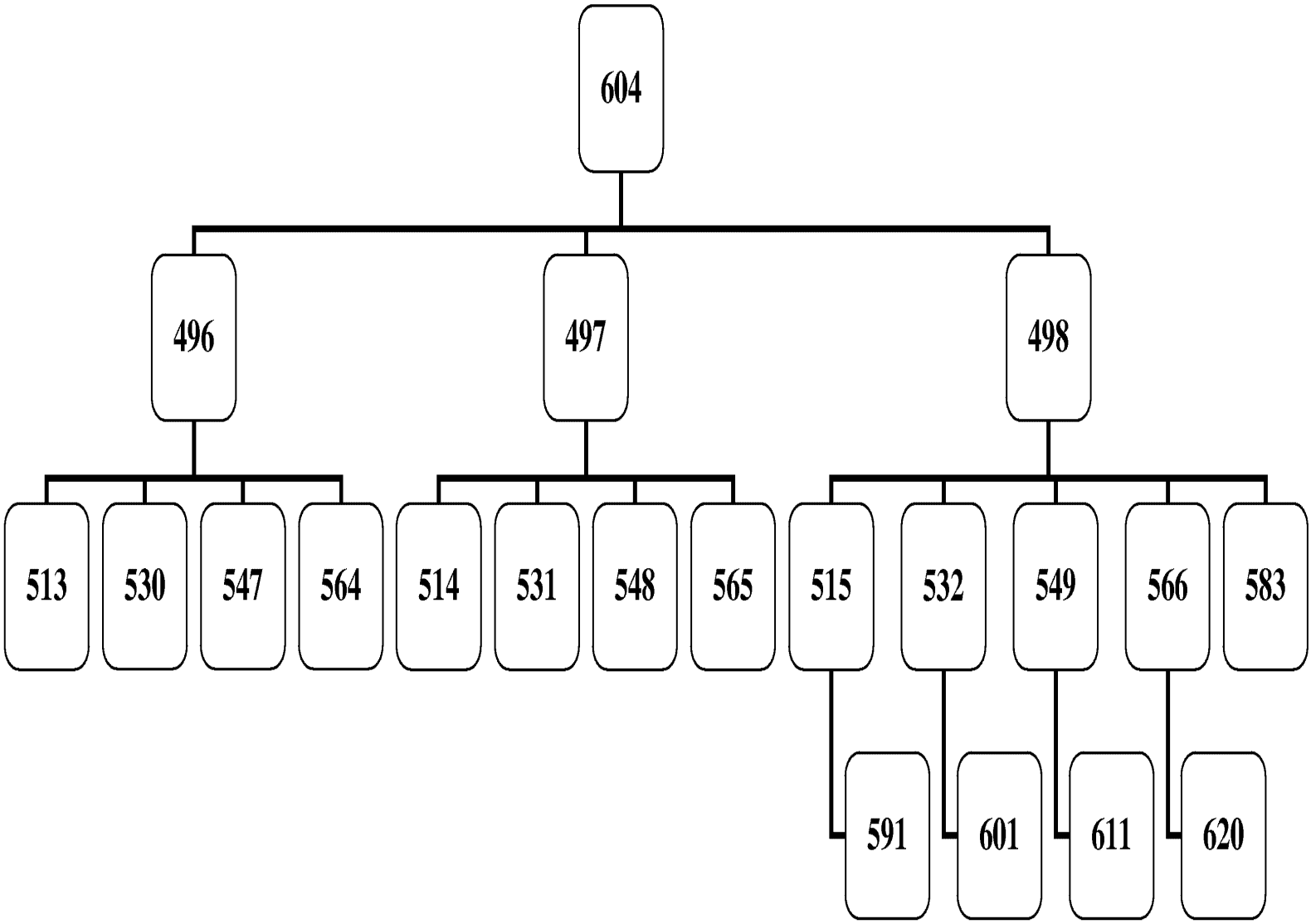

Ser. No. 09/399,578

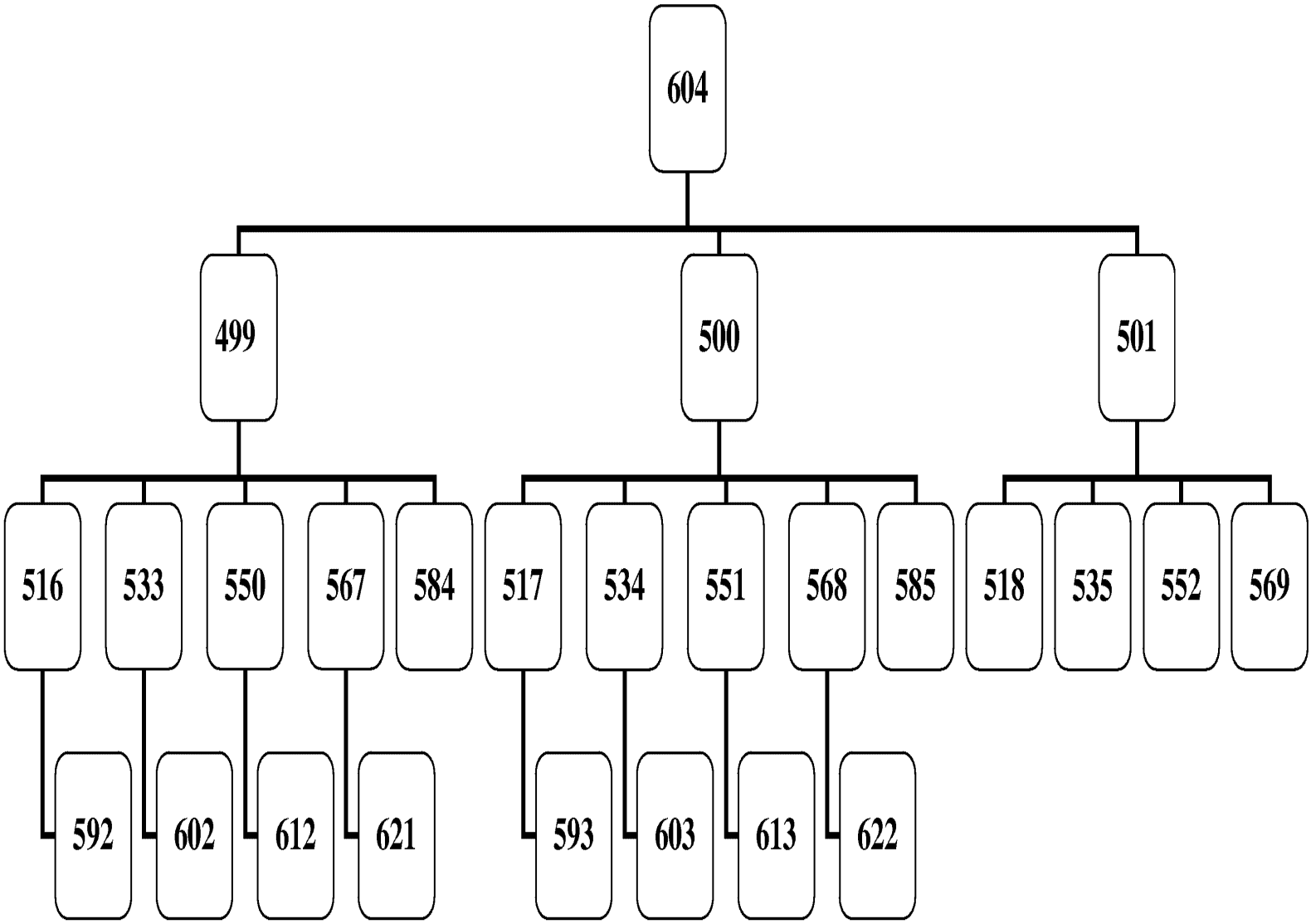

Ser. No. 09/399,578

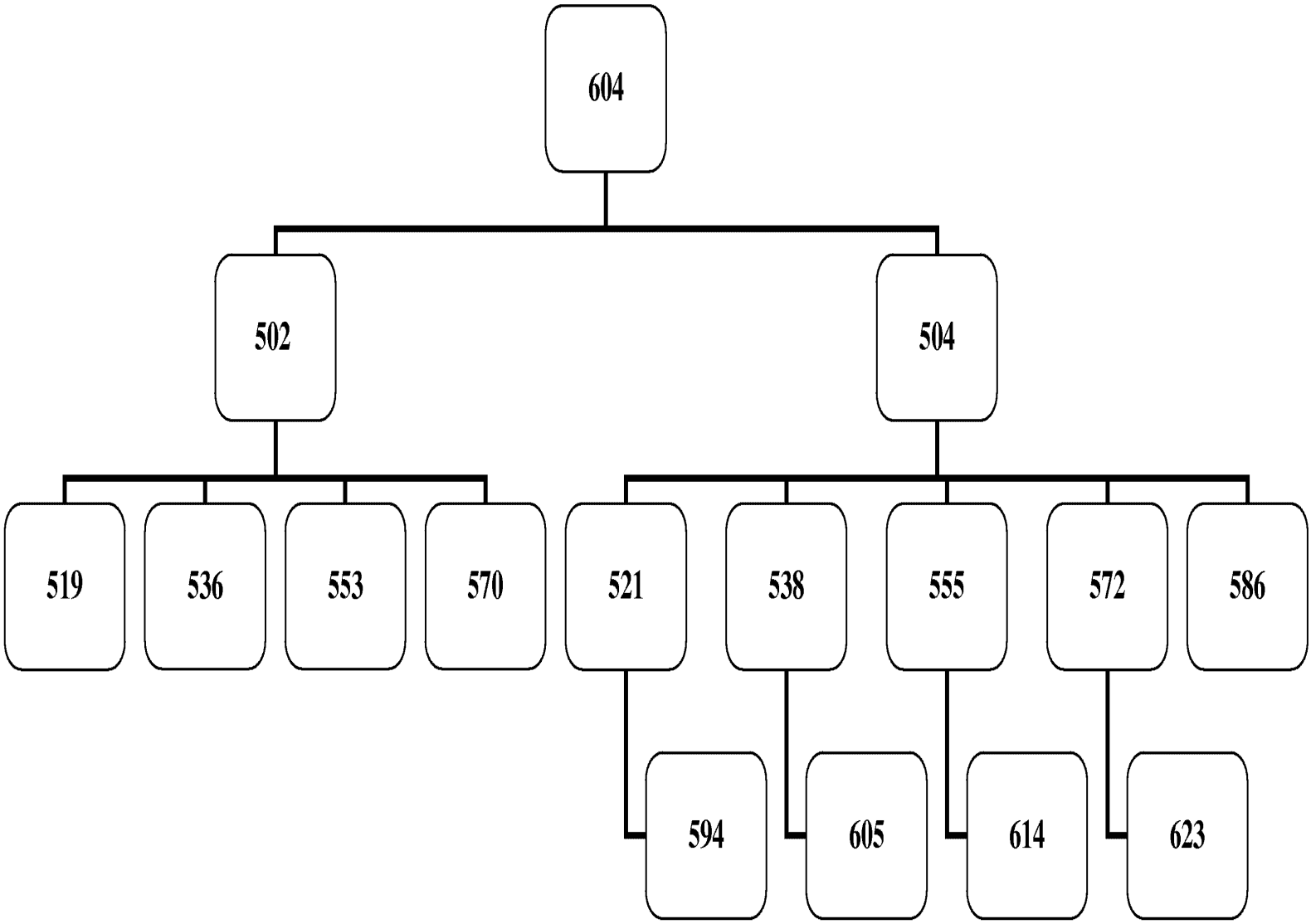

Petitioner Microsoft Corporation, Ex. 1002, p. 3117

Ser. No. 09/399,578

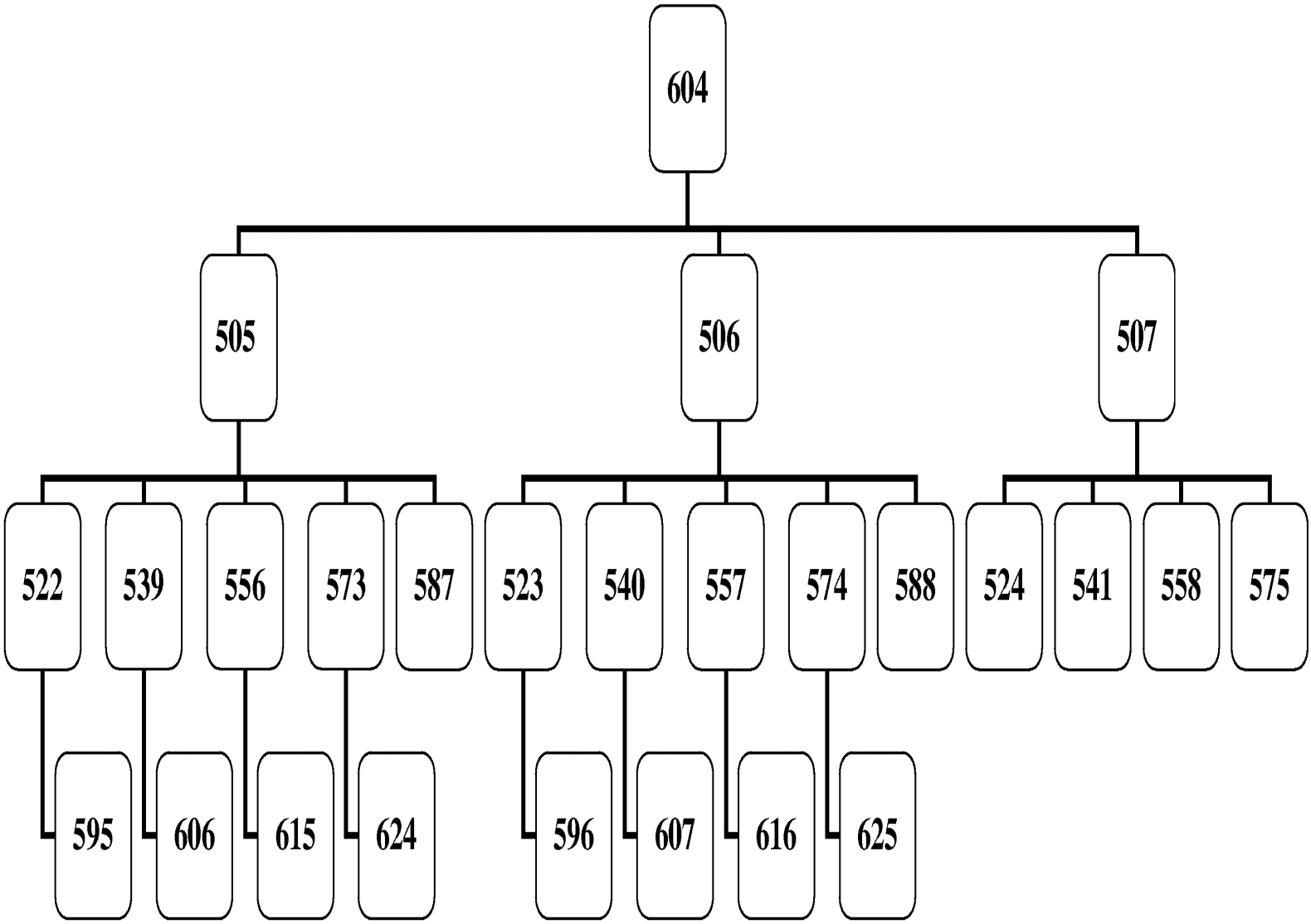

Ser. No. 09/399,578

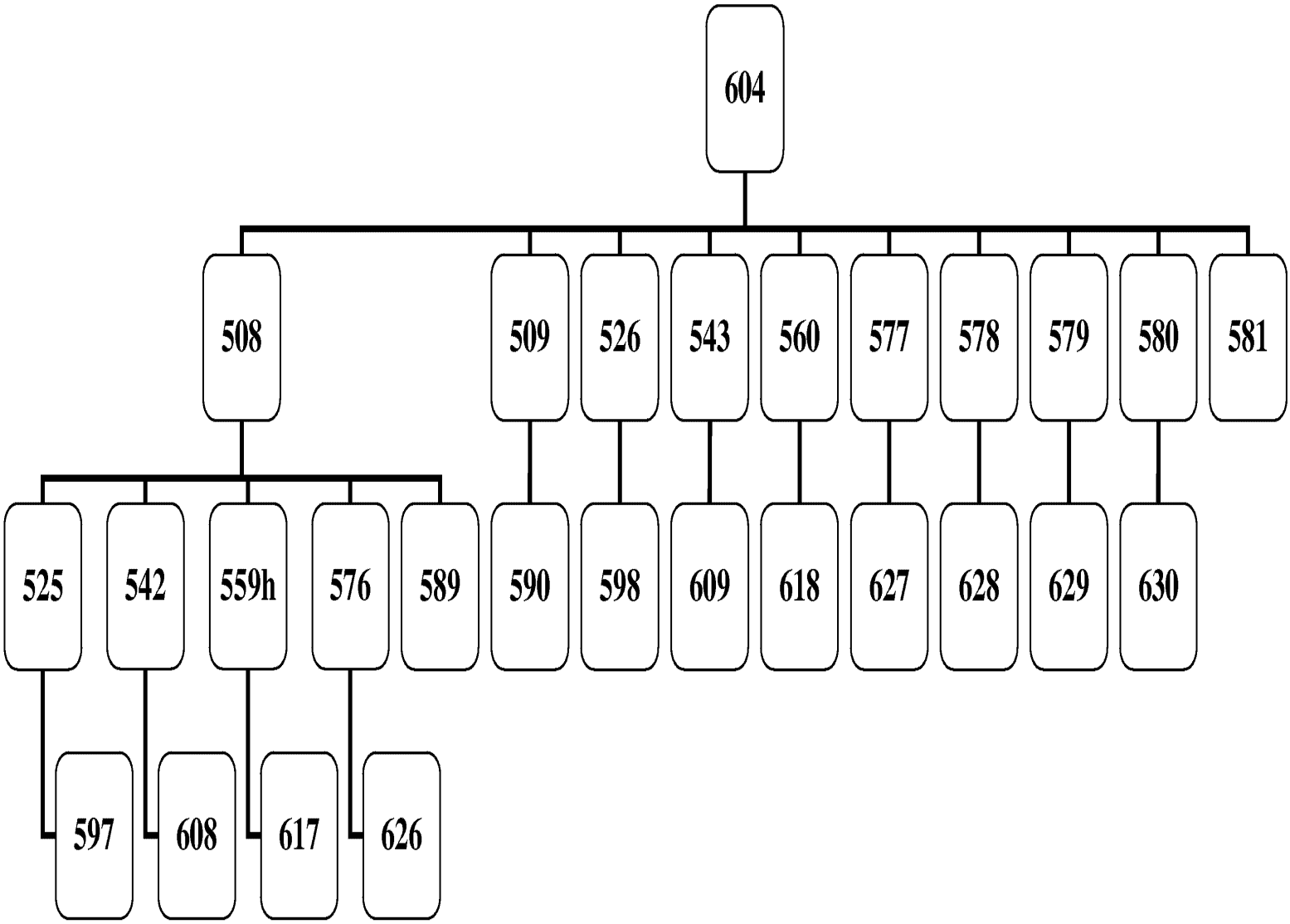

Petitioner Microsoft Corporation, Ex. 1002, p. 3119

Ser. No. 09/399,578

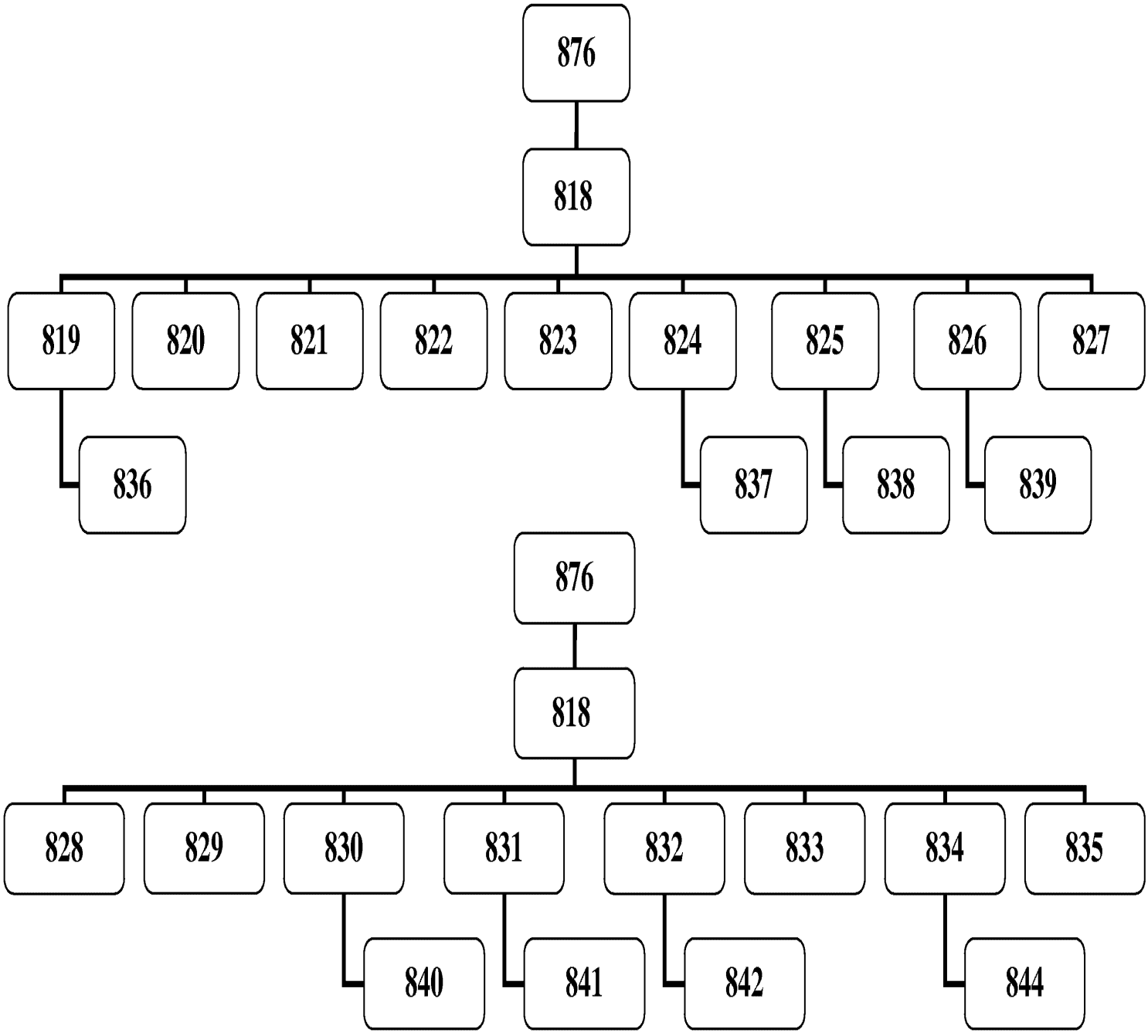

Petitioner Microsoft Corporation, Ex. 1002, p. 3120

Ser. No. 09/399,578

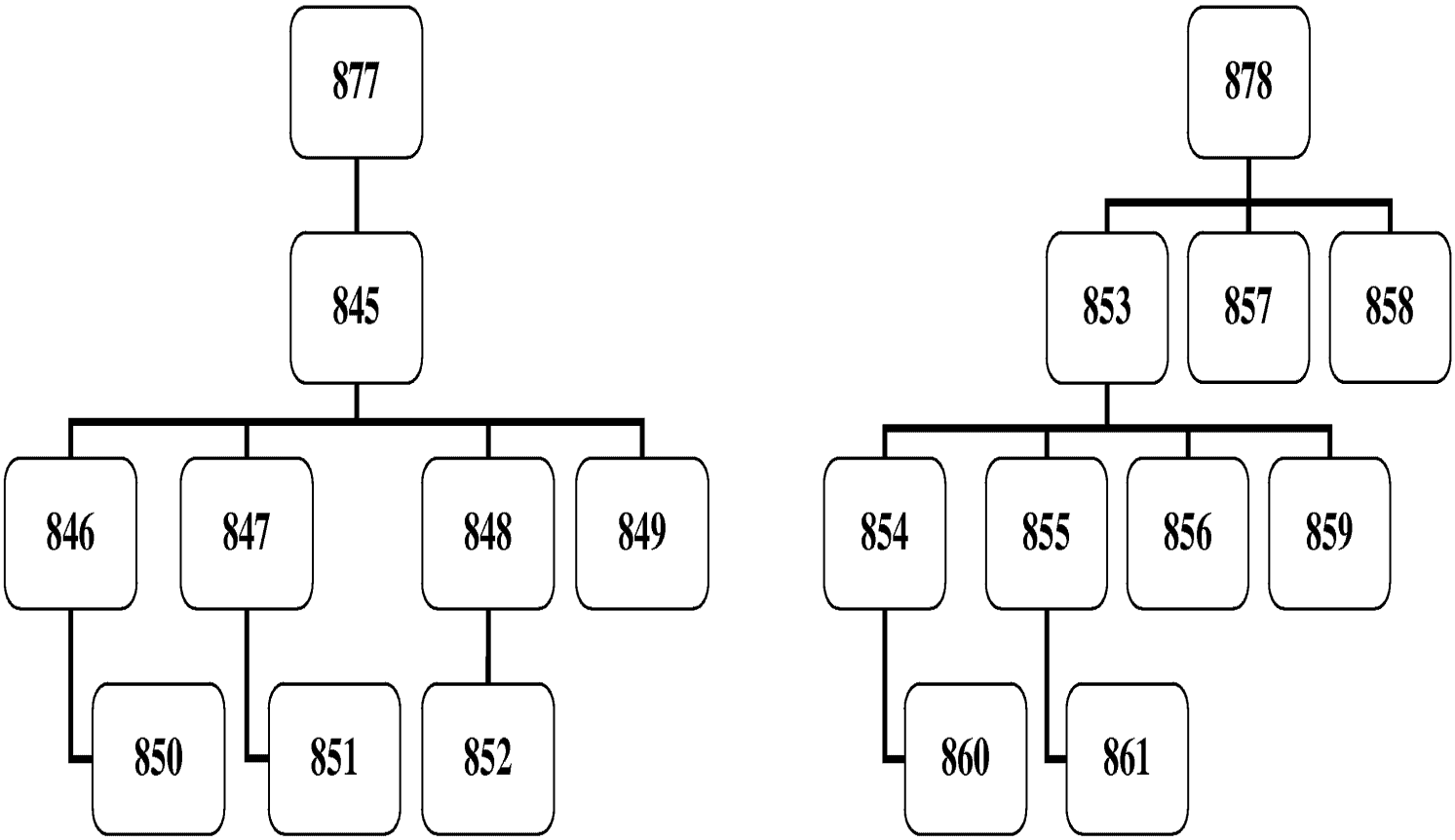

Petitioner Microsoft Corporation, Ex. 1002, p. 3121

Ser. No. 09/399,578

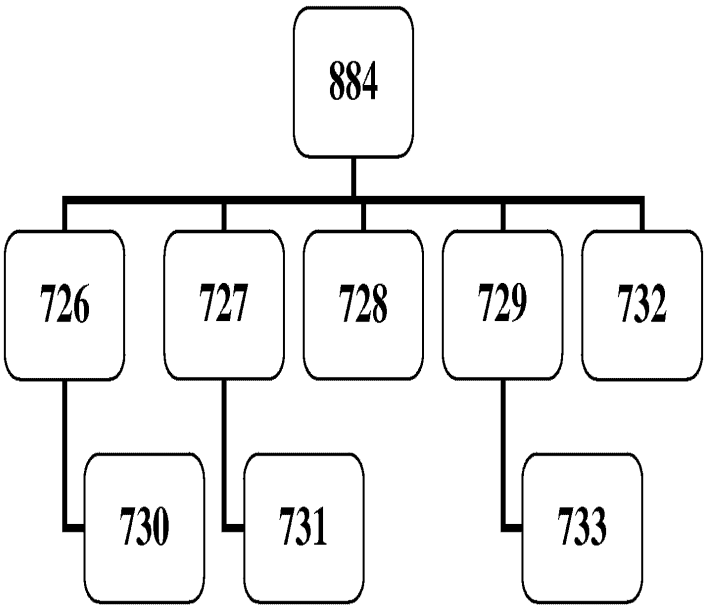

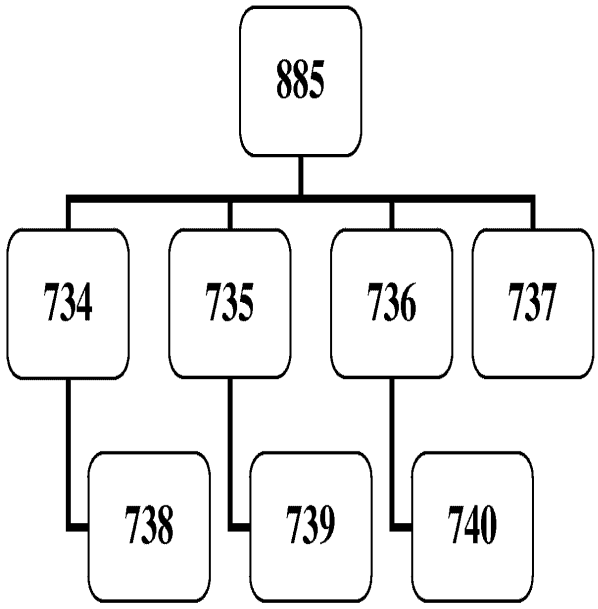

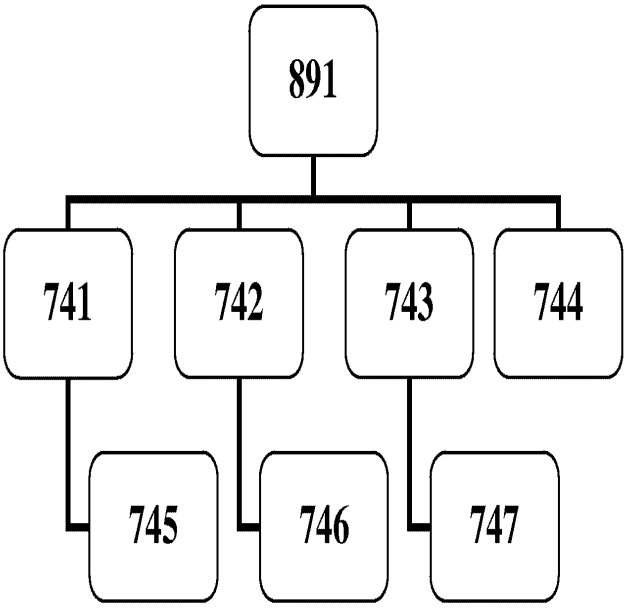

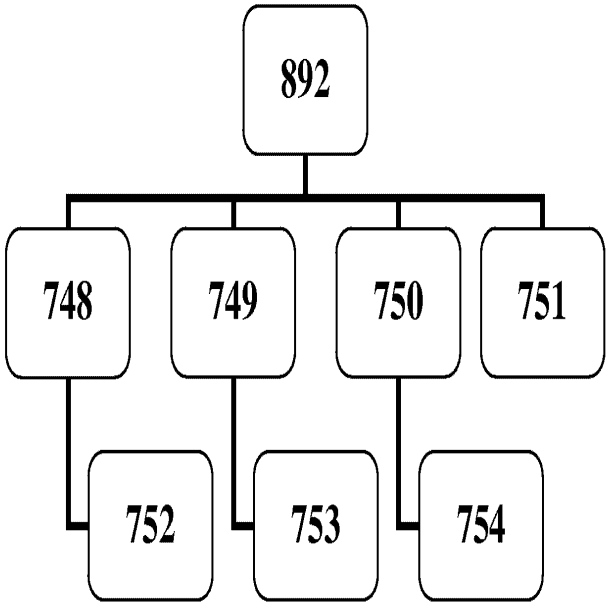

Ser. No. 09/399,578

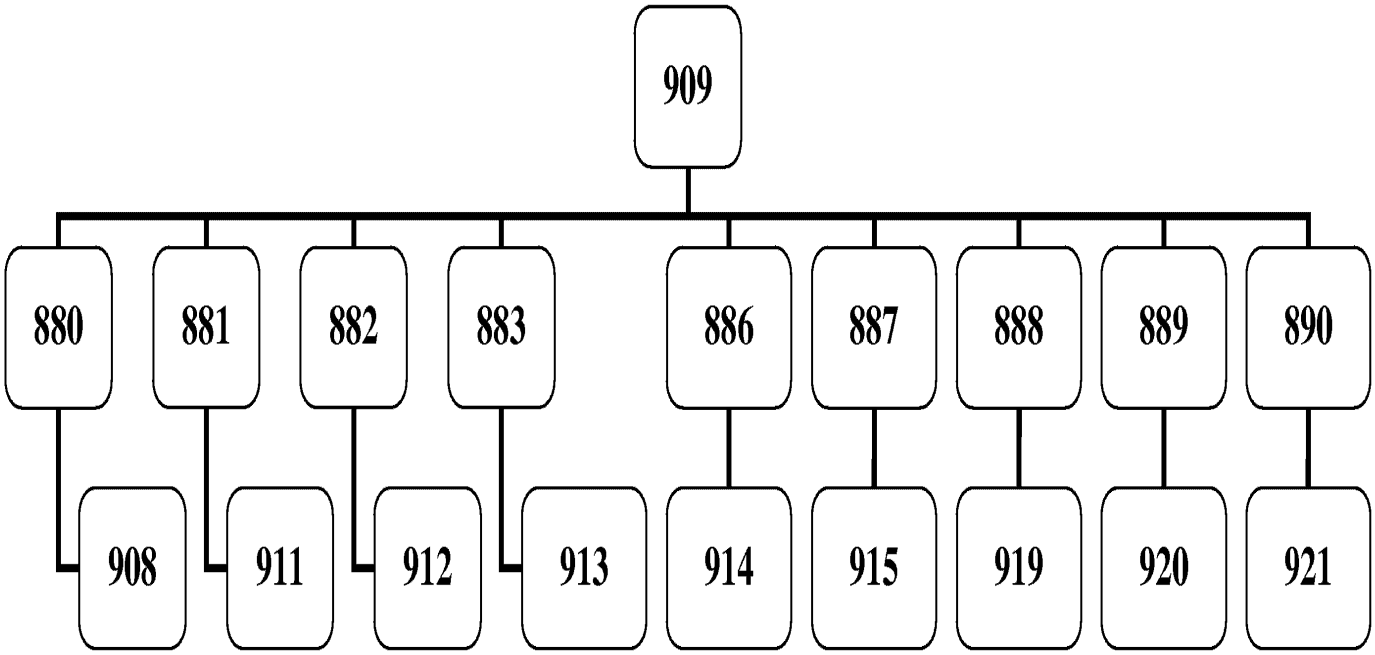

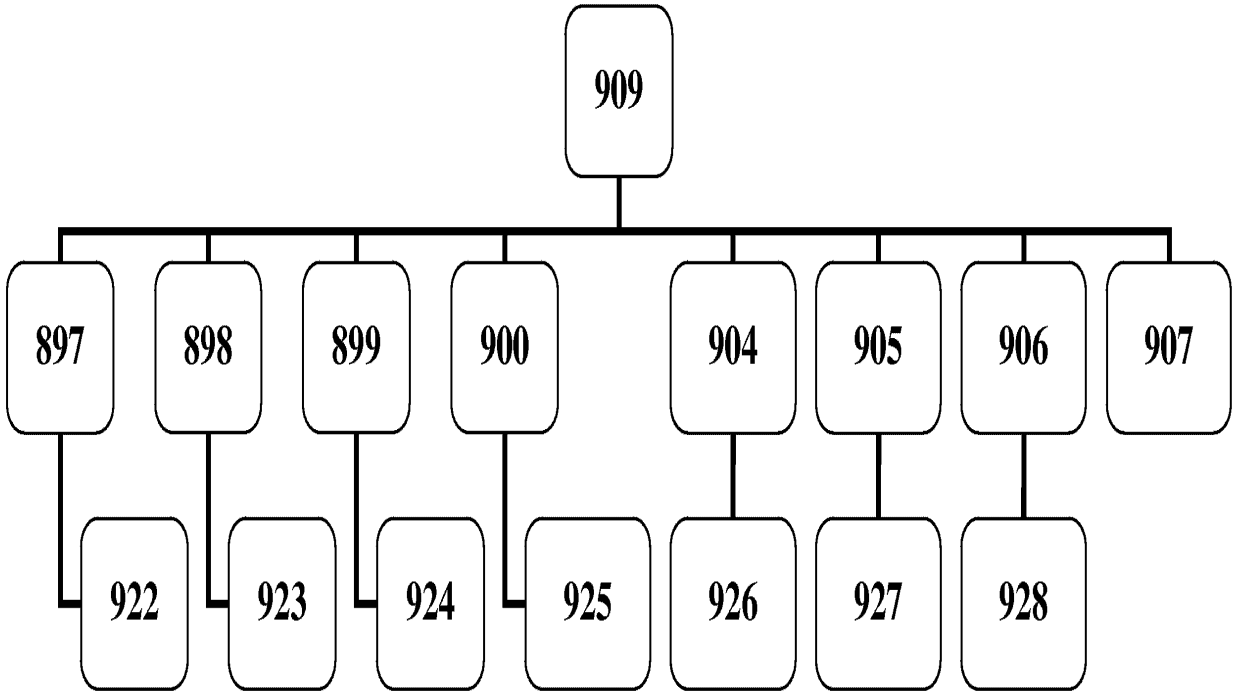

Petitioner Microsoft Corporation, Ex. 1002, p. 3123

Ser. No. 09/399,578

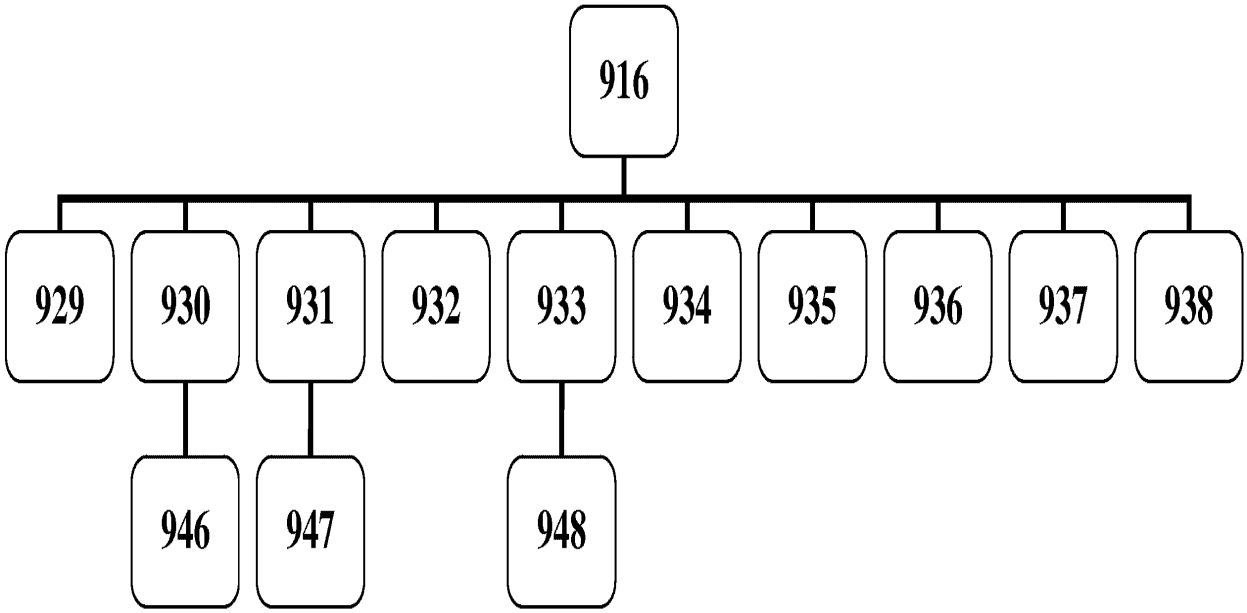

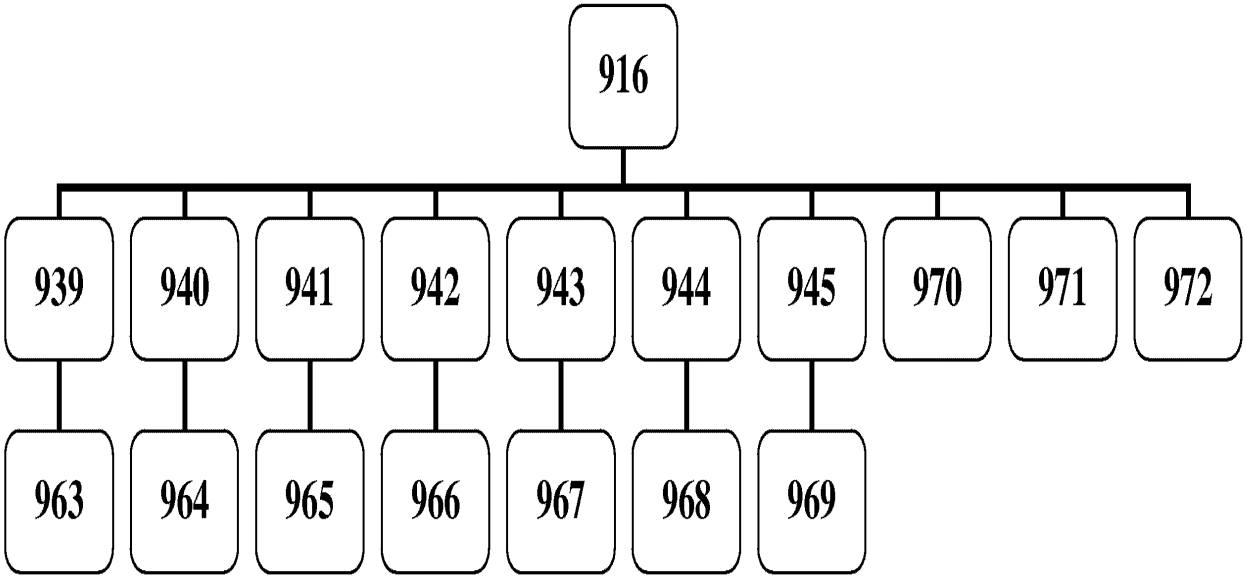

Ser. No. 09/399,578

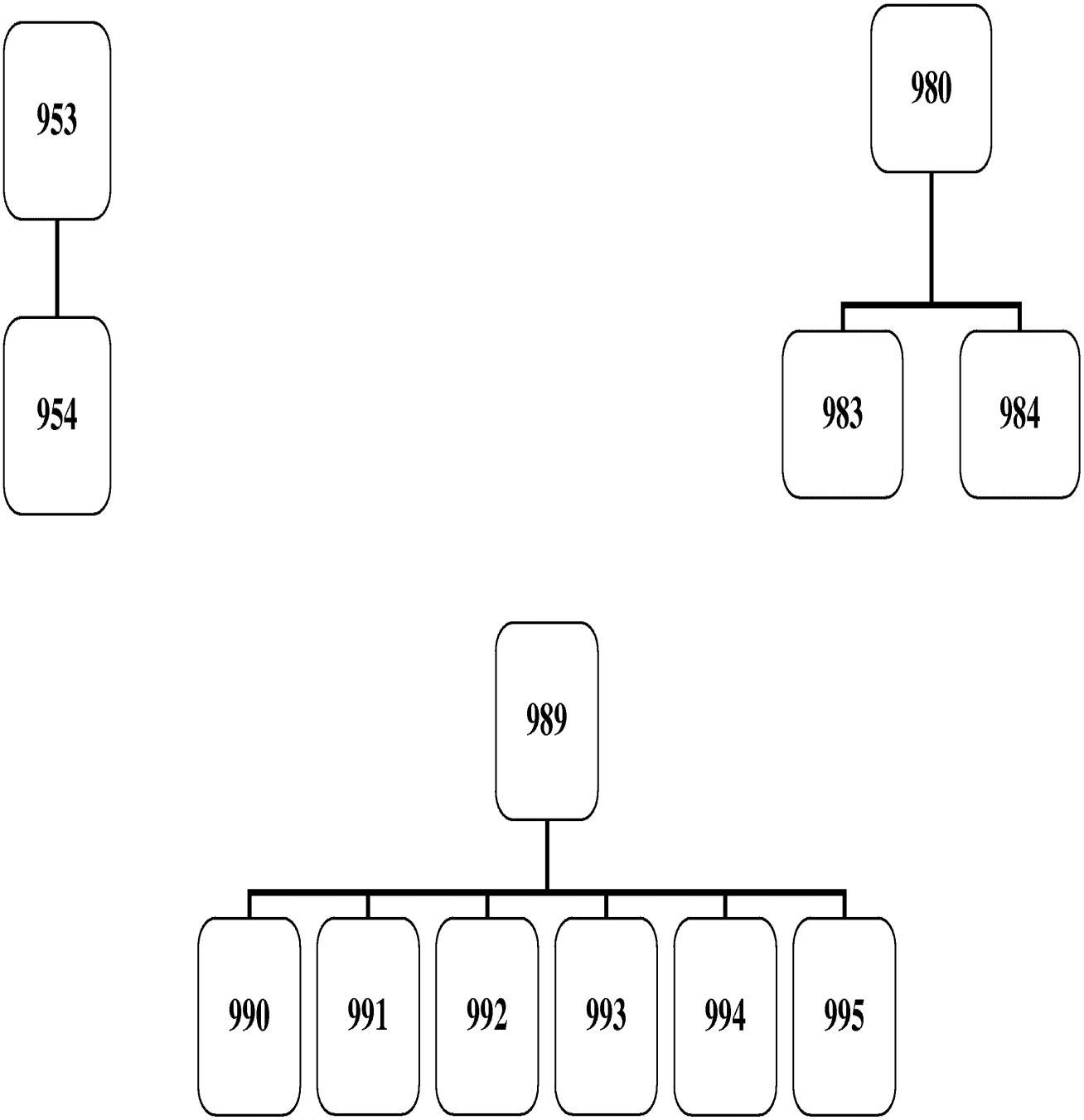

PTO/SB/08A (08-03)
U.S. Patent and Trademark Office: U.S. DEPARTMENT OF COMMERCE
Under the Paperwork Reduction act of 1995, no persons are required to respond to a collection of information unless it contains a valid OMB control number.

Substitute for form 1449A/PTO

INFORMATION DISCLOSURE STATEMENT BY APPLICANT

(use as many sheets as necessary)

Sheet 1 of 2

Complete if Known	
Application Number	09/399,578
Filing Date	09/20/1999
First Named Inventor	
Group Art Unit	2155
Examiner Name	Winder, Patrice L.
Attorney Docket Number	

U.S. PATENT DOCUMENTS

Examiner Initial*	Cite No.[1]	Document Number Number-Kind Code[2] (if known)	Publication Date MM-DD-YYYY	Name of Patentee or Applicant of Cited Document	Pages, Columns, Lines, Where Relevant Passages or Relevant Figures Appear
	A1				

FOREIGN PATENT DOCUMENTS

Examiner Initials*	Cite No.[1]	Foreign Patent Document Country Code[3]-Number[4]-Kind Code[5] (if known)	Publication Date MM-DD-YYYY	Name of Patentee or Applicant of Cited Document	Pages, Columns, Lines, Where Relevant Passages or Relevant Figures Appear	T[6]
	A2					

OTHER ART – NON PATENT LITERATURE DOCUMENTS

Examiner Initials*	Cite No.[1]	Include name of the author (in CAPITAL LETTERS), title of the article (when appropriate), title of the item (book, magazine, journal, serial, symposium, catalog, etc.), date, page(s), volume-issue number(s), publisher, city and/or country where published
	A3	"Internet hasn't focused on good photography as much as it could" Article, The Dallas Morning News, 9/1995 (AOL-B 0001478)
	A4	"Group dynamics add fun to guided on-line tours" Article, USA Today, 10/1995 (AOL-B 0001479)
	A5	"People with addictions band together for support on line", Article, 6/1995(AOL-B 0001480)
	A6	"Netscape Communications Introduces Netscape Internet Applications Family For Electronic Commerce" Netscape Company Press Relations, 3/1995 (AOL-B 0005712-0005713)
	A7	"Netscape Navigator™ Personal Edition" Software (AOL-B 0000446-0000451)
	A8	*Windy City Innovations, LLC v. America Online, Inc.*, Civil Action No. 04 C 4240, "Expert Report of Bruce M. Maggs" dated 8/5/2005
	A9	*Windy City Innovations, LLC v. America Online, Inc.*, Civil Action No. 04 C 4240, "Supplemental Rebuttal Expert of Bruce M. Maggs Regarding Invalidity of U.S. Patent 5,956,491" dated 9/26/2005.
	A10	*Windy City Innovations, LLC v. America Online, Inc.*, Civil Action No. 04 C 4240, Rebuttal Expert Report of Bruce M. Maggs Regarding Invalidity of U.S. Patent 5,956,491" dated 8/26/2005.
	A11	*Windy City Innovations, LLC v. America Online, Inc.*, Civil Action No. 04 C 4240, "AOL's Supplemental Response to Plaintiff Windy City Innovations, LLC's First Set of Interrogatories (No. 4)" dated 4/29/2005
	A12	*Windy City Innovations, LLC v. America Online, Inc.*, Civil Action No. 04 C 4240, "AOL's Second Supplemental Response to Plaintiff Windy City Innovations, LLC's First Set of Interrogatories (No. 4)" dated 5/20/2005

EXAMINER SIGNATURE		DATE CONSIDERED	

*EXAMINER: Initial if reference considered, whether or not citation is in conformance with MPEP 609; Draw line through citation if not in conformance and not considered. Include copy of this form with next communication to applicant. [1]Applicant's unique citation designation number (optional). [2]See Kinds Codes of USPTO Patent Documents at www.uspto.gov or MPEP 901.04. [3]Enter Office that issued the document, by the two-letter code (WIPO Standard ST.3). [4]For Japanese patent documents, the indication of the year of the reign of the Emperor must precede the serial number of the patent document. [5]Kind of document by the appropriate symbols as indicated on the document under WIPO Standard St. 16 if possible. [6]Applicant is to place a check mark here if English language Translation is attached.

This collection of information is required by 37 CFR 1.97 and 1.98. The information is required to obtain or retain a benefit by the public which is to file (and by the USPTO to process) an application. Confidentiality is governed by 35 U.S.C. 122 and 37 CFR 1.14. This collection is estimated to take 2 hours to complete, including gathering, preparing, and submitting the completed application form to the USPTO. Time will vary depending upon the individual case. Any comments on the amount of time you require to complete this form and/or suggestions for reducing this burden, should be sent to the Chief Information Officer, U.S. Patent and Trademark Office, P.O. Box 1450, Alexandria, VA 22313-1450. DO NOT SEND FEES OR COMPLETED FORMS TO THIS ADDRESS. Send TO: Commissioner for Patents, P.O. Box 1450, Alexandria, VA 22313-1450.

If you need assistance in completing the form, call 1-800-PTO-9199 (1-800-786-9199) and select option 2.

PTO/SB/08A (10-01)
Approved for use through 10/31/2002. OMB 0651-0031
U.S. Patent and Trademark Office; U.S. DEPARTMENT OF COMMERCE
Under the Paperwork Reduction act of 1995, no persons are required to respond to a collection of information unless it displays a valid OMB control number.

Substitute for form 1449A/PTO

INFORMATION DISCLOSURE STATEMENT BY APPLICANT

(use as many sheets as necessary)

Sheet 2 Of 2

Complete if Known	
Application Number	09/399,578
Filing Date	09/20/1999
First Named Inventor	
Group Art Unit	2155
Examiner Name	Winder, Patrice L.
Attorney Docket Number	

OTHER ART -- NON PATENT LITERATURE DOCUMENTS		
Examiner Initials*	Cite No.[1]	Include name of the author (in CAPITAL LETTERS), title of the article (when appropriate), title of the item (book, magazine, journal, serial, symposium, catalog, etc.), date, page(s), volume-issue number(s), publisher, city and/or country where published
	A13	*Windy City Innovations, LLC v. America Online, Inc.*, Civil Action No. 04 C 4240, "AOL's Third Supplemental Response to Plaintiff Windy City Innovations, LLC's First Set of Interrogatories (No. 4)" dated 8/11/2005
	A14	*Windy City Innovations, LLC v. America Online, Inc.*, Civil Action No. 04 C 4240, "AOL's Fourth Supplemental Response to Plaintiff Windy City Innovations, LLC's First Set of Interrogatories (No. 4)" dated 9/20/2005
	A15	*Windy City Innovations, LLC v. America Online, Inc.*, Civil Action No. 04 C 4240, "AOL's Fifth Supplemental Response to Plaintiff Windy City Innovations, LLC's First Set of Interrogatories (No. 4)" dated 9/27/2005
	A16	*Windy City Innovations, LLC v. America Online, Inc.*, Civil Action No. 04 C 4240, "Declaration of Mr. David W. Jeske" dated 6/6/2005
	A17	"Netscape adds tools," Responsive Database Services, Inc., Press Release 3/1995 (AOL 1206861 – 1206862)
	A18	"Netscape communications introduces Netscape internet applications family for electronic commerce," PR Newswire Association, Inc., Press Release, 3/1995 (AOL 1206863 – 1206864)
	A19	"Full Scale Commerce With Netscape," Business Communications Co., Press Release, 4/1995 (AOL 1206865 – 1206866)
	A20	"NetScape spins Web extensions: adds firewall, Usenet servers, electronic shopping software NetScape Communications Proxy Server, Isore, Merchant System, Publishing System, Community System," Information Access Company, 4/1995 (AOL 1206867 – 1206868)
	A21	"Netscape offers bookmark, chat services on Web," InfoWorld Media Group, 8/1995 (AOL 1206869)
	A22	"Netscape For Windows 95 Announced," Newsweek Business Information, Inc., 8/1995 (AOL 1206870- 1206873)
	A23	"Netscape introduces Netscape Smartmarks ™ and Netscape Chat ™; Applications Bring New Navigation and Communications Capabilities to Users of Netscape Navigator for Windows," Netscape Chat Help Contents (AOL 613173 – 613243)

EXAMINER	DATE CONSIDERED

EXAMINER: Initial if reference considered, whether or not citation is in conformance with MPEP 609; Draw line through citation if not in conformance and not considered. Include copy of this form with next communication to applicant.

[1] Applicant's unique citation designation number (optional). [2] See Kinds Codes of USPTO Patent Documents at www.uspto.gov or MPEP 901.04. [3] Enter Office that issued the document, by the two-letter code (WIPO Standard ST.3). [4] For Japanese patent documents, the indication of the year of the reign of the Emperor must precede the serial number of the patent document. [5] Kind of document by the appropriate symbols as indicated on the document under WIPO Standard St. 16 if possible. [6] Applicant is to place a check mark here if English language Translation is attached.

PTO/SB/30EFS (06-07)
Approved for use through 09/30/2007. OMB 0651-0031
U.S. Patent and Trademark Office: U.S. DEPARTMENT OF COMMERCE
Under the Paperwork Reduction Act of 1995, no persons are required to respond to a collection of information unless it contains a valid OMB control number.

REQUEST FOR CONTINUED EXAMINATION(RCE)TRANSMITTAL
(Submitted Only via EFS-Web)

Application Number	09/399,578	Filing Date	Sept. 20, 1999	Docket Number (if applicable)	AIS-P1-99	Art Unit	2145
First Named Inventor	MARKS, Daniel L.			Examiner Name	WINDER, Patrice L.		

This is a Request for Continued Examination (RCE) under 37 CFR 1.114 of the above-identified application.
Request for Continued Examination (RCE) practice under 37 CFR 1.114 does not apply to any utility or plant application filed prior to June 8, 1995, or to any design application. The Instruction Sheet for this form is located at WWW.USPTO.GOV

SUBMISSION REQUIRED UNDER 37 CFR 1.114

Note: If the RCE is proper, any previously filed unentered amendments and amendments enclosed with the RCE will be entered in the order in which they were filed unless applicant instructs otherwise. If applicant does not wish to have any previously filed unentered amendment(s) entered, applicant must request non-entry of such amendment(s).

☐ Previously submitted. If a final Office action is outstanding, any amendments filed after the final Office action may be considered as a submission even if this box is not checked

☐ Consider the arguments in the Appeal Brief or Reply Brief previously filed on _____

☐ Other _____

☒ Enclosed

☒ Amendment/Reply

☒ Information Disclosure Statement (IDS)

☐ Affidavit(s)/ Declaration(s)

☒ Other Petition for Extension of Time; Claim Charts

MISCELLANEOUS

☐ Suspension of action on the above-identified application is requested under 37 CFR 1.103(c) for a period of months _____
(Period of suspension shall not exceed 3 months; Fee under 37 CFR 1.17(i) required)

☐ Other _____

FEES

☒ **The RCE fee under 37 CFR 1.17(e) is required by 37 CFR 1.114 when the RCE is filed.**
The Director is hereby authorized to charge any underpayment of fees, or credit any overpayments, to Deposit Account No 50-0235

SIGNATURE OF APPLICANT, ATTORNEY, OR AGENT REQUIRED

☒ Patent Practitioner Signature

☐ Applicant Signature

Under the Paperwork Reduction Act of 1995, no persons are required to respond to a collection of information unless it contains a valid OMB control number.

PTO/SB/80EFS (05-07)
Approved for use through 03/30/2007 OMB 0651-0031
U.S. Patent and Trademark Office: U.S. DEPARTMENT OF COMMERCE

Signature of Registered U.S. Patent Practitioner			
Signature	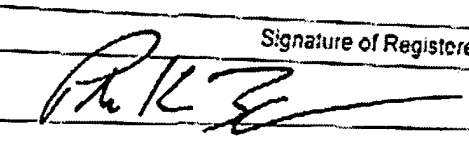	Date (YYYY-MM-DD)	2007-08-15
Name	Peter K. Trzyna, Esq.	Registration Number	32601

This collection of information is required by 37 CFR 1.114. The information is required to obtain or retain a benefit by the public which is to file (and by the USPTO to process) an application. Confidentiality is governed by 35 U.S.C. 122 and 37 CFR 1.11 and 1.14. This collection is estimated to take 12 minutes to complete, including gathering, preparing, and submitting the completed application form to the USPTO. Time will vary depending upon the individual case. Any comments on the amount of time you require to complete this form and/or suggestions for reducing this burden, should be sent to the Chief Information Officer, U.S. Patent and Trademark Office, U.S. Department of Commerce, P.O. Box 1450, Alexandria, VA 22313-1450.

If you need assistance in completing the form, call 1-800-PTO-9199 and select option 2.

OIPE IAP22
AUG 13 2007
PATENT & TRADEMARK OFFICE

8-15-7

AF FH

"Express Mail" mailing label number EQ139521372US
I, Peter K. Trzyna (Reg. No. 32, 601), hereby certify that this paper or fee is being filed by depositing it with the United States Postal Service "Express Mail Post Office to Addressee" service under 37 CFR 1.10 on the date indicated below and is addressed to MS: AF, Commissioner of Patents, P.O. Box 1450, Alexandria, VA 22313-1450 on the date set forth below:

Signed: _____
Peter K. Trzyna (Reg. No. 32,601)

Date: August 13, 2007

PATENT

Paper No.

Our File No. AIS-P99-1

IN THE UNITED STATES PATENT AND TRADEMARK OFFICE

Inventor	:	MARKS, Daniel L.
Serial No.	:	09/399,578
Filed	:	September 20, 1999
For	:	REAL TIME COMMUNICATION SYSTEM
Group Art Unit	:	2145
Examiner	:	WINDER, Patrice L.

MS: No Fee Amendment
Commissioner of Patents
P.O. Box 1450
Alexandria, VA 22313-1450

TRANSMITTAL LETTER

S I R :

Transmitted herewith for filing in the above-identified patent application is the following:

1. Notice of Appeal; and
2. Petition for Extension of Time.

APPLICANT CLAIMS LARGE ENTITY STATUS. The Commissioner is hereby authorized to charge any fees associated with the above-identified patent application or credit any overcharges to Deposit Account No. 50-0235.

Please direct all correspondence to the undersigned at the address given below.

Respectfully submitted,

Date: August 13, 2007

Peter K. Trzyna
(Reg. No. 32,601)

P.O. Box 7131
Chicago, IL 60680-7131
(312) 240-0824

Petitioner Microsoft Corporation, Ex. 1002, p. 3131

OIPE
AUG 13 2007
IAP22
PATENT & TRADEMARK OFFICE

"Express Mail" mailing label number EQ139521372US
I, Peter K. Trzyna (Reg. No. 32, 601), hereby certify that this paper or fee is being filed by depositing it with the United States Postal Service "Express Mail Post Office to Addressee" service under 37 CFR 1.10 on the date indicated below and is addressed to MS: AF, Commissioner of Patents, P.O. Box 1450, Alexandria, VA 22313-1450 on the date set forth below:

Signed: _____
Peter K. Trzyna (Reg. No. 32,601)

Date: August 13, 2007

PATENT

Paper No.

File: AIS-P1-99

IN THE UNITED STATES PATENT AND TRADEMARK OFFICE

Inventor	:	MARKS, Daniel L.
Serial No.	:	09/399,578
Filed	:	20 September 1999
For	:	GROUP COMMUNICATIONS MULTIPLEXING SYSTEM
Group Art Unit	:	2145
Examiner	:	WINDER, Patrice L.

MS: AF
Commissioner of Patents
P.O. Box 1450
Alexandria, VA 22313-1450

PETITION FOR EXTENSION OF TIME

S I R :

This is a Petition for Extension of Time for one month to respond to the Office Action Mailed on June 15, 2007, in the above-referenced patent application. If additional time is necessary, this Petition is to be deemed a Petition for such time as necessary to accept the Notice of Appeal filed herewith.

The Commissioner is hereby authorized to charge any fees associated with the above-identified patent application or credit any overcharges to Deposit Account No. 50-0235.

08/15/2007 HVUONG1 00000110 500235 09399578
01 FC:2251 60.00 DA

Please direct all correspondence to the undersigned at the address given below.

Respectfully submitted,

Date: August 13, 2007

Peter K. Trzyna
(Reg. No. 32,601)

P.O. Box 7131
Chicago, IL 60680-7131

(312) 240-0824

Petitioner Microsoft Corporation, Ex. 1002, p. 3133

OIPE IAP22
AUG 13 2007
PATENT & TRADEMARK OFFICE

"Express Mail" mailing label number EQ139521372US
I, Peter K. Trzyna (Reg. No. 32, 601), hereby certify that this paper or fee is being filed by depositing it with the United States Postal Service "Express Mail Post Office to Addressee" service under 37 CFR 1.10 on the date indicated below and is addressed to MS: AF, Commissioner of Patents, P.O. Box 1450, Alexandria, VA 22313-1450 on the date set forth below:

Signed: _____
Peter K. Trzyna (Reg. No. 32,601)

Date: August 13, 2007

PATENT

Paper No.

File: AIS-P1-99

IN THE UNITED STATES PATENT AND TRADEMARK OFFICE

Inventor	:	MARKS, Daniel L.
Serial No.	:	09/399,578
Filed	:	September 20, 1999
For	:	REAL TIME COMMUNICATION SYSTEM
Group Art Unit	:	2145
Examiner	:	WINDER, Patrice L.

MS: AF
Commissioner of Patents
P.O. Box 1450
Alexandria, VA 22313-1450

NOTICE OF APPEAL

S I R:

Applicant hereby submits this Notice of Appeal to appeal to the Board of Patent Appeals from the decision of the Examiner mailed June 15, 2007, which has claims twice rejected.

Applicant claims LARGE entity status. The Commissioner is hereby authorized to charge any fees associated with the above-identified patent application or credit any overcharges to Deposit Account No. 50-0235.

Please direct all correspondence to the undersigned at the address given below.

Respectfully submitted,

Date: August 13, 2007

Peter K. Trzyna
(Reg. No. 32,601)

P.O. Box 7131
Chicago, Illinois 60680-7131
(312) 240-0824

Petitioner Microsoft Corporation, Ex. 1002, p. 3135

UNITED STATES PATENT AND TRADEMARK OFFICE

UNITED STATES DEPARTMENT OF COMMERCE
United States Patent and Trademark Office
Address: COMMISSIONER FOR PATENTS
P.O. Box 1450
Alexandria, Virginia 22313-1450
www.uspto.gov

APPLICATION NO.	FILING DATE	FIRST NAMED INVENTOR	ATTORNEY DOCKET NO.	CONFIRMATION NO.
09/399,578	09/20/1999	DANIEL L. MARKS	AIS-P99-1	2427

7590 06/15/2007

PETER K TRZYNA
P.O.BOX 7131
CHICAGO, IL 606807131

EXAMINER	
WINDER, PATRICE L	

ART UNIT	PAPER NUMBER
2145	

MAIL DATE	DELIVERY MODE
06/15/2007	PAPER

Please find below and/or attached an Office communication concerning this application or proceeding.

The time period for reply, if any, is set in the attached communication.

Office Action Summary	Application No.	Applicant(s)	
	09/399,578	MARKS, DANIEL L.	
	Examiner	Art Unit	
	Patrice Winder	2145	

-- The MAILING DATE of this communication appears on the cover sheet with the correspondence address --

Period for Reply

A SHORTENED STATUTORY PERIOD FOR REPLY IS SET TO EXPIRE 1 MONTH(S) OR THIRTY (30) DAYS, WHICHEVER IS LONGER, FROM THE MAILING DATE OF THIS COMMUNICATION.

- Extensions of time may be available under the provisions of 37 CFR 1.136(a). In no event, however, may a reply be timely filed after SIX (6) MONTHS from the mailing date of this communication.
- If NO period for reply is specified above, the maximum statutory period will apply and will expire SIX (6) MONTHS from the mailing date of this communication.
- Failure to reply within the set or extended period for reply will, by statute, cause the application to become ABANDONED (35 U.S.C. § 133). Any reply received by the Office later than three months after the mailing date of this communication, even if timely filed, may reduce any earned patent term adjustment. See 37 CFR 1.704(b).

Status

1)☒ Responsive to communication(s) filed on *27 February 2007*.

2a)☐ This action is **FINAL**. 2b)☐ This action is non-final.

3)☐ Since this application is in condition for allowance except for formal matters, prosecution as to the merits is closed in accordance with the practice under *Ex parte Quayle*, 1935 C.D. 11, 453 O.G. 213.

Disposition of Claims

4)☒ Claim(s) *1-995* is/are pending in the application.

4a) Of the above claim(s) *1-995* is/are withdrawn from consideration.

5)☐ Claim(s) _____ is/are allowed.

6)☐ Claim(s) _____ is/are rejected.

7)☐ Claim(s) _____ is/are objected to.

8)☒ Claim(s) *1-995* are subject to restriction and/or election requirement.

Application Papers

9)☐ The specification is objected to by the Examiner.

10)☐ The drawing(s) filed on _____ is/are: a)☐ accepted or b)☐ objected to by the Examiner.

Applicant may not request that any objection to the drawing(s) be held in abeyance. See 37 CFR 1.85(a).

Replacement drawing sheet(s) including the correction is required if the drawing(s) is objected to. See 37 CFR 1.121(d).

11)☐ The oath or declaration is objected to by the Examiner. Note the attached Office Action or form PTO-152.

Priority under 35 U.S.C. § 119

12)☐ Acknowledgment is made of a claim for foreign priority under 35 U.S.C. § 119(a)-(d) or (f).

a)☐ All b)☐ Some * c)☐ None of:

1.☐ Certified copies of the priority documents have been received.

2.☐ Certified copies of the priority documents have been received in Application No. _____.

3.☐ Copies of the certified copies of the priority documents have been received in this National Stage application from the International Bureau (PCT Rule 17.2(a)).

* See the attached detailed Office action for a list of the certified copies not received.

Attachment(s)

1) ☐ Notice of References Cited (PTO-892)
2) ☐ Notice of Draftsperson's Patent Drawing Review (PTO-948)
3) ☐ Information Disclosure Statement(s) (PTO/SB/08) Paper No(s)/Mail Date _____.
4) ☐ Interview Summary (PTO-413) Paper No(s)/Mail Date. _____.
5) ☐ Notice of Informal Patent Application
6) ☐ Other: _____.

Election/Restrictions

1. Newly submitted claims of group 1 are directed to an invention that is independent or distinct from the invention originally claimed for the following reasons: the censoring feature of the claims of group 1 are not within the scope of the originally filed claims

Since applicant has received an action on the merits for the originally presented invention, this invention has been constructively elected by original presentation for prosecution on the merits. Accordingly, claims of group 1 are withdrawn from consideration as being directed to a non-elected invention. See 37 CFR 1.142(b) and MPEP § 821.03.

2. Applicant's election with traverse of group 1 in the reply filed on February 27, 2007 is acknowledged. The traversal is on the ground(s) that the inventions are not independent or distinct. This is not found persuasive because applicant ignores the rationale behind the restriction requirement. Specifically, Applicant ignores what the distinguishing features that resulted in the restriction requirement. Applicant does not argue they are not different, which is significant, and the Examiner will assume it is because Applicant also knows that the features are distinguishing. Also, the applicant ignores that the groups of claims have been separately classified. Applicant also ignores that the classification are distinct as well, i.e. 709 and 715. By being separately classified the search for each group of claims is tailored distinctly without the considerations of the features of the other claims.

The requirement is still deemed proper and is therefore made FINAL.

3. The claims of group 2 are closer to the originally presented claims. To pursue examination. Applicant should reconsider the election of group 1.

4. Please provide a claim tree of the associated claims in reply to this office action. This information would help the Examiner determine the present status of the claims. The Examiner thanks Applicant in advance for the effort.

5. Since the above-mentioned reply appears to be *bona fide*, applicant is given **ONE (1) MONTH or THIRTY (30) DAYS** from the mailing date of this notice, whichever is longer, within which to supply the omission or correction in order to avoid abandonment. EXTENSIONS OF THIS TIME PERIOD MAY BE GRANTED UNDER 37 CFR 1.136(a).

6. Any inquiry concerning this communication or earlier communications from the examiner should be directed to Patrice Winder whose telephone number is 571-272-3935. The examiner can normally be reached on Monday-Friday, 10:30 am-7:00 pm.

If attempts to reach the examiner by telephone are unsuccessful, the examiner's supervisor, Jason Cardone can be reached on 571-272-3933. The fax phone number for the organization where this application or proceeding is assigned is 571-273-8300.

Information regarding the status of an application may be obtained from the Patent Application Information Retrieval (PAIR) system. Status information for published applications may be obtained from either Private PAIR or Public PAIR. Status information for unpublished applications is available through Private PAIR only. For more information about the PAIR system, see http://pair-direct.uspto.gov. Should you have questions on access to the Private PAIR system, contact the Electronic Business Center (EBC) at 866-217-9197 (toll-free). If you would like assistance from a USPTO Customer Service Representative or access to the automated information system, call 800-786-9199 (IN USA OR CANADA) or 571-272-1000.

Patrice L. Winder

Patrice Winder
Primary Examiner
Art Unit 2145

June 11, 2007

RECEIVED
CENTRAL FAX CENTER

FEB 2 7 2007

Regular Correspondence:
195 North Harbor Drive, Suite 5403, Chicago Illinois 60601-7540

Docketed Correspondence:
Post Office Box 7131, Chicago Illinois 60680-7131

Peter K. Trzyna, Esq.

Telephone: (312) 240-0824 Facsimile: (312) 240-0825

E-mail: pktlaw@email.msn.com

Fax

To: Examiner Patrice Winder	**Re:** 09/399,578 Response
Firm: United States Patent and Trademark Office	**Date / Time:** February 27, 2007
Street Address:	**Phone:** (571) 272-3935
City, State Zip: Washington, D.C., 20231	**Fax:** (571) 273-8300
cc:	**No. of Pages:** 6 (including cover)

PRIVACY AND CONFIDENTIALITY NOTICE

The information contained in this communication is confidential and may be legally privileged. It is intended solely for the use of the individual or entity to whom it is addressed and other authorized to receive it. If you are not the intended recipient, you are hereby notified that any disclosure, copying, distribution or taking of any action in reliance on the contents of this information is strictly prohibited. If you received this communication in error, please immediately notify us by a collect telephone call to the writer at the writer's direct number indicated above, and return the original message and documents to the sender at the above address via the United States postal service.

Message:

RECEIVED
CENTRAL FAX CENTER
FEB 27 2007

I hereby certify that this correspondence is being filed by facsimile and addressed to MS: No Fee Amendment, Commissioner of Patents, P.O. Box 1450, Alexandria, VA 22313-1450 on the date indicated below.

Date: February 27, 2007

Signed: _____

Peter K. Trzyna (Reg. No. 32,601)

PATENT

Paper No.

Our File No. AIS-P99-1

IN THE UNITED STATES PATENT AND TRADEMARK OFFICE

Inventor	:	MARKS, Daniel L.
Serial No.	:	09/399,578
Filed	:	September 20, 1999
For	:	REAL TIME COMMUNICATION SYSTEM
Group Art Unit	:	2145
Examiner	:	WINDER, Patrice L.

MS: No Fee Amendment
Commissioner of Patents
P.O. Box 1450
Alexandria, VA 22313-1450

TRANSMITTAL LETTER

S I R :

Transmitted herewith for filing in the above-identified patent application is the following:

1. Response to Restriction Requirement.

APPLICANT CLAIMS LARGE ENTITY STATUS. The Commissioner is hereby authorized to charge any fees associated with the above-identified patent application or credit any overcharges to Deposit Account No. 50-0235.

Ser. No. 09/399,578
Atty. Ref. AIS-P1-99
Art Unit 2145

Please direct all correspondence to the undersigned at the address given below.

Respectfully submitted,

Date: February 27, 2007

Peter K. Trzyna
(Reg. No. 32,601)

P.O. Box 7131
Chicago, IL 60680-7131
(312) 240-0824

PAGE 3/6 * RCVD AT 2/27/2007 3:42:41 PM [Eastern Standard Time] * SVR:USPTO-EFXRF-1/19 * DNIS:2738300 * CSID:13122400825 * DURATION (mm-ss):01-34

RECEIVED
CENTRAL FAX CENTER

FEB 2 7 2007

I hereby certify that this correspondence is being filed by facsimile and addressed to MS: No Fee Amendment, Commissioner of Patents, P.O. Box 1450, Alexandria, VA 22313-1450 on the date indicated below.

Date: February 27, 2007

Signed: _____
Peter K. Trzyna (Reg. No. [illegible])

PATENT

Paper No.

Our File No. AIS-P99-1

IN THE UNITED STATES PATENT AND TRADEMARK OFFICE

Inventor	:	MARKS, Daniel L.
Serial No.	:	09/399,578
Filed	:	September 20, 1999
For	:	REAL TIME COMMUNICATION SYSTEM
Group Art Unit	:	2145
Examiner	:	WINDER, Patrice L.

MS: No Fee Amendment
Commissioner of Patents
P.O. Box 1450
Alexandria, VA 22313-1450

RESPONSE TO RESTRICTION REQUIREMENT

S I R :

Please enter the following Response in response to the Office Action mailed February 6, 2007, and reconsider the application in view of the amendment and the remarks set forth below. It is believed that no new matter has been added.

RECEIVED
CENTRAL FAX CENTER
FEB 2 7 2007

Ser. No. 09/399,578
Atty. Ref. AIS-P1-99
Art Unit 2145

I. REMARKS

In response to the Restriction Requirement, Applicant provisionally elects Group I with traverse, and respectfully requests reconsideration.

First, it is respectfully submitted that a proper showing has not been made that these are related as combination / sub-combination. Claim 435 is the apparatus analog to its method claim 1, and claim 435 must be searched in order to carry out the examination of claim 1. Normally apparatus and method claims are not restricted as separate and distinct.

Second, graphic and user identities mentioned in the Office Action as distinguishing Group II are in claim 1 of Group I. Further, dependent claims of Group I pertain to an image as in Group II. Thus, the claims of Group II must be searched when examining Group I.

The PTO has not shown, pursuant to MPEP Sec. 802, that claims are independent and distinct and have separate utility. More so, even if they are separate and distinct, there is "a serious burden on the Examiner if restriction is required (see MPEP Section 803.02, Section 806.04(a) - Section 806.04(i), Section 808.01(a), and Section 808.02)." And pursuant to GUIDELINES found there, "examiners must provide reasons and/or examples to support conclusions." The Examiner has not provided sufficient "reasons and/or examples to support conclusions" as required by the MPEP.

In sum, the Examiner has not established that these Groups are separate and distinct and has not established that a search of one would not require a search of the other.

APPLICANT CLAIMS LARGE ENTITY STATUS. The Commissioner is hereby authorized to charge any fees associated with the above-identified patent application or credit any overcharges to Deposit Account No. 50-0235, and if any extension of time is needed, this shall be deemed a petition therefore.

PAGE 5/6 * RCVD AT 2/27/2007 3:42:41 PM [Eastern Standard Time] * SVR:USPTO-EFXRF-1/19 * DNIS:2738300 * CSID:13122400825 * DURATION (mm-ss):01-34

Petitioner Microsoft Corporation, Ex. 1002, p. 3145

Ser. No. 09/399,578
Atty. Ref. AIS-P1-99
Art Unit 2145

Please direct all communication to the undersigned at the address given below.

Respectfully submitted,

Date: February 27, 2007

Peter K. Trzyna
(Reg. No. 32,601)

P. O. Box 7131
Chicago, Illinois 60680-7131
(312) 240-0824

PAGE 6/6 * RCVD AT 2/27/2007 3:42:41 PM [Eastern Standard Time] * SVR:USPTO-EFXRF-1/19 * DNIS:2738300 * CSID:13122400825 * DURATION (mm-ss):01-34

Petitioner Microsoft Corporation, Ex. 1002, p. 3146

UNITED STATES PATENT AND TRADEMARK OFFICE

UNITED STATES DEPARTMENT OF COMMERCE
United States Patent and Trademark Office
Address: COMMISSIONER FOR PATENTS
P.O. Box 1450
Alexandria, Virginia 22313-1450
www.uspto.gov

APPLICATION NO.	FILING DATE	FIRST NAMED INVENTOR	ATTORNEY DOCKET NO.	CONFIRMATION NO.
09/399,578	09/20/1999	DANIEL L. MARKS	AIS-P99-1	2427

7590 02/06/2007

PETER K TRZYNA
P.O.BOX 7131
CHICAGO, IL 606807131

EXAMINER	
WINDER, PATRICE L	
ART UNIT	**PAPER NUMBER**
2145	

SHORTENED STATUTORY PERIOD OF RESPONSE	MAIL DATE	DELIVERY MODE
31 DAYS	02/06/2007	PAPER

Please find below and/or attached an Office communication concerning this application or proceeding.

If NO period for reply is specified above, the maximum statutory period will apply and will expire 6 MONTHS from the mailing date of this communication.

Office Action Summary	Application No.	Applicant(s)	
	09/399,578	MARKS, DANIEL L.	
	Examiner	Art Unit	
	Patrice Winder	2145	

-- The MAILING DATE of this communication appears on the cover sheet with the correspondence address --

Period for Reply

A SHORTENED STATUTORY PERIOD FOR REPLY IS SET TO EXPIRE 1 MONTH(S) OR THIRTY (30) DAYS, WHICHEVER IS LONGER, FROM THE MAILING DATE OF THIS COMMUNICATION.

- Extensions of time may be available under the provisions of 37 CFR 1.136(a). In no event, however, may a reply be timely filed after SIX (6) MONTHS from the mailing date of this communication.
- If NO period for reply is specified above, the maximum statutory period will apply and will expire SIX (6) MONTHS from the mailing date of this communication.
- Failure to reply within the set or extended period for reply will, by statute, cause the application to become ABANDONED (35 U.S.C. § 133). Any reply received by the Office later than three months after the mailing date of this communication, even if timely filed, may reduce any earned patent term adjustment. See 37 CFR 1.704(b).

Status

1)☒ Responsive to communication(s) filed on *17 November 2006*.

2a)☐ This action is **FINAL**. 2b)☐ This action is non-final.

3)☐ Since this application is in condition for allowance except for formal matters, prosecution as to the merits is closed in accordance with the practice under *Ex parte Quayle*, 1935 C.D. 11, 453 O.G. 213.

Disposition of Claims

4)☒ Claim(s) *1-995* is/are pending in the application.

4a) Of the above claim(s) _____ is/are withdrawn from consideration.

5)☐ Claim(s) _____ is/are allowed.

6)☐ Claim(s) _____ is/are rejected.

7)☐ Claim(s) _____ is/are objected to.

8)☒ Claim(s) *1-995* are subject to restriction and/or election requirement.

Application Papers

9)☐ The specification is objected to by the Examiner.

10)☐ The drawing(s) filed on _____ is/are: a)☐ accepted or b)☐ objected to by the Examiner.

Applicant may not request that any objection to the drawing(s) be held in abeyance. See 37 CFR 1.85(a).

Replacement drawing sheet(s) including the correction is required if the drawing(s) is objected to. See 37 CFR 1.121(d).

11)☐ The oath or declaration is objected to by the Examiner. Note the attached Office Action or form PTO-152.

Priority under 35 U.S.C. § 119

12)☐ Acknowledgment is made of a claim for foreign priority under 35 U.S.C. § 119(a)-(d) or (f).

a)☐ All b)☐ Some * c)☐ None of:

1.☐ Certified copies of the priority documents have been received.

2.☐ Certified copies of the priority documents have been received in Application No. _____.

3.☐ Copies of the certified copies of the priority documents have been received in this National Stage application from the International Bureau (PCT Rule 17.2(a)).

* See the attached detailed Office action for a list of the certified copies not received.

Attachment(s)

1) ☐ Notice of References Cited (PTO-892)
2) ☐ Notice of Draftsperson's Patent Drawing Review (PTO-948)
3) ☒ Information Disclosure Statement(s) (PTO/SB/08) Paper No(s)/Mail Date *9-8-05; 10-24-05*.
4) ☐ Interview Summary (PTO-413) Paper No(s)/Mail Date. _____.
5) ☐ Notice of Informal Patent Application
6) ☐ Other: _____.

Election/Restriction

1. Restriction to one of the following inventions is required under 35 U.S.C. 121:

I. Claims 1-995 (excluding the claims in invention II), drawn to conferencing between multiple participant computers including censoring communications, classified in class 709, subclass 206.

II. Claims 409, 435, 843, 917 (and associated dependent claims) drawn to associating graphical images with user identities, classified in class 715, subclass 758.

The inventions are distinct, each from the other because of the following reasons:

2. Inventions I and II are related as combination and subcombination. Inventions in this relationship are distinct if it can be shown that (1) the combination as claimed does not require the particulars of the subcombination as claimed for patentability, and (2) that the subcombination has utility by itself or in other combinations (MPEP § 806.05(c)). In the instant case, the combination as claimed does not require the particulars of the subcombination as claimed because the details of an associated user interface or conference window representation are not within the scope of the invention. The subcombination has separate utility such as a technique for associating graphical images with user identities in a network.

The examiner has required restriction between combination and subcombination inventions. Where applicant elects a subcombination, and claims thereto are subsequently found allowable, any claim(s) depending from or otherwise requiring all the limitations of the allowable subcombination will be examined for patentability in

accordance with 37 CFR 1.104. See MPEP § 821.04(a). Applicant is advised that if any claim presented in a continuation or divisional application is anticipated by, or includes all the limitations of, a claim that is allowable in the present application, such claim may be subject to provisional statutory and/or nonstatutory double patenting rejections over the claims of the instant application.

3. Because these inventions are independent or distinct for the reasons given above and there would be a serious burden on the examiner if restriction is not required because the inventions have acquired a separate status in the art in view of their different classification, restriction for examination purposes as indicated is proper.

4. Because these inventions are independent or distinct for the reasons given above and there would be a serious burden on the examiner if restriction is not required because the inventions require a different field of search (see MPEP § 808.02), restriction for examination purposes as indicated is proper.

5. Applicant is advised that the reply to this requirement to be complete must include (i) an election of a species or invention to be examined even though the requirement be traversed (37 CFR 1.143) and (ii) identification of the claims encompassing the elected invention.

The election of an invention or species may be made with or without traverse. To reserve a right to petition, the election must be made with traverse. If the reply does not distinctly and specifically point out supposed errors in the restriction requirement, the election shall be treated as an election without traverse.

Should applicant traverse on the ground that the inventions or species are not patentably distinct, applicant should submit evidence or identify such evidence now of record showing the inventions or species to be obvious variants or clearly admit on the record that this is the case. In either instance, if the examiner finds one of the inventions unpatentable over the prior art, the evidence or admission may be used in a rejection under 35 U.S.C.103(a) of the other invention.

Information Disclosure Statement

6. The information disclosure statement filed September 8, 2005 fails to comply with 37 CFR 1.97(c) because it lacks a statement as specified in 37 CFR 1.97(e). It has been placed in the application file, but the information referred to therein has not been considered.

7. The information disclosure statement filed October 24, 2005 fails to comply with 37 CFR 1.97(c) because it lacks a statement as specified in 37 CFR 1.97(e). It has been placed in the application file, but the information referred to therein has not been considered.

8. Any inquiry concerning this communication or earlier communications from the examiner should be directed to Patrice Winder whose telephone number is 571-272-3935. The examiner can normally be reached on Monday-Friday, 10:30 am-7:00 pm.

If attempts to reach the examiner by telephone are unsuccessful, the examiner's supervisor, Jason Cardone can be reached on 571-272-3933. The fax phone number for the organization where this application or proceeding is assigned is 571-273-8300.

Information regarding the status of an application may be obtained from the Patent Application Information Retrieval (PAIR) system. Status information for published applications may be obtained from either Private PAIR or Public PAIR. Status information for unpublished applications is available through Private PAIR only. For more information about the PAIR system, see http://pair-direct.uspto.gov. Should you have questions on access to the Private PAIR system, contact the Electronic Business Center (EBC) at 866-217-9197 (toll-free).

If you would like assistance from a USPTO Customer Service Representative or access to the automated information system, call 800-786-9199 (IN USA OR CANADA) or 571-272-1000.

Patrice L. Winder

Patrice Winder
Primary Examiner
Art Unit 2145

February 5, 2007

OIPE IAP2 OCT 24 2005 PATENT & TRADEMARK OFFICE

PTO/SB/08A (08-03)
U.S. Patent and Trademark Office: U.S. DEPARTMENT OF COMMERCE
(Under the Paperwork Reduction act of 1995, no persons are required to respond to a collection of information unless it contains a valid OMB control number.

Substitute for form 1449A/PTO

INFORMATION DISCLOSURE STATEMENT BY APPLICANT

(use as many sheets as necessary)

Sheet 1 of 2

Complete if Known	
Application Number	09/399,578
Filing Date	09/20/1999
First Named Inventor	
Group Art Unit	2155
Examiner Name	Winder, Patrice L.
Attorney Docket Number	

U.S. PATENT DOCUMENTS

Examiner Initial*	Cite No.[1]	Document Number Number-Kind Code [2] (if known)	Publication Date MM-DD-YYYY	Name of Patentee or Applicant of Cited Document	Pages, Columns, Lines, Where Relevant Passages or Relevant Figures Appear
	A1				

FOREIGN PATENT DOCUMENTS

Examiner Initials*	Cite No.[1]	Foreign Patent Document Country Code[3]-Number[4]-Kind Code[5] (if known)	Publication Date MM-DD-YYYY	Name of Patentee or Applicant of Cited Document	Pages, Columns, Lines, Where Relevant Passages or Relevant Figures Appear	T[6]
	A2					

OTHER ART -- NON-PATENT LITERATURE DOCUMENTS

Examiner Initials*	Cite No.[1]	Include name of the author (in CAPITAL LETTERS), title of the article (when appropriate), title of the item (book, magazine, journal, serial, symposium, catalog, etc.), date, page(s), volume-issue number(s), publisher, city and/or country where published
	A3	"Internet hasn't focused on good photography as much as it could" Article, The Dallas Morning News, 9/1995 (AOL-B 0001478)
	A4	"Group dynamics add fun to guided online tours" Article, USA Today, 10/1995 (AOL-B 0001479)
	A5	"People with addictions band together for support on line", Article, 6/1995(AOL-B 0001480)
	A6	"Netscape Communications Introduces Netscape Internet Applications Family For Electronic Commerce" Netscape Company Press Relations, 3/1995 (AOL-B 0005712-0005713)
	A7	"Netscape Navigator™ Personal Edition" Software (AOL-B 0000446-0000451)
	A8	*Windy City Innovations, LLC v. America Online, Inc.*, Civil Action No. 04 C 4240, "Expert Report of Bruce M. Maggs" dated 8/5/2005
	A9	*Windy City Innovations, LLC v. America Online, Inc.*, Civil Action No. 04 C 4240, "Supplemental Rebuttal Expert of Bruce M. Maggs Regarding Invalidity of U.S. Patent 5,956,491" dated 9/26/2005.
	A10	*Windy City Innovations, LLC v. America Online, Inc.*, Civil Action No. 04 C 4240, Rebuttal Expert Report of Bruce M. Maggs Regarding Invalidity of U.S. Patent 5,956,491" dated 8/28/2005.
	A11	*Windy City Innovations, LLC v. America Online, Inc.*, Civil Action No. 04 C 4240, "AOL's Supplemental Response to Plaintiff Windy City Innovations, LLC's First Set of Interrogatories (No. 4)" dated 4/29/2005
	A12	*Windy City Innovations, LLC v. America Online, Inc.*, Civil Action No. 04 C 4240, "AOL's Second Supplemental Response to Plaintiff Windy City Innovations, LLC's First Set of Interrogatories (No. 4)" dated 5/20/2005

EXAMINER SIGNATURE		DATE CONSIDERED	

*EXAMINER: Initial if reference considered, whether or not citation is in conformance with MPEP 609; Draw line through citation if not in conformance and not considered. Include copy of this form with next communication to applicant. [1]Applicant's unique citation designation number (optional). [2]See Kinds Codes of USPTO Patent Documents at www.uspto.gov or MPEP 901.04. [3] Enter Office that issued the document, by the two-letter code (WIPO Standard ST.3). [4]For Japanese patent documents, the indication of the year of the reign of the Emperor must precede the serial number of the patent document. [5]Kind of document by the appropriate symbols as indicated on the document under WIPO Standard St. 16 if possible. [6]Applicant is to place a check mark here if English language Translation is attached.

This collection of information is required by 37 CFR 1.97 and 1.98. The information is required to obtain or retain a benefit by the public which is to file (and by the USPTO to process) an application. Confidentiality is governed by 35 U.S.C. 122 and 37 CFR 1.14. This collection is estimated to take 2 hours to complete, including gathering, preparing, and submitting the completed application form to the USPTO. Time will vary depending upon the individual case. Any comments on the amount of time you require to complete this form and/or suggestions for reducing this burden, should be sent to the Chief Information Officer, U.S. Patent and Trademark Office, P.O. Box 1450 Alexandria, VA 22313-1450. DO NOT SEND FEES OR COMPLETED FORMS TO THIS ADDRESS. **Send TO: Commissioner for Patents, P.O. Box 1450, Alexandria, VA 22313-1450.**

If you need assistance in completing the form, call 1-800-PTO-9199 (1800-786-9199) and select option 2.

OIPE IAP2 OCT 24 2005 PATENT & TRADEMARK OFFICE

PTO/SB/08A (10-01)
Approved for use through 10/31/2002. OMB 0651-0031
U.S. Patent and Trademark Office; U.S. DEPARTMENT OF COMMERCE
Under the Paperwork Reduction act of 1995, no persons are required to respond to a collection of information unless it displays a valid OMB control number.

Substitute for form 1449A/PTO

INFORMATION DISCLOSURE STATEMENT BY APPLICANT

(use as many sheets as necessary))

Sheet	2	Of	2

Complete if Known	
Application Number	09/399,578
Filing Date	09/20/1999
First Named Inventor	
Group Art Unit	2155
Examiner Name	Winder, Patrice L.
Attorney Docket Number	

OTHER ART -- NON PATENT LITERATURE DOCUMENTS		
Examiner Initials*	Cite No.[1]	Include name of the author (in CAPITAL LETTERS), title of the article (when appropriate), title of the item (book, magazine, journal, serial, symposium, catalog, etc.), date, page(s), volume-issue number(s), publisher, city and/or country where published.
	A13	*Windy City Innovations, LLC v. America Online, Inc.*, Civil Action No. 04 C 4240, "AOL's Third Supplemental Response to Plaintiff Windy City Innovations, LLC's First Set of Interrogatories (No. 4)" dated 8/11/2005
	A14	*Windy City Innovations, LLC v. America Online, Inc.*, Civil Action No. 04 C 4240, "AOL's Fourth Supplemental Response to Plaintiff Windy City Innovations, LLC's First Set of Interrogatories (No. 4)" dated 9/26/2005
	A15	*Windy City Innovations, LLC v. America Online, Inc.*, Civil Action No. 04 C 4240, "AOL's Fifth Supplemental Response to Plaintiff Windy City Innovations, LLC's First Set of Interrogatories (No. 4)" dated 9/27/2005
	A16	*Windy City Innovations, LLC v. America Online, Inc.*, Civil Action No. 04 C 4240, "Declaration of Mr. David W. Jeske" dated 6/6/2005
	A17	"Netscape adds tools," Responsive Database Services, Inc., Press Release 3/1995 (AOL 1206861 – 1206862)
	A18	"Netscape communications introduces Netscape internet applications family for electronic commerce," PR Newswire Association, Inc., Press Release, 3/1995 (AOL 1206863 – 1206864)
	A19	"Full Scale Commerce With Netscape," Business Communications Co., Press Release, 4/1995 (AOL 1206865 – 1206866)
	A20	"NetScape spins Web extensions," adds firewall, Usenet servers, electronic shopping software NetScape Communications Proxy Server, Iscre, Merchant System, Publishing System, Community System," Information Access Company, 4/1995 (AOL 1206867 – 1206868)
	A21	"Netscape offers bookmark, chat services on Web," InfoWorld Media Group, 8/1995 (AOL 1206869)
	A22	"Netscape For Windows 95 Announced," Newsweek Business Information, Inc., 8/1995 (AOL 1206870- 1206873)
	A23	"Netscape introduces Netscape Smartmarks ™ and Netscape Chat ™; Applications Bring New Navigation and Communications Capabilities to Users of Netscape Navigator for Windows," Netscape Chat Help Contents (AOL 613173 – 613243)

EXAMINER	DATE CONSIDERED

EXAMINER: Initial if reference considered, whether or not citation is in conformance with MPEP 609; Draw line through citation if not in conformance and not considered. Include copy of this form with next communication to applicant.
[1]Applicant's unique citation designation number (optional). [2]See Kinds Codes of USPTO Patent Documents at www.uspto.gov or MPEP 901.04. [3] Enter Office that issued the document, by the two-letter code (WIPO Standard ST.3). [4]For Japanese patent documents, the indication of the year of the reign of the Emperor must precede the serial number of the patent document. [5]Kind of document by the appropriate symbols as indicated on the document under WIPO Standard St. 16 if possible. [6]Applicant is to place a check mark here if English language Translation is attached.

OIPE IAP2 SEP 08 2005 PATENT & TRADEMARK OFFICE

PTO/SB/08A (08-03)
U.S. Patent and Trademark Office: U.S. DEPARTMENT OF COMMERCE
Under the Paperwork Reduction act of 1995, no persons are required to respond to a collection of information unless it contains a valid OMB control number.

Substitute for form 1449A/PTO

INFORMATION DISCLOSURE STATEMENT BY APPLICANT

(use as many sheets as necessary)

Sheet 1 of 8

Complete if Known	
Application Number	09/399,578
Filing Date	09/20/1999
First Named Inventor	Marks, Daniel L.
Group Art Unit	2155
Examiner Name	Winder, Patrice L.
Attorney Docket Number	

U.S. PATENT DOCUMENTS

Examiner Initial*	Cite No.[1]	Document Number Number-Kind Code[2] (if known)	Publication Date MM-DD-YYYY	Name of Patentee or Applicant of Cited Document	Pages, Columns, Lines, Where Relevant Passages or Relevant Figures Appear
	A1	5,613,056	03/18/1997	Gasper, et al.	
	A2	5,617,539	04/01/1997	Ludwig, et al.	
	A3	5,627,978	05/06/1997	Altom, et al.	
	A4	5,682,469	10/28/1997	Linnett, et al.	
	A5	5,713,019	01/27/1998	Keaten	
	A6	5,721,763	02/24/1998	Joseph, et al.	
	A7	5,729,684	05/17/1998	Kuzma	
	A8	5,754,775	05/19/1998	Adamson, et al.	
	A9	5,784,568	07/21/1998	Needham	
	A10	5,794,006	08/11/1998	Sanderman	
	A11	5,794,210	08/11/1998	Goldhaber, et al.	
	A12	5,801,700	09/01/1998	Ferguson	
	A13	5,802,281	09/01/1998	Clapp, et al.	
	A14	5,822,523	10/13/1998	Rothschild, et al.	
	A15	5,850,442	12/15/1998	Muftic	
	A16	5,880,731	03/09/1999	Liles, et al.	
	A17	5,889,843	03/30/1999	Singer, et al.	
	A18	5,924,082	07/13/1999	Silverman, et al.	
	A19	5,933,599	08/03/1999	Nolan	
	A20	5,941,947	08/24/1999	Brown, et al.	
	A21	5,974,409	10/26/1999	Sanu, et al.	
	A22	5,987,401	11/16/1999	Trudeau	
	A23	6,692,359	02/17/2004	Williams, et al.	
	A24	4,710,917	12/01/1987	Tompkins, et al.	
	A25	4,953,159	08/28/1990	Hayden, et al.	
	A26	5,195,086	03/16/1993	Baumgartner, et al.	
	A27	5,257,306	10/26/1993	Watanabe	
	A28	5,347,306	09/13/1994	Nitta	
	A29	5,465,370	11/07/1995	Ito, et al.	
	A30	5,471,318	11/28/1995	Ahuja, et al.	
	A31	5,491,743	02/13/1996	Shiio, et. al.	
	A32	5,572,248	11/05/1996	Allen, et al.	
	A33	5,572,643	11/05/1996	Judson	

EXAMINER SIGNATURE		DATE CONSIDERED	

*EXAMINER: Initial if reference considered, whether or not citation is in conformance with MPEP 609; Draw line through citation if not in conformance and not considered. Include copy of this form with next communication to applicant. [1]Applicant's unique citation designation number (optional). [2]See Kinds Codes of USPTO Patent Documents at www.uspto.gov or MPEP 901.04. [3] Enter Office that issued the document, by the two-letter code (WIPO Standard ST.3). [4]For Japanese patent documents, the indication of the year of the reign of the Emperor must precede the serial number of the patent document. [5]Kind of document by the appropriate symbols as indicated on the document under WIPO Standard St. 16 if possible. [6]Applicant is to place a check mark here if English language Translation is attached.

This collection of information is required by 37 CFR 1.97 and 1.98. The information is required to obtain or retain a benefit by the public which is to file (and by the USPTO to process) an application. Confidentiality is governed by 35 U.S.C. 122 and 37 CFR 1.14. This collection is estimated to take 2 hours to complete, including gathering, preparing, and submitting the completed application form to the USPTO. Time will vary depending upon the individual case. Any comments on the amount of time you require to complete this form and/or suggestions for reducing this burden, should be sent to the Chief Information Officer, U.S. Patent and Trademark Office, P.O. Box 1450 Alexandria, VA 22313-1450. DO NOT SEND FEES OR COMPLETED FORMS TO THIS ADDRESS. **Send TO: Commissioner for Patents, P.O. Box 1450, Alexandria, VA 22313-1450.**

If you need assistance in completing the form, call 1-800-PTO-9199 (1800-786-9199) and select option 2.

Petitioner Microsoft Corporation, Ex. 1002, p. 3155

PTO/SB/08A (10-01)
Approved for use through 10/31/2002. OMB 0651-0031
U.S. Patent and Trademark Office; U.S. DEPARTMENT OF COMMERCE
Under the Paperwork Reduction act of 1995, no persons are required to respond to a collection of information unless it displays a valid OMB control number

Substitute for form 1449A/PTO

INFORMATION DISCLOSURE STATEMENT BY APPLICANT

(use as many sheets as necessary)

Sheet	2	Of	8

Complete if Known	
Application Number	09/399,578
Filing Date	09/20/1999
First Named Inventor	2155
Group Art Unit	2155
Examiner Name	Winder, Patrice L.
Attorney Docket Number	

U.S. PATENT DOCUMENTS

Examiner Initial*	Cite No.[1]	Document Number Number-Kind Code[2] (if known)	Publication Date MM-DD-YYYY	Name of Patentee or Applicant of Cited Document	Pages, Columns, Lines, Where Relevant Passages or Relevant Figures Appear
	A34	5,592,478	01/07/1997	Weiss	
	A35	5,440,624	08/08/1995	Schoof, II	
	A36	5,774,668	06/30/1998	Choquier, et al.	
	A37	5,799,151	08/25/1998	Hoffer	
	A38	5,812,552	09/22/1998	Arora, et al.	
	A39	5,826,085	10/20/1998	Bennett, et al.	
	A40	5,933,599	08/03/1999	Nolan	
	A41	5,956,509	09/21/1999	Kevner	

FOREIGN PATENT DOCUMENTS

Examiner Initials*	Cite No.[1]	Foreign Patent Document Country Code[3]-Number[4]-Kind Code[5] (if known)	Publication Date MM-DD-YYYY	Name of Patentee or Applicant of Cited Document	Pages, Columns, Lines, Where Relevant Passages or Relevant Figures Appear	T[6]

OTHER ART -- NON PATENT LITERATURE DOCUMENTS

Examiner Initials*	Cite No.[1]	Include name of the author (in CAPITAL LETTERS), title of the article (when appropriate), title of the item (book, magazine, journal, serial, symposium, catalog, etc.), date, page(s), volume-issue number(s), publisher, city and/or country where published
	A42	*Windy City Innovations, LLC v. America Online, Inc.*, Civil Action No. 04 C 4240, "Complaint" filed 6/24/2004.
	A43	*Windy City Innovations, LLC v. America Online, Inc.*, Civil Action No. 04 C 4240, "Notice of Claim Involving a Patent" filed 6/24/2004.
	A44	*Windy City Innovations, LLC v. America Online, Inc.*, Civil Action No. 04 C 4240, "First Amended Answer to the Complaint, and Counterclaim of Defendant America Online, Inc." filed 9/14/2004.
	A45	*Windy City Innovations, LLC v. America Online, Inc.*, Civil Action No. 04 C 4240, "Plaintiff's Reply to the First Amended Counterclaim of Defendant America Online, Inc." filed 9/28/2004.
	A46	*Windy City Innovations, LLC v. America Online, Inc.*, Civil Action No. 04 C 4240, "AOL's Supplemental Response to Plaintiff Windy City Innovations, LLC's First Set of Interrogatories (No. 4)" dated April 29, 2005.

EXAMINER	DATE CONSIDERED

EXAMINER: Initial if reference considered, whether or not citation is in conformance with MPEP 609; Draw line through citation if not in conformance and not considered. Include copy of this form with next communication to applicant.

[1]Applicant's unique citation designation number (optional). [2]See Kinds Codes of USPTO Patent Documents at www.uspto.gov or MPEP 901.04. [3] Enter Office that issued the document, by the two-letter code (WIPO Standard ST.3). [4]For Japanese patent documents, the indication of the year of the reign of the Emperor must precede the serial number of the patent document. [5]Kind of document by the appropriate symbols as indicated on the document under WIPO Standard St. 16 if possible. [6]Applicant is to place a check mark here if English language Translation is attached.

Petitioner Microsoft Corporation, Ex. 1002, p. 3156

PTO/SB/08A (10-01)
Approved for use through 10/31/2002. OMB 0651-0031
U.S. Patent and Trademark Office; U.S. DEPARTMENT OF COMMERCE
Under the Paperwork Reduction act of 1995, no persona are required to respond to a collection of information unless it displays a valid OMB control number.

Substitute for form 1449A/PTO

INFORMATION DISCLOSURE STATEMENT BY APPLICANT

(use as many sheets as necessary))

Sheet	3	Of	8

Complete if Known	
Application Number	09/399,578
Filing Date	09/20/1999
First Named Inventor	2155
Group Art Unit	2155
Examiner Name	Winder, Patrice L.
Attorney Docket Number	

OTHER ART -- NON PATENT LITERATURE DOCUMENTS		
Examiner Initials*	Cite No.[1]	Include name of the author (in CAPITAL LETTERS), title of the article (when appropriate), title of the item (book, magazine, journal, serial, symposium, catalog, etc.), date, page(s), volume-issue number(s), publisher, city and/or country where published
	A47	*Windy City Innovations, LLC v. America Online, Inc.*, Civil Action No. 04 C 4240, "AOL's Second Supplemental Response to Plaintiff Windy City Innovations, LLC's First Set of Interrogatories (No. 4)" dated May 20, 2005.
	A48	NETSCAPE, "Netscape Power Pack Bookmarks, Chat, and Multimedia Add-Ons". (AOL 613167-613172)
	A49	NETSCAPE, "Netscape Announces Add-On Product Suite for Popular Netscape Navigator Software, Netscape Power Pack Includes Netscape SmartMarks, Netscape Chat and Multimedia Add-On Applications From Adobe, Apple, and Progressive Networks" Press Release, 05/11/2005, pp. 1-3. (AOL 613244-613246)
	A50	PR NEWSWIRE ASSOC., INC. "Netscape Announces Add-On Product Suite For Popular Netscape Navigator™ Software" Article, 10/25/1999, pp. 1-2. (AOL 613247-613248)
	A51	NETSCAPE, "Netscape Chat Help Contents" Manual. (AOL 613173-613243)
	A52	WIRED CHANNELING "Tips for Foiling the NSA" Article, 01/1996, pg. 174. (AOL 469104-469105)
	A53	FLASH NEWS "Market Support News Jacksonville Update" Article, 05/19/1995, pp. 1-4, (AOL 469106-469109)
	A54	PALFREYMAN, et al., "A Protocol for User Awareness on the World Wide Web", Article, 1996, pp. 130-139. (AOL 469110-469119)
	A55	ROBINETT, "Interactivity and Individual Viewpoint in Shared Virtual Worlds: The Big Screen vs. Networked Personal Displays", Article, Computer Graphics, Vol. 28, No. 2, 05/1994, pp. 127-130. (AOL 074871-074874)
	A56	OHYA, et al., "Real-Time Reproduction of 3D Human Images in Virtual Space Teleconferencing", Article, pp. 408-414. (AOL 074875-074881)
	A57	FUKUDA, et al., "Hypermedia Personal Computer Communication System : Fujitsu Habitat", Fujitsu Sci. Tech. J., 10/1990, Vol. 26, No. 3, pp. 197-206. (AOL 074882-074893)
	A58	CARLSSON, "DIVE – a Multi-User Virtual Reality System", Article, IEEE 1993, pp. 394-400. (AOL 074894-074900)
	A59	BENFORD, et al., "Supporting Cooperative Work in Virtual Environments", The Computer Journal, Vol. 37, No. 8, 1994, pp. 653-668. (AOL 074901-074916)
	A60	FARALLON COMPUTING, INC., "Timbuktu™ User's Guide, Manual, pp. 1-98. (AOL 074917-075026)
	A61	BERLAGE, et al., "A Framework For Shared Applications With a Replicated Architecture", Article, 11/3-5/1993, pp. 249-257. (AOL 075027-075035)
	A62	SOHLENKAMP, "A Virtual Office Environment Supporting Shared Applications", Article, 02/7-11/1994. (AOL 075036-075044)

EXAMINER	DATE CONSIDERED

EXAMINER: Initial if reference considered, whether or not citation is in conformance with MPEP 609; Draw line through citation if not in conformance and not considered. Include copy of this form with next communication to applicant.

[1]Applicant's unique citation designation number (optional). [2]See Kinds Codes of USPTO Patent Documents at www.uspto.gov or MPEP 901.04. [3] Enter Office that issued the document, by the two-letter code (WIPO Standard ST.3). [4]For Japanese patent documents, the indication of the year of the reign of the Emperor must precede the serial number of the patent document. [5]Kind of document by the appropriate symbols as indicated on the document under WIPO Standard St. 16 if possible. [6]Applicant is to place a check mark here if English language Translation is attached.

Petitioner Microsoft Corporation, Ex. 1002, p. 3157

PTO/SB/08A (10-01)
Approved for use through 10/31/2002. OMB 0651-0031
U.S. Patent and Trademark Office; U.S. DEPARTMENT OF COMMERCE
Under the Paperwork Reduction act of 1995, no persons are required to respond to a collection of information unless it displays a valid OMB control number.

Substitute for form 1449A/PTO

INFORMATION DISCLOSURE STATEMENT BY APPLICANT

(use as many sheets as necessary))

Sheet	4	Of	8

Complete if Known	
Application Number	09/399,578
Filing Date	09/20/1999
First Named Inventor	2155
Group Art Unit	2155
Examiner Name	Winder, Patrice L.
Attorney Docket Number	

OTHER ART -- NON PATENT LITERATURE DOCUMENTS		
Examiner Initials*	Cite No.[1]	Include name of the author (in CAPITAL LETTERS), title of the article (when appropriate), title of the item (book, magazine, journal, serial, symposium, catalog, etc.), date, page(s), volume-issue number(s), publisher, city and/or country where published
	A63	FARALLON COMPUTING, INC., "Timbuktu/Remote™ User's Guide", Article, pp. 6-8. (AOL 075063-075066)
	A64	GAJEWSKA, et al., "Argo: A System for Distributed Collaboration", Article, pp. 1-12. (AOL 075080-075091)
	A65	HANDLEY, et al., "CCCP: Conference Control Channel Protocol A Scalable Base for Building Conference Control Applications", pp. 1-18. (AOL 075092-075109)
	A66	BAHR, et al., "Multimedia Conferencing in a Packet Switched Environment", Article. (AOL 075110-075113)
	A67	SASSE, et al., "Multimedia Conferencing over the Internet, The MICE Project", Article, pp. 1-17. (AOL 075114-075130)
	A68	SASSE, et al., "Interacting with Multi-media, Multi-user Systems: Observations on Multi-Media Conferencing Tools", Article. (AOL 075131-075144)
	A69	HANDLEY, et al., "The Conference Control Channel Protocol (CCCP): A Scalable Base for Building Conference Control Applications", Article, 1995, pp. 275-287. (AOL 075145-075157)
	A70	SASSE, et al., "Remote Seminars through Multimedia Conferencing: Experiences from the MICE Project", Article, Proc. INET '94/JENC5, pp. 1-8. (AOL 075158-075165)
	A71	HANDLEY, et al., "Multimedia Integrated Conferencing for European Researchers (MICE): Piloting Activities and the Conference Management and Multiplexing Centre", Article, pp. 1-14. (AOL 075183-075196)
	A72	KIRSTEIN, et al., "Piloting of Multimedia Integrated Communications for European Researchers (MICE)", Article, Proc. INET '93, pp. 1-12. (AOL 075197-075208)
	A73	KIRSTEIN, et al., "Recent Activities in the MICE Conferencing Project", Article, Proc. INET '95. (AOL 075209-075218)
	A74	TURLETTI, "The INRIA Videoconferencing System", Article, pp. 1-7. (AOL 075219-075225)
	A75	BAHR, et al., "Incorporating Security Functions in Multimedia Conferencing Applications in the Context of the MICE Project", Article. (AOL 075226-075233)
	A76	BILTING, et al., "International Research Seminars through Multimedia conferencing: Experiences from the MICE Project", Article. (AOL 075234-075237)
	A77	SASSE, et al., "Multimedia Conferencing Over The Internet: The MICE Project and Tools", Article, pp. 1-11. (AOL 075238-075248)
	A78	SASSE, et al., "Remote Seminars through Multimedia Conferencing: Experiences from the MICE Project", Article, Proc. INET '94/JENC5. (AOL 075249-075260)
	A79	CLAYMAN, et al., "The Interworking of Internet and ISDN Networks for Multimedia Conferencing", Article, pp. 1-28. (AOL 075261-075288)
	A80	BYTE, "Network and Windows 95 Take Top BYTE Awards", Article, July 1995. (AOL 055731-055732)

EXAMINER	DATE CONSIDERED

EXAMINER: Initial if reference considered, whether or not citation is in conformance with MPEP 609; Draw line through citation if not in conformance and not considered. Include copy of this form with next communication to applicant.

[1]Applicant's unique citation designation number (optional). [2]See Kinds Codes of USPTO Patent Documents at www.uspto.gov or MPEP 901.04. [3] Enter Office that issued the document, by the two-letter code (WIPO Standard ST.3). [4]For Japanese patent documents, the indication of the year of the reign of the Emperor must precede the serial number of the patent document. [5]Kind of document by the appropriate symbols as indicated on the document under WIPO Standard St. 16 if possible. [6]Applicant is to place a check mark here if English language Translation is attached.

Petitioner Microsoft Corporation, Ex. 1002, p. 3158

PTO/SB/08A (10-01)
Approved for use through 10/31/2002. OMB 0651-0031
U.S. Patent and Trademark Office; U.S. DEPARTMENT OF COMMERCE
Under the Paperwork Reduction act of 1995, no persons are required to respond to a collection of information unless it displays a valid OMB control number.

Substitute for form 1449A/PTO

INFORMATION DISCLOSURE STATEMENT BY APPLICANT

(use as many sheets as necessary))

Sheet	5	Of	8

Complete if Known	
Application Number	09/399,578
Filing Date	09/20/1999
First Named Inventor	2155
Group Art Unit	2155
Examiner Name	Winder, Patrice L.
Attorney Docket Number	

OTHER ART -- NON PATENT LITERATURE DOCUMENTS		
Examiner Initials*	Cite No.[1]	Include name of the author (in CAPITAL LETTERS), title of the article (when appropriate), title of the item (book, magazine, journal, serial, symposium, catalog, etc.), date, page(s), volume-issue number(s), publisher, city and/or country where published
	A81	COMPUSERVE, "CompuServe Producer User Guide", Article, 04/19/1995, pp. 1-36. (AOL 055743-055779)
	A82	REESE, et al., "Online with Start Kesmai Air Warrior", Article. (AOL 055780-055781)
	A83	MAWBY, "Designing Collaborative Writing Tools", Article, 1991, pp. 1-191. (AOL 074678-074870)
	A84	DONATH, "The Illustrated Conversation", Article, 1995, pp. 79-88. (AOL 052115-052124)
	A85	DONATH, "Sociable Information Spaces", Article, 06/20-22/1995, pp. 269-273. (AOL 052127-052131)
	A86	MASINTER, "Collaborative Information Retrieval: Gopher from MOO", Article, Proc. INET '93. (AOL 052153-052161)
	A87	ROSEMAN, et. al., "TeamRooms: Groupware for Shared Electronic Spaces", Article. (AOL 052162-052163)
	A88	ROSEMAN, "Managing Complexity in TeamRooms, a Tcl-Based Internet Groupware Application", Article. (AOL 052164-052171)
	A89	ROSEMAN, et. al., "TeamRooms: Network Places for Collaboration", Article. (AOL 052172-052180)
	A90	CURTIS, "Mudding: Social Phenomena in Text-Based Virtual Realities", Article, 03/03/1992, pp. 1-21. (AOL 052181-052201)
	A91	NICHOLS, et. al., "High-Latency, Low-Bandwidth Windowing in the Jupiter Collaboration System", Article, UIST '95, 11/14-17/1995, pp. 111-120. (AOL 052202-052211)
	A92	CURTIS, et. al., "The Jupiter Audio/Video Architecture: Secure Multimedia in Network Places", Article, 1995, pp. 1-12. (AOL 052212-052223)
	A93	CRAMPTON, "MUSK – a Multi-User Sketch Program", Article, pp. 17-29. (AOL 052224-052236)
	A94	BONFIGLIO, et al., "Conference Toolkit: A Framework for Real-Time Conferencing", Article, pp. 303-316. (AOL 052237-052250)
	A95	LEE, "Xsketch: A Multi-User Sketching Tool For X11", Article, 1990, pp. 169-173. (AOL 052251-052255)
	A96	AHUJA, et al., "Supporting Multi-Phase Groupware Over Long Distances", Article, 1989 IEEE, pp. 1227-1231. (AOL 052256-052260)
	A97	AHUJA, et al., "A Comparison of Application Sharing Mechanisms in Real-Time DeskTop Conferencing Systems", Article, pp. 238-248. (AOL 052261-052271)
	A98	PATTERSON, et al., "Rendezvous: An Architecture for Synchronous Multi-User Applications", Article, 10/1990, pp. 317-328. (AOL 052272-052283)
	A99	PATTERSON, "Comparing the Programming Demands of Single-User and Multi-User Applications", Article, UIST'91, 11/11-13/1991, pp. 87-94. (AOL 052284-052291)

EXAMINER	DATE CONSIDERED

EXAMINER: Initial if reference considered, whether or not citation is in conformance with MPEP 609; Draw line through citation if not in conformance and not considered. Include copy of this form with next communication to applicant.

[1]Applicant's unique citation designation number (optional). [2]See Kinds Codes of USPTO Patent Documents at www.uspto.gov or MPEP 901.04. [3] Enter Office that issued the document, by the two-letter code (WIPO Standard ST.3). [4]For Japanese patent documents, the indication of the year of the reign of the Emperor must precede the serial number of the patent document. [5]Kind of document by the appropriate symbols as indicated on the document under WIPO Standard St. 16 if possible. [6]Applicant is to place a check mark here if English language Translation is attached.

Petitioner Microsoft Corporation, Ex. 1002, p. 3159

PTO/SB/08A (10-01)
Approved for use through 10/31/2002. OMB 0651-0031
U.S. Patent and Trademark Office; U.S. DEPARTMENT OF COMMERCE
Under the Paperwork Reduction act of 1995, no persons are required to respond to a collection of information unless it displays a valid OMB control number.

Substitute for form 1449A/PTO

INFORMATION DISCLOSURE STATEMENT BY APPLICANT

(use as many sheets as necessary)

Sheet	6	Of	8

Complete if Known	
Application Number	09/399,578
Filing Date	09/20/1999
First Named Inventor	2155
Group Art Unit	2155
Examiner Name	Winder, Patrice L.
Attorney Docket Number	

OTHER ART -- NON PATENT LITERATURE DOCUMENTS		
Examiner Initials*	Cite No.[1]	Include name of the author (in CAPITAL LETTERS), title of the article (when appropriate), title of the item (book, magazine, journal, serial, symposium, catalog, etc.), date, page(s), volume-issue number(s), publisher, city and/or country where published
	A100	LU, et al. "Idea Management In a Shared Drawing Tool", Article, ECSCW 1991, pp. 97-112. (AOL 052292-052307)
	A101	LU, "Supporting Idea Management in a Shared Drawing Tool", Article, 1992, pp. 29-113. (AOL 052308-052364)
	A102	WEXELBLAT, "Building Collaborative Interfaces", Article, 05/1991, pp. 1-40. (AOL 052365-052405)
	A103	WATABE, et al., "Distributed Desktop Conferencing System with Multiuser Multimedia Interface", Article, 1991 IEEE, pp. 531-539. (AOL 052406-052414)
	A104	WATABE, et al., "Distributed Multiparty Desktop Conferencing System: MERMAID", Article, 10/1990, pp. 27-38. (AOL 052415-052426)
	A105	HORN, et al., "An ISDN Multimedia Conference Bridge", Article, 1990 IEEE, pp. 853-856. (AOL 052427-052430)
	A106	AHUJA, et al., "Coordination and Control of Multimedia Conferencing", Communications Magazine, IEEE, 05/1992, Vol. 30, Iss. 5, pp. 38-43. (AOL 052431-052436)
	A107	ENSOR, et al., "The Rapport Multimedia Conferencing System-A Software Overview", Article, Proc. 2nd IEEE, 03/1998, pp. 52-58. (AOL 052437-052443)
	A108	GREENBERG, "Personalizable Groupware: Accomodating Individual Roles and Group Differences", Article, ECSCW 1991, pp. 17-32. (AOL 052444-052459)
	A109	GREENBERG, "Sharing Views and Interactions With Single-User Applications", Article, 04/1990, pp. 227-237. (AOL 052460-052470)
	A110	SARIN, et al., "Software for Interactive On-Line Conferences", Article, 1984, pp. 46-58. (AOL 052471-052484)
	A111	BLY, et al., "Media Spaces: Bringing People Together in a Video, Audio, and Computing Environment", Article, 01/1993, Vol. 36, No. 1, pp. 28-47. (AOL 052486-052505)
	A112	NCSA, "The Second International WWW Conference '94 Mosaic and the Web", 07/14/1994. (AOL 052506-052509)
	A113	FRIVOLD, et al., "Extending WWW for Synchronous Collaboration", Article. (AOL 052510-052518)
	A114	"Channel List for Meeting DSTC YarnDemo", Article. (AOL 052523-052530)
	A115	DONATH, et al., "The Social Web", Article. (AOL 052531-052534)
	A116	GOLDBERG, et al. "Beyond the Web: Excavating the Real World Via Mosaic", Article. (AOL 052535-052546)
	A117	WEYMOUTH, et al., "The Upper Atmospheric Research Collaboratory: UARC", Article. (AOL 052547-052552)
	A118	SCHARF, et al., "Using Mosaic for Remote Test System Control Supports Distributed Engineering", Article. (AOL 052553-052561)

EXAMINER	DATE CONSIDERED

EXAMINER: Initial if reference considered, whether or not citation is in conformance with MPEP 609; Draw line through citation if not in conformance and not considered. Include copy of this form with next communication to applicant.

[1]Applicant's unique citation designation number (optional). [2]See Kinds Codes of USPTO Patent Documents at www.uspto.gov or MPEP 901.04. [3] Enter Office that issued the document, by the two-letter code (WIPO Standard ST.3). [4]For Japanese patent documents, the indication of the year of the reign of the Emperor must precede the serial number of the patent document. [5]Kind of document by the appropriate symbols as indicated on the document under WIPO Standard St. 16 if possible. [6]Applicant is to place a check mark here if English language Translation is attached.

Petitioner Microsoft Corporation, Ex. 1002, p. 3160

PTO/SB/08A (10-01)
Approved for use through 10/31/2002. OMB 0651-0031
U.S. Patent and Trademark Office; U.S. DEPARTMENT OF COMMERCE
Under the Paperwork Reduction act of 1995, no persons are required to respond to a collection of information unless it displays a valid OMB control number.

Substitute for form 1449A/PTO

INFORMATION DISCLOSURE STATEMENT BY APPLICANT

(use as many sheets as necessary)

Sheet	7	Of	8

Complete if Known	
Application Number	09/399,578
Filing Date	09/20/1999
First Named Inventor	2155
Group Art Unit	2155
Examiner Name	Winder, Patrice L.
Attorney Docket Number	

OTHER ART – NON PATENT LITERATURE DOCUMENTS		
Examiner Initials*	Cite No.[1]	Include name of the author (in CAPITAL LETTERS), title of the article (when appropriate), title of the item (book, magazine, journal, serial, symposium, catalog, etc.), date, page(s), volume-issue number(s), publisher, city and/or country where published
	A119	FREGA, et al., "A Multimedia Bulletin Board in WWW Environment", Article. (AOL 052567-052574)
	A120	HORN, et al., "An ISDN Multimedia Conference Bridge", Article, IEEE Region 10, 09/1990, pp. 853-856. (AOL 052575-052578)
	A121	TANG, et al., "Montage: Providing Teleproximity for Distributed Groups", Article, 04/24-28/1994, pp. 37-43. (AOL 052579-052585)
	A122	PEARL, "System Support for Integrated Desktop Video Conferencing", Article, 12/1992, pp. 1-14. (AOL 052586-052600)
	A123	CHANG, et al., "Group Coordination in Participant Systems", Article, 05/1990, pp. 589-599. (AOL 052601-052611)
	A124	ENSOR, et al., "User Interfaces For Multimedia Multiparty Communications", Article, 1993 IEEE, pp. 1165-1171. (AOL 052612-052618)
	A125	TANG, et al., "Supporting Distributed Groups with a Montage of Lightweight Interactions", Article, 1994, pp. 23-34. (AOL 052619-052630)
	A126	BRINCK, et al., "A Collaborative Medium for the Support of Conversational Props", Article, 11/1992, pp. 171-178. (AOL 052636-052643)
	A127	GRAHAM, et al., "Relational Views as a Model for Automatic Distributed Implementation of Multi-User Applications", Article, 11/1992, pp. 59-66. (AOL 052644-052651)
	A128	REIN, et al., "rIBIS: A Real-Time Group Hypertext System", Article, 1991, pp. 349-367. (AOL 052652-052670)
	A129	GIBBS, "LIZA: An Extensible Groupware Toolkit", Article, 1989, pp. 29-35. (AOL 052671-052677)
	A130	CLARK, "Multipoint Multimedia Conferencing", Article, 05/1992 IEEE, pp. 44-50. (AOL 052678-052684)
	A131	WOLF, et al., "We-Met (Window Environment-Meeting Enhancement Tools)", Article, pp. 441-442. (AOL 052695-052696)
	A132	HILL, et al., "The Rendezvous Language and Architecture", Article, 01/1993, Vol. 36, No. 1, pp. 62-67. (AOL 052697-052702)
	A133	HILL, et al., "The Rendezvous Architecture and Language for Constructing Multiuser Applications," ACM Transactions on Computer-Human Interaction, 06/1994, Vol. 1, No. 2, pp. 81-125 (AOL 052703-052747)
	A134	WOO, et al., "A Synchronous Collaboration Tool for World-Wide Web," Distributed Systems Technology Centre, The University of Queensland, Queensland 4072 (AOL 052519-052530)

EXAMINER	DATE CONSIDERED

EXAMINER: Initial if reference considered, whether or not citation is in conformance with MPEP 609; Draw line through citation if not in conformance and not considered. Include copy of this form with next communication to applicant.

[1]Applicant's unique citation designation number (optional). [2]See Kinds Codes of USPTO Patent Documents at www.uspto.gov or MPEP 901.04. [3] Enter Office that issued the document, by the two-letter code (WIPO Standard ST.3). [4]For Japanese patent documents, the indication of the year of the reign of the Emperor must precede the serial number of the patent document. [5]Kind of document by the appropriate symbols as indicated on the document under WIPO Standard St. 16 if possible. [6]Applicant is to place a check mark here if English language Translation is attached.

Petitioner Microsoft Corporation, Ex. 1002, p. 3161

PTO/SB/08A (10-01)
Approved for use through 10/31/2002. OMB 0651-0031
U.S. Patent and Trademark Office; U.S. DEPARTMENT OF COMMERCE
Under the Paperwork Reduction act of 1995, no persons are required to respond to a collection of information unless it displays a valid OMB control number.

Substitute for form 1449A/PTO

INFORMATION DISCLOSURE STATEMENT BY APPLICANT

(use as many sheets as necessary)

Sheet	8	Of	8

Complete if Known	
Application Number	09/399,578
Filing Date	09/20/1999
First Named Inventor	2155
Group Art Unit	2155
Examiner Name	Winder, Patrice L.
Attorney Docket Number	

OTHER ART -- NON PATENT LITERATURE DOCUMENTS		
Examiner Initials*	Cite No.[1]	Include name of the author (in CAPITAL LETTERS), title of the article (when appropriate), title of the item (book, magazine, journal, serial, symposium, catalog, etc.), date, page(s), volume-issue number(s), publisher, city and/or country where published
	A135	BUXTON, et al., "Europarc's Integrated Interactive Intermedia Facility (IIIF): Early Experiences". In S. Gibbs & A.A. Verrijn-Stuart (Eds.). *Multiuser interfaces and applications, Proceedings of the IFIP WG 8.4 Conference on Multi-user Interfaces and Applications,* Heraklion, Crete. Amsterdam: Elsevier Science Publishers B.V. (North-Holland), 11-34. (AOL 052756-052764)
	A136	SOHLENKAMP, et al., "Integrating Communication, Cooperation, and Awareness: The DIVA Virtual Office Environment," Article, pp. 331-343. (AOL 052765-052777)
	A137	KRISHNAMURTHY, et al., "Yeast: A General Purpose Event-Action System," IEEE Transactions on Software Engineering, Vol. 21, No. 10, October 1995. (AOL 052778-052790)
	A138	LÖVSTRAND, et al., "Being Selectively Aware with the Khronika System," Proceedings of the Second European Conference on Compuber-Supported Cooperative Work, September 25-57, 1991, Amsterdam, The Netherlands, pp. 265-277. (AOL 052791-052803)
	A139	DOURISH, et al., "Portholes: Supporting Awareness in a Distributed Work Group," Chi '92, May 3-7, 1992, pp. 541-547. (AOL 052804-052810)
	A140	GAVER, et al., "Realizing a Video Environment: Europarc's Rave System," Chi '92, May 3-7, 1992, pp. 27-35. (AOL 052811-052819)
	A141	BORNING, et al., "Two Approaches to Casual Interaction Over Computer and Video Networks," pp. 13-19. (AOL 052820-052826)

EXAMINER	DATE CONSIDERED

EXAMINER: Initial if reference considered, whether or not citation is in conformance with MPEP 609; Draw line through citation if not in conformance and not considered. Include copy of this form with next communication to applicant.

[1]Applicant's unique citation designation number (optional). [2]See Kinds Codes of USPTO Patent Documents at www.uspto.gov or MPEP 901.04. [3] Enter Office that issued the document, by the two-letter code (WIPO Standard ST.3). [4]For Japanese patent documents, the indication of the year of the reign of the Emperor must precede the serial number of the patent document. [5]Kind of document by the appropriate symbols as indicated on the document under WIPO Standard St. 16 if possible. [6]Applicant is to place a check mark here if English language Translation is attached.

Petitioner Microsoft Corporation, Ex. 1002, p. 3162

Form PTO-1449 (modified)	Atty. Docket No. AIS-P1-99	Serial No. 09/339,578
List of Patents and Publications for Applicant's INFORMATION DISCLOSURE STATEMENT (Use several sheets if necessary)	Applicant: Daniel L. Marks	
	Filing Date: September 20, 1999	Group: 2765

OIPE IAP2 SEP 08 2005 PATENT & TRADEMARK OFFICE

U.S. Patent Documents	Foreign Patent Documents	Other Art
See Page 1	*See Page 1*	*See Page 1*

U.S. Patent Documents

Exam. Init.	Ref. Des.	Document Number	Date	Name	Class	Sub Class	Filing Date if App.
	A1	5,616,876	Apr. 1, 1997	Cluts	84	609	April 19, 1995
	A2	5,793,365	Aug. 11, 1998	Tang et al.	345	329	Jan. 2, 1996
	A3	5,832,212	Nov. 3, 1998	Cragun et al.	395	188.01	April 19, 1996
	A4	5,941,947	Aug. 24, 1999	Brown et al.	709	225	Aug. 18, 1995

Foreign Patent Documents

Exam. Init.	Ref. Des.	Document Number	Date	Country	Class	Sub Class	Translation Yes/No
	B1						
	B2						

Other Art (Including Author, Title, Date Pertinent Pages, Etc.)

Exam. Init.	Ref. Des.	Citation
	C1	

EXAMINER:	DATE CONSIDERED:

EXAMINER: INITIAL IF REFERENCE CONSIDERED, WHETHER OR NOT CITATION IS IN CONFORMANCE WITH MPEP609; DRAW LINE THROUGH CITATION IF NOT IN CONFORMANCE AND NOT CONSIDERED. INCLUDE COPY OF THIS FORM WITH NEXT COMMUNICATION TO APPLICANT.

Petitioner Microsoft Corporation, Ex. 1002, p. 3163

PTO/SB/06 (12-04)
Approved for use through 7/31/2006. OMB 0651-0032
U.S. Patent and Trademark Office; U.S. DEPARTMENT OF COMMERCE

Under the Paperwork Reduction Act of 1995, no persons are required to respond to a collection of information unless it displays a valid OMB control number.

PATENT APPLICATION FEE DETERMINATION RECORD

Substitute for Form PTO-875

Application or Docket Number: 91399.578

APPLICATION AS FILED – PART I

FOR	(Column 1) NUMBER FILED	(Column 2) NUMBER EXTRA	SMALL ENTITY RATE ($)	SMALL ENTITY FEE ($)	OR	OTHER THAN SMALL ENTITY RATE ($)	OTHER THAN SMALL ENTITY FEE ($)
BASIC FEE (37 CFR 1.16(a), (b), or (c))							
SEARCH FEE (37 CFR 1.16(k), (l), or (m))							
EXAMINATION FEE (37 CFR 1.16(o), (p), or (q))							
TOTAL CLAIMS (37 CFR 1.16(i))	minus 20 =	*	X =		OR	X =	
INDEPENDENT CLAIMS (37 CFR 1.16(h))	minus 3 =	*	X =			X =	
APPLICATION SIZE FEE (37 CFR 1.16(s))	If the specification and drawings exceed 100 sheets of paper, the application size fee due is $250 ($125 for small entity) for each additional 50 sheets or fraction thereof. See 35 U.S.C. 41(a)(1)(G) and 37 CFR 1.16(s).						
MULTIPLE DEPENDENT CLAIM PRESENT (37 CFR 1.16(j))							
* If the difference in column 1 is less than zero, enter "0" in column 2.			TOTAL			TOTAL	

APPLICATION AS AMENDED – PART II

11/17/06

AMENDMENT A	(Column 1) CLAIMS REMAINING AFTER AMENDMENT		(Column 2) HIGHEST NUMBER PREVIOUSLY PAID FOR	(Column 3) PRESENT EXTRA	SMALL ENTITY RATE ($)	SMALL ENTITY ADDITIONAL FEE ($)	OR	OTHER THAN SMALL ENTITY RATE ($)	OTHER THAN SMALL ENTITY ADDITIONAL FEE ($)
Total (37 CFR 1.16(i))	* 995	Minus	** 949	= 46	X =		OR	X =	
Independent (37 CFR 1.16(h))	* 52	Minus	*** 28	= 24	X =		OR	X =	
Application Size Fee (37 CFR 1.16(s))									
FIRST PRESENTATION OF MULTIPLE DEPENDENT CLAIM (37 CFR 1.16(j))							OR		
					TOTAL ADD'L FEE		OR	TOTAL ADD'L FEE	

AMENDMENT B	(Column 1) CLAIMS REMAINING AFTER AMENDMENT		(Column 2) HIGHEST NUMBER PREVIOUSLY PAID FOR	(Column 3) PRESENT EXTRA	RATE ($)	ADDITIONAL FEE ($)	OR	RATE ($)	ADDITIONAL FEE ($)
Total (37 CFR 1.16(i))	*	Minus	**	=	X =		OR	X =	
Independent (37 CFR 1.16(h))	*	Minus	***	=	X =		OR	X =	
Application Size Fee (37 CFR 1.16(s))									
FIRST PRESENTATION OF MULTIPLE DEPENDENT CLAIM (37 CFR 1.16(j))							OR		
					TOTAL ADD'L FEE		OR	TOTAL ADD'L FEE	

* If the entry in column 1 is less than the entry in column 2, write "0" in column 3.
** If the "Highest Number Previously Paid For" IN THIS SPACE is less than 20, enter "20".
*** If the "Highest Number Previously Paid For" IN THIS SPACE is less than 3, enter "3".
The "Highest Number Previously Paid For" (Total or Independent) is the highest number found in the appropriate box in column 1.

This collection of information is required by 37 CFR 1.16. The information is required to obtain or retain a benefit by the public which is to file (and by the USPTO to process) an application. Confidentiality is governed by 35 U.S.C. 122 and 37 CFR 1.14. This collection is estimated to take 12 minutes to complete, including gathering, preparing, and submitting the completed application form to the USPTO. Time will vary depending upon the individual case. Any comments on the amount of time you require to complete this form and/or suggestions for reducing this burden, should be sent to the Chief Information Officer, U.S. Patent and Trademark Office, U.S. Department of Commerce, P.O. Box 1450, Alexandria, VA 22313-1450. DO NOT SEND FEES OR COMPLETED FORMS TO THIS ADDRESS. **SEND TO: Commissioner for Patents, P.O. Box 1450, Alexandria, VA 22313-1450.**

If you need assistance in completing the form, call 1-800-PTO-9199 and select option 2.

OIPE
NOV 17 2006
IAP89
PATENT & TRADEMARK OFFICE

11-20-06

IFW

"Express Mail" mailing label number EV623993717US
I, Peter K. Trzyna (Reg. No. 32, 601), hereby certify that this paper or fee is being deposited with the United States Postal Service "Express Mail Post Office to Addressee" service under 37 CFR 1.10 on the date indicated below and is addressed to MS: Fee Amendment, Commissioner of Patents, P.O. Box 1450, Alexandria, VA 22313-1450, on the date indicated below.

Date: November 17, 2006

Signed: _____
Peter K. Trzyna (Reg. No. 32,601)

PATENT

Paper No.

Our File No. AIS-P99-1

IN THE UNITED STATES PATENT AND TRADEMARK OFFICE

Inventor	:	MARKS, Daniel L.
Serial No.	:	09/399,578
Filed	:	09/20/1999
For	:	GROUP COMMUNICATIONS MULTIPLEXING SYSTEM
Group Art Unit	:	2145
Examiner	:	WINDER, Patrice L.

MS: Fee Amendment
Commissioner of Patents
P.O. Box 1450
Alexandria, VA 22313-1450

TRANSMITTAL LETTER

S I R :

Transmitted herewith for filing in the above-identified patent application is the following:

1. Supplemental Amendment and Response;
2. Specification Pages 2, 6, 7, 15, and 22, with amendments thereon; and
3. Amended Abstract.

APPLICANT CLAIMS LARGE ENTITY STATUS. The Commissioner is hereby authorized to charge any fees associated with the above-identified patent application or credit any overcharges to Deposit Account No. 50-0235.

Please direct all correspondence to the undersigned at the address given below.

Respectfully submitted,

Date: November 17, 2006

Peter K. Trzyna
(Reg. No. 32,601)

P.O. Box 7131
Chicago, IL 60680-7131
(312) 240-0824

Petitioner Microsoft Corporation, Ex. 1002, p. 3166

OIPE
NOV 17 2006
IAP89
PATENT & TRADEMARK OFFICE

"Express Mail" mailing label number EV623993717US
I, Peter K. Trzyna (Reg. No. 32, 601), hereby certify that this paper or fee is being deposited with the United States Postal Service "Express Mail Post Office to Addressee" service under 37 CFR 1.10 on the date indicated below and is addressed to MS: Fee Amendment, Commissioner of Patents, P.O. Box 1450, Alexandria, VA 22313-1450, on the date indicated below.

Date: November 17, 2006

Signed: _____
Peter K. Trzyna (Reg. No. 32,601)

PATENT

Paper No.

Our File No. AIS-P99-1

IN THE UNITED STATES PATENT AND TRADEMARK OFFICE

Inventor	:	MARKS, Daniel L.
Serial No.	:	09/399,578
Filed	:	09/20/1999
For	:	GROUP COMMUNICATIONS MULTIPLEXING SYSTEM
Group Art Unit	:	2145
Examiner	:	WINDER, Patrice L.

MS: Fee Amendment
Commissioner of Patents
P.O. Box 1450
Alexandria, VA 22313-1450

SUPPLEMENTAL AMENDMENT AND RESPONSE

S I R :

In response to the Notice of Non-Complaint Amendment mailed the above-referenced patent application on October 17, 2006, please enter the following amendment and reconsider the application. This filing is to supplement the filing on June 9, 2005. Applicant understands that the Amendments filed September 8, 2005, and October 24, 2005, have not been entered. It is believed that no new matter has been added.

I. AMENDMENT

A. In the specification:

Please amend the specification as set forth below. Pages 2, 6, 7, 15, and 22 of the specification are enclosed herewith showing the amendments below.

Please delete paragraph 4, lines 18-22, on page 2 and replace it with Even more complex is linking computers to communicate in what has become known as a "chat room." Chat room communications can be text, as exemplified by such Internet service providers as America On Line. Multiplexing multimedia is more complex for this electronic environment.

Please delete paragraph 5, lines 23-24, on page 2 and replace it with The Internet was structured for one-way

Please delete paragraph 12, page 6, line 23 through page 7, line 1.

Please delete paragraph 3 on page 7, line 6, and replace it with Fig. 28 is an illustration of a text based interface login/password screen of the present invention.

Please delete lines 3-6 of paragraph 1 on page 15, and insert With regard to the arbitrating of the controller computer 3 is directed by the controller computer program 2 to use "identity tokens", which are pieces of information associated with user identity. The pieces of information are stored in memory in a control computer base, along with personal information about the user, such as the user's age.

Please delete paragraph 1 on page 22, and replace it with DMARKS now wishes to send a graphical multimedia message. This implementation sends graphical multimedia images by allowing a channel member to specify an Internet URL of a graphical multimedia resource to be presented to the group members. In this example, DMARKS wishes to the URL corresponding to the World Wide Web home page of American Information Systems, Inc. to the channel members. DMARKS enters the URL into the response window, and selects "Send URL' from the Moderator pull-down menu (at Fig. 24).

Petitioner Microsoft Corporation, Ex. 1002, p. 3168

B. In the Abstract:

An Amended Abstract is enclosed.

Please delete the Abstract and there insert

A system and method communicating via an Internet network, the system including: a plurality of computers connected to a computer system such that one of the plurality of computers, corresponding to a first of the user identities, and an other of the plurality of computers, corresponding to a second of the user identities, can send communications, and some of the communications are received in real time via the Internet. There can be a determination as to whether some of the communications are allowed.

Petitioner Microsoft Corporation, Ex. 1002, p. 3169

C. In the claims

Please amend the claims as follows:

1. (Currently amended) A method of communicating via ~~using computers to communicate over~~ an Internet network, the method including ~~the steps of~~:

connecting a plurality of ~~participator~~ computers to a computer system, each of the plurality of computers connected to a respective input device and to a respective output device ~~with a controller computer through the Internet network~~;

~~receiving a log in name and a password corresponding to a user identity, respectively from each of said participator computers;~~

~~respectively storing a set of privileges corresponding to each of said user identities, the set including a privilege to receive non-textual communication;~~

determining whether a first of the user identities and a second of the user identities are able to form a group for sending and for receiving communications in real time;

determining ~~which ones of the participator computers can form a group to send and receive communications, said communications respectively are in accordance with the corresponding privilege~~ whether at least one of the first user identity and the second user identity, individually, is censored from data representing at least one of a pointer, video, audio, a graphic, or multimedia; and

if the first and the second user identities are able to form the group, forming the group for sending the communications, and receiving ~~said~~ the communications that are not censored based on the individual user identity, wherein the receiving is in real time and via the Internet network, and not presenting the data that is censored to the corresponding output device ~~in real time over the Internet network between said participator computers in said group, some of said communications of members of the group including a respective video, graphic, graphical multimedia, or pointer-triggered message that is receivable on demand~~.

Petitioner Microsoft Corporation, Ex. 1002, p. 3170

2. (Currently amended) The method of claim 1, wherein the determining whether at least one of the first user identity and the second user identity, individually, is censored from data includes determining whether at least one of the first user identity and the second user identity, individually, is censored from data representing a pointer ~~steps of sending and receiving are carried out with one of said communications comprising said pointer-triggered message~~.

3. (Currently amended) The method of claim 1, wherein the determining whether at least one of the first user identity and the second user identity, individually, is censored from data includes determining whether at least one of the first user identity and the second user identity, individually, is censored from data representing video ~~steps of sending and receiving are carried out with one of said communications comprising said pointer-triggered message and said graphic and further comprising a human communication sound~~.

4. (Currently amended) The method of claim 1, wherein the determining whether at least one of the first user identity and the second user identity, individually, is censored from data includes determining whether at least one of the first user identity and the second user identity, individually, is censored from data representing audio ~~steps of sending and receiving are carried out with one of said communications comprising said pointer-triggered message and said video and said graphic~~.

5. (Currently amended) The method of claim 1, wherein the determining whether at least one of the first user identity and the second user identity, individually, is censored from data includes determining whether at least one of the first user identity and the second user identity, individually, is censored from data representing a graphic ~~steps of sending and receiving are carried out with one of said communications further comprising a human communication~~

Petitioner Microsoft Corporation, Ex. 1002, p. 3171

~~sound~~.

6. (Currently amended) The method of claim 1, wherein the determining whether at least one of the first user identity and the second user identity, individually, is censored from data includes determining whether at least one of the first user identity and the second user identity, individually, is censored from data representing multimedia ~~steps of sending and receiving are carried out with one of said communications comprising said video and further comprising a human communication sound~~.

7. (Currently amended) The method of claim 1, wherein the determining whether at least one of the first user identity and the second user identity, individually, is censored from data includes determining whether at least one of the first user identity and the second user identity, individually, is censored from data representing a pointer and video ~~steps of sending and receiving are carried out with one of said communications comprising said graphic and further comprising a human communication sound~~.

8. (Currently amended) The method of claim 1, wherein the determining whether at least one of the first user identity and the second user identity, individually, is censored from data includes determining whether at least one of the first user identity and the second user identity, individually, is censored from data representing a pointer and audio ~~steps of sending and receiving are carried out with one of said communications comprising said pointer-triggered message and further comprising a human communication sound~~.

9. (Currently amended) The method of claim 1, wherein the determining whether at least one of the first user identity and the second user identity, individually, is censored from

Petitioner Microsoft Corporation, Ex. 1002, p. 3172

data includes determining whether at least one of the first user identity and the second user identity, individually, is censored from data representing a pointer and a graphic ~~steps of sending and receiving are carried out with one of said communications further comprising a human communication sound and text or ascii~~.

10. (Currently amended) The method of claim 1, wherein the determining whether at least one of the first user identity and the second user identity, individually, is censored from data includes determining whether at least one of the first user identity and the second user identity, individually, is censored from data representing video and audio ~~steps of sending and receiving are carried out with one of said communications comprising said video~~.

11. (Currently amended) The method of claim 1, wherein the determining whether at least one of the first user identity and the second user identity, individually, is censored from data includes determining whether at least one of the first user identity and the second user identity, individually, is censored from data representing video and a graphic ~~steps of sending and receiving are carried out with one of said communications comprising said video and said graphic~~.

12. (Currently amended) The method of claim 1, wherein the determining whether at least one of the first user identity and the second user identity, individually, is censored from data includes determining whether at least one of the first user identity and the second user identity, individually, is censored from data representing audio and a graphic ~~steps of sending and receiving are carried out with one of said communications comprising said video and said pointer-triggered message~~.

13. (Currently amended) The method of claim 1, wherein the determining whether

Petitioner Microsoft Corporation, Ex. 1002, p. 3173

at least one of the first user identity and the second user identity, individually, is censored from data includes determining whether at least one of the first user identity and the second user identity, individually, is censored from data representing a pointer and video and audio ~~steps of sending and receiving are carried out with one of said communications comprising said video and further comprising text or ascii~~.

14. (Currently amended) The method of claim 1, wherein the determining whether at least one of the first user identity and the second user identity, individually, is censored from data includes determining whether at least one of the first user identity and the second user identity, individually, is censored from data representing a pointer and video and a graphic ~~steps of sending and receiving are carried out with one of said communications comprising said graphic~~.

15. (Currently amended) The method of claim 1, wherein the determining whether at least one of the first user identity and the second user identity, individually, is censored from data includes determining whether at least one of the first user identity and the second user identity, individually, is censored from data representing a pointer and audio and a graphic ~~steps of sending and receiving are carried out with one of said communications comprising said graphic and said pointer-triggered message~~.

16. (Currently amended) The method of claim 1, wherein the determining whether at least one of the first user identity and the second user identity, individually, is censored from data includes determining whether at least one of the first user identity and the second user identity, individually, is censored from data representing video and audio and a graphic ~~steps of sending and receiving are carried out with one of said communications comprising said graphic and further comprising text or ascii~~.

Petitioner Microsoft Corporation, Ex. 1002, p. 3174

17. (Currently amended) The method of claim 1, wherein the determining whether at least one of the first user identity and the second user identity, individually, is censored from data includes determining whether at least one of the first user identity and the second user identity, individually, is censored from data representing a pointer and video and audio and a graphic ~~steps of sending and receiving are carried out with one of said communications comprising said video and said graphic and further comprising a human communication sound~~.

18. (Currently amended) The method of claim 1, wherein at least some of the communications include at least one of text or ascii ~~the steps of sending and receiving are carried out with one of said communications comprising said video and said pointer-triggered message and further comprising a human communication sound~~.

19. (Currently amended) The method of claim 2 ~~1~~, wherein at least some of the communications include at least one of text or ascii ~~the steps of sending and receiving are carried out with one of said communications comprising and further comprising a human communication sound and text or ascii~~.

20. (Currently amended) The method of claim 3 ~~1~~, wherein at least some of the communications include at least one of text or ascii ~~the steps of sending and receiving are carried out with one of said communications comprising said video and said graphic and said pointer-triggered message and further comprising a human communication sound~~.

21. (Currently amended) The method of claim 4 ~~1~~, wherein at least some of the communications include at least one of text or ascii ~~the steps of sending and receiving are carried~~

Petitioner Microsoft Corporation, Ex. 1002, p. 3175

~~out with one of said communications comprising said video and said pointer-triggered message and further comprising a human communication sound and text or ascii~~.

22. (Currently amended) The method of claim 5 ~~1~~, wherein at least some of the communications include at least one of text or ascii ~~the steps of sending and receiving are carried out with one of said communications comprising said video and said graphic and said pointer-triggered message and further comprising a human communication sound and text or ascii~~.

23. (Currently amended) The method of claim 6 ~~1~~, wherein at least some of the communications include at least one of text or ascii ~~the steps of sending and receiving are carried out with one of said communications further comprising text or ascii~~.

24. (Currently amended) The method of claim 7 ~~1~~, wherein at least some of the communications include at least one of text or ascii ~~the steps of sending and receiving are carried out with one of said communications comprising said graphic and further comprising a human communication sound and text or ascii~~.

25. (Currently amended) The method of claim 8 ~~1~~, wherein at least some of the communications include at least one of text or ascii ~~the steps of sending and receiving are carried out with one of said communications comprising said graphic and said video and further comprising text or ascii~~.

26. (Currently amended) The method of claim 9 ~~1~~, wherein at least some of the communications include at least one of text or ascii ~~the steps of sending and receiving are carried out with one of said communications comprising said pointer-triggered message and further~~

Petitioner Microsoft Corporation, Ex. 1002, p. 3176

~~comprising text or ascii~~.

27. (Currently amended) The method of claim 10, wherein at least some of the communications include at least one of text or ascii ~~the steps of sending and receiving are carried out with one of said communications comprising said pointer-triggered message and said video and further comprising text or ascii~~.

28. (Currently amended) The method of claim 11, wherein at least some of the communications include at least one of text or ascii ~~the steps of sending and receiving are carried out with one of said communications comprising said video and said graphic and further comprising a human communication sound and text or ascii~~.

29. (Currently amended) The method of claim 12, wherein at least some of the communications include at least one of text or ascii ~~the steps of sending and receiving are carried out with one of said communications comprising said pointer-triggered message and further comprising a human communication sound and text or ascii~~.

30. (Currently amended) The method of claim 13, wherein at least some of the communications include at least one of text or ascii ~~the steps of sending and receiving are carried out with one of said communications comprising and said pointer-triggered message and said graphic and further comprising a human communication sound and text or ascii~~.

31. (Currently amended) The method of claim 14, wherein at least some of the communications include at least one of text or ascii ~~the steps of sending and receiving are carried out with one of said communications comprising said video and said graphic and said pointer-~~

Petitioner Microsoft Corporation, Ex. 1002, p. 3177

~~triggered message and further comprising text or ascii~~.

32. (Currently amended) The method of claim 15, wherein at least some of the communications include at least one of text or ascii ~~the steps of sending and receiving are carried out with one of said communications comprising said graphic and said pointer-triggered message and further comprising text or ascii~~.

33. (Currently amended) The method of claim 16 ~~170~~, wherein at least some of the communications include at least one of text or ascii ~~said step of arbitrating is carried out with said pointer-triggered message, and further including the step of arbitrating with the controller computer to determine which of the participator computers can communicate a human communication sound and text or ascii to the other of the participator computers~~.

34. (Currently amended) The method of claim 17 ~~170~~, wherein at least some of the communications include at least one of text or ascii ~~said step of arbitrating is carried out with said pointer-triggered message and said graphic, and further including the step of arbitrating with the controller computer to determine which of the participator computers can communicate test or ascii to the other of the participator computers~~.

35. (Currently amended) The method of claim 1 ~~170~~, further including:

determining whether at least one of the first and the second user identities, individually, is censored from sending in the communications data representing at least one of a pointer, video, a graphic, or multimedia; and

sending the data that is not censored from sending ~~wherein said step of arbitrating is carried out with said video and said graphic, and further including the step of arbitrating with the~~

Petitioner Microsoft Corporation, Ex. 1002, p. 3178

~~controller computer to determine which of the participator computers can communicate a human communication sound and text or ascii to the other of the participator computers~~.

36. (Currently amended) The method of claim 2 ~~170~~, further including:

determining whether at least one of the first and the second user identities, individually, is censored from sending in the communications data representing at least one of a pointer, video, a graphic, or multimedia; and

sending the data that is not censored from sending ~~wherein said step of arbitrating is carried out with said graphic and said pointer-triggered message, and further including the step of arbitrating with the controller computer to determine which of the participator computers can communicate a human communication sound and text or ascii to the other of the participator computers~~.

37. (Currently amended) The method of claim 3 ~~170~~, further including:

determining whether at least one of the first and the second user identities, individually, is censored from sending in the communications data representing at least one of a pointer, video, a graphic, or multimedia; and

sending the data that is not censored from sending ~~wherein said step of arbitrating is carried out with said graphic and said video, and further including the step of arbitrating with the controller computer to determine which of the participator computers can communicate text or ascii to the other of the participator computers~~.

38. (Currently amended) The method of claim 4 ~~170~~, further including:

determining whether at least one of the first and the second user identities, individually, is censored from sending in the communications data representing at least one of a

Petitioner Microsoft Corporation, Ex. 1002, p. 3179

pointer, video, a graphic, or multimedia; and

sending the data that is not censored from sending ~~wherein said step of arbitrating is carried out with said video and said graphic and said pointer-triggered message, and further including the step of arbitrating with the controller computer to determine which of the participator computers can communicate text or ascii to the other of the participator computers~~.

39. (Currently amended) The method of claim 5 ~~170~~, further including:

determining whether at least one of the first and the second user identities, individually, is censored from sending in the communications data representing at least one of a pointer, video, a graphic, or multimedia; and

sending the data that is not censored from sending ~~wherein said step of arbitrating is carried out with said video and said pointer-triggered message, and further including the step of arbitrating with the controller computer to determine which of the participator computers can communicate text or ascii to the other of the participator computers~~.

40. (Currently amended) The method of claim 6 ~~170~~, further including:

determining whether at least one of the first and the second user identities, individually, is censored from sending in the communications data representing at least one of a pointer, video, a graphic, or multimedia; and

sending the data that is not censored from sending ~~wherein said step of arbitrating is carried out with said video and said graphic and said pointer-triggered message~~.

41. (Currently amended) The method of claim 7 ~~170~~, further including:

determining whether at least one of the first and the second user identities, individually, is censored from sending in the communications data representing at least one of a

Petitioner Microsoft Corporation, Ex. 1002, p. 3180

pointer, video, a graphic, or multimedia; and

sending the data that is not censored from sending ~~the step of arbitrating with the controller computer to determine which of the participator computers can communicate a human communication sound~~.

42. (Currently amended) The method of claim 8 ~~170~~, further including:

determining whether at least one of the first and the second user identities, individually, is censored from sending in the communications data representing at least one of a pointer, video, a graphic, or multimedia; and

sending the data that is not censored from sending ~~wherein said step of arbitrating is carried out with said video, and further including the step of arbitrating with the controller computer to determine which of the participator computers can communicate a human communication sound~~.

43. (Currently amended) The method of claim 9 ~~170~~, further including:

determining whether at least one of the first and the second user identities, individually, is censored from sending in the communications data representing at least one of a pointer, video, a graphic, or multimedia; and

sending the data that is not censored from sending ~~wherein said step of arbitrating is carried out with said graphic, and further including the step of arbitrating with the controller computer to determine which of the participator computers can communicate a human communication sound~~.

44. (Currently amended) The method of claim 10 ~~170~~, further including:

determining whether at least one of the first and the second user identities,

Petitioner Microsoft Corporation, Ex. 1002, p. 3181

individually, is censored from sending in the communications data representing at least one of a pointer, video, a graphic, or multimedia; and

sending the data that is not censored from sending ~~wherein said step of arbitrating is carried out with said pointer-triggered message and further including the step of arbitrating with the controller computer to determine which of the participator computers can communicate a human communication sound~~.

45. (Currently amended) The method of claim 11 ~~170~~, further including:

determining whether at least one of the first and the second user identities, individually, is censored from sending in the communications data representing at least one of a pointer, video, a graphic, or multimedia; and

sending the data that is not censored from sending ~~the step of arbitrating with the controller computer to determine which of the participator computers can communicate a human communication sound and text or ascii to the other of the participator computers~~.

46. (Currently amended) The method of claim 12 ~~170~~, further including:

determining whether at least one of the first and the second user identities, individually, is censored from sending in the communications data representing at least one of a pointer, video, a graphic, or multimedia; and

sending the data that is not censored from sending ~~wherein said step of arbitrating is carried out with said video~~.

47. (Currently amended) The method of claim 13 ~~170~~, further including:

determining whether at least one of the first and the second user identities, individually, is censored from sending in the communications data representing at least one of a

Petitioner Microsoft Corporation, Ex. 1002, p. 3182

pointer, video, a graphic, or multimedia; and

sending the data that is not censored from sending ~~wherein said step of arbitrating is carried out with said video and said graphic~~.

48. (Currently amended) The method of claim 14 ~~170~~, further including:

determining whether at least one of the first and the second user identities, individually, is censored from sending in the communications data representing at least one of a pointer, video, a graphic, or multimedia; and

sending the data that is not censored from sending ~~wherein said step of arbitrating is carried out with said video and said pointer-triggered message~~.

49. (Currently amended) The method of claim 15 ~~170~~, further including:

determining whether at least one of the first and the second user identities, individually, is censored from sending in the communications data representing at least one of a pointer, video, a graphic, or multimedia; and

sending the data that is not censored from sending ~~wherein said step of arbitrating is carried out with said video, and further including the step of arbitrating with the controller computer to determine which of the participator computers can communicate text or ascii to the other of the participator computers~~.

50. (Currently amended) The method of claim 16 ~~170~~, further including:

determining whether at least one of the first and the second user identities, individually, is censored from sending in the communications data representing at least one of a pointer, video, a graphic, or multimedia; and

sending the data that is not censored from sending ~~wherein said step of arbitrating~~

Petitioner Microsoft Corporation, Ex. 1002, p. 3183

~~is carried out with said graphic~~.

51. (Currently amended) The method of claim 17 ~~170~~, further including:

determining whether at least one of the first and the second user identities, individually, is censored from sending in the communications data representing at least one of a pointer, video, a graphic, or multimedia; and

sending the data that is not censored from sending ~~wherein said step of arbitrating is carried out with said graphic and said pointer-triggered message~~.

52. (Currently amended) The method of claim 1 ~~170~~, further including determining whether at least one of the communications is censored based on content ~~wherein said step of arbitrating is carried out with said graphic, and further including the step of arbitrating with the controller computer to determine which of the participator computers can communicate text or ascii to the other of the participator computers~~.

53. (Currently amended) The method of claim 2 ~~170~~, further including determining whether at least one of the communications is censored based on content ~~wherein said step of arbitrating is carried out with said video and said graphic, and further including the step of arbitrating with the controller computer to determine which of the participator computers can communicate a human communication sound~~.

54. (Currently amended) The method of claim 3 ~~170~~, further including determining whether at least one of the communications is censored based on content ~~wherein said step of arbitrating is carried out with said video and said pointer-triggered message, and further including the step of arbitrating with the controller computer to determine which of the~~

Petitioner Microsoft Corporation, Ex. 1002, p. 3184

~~participator computers can communicate a human communication sound~~.

55. (Currently amended) The method of claim 4 ~~170~~, further including determining whether at least one of the communications is censored based on content ~~wherein said step of arbitrating is carried out with said video, and further including the step of arbitrating with the controller computer to determine which of the participator computers can communicate a human communication sound and text or ascii to the other of the participator computers~~.

56. (Currently amended) The method of claim 5 ~~170~~, further including determining whether at least one of the communications is censored based on content ~~wherein said step of arbitrating is carried out with said video and said graphic and said pointer-triggered message, and further including the step of arbitrating with the controller computer to determine which of the participator computers can communicate a human communication sound~~.

57. (Currently amended) The method of claim 6 ~~170~~, further including determining whether at least one of the communications is censored based on content ~~wherein said step of arbitrating is carried out with said video and said pointer-triggered message, and further including the step of arbitrating with the controller computer to determine which of the participator computers can communicate a human communication sound and text or ascii to the other of the participator computers~~.

58. (Currently amended) The method of claim 7 ~~170~~, further including determining whether at least one of the communications is censored based on content ~~wherein said step of arbitrating is carried out with said video and said graphic and said pointer-triggered message, and further including the step of arbitrating with the controller computer to determine~~

Petitioner Microsoft Corporation, Ex. 1002, p. 3185

~~which of the participator computers can communicate a human communication sound and text or ascii to the other of the participator computers~~.

59. (Currently amended) The method of claim 8 ~~170~~, further including determining whether at least one of the communications is censored based on content ~~wherein said step of arbitrating is carried out with said graphic and said pointer-triggered message and further comprising a human communication sound~~.

60. (Currently amended) The method of claim 9 ~~170~~, further including determining whether at least one of the communications is censored based on content ~~wherein said step of arbitrating is carried out with said pointer-triggered message, and wherein said step of arbitrating includes arbitrating to determine which of the participator computers can communicate text or ascii to the other of the participator computers~~.

61. (Currently amended) The method of claim 10 ~~170~~, further including determining whether at least one of the communications is censored based on content ~~wherein said step of arbitrating includes arbitrating to determine which of the participator computers can communicate text or ascii to the other of the participator computers~~.

62. (Currently amended) The method of claim 11 ~~170~~, further including determining whether at least one of the communications is censored based on content ~~wherein said step of arbitrating is carried out with said pointer-triggered message~~.

63. (Currently amended) The method of claim 12 ~~170~~, further including determining whether at least one of the communications is censored based on content ~~wherein~~

Petitioner Microsoft Corporation, Ex. 1002, p. 3186

~~said step of arbitrating is carried out with said graphic, and wherein said step of arbitrating includes arbitrating to determine which of the participator computers can communicate a human communication sound and text or ascii to the other of the participator computers~~.

64. (Currently amended) The method of claim 13, further including determining whether at least one of the communications is censored based on content ~~the step of: determining a user's age corresponding to said user identity~~.

65. (Currently amended) The method of claim 14 ~~2~~, further including determining whether at least one of the communications is censored based on content ~~the step of: determining a user's age corresponding to said user identity~~.

66. (Currently amended) The method of claim 15 ~~3~~, further including determining whether at least one of the communications is censored based on content ~~the step of: determining a user's age corresponding to said user identity~~.

67. (Currently amended) The method of claim 16 [~~4~~], further including determining whether at least one of the communications is censored based on content ~~the step of: determining a user's age corresponding to said user identity~~.

68. (Currently amended) The method of claim 17 ~~5~~, further including determining whether at least one of the communications is censored based on content ~~the step of: determining a user's age corresponding to said user identity~~.

69. (Currently amended) The method of claim 52 ~~6~~, further including determining

Petitioner Microsoft Corporation, Ex. 1002, p. 3187

a user age corresponding to each of the user identities ~~the step of:~~

~~determining a user's age corresponding to said user identity~~.

70. (Currently amended) The method of claim 53 ~~7~~, further including determining a user age corresponding to each of the user identities ~~the step of:~~

~~determining a user's age corresponding to said user identity~~.

71. (Currently amended) The method of claim 54 ~~8~~, further including determining a user age corresponding to each of the user identities ~~the step of:~~

~~determining a user's age corresponding to said user identity~~.

72. (Currently amended) The method of claim 55 ~~9~~, further including determining a user age corresponding to each of the user identities ~~the step of:~~

~~determining a user's age corresponding to said user identity~~.

73. (Currently amended) The method of claim 56 ~~10~~, further including determining a user age corresponding to each of the user identities ~~the step of:~~

~~determining a user's age corresponding to said user identity~~.

74. (Currently amended) The method of claim 57 ~~11~~, further including determining a user age corresponding to each of the user identities ~~the step of:~~

~~determining a user's age corresponding to said user identity~~.

75. (Currently amended) The method of claim 1 ~~12~~, wherein the determining whether at least one of the first user identity and the second user identity, individually, is censored

Petitioner Microsoft Corporation, Ex. 1002, p. 3188

from data includes determining whether a parameter corresponding to the first user identity has been determined by an other of the user identities ~~further including the step of:~~

~~determining a user's age corresponding to said user identity~~.

76. (Currently amended) The method of claim 2 ~~13~~, wherein the determining whether at least one of the first user identity and the second user identity, individually, is censored from data includes determining whether a parameter corresponding to the first user identity has been determined by an other of the user identities ~~further including the step of:~~

~~determining a user's age corresponding to said user identity~~.

77. (Currently amended) The method of claim 3 ~~14~~, ~~further including the step of:~~

~~determining a user's age corresponding to said user identity~~.

78. (Currently amended) The method of claim 4 ~~15~~, wherein the determining whether at least one of the first user identity and the second user identity, individually, is censored from data includes determining whether a parameter corresponding to the first user identity has been determined by an other of the user identities ~~further including the step of:~~

~~determining a user's age corresponding to said user identity~~.

79. (Currently amended) The method of claim ~~16, further including the step of:~~

~~determining a user's age corresponding to said user identity~~ 5, wherein the determining whether at least one of the first user identity and the second user identity, individually, is censored from data includes determining whether a parameter corresponding to the first user identity has been determined by an other of the user identities.

Petitioner Microsoft Corporation, Ex. 1002, p. 3189

80. (Currently amended) The method of claim ~~17, further including the step of: determining a user's age corresponding to said user identity~~ 6, wherein the determining whether at least one of the first user identity and the second user identity, individually, is censored from data includes determining whether a parameter corresponding to the first user identity has been determined by an other of the user identities.

81. (Currently amended) The method of claim ~~18, further including the step of: determining a user's age corresponding to said user identity~~ 7, wherein the determining whether at least one of the first user identity and the second user identity, individually, is censored from data includes determining whether a parameter corresponding to the first user identity has been determined by an other of the user identities.

82. (Currently amended) The method of claim ~~19, further including the step of: determining a user's age corresponding to said user identity~~ 8, wherein the determining whether at least one of the first user identity and the second user identity, individually, is censored from data includes determining whether a parameter corresponding to the first user identity has been determined by an other of the user identities.

83. (Currently amended) The method of claim ~~20, further including the step of: determining a user's age corresponding to said user identity~~ 9, wherein the determining whether at least one of the first user identity and the second user identity, individually, is censored from data includes determining whether a parameter corresponding to the first user identity has been determined by an other of the user identities.

84. (Currently amended) The method of claim ~~21, further including the step of:~~

Petitioner Microsoft Corporation, Ex. 1002, p. 3190

~~determining a user's age corresponding to said user identity~~ 10, wherein the determining whether at least one of the first user identity and the second user identity, individually, is censored from data includes determining whether a parameter corresponding to the first user identity has been determined by an other of the user identities.

85. (Currently amended) The method of claim ~~22, further including the step of:~~ ~~determining a user's age corresponding to said user identity~~ 11, wherein the determining whether at least one of the first user identity and the second user identity, individually, is censored from data includes determining whether a parameter corresponding to the first user identity has been determined by an other of the user identities.

86. (Currently amended) The method of claim ~~23, further including the step of:~~ ~~determining a user's age corresponding to said user identity~~ 1, wherein the determining whether the first of the user identities and the second of the user identities are able to form a group includes determining whether the first of the user identities is censored.

87. (Currently amended) The method of claim ~~24, further including the step of:~~ ~~determining a user's age corresponding to said user identity~~ 2, wherein the determining whether the first of the user identities and the second of the user identities are able to form a group includes determining whether the first of the user identities is censored.

88. (Currently amended) The method of claim ~~25, further including the step of:~~ ~~determining a user's age corresponding to said user identity~~ 3, wherein the determining whether the first of the user identities and the second of the user identities are able to form a group includes determining whether the first of the user identities is censored.

Petitioner Microsoft Corporation, Ex. 1002, p. 3191

89. (Currently amended) The method of claim ~~26, further including the step of: determining a user's age corresponding to said user identity~~ 4, wherein the determining whether the first of the user identities and the second of the user identities are able to form a group includes determining whether the first of the user identities is censored.

90. (Currently amended) The method of claim ~~27, further including the step of: determining a user's age corresponding to said user identity~~ 5, wherein the determining whether the first of the user identities and the second of the user identities are able to form a group includes determining whether the first of the user identities is censored.

91. (Currently amended) The method of claim ~~28, further including the step of: determining a user's age corresponding to said user identity~~ 6, wherein the determining whether the first of the user identities and the second of the user identities are able to form a group includes determining whether the first of the user identities is censored.

92. (Currently amended) The method of claim ~~29, further including the step of: determining a user's age corresponding to said user identity~~ 7, wherein the determining whether the first of the user identities and the second of the user identities are able to form a group includes determining whether the first of the user identities is censored.

93. (Currently amended) The method of claim ~~30, further including the step of: determining a user's age corresponding to said user identity~~ 8, wherein the determining whether the first of the user identities and the second of the user identities are able to form a group includes determining whether the first of the user identities is censored.

Petitioner Microsoft Corporation, Ex. 1002, p. 3192

94. (Currently amended) The method of claim ~~31, further including the step of: determining a user's age corresponding to said user identity~~ 9, wherein the determining whether the first of the user identities and the second of the user identities are able to form a group includes determining whether the first of the user identities is censored.

95. (Currently amended) The method of claim ~~32, further including the step of: determining a user's age corresponding to said user identity~~ 10, wherein the determining whether the first of the user identities and the second of the user identities are able to form a group includes determining whether the first of the user identities is censored.

96. (Currently amended) The method of claim ~~33, further including the step of: determining a user's age corresponding to said user identity~~ 11, wherein the determining whether the first of the user identities and the second of the user identities are able to form a group includes determining whether the first of the user identities is censored.

97. (Currently amended) The method of claim ~~34, further including the step of: determining a user's age corresponding to said user identity~~ 12, wherein the determining whether the first of the user identities and the second of the user identities are able to form a group includes determining whether the first of the user identities is censored.

98. (Currently amended) The method of claim ~~35, further including the step of: determining a user's age corresponding to said user identity~~ 13, wherein the determining whether the first of the user identities and the second of the user identities are able to form a group includes determining whether the first of the user identities is censored.

Petitioner Microsoft Corporation, Ex. 1002, p. 3193

99. (Currently amended) The method of claim ~~36, further including the step of: determining a user's age corresponding to said user identity~~ 14, wherein the determining whether the first of the user identities and the second of the user identities are able to form a group includes determining whether the first of the user identities is censored.

100. (Currently amended) The method of claim ~~37, further including the step of: determining a user's age corresponding to said user identity~~ 15, wherein the determining whether the first of the user identities and the second of the user identities are able to form a group includes determining whether the first of the user identities is censored.

101. (Currently amended) The method of claim ~~38, further including the step of: determining a user's age corresponding to said user identity~~ 16, wherein the determining whether the first of the user identities and the second of the user identities are able to form a group includes determining whether the first of the user identities is censored.

102. (Currently amended) The method of claim ~~39, further including the step of: determining a user's age corresponding to said user identity~~ 17, wherein the determining whether the first of the user identities and the second of the user identities are able to form a group includes determining whether the first of the user identities is censored.

103. (Currently amended) The method of claim 1 ~~40~~, further including determining a user age corresponding to each of the user identities. ~~the step of: determining a user's age corresponding to said user identity.~~

Petitioner Microsoft Corporation, Ex. 1002, p. 3194

104. (Currently amended) The method of claim 2 ~~44~~, further including determining a user age corresponding to each of the user identities. ~~the step of:~~

~~determining a user's age corresponding to said user identity.~~

105. (Currently amended) The method of claim 3 ~~42~~, further including determining a user age corresponding to each of the user identities. ~~the step of:~~

~~determining a user's age corresponding to said user identity.~~

106. (Currently amended) The method of claim 4 ~~43~~, further including determining a user age corresponding to each of the user identities. ~~the step of:~~

~~determining a user's age corresponding to said user identity.~~

107. (Currently amended) The method of claim 5 [44], further including determining a user age corresponding to each of the user identities. ~~the step of:~~

~~determining a user's age corresponding to said user identity.~~

108. (Currently amended) The method of claim 6 ~~45~~, further including determining a user age corresponding to each of the user identities. ~~the step of:~~

~~determining a user's age corresponding to said user identity.~~

109. (Currently amended) The method of claim 7 ~~46~~, further including determining a user age corresponding to each of the user identities. ~~the step of:~~

~~determining a user's age corresponding to said user identity.~~

110. (Currently amended) The method of claim 8 ~~47~~, further including determining a

Petitioner Microsoft Corporation, Ex. 1002, p. 3195

user age corresponding to each of the user identities. ~~the step of:~~

~~determining a user's age corresponding to said user identity.~~

111. (Currently amended) The method of claim 9 ~~48~~, further including determining a user age corresponding to each of the user identities. ~~the step of:~~

~~determining a user's age corresponding to said user identity.~~

112. (Currently amended) The method of claim 10 ~~49~~, further including determining a user age corresponding to each of the user identities. ~~the step of:~~

~~determining a user's age corresponding to said user identity.~~

113. (Currently amended) The method of claim 11 ~~50~~, further including determining a user age corresponding to each of the user identities. ~~the step of:~~

~~determining a user's age corresponding to said user identity.~~

114. (Currently amended) The method of claim 12 ~~51~~, further including determining a user age corresponding to each of the user identities. ~~the step of:~~

~~determining a user's age corresponding to said user identity.~~

115. (Currently amended) The method of claim 13 ~~52~~, further including determining a user age corresponding to each of the user identities. ~~the step of:~~

~~determining a user's age corresponding to said user identity.~~

116. (Currently amended) The method of claim 14 ~~53~~, further including determining a user age corresponding to each of the user identities. ~~the step of:~~

Petitioner Microsoft Corporation, Ex. 1002, p. 3196

~~determining a user's age corresponding to said user identity.~~

117. (Currently amended) The method of claim 15 ~~54~~, further including determining a user age corresponding to each of the user identities. ~~the step of:~~

~~determining a user's age corresponding to said user identity.~~

118. (Currently amended) The method of claim 16 ~~55~~, further including determining a user age corresponding to each of the user identities. ~~the step of:~~

~~determining a user's age corresponding to said user identity.~~

119. (Currently amended) The method of claim 17 ~~56~~, further including determining a user age corresponding to each of the user identities. ~~the step of:~~

~~determining a user's age corresponding to said user identity.~~

120. (Currently amended) The method of claim ~~57, further including the step of:~~

~~determining a user's age corresponding to said user identity~~ 1, wherein the data represents a pointer that produces a pointer-triggered message on demand.

121. (Currently amended) The method of claim ~~58, further including the step of:~~

~~determining a user's age corresponding to said user identity~~ 2, wherein the pointer is a pointer that produces a pointer-triggered message on demand.

122. (Currently amended) The method of claim ~~59, further including the step of:~~

~~determining a user's age corresponding to said user identity~~ 7, wherein the pointer is a pointer that produces a pointer-triggered message on demand.

Petitioner Microsoft Corporation, Ex. 1002, p. 3197

123. (Currently amended) The method of claim ~~60, further including the step of: determining a user's age corresponding to said user identity~~ 8, wherein the pointer is a pointer that produces a pointer-triggered message on demand.

124. (Currently amended) The method of claim ~~61, further including the step of: determining a user's age corresponding to said user identity~~ 9, wherein the pointer is a pointer that produces a pointer-triggered message on demand.

125. (Currently amended) The method of claim ~~62, further including the step of: determining a user's age corresponding to said user identity~~ 13, wherein the pointer is a pointer that produces a pointer-triggered message on demand.

126. (Currently amended) The method of claim ~~63, further including the step of: determining a user's age corresponding to said user identity~~ 14, wherein the pointer is a pointer that produces a pointer-triggered message on demand.

127. (Currently amended) The method of claim ~~1, wherein the step of arbitrating includes authorizing a moderator for said communications~~ 15, wherein the pointer is a pointer that produces a pointer-triggered message on demand.

128. (Currently amended) The method of claim ~~2, wherein the step of arbitrating includes authorizing a moderator for said communications~~ 17, wherein the pointer is a pointer that produces a pointer-triggered message on demand.

Petitioner Microsoft Corporation, Ex. 1002, p. 3198

129. (Currently amended) The method of claim ~~3, wherein the step of arbitrating includes authorizing a moderator for said communications~~ 18, wherein the data represents a pointer that produces a pointer-triggered message on demand.

130. (Currently amended) The method of claim [4]~~, wherein the step of arbitrating includes authorizing a moderator for said communications~~ 19, wherein the data represents a pointer that produces a pointer-triggered message on demand.

131. (Currently amended) The method of claim ~~5, wherein the step of arbitrating includes authorizing a moderator for said communications~~ 24, wherein the pointer is a pointer that produces a pointer-triggered message on demand.

132. (Currently amended) The method of claim ~~6, wherein the step of arbitrating includes authorizing a moderator for said communications~~ 25, wherein the pointer is a pointer that produces a pointer-triggered message on demand.

133. (Currently amended) The method of claim ~~7, wherein the step of arbitrating includes authorizing a moderator for said communications~~ 26, wherein the pointer is a pointer that produces a pointer-triggered message on demand.

134. (Currently amended) The method of claim ~~8, wherein the step of arbitrating includes authorizing a moderator for said communications~~ 30, wherein the pointer is a pointer that produces a pointer-triggered message on demand.

135. (Currently amended) The method of claim ~~9, wherein the step of arbitrating~~

Petitioner Microsoft Corporation, Ex. 1002, p. 3199

~~includes authorizing a moderator for said communications~~ 31, wherein the pointer is a pointer that produces a pointer-triggered message on demand.

136. (Currently amended) The method of claim ~~10, wherein the step of arbitrating includes authorizing a moderator for said communications~~ 32, wherein the pointer is a pointer that produces a pointer-triggered message on demand.

137. (previously presented) The method of claim ~~11, wherein the step of arbitrating includes authorizing a moderator for said communications~~ 34, wherein the pointer is a pointer that produces a pointer-triggered message on demand.

138. (Currently amended) The method of claim ~~12, wherein the step of arbitrating includes authorizing a moderator for said communications~~ 35, wherein the data that is censored from sending represents a pointer that produces a pointer-triggered message on demand.

139. (Currently amended) The method of claim ~~13, wherein the step of arbitrating includes authorizing a moderator for said communications~~ 36, wherein the data that is censored from sending represents a pointer that produces a pointer-triggered message on demand.

140. (Currently amended) The method of claim ~~14, wherein the step of arbitrating includes authorizing a moderator for said communications~~ 41, wherein the data that is censored from sending represents a pointer that produces a pointer-triggered message on demand.

141. (Currently amended) The method of claim ~~15, wherein the step of arbitrating includes authorizing a moderator for said communications~~ 42, wherein the data that is censored

Petitioner Microsoft Corporation, Ex. 1002, p. 3200

from sending represents a pointer that produces a pointer-triggered message on demand.

142. (Currently amended) The method of claim ~~16, wherein the step of arbitrating includes authorizing a moderator for said communications~~ 43, wherein the data that is censored from sending represents a pointer that produces a pointer-triggered message on demand.

143. (Currently amended) The method of claim ~~17, wherein the step of arbitrating includes authorizing a moderator for said communications~~ 47, wherein the data that is censored from sending represents a pointer that produces a pointer-triggered message on demand.

144. (Currently amended) The method of claim ~~18, wherein the step of arbitrating includes authorizing a moderator for said communications~~ 48, wherein the data that is censored from sending represents a pointer that produces a pointer-triggered message on demand.

145. (Currently amended) The method of claim ~~19, wherein the step of arbitrating includes authorizing a moderator for said communications~~ 49, wherein the data that is censored from sending represents a pointer that produces a pointer-triggered message on demand.

146. (Currently amended) The method of claim ~~20, wherein the step of arbitrating includes authorizing a moderator for said communications~~ 51, wherein the data that is censored from sending represents a pointer that produces a pointer-triggered message on demand.

147. (Currently amended) The method of claim ~~21, wherein the step of arbitrating includes authorizing a moderator for said communications~~ 52, wherein the data that is censored from sending represents a pointer that produces a pointer-triggered message on demand.

Petitioner Microsoft Corporation, Ex. 1002, p. 3201

148. (Currently amended) The method of claim ~~22, wherein the step of arbitrating includes authorizing a moderator for said communications~~ 53, wherein the data that is censored from sending represents a pointer that produces a pointer-triggered message on demand.

149. (Currently amended) The method of claim ~~23, wherein the step of arbitrating includes authorizing a moderator for said communications~~ 58, wherein the pointer is a pointer that produces a pointer-triggered message on demand.

150. (Currently amended) The method of claim ~~24, wherein the step of arbitrating includes authorizing a moderator for said communications~~ 59, wherein the pointer is a pointer that produces a pointer-triggered message on demand.

151. (Currently amended) The method of claim ~~25, wherein the step of arbitrating includes authorizing a moderator for said communications~~ 60, wherein the pointer is a pointer that produces a pointer-triggered message on demand.

152. (Currently amended) The method of claim ~~26, wherein the step of arbitrating includes authorizing a moderator for said communications~~ 64, wherein the pointer is a pointer that produces a pointer-triggered message on demand.

153. (Currently amended) The method of claim ~~27, wherein the step of arbitrating includes authorizing a moderator for said communications~~ 65, wherein the pointer is a pointer that produces a pointer-triggered message on demand.

Petitioner Microsoft Corporation, Ex. 1002, p. 3202

154. (Currently amended) The method of claim ~~28, wherein the step of arbitrating includes authorizing a moderator for said communications~~ 66, wherein the pointer is a pointer that produces a pointer-triggered message on demand.

155. (Currently amended) The method of claim ~~29, wherein the step of arbitrating includes authorizing a moderator for said communications~~ 68, wherein the pointer is a pointer that produces a pointer-triggered message on demand.

156. (Currently amended) The method of claim ~~30, wherein the step of arbitrating includes authorizing a moderator for said communications~~ 69, wherein the data that is censored from sending represents a pointer that produces a pointer-triggered message on demand.

157. (Currently amended) The method of claim ~~31, wherein the step of arbitrating includes authorizing a moderator for said communications~~ 70, wherein the data that is censored from sending represents a pointer that produces a pointer-triggered message on demand.

158. (Currently amended) The method of claim ~~32, wherein the step of arbitrating includes authorizing a moderator for said communications~~ 75, wherein the data that is censored from sending represents a pointer that produces a pointer-triggered message on demand.

159. (Currently amended) The method of claim ~~170, further including the step of communicating a user image from said one of the plurality of the participator computers to the other of the participator computers~~ 76, wherein the data that is censored from sending represents a pointer that produces a pointer-triggered message on demand.

Petitioner Microsoft Corporation, Ex. 1002, p. 3203

160. (Currently amended) The method of claim ~~41, further including the step of communicating a user image from said one of the plurality of the participator computers to the other of the participator computers~~ 77, wherein the data that is censored from sending represents a pointer that produces a pointer-triggered message on demand.

161. (Currently amended) The method of claim ~~42, further including the step of communicating a user image from said one of the plurality of the participator computers to the other of the participator computers~~ 81, wherein the pointer is a pointer that produces a pointer-triggered message on demand.

162. (Currently amended) The method of claim ~~46, further including the step of communicating a user image from said one of the plurality of the participator computers to the other of the participator computers~~ 82, wherein the pointer is a pointer that produces a pointer-triggered message on demand.

163. (Currently amended) The method of claim ~~61, further including the step of communicating a user image from said one of the plurality of the participator computers to the other of the participator computers~~ 83, wherein the pointer is a pointer that produces a pointer-triggered message on demand.

164. (Currently amended) The method of claim ~~1, further including the step of communicating a user image from one member in the group to another member in the group~~ 85, wherein the data that is censored from sending represents a pointer that produces a pointer-triggered message on demand.

Petitioner Microsoft Corporation, Ex. 1002, p. 3204

165. (Currently amended) A method of ~~using a computer system to distribute communication over~~ operating a system to receive a communication via an Internet network, the method including ~~the steps of~~:

connecting a plurality of ~~participator~~ computers ~~with a controller computer through the Internet~~ to a computer system;

~~receiving an authenticated user identity from a first of the participator computers;~~

~~receiving an authenticated user identity from a second of the participator computers;~~

~~using participator software respectively on the participator computers to enable the communication, including at least one of a video, graphic, sound, or multimedia;~~

~~communicating a message including text or ascii, and a pointer, from the first participator computer to said controller computer and from said controller computer to the second participator computer; and~~

~~using said pointer to receive the communication from the first of the participator computers at the second of the participator computers in real time over the Internet network~~

sending, from each of the plurality of computers, a respective login name and a password corresponding to a respective user identity;

communicating a message comprised of a pointer, from a first of the plurality of computers to the computer system;

communicating the message from the computer system to a second of the plurality of computers; and

receiving via the pointer a communication from the first of the plurality of computers at the second of the plurality of computers, the communication being sent in real time and via the Internet network, the communication including data representing at least one of video, a graphic, sound, or multimedia.

Petitioner Microsoft Corporation, Ex. 1002, p. 3205

166. (Currently amended) The method of claim 86, wherein the data represents a pointer that produces a pointer-triggered message on demand ~~165, further including the step of:~~

~~determining a user's age corresponding to said user identity~~.

167. (Currently amended) The method of claim ~~165, wherein the step of using is carried out with said communication including said video~~ 87, wherein the data represents a pointer that produces a pointer-triggered message on demand.

168. (Currently amended) The method of claim ~~166, wherein the step of using is carried out with said communication including said video~~ 92, wherein the pointer is a pointer that produces a pointer-triggered message on demand.

169. (Currently amended) The method of claim ~~165, further including the step of forming a chat channel over the Internet network, and arbitrating channel communications between said participator computers at said controller computer~~ 93, wherein the pointer is a pointer that produces a pointer-triggered message on demand.

170. (Currently amended) A method of ~~using computers to communicate over an~~ communicating via an Internet network, the method including ~~the steps of~~:

connecting a plurality of computers to a computer system ~~controller computer with a plurality of participator computers, said connecting including connecting at least one of the plurality of participator computers with the controller computer through the Internet network~~;

~~receiving a log in name and a password, respectively from each of said participator computers;~~

~~respectively storing a set of privileges corresponding to each of said user identities,~~

Petitioner Microsoft Corporation, Ex. 1002, p. 3206

~~the set including a privilege to receive non-textual communication; and~~

~~determining which of the participator computers can communicate to an other of the participator computers over the Internet network in real time, in accordance with the corresponding privilege, at least one of a video, a graphic, or a pointer-triggered message that is receivable on demand~~

sending, from each of the plurality of computers, a respective login name and password corresponding to a respective user identity;

determining whether a first of the user identities and a second of the user identities are able to form a group for sending and for receiving communications in real time;

determining whether at least one of the first user identity and the second user identity, individually, is censored from sending data in the communications, the data representing at least one of a pointer, video, audio, a graphic or multimedia; and

if the first and the second user identities are able to form the group, then forming the group, sending the communications that are not censored based on the individual user identity, and receiving the communications, wherein the receiving is in real time and via the Internet network.

171. (Currently amended) The method of claim ~~165, wherein said step of using is carried out with said communication including said sound~~ 94, wherein the pointer is a pointer that produces a pointer-triggered message on demand.

172. (Currently amended) The method of claim ~~165, wherein said step of using is carried out with said communication including said sound and said video~~ 98, wherein the pointer is a pointer that produces a pointer-triggered message on demand.

Petitioner Microsoft Corporation, Ex. 1002, p. 3207

173. (Currently amended) The method of claim ~~166, wherein said step of using is carried out with said communication including said sound~~ 99, wherein the pointer is a pointer that produces a pointer-triggered message on demand.

174. (Currently amended) The method of claim ~~166, wherein said step of using is carried out with said communication including said sound and said video~~ 100, wherein the pointer is a pointer that produces a pointer-triggered message on demand.

175. (Currently amended) The method of claim ~~165, further including the step of sending the communication as an out of band communication~~ 102, wherein the pointer is a pointer that produces a pointer-triggered message on demand.

176. (Currently amended) The method of claim ~~166, further including the step of: communicating an asynchronous communication from said controller computer to one of said participator computers~~ 103, wherein the data represents a pointer that produces a pointer-triggered message on demand.

177. (Currently amended) The method of claim ~~165, further including the step of: communicating an asynchronous communication from said controller computer to one of said participator computers~~ 104, wherein the data represents a pointer that produces a pointer-triggered message on demand.

178. (Currently amended) The method of claim ~~170, further including the step of: communicating an asynchronous communication from said controller computer to one of said participator computers~~ 109, wherein the pointer is a pointer that produces a pointer-triggered

Petitioner Microsoft Corporation, Ex. 1002, p. 3208

message on demand.

179. (Currently amended) The method of claim ~~5, further including the step of: communicating a user image from one member in the group to another member in the group~~ 110, wherein the pointer is a pointer that produces a pointer-triggered message on demand.

180. (Currently amended) The method of claim ~~6, further including the step of: communicating a user image from one member in the group to another member in the group~~ 111, wherein the pointer is a pointer that produces a pointer-triggered message on demand.

181. (Currently amended) The method of claim ~~10, further including the step of: communicating a user image from one member in the group to another member in the group~~ 115, wherein the pointer is a pointer that produces a pointer-triggered message on demand.

182. (Currently amended) The method of claim ~~23, further including the step of: communicating a user image from one member in the group to another member in the group~~ 116, wherein the pointer is a pointer that produces a pointer-triggered message on demand.

183. (Currently amended) The method of claim ~~1, further including the step of: communicating an asynchronous communication from said controller computer to one of said participator computers~~ 117, wherein the pointer is a pointer that produces a pointer-triggered message on demand.

184.(Currently amended) The method of claim ~~1, wherein the step of arbitrating includes censoring responsive to at least one of said user identity, group, and content~~ 119, wherein

Petitioner Microsoft Corporation, Ex. 1002, p. 3209

the pointer is a pointer that produces a pointer-triggered message on demand.

185. (Currently amended) The method of claim ~~2, wherein the step of arbitrating includes censoring responsive to at least one of said user identity, group, and content~~ 1, wherein receiving the communications includes causing presentation of some of the communications by one of the plurality of computers in the group.

186. (Currently amended) The method of claim ~~3, wherein the step of arbitrating includes censoring responsive to at least one of said user identity, group, and content~~ 1, further including, when the data is censored, not receiving the communications that are censored based on the individual user identity, and not presenting the data that is censored to the corresponding output device.

187. (Currently amended) The method of claim [4]~~, wherein the step of arbitrating includes censoring responsive to at least one of said user identity, group, and content~~ 1, wherein the computer system is comprised of an Internet service provider computer system.

188. (Currently amended) The method of claim ~~5, wherein the step of arbitrating includes censoring responsive to at least one of said user identity, group, and content~~ 1, further including:

_____ storing, for the first user identity, an authorization associated with presentation of graphical multimedia; and

_____ based on the authorization, presenting the graphical multimedia at the output device corresponding to the second user identity.

Petitioner Microsoft Corporation, Ex. 1002, p. 3210

189. (Currently amended) The method of claim ~~6, wherein the step of arbitrating includes censoring responsive to at least one of said user identity, group, and content~~ 1, further including:

providing the first user identity with access to a member-associated image corresponding to the second user identity.

190. (Currently amended) The method of claim ~~7, wherein the step of arbitrating includes censoring responsive to at least one of said user identity, group, and content~~ 1, further including:

determining whether the first user identity is censored from access to a member-associated image corresponding to the second user identity;

if the first user identity is censored, not allowing access to the member-associated image; and

if the first user identity is not censored, allowing access to the member-associated image.

191. (Currently amended) The method of claim ~~8, wherein the step of arbitrating includes censoring responsive to at least one of said user identity, group, and content~~ 170, wherein the determining whether at least one of the first user identity and the second user identity, individually, is censored from sending data includes wherein the determining whether at least one of the first user identity and the second user identity, individually, is censored from sending data representing a pointer.

192. (Currently amended) The method of claim ~~9, wherein the step of arbitrating includes censoring responsive to at least one of said user identity, group, and content~~ 170, wherein

Petitioner Microsoft Corporation, Ex. 1002, p. 3211

the determining whether at least one of the first user identity and the second user identity, individually, is censored from sending data includes wherein the determining whether at least one of the first user identity and the second user identity, individually, is censored from sending data representing video.

193. (Currently amended) The method of claim ~~10, wherein the step of arbitrating includes censoring responsive to at least one of said user identity, group, and content~~ 170, wherein the determining whether at least one of the first user identity and the second user identity, individually, is censored from sending data includes wherein the determining whether at least one of the first user identity and the second user identity, individually, is censored from sending data representing audio.

194. (Currently amended) The method of claim ~~11, wherein the step of arbitrating includes censoring responsive to at least one of said user identity, group, and content~~ 170, wherein the determining whether at least one of the first user identity and the second user identity, individually, is censored from sending data includes wherein the determining whether at least one of the first user identity and the second user identity, individually, is censored from sending data representing a graphic.

195. (Currently amended) The method of claim ~~12, wherein the step of arbitrating includes censoring responsive to at least one of said user identity, group, and content~~ 170, wherein the determining whether at least one of the first user identity and the second user identity, individually, is censored from sending data includes wherein the determining whether at least one of the first user identity and the second user identity, individually, is censored from sending data representing multimedia.

Petitioner Microsoft Corporation, Ex. 1002, p. 3212

196. (Currently amended) The method of claim ~~13, wherein the step of arbitrating includes censoring responsive to at least one of said user identity, group, and content~~ 170, wherein the determining whether at least one of the first user identity and the second user identity, individually, is censored from sending data includes wherein the determining whether at least one of the first user identity and the second user identity, individually, is censored from sending data representing a pointer and video.

197. (Currently amended) The method of claim ~~14, wherein the step of arbitrating includes censoring responsive to at least one of said user identity, group, and content~~ 170, wherein the determining whether at least one of the first user identity and the second user identity, individually, is censored from sending data includes wherein the determining whether at least one of the first user identity and the second user identity, individually, is censored from sending data representing a pointer and audio.

198. (Currently amended) The method of claim ~~15, wherein the step of arbitrating includes censoring responsive to at least one of said user identity, group, and content~~ 170, wherein the determining whether at least one of the first user identity and the second user identity, individually, is censored from sending data includes wherein the determining whether at least one of the first user identity and the second user identity, individually, is censored from sending data representing a pointer and a graphic.

199. (Currently amended) The method of claim ~~16, wherein the step of arbitrating includes censoring responsive to at least one of said user identity, group, and content~~ 170, wherein the determining whether at least one of the first user identity and the second user identity,

Petitioner Microsoft Corporation, Ex. 1002, p. 3213

individually, is censored from sending data includes wherein the determining whether at least one of the first user identity and the second user identity, individually, is censored from sending data representing video and audio.

200. (Currently amended) The method of claim ~~17, wherein the step of arbitrating includes censoring responsive to at least one of said user identity, group, and content~~ 170, wherein the determining whether at least one of the first user identity and the second user identity, individually, is censored from sending data includes wherein the determining whether at least one of the first user identity and the second user identity, individually, is censored from sending data representing video and a graphic.

201. (Currently amended) The method of claim ~~18, wherein the step of arbitrating includes censoring responsive to at least one of said user identity, group, and content~~ 170, wherein the determining whether at least one of the first user identity and the second user identity, individually, is censored from sending data includes wherein the determining whether at least one of the first user identity and the second user identity, individually, is censored from sending data representing audio and a graphic.

202. (Currently amended) The method of claim ~~19, wherein the step of arbitrating includes censoring responsive to at least one of said user identity, group, and content~~ 170, wherein the determining whether at least one of the first user identity and the second user identity, individually, is censored from sending data includes wherein the determining whether at least one of the first user identity and the second user identity, individually, is censored from sending data representing a pointer and video and audio.

Petitioner Microsoft Corporation, Ex. 1002, p. 3214

203. (Currently amended) The method of claim ~~20, wherein the step of arbitrating includes censoring responsive to at least one of said user identity, group, and content~~ 170, wherein the determining whether at least one of the first user identity and the second user identity, individually, is censored from sending data includes wherein the determining whether at least one of the first user identity and the second user identity, individually, is censored from sending data representing a pointer and video and a graphic.

204. (Currently amended) The method of claim ~~21, wherein the step of arbitrating includes censoring responsive to at least one of said user identity, group, and content~~ 170, wherein the determining whether at least one of the first user identity and the second user identity, individually, is censored from sending data includes wherein the determining whether at least one of the first user identity and the second user identity, individually, is censored from sending data representing a pointer and audio and a graphic.

205. (Currently amended) The method of claim ~~22, wherein the step of arbitrating includes censoring responsive to at least one of said user identity, group, and content~~ 170, wherein the determining whether at least one of the first user identity and the second user identity, individually, is censored from sending data includes wherein the determining whether at least one of the first user identity and the second user identity, individually, is censored from sending data representing video and audio and a graphic.

206. (Currently amended) The method of claim ~~23, wherein the step of arbitrating includes censoring responsive to at least one of said user identity, group, and content~~ 170, wherein the determining whether at least one of the first user identity and the second user identity, individually, is censored from sending data includes wherein the determining whether at least one

Petitioner Microsoft Corporation, Ex. 1002, p. 3215

of the first user identity and the second user identity, individually, is censored from sending data representing a pointer and video and audio and a graphic.

207. (Currently amended) The method of claim ~~24, wherein the step of arbitrating includes censoring responsive to at least one of said user identity, group, and content~~ 170, wherein at least some of the communications include at least one of text or ascii.

208. (Currently amended) The method of claim ~~25, wherein the step of arbitrating includes censoring responsive to at least one of said user identity, group, and content~~ 191, wherein at least some of the communications include at least one of text or ascii.

209. (Currently amended) The method of claim ~~26, wherein the step of arbitrating includes censoring responsive to at least one of said user identity, group, and content~~ 192, wherein at least some of the communications include at least one of text or ascii.

210. (Currently amended) The method of claim ~~27, wherein the step of arbitrating includes censoring responsive to at least one of said user identity, group, and content~~ 193, wherein at least some of the communications include at least one of text or ascii.

211. (Currently amended) The method of claim ~~28, wherein the step of arbitrating includes censoring responsive to at least one of said user identity, group, and content~~ 194, wherein at least some of the communications include at least one of text or ascii.

212. (Currently amended) The method of claim ~~29, wherein the step of arbitrating includes censoring responsive to at least one of said user identity, group, and content~~ 195, wherein

Petitioner Microsoft Corporation, Ex. 1002, p. 3216

at least some of the communications include at least one of text or ascii.

213. (Currently amended) The method of claim ~~30, wherein the step of arbitrating includes censoring responsive to at least one of said user identity, group, and content~~ 196, wherein at least some of the communications include at least one of text or ascii.

214. (Currently amended) The method of claim ~~31, wherein the step of arbitrating includes censoring responsive to at least one of said user identity, group, and content~~ 197, wherein at least some of the communications include at least one of text or ascii.

215. (Currently amended) The method of claim ~~32, wherein the step of arbitrating includes censoring responsive to at least one of said user identity, group, and content~~ 198, wherein at least some of the communications include at least one of text or ascii.

216. (Currently amended) The method of claim ~~1, wherein the step of arbitrating includes:~~

~~authorizing, with said controller computer, invisible viewing of some of the communications~~ 199, wherein at least some of the communications include at least one of text or ascii.

217. (Currently amended) The method of claim ~~2, wherein the step of arbitrating includes:~~

~~authorizing, with said controller computer, invisible viewing of some of the communications~~ 200, wherein at least some of the communications include at least one of text or ascii.

Petitioner Microsoft Corporation, Ex. 1002, p. 3217

218. (Currently amended) The method of claim ~~3, wherein the step of arbitrating includes:~~

~~authorizing, with said controller computer, invisible viewing of some of the communications~~ 201, wherein at least some of the communications include at least one of text or ascii.

219. (Currently amended) The method of claim [4]~~, wherein the step of arbitrating includes:~~

~~authorizing, with said controller computer, invisible viewing of some of the communications~~ 202, wherein at least some of the communications include at least one of text or ascii.

220. (Currently amended) The method of claim ~~5, wherein the step of arbitrating includes:~~

~~authorizing, with said controller computer, invisible viewing of some of the communications~~ 203, wherein at least some of the communications include at least one of text or ascii.

221. (Currently amended) The method of claim ~~6, wherein the step of arbitrating includes:~~

~~authorizing, with said controller computer, invisible viewing of some of the communications~~ 204, wherein at least some of the communications include at least one of text or ascii.

Petitioner Microsoft Corporation, Ex. 1002, p. 3218

222. (Currently amended) The method of claim ~~7, wherein the step of arbitrating includes:~~

~~authorizing, with said controller computer, invisible viewing of some of the communications~~ 205, wherein at least some of the communications include at least one of text or ascii.

223. (Currently amended) The method of claim ~~8, wherein the step of arbitrating includes:~~

~~authorizing, with said controller computer, invisible viewing of some of the communications~~ 206, wherein at least some of the communications include at least one of text or ascii.

224. (Currently amended) The method of claim ~~9, wherein the step of arbitrating includes:~~

~~authorizing, with said controller computer, invisible viewing of some of the communications~~ 170, further including determining whether at least one of the communications is censored based on content.

225. (Currently amended) The method of claim ~~10, wherein the step of arbitrating includes:~~

~~authorizing, with said controller computer, invisible viewing of some of the communications~~ 191, further including determining whether at least one of the communications is censored based on content.

226. (Currently amended) The method of claim ~~11, wherein the step of arbitrating~~

Petitioner Microsoft Corporation, Ex. 1002, p. 3219

~~includes:~~

~~authorizing, with said controller computer, invisible viewing of some of the communications~~ 192, further including determining whether at least one of the communications is censored based on content.

227. (Currently amended) The method of claim ~~12, wherein the step of arbitrating includes:~~

~~authorizing, with said controller computer, invisible viewing of some of the communications~~ 193, further including determining whether at least one of the communications is censored based on content.

228. (Currently amended) The method of claim ~~13, wherein the step of arbitrating includes:~~

~~authorizing, with said controller computer, invisible viewing of some of the communications~~ 194, further including determining whether at least one of the communications is censored based on content.

229. (Currently amended) The method of claim ~~14, wherein the step of arbitrating includes:~~

~~authorizing, with said controller computer, invisible viewing of some of the communications~~ 195, further including determining whether at least one of the communications is censored based on content.

230. (Currently amended) The method of claim ~~15, wherein the step of arbitrating includes:~~

Petitioner Microsoft Corporation, Ex. 1002, p. 3220

~~authorizing, with said controller computer, invisible viewing of some of the communications~~ 196, further including determining whether at least one of the communications is censored based on content.

231. (Currently amended) The method of claim ~~16, wherein the step of arbitrating includes:~~

~~authorizing, with said controller computer, invisible viewing of some of the communications~~ 197, further including determining whether at least one of the communications is censored based on content.

232. (Currently amended) The method of claim ~~17, wherein the step of arbitrating includes:~~

~~authorizing, with said controller computer, invisible viewing of some of the communications~~ 198, further including determining whether at least one of the communications is censored based on content.

233. (Currently amended) The method of claim ~~18, wherein the step of arbitrating includes:~~

~~authorizing, with said controller computer, invisible viewing of some of the communications~~ 199, further including determining whether at least one of the communications is censored based on content.

234. (Currently amended) The method of claim ~~19, wherein the step of arbitrating includes:~~

~~authorizing, with said controller computer, invisible viewing of some of the~~

Petitioner Microsoft Corporation, Ex. 1002, p. 3221

~~communications~~ 200, further including determining whether at least one of the communications is censored based on content.

235. (Currently amended) The method of claim ~~20, wherein the step of arbitrating includes:~~

~~authorizing, with said controller computer, invisible viewing of some of the communications~~ 201, further including determining whether at least one of the communications is censored based on content.

236. (Currently amended) The method of claim ~~21, wherein the step of arbitrating includes:~~

~~authorizing, with said controller computer, invisible viewing of some of the communications~~ 202, further including determining whether at least one of the communications is censored based on content.

237. (Currently amended) The method of claim ~~22, wherein the step of arbitrating includes:~~

~~authorizing, with said controller computer, invisible viewing of some of the communications~~ 203, further including determining whether at least one of the communications is censored based on content.

238. (Currently amended) The method of claim ~~23, wherein the step of arbitrating includes:~~

~~authorizing, with said controller computer, invisible viewing of some of the communications~~ 204, further including determining whether at least one of the communications is

Petitioner Microsoft Corporation, Ex. 1002, p. 3222

censored based on content.

239. (Currently amended) The method of claim ~~24, wherein the step of arbitrating includes:~~

~~authorizing, with said controller computer, invisible viewing of some of the communications~~ 205, further including determining whether at least one of the communications is censored based on content.

240. (Currently amended) The method of claim ~~25, wherein the step of arbitrating includes:~~

~~authorizing, with said controller computer, invisible viewing of some of the communications~~ 206, further including determining whether at least one of the communications is censored based on content

241. (Currently amended) The method of claim ~~26, wherein the step of arbitrating includes:~~

~~authorizing, with said controller computer, invisible viewing of some of the communications~~ 170, wherein the determining whether the first user identity and the second user identity are able to form a group includes determining whether the first of the user identities is censored.

242. (Currently amended) The method of claim ~~27, wherein the step of arbitrating includes:~~

~~authorizing, with said controller computer, invisible viewing of some of the communications~~ 191, wherein the determining whether the first user identity and the second user

Petitioner Microsoft Corporation, Ex. 1002, p. 3223

identity are able to form a group includes determining whether the first of the user identities is censored.

243. (Currently amended) The method of claim ~~28, wherein the step of arbitrating includes:~~

~~authorizing, with said controller computer, invisible viewing of some of the communications~~ 192, wherein the determining whether the first user identity and the second user identity are able to form a group includes determining whether the first of the user identities is censored.

244. (Currently amended) The method of claim ~~29, wherein the step of arbitrating includes:~~

~~authorizing, with said controller computer, invisible viewing of some of the communications~~ 193, wherein the determining whether the first user identity and the second user identity are able to form a group includes determining whether the first of the user identities is censored.

245. (Currently amended) The method of claim ~~30, wherein the step of arbitrating includes:~~

~~authorizing, with said controller computer, invisible viewing of some of the communications~~ 194, wherein the determining whether the first user identity and the second user identity are able to form a group includes determining whether the first of the user identities is censored.

246. (Currently amended) The method of claim ~~31, wherein the step of arbitrating~~

Petitioner Microsoft Corporation, Ex. 1002, p. 3224

~~includes:~~

~~authorizing, with said controller computer, invisible viewing of some of the communications~~ 195, wherein the determining whether the first user identity and the second user identity are able to form a group includes determining whether the first of the user identities is censored.

247. (Currently amended) The method of claim ~~32, wherein the step of arbitrating includes:~~

~~authorizing, with said controller computer, invisible viewing of some of the communications~~ 196, wherein the determining whether the first user identity and the second user identity are able to form a group includes determining whether the first of the user identities is censored.

248. (Currently amended) The method of claim ~~1, wherein the step of arbitrating includes:~~

~~providing private, real time communication over the Internet network, with said controller computer, between some of the group~~ 197, wherein the determining whether the first user identity and the second user identity are able to form a group includes determining whether the first of the user identities is censored.

249. (Currently amended) The method of claim ~~2, wherein the step of arbitrating includes:~~

~~providing private, real time communication over the Internet network, with said controller computer, between some of the group~~ 198, wherein the determining whether the first user identity and the second user identity are able to form a group includes determining whether

Petitioner Microsoft Corporation, Ex. 1002, p. 3225

the first of the user identities is censored.

250. (Currently amended) The method of claim ~~3, wherein the step of arbitrating includes:~~

~~providing private, real time communication over the Internet network, with said controller computer, between some of the group~~ 199, wherein the determining whether the first user identity and the second user identity are able to form a group includes determining whether the first of the user identities is censored.

251. (Currently amended) The method of claim ~~4, wherein the step of arbitrating includes:~~

~~providing private, real time communication over the Internet network, with said controller computer, between some of the group~~ 200, wherein the determining whether the first user identity and the second user identity are able to form a group includes determining whether the first of the user identities is censored.

252. (Currently amended) The method of claim ~~5, wherein the step of arbitrating includes:~~

~~providing private, real time communication over the Internet network, with said controller computer, between some of the group~~ 201, wherein the determining whether the first user identity and the second user identity are able to form a group includes determining whether the first of the user identities is censored.

253. (Currently amended) The method of claim ~~6, wherein the step of arbitrating includes:~~

Petitioner Microsoft Corporation, Ex. 1002, p. 3226

~~providing private, real time communication over the Internet network, with said controller computer, between some of the group~~ 202, wherein the determining whether the first user identity and the second user identity are able to form a group includes determining whether the first of the user identities is censored.

254. (Currently amended) The method of claim ~~7, wherein the step of arbitrating includes:~~

~~providing private, real time communication over the Internet network, with said controller computer, between some of the group~~ 203, wherein the determining whether the first user identity and the second user identity are able to form a group includes determining whether the first of the user identities is censored.

255. (Currently amended) The method of claim ~~8, wherein the step of arbitrating includes:~~

~~providing private, real time communication over the Internet network, with said controller computer, between some of the group~~ 204, wherein the determining whether the first user identity and the second user identity are able to form a group includes determining whether the first of the user identities is censored.

256. (Currently amended) The method of claim ~~9, wherein the step of arbitrating includes:~~

~~providing private, real time communication over the Internet network, with said controller computer, between some of the group~~ 205, wherein the determining whether the first user identity and the second user identity are able to form a group includes determining whether the first of the user identities is censored.

Petitioner Microsoft Corporation, Ex. 1002, p. 3227

257. (Currently amended) The method of claim ~~10, wherein the step of arbitrating includes:~~

~~providing private, real time communication over the Internet network, with said controller computer, between some of the group~~ 206, wherein the determining whether the first user identity and the second user identity are able to form a group includes determining whether the first of the user identities is censored.

258. (Currently amended) The method of claim ~~11, wherein the step of arbitrating includes:~~

~~providing private, real time communication over the Internet network, with said controller computer, between some of the group~~ 170, further including determining a user age corresponding to each of the user identities.

259. (Currently amended) The method of claim ~~12, wherein the step of arbitrating includes:~~

~~providing private, real time communication over the Internet network, with said controller computer, between some of the group~~ 191, further including determining a user age corresponding to each of the user identities.

260. (Currently amended) The method of claim ~~13, wherein the step of arbitrating includes:~~

~~providing private, real time communication over the Internet network, with said controller computer, between some of the group~~ 192, further including determining a user age corresponding to each of the user identities.

Petitioner Microsoft Corporation, Ex. 1002, p. 3228

261. (Currently amended) The method of claim ~~14, wherein the step of arbitrating includes:~~

~~providing private, real time communication over the Internet network, with said controller computer, between some of the group~~ 193, further including determining a user age corresponding to each of the user identities.

262. (Currently amended) The method of claim ~~15, wherein the step of arbitrating includes:~~

~~providing private, real time communication over the Internet network, with said controller computer, between some of the group~~ 194, further including determining a user age corresponding to each of the user identities.

263. (Currently amended) The method of claim ~~16, wherein the step of arbitrating includes:~~

~~providing private, real time communication over the Internet network, with said controller computer, between some of the group~~ 195, further including determining a user age corresponding to each of the user identities.

264. (Currently amended) The method of claim ~~17, wherein the step of arbitrating includes:~~

~~providing private, real time communication over the Internet network, with said controller computer, between some of the group~~ 196, further including determining a user age corresponding to each of the user identities.

Petitioner Microsoft Corporation, Ex. 1002, p. 3229

265. (Currently amended) The method of claim ~~18, wherein the step of arbitrating includes:~~

~~providing private, real time communication over the Internet network, with said controller computer, between some of the group~~ 197, further including determining a user age corresponding to each of the user identities.

266. (Currently amended) The method of claim ~~19, wherein the step of arbitrating includes:~~

~~providing private, real time communication over the Internet network, with said controller computer, between some of the group~~ 198, further including determining a user age corresponding to each of the user identities.

267. (Currently amended) The method of claim ~~20, wherein the step of arbitrating includes:~~

~~providing private, real time communication over the Internet network, with said controller computer, between some of the group~~ 199, further including determining a user age corresponding to each of the user identities.

268. (Currently amended) The method of claim ~~21, wherein the step of arbitrating includes:~~

~~providing private, real time communication over the Internet network, with said controller computer, between some of the group~~ 200, further including determining a user age corresponding to each of the user identities.

269. (Currently amended) The method of claim ~~22, wherein the step of arbitrating~~

Petitioner Microsoft Corporation, Ex. 1002, p. 3230

~~includes:~~

~~providing private, real time communication over the Internet network, with said controller computer, between some of the group~~ 201, further including determining a user age corresponding to each of the user identities.

270. (Currently amended) The method of claim ~~23, wherein the step of arbitrating includes:~~

~~providing private, real time communication over the Internet network, with said controller computer, between some of the group~~ 202, further including determining a user age corresponding to each of the user identities.

271. (Currently amended) The method of claim ~~24, wherein the step of arbitrating includes:~~

~~providing private, real time communication over the Internet network, with said controller computer, between some of the group~~ 203, further including determining a user age corresponding to each of the user identities.

272. (Currently amended) The method of claim ~~25, wherein the step of arbitrating includes:~~

~~providing private, real time communication over the Internet network, with said controller computer, between some of the group~~ 204, further including determining a user age corresponding to each of the user identities.

273. (Currently amended) The method of claim ~~26, wherein the step of arbitrating includes:~~

Petitioner Microsoft Corporation, Ex. 1002, p. 3231

~~providing private, real time communication over the Internet network, with said controller computer, between some of the group~~ 205, further including determining a user age corresponding to each of the user identities.

274. (Currently amended) The method of claim ~~27, wherein the step of arbitrating includes:~~

~~providing private, real time communication over the Internet network, with said controller computer, between some of the group~~ 206, further including determining a user age corresponding to each of the user identities.

275. (Currently amended) The method of claim ~~28, wherein the step of arbitrating includes:~~

~~providing private, real time communication over the Internet network, with said controller computer, between some of the group~~ 170, wherein at least one of the communications includes data representing a human communication of sound.

276. (Currently amended) The method of claim ~~29, wherein the step of arbitrating includes:~~

~~providing private, real time communication over the Internet network, with said controller computer, between some of the group~~ 191, wherein at least one of the communications includes data representing a human communication of sound.

277. (Currently amended) The method of claim ~~30, wherein the step of arbitrating includes:~~

~~providing private, real time communication over the Internet network, with said~~

Petitioner Microsoft Corporation, Ex. 1002, p. 3232

~~controller computer, between some of the group~~ 192, wherein at least one of the communications includes data representing a human communication of sound.

278. (Currently amended) The method of claim ~~31, wherein the step of arbitrating includes:~~

~~providing private, real time communication over the Internet network, with said controller computer, between some of the group~~ 193, wherein at least one of the communications includes data representing a human communication of sound.

279. (Currently amended) The method of claim ~~32, wherein the step of arbitrating includes:~~

~~providing private, real time communication over the Internet network, with said controller computer, between some of the group~~ 194, wherein at least one of the communications includes data representing a human communication of sound.

280. (Currently amended) The method of claim ~~170, further including the step of:~~

~~determining a user's age corresponding to said user identity~~ 195, wherein at least one of the communications includes data representing a human communication of sound.

281. (Currently amended) The method of claim ~~170, wherein the step of arbitrating includes authorizing a moderator for group communications including communications between the one of the plurality of computers and the other of the plurality of computers~~ 196, wherein at least one of the communications includes data representing a human communication of sound.

Petitioner Microsoft Corporation, Ex. 1002, p. 3233

282. (Currently amended) The method of claim ~~170, wherein the step of arbitrating includes censoring responsive to at least one of said user identity, group, and content~~ 197, wherein at least one of the communications includes data representing a human communication of sound.

283. (Currently amended) The method of claim ~~170, wherein the step of arbitrating includes:~~

~~authorizing, with said controller computer, invisible viewing of some of the communications~~ 198, wherein at least one of the communications includes data representing a human communication of sound.

284. (Currently amended) The method of claim ~~170, further including the step of:~~

~~providing group communications capability, with said controller computer, to handle communications between the one of the plurality of computers and the other of the plurality of computers, said group communications capability including private communication window capability~~ 199, wherein at least one of the communications includes data representing a human communication of sound.

285. (Currently amended) The method of claim ~~33, wherein the step of arbitrating includes authorizing a moderator for group communications including communications between the one of the plurality of computers and the other of the plurality of computers~~ 200, wherein at least one of the communications includes data representing a human communication of sound.

286. (Currently amended) The method of claim ~~34, wherein the step of arbitrating includes authorizing a moderator for group communications including communications between the one of the plurality of computers and the other of the plurality of computers~~ 201, wherein at least

Petitioner Microsoft Corporation, Ex. 1002, p. 3234

one of the communications includes data representing a human communication of sound.

287. (Currently amended) The method of claim ~~35, wherein the step of arbitrating includes authorizing a moderator for group communications including communications between the one of the plurality of computers and the other of the plurality of computers~~ 202, wherein at least one of the communications includes data representing a human communication of sound.

288. (Currently amended) The method of claim ~~36, wherein the step of arbitrating includes authorizing a moderator for group communications including communications between the one of the plurality of computers and the other of the plurality of computers~~ 203, wherein at least one of the communications includes data representing a human communication of sound.

289. (Currently amended) The method of claim ~~37, wherein the step of arbitrating includes authorizing a moderator for group communications including communications between the one of the plurality of computers and the other of the plurality of computers~~ 204, wherein at least one of the communications includes data representing a human communication of sound.

290. (Currently amended) The method of claim ~~38, wherein the step of arbitrating includes authorizing a moderator for group communications including communications between the one of the plurality of computers and the other of the plurality of computers~~ 205, wherein at least one of the communications includes data representing a human communication of sound.

291. (Currently amended) The method of claim ~~39, wherein the step of arbitrating includes authorizing a moderator for group communications including communications between the one of the plurality of computers and the other of the plurality of computers~~ 206, wherein at least

Petitioner Microsoft Corporation, Ex. 1002, p. 3235

one of the communications includes data representing a human communication of sound.

292. (Currently amended) The method of claim [40], ~~wherein the step of arbitrating includes authorizing a moderator for group communications including communications between the one of the plurality of computers and the other of the plurality of computers~~ 170, wherein at least one of the communications includes at least one of text or ascii.

293. (Currently amended) The method of claim [41], ~~wherein the step of arbitrating includes authorizing a moderator for group communications including communications between the one of the plurality of computers and the other of the plurality of computers~~ 191, wherein at least one of the communications includes at least one of text or ascii.

294. (Currently amended) The method of claim [42], ~~wherein the step of arbitrating includes authorizing a moderator for group communications including communications between the one of the plurality of computers and the other of the plurality of computers~~ 192, wherein at least one of the communications includes at least one of text or ascii.

295. (Currently amended) The method of claim [43], ~~wherein the step of arbitrating includes authorizing a moderator for group communications including communications between the one of the plurality of computers and the other of the plurality of computers~~ 193, wherein at least one of the communications includes at least one of text or ascii.

296. (Currently amended) The method of claim [44], ~~wherein the step of arbitrating includes authorizing a moderator for group communications including communications between the one of the plurality of computers and the other of the plurality of computers~~ 194,

Petitioner Microsoft Corporation, Ex. 1002, p. 3236

wherein at least one of the communications includes at least one of text or ascii.

297. (Currently amended) The method of claim [45]~~, wherein the step of arbitrating includes authorizing a moderator for group communications including communications between the one of the plurality of computers and the other of the plurality of computers~~ 195, wherein at least one of the communications includes at least one of text or ascii.

298. (Currently amended) The method of claim [46]~~, wherein the step of arbitrating includes authorizing a moderator for group communications including communications between the one of the plurality of computers and the other of the plurality of computers~~ 196, wherein at least one of the communications includes at least one of text or ascii.

299. (Currently amended) The method of claim [47]~~, wherein the step of arbitrating includes authorizing a moderator for group communications including communications between the one of the plurality of computers and the other of the plurality of computers~~ 197, wherein at least one of the communications includes at least one of text or ascii.

300. (Currently amended) The method of claim [48]~~, wherein the step of arbitrating includes authorizing a moderator for group communications including communications between the one of the plurality of computers and the other of the plurality of computers~~ 198, wherein at least one of the communications includes at least one of text or ascii.

301. (Currently amended) The method of claim [49]~~, wherein the step of arbitrating includes authorizing a moderator for group communications including communications between the one of the plurality of computers and the other of the plurality of computers~~ 199,

Petitioner Microsoft Corporation, Ex. 1002, p. 3237

wherein at least one of the communications includes at least one of text or ascii.

302. (Currently amended) The method of claim ~~50, wherein the step of arbitrating includes authorizing a moderator for group communications including communications between the one of the plurality of computers and the other of the plurality of computers~~ 200, wherein at least one of the communications includes at least one of text or ascii.

303. (Currently amended) The method of claim ~~51, wherein the step of arbitrating includes authorizing a moderator for group communications including communications between the one of the plurality of computers and the other of the plurality of computers~~ 201, wherein at least one of the communications includes at least one of text or ascii.

304. (Currently amended) The method of claim ~~52, wherein the step of arbitrating includes authorizing a moderator for group communications including communications between the one of the plurality of computers and the other of the plurality of computers~~ 202, wherein at least one of the communications includes at least one of text or ascii.

305. (Currently amended) The method of claim ~~53, wherein the step of arbitrating includes authorizing a moderator for group communications including communications between the one of the plurality of computers and the other of the plurality of computers~~ 203, wherein at least one of the communications includes at least one of text or ascii.

306. (Currently amended) The method of claim ~~54, wherein the step of arbitrating includes authorizing a moderator for group communications including communications between the one of the plurality of computers and the other of the plurality of computers~~ 204, wherein at least

Petitioner Microsoft Corporation, Ex. 1002, p. 3238

one of the communications includes at least one of text or ascii.

307. (Currently amended) The method of claim ~~55, wherein the step of arbitrating includes authorizing a moderator for group communications including communications between the one of the plurality of computers and the other of the plurality of computers~~ 205, wherein at least one of the communications includes at least one of text or ascii.

308. (Currently amended) The method of claim ~~56, wherein the step of arbitrating includes authorizing a moderator for group communications including communications between the one of the plurality of computers and the other of the plurality of computers~~ 206, wherein at least one of the communications includes at least one of text or ascii.

309. (Currently amended) The method of claim ~~57, wherein the step of arbitrating includes authorizing a moderator for group communications including communications between the one of the plurality of computers and the other of the plurality of computers~~ 170, wherein the computer system is comprised of an Internet service provider computer system.

310. (Currently amended) The method of claim ~~58, wherein the step of arbitrating includes authorizing a moderator for group communications including communications between the one of the plurality of computers and the other of the plurality of computers~~ 170, further including:

storing, for the first user identity, an authorization associated with presentation of graphical multimedia; and

based on the authorization, presenting the graphical multimedia at the output device corresponding to the second user identity.

Petitioner Microsoft Corporation, Ex. 1002, p. 3239

311. (Currently amended) The method of claim ~~59, wherein the step of arbitrating includes authorizing a moderator for group communications including communications between the one of the plurality of computers and the other of the plurality of computers~~ 170, further including:

providing the first user identity with access to a member-associated image corresponding to the second user identity.

312. (Currently amended) The method of claim ~~60, wherein the step of arbitrating includes authorizing a moderator for group communications including communications between the one of the plurality of computers and the other of the plurality of computers~~ 170, further including:

determining whether the first user identity is censored from access to a member-associated image corresponding to the second user identity;

if the first user identity is censored, not allowing access to the member-associated image; and

if the first user identity is not censored, allowing access to the member-associated image.

313. (Currently amended) The method of claim ~~61, wherein the step of arbitrating includes authorizing a moderator for group communications including communications between the one of the plurality of computers and the other of the plurality of computers~~ 170, wherein the data represents a pointer that a pointer-triggered message on demand.

314. (Currently amended) The method of claim ~~62, wherein the step of arbitrating includes authorizing a moderator for group communications including communications between the one of the plurality of computers and the other of the plurality of computers~~ 191, wherein the pointer is a pointer that produces a pointer-triggered message on demand.

Petitioner Microsoft Corporation, Ex. 1002, p. 3240

315. (Currently amended) The method of claim ~~63, wherein the step of arbitrating includes authorizing a moderator for group communications including communications between the one of the plurality of computers and the other of the plurality of computers~~ 196, wherein the pointer is a pointer that produces a pointer-triggered message on demand.

316. (Currently amended) The method of claim ~~33, wherein the step of arbitrating includes censoring responsive to at least one of said user identity, group, and content~~ 197, wherein the pointer is a pointer that produces a pointer-triggered message on demand.

317. (Currently amended) The method of claim ~~34, wherein the step of arbitrating includes censoring responsive to at least one of said user identity, group, and content~~ 198, wherein the pointer is a pointer that produces a pointer-triggered message on demand.

318. (Currently amended) The method of claim ~~35, wherein the step of arbitrating includes censoring responsive to at least one of said user identity, group, and content~~ 202, wherein the pointer is a pointer that produces a pointer-triggered message on demand.

319. (Currently amended) The method of claim ~~36, wherein the step of arbitrating includes censoring responsive to at least one of said user identity, group, and content~~ 203, wherein the pointer is a pointer that produces a pointer-triggered message on demand.

320. (Currently amended) The method of claim ~~37, wherein the step of arbitrating includes censoring responsive to at least one of said user identity, group, and content~~ 204, wherein the pointer is a pointer that produces a pointer-triggered message on demand.

Petitioner Microsoft Corporation, Ex. 1002, p. 3241

321. (Currently amended) The method of claim ~~38, wherein the step of arbitrating includes censoring responsive to at least one of said user identity, group, and content~~ 206, wherein the pointer is a pointer that produces a pointer-triggered message on demand.

322. (Currently amended) The method of claim ~~39, wherein the step of arbitrating includes censoring responsive to at least one of said user identity, group, and content~~ 207, wherein the data represents a pointer that a pointer-triggered message on demand.

323. (Currently amended) The method of claim [40]~~, wherein the step of arbitrating includes censoring responsive to at least one of said user identity, group, and content~~ 208, wherein the pointer is a pointer that produces a pointer-triggered message on demand.

324. (Currently amended) The method of claim [41]~~, wherein the step of arbitrating includes censoring responsive to at least one of said user identity, group, and content~~ 213, wherein the pointer is a pointer that produces a pointer-triggered message on demand.

325. (Currently amended) The method of claim [42]~~, wherein the step of arbitrating includes censoring responsive to at least one of said user identity, group, and content~~ 214, wherein the pointer is a pointer that produces a pointer-triggered message on demand.

326. (Currently amended) The method of claim [43]~~, wherein the step of arbitrating includes censoring responsive to at least one of said user identity, group, and content~~ 215, wherein the pointer is a pointer that produces a pointer-triggered message on demand.

Petitioner Microsoft Corporation, Ex. 1002, p. 3242

327. (Currently amended) The method of claim [44], ~~wherein the step of arbitrating includes censoring responsive to at least one of said user identity, group, and content~~ 219, wherein the pointer is a pointer that produces a pointer-triggered message on demand.

328. (Currently amended) The method of claim [45], ~~wherein the step of arbitrating includes censoring responsive to at least one of said user identity, group, and content~~ 220, wherein the pointer is a pointer that produces a pointer-triggered message on demand.

329. (Currently amended) The method of claim [46], ~~wherein the step of arbitrating includes censoring responsive to at least one of said user identity, group, and content~~ 221, wherein the pointer is a pointer that produces a pointer-triggered message on demand.

330. (Currently amended) The method of claim [47], ~~wherein the step of arbitrating includes censoring responsive to at least one of said user identity, group, and content~~ 223, wherein the pointer is a pointer that produces a pointer-triggered message on demand.

331. (Currently amended) The method of claim [48], ~~wherein the step of arbitrating includes censoring responsive to at least one of said user identity, group, and content~~ 224, wherein the data represents a pointer that a pointer-triggered message on demand.

332. (Currently amended) The method of claim [49], ~~wherein the step of arbitrating includes censoring responsive to at least one of said user identity, group, and content~~ 225, wherein the pointer is a pointer that produces a pointer-triggered message on demand.

333. (Currently amended) The method of claim ~~50, wherein the step of arbitrating~~

Petitioner Microsoft Corporation, Ex. 1002, p. 3243

~~includes censoring responsive to at least one of said user identity, group, and content~~ 230, wherein the pointer is a pointer that produces a pointer-triggered message on demand.

334. (Currently amended) The method of claim ~~51, wherein the step of arbitrating includes censoring responsive to at least one of said user identity, group, and content~~ 231, wherein the pointer is a pointer that produces a pointer-triggered message on demand.

335. (Currently amended) The method of claim ~~52, wherein the step of arbitrating includes censoring responsive to at least one of said user identity, group, and content~~ 232, wherein the pointer is a pointer that produces a pointer-triggered message on demand.

336. (Currently amended) The method of claim ~~53, wherein the step of arbitrating includes censoring responsive to at least one of said user identity, group, and content~~ 236, wherein the pointer is a pointer that produces a pointer-triggered message on demand.

337. (Currently amended) The method of claim ~~54, wherein the step of arbitrating includes censoring responsive to at least one of said user identity, group, and content~~ 237, wherein the pointer is a pointer that produces a pointer-triggered message on demand.

338. (Currently amended) The method of claim ~~55, wherein the step of arbitrating includes censoring responsive to at least one of said user identity, group, and content~~ 238, wherein the pointer is a pointer that produces a pointer-triggered message on demand.

339. (Currently amended) The method of claim ~~56, wherein the step of arbitrating includes censoring responsive to at least one of said user identity, group, and content~~ 240, wherein

Petitioner Microsoft Corporation, Ex. 1002, p. 3244

the pointer is a pointer that produces a pointer-triggered message on demand.

340. (Currently amended) The method of claim ~~57, wherein the step of arbitrating includes censoring responsive to at least one of said user identity, group, and content~~ 241, wherein the pointer is a pointer that produces a pointer-triggered message on demand.

341. (Currently amended) The method of claim ~~58, wherein the step of arbitrating includes censoring responsive to at least one of said user identity, group, and content~~ 242, wherein the pointer is a pointer that produces a pointer-triggered message on demand.

342. (Currently amended) The method of claim ~~59, wherein the step of arbitrating includes censoring responsive to at least one of said user identity, group, and content~~ 247, wherein the pointer is a pointer that produces a pointer-triggered message on demand.

343. (Currently amended) The method of claim ~~60, wherein the step of arbitrating includes censoring responsive to at least one of said user identity, group, and content~~ 248, wherein the pointer is a pointer that produces a pointer-triggered message on demand.

344. (Currently amended) The method of claim ~~61, wherein the step of arbitrating includes censoring responsive to at least one of said user identity, group, and content~~ 249, wherein the pointer is a pointer that produces a pointer-triggered message on demand.

345. (Currently amended) The method of claim ~~62, wherein the step of arbitrating includes censoring responsive to at least one of said user identity, group, and content~~ 253, wherein the pointer is a pointer that produces a pointer-triggered message on demand.

Petitioner Microsoft Corporation, Ex. 1002, p. 3245

346. (Currently amended) The method of claim ~~63, wherein the step of arbitrating includes censoring responsive to at least one of said user identity, group, and content~~ 254, wherein the pointer is a pointer that produces a pointer-triggered message on demand.

347. (Currently amended) The method of claim ~~33, wherein the step of arbitrating includes:~~

~~authorizing, with said controller computer, invisible viewing of some of the communications~~ 255, wherein the pointer is a pointer that produces a pointer-triggered message on demand.

348. (Currently amended) The method of claim ~~34, wherein the step of arbitrating includes:~~

~~authorizing, with said controller computer, invisible viewing of some of the communications~~ 257, wherein the pointer is a pointer that produces a pointer-triggered message on demand.

349. (Currently amended) The method of claim ~~35, wherein the step of arbitrating includes:~~

~~authorizing, with said controller computer, invisible viewing of some of the communications~~ 258, wherein the data represents a pointer that produces a pointer-triggered message on demand.

350. (Currently amended) The method of claim ~~36, wherein the step of arbitrating includes:~~

Petitioner Microsoft Corporation, Ex. 1002, p. 3246

~~authorizing, with said controller computer, invisible viewing of some of the communications~~ 259, wherein the pointer is a pointer that produces a pointer-triggered message on demand.

351. (Currently amended) The method of claim ~~37, wherein the step of arbitrating includes:~~

~~authorizing, with said controller computer, invisible viewing of some of the communications~~ 264, wherein the pointer is a pointer that produces a pointer-triggered message on demand.

352. (Currently amended) The method of claim ~~38, wherein the step of arbitrating includes:~~

~~authorizing, with said controller computer, invisible viewing of some of the communications~~ 265, wherein the pointer is a pointer that produces a pointer-triggered message on demand.

353. (Currently amended) The method of claim ~~39, wherein the step of arbitrating includes:~~

~~authorizing, with said controller computer, invisible viewing of some of the communications~~ 266, wherein the pointer is a pointer that produces a pointer-triggered message on demand.

354. (Currently amended) The method of claim [40]~~, wherein the step of arbitrating includes:~~

~~authorizing, with said controller computer, invisible viewing of some of the~~

Petitioner Microsoft Corporation, Ex. 1002, p. 3247

~~communications~~ 270, wherein the pointer is a pointer that produces a pointer-triggered message on demand.

355. (Currently amended) The method of claim [41], ~~wherein the step of arbitrating includes:~~

~~authorizing, with said controller computer, invisible viewing of some of the communications~~ 271, wherein the pointer is a pointer that produces a pointer-triggered message on demand.

356. (Currently amended) The method of claim [42], ~~wherein the step of arbitrating includes:~~

~~authorizing, with said controller computer, invisible viewing of some of the communications~~ 272, wherein the pointer is a pointer that produces a pointer-triggered message on demand.

357. (Currently amended) The method of claim [43], ~~wherein the step of arbitrating includes:~~

~~authorizing, with said controller computer, invisible viewing of some of the communications~~ 274, wherein the pointer is a pointer that produces a pointer-triggered message on demand.

358. (Currently amended) The method of claim [44], ~~wherein the step of arbitrating includes:~~

~~authorizing, with said controller computer, invisible viewing of some of the communications~~ 275, wherein the data represents a pointer that produces a pointer-triggered

Petitioner Microsoft Corporation, Ex. 1002, p. 3248

message on demand.

359. (Currently amended) The method of claim [45], ~~wherein the step of arbitrating includes:~~

~~authorizing, with said controller computer, invisible viewing of some of the communications~~ 276, wherein the pointer is a pointer that produces a pointer-triggered message on demand.

360. (Currently amended) The method of claim [46], ~~wherein the step of arbitrating includes:~~

~~authorizing, with said controller computer, invisible viewing of some of the communications~~ 281, wherein the pointer is a pointer that produces a pointer-triggered message on demand.

361. (Currently amended) The method of claim [47], ~~wherein the step of arbitrating includes:~~

~~authorizing, with said controller computer, invisible viewing of some of the communications~~ 282, wherein the pointer is a pointer that produces a pointer-triggered message on demand.

362. (Currently amended) The method of claim [48], ~~wherein the step of arbitrating includes:~~

~~authorizing, with said controller computer, invisible viewing of some of the communications~~ 283, wherein the pointer is a pointer that produces a pointer-triggered message on demand.

Petitioner Microsoft Corporation, Ex. 1002, p. 3249

363. (Currently amended) The method of claim [49]~~, wherein the step of arbitrating includes:~~

~~authorizing, with said controller computer, invisible viewing of some of the communications~~ 287, wherein the pointer is a pointer that produces a pointer-triggered message on demand.

364. (Currently amended) The method of claim ~~50, wherein the step of arbitrating includes:~~

~~authorizing, with said controller computer, invisible viewing of some of the communications~~ 288, wherein the pointer is a pointer that produces a pointer-triggered message on demand.

365. (Currently amended) The method of claim ~~51, wherein the step of arbitrating includes:~~

~~authorizing, with said controller computer, invisible viewing of some of the communications~~ 289, wherein the pointer is a pointer that produces a pointer-triggered message on demand.

366. (Currently amended) The method of claim ~~52, wherein the step of arbitrating includes:~~

~~authorizing, with said controller computer, invisible viewing of some of the communications~~ 291, wherein the pointer is a pointer that produces a pointer-triggered message on demand.

Petitioner Microsoft Corporation, Ex. 1002, p. 3250

367. (Currently amended) The method of claim ~~53, wherein the step of arbitrating includes:~~

~~authorizing, with said controller computer, invisible viewing of some of the communications~~ 292, wherein the data represents a pointer that produces a pointer-triggered message on demand.

368. (Currently amended) The method of claim ~~54, wherein the step of arbitrating includes:~~

~~authorizing, with said controller computer, invisible viewing of some of the communications~~ 293, wherein the pointer is a pointer that produces a pointer-triggered message on demand.

369. (Currently amended) The method of claim ~~55, wherein the step of arbitrating includes:~~

~~authorizing, with said controller computer, invisible viewing of some of the communications~~ 298, wherein the pointer is a pointer that produces a pointer-triggered message on demand.

370. (Currently amended) The method of claim ~~56, wherein the step of arbitrating includes:~~

~~authorizing, with said controller computer, invisible viewing of some of the communications~~ 299, wherein the pointer is a pointer that produces a pointer-triggered message on demand.

371. (Currently amended) The method of claim ~~57, wherein the step of arbitrating~~

Petitioner Microsoft Corporation, Ex. 1002, p. 3251

~~includes:~~

~~authorizing, with said controller computer, invisible viewing of some of the communications~~ 300, wherein the pointer is a pointer that produces a pointer-triggered message on demand.

372. (Currently amended) The method of claim ~~58, wherein the step of arbitrating includes:~~

~~authorizing, with said controller computer, invisible viewing of some of the communications~~ 304, wherein the pointer is a pointer that produces a pointer-triggered message on demand.

373. (Currently amended) The method of claim ~~59, wherein the step of arbitrating includes:~~

~~authorizing, with said controller computer, invisible viewing of some of the communications~~ 305, wherein the pointer is a pointer that produces a pointer-triggered message on demand.

374. (Currently amended) The method of claim ~~60, wherein the step of arbitrating includes:~~

~~authorizing, with said controller computer, invisible viewing of some of the communications~~ 306, wherein the pointer is a pointer that produces a pointer-triggered message on demand.

375. (Currently amended) The method of claim ~~61, wherein the step of arbitrating includes:~~

Petitioner Microsoft Corporation, Ex. 1002, p. 3252

~~authorizing, with said controller computer, invisible viewing of some of the communications~~ 308, wherein the pointer is a pointer that produces a pointer-triggered message on demand.

376. (Currently amended) The method of claim ~~62, wherein the step of arbitrating includes:~~

~~authorizing, with said controller computer, invisible viewing of some of the communications~~ 309, wherein the data represents a pointer that produces a pointer-triggered message on demand.

377. (Currently amended) The method of claim ~~63, wherein the step of arbitrating includes:~~

~~authorizing, with said controller computer, invisible viewing of some of the communications~~ 310, wherein the data represents a pointer that produces a pointer-triggered message on demand.

378. (Currently amended) The method of claim ~~33, further including the step of:~~

~~providing group communications capability, with said controller computer, to handle communications between the one of the plurality of computers and the other of the plurality of computers, said group communications capability including private communication window capability~~ 311, wherein the data represents a pointer that produces a pointer-triggered message on demand.

379. (Currently amended) The method of claim ~~34, further including the step of:~~

~~providing group communications capability, with said controller computer, to handle~~

Petitioner Microsoft Corporation, Ex. 1002, p. 3253

~~communications between the one of the plurality of computers and the other of the plurality of computers, said group communications capability including private communication window capability~~ 312, wherein the data represents a pointer that produces a pointer-triggered message on demand.

380. (Currently amended) The system ~~method~~ of claim ~~35, further including the step of:~~

~~providing group communications capability, with said controller computer, to handle communications between the one of the plurality of computers and the other of the plurality of computers, said group communications capability including private communication window capability~~ 435, wherein the data represents a pointer.

381. (Currently amended) The system ~~method~~ of claim ~~36, further including the step of:~~

~~providing group communications capability, with said controller computer, to handle communications between the one of the plurality of computers and the other of the plurality of computers, said group communications capability including private communication window capability~~ 435, wherein the data represents video.

382. (Currently amended) The system ~~method~~ of claim ~~37, further including the step of:~~

~~providing group communications capability, with said controller computer, to handle communications between the one of the plurality of computers and the other of the plurality of computers, said group communications capability including private communication window capability~~ 435, wherein the data represents audio.

Petitioner Microsoft Corporation, Ex. 1002, p. 3254

383. (Currently amended) The ~~method of claim 38, further including the step of: providing group communications capability, with said controller computer, to handle communications between the one of the plurality of computers and the other of the plurality of computers, said group communications capability including private communication window capability~~ system of claim 435, wherein the data represents a graphic.

384. (Currently amended) The ~~method of claim 39, further including the step of: providing group communications capability, with said controller computer, to handle communications between the one of the plurality of computers and the other of the plurality of computers, said group communications capability including private communication window capability~~ system of claim 435, wherein the data represents multimedia.

385. (Currently amended) The ~~method of claim 40, further including the step of: providing group communications capability, with said controller computer, to handle communications between the one of the plurality of computers and the other of the plurality of computers, said group communications capability including private communication window capability~~ system of claim 435, wherein the data represents a pointer and video.

386. (Currently amended) The ~~method of claim 41, further including the step of: providing group communications capability, with said controller computer, to handle communications between the one of the plurality of computers and the other of the plurality of computers, said group communications capability including private communication window capability~~ system of claim 435, wherein the data represents a pointer and audio.

Petitioner Microsoft Corporation, Ex. 1002, p. 3255

387. (Currently amended) The ~~method of claim 42, further including the step of: providing group communications capability, with said controller computer, to handle communications between the one of the plurality of computers and the other of the plurality of computers, said group communications capability including private communication window capability~~ system of claim 435, wherein the data represents a pointer and a graphic.

388. (Currently amended) The ~~method of claim 43, further including the step of: providing group communications capability, with said controller computer, to handle communications between the one of the plurality of computers and the other of the plurality of computers, said group communications capability including private communication window capability~~ system of claim 435, wherein the data represents video and audio.

389. (Currently amended) The ~~method of claim 44, further including the step of: providing group communications capability, with said controller computer, to handle communications between the one of the plurality of computers and the other of the plurality of computers, said group communications capability including private communication window capability~~ system of claim 435, wherein the data represents video and a graphic.

390. (Currently amended) The ~~method of claim 45, further including the step of: providing group communications capability, with said controller computer, to handle communications between the one of the plurality of computers and the other of the plurality of computers, said group communications capability including private communication window capability~~ system of claim 435, wherein the data represents audio and a graphic.

391. (Currently amended) The ~~method of claim 46, further including the step of:~~

Petitioner Microsoft Corporation, Ex. 1002, p. 3256

~~providing group communications capability, with said controller computer, to handle communications between the one of the plurality of computers and the other of the plurality of computers, said group communications capability including private communication window capability~~ system of claim 435, wherein the data represents a pointer and video and audio.

392. (Currently amended) The ~~method of claim 47, further including the step of:~~

~~providing group communications capability, with said controller computer, to handle communications between the one of the plurality of computers and the other of the plurality of computers, said group communications capability including private communication window capability~~ system of claim 435, wherein the data represents a pointer and video and a graphic.

393. (Currently amended) The ~~method of claim 48, further including the step of:~~

~~providing group communications capability, with said controller computer, to handle communications between the one of the plurality of computers and the other of the plurality of computers, said group communications capability including private communication window capability~~ system of claim 435, wherein the data represents a pointer and audio and a graphic.

394. (Currently amended) The ~~method of claim 49, further including the step of:~~

~~providing group communications capability, with said controller computer, to handle communications between the one of the plurality of computers and the other of the plurality of computers, said group communications capability including private communication window capability~~ system of claim 435, wherein the data represents video and audio and a graphic.

395. (Currently amended) The ~~method of claim 50, further including the step of:~~

Petitioner Microsoft Corporation, Ex. 1002, p. 3257

~~providing group communications capability, with said controller computer, to handle communications between the one of the plurality of computers and the other of the plurality of computers, said group communications capability including private communication window capability~~ system of claim 435, wherein the data represents a pointer and video and audio and a graphic.

396. (Currently amended) The ~~method of claim 51, further including the step of:~~ ~~providing group communications capability, with said controller computer, to handle communications between the one of the plurality of computers and the other of the plurality of computers, said group communications capability including private communication window capability~~ system of claim 435, wherein the computer system is further programmed to determine whether at least one of the communications is censored based on content.

397. (Currently amended) The ~~method of claim 52, further including the step of:~~ ~~providing group communications capability, with said controller computer, to handle communications between the one of the plurality of computers and the other of the plurality of computers, said group communications capability including private communication window capability~~ system of claim 380, wherein the computer system is further programmed to determine whether at least one of the communications is censored based on content.

398. (Currently amended) The ~~method of claim 53, further including the step of:~~ ~~providing group communications capability, with said controller computer, to handle communications between the one of the plurality of computers and the other of the plurality of computers, said group communications capability including private communication window capability~~ system of claim 381, wherein the computer system is further programmed to determine

Petitioner Microsoft Corporation, Ex. 1002, p. 3258

whether at least one of the communications is censored based on content.

399. (Currently amended) The ~~method of claim 54, further including the step of: providing group communications capability, with said controller computer, to handle communications between the one of the plurality of computers and the other of the plurality of computers, said group communications capability including private communication window capability~~ system of claim 382, wherein the computer system is further programmed to determine whether at least one of the communications is censored based on content.

400. (Currently amended) The ~~method of claim 55, further including the step of: providing group communications capability, with said controller computer, to handle communications between the one of the plurality of computers and the other of the plurality of computers, said group communications capability including private communication window capability~~ system of claim 383, wherein the computer system is further programmed to determine whether at least one of the communications is censored based on content.

401. (Currently amended) The ~~method of claim 56, further including the step of: providing group communications capability, with said controller computer, to handle communications between the one of the plurality of computers and the other of the plurality of computers, said group communications capability including private communication window capability~~ system of claim 384, wherein the computer system is further programmed to determine whether at least one of the communications is censored based on content.

402. (Currently amended) The ~~method of claim 57, further including the step of: providing group communications capability, with said controller computer, to handle~~

Petitioner Microsoft Corporation, Ex. 1002, p. 3259

~~communications between the one of the plurality of computers and the other of the plurality of computers, said group communications capability including private communication window capability~~ system of claim 385, wherein the computer system is further programmed to determine whether at least one of the communications is censored based on content.

403. (Currently amended) The ~~method of claim 58, further including the step of: providing group communications capability, with said controller computer, to handle communications between the one of the plurality of computers and the other of the plurality of computers, said group communications capability including private communication window capability~~ system of claim 386, wherein the computer system is further programmed to determine whether at least one of the communications is censored based on content.

404. (Currently amended) The ~~method of claim 59, further including the step of: providing group communications capability, with said controller computer, to handle communications between the one of the plurality of computers and the other of the plurality of computers, said group communications capability including private communication window capability~~ system of claim 387, wherein the computer system is further programmed to determine whether at least one of the communications is censored based on content.

405. (Currently amended) The ~~method of claim 60, further including the step of: providing group communications capability, with said controller computer, to handle communications between the one of the plurality of computers and the other of the plurality of computers, said group communications capability including private communication window capability~~ system of claim 388, wherein the computer system is further programmed to determine whether at least one of the communications is censored based on content.

Petitioner Microsoft Corporation, Ex. 1002, p. 3260

406. (Currently amended) The ~~method of claim 61, further including the step of: providing group communications capability, with said controller computer, to handle communications between the one of the plurality of computers and the other of the plurality of computers, said group communications capability including private communication window capability~~ system of claim 389, wherein the computer system is further programmed to determine whether at least one of the communications is censored based on content.

407. (Currently amended) The ~~method of claim 62, further including the step of: providing group communications capability, with said controller computer, to handle communications between the one of the plurality of computers and the other of the plurality of computers, said group communications capability including private communication window capability~~ system of claim 390, wherein the computer system is further programmed to determine whether at least one of the communications is censored based on content.

408. (Currently amended) The ~~method of claim 63, further including the step of: providing group communications capability, with said controller computer, to handle communications between the one of the plurality of computers and the other of the plurality of computers, said group communications capability including private communication window capability~~ system of claim 391, wherein the computer system is further programmed to determine whether at least one of the communications is censored based on content.

409. (Currently amended) A method of communicating via ~~of using a computer system to communicate over~~ an Internet network, the method including ~~the steps of~~:

connecting a plurality of ~~participator~~ computers ~~with a controller computer through~~

Petitioner Microsoft Corporation, Ex. 1002, p. 3261

~~the Internet network~~ to a computer system via the Internet network;

~~respectively storing a log in name and a password corresponding to each of a plurality of user identities;~~

~~receiving one said log in name and one said password, respectively from each of said participator computers;~~

~~determining which of the participator computers can communicate with an other of the participator computers, wherein some communications are in real time over the Internet network; and~~

~~providing a member associated image and corresponding member identity information under control of said controller computer, respectively to some of the participator computers~~

sending, from each of said plurality of computers, a login name and a password corresponding to a respective user identity;

determining which of the plurality of computers can communicate communications with at least one other of the plurality of computers,

receiving at least some of the communications in real time via the Internet network; and

providing, to at least one of the plurality of computers under control of the computer system, a member-associated image and member identity information corresponding to one of the user identities.

410. (Currently amended) The ~~method of claim 409, further including the step of:~~ ~~determining a user's age corresponding to said user identity~~ system of claim 392, wherein the computer system is further programmed to determine whether at least one of the communications is censored based on content.

Petitioner Microsoft Corporation, Ex. 1002, p. 3262

411. (Currently amended) The ~~method of claim 410, further including the step of:~~

~~communicating, with said controller computer, an asynchronous message from one of the participator computers to another of the participator computers~~ system of claim 393, wherein the computer system is further programmed to determine whether at least one of the communications is censored based on content.

412. (Currently amended) The ~~method of claim 410, further including the step of censoring, with said controller computer, unwanted communication from a member~~ system of claim 394, wherein the computer system is further programmed to determine whether at least one of the communications is censored based on content.

413. (Currently amended) The ~~method of claim 410, wherein the step of arbitrating includes distributing chat communications to a chat group real time over the Internet network~~ system of claim 395, wherein the computer system is further programmed to determine whether at least one of the communications is censored based on content.

414. (Currently amended) The ~~method of claim 413, further including the step of providing, with said controller computer, private chat capability to the participator computers~~ system of claim 435, wherein the computer system is further programmed to determine whether at least one of the first user identity and the second user identity, individually, is censored from sending the communications data representing at least one of a pointer, video, a graphic, or multimedia, and

send the communications that are not censored from sending.

Petitioner Microsoft Corporation, Ex. 1002, p. 3263

415. (Currently amended) The ~~method of claim 413, further including the step of providing, with said controller computer, private communication window capability to the participator computers~~ system of claim 380, wherein the computer system is further programmed to determine whether at least one of the first user identity and the second user identity, individually, is censored from sending the communications data representing at least one of a pointer, video, a graphic, or multimedia, and

send the communications that are not censored from sending.

416. (Currently amended) The ~~method of claim 410, further including the step of communicating, with said controller computer, human communication sound to the participator computers~~ system of claim 381, wherein the computer system is further programmed to determine whether at least one of the first user identity and the second user identity, individually, is censored from sending the communications data representing at least one of a pointer, video, a graphic, or multimedia, and

send the communications that are not censored from sending.

417. (Currently amended) The ~~method of claim 410, further including the step of providing, with said controller computer, video to the participator computers~~ system of claim 382, wherein the computer system is further programmed to determine whether at least one of the first user identity and the second user identity, individually, is censored from sending the communications data representing at least one of a pointer, video, a graphic, or multimedia, and

send the communications that are not censored from sending.

418. (Currently amended) The ~~method of claim 416, further including the step of providing, with said controller computer, video to the participator computers~~ system of claim 383,

Petitioner Microsoft Corporation, Ex. 1002, p. 3264

wherein the computer system is further programmed to determine whether at least one of the first user identity and the second user identity, individually, is censored from sending the communications data representing at least one of a pointer, video, a graphic, or multimedia, and send the communications that are not censored from sending.

419. (Currently amended) The ~~method of claim 410, wherein the step of arbitrating is carried out with some of said communications including text~~ system of claim 384, wherein the computer system is further programmed to determine whether at least one of the first user identity and the second user identity, individually, is censored from sending the communications data representing at least one of a pointer, video, a graphic, or multimedia, and send the communications that are not censored from sending.

420. (Currently amended) The ~~method of claim 410, wherein the step of arbitrating is carried out with some of said communications communicated out of band~~ system of claim 385, wherein the computer system is further programmed to determine whether at least one of the first user identity and the second user identity, individually, is censored from sending the communications data representing at least one of a pointer, video, a graphic, or multimedia, and send the communications that are not censored from sending.

421. (Currently amended) The ~~method of claim 410, wherein the step of arbitrating is carried out with some of said communications including multimedia media messages~~ system of claim 386, wherein the computer system is further programmed to determine whether at least one of the first user identity and the second user identity, individually, is censored from sending the communications data representing at least one of a pointer, video, a graphic, or multimedia, and

Petitioner Microsoft Corporation, Ex. 1002, p. 3265

send the communications that are not censored from sending.

422. (Currently amended) The ~~method of claim 409, further including the step of controlling, with said controller computer, invisible viewing of the communications~~ system of claim 387, wherein the computer system is further programmed to determine whether at least one of the first user identity and the second user identity, individually, is censored from sending the communications data representing at least one of a pointer, video, a graphic, or multimedia, and send the communications that are not censored from sending.

423. (Currently amended) The ~~method of claim 410, further including the step of controlling, with said controller computer, invisible viewing of the communications~~ system of claim 388, wherein the computer system is further programmed to determine whether at least one of the first user identity and the second user identity, individually, is censored from sending the communications data representing at least one of a pointer, video, a graphic, or multimedia, and send the communications that are not censored from sending.

424. (Currently amended) The ~~method of claim 411, further including the step of controlling, with said controller computer, invisible viewing of the communications~~ system of claim 389, wherein the computer system is further programmed to determine whether at least one of the first user identity and the second user identity, individually, is censored from sending the communications data representing at least one of a pointer, video, a graphic, or multimedia, and send the communications that are not censored from sending.

425. (Currently amended) The ~~method of claim 412, further including the step of controlling, with said controller computer, invisible viewing of the communications~~ system of claim

Petitioner Microsoft Corporation, Ex. 1002, p. 3266

390, wherein the computer system is further programmed to determine whether at least one of the first user identity and the second user identity, individually, is censored from sending the communications data representing at least one of a pointer, video, a graphic, or multimedia, and send the communications that are not censored from sending.

426. (Currently amended) The ~~method of claim 413, further including the step of controlling, with said controller computer, invisible viewing of the communications~~ system of claim 391, wherein the computer system is further programmed to determine whether at least one of the first user identity and the second user identity, individually, is censored from sending the communications data representing at least one of a pointer, video, a graphic, or multimedia, and send the communications that are not censored from sending.

427. (Currently amended) The ~~method of claim 414, further including the step of controlling, with said controller computer, invisible viewing of the communications~~ system of claim 392, wherein the computer system is further programmed to determine whether at least one of the first user identity and the second user identity, individually, is censored from sending the communications data representing at least one of a pointer, video, a graphic, or multimedia, and send the communications that are not censored from sending.

428. (Currently amended) The ~~method of claim 415, further including the step of controlling, with said controller computer, invisible viewing of the communications~~ system of claim 393, wherein the computer system is further programmed to determine whether at least one of the first user identity and the second user identity, individually, is censored from sending the communications data representing at least one of a pointer, video, a graphic, or multimedia, and send the communications that are not censored from sending.

Petitioner Microsoft Corporation, Ex. 1002, p. 3267

429. (Currently amended) The ~~method of claim 416, further including the step of controlling, with said controller computer, invisible viewing of the communications~~ system of claim 394, wherein the computer system is further programmed to determine whether at least one of the first user identity and the second user identity, individually, is censored from sending the communications data representing at least one of a pointer, video, a graphic, or multimedia, and send the communications that are not censored from sending.

430. (Currently amended) The ~~method of claim 417, further including the step of controlling, with said controller computer, invisible viewing of the communications~~ system of claim 395, wherein the computer system is further programmed to determine whether at least one of the first user identity and the second user identity, individually, is censored from sending the communications data representing at least one of a pointer, video, a graphic, or multimedia, and send the communications that are not censored from sending.

431. (Currently amended) The ~~method of claim 418, further including the step of controlling, with said controller computer, invisible viewing of the communications~~ system of claim 435, wherein at least one of the communications includes at least one of text or ascii.

432. (Currently amended) The ~~method of claim 419, further including the step of controlling, with said controller computer, invisible viewing of the communications~~ system of claim 380, wherein at least one of the communications includes at least one of text or ascii.

433. (Currently amended) The ~~method of claim 420, further including the step of controlling, with said controller computer, invisible viewing of the communications~~ system of claim

Petitioner Microsoft Corporation, Ex. 1002, p. 3268

381, wherein at least one of the communications includes at least one of text or ascii.

434. (Currently amended) The ~~method of claim 421, further including the step of controlling, with said controller computer, invisible viewing of the communications~~ system of claim 382, wherein at least one of the communications includes at least one of text or ascii.

435. (Currently amended) A system ~~using computers~~ to communicate over an Internet network, the system including:

a plurality of ~~participator~~ computers connected to a computer system, each of the plurality of computers being connected to a respective input device and a respective output device, the computer system being programmed to: ~~with a controller computer through the Internet network, each said participator computer respectively connected to the controller computer subsequent to sending a respective log in name and a password corresponding to a user identity, the controller computer enabled to carry out the steps of:~~

~~respectively storing a set of privileges corresponding to each of said user identities, the set including a privilege to receive non-textual communication; and~~

~~determining which ones of the participator computers can form a group to communicate communications in real time over the Internet network, said communications respectively in accordance with the corresponding privilege, the participator computers respectively enabled to send and receive said communications including at least one of a video, a graphic, graphical multimedia, or a pointer-triggered message that is receivable on demand~~

form a group, responsive to each of the plurality of computers sending a respective login name and a password corresponding to a respective user identity, the group corresponding to a first of the user identities and a second of the user identities, each member of the group being capable of sending and receiving communications in real time,

Petitioner Microsoft Corporation, Ex. 1002, p. 3269

determine whether at least one of the first user identity and the second user identity, individually, is censored from data representing a pointer, video, audio, a graphic, or multimedia,

cause the plurality of computers in the group to receive, in real time via the Internet network, the communications that are not censored based on the individual user identity, and

cause the plurality of computers in the group to not present the data that is censored based on the individual user identity to the corresponding output device.

436. (Currently amended) The system of claim [435], ~~wherein one of said communications comprises said pointer-triggered message~~ 383, wherein at least one of the communications includes at least one of text or ascii.

437. (Currently amended) The system of claim [435], ~~wherein one of said communications comprises said pointer-triggered message and said graphic and further comprises a human communication sound~~ 384, wherein at least one of the communications includes at least one of text or ascii.

438. (Currently amended) The system of claim [435], ~~wherein one of said communications comprises said pointer-triggered message and said video and said graphic~~ 385, wherein at least one of the communications includes at least one of text or ascii.

439. (Currently amended) The system of claim [435], ~~wherein one of said communications further comprises a human communication sound~~ 386, wherein at least one of the communications includes at least one of text or ascii.

440. (Currently amended) The system of claim [435], ~~wherein one of said communications comprises said video and further comprises a human communication sound~~ 387,

Petitioner Microsoft Corporation, Ex. 1002, p. 3270

wherein at least one of the communications includes at least one of text or ascii.

441. (Currently amended) The system of claim [435], ~~wherein one of said communications comprises said graphic and further comprises a human communication sound~~ 388, wherein at least one of the communications includes at least one of text or ascii.

442. (Currently amended) The system of claim [435], ~~wherein one of said communications comprises said pointer triggered message and further comprises a human communication sound~~ 389, wherein at least one of the communications includes at least one of text or ascii.

443. (Currently amended) The system of claim [435], ~~wherein one of said communications further comprises a human communication sound, and wherein some of said communications include~~ 390, wherein at least one of the communications includes at least one of text or ascii.

444. (Currently amended) The system of claim [435], ~~wherein one of said communications comprises said video~~ 391, wherein at least one of the communications includes at least one of text or ascii.

445. (Currently amended) The system of claim [435], ~~wherein one of said communications comprises said video and said graphic~~ 392, wherein at least one of the communications includes at least one of text or ascii.

446. (Currently amended) The system of claim [435], ~~wherein one of said~~

Petitioner Microsoft Corporation, Ex. 1002, p. 3271

~~communications comprises said video and said pointer-triggered message~~ 393, wherein at least one of the communications includes at least one of text or ascii.

447. (Currently amended) The system of claim [435]~~, wherein one of said communications comprises said video, and wherein some of said communications include text or ascii~~ 394, wherein at least one of the communications includes at least one of text or ascii.

448. (Currently amended) The system of claim [435]~~, wherein one of said communications comprises said graphic~~ 395, wherein at least one of the communications includes at least one of text or ascii.

449. (Currently amended) The system of claim 435, wherein ~~one of said communications comprises said graphic and said pointer-triggered message~~ the computer system is comprised of an Internet service provider.

450. (Currently amended) The system of claim 435, wherein ~~one of said communications comprises said graphic, and wherein some of said communications include text or ascii~~ the computer system is further programmed to:

store, for the first user identity, an authorization associated with presentation of graphical data, and

based on the authorization, allow the graphical data to be presented at the output device corresponding to the second user identity.

451. (Currently amended) The system of claim 435, wherein ~~one of said communications comprises said video and said graphic and further comprises a human~~

Petitioner Microsoft Corporation, Ex. 1002, p. 3272

~~communication sound~~ the computer system is further programmed to:

provide the first user identity with access to a member-associated image corresponding to the second user identity.

452. (Currently amended) The system of claim 435, wherein ~~one of said communications comprises said video and said pointer-triggered message and further comprises a human communication sound~~ the computer system is further programmed to:

determine whether the first user identity is censored from access to a member-associated image corresponding to the second user identity,

If the first user identity is censored, not allowing access to member-associated image, and

If the first user identity is not censored, allow access to the member-associated image.

453. (Currently amended) The system of claim 435, ~~wherein one of said communications comprises said vide and further comprises a human communication sound, and wherein some of said communications include text or ascii~~ the data represents a pointer that produces a pointer-triggered message on demand.

454. (Currently amended) The system of claim [435]~~, wherein one of said communications comprises said video and said graphic and said pointer-triggered message and further comprises a human communication sound~~ 380, wherein the pointer is a pointer that produces a pointer-triggered message on demand.

455. (Currently amended) The system of claim [435]~~, wherein one of said~~

Petitioner Microsoft Corporation, Ex. 1002, p. 3273

~~communications comprises said video and said pointer-triggered message and further comprises a human communication sound, and wherein some of said communications include text or ascii~~ 385, wherein the pointer is a pointer that produces a pointer-triggered message on demand.

456. (Currently amended) The system of claim [435]~~, wherein one of said communications comprises said video and said graphic and said pointer-triggered message and further comprises a human communication sound, and wherein some of said communications include text or ascii~~ 386, wherein the pointer is a pointer that produces a pointer-triggered message on demand.

457. (Currently amended) The system of claim [435]~~, wherein some of said communications include text or ascii~~ 387, wherein the pointer is a pointer that produces a pointer-triggered message on demand.

458. (Currently amended) The system of claim [435]~~, wherein one of said communications comprises said graphic and further comprises a human communication sound, and wherein some of said communications include text or ascii~~ 391, wherein the pointer is a pointer that produces a pointer-triggered message on demand.

459. (Currently amended) The system of claim [435]~~, wherein one of said communications comprises said graphic and said video, and wherein some of said communications include text or ascii~~ 392, wherein the pointer is a pointer that produces a pointer-triggered message on demand.

460. (Currently amended) The system of claim [435]~~, wherein one of said~~

Petitioner Microsoft Corporation, Ex. 1002, p. 3274

~~communications comprises said pointer-triggered message, and wherein some of said communications include text or ascii~~ 393, wherein the pointer is a pointer that produces a pointer-triggered message on demand.

461. (Currently amended) The system of claim [435]~~, wherein one of said communications comprises said pointer-triggered message and said video, and wherein some of said communications include text or ascii~~ 395, wherein the pointer is a pointer that produces a pointer-triggered message on demand.

462. (Currently amended) The system of claim [435]~~, wherein one of said communications comprises video and said graphic and further comprises a human communication sound, and wherein some of said communications include text or ascii~~ 396, wherein the pointer is a pointer that produces a pointer-triggered message on demand.

463. (Currently amended) The system of claim [435]~~, wherein one of said communications comprises said pointer-triggered message and further comprises a human communication sound, and wherein some of said communications include text or ascii~~ 397, wherein the pointer is a pointer that produces a pointer-triggered message on demand.

464. (Currently amended) The system of claim [435]~~, wherein one of said communications comprises said pointer-triggered message and said graphic and further comprises a human communication sound, and wherein some of said communications include text or ascii~~ 402, wherein the pointer is a pointer that produces a pointer-triggered message on demand.

465. (Currently amended) The system of claim [435]~~, wherein one of said~~

Petitioner Microsoft Corporation, Ex. 1002, p. 3275

~~communications comprises video and said graphic and said pointer-triggered message, and wherein some of said communications include text or ascii~~ 403, wherein the pointer is a pointer that produces a pointer-triggered message on demand.

466. (Currently amended) The system of claim [435]~~, wherein one of said communications comprises said graphic and said pointer-triggered message, and wherein some of said communications include text or ascii~~ 404, wherein the pointer is a pointer that produces a pointer-triggered message on demand.

467. (Currently amended) The system of claim ~~604, wherein said step of arbitrating is carried out with said pointer-triggered message, and wherein said controller computer is enabled to carry out the step of arbitrating to determine which of the participator computers can communicate a human communication sound, and which of the participator computers can communicate text or ascii, to the other of the participator computers~~ 408, wherein the pointer is a pointer that produces a pointer-triggered message on demand.

468. (Currently amended) The system of claim ~~604, wherein said step of arbitrating is carried out with said pointer-triggered message and said graphic, and wherein said controller computer is enabled to carry out the step of arbitrating to determine which of the participator computers can communicate test or ascii, to the other of the participator computers~~ 410, wherein the pointer is a pointer that produces a pointer-triggered message on demand.

469. (Currently amended) The system of claim ~~604, wherein said step of arbitrating is carried out with said video and said graphic, and wherein said controller computer is enabled to carry out the step of arbitrating to determine which of the participator computers can communicate~~

Petitioner Microsoft Corporation, Ex. 1002, p. 3276

~~a human communication sound, and which of the participator computers can communicate text or ascii, to the other of the participator computers~~ 411, wherein the pointer is a pointer that produces a pointer-triggered message on demand.

470. (Currently amended) The system of claim ~~604, wherein said step of arbitrating is carried out with said graphic and said pointer-triggered message, and wherein said controller computer is enabled to carry out the step of arbitrating to determine which of the participator computers can communicate a human communication sound, and which of the participator computers can communicate text or ascii, to the other of the participator computers~~ 413, wherein the pointer is a pointer that produces a pointer-triggered message on demand.

471. (Currently amended) The system of claim ~~604, wherein said step of arbitrating is carried out with said graphic and said video, and wherein said controller computer is enabled to carry out the step of arbitrating to determine which of the participator computers can communicate text or ascii to the other of the participator computers~~ 414, wherein the data that is censored from sending represents a pointer that produces a pointer-triggered message on demand.

472. (Currently amended) The system of claim ~~604, wherein said step of arbitrating is carried out with said video and said graphic and said pointer-triggered message, and wherein said controller computer is enabled to carry out the step of arbitrating to determine which of the participator computers can communicate text or ascii to the other of the participator computers~~ 415, wherein the data that represents the pointer that produces a pointer-triggered message on demand.

Petitioner Microsoft Corporation, Ex. 1002, p. 3277

473. (Currently amended) The system of claim ~~604, wherein said step of arbitrating is carried out with said video and said pointer-triggered message, and wherein said controller computer is enabled to carry out the step of arbitrating to determine which of the participator computers can communicate text or ascii to the other of the participator computers~~ 420, wherein the data that represents the pointer that produces a pointer-triggered message on demand.

474. (Currently amended) The system of claim ~~604, wherein said step of arbitrating is carried out with said video and said graphic and said pointer-triggered message~~ 421, wherein the data that represents the pointer that produces a pointer-triggered message on demand.

475. (Currently amended) The system of claim ~~604, wherein said controller computer is enabled to carry out the step of arbitrating to determine which of the participator computers can communicate a human communication sound to the other of the personal computers~~ 422, wherein the data that represents the pointer that produces a pointer-triggered message on demand.

476. (Currently amended) The system of claim ~~604, wherein said step of arbitrating is carried out with said video, and said controller computer is enabled to carry out the step of arbitrating to determine which of the participator computers can communicate a human communication sound to the other of the personal computers~~ 426, wherein the data that represents the pointer that produces a pointer-triggered message on demand.

477. (Currently amended) The system of claim ~~604, wherein said step of~~

Petitioner Microsoft Corporation, Ex. 1002, p. 3278

~~arbitrating is carried out with said graphic, and said controller computer is enabled to carry out the step of arbitrating to determine which of the participator computers can communicate a human communication sound to the other of the personal computers~~ 427, wherein the data that represents the pointer that produces a pointer-triggered message on demand.

478. (Currently amended) The system of claim ~~604, wherein said step of arbitrating is carried out with said pointer-triggered message, and said controller computer is enabled to carry out the step of arbitrating to determine which of the participator computers can communicate a human communication sound to the other of the personal computers~~ 428, wherein the data that represents the pointer that produces a pointer-triggered message on demand.

479. (Currently amended) The system of claim ~~604, wherein said controller computer is enabled to carry out the step of arbitrating to determine which of the participator computers can communicate a human communication sound, and which of the participator computers can communicate text or ascii, to the other of the participator computers~~ 430, wherein the data that represents the pointer that produces a pointer-triggered message on demand.

480. (Currently amended) The system of claim ~~604, wherein said step of arbitrating is carried out with said video~~ 431, wherein the data represents a pointer that produces a pointer-triggered message on demand.

481. (Currently amended) The system of claim ~~604, wherein said step of arbitrating is carried out with said video and said graphic~~ 432, wherein the pointer is a pointer that produces a pointer-triggered message on demand.

Petitioner Microsoft Corporation, Ex. 1002, p. 3279

482. (Currently amended) The system of claim ~~604, wherein said step of arbitrating is carried out with said video and said pointer-triggered message~~ 438, wherein the pointer is a pointer that produces a pointer-triggered message on demand.

483. (Currently amended) The system of claim ~~604, wherein said step of arbitrating is carried out with said video, and wherein said controller computer is enabled to carry out the step of arbitrating to determine which of the participator computers can communicate text or ascii to the other of the participator computers~~ 439, wherein the pointer is a pointer that produces a pointer-triggered message on demand.

484. (Currently amended) The system of claim ~~604, wherein said step of arbitrating is carried out with said graphic~~ 440, wherein the pointer is a pointer that produces a pointer-triggered message on demand.

485. (Currently amended) The system of claim ~~604, wherein said step of arbitrating is carried out with said graphic and said pointer-triggered message~~ 444, wherein the pointer is a pointer that produces a pointer-triggered message on demand.

486. (Currently amended) The system of claim ~~604, wherein said step of arbitrating is carried out with said graphic, and wherein said controller computer is enabled to carry out the step of arbitrating to determine which of the participator computers can communicate text or ascii to the other of the participator computers~~ 445, wherein the pointer is a pointer that produces a pointer-triggered message on demand.

487. (Currently amended) The system of claim ~~604, wherein said step of~~

Petitioner Microsoft Corporation, Ex. 1002, p. 3280

~~arbitrating is carried out with said video and said graphic, and said controller computer is enabled to carry out the step of arbitrating to determine which of the participator computers can communicate a human communication sound to the other of the personal computers~~ 446, wherein the pointer is a pointer that produces a pointer-triggered message on demand.

488. (Currently amended) The system of claim ~~604, wherein said step of arbitrating is carried out with said video and said pointer-triggered message, and said and said controller computer is enabled to carry out the step of arbitrating to determine which of the participator computers can communicate a human communication sound to the other of the personal computers~~ 448, wherein the pointer is a pointer that produces a pointer-triggered message on demand.

489. (Currently amended) The system of claim ~~604, wherein said step of arbitrating is carried out with said video, and wherein said controller computer is enabled to carry out the step of arbitrating to determine which of the participator computers can communicate a human communication sound, and which of the participator computers can communicate text or ascii, to the other of the participator computers~~ 449, wherein the data represents a pointer that produces a pointer-triggered message on demand.

490. (Currently amended) The system of claim ~~604, wherein said step of arbitrating is carried out with said sound and said video and said graphic and said pointer-triggered message~~ 450, wherein the data represents a pointer that produces a pointer-triggered message on demand.

491. (Currently amended) The system of claim ~~604, wherein said step of~~

Petitioner Microsoft Corporation, Ex. 1002, p. 3281

~~arbitrating is carried out with said sound and said video and said pointer-triggered message, and wherein said controller computer is enabled to carry out the step of arbitrating to determine which of the participator computers can communicate text or ascii to the other of the participator computers~~ 451, wherein the data represents a pointer that produces a pointer-triggered message on demand.

492. (Currently amended) The system of claim ~~604, wherein said step of arbitrating is carried out with said video and said graphic and said pointer-triggered message, and wherein said controller computer is enabled to carry out the step of arbitrating to determine which of the participator computers can communicate a human communication sound, and which of the participator computers can communicate text or ascii, to the other of the participator computers~~ 452, wherein the data represents a pointer that produces a pointer-triggered message on demand.

493. (Currently amended) The system of claim 604, wherein ~~said step of arbitrating is carried out with said graphic and said pointer-triggered message, and said controller computer is enabled to carry out the step of arbitrating to determine which of the participator computers can communicate a human communication sound to the other of the personal computers~~ the data represents a pointer.

494. (Currently amended) The system of claim 604, wherein ~~said step of arbitrating is carried out with said pointer-triggered message, and wherein said controller computer is enabled to carry out the step of arbitrating to determine which of the participator computers can communicate text or ascii to the other of the participator computers~~ data represents video.

495. (Currently amended) The system of claim 604, wherein ~~said controller~~

Petitioner Microsoft Corporation, Ex. 1002, p. 3282

~~computer is enabled to carry out the step of arbitrating to determine which of the participator computers can communicate text or ascii to the other of the participator computers~~ the data represents audio.

496. (Currently amended) The system of claim 604, wherein ~~said step of arbitrating is carried out with said pointer-triggered message~~ the data represents a graphic.

497. (Currently amended) The system of claim 604, wherein ~~said step of arbitrating is carried out with graphic, and wherein said controller computer is enabled to carry out the step of arbitrating to determine which of the participator computers can communicate a human communication sound, and which of the participator computers can communicate text or ascii, to the other of the participator computers~~ the data represents multimedia.

498. (Currently amended) The system of claim [435]~~, wherein said controller computer is enabled to carry out the step of:~~

~~determining a user's age corresponding to said user identity~~ 604, wherein the data represents a pointer and video.

499. (Currently amended) The system of claim [436]~~, wherein said controller computer is enabled to carry out the step of:~~

~~determining a user's age corresponding to said user identity~~ 604, wherein the data represents a pointer and audio.

500. (Currently amended) The system of claim [437]~~, wherein said controller computer is enabled to carry out the step of:~~

Petitioner Microsoft Corporation, Ex. 1002, p. 3283

~~determining a user's age corresponding to said user identity~~ 604, wherein the data represents a pointer and a graphic.

501. (Currently amended) The system of claim [438], ~~wherein said controller computer is enabled to carry out the step of:~~

~~determining a user's age corresponding to said user identity~~ 604, wherein the data represents video and audio.

502. (Currently amended) The system of claim [439], ~~wherein said controller computer is enabled to carry out the step of:~~

~~determining a user's age corresponding to said user identity~~ 604, wherein the data represents video and a graphic.

503. (Currently amended) The system of claim [440], ~~wherein said controller computer is enabled to carry out the step of:~~

~~determining a user's age corresponding to said user identity~~ 604, wherein the data represents video and a graphic.

504. (Currently amended) The system of claim [441], ~~wherein said controller computer is enabled to carry out the step of:~~

~~determining a user's age corresponding to said user identity~~ 604, wherein the data represents a pointer and video and a audio.

505. (Currently amended) The system of claim [442], ~~wherein said controller computer is enabled to carry out the step of:~~

Petitioner Microsoft Corporation, Ex. 1002, p. 3284

~~determining a user's age corresponding to said user identity~~ 604, wherein the data represents a pointer and video and a graphic.

506. (Currently amended) The system of claim [443]~~, wherein said controller computer is enabled to carry out the step of:~~

~~determining a user's age corresponding to said user identity~~ 604, wherein the data represents a pointer and audio and a graphic.

507. (Currently amended) The system of claim [444]~~, wherein said controller computer is enabled to carry out the step of:~~

~~determining a user's age corresponding to said user identity~~ 604, wherein the data represents video and audio and a graphic.

508. (Currently amended) The system of claim [445]~~, wherein said controller computer is enabled to carry out the step of:~~

~~determining a user's age corresponding to said user identity~~ 604, wherein the data represents a pointer and video and audio and a graphic.

509. (Currently amended) The system of claim [446]~~, wherein said controller computer is enabled to carry out the step of:~~

~~determining a user's age corresponding to said user identity~~ 604, wherein at least some of the communications include at least one of text or ascii.

510. (Currently amended) The system of claim [447]~~, wherein said controller computer is enabled to carry out the step of:~~

Petitioner Microsoft Corporation, Ex. 1002, p. 3285

~~determining a user's age corresponding to said user identity~~ 493, wherein at least some of the communications include at least one of text or ascii.

511. (Currently amended) The system of claim [448]~~, wherein said controller computer is enabled to carry out the step of:~~

~~determining a user's age corresponding to said user identity~~ 494, wherein at least some of the communications include at least one of text or ascii.

512. (Currently amended) The system of claim [449]~~, wherein said controller computer is enabled to carry out the step of:~~

~~determining a user's age corresponding to said user identity~~ 495, wherein at least some of the communications include at least one of text or ascii.

513. (Currently amended) The system of claim [450]~~, wherein said controller computer is enabled to carry out the step of:~~

~~determining a user's age corresponding to said user identity~~ 496, wherein at least some of the communications include at least one of text or ascii.

514. (Currently amended) The system of claim [451]~~, wherein said controller computer is enabled to carry out the step of:~~

~~determining a user's age corresponding to said user identity~~ 497, wherein at least some of the communications include at least one of text or ascii.

515. (Currently amended) The system of claim [452]~~, wherein said controller computer is enabled to carry out the step of:~~

Petitioner Microsoft Corporation, Ex. 1002, p. 3286

~~determining a user's age corresponding to said user identity~~ 498, wherein at least some of the communications include at least one of text or ascii.

516. (Currently amended) The system of claim [453]~~, wherein said controller computer is enabled to carry out the step of:~~

~~determining a user's age corresponding to said user identity~~ 499, wherein at least some of the communications include at least one of text or ascii.

517. (Currently amended) The system of claim [454]~~, wherein said controller computer is enabled to carry out the step of:~~

~~determining a user's age corresponding to said user identity~~ 500, wherein at least some of the communications include at least one of text or ascii.

518. (Currently amended) The system of claim [455]~~, wherein said controller computer is enabled to carry out the step of:~~

~~determining a user's age corresponding to said user identity~~ 501, wherein at least some of the communications include at least one of text or ascii.

519. (Currently amended) The system of claim [456]~~, wherein said controller computer is enabled to carry out the step of:~~

~~determining a user's age corresponding to said user identity~~ 502, wherein at least some of the communications include at least one of text or ascii.

520. (Currently amended) The system of claim [457]~~, wherein said controller computer is enabled to carry out the step of:~~

Petitioner Microsoft Corporation, Ex. 1002, p. 3287

~~determining a user's age corresponding to said user identity~~ 503, wherein at least some of the communications include at least one of text or ascii.

521. (Currently amended) The system of claim [458]~~, wherein said controller computer is enabled to carry out the step of:~~

~~determining a user's age corresponding to said user identity~~ 504, wherein at least some of the communications include at least one of text or ascii.

522. (Currently amended) The system of claim [459]~~, wherein said controller computer is enabled to carry out the step of:~~

~~determining a user's age corresponding to said user identity~~ 505, wherein at least some of the communications include at least one of text or ascii.

523. (Currently amended) The system of claim [460]~~, wherein said controller computer is enabled to carry out the step of:~~

~~determining a user's age corresponding to said user identity~~ 506, wherein at least some of the communications include at least one of text or ascii.

524. (Currently amended) The system of claim [461]~~, wherein said controller computer is enabled to carry out the step of:~~

~~determining a user's age corresponding to said user identity~~ 507, wherein at least some of the communications include at least one of text or ascii.

525. (Currently amended) The system of claim [462]~~, wherein said controller computer is enabled to carry out the step of:~~

Petitioner Microsoft Corporation, Ex. 1002, p. 3288

~~determining a user's age corresponding to said user identity~~ 508, wherein at least some of the communications include at least one of text or ascii.

526. (Currently amended) The system of claim [463]~~, wherein said controller computer is enabled to carry out the step of:~~

~~determining a user's age corresponding to said user identity~~ 604, wherein the computer system is further programmed to determine whether at least one of the communications is censored based on content.

527. (Currently amended) The system of claim [464]~~, wherein said controller computer is enabled to carry out the step of:~~

~~determining a user's age corresponding to said user identity~~ 493, wherein the computer system is further programmed to determine whether at least one of the communications is censored based on content.

528. (Currently amended) The system of claim [465]~~, wherein said controller computer is enabled to carry out the step of:~~

~~determining a user's age corresponding to said user identity~~ 494, wherein the computer system is further programmed to determine whether at least one of the communications is censored based on content.

529. (Currently amended) The system of claim [466]~~, wherein said controller computer is enabled to carry out the step of:~~

~~determining a user's age corresponding to said user identity~~ 495, wherein the computer system is further programmed to determine whether at least one of the communications

Petitioner Microsoft Corporation, Ex. 1002, p. 3289

is censored based on content.

530. (Currently amended) The system of claim [467], ~~wherein said controller computer is enabled to carry out the step of:~~

~~determining a user's age corresponding to said user identity~~ 496, wherein the computer system is further programmed to determine whether at least one of the communications is censored based on content.

531. (Currently amended) The system of claim [468], ~~wherein said controller computer is enabled to carry out the step of:~~

~~determining a user's age corresponding to said user identity~~ 497, wherein the computer system is further programmed to determine whether at least one of the communications is censored based on content.

532. (Currently amended) The system of claim [469], ~~wherein said controller computer is enabled to carry out the step of:~~

~~determining a user's age corresponding to said user identity~~ 498, wherein the computer system is further programmed to determine whether at least one of the communications is censored based on content.

533. (Currently amended) The system of claim [470], ~~wherein said controller computer is enabled to carry out the step of:~~

~~determining a user's age corresponding to said user identity~~ 499, wherein the computer system is further programmed to determine whether at least one of the communications is censored based on content.

Petitioner Microsoft Corporation, Ex. 1002, p. 3290

534. (Currently amended) The system of claim [471]~~, wherein said controller computer is enabled to carry out the step of:~~

~~determining a user's age corresponding to said user identity~~ 500, wherein the computer system is further programmed to determine whether at least one of the communications is censored based on content.

535. (Currently amended) The system of claim [472]~~, wherein said controller computer is enabled to carry out the step of:~~

~~determining a user's age corresponding to said user identity~~ 501, wherein the computer system is further programmed to determine whether at least one of the communications is censored based on content.

536. (Currently amended) The system of claim [473]~~, wherein said controller computer is enabled to carry out the step of:~~

~~determining a user's age corresponding to said user identity~~ 502, wherein the computer system is further programmed to determine whether at least one of the communications is censored based on content.

537. (Currently amended) The system of claim [474]~~, wherein said controller computer is enabled to carry out the step of:~~

~~determining a user's age corresponding to said user identity~~ 503, wherein the computer system is further programmed to determine whether at least one of the communications is censored based on content.

Petitioner Microsoft Corporation, Ex. 1002, p. 3291

538. (Currently amended) The system of claim [475]~~, wherein said controller computer is enabled to carry out the step of:~~

~~determining a user's age corresponding to said user identity~~ 504, wherein the computer system is further programmed to determine whether at least one of the communications is censored based on content.

539. (Currently amended) The system of claim [476]~~, wherein said controller computer is enabled to carry out the step of:~~

~~determining a user's age corresponding to said user identity~~ 505, wherein the computer system is further programmed to determine whether at least one of the communications is censored based on content.

540. (Currently amended) The system of claim [477]~~, wherein said controller computer is enabled to carry out the step of:~~

~~determining a user's age corresponding to said user identity~~ 506, wherein the computer system is further programmed to determine whether at least one of the communications is censored based on content.

541. (Currently amended) The system of claim [478]~~, wherein said controller computer is enabled to carry out the step of:~~

~~determining a user's age corresponding to said user identity~~ 507, wherein the computer system is further programmed to determine whether at least one of the communications is censored based on content.

542. (Currently amended) The system of claim [479]~~, wherein said controller~~

Petitioner Microsoft Corporation, Ex. 1002, p. 3292

~~computer is enabled to carry out the step of:~~

~~determining a user's age corresponding to said user identity~~ 508, wherein the computer system is further programmed to determine whether at least one of the communications is censored based on content.

543. (Currently amended) The system of claim [480]~~, wherein said controller computer is enabled to carry out the step of:~~

~~determining a user's age corresponding to said user identity~~ 604, wherein at least one of the communications includes a human communication of sound.

544. (Currently amended) The system of claim [481]~~, wherein said controller computer is enabled to carry out the step of:~~

~~determining a user's age corresponding to said user identity~~ 493, wherein at least one of the communications includes a human communication of sound.

545. (Currently amended) The system of claim [482]~~, wherein said controller computer is enabled to carry out the step of:~~

~~determining a user's age corresponding to said user identity~~ 494, wherein at least one of the communications includes a human communication of sound.

546. (Currently amended) The system of claim [483]~~, wherein said controller computer is enabled to carry out the step of:~~

~~determining a user's age corresponding to said user identity~~ 495, wherein at least one of the communications includes a human communication of sound.

Petitioner Microsoft Corporation, Ex. 1002, p. 3293

547. (Currently amended) The system of claim [484]~~, wherein said controller computer is enabled to carry out the step of:~~

~~determining a user's age corresponding to said user identity~~ 496, wherein at least one of the communications includes a human communication of sound.

548. (Currently amended) The system of claim [485]~~, wherein said controller computer is enabled to carry out the step of:~~

~~determining a user's age corresponding to said user identity~~ 497, wherein at least one of the communications includes a human communication of sound.

549. (Currently amended) The system of claim [486]~~, wherein said controller computer is enabled to carry out the step of:~~

~~determining a user's age corresponding to said user identity~~ 498, wherein at least one of the communications includes a human communication of sound.

550. (Currently amended) The system of claim [487]~~, wherein said controller computer is enabled to carry out the step of:~~

~~determining a user's age corresponding to said user identity~~ 499, wherein at least one of the communications includes a human communication of sound.

551. (Currently amended) The system of claim [488]~~, wherein said controller computer is enabled to carry out the step of:~~

~~determining a user's age corresponding to said user identity~~ 500, wherein at least one of the communications includes a human communication of sound.

Petitioner Microsoft Corporation, Ex. 1002, p. 3294

552. (Currently amended) The system of claim [489]~~, wherein said controller computer is enabled to carry out the step of:~~

~~determining a user's age corresponding to said user identity~~ 501, wherein at least one of the communications includes a human communication of sound.

553. (Currently amended) The system of claim [490]~~, wherein said controller computer is enabled to carry out the step of:~~

~~determining a user's age corresponding to said user identity~~ 502, wherein at least one of the communications includes a human communication of sound.

554. (Currently amended) The system of claim [491]~~, wherein said controller computer is enabled to carry out the step of:~~

~~determining a user's age corresponding to said user identity~~ 503, wherein at least one of the communications includes a human communication of sound.

555. (Currently amended) The system of claim [492]~~, wherein said controller computer is enabled to carry out the step of:~~

~~determining a user's age corresponding to said user identity~~ 504, wherein at least one of the communications includes a human communication of sound.

556. (Currently amended) The system of claim [493]~~, wherein said controller computer is enabled to carry out the step of:~~

~~determining a user's age corresponding to said user identity~~ 505, wherein at least one of the communications includes a human communication of sound.

Petitioner Microsoft Corporation, Ex. 1002, p. 3295

557. (Currently amended) The system of claim [494]~~, wherein said controller computer is enabled to carry out the step of:~~

~~determining a user's age corresponding to said user identity~~ 506, wherein at least one of the communications includes a human communication of sound.

558. (Currently amended) The system of claim [495]~~, wherein said controller computer is enabled to carry out the step of:~~

~~determining a user's age corresponding to said user identity~~ 507, wherein at least one of the communications includes a human communication of sound.

559. (Currently amended) The system of claim [496]~~, wherein said controller computer is enabled to carry out the step of:~~

~~determining a user's age corresponding to said user identity~~ 508, wherein at least one of the communications includes a human communication of sound.

560. (Currently amended) The system of claim [497]~~, wherein said controller computer is enabled to carry out the step of:~~

~~determining a user's age corresponding to said user identity~~ 604, wherein the computer system is further programmed to determine whether neither of the first user identity and the second user identity is censored from the group.

561. (Currently amended) The system of claim [435]~~, wherein the step of arbitrating includes authorizing a moderator for said communications~~ 493, wherein the computer system is further programmed to determine whether neither of the first user identity and the second user identity is censored from the group.

Petitioner Microsoft Corporation, Ex. 1002, p. 3296

562. (Currently amended) The system of claim [436], ~~wherein the step of arbitrating includes authorizing a moderator for said communications~~ 494, wherein the computer system is further programmed to determine whether neither of the first user identity and the second user identity is censored from the group.

563. (Currently amended) The system of claim [437], ~~wherein said controller computer is enabled to carry out the step of arbitrating includes authorizing a moderator for said communications~~ 495, wherein the computer system is further programmed to determine whether neither of the first user identity and the second user identity is censored from the group.

564. (Currently amended) The system of claim [438], ~~wherein said controller computer is enabled to carry out the step of arbitrating includes authorizing a moderator for said communications~~ 496, wherein the computer system is further programmed to determine whether neither of the first user identity and the second user identity is censored from the group.

565. (Currently amended) The system of claim [439], ~~wherein said controller computer is enabled to carry out the step of arbitrating includes authorizing a moderator for said communications~~ 497, wherein the computer system is further programmed to determine whether neither of the first user identity and the second user identity is censored from the group.

566. (Currently amended) The system of claim [440], ~~wherein said controller computer is enabled to carry out the step of arbitrating includes authorizing a moderator for said communications~~ 498, wherein the computer system is further programmed to determine whether neither of the first user identity and the second user identity is censored from the group.

Petitioner Microsoft Corporation, Ex. 1002, p. 3297

567. (Currently amended) The system of claim [441]~~, wherein said controller computer is enabled to carry out the step of arbitrating includes authorizing a moderator for said communications~~ 499, wherein the computer system is further programmed to determine whether neither of the first user identity and the second user identity is censored from the group.

568. (Currently amended) The system of claim [442]~~, wherein said controller computer is enabled to carry out the step of arbitrating includes authorizing a moderator for said communications~~ 500, wherein the computer system is further programmed to determine whether neither of the first user identity and the second user identity is censored from the group.

569. (Currently amended) The system of claim [443]~~, wherein said controller computer is enabled to carry out the step of arbitrating includes authorizing a moderator for said communications~~ 501, wherein the computer system is further programmed to determine whether neither of the first user identity and the second user identity is censored from the group.

570. (Currently amended) The system of claim [444]~~, wherein said controller computer is enabled to carry out the step of arbitrating includes authorizing a moderator for said communications~~ 502, wherein the computer system is further programmed to determine whether neither of the first user identity and the second user identity is censored from the group.

571. (Currently amended) The system of claim [445]~~, wherein said controller computer is enabled to carry out the step of arbitrating includes authorizing a moderator for said communications~~ 503, wherein the computer system is further programmed to determine whether neither of the first user identity and the second user identity is censored from the group.

Petitioner Microsoft Corporation, Ex. 1002, p. 3298

572. (Currently amended) The system of claim [446]~~, wherein said controller computer is enabled to carry out the step of arbitrating includes authorizing a moderator for said communications~~ 504, wherein the computer system is further programmed to determine whether neither of the first user identity and the second user identity is censored from the group.

573. (Currently amended) The system of claim [447]~~, wherein said controller computer is enabled to carry out the step of arbitrating includes authorizing a moderator for said communications~~ 505, wherein the computer system is further programmed to determine whether neither of the first user identity and the second user identity is censored from the group.

574. (Currently amended) The system of claim [448]~~, wherein said controller computer is enabled to carry out the step of arbitrating includes authorizing a moderator for said communications~~ 506, wherein the computer system is further programmed to determine whether neither of the first user identity and the second user identity is censored from the group.

575. (Currently amended) The system of claim [449]~~, wherein said controller computer is enabled to carry out the step of arbitrating includes authorizing a moderator for said communications~~ 507, wherein the computer system is further programmed to determine whether neither of the first user identity and the second user identity is censored from the group.

576. (Currently amended) The system of claim [450]~~, wherein said controller computer is enabled to carry out the step of arbitrating includes authorizing a moderator for said communications~~ 508, wherein the computer system is further programmed to determine whether neither of the first user identity and the second user identity is censored from the group.

Petitioner Microsoft Corporation, Ex. 1002, p. 3299

577. (Currently amended) The system of claim [451]~~, wherein said controller computer is enabled to carry out the step of arbitrating includes authorizing a moderator for said communications~~ 604, wherein the computer system is further programmed to determine whether neither of the first user identity and the second user identity is censored from the group.

578. (Currently amended) The system of claim [452]~~, wherein said controller computer is enabled to carry out the step of arbitrating includes authorizing a moderator for said communications~~ 604, wherein the computer system is further programmed to:

store, for the first user identity, an authorization associated with presentation of graphical data; and

based on the authorization, allow the graphical data to be presented at the output device corresponding to the second user identity.

579. (Currently amended) The system of claim [453]~~, wherein said controller computer is enabled to carry out the step of arbitrating includes authorizing a moderator for said communications~~ 604, wherein the computer system is further programmed to:

provide the first user identity with access to a member-associated image corresponding to the second user identity.

580. (Currently amended) The system of claim [454]~~, wherein said controller computer is enabled to carry out the step of arbitrating includes authorizing a moderator for said communications~~ 604, wherein the computer system is further programmed to:

determine whether the first user identity is censored from access to a member-associated image corresponding to the second user identity.

Petitioner Microsoft Corporation, Ex. 1002, p. 3300

if the first user identity is censored, not allow access to the member-associated image, and

if the first user identity is not censored, allow access to the member-associated image.

581. (Currently amended) The system of claim [455], ~~wherein said controller computer is enabled to carry out the step of arbitrating includes authorizing a moderator for said communications~~ 604, wherein the data represents a pointer that produces a pointer-triggered message on demand.

582. (Currently amended) The system of claim [456], ~~wherein said controller computer is enabled to carry out the step of arbitrating includes authorizing a moderator for said communications~~ 493, wherein the pointer is a pointer that produces a pointer-triggered message on demand.

583. (Currently amended) The system of claim [457], ~~wherein said controller computer is enabled to carry out the step of arbitrating includes authorizing a moderator for said communications~~ 498, wherein the pointer is a pointer that produces a pointer-triggered message on demand.

584. (Currently amended) The system of claim [458], ~~wherein said controller computer is enabled to carry out the step of arbitrating includes authorizing a moderator for said communications~~ 499, wherein the pointer is a pointer that produces a pointer-triggered message on demand.

Petitioner Microsoft Corporation, Ex. 1002, p. 3301

585. (Currently amended) The system of claim [459], ~~wherein said controller computer is enabled to carry out the step of arbitrating includes authorizing a moderator for said communications~~ 500, wherein the pointer is a pointer that produces a pointer-triggered message on demand.

586. (Currently amended) The system of claim [460], ~~wherein said controller computer is enabled to carry out the step of arbitrating includes authorizing a moderator for said communications~~ 504, wherein the pointer is a pointer that produces a pointer-triggered message on demand.

587. (Currently amended) The system of claim [461], ~~wherein the step of arbitrating includes authorizing a moderator for said communications~~ 505, wherein the pointer is a pointer that produces a pointer-triggered message on demand.

588. (Currently amended) The system of claim [462], ~~wherein said controller computer is enabled to carry out the step of arbitrating includes authorizing a moderator for said communications~~ 506, wherein the pointer is a pointer that produces a pointer-triggered message on demand.

589. (Currently amended) The system of claim [463], ~~wherein said controller computer is enabled to carry out the step of arbitrating includes authorizing a moderator for said communications~~ 508, wherein the pointer is a pointer that produces a pointer-triggered message on demand.

590. (Currently amended) The system of claim [464], ~~wherein said controller~~

Petitioner Microsoft Corporation, Ex. 1002, p. 3302

~~computer is enabled to carry out the step of arbitrating includes authorizing a moderator for said communications~~ 509, wherein the data represents a pointer that produces a pointer-triggered message on demand.

591. (Currently amended) The system of claim [465]~~, wherein said controller computer is enabled to carry out the step of arbitrating includes authorizing a moderator for said communications~~ 510, wherein the pointer is a pointer that produces a pointer-triggered message on demand.

591. (Currently amended) The system of claim [466]~~, wherein the step of arbitrating includes authorizing a moderator for said communications~~ 515, wherein the pointer is a pointer that produces a pointer-triggered message on demand.

592. (Currently amended) The ~~method of claim 165, wherein said step of using is carried out with said sound being a human communication sound~~ system of claim 516, wherein the pointer is a pointer that produces a pointer-triggered message on demand.

593. (Currently amended) The system of claim ~~604, wherein said controller computer is enabled to determine which of the participator computers can communicate a user image to the other of the participator computers~~ 517, wherein the pointer is a pointer that produces a pointer-triggered message on demand.

594. (Currently amended) The system of claim [475]~~, wherein said controller computer is enabled to determine which of the participator computers can communicate a user image to the other of the participator computers~~ 521, wherein the pointer is a pointer that produces

Petitioner Microsoft Corporation, Ex. 1002, p. 3303

a pointer-triggered message on demand.

595. (Currently amended) The system of claim [476], ~~wherein said controller computer is enabled to determine which of the participator computers can communicate a user image to the other of the participator computers~~ 522, wherein the pointer is a pointer that produces a pointer-triggered message on demand.

596. (Currently amended) The system of claim [480], ~~wherein said controller computer is enabled to determine which of the participator computers can communicate a user image to the other of the participator computers~~ 523, wherein the pointer is a pointer that produces a pointer-triggered message on demand.

597. (Currently amended) The system of claim [495], ~~wherein said controller computer is enabled to determine which of the participator computers can communicate a user image to the other of the participator computers~~ 525, wherein the pointer is a pointer that produces a pointer-triggered message on demand.

598. (Currently amended) The system of claim [435], ~~wherein said controller computer is enabled to carry out the step of:~~

~~communicating a user image from one member in the group to another member in the group~~ 526, wherein the data represents a pointer that produces a pointer-triggered message on demand.

599. (Currently amended) A ~~computer~~ system ~~distributing~~ to receive a communication ~~over~~ via an Internet network, the system including:

Petitioner Microsoft Corporation, Ex. 1002, p. 3304

~~a controller computer, a first participator computer, and a second participator computer;~~

~~participator software respectively on the participator computers to enable the communication, including at least one of a video, graphic, sound, or multimedia; wherein said computers are enabled to cooperate in carrying out the steps of:~~

~~subsequent to said participator computers respectively sending an authenticated user identity, communicating a message comprising text or ascii, and a member public data reference, from the first participator computer to said controller computer and from said controller computer to the second participator computer; and~~

~~using said member public data reference to receive the communication from the first participator computer at the second participator computer in real time over the Internet network~~

a plurality of computers connected, responsive to each of the plurality of computers sending a respective login name and a password corresponding to a respective user identity, to a computer system;

a first of the plurality of computers being programmed to communicate to the computer system a message including a pointer pointing to a communication that includes data representing a video, a graphic, sound, or multimedia;

the computer system being programmed to communicate the message to a second of the plurality of computers; and

the second computer being programmed to receive the communication originating from the first computer, the communication being sent in real time and via the Internet network.

600. (Currently amended) The system of claim ~~599, wherein said controller computer is further enabled to carry out the step of:~~

~~determining a user's age corresponding to said user identity~~ 527, wherein the

Petitioner Microsoft Corporation, Ex. 1002, p. 3305

pointer is a pointer that produces a pointer-triggered message on demand.

601. (Currently amended) The system of claim ~~599, wherein communication includes the video~~ 532, wherein the pointer is a pointer that produces a pointer-triggered message on demand.

602. (Currently amended) The system of claim ~~600, wherein communication includes the video~~ 533, wherein the pointer is a pointer that produces a pointer-triggered message on demand.

603. (Currently amended) The system of claim ~~599, wherein said controller computer is further enabled to carry out the step of forming a chat channel over the Internet network and arbitrating channel communications between said participator computers at said controller computer~~ 534, wherein the pointer is a pointer that produces a pointer-triggered message on demand.

604. (Currently amended) An Internet network communications system ~~using computers to communicate over an Internet network~~, the system including:

a plurality of ~~participator~~ computers connected ~~with a controller computer, at least one of said participator computers connected through the Internet network subsequent to sending a log in name and a password corresponding to a user identity wherein the controller computer is enabled to carry out the steps of:~~

~~storing a set of privileges corresponding to said user identity, the set including a privilege to receive non-textual communication; and~~

~~determining which of the participator computers can communicate to an other of the~~

Petitioner Microsoft Corporation, Ex. 1002, p. 3306

~~participator computers over the Internet network in real time, at least one of a video, a graphic, or a pointer-triggered message that is receivable on demand~~, responsive to each of the plurality of computers sending a respective login name and a password corresponding to a respective user identity, to a computer system programmed to:

form a group corresponding to a first of the user identities and a second of the user identities, each member of the group being capable of sending and receiving communications in real time, and

determine whether at least one of the first user identity and the second user identity, individually, is censored from sending data within the communications, the data representing at least one of a pointer, video, audio, a graphic, or multimedia,

wherein the plurality of computers receive in real time and via the Internet network the communications that are not censored based on the individual user identity and do not send the data that is censored based on the individual user identity.

605. (Currently amended) The system of claim ~~599, wherein said communication including comprises said sound~~ 538, wherein the pointer is a pointer that produces a pointer-triggered message on demand.

606. (Currently amended) The system of claim ~~599, wherein said communication comprises said sound and said video~~ 539, wherein the pointer is a pointer that produces a pointer-triggered message on demand.

607. (Currently amended) The system of claim ~~600, wherein said communication comprises said sound~~ 540, wherein the pointer is a pointer that produces a pointer-triggered message on demand.

Petitioner Microsoft Corporation, Ex. 1002, p. 3307

608. (Currently amended) The system of claim ~~600, wherein said communication comprises said and said video~~ 542, wherein the pointer is a pointer that produces a pointer-triggered message on demand.

609. (Currently amended) The system of claim ~~599, wherein said controller computer is further enabled to carry out the step of sending the communication as an out of band communication~~ 543, wherein the data represents a pointer that produces a pointer-triggered message on demand.

610. (Currently amended) The system of claim ~~600, wherein said controller computer is further enabled to carry out the step of communicating an asynchronous communication from said controller computer to one of said participator computers~~ 544, wherein the pointer is a pointer that produces a pointer-triggered message on demand.

611. (Currently amended) The system of claim ~~599, wherein said controller computer is further enabled to carry out the step of communicating an asynchronous communication from said controller computer to one of said participator computers~~ 549, wherein the pointer is a pointer that produces a pointer-triggered message on demand.

612. (Currently amended) The system of claim ~~604, wherein said controller computer is further enabled to carry out the step of communicating an asynchronous communication from said controller computer to one of said participator computers~~ 550, wherein the pointer is a pointer that produces a pointer-triggered message on demand.

Petitioner Microsoft Corporation, Ex. 1002, p. 3308

613. (Currently amended) The system of claim ~~439, wherein said controller computer is further enabled to carry out the step of communicating a user image from one member in the group to another member in the group~~ 551, wherein the pointer is a pointer that produces a pointer-triggered message on demand.

614. (Currently amended) The system of claim ~~440, wherein said controller computer is further enabled to carry out the step of communicating a user image from one member in the group to another member in the group~~ 555, wherein the pointer is a pointer that produces a pointer-triggered message on demand.

615. (Currently amended) The system of claim [444]~~, wherein said controller computer is further enabled to carry out the step of communicating a user image from one member in the group to another member in the group~~ 556, wherein the pointer is a pointer that produces a pointer-triggered message on demand.

616. (Currently amended) The system of claim [457]~~, wherein said controller computer is further enabled to carry out the step of communicating a user image from one member in the group to another member in the group~~ 557, wherein the pointer is a pointer that produces a pointer-triggered message on demand.

617. (Currently amended) The system of claim [435]~~, wherein said controller computer is further enabled to carry out the step of communicating an asynchronous communication from said controller computer to one of said participator computers~~ 559, wherein the pointer is a pointer that produces a pointer-triggered message on demand.

Petitioner Microsoft Corporation, Ex. 1002, p. 3309

618. (Currently amended) The system of claim [435]~~, wherein the step of arbitrating includes censoring responsive to at least one of said user identity, group, and content~~ 560, wherein the data represents a pointer that produces a pointer-triggered message on demand.

619. (Currently amended) The system of claim [436]~~, wherein the step of arbitrating includes censoring responsive to at least one of said user identity, group, and content~~ 561, wherein the pointer is a pointer that produces a pointer-triggered message on demand.

620. (Currently amended) The system of claim [437]~~, wherein the step of arbitrating includes censoring responsive to at least one of said user identity, group, and content~~ 566, wherein the pointer is a pointer that produces a pointer-triggered message on demand.

621. (Currently amended) The system of claim [438]~~, wherein the step of arbitrating includes censoring responsive to at least one of said user identity, group, and content~~ 567, wherein the pointer is a pointer that produces a pointer-triggered message on demand.

622. (Currently amended) The system of claim [439]~~, wherein the step of arbitrating includes censoring responsive to at least one of said user identity, group, and content~~ 568, wherein the pointer is a pointer that produces a pointer-triggered message on demand.

623. (Currently amended) The system of claim [440]~~, wherein the step of arbitrating includes censoring responsive to at least one of said user identity, group, and content~~ 572, wherein the pointer is a pointer that produces a pointer-triggered message on demand.

624. (Currently amended) The system of claim [441]~~, wherein the step of~~

Petitioner Microsoft Corporation, Ex. 1002, p. 3310

~~arbitrating includes censoring responsive to at least one of said user identity, group, and content~~ 573, wherein the pointer is a pointer that produces a pointer-triggered message on demand.

625. (Currently amended) The system of claim [442]~~, wherein the step of arbitrating includes censoring responsive to at least one of said user identity, group, and content~~ 574, wherein the pointer is a pointer that produces a pointer-triggered message on demand.

626. (Currently amended) The system of claim [443]~~, wherein the step of arbitrating includes censoring responsive to at least one of said user identity, group, and content~~ 576, wherein the pointer is a pointer that produces a pointer-triggered message on demand.

627. (Currently amended) The system of claim [444]~~, wherein the step of arbitrating includes censoring responsive to at least one of said user identity, group, and content~~ 577, wherein the data represents a pointer that produces a pointer-triggered message on demand.

628. (Currently amended) The system of claim [445]~~, wherein the step of arbitrating includes censoring responsive to at least one of said user identity, group, and content~~ 578, wherein the data represents a pointer that produces a pointer-triggered message on demand.

629. (Currently amended) The system of claim [446]~~, wherein the step of arbitrating includes censoring responsive to at least one of said user identity, group, and content~~ 579, wherein the data represents a pointer that produces a pointer-triggered message on demand.

630. (Currently amended) The system of claim [447]~~, wherein the step of arbitrating includes censoring responsive to at least one of said user identity, group, and content~~

Petitioner Microsoft Corporation, Ex. 1002, p. 3311

580, wherein the data represents a pointer that produces a pointer-triggered message on demand.

631. (Currently amended) The ~~system of claim 448, wherein the step of arbitrating includes censoring responsive to at least one of said user identity, group, and content~~ method of claim 165, further including:

determining that the pointer is not censored.

632. (Currently amended) The ~~system of claim 449, wherein the step of arbitrating includes censoring responsive to at least one of said user identity, group, and content~~ method of claim 165, further including:

determining that the message is not censored.

633. (Currently amended) The ~~system of claim 450, wherein the step of arbitrating includes censoring responsive to at least one of said user identity, group, and content~~ method of claim 165, wherein the pointer is a pointer that causes the communication to be produced on demand.

634. (Currently amended) The ~~system of claim 451, wherein the step of arbitrating includes censoring responsive to at least one of said user identity, group, and content~~ method of claim 165, wherein the communication includes data representing video.

635. (Currently amended) The ~~system of claim 452, wherein the step of arbitrating includes censoring responsive to at least one of said user identity, group, and content~~ method of claim 165, wherein the communication includes data representing sound.

Petitioner Microsoft Corporation, Ex. 1002, p. 3312

636. (Currently amended) The ~~system of claim 453, wherein the step of arbitrating includes censoring responsive to at least one of said user identity, group, and content~~ method of claim 165, wherein the communication includes data representing sound and video.

637. (Currently amended) The ~~system of claim 454, wherein the step of arbitrating includes censoring responsive to at least one of said user identity, group, and content~~ method of claim 165, wherein the communication includes data representing sound, and the sound includes a human communication of sound.

638. (Currently amended) The ~~system of claim 455, wherein the step of arbitrating includes censoring responsive to at least one of said user identity, group, and content~~ method of claim 165, wherein the message includes data representing at least one of text or ascii.

639. (Currently amended) The ~~system of claim 456, wherein the step of arbitrating includes censoring responsive to at least one of said user identity, group, and content~~ method of claim 165, wherein the communication includes data representing a member-associated image.

640. (Currently amended) The ~~system of claim 457, wherein the step of arbitrating includes censoring responsive to at least one of said user identity, group, and content~~ method of claim 165, further including forming a chat channel via the Internet network, between at least two of the plurality of computers.

641. (Currently amended) The ~~system of claim 458, wherein the step of arbitrating includes censoring responsive to at least one of said user identity, group, and content~~

Petitioner Microsoft Corporation, Ex. 1002, p. 3313

method of claim 165, wherein at least one of the communicating steps includes communicating a message as an out-of-band communication.

642. (Currently amended) The ~~system of claim 459, wherein the step of arbitrating includes censoring responsive to at least one of said user identity, group, and content~~ method of claim 165, further including:

determining a user age corresponding to each of the user identities.

643. (Currently amended) The ~~system of claim 460, wherein the step of arbitrating includes censoring responsive to at least one of said user identity, group, and content~~ method of claim 642, wherein the communication includes data representing sound.

644. (Currently amended) The ~~system of claim 461, wherein the step of arbitrating includes censoring responsive to at least one of said user identity, group, and content~~ method of claim 642, wherein the communication includes data representing video.

645. (Currently amended) The ~~system of claim 462, wherein the step of arbitrating includes censoring responsive to at least one of said user identity, group, and content~~ method of claim 642, wherein the communication includes data representing sound and video.

646. (Currently amended) The ~~system of claim 463, wherein the step of arbitrating includes censoring responsive to at least one of said user identity, group, and content~~ method system of claim 642, wherein the communication includes data representing sound, and the sound includes a human communication of sound.

Petitioner Microsoft Corporation, Ex. 1002, p. 3314

647. (Currently amended) The ~~system of claim 464, wherein the step of arbitrating includes censoring responsive to at least one of said user identity, group, and content~~ method of claim 642, wherein the message includes data representing at least one of text or ascii.

648. (Currently amended) The system of claim ~~465, wherein the step of arbitrating includes censoring responsive to at least one of said user identity, group, and content~~ 599, wherein the computer system is further programmed to determine that the pointer is not censored.

649. (Currently amended) The system of claim ~~466, wherein the step of arbitrating includes censoring responsive to at least one of said user identity, group, and content~~ 599, wherein the computer system is further programmed to determine that the message is not censored.

650. (Currently amended) The system of claim ~~435, wherein the step of arbitrating includes:~~

~~authorizing, with said controller computer, invisible viewing of some of the communications~~ 599, wherein the pointer produces the communication on demand.

651. (Currently amended) The system of claim ~~436, wherein the step of arbitrating includes:~~

~~authorizing, with said controller computer, invisible viewing of some of the communications~~ 599, wherein the communication includes data representing video.

652. (Currently amended) The system of claim ~~437, wherein the step of~~

Petitioner Microsoft Corporation, Ex. 1002, p. 3315

~~arbitrating includes:~~

~~authorizing, with said controller computer, invisible viewing of some of the communications~~ 599, wherein the communication includes data representing sound.

653. (Currently amended) The system of claim ~~438, wherein the step of arbitrating includes:~~

~~authorizing, with said controller computer, invisible viewing of some of the communications~~ 599, wherein the communication includes data representing sound and video.

654. (Currently amended) The system of claim ~~439, wherein the step of arbitrating includes:~~

~~authorizing, with said controller computer, invisible viewing of some of the communications~~ 599, wherein the communication includes data representing sound, and the sound includes a human communication of sound.

655. (Currently amended) The system of claim [440]~~, wherein the step of arbitrating includes:~~

~~authorizing, with said controller computer, invisible viewing of some of the communications~~ 599, wherein the message includes data representing at least one of text or ascii..

656. (Currently amended) The system of claim [441]~~, wherein the step of arbitrating includes:~~

~~authorizing, with said controller computer, invisible viewing of some of the communications~~ 599, wherein the communication includes data representing a member-associated image.

Petitioner Microsoft Corporation, Ex. 1002, p. 3316

657. (Currently amended) The system of claim [442]~~, wherein the step of arbitrating includes:~~

~~authorizing, with said controller computer, invisible viewing of some of the communications~~ 599, wherein the computer system is further programmed to form a chat channel via the Internet network, between at least two of the plurality of computers.

658. (Currently amended) The system of claim [443]~~, wherein the step of arbitrating includes:~~

~~authorizing, with said controller computer, invisible viewing of some of the communications~~ 599, wherein the computer system is further programmed to communicate the message as an out-of-band communication message.

659. (Currently amended) The system of claim [444]~~, wherein the step of arbitrating includes:~~

~~authorizing, with said controller computer, invisible viewing of some of the communications~~ 599, wherein the computer system is further programmed to determine a user age corresponding to each of the user identities.

660. (Currently amended) The system of claim [445]~~, wherein the step of arbitrating includes:~~

~~authorizing, with said controller computer, invisible viewing of some of the communications~~ 659, wherein the communication includes data representing sound.

661. (Currently amended) The system of claim [446]~~, wherein the step of~~

Petitioner Microsoft Corporation, Ex. 1002, p. 3317

~~arbitrating includes:~~

~~authorizing, with said controller computer, invisible viewing of some of the communications~~ 659, wherein the communication includes data representing video.

662. (Currently amended) The system of claim [447], ~~wherein the step of arbitrating includes:~~

~~authorizing, with said controller computer, invisible viewing of some of the communications~~ 659, wherein the communication includes data representing sound and video.

663. (Currently amended) The system of claim [448], ~~wherein the step of arbitrating includes:~~

~~authorizing, with said controller computer, invisible viewing of some of the communications~~ 659, wherein the communication includes data representing sound, and the sound includes a human communication of sound.

664. (Currently amended) The system of claim [449], ~~wherein the step of arbitrating includes:~~

~~authorizing, with said controller computer, invisible viewing of some of the communications~~ 659, wherein the message includes data representing at least one of text or ascii.

665. (Currently amended) The ~~system of claim 450, wherein the step of arbitrating includes:~~

~~authorizing, with said controller computer, invisible viewing of some of the communications~~ method of claim 917, further including:

determining whether the pointer is not censored.

Petitioner Microsoft Corporation, Ex. 1002, p. 3318

666. (Currently amended) The ~~system of claim 451, wherein the step of arbitrating includes:~~

~~authorizing, with said controller computer, invisible viewing of some of the communications~~ method of claim 917, further including determining a user age corresponding to each of the user identities.

667. (Currently amended) The ~~system of claim 452, wherein the step of arbitrating includes:~~

~~authorizing, with said controller computer, invisible viewing of some of the communications~~ method of claim 666, further including:

determining whether the data is not censored.

668. (Currently amended) The ~~system of claim 453, wherein the step of arbitrating includes:~~

~~authorizing, with said controller computer, invisible viewing of some of the communications~~ method of claim 917, wherein the pointer produces the communication on demand.

669. (Currently amended) The ~~system of claim 454, wherein the step of arbitrating includes:~~

~~authorizing, with said controller computer, invisible viewing of some of the communications~~ method of claim 917, wherein the communication includes data representing video.

Petitioner Microsoft Corporation, Ex. 1002, p. 3319

670. (Currently amended) The ~~system of claim 455, wherein the step of arbitrating includes:~~

~~authorizing, with said controller computer, invisible viewing of some of the communications~~ method of claim 917, wherein the communication includes data representing sound.

671. (Currently amended) The ~~system of claim 456, wherein the step of arbitrating includes:~~

~~authorizing, with said controller computer, invisible viewing of some of the communications~~ method of claim 917, wherein the communication includes data representing sound and video.

672. (Currently amended) The ~~system of claim 457, wherein the step of arbitrating includes:~~

~~authorizing, with said controller computer, invisible viewing of some of the communications~~ method of claim 917, wherein the communication includes data representing sound, and the sound includes a human communication of sound.

673. (Currently amended) The ~~system of claim 458, wherein the step of arbitrating includes:~~

~~authorizing, with said controller computer, invisible viewing of some of the communications~~ method of claim 917, wherein the communication includes data representing a member-associated image.

674. (Currently amended) The ~~system of claim 459, wherein the step of~~

Petitioner Microsoft Corporation, Ex. 1002, p. 3320

~~arbitrating includes:~~

~~authorizing, with said controller computer, invisible viewing of some of the communications~~ method of claim 917, further including allowing chat communication in real time via the Internet network.

675. (Currently amended) The ~~system of claim 460, wherein the step of arbitrating includes:~~

~~authorizing, with said controller computer, invisible viewing of some of the communications~~ method of claim 917, further including communicating an out-of-band communication from the computer system to at least one of the plurality of computers.

676. (Currently amended) The ~~system of claim 461, wherein the step of arbitrating includes:~~

~~authorizing, with said controller computer, invisible viewing of some of the communications~~ method of claim 917, further including communicating an asynchronous communication from the computer system to at least one of the plurality of computers.

677. (Currently amended) The ~~system of claim 462, wherein the step of arbitrating includes:~~

~~authorizing, with said controller computer, invisible viewing of some of the communications~~ method of claim 917, wherein the step of receiving the communication includes receiving a synchronous communication.

678. (Currently amended) The ~~system of claim 463, wherein the step of arbitrating includes:~~

Petitioner Microsoft Corporation, Ex. 1002, p. 3321

~~authorizing, with said controller computer, invisible viewing of some of the communications~~ method of claim 677, wherein the communication includes data representing sound.

679. (Currently amended) The ~~system of claim 464, wherein the step of arbitrating includes:~~

~~authorizing, with said controller computer, invisible viewing of some of the communications~~ method of claim 677, wherein the communication includes data representing video.

680. (Currently amended) The ~~system of claim 465, wherein the step of arbitrating includes:~~

~~authorizing, with said controller computer, invisible viewing of some of the communications~~ method of claim 677, wherein the communication includes data representing sound and video.

681. (Currently amended) The ~~system of claim 466, wherein the step of arbitrating includes:~~

~~authorizing, with said controller computer, invisible viewing of some of the communications~~ method of claim 677, wherein the communication includes data representing sound, and the sound includes a human communication of sound.

682. (Currently amended) The ~~system of claim 435, wherein the step of arbitrating includes:~~

~~providing private, real-time communication over the Internet network, with said~~

Petitioner Microsoft Corporation, Ex. 1002, p. 3322

~~controller computer, between some of the group~~ method of claim 677, wherein the communication further includes data representing a member-associated image.

683. (Currently amended) The ~~system of claim 436, wherein the step of arbitrating includes:~~

~~providing private, real time communication over the Internet network, with said controller computer, between some of the group~~ method of claim 677, further including communicating an out-of-band communication from the computer system to at least one of the plurality of computers.

684. (Currently amended) The ~~system of claim 437, wherein the step of arbitrating includes:~~

~~providing private, real time communication over the Internet network, with said controller computer, between some of the group~~ method of claim 677, further including communicating an asynchronous communication from the computer system to at least one of the plurality of computers.

685. (Currently amended) The system of claim ~~438, wherein the step of arbitrating includes:~~

~~providing private, real time communication over the Internet network, with said controller computer, between some of the group~~ 918, wherein the computer system is further programmed to determine whether the pointer is censored.

686. (Currently amended) The system of claim ~~439, wherein the step of arbitrating includes:~~

Petitioner Microsoft Corporation, Ex. 1002, p. 3323

~~providing private, real time communication over the Internet network, with said controller computer, between some of the group~~ 918, wherein the computer system is further programmed to determine whether the data is censored.

687. (Currently amended) The system of claim [440]~~, wherein the step of arbitrating includes:~~

~~providing private, real time communication over the Internet network, with said controller computer, between some of the group~~ 918, wherein the pointer produces the communication on demand.

688. (Currently amended) The system of claim [441]~~, wherein the step of arbitrating includes:~~

~~providing private, real time communication over the Internet network, with said controller computer, between some of the group~~ 918, wherein the communication includes data representing video.

689. (Currently amended) The system of claim [442]~~, wherein the step of arbitrating includes:~~

~~providing private, real time communication over the Internet network, with said controller computer, between some of the group~~ 918, wherein the communication includes data representing sound.

690. (Currently amended) The system of claim [443]~~, wherein the step of arbitrating includes:~~

~~providing private, real time communication over the Internet network, with said~~

Petitioner Microsoft Corporation, Ex. 1002, p. 3324

~~controller computer, between some of the group~~ 918, wherein the communication includes data representing sound and video.

691. (Currently amended) The system of claim [444]~~, wherein the step of arbitrating includes:~~

~~providing private, real time communication over the Internet network, with said controller computer, between some of the group~~ 918, wherein the communication includes data representing sound, and the sound includes a human communication of sound.

692. (Currently amended) The system of claim [445]~~, wherein the step of arbitrating includes:~~

~~providing private, real time communication over the Internet network, with said controller computer, between some of the group~~ 918, wherein the first computer is further programmed to communicate with the pointer data representing at least one of text or asci.

693. (Currently amended) The system of claim [446]~~, wherein the step of arbitrating includes:~~

~~providing private, real time communication over the Internet network, with said controller computer, between some of the group~~ 918, wherein the data includes data representing a member-associated image.

694. (Currently amended) The system of claim [447]~~, wherein the step of arbitrating includes:~~

~~providing private, real time communication over the Internet network, with said controller computer, between some of the group~~ 918, wherein the computer system is further

Petitioner Microsoft Corporation, Ex. 1002, p. 3325

programmed to allow chat communication for sending user messages, and receiving the user messages in real time via the Internet network.

695. (Currently amended) The system of claim [448]~~, wherein the step of arbitrating includes:~~

~~providing private, real time communication over the Internet network, with said controller computer, between some of the group~~918, wherein the computer system is further programmed to communicate out-of-band communication.

696. (Currently amended) The system of claim [449]~~, wherein the step of arbitrating includes:~~

~~providing private, real time communication over the Internet network, with said controller computer, between some of the group~~ 918, wherein the communication comprises an asynchronous communication.

697. (Currently amended) The system of claim [450]~~, wherein the step of arbitrating includes:~~

~~providing private, real time communication over the Internet network, with said controller computer, between some of the group~~ 696, wherein the communication includes data representing sound.

698. (Currently amended) The system of claim [451]~~, wherein the step of arbitrating includes:~~

~~providing private, real time communication over the Internet network, with said controller computer, between some of the group~~ 696, wherein the communication includes data

Petitioner Microsoft Corporation, Ex. 1002, p. 3326

representing video.

699. (Currently amended) The system of claim [452], ~~wherein the step of arbitrating includes:~~

~~providing private, real-time communication over the Internet network, with said controller computer, between some of the group~~ 696, wherein the communication includes data representing sound and video.

700. (Currently amended) The system of claim [453], ~~wherein the step of arbitrating includes:~~

~~providing private, real-time communication over the Internet network, with said controller computer, between some of the group~~ 696, wherein the communication includes data representing sound, and the sound includes a human communication of sound.

701. (Currently amended) The system of claim [454], ~~wherein the step of arbitrating includes:~~

~~providing private, real-time communication over the Internet network, with said controller computer, between some of the group~~ 696, wherein the communication comprises an asynchronous communication.

702. (Currently amended) The ~~system of claim 455, wherein the step of arbitrating includes:~~

~~providing private, real-time communication over the Internet network, with said controller computer, between some of the group~~ method of claim 409, further including

determining a user's age corresponding to at least one of user identities.

Petitioner Microsoft Corporation, Ex. 1002, p. 3327

703. (Currently amended) The ~~system of claim 456, wherein the step of arbitrating includes:~~

~~providing private, real time communication over the Internet network, with said controller computer, between some of the group~~ method of claim 702, further including censoring an unwanted communication from at least one of the user identities.

704. (Currently amended) The ~~system of claim 457, wherein the step of arbitrating includes:~~

~~providing private, real time communication over the Internet network, with said controller computer, between some of the group~~ method of claim 703, further including determining whether a first of the user identities is censored from access to the member-associated image corresponding to a second user identity,

if the first identity is censored, not allowing access to the member-associated, and

if the first user identity is not censored, allowing access to the member associated image.

705. (Currently amended) The ~~system of claim 458, wherein the step of arbitrating includes:~~

~~providing private, real time communication over the Internet network, with said controller computer, between some of the group~~ method of claim 702, further including:

communicating, under control of said computer system, an asynchronous message from one of the plurality of computers to another of the plurality of computers.

706. (Currently amended) The ~~system of claim 459, wherein the step of~~

Petitioner Microsoft Corporation, Ex. 1002, p. 3328

~~arbitrating includes:~~

~~providing private, real time communication over the Internet network, with said controller computer, between some of the group~~ method of claim 702, wherein the receiving includes receiving chat communications within a chat group.

707. (Currently amended) The ~~system of claim 460, wherein the step of arbitrating includes:~~

~~providing private, real time communication over the Internet network, with said controller computer, between some of the group~~ method of claim 702, further including providing a private communications channel to at least some of the plurality of computers.

708. (Currently amended) The ~~system of claim 461, wherein the step of arbitrating includes:~~

~~providing private, real time communication over the Internet network, with said controller computer, between some of the group~~ method of claim 702, further including communicating data representing human communication of sound to at least some of the plurality of computers.

709. (Currently amended) The ~~system of claim 462, wherein the step of arbitrating includes:~~

~~providing private, real time communication over the Internet network, with said controller computer, between some of the group~~ method of claim 702, further including providing data representing video to at least some of the plurality of computers.

710. (Currently amended) The ~~system of claim 463, wherein the step of~~

Petitioner Microsoft Corporation, Ex. 1002, p. 3329

~~arbitrating includes:~~

~~providing private, real time communication over the Internet network, with said controller computer, between some of the group~~ method of claim 702, further including providing data representing sound to at least some of the plurality of computers.

711. (Currently amended) The ~~system of claim 464, wherein the step of arbitrating includes:~~

~~providing private, real time communication over the Internet network, with said controller computer, between some of the group~~ method of claim 702, wherein at least some of the communications include data representing text or ascii.

712. (Currently amended) The ~~system of claim 465, wherein the step of arbitrating includes:~~

~~providing private, real time communication over the Internet network, with said controller computer, between some of the group~~ method of claim 702, wherein at least some of the communications are communicated out-of-band.

713. (Currently amended) The ~~system of claim 466, wherein the step of arbitrating includes:~~

~~providing private, real time communication over the Internet network, with said controller computer, between some of the group~~ method of claim 702, wherein at least some of the communications include data representing multimedia.

714. (Currently amended) The system of claim ~~604, wherein said controller computer is further enabled to carry out the step of:~~

Petitioner Microsoft Corporation, Ex. 1002, p. 3330

~~determining a user's age corresponding to said user identity~~ 843, wherein the computer system is further programmed to determine a user age corresponding to each said user identity.

715. (Currently amended) The system of claim ~~604, wherein the step of arbitrating includes authorizing a moderator for group communications including communications between the one of the plurality of computers and the other of the plurality of computers~~ 714, wherein the computer system is further programmed to censor an unwanted communication from a member.

716. (Currently amended) The system of claim ~~604, wherein the step of arbitrating includes censoring responsive to at least one of said user identity, group, and content~~ 714, wherein the computer system is further programmed to determine whether a first of the user identities is censored from access to a member-associated image corresponding to a second of the user identities,

if the first user identity is censored, not allowing access to the member-associated, and

if the first user identity is not censored, allowing access to the member associated image.

717. (Currently amended) The system of claim ~~604, wherein the step of arbitrating includes:~~

~~authorizing, with said controller computer, invisible viewing of some of the communications~~ 714, wherein the computer system is further programmed to communicate an asynchronous message from one of the plurality of computers to another of the plurality of

Petitioner Microsoft Corporation, Ex. 1002, p. 3331

computers.

718. (Currently amended) The system of claim ~~604, wherein the step of arbitrating includes:~~

~~providing group communications capability, with said controller computer, to handle communications between the one of the plurality of computers and the other of the plurality of computers, said group communications capability including private communication window capability~~ 714, wherein the computer system is further programmed to distribute the at least some of the communications among a chat group.

719. (Currently amended) The system of claim ~~467, wherein the step of arbitrating includes authorizing a moderator for group communications including communications between the one of the plurality of computers and the other of the plurality of computers~~ 714, wherein the computer system is further programmed to provide a private communication channel to at least some of the plurality of computers.

720. (Currently amended) The system of claim ~~468, wherein the step of arbitrating includes authorizing a moderator for group communications including communications between the one of the plurality of computers and the other of the plurality of computers~~ 714, wherein the computer system is further programmed to communicate data representing human communication of sound to at least some of the plurality of computers.

721. (Currently amended) The system of claim ~~469, wherein the step of arbitrating includes authorizing a moderator for group communications including communications between the one of the plurality of computers and the other of the plurality of computers~~ 714,

Petitioner Microsoft Corporation, Ex. 1002, p. 3332

wherein the computer system is further programmed to provide data representing video to at least some of the plurality of computers.

722. (Currently amended) The system of claim [470], ~~wherein the step of arbitrating includes authorizing a moderator for group communications including communications between the one of the plurality of computers and the other of the plurality of computers~~ 714, wherein the computer system is further programmed to provide data representing video and sound to at least some of the plurality of computers.

723. (Currently amended) The system of claim [471], ~~wherein the step of arbitrating includes authorizing a moderator for group communications including communications between the one of the plurality of computers and the other of the plurality of computers~~ 714, wherein at least some of the communications include data representing text or asci.

724. (Currently amended) The system of claim [472], ~~wherein the step of arbitrating includes authorizing a moderator for group communications including communications between the one of the plurality of computers and the other of the plurality of computers~~ 714, wherein the computer system is further programmed to communicate out-of-band communication.

725. (Currently amended) The system of claim [473], ~~wherein the step of arbitrating includes authorizing a moderator for group communications including communications between the one of the plurality of computers and the other of the plurality of computers~~ 714, wherein at least some of the communications include multimedia.

726. (Currently amended) The ~~system of claim 474, wherein the step of~~

Petitioner Microsoft Corporation, Ex. 1002, p. 3333

~~arbitrating includes authorizing a moderator for group communications including communications between the one of the plurality of computers and the other of the plurality of computers~~ method of claim 884, wherein at least one of the communications includes data representing sound.

727. (Currently amended) The ~~system of claim 475, wherein the step of arbitrating includes authorizing a moderator for group communications including communications between the one of the plurality of computers and the other of the plurality of computers~~ method of claim 884, wherein at least one of the communications includes data representing video.

728. (Currently amended) The ~~system of claim 476, wherein the step of arbitrating includes authorizing a moderator for group communications including communications between the one of the plurality of computers and the other of the plurality of computers~~ method of claim 884, wherein at least one of the communications includes data representing sound and video.

729. (Currently amended) The ~~system of claim 477, wherein the step of arbitrating includes authorizing a moderator for group communications including communications between the one of the plurality of computers and the other of the plurality of computers~~ method of claim 884, further including:

storing, for the first user identity, an authorization associated with presentation of graphical multimedia; and

based on the authorization, presenting the graphical multimedia at one of the plurality of computers corresponding to the second user identity.

730. (Currently amended) The ~~system of claim 478, wherein the step of~~

Petitioner Microsoft Corporation, Ex. 1002, p. 3334

~~arbitrating includes authorizing a moderator for group communications including communications between the one of the plurality of computers and the other of the plurality of computers~~ method of claim 726, further including:

storing, for the first user identity, an authorization associated with presentation of graphical multimedia; and

based on the authorization, presenting the graphical multimedia at one of the plurality of computers corresponding to the second user identity.

731. (Currently amended) The ~~system of claim 479, wherein the step of arbitrating includes authorizing a moderator for group communications including communications between the one of the plurality of computers and the other of the plurality of computers~~ method of claim 727, further including:

storing, for the first user identity, an authorization associated with presentation of graphical multimedia; and

based on the authorization, presenting the graphical multimedia at one of the plurality of computers corresponding to the second user identity.

732. (Currently amended) The ~~system of claim 480, wherein the step of arbitrating includes authorizing a moderator for group communications including communications between the one of the plurality of computers and the other of the plurality of computers~~ method of claim 884 based on the authorization, presenting the graphical multimedia data at the output device corresponding to the second user identity wherein one of the determining steps includes determining whether a parameter corresponding to the first user identity has been determined by a user corresponding to another of the user identities.

Petitioner Microsoft Corporation, Ex. 1002, p. 3335

733. (Currently amended) The ~~system of claim 481, wherein the step of arbitrating includes authorizing a moderator for group communications including communications between the one of the plurality of computers and the other of the plurality of computers~~ method of claim 729, wherein the graphical data includes graphical multimedia data.

734. (Currently amended) The ~~system of claim 482, wherein the step of arbitrating includes authorizing a moderator for group communications including communications between the one of the plurality of computers and the other of the plurality of computers~~ method of claim 885, wherein at least one of the communications includes data representing sound.

735. (Currently amended) The ~~system of claim 483, wherein the step of arbitrating includes authorizing a moderator for group communications including communications between the one of the plurality of computers and the other of the plurality of computers~~ method of claim 885, wherein at least one of the communications includes data representing video.

736. (Currently amended) The ~~system of claim 484, wherein the step of arbitrating includes authorizing a moderator for group communications including communications between the one of the plurality of computers and the other of the plurality of computers~~ method of claim 885, wherein at least one of the communications includes data representing sound and video.

737. (Currently amended) The ~~system of claim 485, wherein the step of arbitrating includes authorizing a moderator for group communications including communications between the one of the plurality of computers and the other of the plurality of computers~~ method of claim 885, further including:

Petitioner Microsoft Corporation, Ex. 1002, p. 3336

storing, for the first user identity, an authorization associated with presentation of graphical multimedia; and

based on the authorization, presenting the graphical multimedia at one of the plurality of computers corresponding to the second user identity.

738. (Currently amended) The ~~system of claim 486, wherein the step of arbitrating includes authorizing a moderator for group communications including communications between the one of the plurality of computers and the other of the plurality of computers~~ method of claim 734, further including:

storing, for the first user identity, an authorization associated with presentation of graphical multimedia; and

based on the authorization, presenting the graphical multimedia at one of the plurality of computers corresponding to the second user identity.

739. (Currently amended) The ~~system of claim 487, wherein the step of arbitrating includes authorizing a moderator for group communications including communications between the one of the plurality of computers and the other of the plurality of computers~~ method of claim 735, further including:

storing, for the first user identity, an authorization associated with presentation of graphical multimedia; and

based on the authorization, presenting the graphical multimedia at one of the plurality of computers corresponding to the second user identity.

740. (Currently amended) The ~~system of claim 488, wherein the step of arbitrating includes authorizing a moderator for group communications including communications~~

Petitioner Microsoft Corporation, Ex. 1002, p. 3337

~~between the one of the plurality of computers and the other of the plurality of computers~~ method of claim 736, further including:

storing, for the first user identity, an authorization associated with presentation of graphical data; and

based on the authorization, presenting the graphical data at one of the plurality of computers corresponding to the second user identity.

741. (Currently amended) The system of claim [489], ~~wherein the step of arbitrating includes authorizing a moderator for group communications including communications between the one of the plurality of computers and the other of the plurality of computers~~ 891, wherein at least one of the communications includes data representing sound.

742. (Currently amended) The system of claim [490], ~~wherein the step of arbitrating includes authorizing a moderator for group communications including communications between the one of the plurality of computers and the other of the plurality of computers~~ 891, wherein at least one of the communications includes data representing video.

743. (Currently amended) The system of claim [491], ~~wherein the step of arbitrating includes authorizing a moderator for group communications including communications between the one of the plurality of computers and the other of the plurality of computers~~ 891, wherein at least one of the communications includes data representing sound and video.

744. (Currently amended) The system of claim [492], ~~wherein the step of arbitrating includes authorizing a moderator for group communications including communications between the one of the plurality of computers and the other of the plurality of computers~~ 891,

Petitioner Microsoft Corporation, Ex. 1002, p. 3338

wherein the computer system is further programmed to provide the computer corresponding to the first user identity with access to a member-associated image corresponding to the second user identity.

745. (Currently amended) The system of claim [493], ~~wherein the step of arbitrating includes authorizing a moderator for group communications including communications between the one of the plurality of computers and the other of the plurality of computers~~ 741, wherein the computer system is further programmed to provide the computer corresponding to the first user identity with access to a member-associated image corresponding to the second user identity.

746. (Currently amended) The system of claim [494], ~~wherein the step of arbitrating includes authorizing a moderator for group communications including communications between the one of the plurality of computers and the other of the plurality of computers~~ 742, wherein the computer system is further programmed to provide the computer corresponding to the first user identity with access to a member-associated image corresponding to the second user identity.

747. (Currently amended) The system of claim [495], ~~wherein the step of arbitrating includes authorizing a moderator for group communications including communications between the one of the plurality of computers and the other of the plurality of computers~~ 743, wherein the computer system is further programmed to provide the computer corresponding to the first user identity with access to a member-associated image corresponding to the second user identity.

Petitioner Microsoft Corporation, Ex. 1002, p. 3339

748. (Currently amended) The system of claim [496]~~, wherein the step of arbitrating includes authorizing a moderator for group communications including communications between the one of the plurality of computers and the other of the plurality of computers~~ 892, wherein at least one of the communications includes data representing sound.

749. (Currently amended) The system of claim [497]~~, wherein the step of arbitrating includes authorizing a moderator for group communications including communications between the one of the plurality of computers and the other of the plurality of computers~~ 892, wherein at least one of the communications includes data representing video.

750. (Currently amended) The system of claim [467]~~, wherein the step of arbitrating includes censoring responsive to at least one of said user identity, group, and content~~ 892, wherein at least one of the communications includes data representing sound and video.

751. (Currently amended) The system of claim [468]~~, wherein the step of arbitrating includes censoring responsive to at least one of said user identity, group, and content~~ 892, wherein the computer system is further programmed to provide the computer corresponding to the first user identity with access to a member-associated image corresponding to the second user identity.

752. (Currently amended) The system of claim [469]~~, wherein the step of arbitrating includes censoring responsive to at least one of said user identity, group, and content~~ 748, wherein the computer system is further programmed to provide the computer corresponding to the first user identity with access to a member-associated image corresponding to the second user identity.

Petitioner Microsoft Corporation, Ex. 1002, p. 3340

753. (Currently amended) The system of claim [470]~~, wherein the step of arbitrating includes censoring responsive to at least one of said user identity, group, and content~~ 749, wherein the computer system is further programmed to provide the computer corresponding to the first user identity with access to a member-associated image corresponding to the second user identity.

754. (Currently amended) The system of claim [471]~~, wherein the step of arbitrating includes censoring responsive to at least one of said user identity, group, and content~~ 750, wherein the computer system is further programmed to provide the computer corresponding to the first user identity with access to a member-associated image corresponding to the second user identity.

755. (Currently amended) The ~~system of claim 472, wherein the step of arbitrating includes censoring responsive to at least one of said user identity, group, and content~~ method of claim 893, wherein at least one of the multimedia messages includes data representing sound.

756. (Currently amended) The ~~system of claim 473, wherein the step of arbitrating includes censoring responsive to at least one of said user identity, group, and content~~ method of claim 893, wherein at least one of the multimedia messages includes data representing video.

757. (Currently amended) The ~~system of claim 474, wherein the step of arbitrating includes censoring responsive to at least one of said user identity, group, and content~~ method of claim 893, wherein at least one of the multimedia messages includes data representing sound and video.

Petitioner Microsoft Corporation, Ex. 1002, p. 3341

758. (Currently amended) The ~~system of claim 475, wherein the step of arbitrating includes censoring responsive to at least one of said user identity, group, and content~~ method of claim 893, further including:

storing, for the first user identity, an authorization associated with presentation of graphical multimedia; and

based on the authorization, presenting the graphical multimedia at one of the plurality of computers corresponding to the second user identity.

759. (Currently amended) The ~~system of claim 476, wherein the step of arbitrating includes censoring responsive to at least one of said user identity, group, and content~~ method of claim 755, further including:

storing, for the first user identity, an authorization associated with presentation of graphical multimedia; and

based on the authorization, presenting the graphical multimedia at one of the plurality of computers corresponding to the second user identity.

760. (Currently amended) The ~~system of claim 477, wherein the step of arbitrating includes censoring responsive to at least one of said user identity, group, and content~~ method of claim 756, further including:

storing, for the first user identity, an authorization associated with presentation of graphical multimedia; and

based on the authorization, presenting the graphical multimedia at one of the plurality of computers corresponding to the second user identity.

Petitioner Microsoft Corporation, Ex. 1002, p. 3342

761. (Currently amended) The ~~system of claim 478, wherein the step of arbitrating includes censoring responsive to at least one of said user identity, group, and content~~ method of claim 757, further including:

storing, for the first user identity, an authorization associated with presentation of graphical multimedia; and

based on the authorization, presenting the graphical multimedia at one of the plurality of computers corresponding to the second user identity.

762. (Currently amended) The ~~system of claim 479, wherein the step of arbitrating includes censoring responsive to at least one of said user identity, group, and content~~ method of claim 894, wherein the data includes data representing sound.

763. (Currently amended) The ~~system of claim 480, wherein the step of arbitrating includes censoring responsive to at least one of said user identity, group, and content~~ method of claim 894, wherein the data includes data representing video.

764. (Currently amended) The ~~system of claim 481, wherein the step of arbitrating includes censoring responsive to at least one of said user identity, group, and content~~ method of claim 894, the data includes data representing sound and video.

765. (Currently amended) The ~~system of claim 482, wherein the step of arbitrating includes censoring responsive to at least one of said user identity, group, and content~~ method of claim 894, further including:

storing, for the first user identity, an authorization associated with presentation of graphical multimedia; and

Petitioner Microsoft Corporation, Ex. 1002, p. 3343

based on the authorization, presenting the graphical multimedia at one of the plurality of computers corresponding to the second user identity.

766. (Currently amended) The ~~system of claim 483, wherein the step of arbitrating includes censoring responsive to at least one of said user identity, group, and content~~ method of claim 762, further including:

storing, for the first user identity, an authorization associated with presentation of graphical multimedia; and

based on the authorization, presenting the graphical multimedia at one of the plurality of computers corresponding to the second user identity.

767. (Currently amended) The ~~system of claim 484, wherein the step of arbitrating includes censoring responsive to at least one of said user identity, group, and content~~ method of claim 763, further including:

storing, for the first user identity, an authorization associated with presentation of graphical multimedia; and

based on the authorization, presenting the graphical multimedia at one of the plurality of computers corresponding to the second user identity.

768. (Currently amended) The ~~system of claim 485, wherein the step of arbitrating includes censoring responsive to at least one of said user identity, group, and content~~ method of claim 764, further including:

storing, for the first user identity, an authorization associated with presentation of graphical multimedia; and

based on the authorization, presenting the graphical multimedia at one of the

Petitioner Microsoft Corporation, Ex. 1002, p. 3344

plurality of computers corresponding to the second user identity.

769. (Currently amended) The system of claim [486], ~~wherein the step of arbitrating includes censoring responsive to at least one of said user identity, group, and content~~ 895, wherein at least one of the communications includes data representing sound.

770. (Currently amended) The system of claim [487], ~~wherein the step of arbitrating includes censoring responsive to at least one of said user identity, group, and content~~ 895, wherein at least one of the communications includes data representing video.

771. (Currently amended) The system of claim [[488]], ~~wherein the step of arbitrating includes censoring responsive to at least one of said user identity, group, and content~~ 895, wherein at least one of the communications includes data representing sound and video.

772. (Currently amended) The system of claim [[489]], ~~wherein the step of arbitrating includes censoring responsive to at least one of said user identity, group, and content~~ 895, wherein the computer system is further programmed to provide the computer corresponding to the first user identity with access to a member-associated image corresponding to the second user identity.

773. (Currently amended) The system of claim [[490]], ~~wherein the step of arbitrating includes censoring responsive to at least one of said user identity, group, and content~~ 769, wherein the computer system is further programmed to provide the computer corresponding to the first user identity with access to a member-associated image corresponding to the second user identity.

Petitioner Microsoft Corporation, Ex. 1002, p. 3345

774. (Currently amended) The system of claim [[491]], ~~wherein the step of arbitrating includes censoring responsive to at least one of said user identity, group, and content~~ 770, wherein the computer system is further programmed to provide the computer corresponding to the first user identity with access to a member-associated image corresponding to the second user identity.

775. (Currently amended) The system of claim [[492]], ~~wherein the step of arbitrating includes censoring responsive to at least one of said user identity, group, and content~~ 771, wherein the computer system is further programmed to provide the computer corresponding to the first user identity with access to a member-associated image corresponding to the second user identity.

776. (Currently amended) The system of claim [[493]], ~~wherein the step of arbitrating includes censoring responsive to at least one of said user identity, group, and content~~ 896, wherein at least one of the communications includes data representing sound.

777. (Currently amended) The system of claim [[494]], ~~wherein the step of arbitrating includes censoring responsive to at least one of said user identity, group, and content~~ 896, wherein at least one of the communications includes data representing video.

778. (Currently amended) The system of claim [[495]], ~~wherein the step of arbitrating includes censoring responsive to at least one of said user identity, group, and content~~ 896, wherein at least one of the communications includes data representing sound and video.

Petitioner Microsoft Corporation, Ex. 1002, p. 3346

779. (Currently amended) The system of claim [[496]], ~~wherein the step of arbitrating includes censoring responsive to at least one of said user identity, group, and content~~ 896, wherein the computer system is further programmed to:

store, for the first user identity, an authorization associated with presentation of graphical data; and

based on the authorization, present the graphical data at one of the plurality of computers corresponding to the second user identity.

780. (Currently amended) The system of claim [[497]], ~~wherein the step of arbitrating includes censoring responsive to at least one of said user identity, group, and content~~ 776, wherein the computer system is further programmed to:

store, for the first user identity, an authorization associated with presentation of graphical data; and

based on the authorization, present the graphical data at one of the plurality of computers corresponding to the second user identity.

781. (Currently amended) The system of claim [[467]], ~~wherein the step of arbitrating includes:~~

~~authorizing, with said controller computer, invisible viewing of some of the communications~~ 777, wherein the computer system is further programmed to:

store, for the first user identity, an authorization associated with presentation of graphical data; and

based on the authorization, present the graphical data at one of the plurality of computers corresponding to the second user identity.

Petitioner Microsoft Corporation, Ex. 1002, p. 3347

782. (Currently amended) The system of claim [[468]]~~, wherein the step of arbitrating includes:~~

~~authorizing, with said controller computer, invisible viewing of some of the communications~~ 778, wherein the computer system is further programmed to:

store, for the first user identity, an authorization associated with presentation of graphical data; and

based on the authorization, present the graphical data at one of the plurality of computers corresponding to the second user identity.

783. (Currently amended) The system of claim [[469]]~~, wherein the step of arbitrating includes:~~

~~authorizing, with said controller computer, invisible viewing of some of the communications~~ 871, wherein the computer system is programmed to allow the plurality of computers to communicate a type of data representing at least one of a pointer, video, audio, a graphic, or multimedia, the pointer being a pointer that produces a pointer-triggered message on demand.

784. (Currently amended) The system of claim [[470]]~~, wherein the step of arbitrating includes:~~

~~authorizing, with said controller computer, invisible viewing of some of the communications~~ 783, wherein the type of data represents a pointer.

785. (Currently amended) The system of claim [[471]]~~, wherein the step of arbitrating includes:~~

~~authorizing, with said controller computer, invisible viewing of some of the~~

Petitioner Microsoft Corporation, Ex. 1002, p. 3348

~~communications~~ 783, wherein the type of data represents audio.

786. (Currently amended) The system of claim [[472]], ~~wherein the step of arbitrating includes:~~

~~authorizing, with said controller computer, invisible viewing of some of the communications~~ 783, wherein the type of data represents video.

787. (Currently amended) The system of claim [[473]], ~~wherein the step of arbitrating includes:~~

~~authorizing, with said controller computer, invisible viewing of some of the communications~~ 783, wherein the type of data represents a graphic.

788. (Currently amended) The system of claim [[474]], ~~wherein the step of arbitrating includes:~~

~~authorizing, with said controller computer, invisible viewing of some of the communications~~ 783, wherein the type of data represents multimedia.

789. (Currently amended) The system of claim [[475]], ~~wherein the step of arbitrating includes:~~

~~authorizing, with said controller computer, invisible viewing of some of the communications~~ 783, wherein the type of data represents a pointer and audio.

790. (Currently amended) The system of claim [[476]], ~~wherein the step of arbitrating includes:~~

~~authorizing, with said controller computer, invisible viewing of some of the~~

Petitioner Microsoft Corporation, Ex. 1002, p. 3349

~~communications~~ 783, wherein the type of data represents a pointer and video.

791. (Currently amended) The system of claim [[477]]~~, wherein the step of arbitrating includes:~~

~~authorizing, with said controller computer, invisible viewing of some of the communications~~ 783, wherein the type of data represents a pointer and a graphic.

792. (Currently amended) The system of claim [[478]]~~, wherein the step of arbitrating includes:~~

~~authorizing, with said controller computer, invisible viewing of some of the communications~~ 783, wherein the type of data represents audio and video.

793. (Currently amended) The system of claim [[479]]~~, wherein the step of arbitrating includes:~~

~~authorizing, with said controller computer, invisible viewing of some of the communications~~ 783, wherein the type of data represents audio and a graphic.

794. (Currently amended) The system of claim [[480]]~~, wherein the step of arbitrating includes:~~

~~authorizing, with said controller computer, invisible viewing of some of the communications~~ 783, wherein the type of data represents video and a graphic.

795. (Currently amended) The system of claim [[481]]~~, wherein the step of arbitrating includes:~~

~~authorizing, with said controller computer, invisible viewing of some of the~~

Petitioner Microsoft Corporation, Ex. 1002, p. 3350

~~communications~~ 783, wherein the type of data represents a pointer and audio and video.

796. (Currently amended) The system of claim [[482]], ~~wherein the step of arbitrating includes:~~

~~authorizing, with said controller computer, invisible viewing of some of the communications~~ 783, wherein the type of data represents a pointer and audio and a graphic.

797. (Currently amended) The system of claim [[483]], ~~wherein the step of arbitrating includes:~~

~~authorizing, with said controller computer, invisible viewing of some of the communications~~ 783, wherein the type of data represents a pointer and video and a graphic.

798. (Currently amended) The system of claim [[484]], ~~wherein the step of arbitrating includes:~~

~~authorizing, with said controller computer, invisible viewing of some of the communications~~ 783, wherein the type of data represents audio and video and a graphic.

799. (Currently amended) The system of claim [[485]], ~~wherein the step of arbitrating includes:~~

~~authorizing, with said controller computer, invisible viewing of some of the communications~~ 783, wherein the type of data represents a pointer and audio and video and a graphic.

800. (Currently amended) The system of claim [[486]], ~~wherein the step of arbitrating includes:~~

Petitioner Microsoft Corporation, Ex. 1002, p. 3351

~~authorizing, with said controller computer, invisible viewing of some of the communications~~ 871, wherein the computer system is further programmed to provide access to a member-associated image.

801. (Currently amended) The system of claim [[487]]~~, wherein the step of arbitrating includes:~~

~~authorizing, with said controller computer, invisible viewing of some of the communications~~ 783, wherein the computer system is further programmed to provide access to a member-associated image.

802. (Currently amended) The system of claim [[488]]~~, wherein the step of arbitrating includes:~~

~~authorizing, with said controller computer, invisible viewing of some of the communications~~ 784, wherein the computer system is further programmed to provide access to a member-associated image.

803. (Currently amended) The system of claim [[489]]~~, wherein the step of arbitrating includes:~~

~~authorizing, with said controller computer, invisible viewing of some of the communications~~ 785, wherein the computer system is further programmed to provide access to a member-associated image.

804. (Currently amended) The system of claim [[490]]~~, wherein the step of arbitrating includes:~~

~~authorizing, with said controller computer, invisible viewing of some of the~~

Petitioner Microsoft Corporation, Ex. 1002, p. 3352

~~communications~~ 786, wherein the computer system is further programmed to provide access to a member-associated image.

805. (Currently amended) The system of claim [[491]]~~, wherein the step of arbitrating includes:~~

~~authorizing, with said controller computer, invisible viewing of some of the communications~~ 787, wherein the computer system is further programmed to provide access to a member-associated image.

806. (Currently amended) The system of claim [[492]]~~, wherein the step of arbitrating includes:~~

~~authorizing, with said controller computer, invisible viewing of some of the communications~~ 788, wherein the computer system is further programmed to provide access to a member-associated image.

807. (Currently amended) The system of claim [[493]]~~, wherein the step of arbitrating includes:~~

~~authorizing, with said controller computer, invisible viewing of some of the communications~~ 789, wherein the computer system is further programmed to provide access to a member-associated image.

808. (Currently amended) The system of claim [[494]]~~, wherein the step of arbitrating includes:~~

~~authorizing, with said controller computer, invisible viewing of some of the communications~~ 790, wherein the computer system is further programmed to provide access to a

Petitioner Microsoft Corporation, Ex. 1002, p. 3353

member-associated image.

809. (Currently amended) The system of claim [[495]], ~~wherein the step of arbitrating includes:~~

~~authorizing, with said controller computer, invisible viewing of some of the communications~~ 791, wherein the computer system is further programmed to provide access to a member-associated image.

810. (Currently amended) The system of claim [[496]], ~~wherein the step of arbitrating includes:~~

~~authorizing, with said controller computer, invisible viewing of some of the communications~~ 792, wherein the computer system is further programmed to provide access to a member-associated image.

811. (Currently amended) The system of claim [[497]], ~~wherein the step of arbitrating includes:~~

~~authorizing, with said controller computer, invisible viewing of some of the communications~~ 793, wherein the computer system is further programmed to provide access to a member-associated image.

812. (Currently amended) The system of claim [[467]], ~~wherein the step of arbitrating includes:~~

~~providing group communications capability, with said controller computer, to handle communications between the one of the plurality of computers and the other of the plurality of computers, said group communications capability including private communication window~~

Petitioner Microsoft Corporation, Ex. 1002, p. 3354

~~capability~~ 794, wherein the computer system is further programmed to provide access to a member-associated image.

813. (Currently amended) The system of claim [[468]]~~, wherein the step of arbitrating includes:~~

~~providing group communications capability, with said controller computer, to handle communications between the one of the plurality of computers and the other of the plurality of computers, said group communications capability including private communication window capability~~ 795, wherein the computer system is further programmed to provide access to a member-associated image..

814. (Currently amended) The system of claim [[469]]~~, wherein the step of arbitrating includes:~~

~~providing group communications capability, with said controller computer, to handle communications between the one of the plurality of computers and the other of the plurality of computers, said group communications capability including private communication window capability~~ 796, wherein the computer system is further programmed to provide access to a member-associated image.

815. (Currently amended) The system of claim [[470]]~~, wherein the step of arbitrating includes:~~

~~providing group communications capability, with said controller computer, to handle communications between the one of the plurality of computers and the other of the plurality of computers, said group communications capability including private communication window capability~~ 797, wherein the computer system is further programmed to provide access to a

Petitioner Microsoft Corporation, Ex. 1002, p. 3355

member-associated image.

816. (Currently amended) The system of claim [[471]]~~, wherein the step of arbitrating includes:~~

~~providing group communications capability, with said controller computer, to handle communications between the one of the plurality of computers and the other of the plurality of computers, said group communications capability including private communication window capability~~ 798, wherein the computer system is further programmed to provide access to a member-associated image.

817. (Currently amended) The system of claim [[472]]~~, wherein the step of arbitrating includes:~~

~~providing group communications capability, with said controller computer, to handle communications between the one of the plurality of computers and the other of the plurality of computers, said group communications capability including private communication window capability~~ 799, wherein the computer system is further programmed to provide access to a member-associated image.

818. (Currently amended) The ~~system of claim 473, wherein the step of arbitrating includes:~~

~~providing group communications capability, with said controller computer, to handle communications between the one of the plurality of computers and the other of the plurality of computers, said group communications capability including private communication window capability~~ method of claim 876, further including:

responsive to the allowing the plurality of computers to communicate, receiving

Petitioner Microsoft Corporation, Ex. 1002, p. 3356

communications, at least one of the plurality of computers, the communications including data representing at least one of a pointer, video, audio, a graphic, or multimedia.

819. (Currently amended) The ~~system of claim 474, wherein the step of arbitrating includes:~~

~~providing group communications capability, with said controller computer, to handle communications between the one of the plurality of computers and the other of the plurality of computers, said group communications capability including private communication window capability~~ method of claim 818, wherein the data represents a pointer.

820. (Currently amended) The ~~system of claim 475, wherein the step of arbitrating includes:~~

~~providing group communications capability, with said controller computer, to handle communications between the one of the plurality of computers and the other of the plurality of computers, said group communications capability including private communication window capability~~ method of claim 818, wherein the data represents audio.

821. (Currently amended) The ~~system of claim 476, wherein the step of arbitrating includes:~~

~~providing group communications capability, with said controller computer, to handle communications between the one of the plurality of computers and the other of the plurality of computers, said group communications capability including private communication window capability~~ method of claim 818, wherein the data represents video.

822. (Currently amended) The ~~system of claim 477, wherein the step of~~

Petitioner Microsoft Corporation, Ex. 1002, p. 3357

~~arbitrating includes:~~

~~providing group communications capability, with said controller computer, to handle communications between the one of the plurality of computers and the other of the plurality of computers, said group communications capability including private communication window capability~~ method of claim 818, wherein the data represents a graphic.

823. (Currently amended) The ~~system of claim 478, wherein the step of arbitrating includes:~~

~~providing group communications capability, with said controller computer, to handle communications between the one of the plurality of computers and the other of the plurality of computers, said group communications capability including private communication window capability~~ method of claim 818, wherein the data represents multimedia.

824. (Currently amended) The ~~system of claim 479, wherein the step of arbitrating includes:~~

~~providing group communications capability, with said controller computer, to handle communications between the one of the plurality of computers and the other of the plurality of computers, said group communications capability including private communication window capability~~ method of claim 818, wherein the data represents a pointer and audio.

825. (Currently amended) The ~~system of claim 480, wherein the step of arbitrating includes:~~

~~providing group communications capability, with said controller computer, to handle communications between the one of the plurality of computers and the other of the plurality of computers, said group communications capability including private communication window~~

Petitioner Microsoft Corporation, Ex. 1002, p. 3358

~~capability~~ method of claim 818, wherein the data represents a pointer and video.

826. (Currently amended) The ~~system of claim 481, wherein the step of arbitrating includes:~~

~~providing group communications capability, with said controller computer, to handle communications between the one of the plurality of computers and the other of the plurality of computers, said group communications capability including private communication window capability~~ method of claim 818, wherein the data represents a pointer and a graphic.

827. (Currently amended) The ~~system of claim 482, wherein the step of arbitrating includes:~~

~~providing group communications capability, with said controller computer, to handle communications between the one of the plurality of computers and the other of the plurality of computers, said group communications capability including private communication window capability~~ method of claim 818, wherein the data represents audio and video.

828. (Currently amended) The ~~system of claim 483, wherein the step of arbitrating includes:~~

~~providing group communications capability, with said controller computer, to handle communications between the one of the plurality of computers and the other of the plurality of computers, said group communications capability including private communication window capability~~ method of claim 818, wherein the data represents audio and a graphic.

829. (Currently amended) The ~~system of claim 484, wherein the step of arbitrating includes:~~

Petitioner Microsoft Corporation, Ex. 1002, p. 3359

833. (Currently amended) The ~~system of claim 488, wherein the step of arbitrating includes:~~

~~providing group communications capability, with said controller computer, to handle communications between the one of the plurality of computers and the other of the plurality of computers, said group communications capability including private communication window capability~~ method of claim 818, wherein the data represents audio and video and a graphic.

834. (Currently amended) The ~~system of claim 489, wherein the step of arbitrating includes:~~

~~providing group communications capability, with said controller computer, to handle communications between the one of the plurality of computers and the other of the plurality of computers, said group communications capability including private communication window capability~~ method of claim 818, wherein the data represents a pointer and audio and video and a graphic.

835. (Currently amended) The ~~system of claim 490, wherein the step of arbitrating includes:~~

~~providing group communications capability, with said controller computer, to handle communications between the one of the plurality of computers and the other of the plurality of computers, said group communications capability including private communication window capability~~ method of claim 818, wherein the data represents a pointer that produces a pointer-triggered message on demand.

836. (Currently amended) The ~~system of claim 491, wherein the step of~~

Petitioner Microsoft Corporation, Ex. 1002, p. 3360

~~arbitrating includes:~~

~~providing group communications capability, with said controller computer, to handle communications between the one of the plurality of computers and the other of the plurality of computers, said group communications capability including private communication window capability~~ method of claim 819, wherein the pointer is a pointer that produces a pointer-triggered message on demand.

837. (Currently amended) The ~~system of claim 492, wherein the step of arbitrating includes:~~

~~providing group communications capability, with said controller computer, to handle communications between the one of the plurality of computers and the other of the plurality of computers, said group communications capability including private communication window capability~~ method of claim 824, wherein the pointer is a pointer that produces a pointer-triggered message on demand.

838. (Currently amended) The ~~system of claim 493, wherein the step of arbitrating includes:~~

~~providing group communications capability, with said controller computer, to handle communications between the one of the plurality of computers and the other of the plurality of computers, said group communications capability including private communication window capability~~ method of claim 825, wherein the pointer is a pointer that produces a pointer-triggered message on demand.

839. (Currently amended) The ~~system of claim 494, wherein the step of arbitrating includes:~~

Petitioner Microsoft Corporation, Ex. 1002, p. 3361

~~providing group communications capability, with said controller computer, to handle communications between the one of the plurality of computers and the other of the plurality of computers, said group communications capability including private communication window capability~~ method of claim 826, wherein the pointer is a pointer that produces a pointer-triggered message on demand.

840. (Currently amended) The ~~system of claim 495, wherein the step of arbitrating includes:~~

~~providing group communications capability, with said controller computer, to handle communications between the one of the plurality of computers and the other of the plurality of computers, said group communications capability including private communication window capability~~ method of claim 830, wherein the pointer is a pointer that produces a pointer-triggered message on demand.

841. (Currently amended) The ~~system of claim 496, wherein the step of arbitrating includes:~~

~~providing group communications capability, with said controller computer, to handle communications between the one of the plurality of computers and the other of the plurality of computers, said group communications capability including private communication window capability~~ method of claim 831, wherein the pointer is a pointer that produces a pointer-triggered message on demand.

842. (Currently amended) The ~~system of claim 497, wherein the step of arbitrating includes:~~

~~providing group communications capability, with said controller computer, to handle~~

Petitioner Microsoft Corporation, Ex. 1002, p. 3362

~~communications between the one of the plurality of computers and the other of the plurality of computers, said group communications capability including private communication window capability~~ method of claim 832, wherein the pointer is a pointer that produces a pointer-triggered message on demand.

843. (Currently amended) A communications system ~~using a computer system~~ to distribute communication over an Internet network, the system including:

a plurality of participator computers connected ~~with a controller computer through the Internet network, each said participator computer respectively connected to the controller computer subsequent to sending a respective log in name and a password, wherein:~~

~~the controller computer is enabled to carry out the steps of:~~

~~respectively storing the log in name and the password corresponding to each of a plurality of user identities;~~

~~determining which of the participator computers can communicate with an other of the participator computers, wherein some of the communications are in real time over the Internet network; and~~

~~providing a member associated image and corresponding member identity information under control of said controller computer, respectively to some of the participator computers~~, responsive to each of the plurality of computers sending a respective login name and a password corresponding to a respective user identity, to a computer system programmed to:

determine which of the plurality of computers can communicate communications with an other of the plurality of computers, wherein at least some of the communications are in real time via the Internet network, and

provide a member-associated image and member identity information respectively corresponding to one of the user identities to at least some of the plurality of computers.

Petitioner Microsoft Corporation, Ex. 1002, p. 3363

844. (Currently amended) The ~~system of claim 843, wherein the controller computer is further enabled to carry out the step of:~~

~~determining a user's age corresponding to said user identity~~ method of claim 834, wherein the pointer is a pointer that produces a pointer-triggered message on demand.

845. (Currently amended) The system of claim ~~844, wherein the controller computer is further enabled to carry out the step of:~~

~~communicating an asynchronous message from one of the participator computers to another of the participator computers~~ 877, wherein the computer system is further programmed to:

send and receive communications between members in a group, the communications including data representing at least one of video, sound, a graphic, or multimedia, and

receive the communications in real time via the Internet network.

846. (Currently amended) The system of claim ~~844, wherein the controller computer is further enabled to carry out the step of censoring unwanted communication from a member~~ 845, wherein the data includes data representing sound.

847. (Currently amended) The system of claim ~~844, wherein the step of arbitrating includes distributing chat communications to a chat group real time over the Internet network~~ 845, wherein the data includes data representing video.

848. (Currently amended) The system of claim ~~847, wherein the controller computer is further enabled to carry out the step of providing private chat capability to the participator~~

Petitioner Microsoft Corporation, Ex. 1002, p. 3364

~~computers~~ 845, wherein the data includes data representing sound and video.

849. (Currently amended) The system of claim ~~847, wherein the controller computer is further enabled to carry out the step of providing private communication window capability to the participator computers~~ 845, wherein the computer system is further programmed to provide the computer corresponding to the first user identity with access to a member-associated image corresponding to the second user identity.

850. (Currently amended) The system of claim ~~844, wherein the controller computer is further enabled to carry out the step of communicating human communication sound to the participator computers~~ 846, wherein the computer system is further programmed to provide the computer corresponding to the first user identity with access to a member-associated image corresponding to the second user identity.

851. (Currently amended) The system of claim ~~844, wherein the controller computer is further enabled to carry out the step of providing video to the participator computers~~ 847, wherein the computer system is further programmed to provide the computer corresponding to the first user identity with access to a member-associated image corresponding to the second user identity.

852. (Currently amended) The system of claim ~~850, wherein the controller computer is further enabled to carry out the step of providing video to the participator computers~~ 848, wherein the computer system is further programmed to provide the computer corresponding to the first user identity with access to a member-associated image corresponding to the second user identity.

Petitioner Microsoft Corporation, Ex. 1002, p. 3365

853. (Currently amended) The ~~system of claim 844, wherein the step of arbitrating is carried out with some of said communications including text~~ method of claim 878, further including sending and receiving communications between members in a group, the communications including data representing at least one of video, sound, a graphic, or multimedia, the receiving in real time via the Internet network.

854. (Currently amended) The ~~system of claim 844, wherein the step of arbitrating is carried out with some of said communications communicated out of band~~ method of claim 853, wherein the data represents sound.

855. (Currently amended) The ~~system of claim 844, wherein the step of arbitrating is carried out with some of said communications are multimedia media messages~~ method of claim 853, wherein the data represents video.

856. (Currently amended) The ~~system of claim 843, wherein the controller computer is further enabled to carry out the step of controlling invisible viewing of the communications~~ method of claim 853, wherein the data represents sound and video.

857. (Currently amended) The ~~system of claim 844, wherein the controller computer is further enabled to carry out the step of controlling invisible viewing of the communications~~ method of claim 878, further including sending and receiving communications between members in a group, the communications including data representing a member-associated image, sound, and video.

Petitioner Microsoft Corporation, Ex. 1002, p. 3366

858. (Currently amended) The ~~system of claim 845, wherein the controller computer is further enabled to carry out the step of controlling invisible viewing of the communications~~ method of claim 878, further including:

store, for the first user identity, an authorization associated with presentation of graphical multimedia; and

based on the authorization, present the graphical multimedia at one of the plurality of computers corresponding to the second user identity.

859. (Currently amended) The ~~system of claim 846, wherein the controller computer is further enabled to carry out the step of controlling invisible viewing of the communications~~ method of claim 853, further including:

store, for the first user identity, an authorization associated with presentation of graphical multimedia; and

based on the authorization, present the graphical multimedia at one of the plurality of computers corresponding to the second user identity.

860. (Currently amended) The ~~system of claim 847, wherein the controller computer is further enabled to carry out the step of controlling invisible viewing of the communications~~ method of claim 854, further including:

store, for the first user identity, an authorization associated with presentation of graphical multimedia; and

based on the authorization, present the graphical multimedia at one of the plurality of computers corresponding to the second user identity.

861. (Currently amended) The ~~system of claim 848, wherein the controller~~

Petitioner Microsoft Corporation, Ex. 1002, p. 3367

~~computer is further enabled to carry out the step of controlling invisible viewing of the communications~~ method of claim 855, further including:

store, for the first user identity, an authorization associated with presentation of graphical multimedia; and

based on the authorization, present the graphical multimedia at one of the plurality of computers corresponding to the second user identity.

862. (Currently amended) The ~~system of claim 849, wherein the controller computer is further enabled to carry out the step of controlling invisible viewing of the communications~~ method of claim 901, wherein at least one of the multimedia messages includes data representing sound.

863. (Currently amended) The ~~system of claim 850, wherein the controller computer is further enabled to carry out the step of controlling invisible viewing of the communications~~ method of claim 901, wherein at least one of the multimedia messages includes data representing video.

864. (Currently amended) The ~~system of claim 851, wherein the controller computer is further enabled to carry out the step of controlling invisible viewing of the communications~~ method of claim 901, wherein at least one of the multimedia messages includes data representing sound and video.

865. (Currently amended) The ~~system of claim 852, wherein the controller computer is further enabled to carry out the step of controlling invisible viewing of the communications~~ method of claim 901, further including:

Petitioner Microsoft Corporation, Ex. 1002, p. 3368

storing, for the first user identity, an authorization associated with presentation of graphical multimedia; and

based on the authorization, presenting the graphical multimedia at one of the plurality of computers corresponding to the second user identity.

866. (Currently amended) The ~~system of claim 853, wherein the controller computer is further enabled to carry out the step of controlling invisible viewing of the communications~~ method of claim 862, further including:

storing, for the first user identity, an authorization associated with presentation of graphical multimedia; and

based on the authorization, presenting the graphical multimedia at one of the plurality of computers corresponding to the second user identity.

867. (Currently amended) The ~~system of claim 854, wherein the controller computer is further enabled to carry out the step of controlling invisible viewing of the communications~~ method of claim 863, further including:

storing, for the first user identity, an authorization associated with presentation of graphical multimedia; and

based on the authorization, presenting the graphical multimedia at one of the plurality of computers corresponding to the second user identity.

868. (Currently amended) The ~~system of claim 855, wherein the controller computer is further enabled to carry out the step of controlling invisible viewing of the communications~~ method of claim 864, further including:

storing, for the first user identity, an authorization associated with presentation of

Petitioner Microsoft Corporation, Ex. 1002, p. 3369

graphical multimedia; and

based on the authorization, presenting the graphical multimedia at one of the plurality of computers corresponding to the second user identity.

869. (Currently amended) The ~~method of claim 1, wherein receiving said communications includes causing presentation of some of said communications by one of said participator computers in said group~~ system of claim 902, wherein at least one of the multimedia messages includes data representing sound.

870. (Currently amended) The system of claim [[435]]~~, wherein one of said participator computers in said group is enabled to carry out the step of receiving some of said communications, said receiving including causing presentation of some of said communications by one of said participator computers in said group~~ 902, wherein at least one of the multimedia messages includes data representing video.

871. (Currently amended) ~~A system to control communication over an Internet network, the system including:~~

~~a plurality of participator computers connected with a controller computer through the Internet network, each said participator computer respectively connected to the controller computer subsequent to sending a respective log in name and a password corresponding to a user identity, the controller computer enabled to control real time Internet communication by using a control database storing for each said user identity a respective authorization corresponding to communicating multimedia~~ An Internet network system, the system including:

a plurality of computers connected, responsive to each of the plurality of computers sending a respective login name and a password corresponding to a respective user identity, to a

Petitioner Microsoft Corporation, Ex. 1002, p. 3370

computer system programmed to:

store, for a first of the user identities, a respective authorization associated with graphical data, and

allow the plurality of computers to communicate in real time via the Internet network, and based on the authorization, cause the graphical data to be presented at one of the plurality of computers corresponding to a second of the user identities.

872. (Currently amended) The system of claim ~~871, wherein one of said participator computers is enabled to carry out the step of receiving, including causing presentation, of some of said communications~~ 902, wherein at least one of the multimedia messages includes data representing sound and video.

873. (Currently amended) The system of claim ~~872, wherein one of said communications includes at least one of a video, a graphic, or a pointer-triggered message~~ 902, wherein the computer system is further programmed to provide the computer corresponding to the first user identity with access to a member-associated image corresponding to the second user identity.

874. (Currently amended) The system of claim ~~871, wherein said authorization for communicating multimedia includes an authorization for communicating graphical multimedia~~ 869, wherein the computer system is further programmed to provide the computer corresponding to the first user identity with access to a member-associated image corresponding to the second user identity.

875. (Currently amended) The system of claim ~~872, wherein said authorization~~

Petitioner Microsoft Corporation, Ex. 1002, p. 3371

~~for communicating multimedia includes an authorization for communicating graphical multimedia~~ 870, wherein the computer system is further programmed to provide the computer corresponding to the first user identity with access to a member-associated image corresponding to the second user identity.

876. (Currently amended) A method of ~~using a computer to control communication~~ communicating over an Internet network, the method including ~~the steps of~~:

~~connecting a plurality of participator computers with a controller computer through an Internet network, each said participator computer respectively connected to the controller computer subsequent to sending a respective log in name and a password corresponding to a user identity, the controller computer enabled to control real time communication between the participator computers by storing for each a respective authorization corresponding to communicating graphical multimedia used in the controlling~~ connecting a plurality of computers, responsive to each of the plurality of computers sending a respective login name and password corresponding to a respective user identity, to a computer system;

storing, for a first of the user identities, a respective authorization allowing or disallowing presentment of graphical multimedia; and

allowing the plurality of computers to communicate in real time via the Internet network, and based on the authorization, presenting the graphical multimedia at one of the plurality of computers corresponding to a second of the user identities.

877. (Currently amended) ~~A system using a computer to control communication, the system including:~~

~~a plurality of participator computers connected with a controller computer through an Internet network, each said participator computer respectively connected to the controller computer~~

Petitioner Microsoft Corporation, Ex. 1002, p. 3372

~~subsequent to sending a respective log in name and a password corresponding to a user identity, the controller computer enabled to carry out the steps of:~~

~~controlling real-time communication between the participator computers, and storing for each said user identity a respective authorization to communicate corresponding to communicating graphical multimedia used in the controlling~~ An Internet network communication system, the system including:

a plurality of computers, each of the plurality of computers being connected to a respective input device and to a respective output device, the plurality of computers being connected, responsive to each of the plurality of computers sending a respective login name and password corresponding to a respective user identity, to a computer system programmed to:

respond to one of the plurality of the computers communicating a pointer in real time and via the Internet, wherein the pointer is a pointer that produces a pointer-triggered message on demand, by determining whether a first of the user identities is censored from content in the pointer-triggered message,

if the content is censored, disallow the pointer-triggered message from being presented at the output device of the computer corresponding to the first of the user identity, and

if the content is not censored, allow the pointer-triggered message to be presented at the output device of the computer corresponding to the first of the user identities.

878. (Currently amended) A method of ~~controlling real-time communications over~~ communicating via an Internet network, the method including ~~the steps of~~:

~~storing, with a controller computer, a set of privileges corresponding to a user identity;~~

~~connecting a plurality of participator computers with the controller computer through the Internet network;~~

Petitioner Microsoft Corporation, Ex. 1002, p. 3373

~~receiving a login name and password corresponding to the user identity, from a first participator computer of the plurality of participator computers;~~

~~determining whether the set of privileges corresponding to the user identity includes a privilege to communicate a type of message in real-time over the Internet network, the type including at least one of a video, graphic, graphical multimedia, or a pointer-triggered message that is receivable on demand;~~

~~if the set of privileges includes the privilege to communicate the type of message in real-time over the Internet network, allowing the first participator computer to communicate the type of message to another of the plurality of participator computers; and~~

~~if the set of privileges does not include the privilege to communicate the type of message in real-time over the Internet network, not allowing the first participator computer to communicate the type of message another of the plurality of participator computers~~ sending a respective login name and password corresponding to a respective user identity;

after the sending, connecting a plurality of computers to a computer system, each of the plurality of computers being connected to a respective input device and to a respective output device;

responsive to at least one of the plurality of computers communicating a pointer in real time and via the Internet, the pointer producing a pointer-triggered message on demand, determining whether a first of the user identities is censored from content in the pointer-triggered message;

if the content is censored, disallowing the pointer-triggered message to be presented at the output device of the computer corresponding to the first of the user identities; and

if the content is not censored, allowing the pointer-triggered message to be presented at the output device of the computer corresponding to the first of the user identities.

Petitioner Microsoft Corporation, Ex. 1002, p. 3374

879. (Currently amended) The ~~method of claim 878, further including a human communication sound as said type of message~~ system of claim 872, wherein the computer system is further programmed to provide the computer corresponding to the first user identity with access to a member-associated image corresponding to the second user identity.

880. (Currently amended) The ~~method of claim 878, further including the step of sending a denial message to the first participator computer of said participator computers if the set of privileges does not include a privilege to communicate the type of message in real-time over the Internet network~~ system of claim 909, wherein the at least one type includes at least one of text or ascii.

881. (Currently amended) The ~~method of claim 878, wherein the type of message is graphical multimedia~~ system of claim 909, wherein the at least one type includes audio.

882. (Currently amended) The ~~method of claim 878, wherein the type of message is video~~ system of claim 909, wherein the at least one type includes video.

883. (Currently amended) The ~~method of claim 878, wherein the type of message is graphic~~ system of claim 909, wherein the at least one type includes a graphic.

884. (Currently amended) A method of ~~controlling real-time communications over~~ communicating via an Internet network, the method including ~~the steps of~~:

~~storing, with a controller computer, a set of privileges corresponding to a user identity;~~

Petitioner Microsoft Corporation, Ex. 1002, p. 3375

~~connecting a plurality of participator computers with the controller computer through the Internet network;~~

~~receiving a login name and password corresponding to the user identity, from a first participator computer of the plurality of participator computers;~~

~~determining whether the set of privileges corresponding to the user identity includes a privilege to communicate a type of message in real-time over the Internet network, the type including human communication sound;~~

~~if the set of privileges includes the privilege to communicate the type of message in real-time over the Internet network, allowing the first participator computer to communicate the type of message to another of the plurality of participator computers; and~~

~~if the set of privileges does not include the privilege to communicate the type of message in real-time over the Internet network, not allowing the first participator computer to communicate the type of message another of the plurality of participator computers~~ sending a respective login name and password corresponding to a respective user identity;

after the sending, connecting a plurality of computers to a computer system, each of the plurality of computers being connected to a respective input device and to a respective output device;

determining whether at least one of a first user identity and a second user identity, individually, is censored from receiving data comprising a pointer in communications that include at least one of text or ascii, the pointer being a pointer that produces a pointer-triggered message on demand;

determining whether the first and the second of the user identities are able to form a group; and

if the first and the second user identities are able to form the group, then forming the group for sending the communications, receiving and presenting the communications that are not

Petitioner Microsoft Corporation, Ex. 1002, p. 3376

censored based on the individual user identity, the receiving being in real time and over the Internet network, and not allowing the data that is censored to be presented at the output device corresponding to the user identity that is censored from receiving the data.

885. (Currently amended) ~~A system controlling real-time communications over an Internet network, the system including:~~

~~a plurality of participator computers connected with a controller computer through the Internet network, each at least one of said participator computers connected to the controller computer subsequent to sending a log in name and a password corresponding to a user identity; and~~

~~wherein the controller computer is enabled to carry out the steps of:~~

~~storing a set of privileges corresponding to the user identity;~~

~~determining whether the set of privileges corresponding to the user identity includes a privilege to communicate a type of message in real-time over the Internet network, the type including at least one of a video, graphic, graphical multimedia, or a pointer-triggered message that is receivable on demand;~~

~~if the set of privileges includes the privilege to communicate the type of message in real-time over the Internet network, allowing the first participator computer to communicate the type of message to another of the plurality of participator computers; and~~

~~if the set of privileges does not include the privilege to communicate the type of message in real-time over the Internet network, not allowing the first participator computer to communicate the type of message another of the plurality of participator computers~~ A method of communicating via an Internet network, the method including:

connecting a computer system to a plurality of computers;

sending a respective login name and password corresponding to a respective user

Petitioner Microsoft Corporation, Ex. 1002, p. 3377

identity from each of the plurality of computers;

determining whether a first of the user identities and a second of the user identities are able to form a group for sending and receiving communications in real time;

determining whether at least one of the first user identity and the second user identity, individually, is censored from sending a pointer in the communications including at least one of text or ascii, the pointer being a pointer that produces producing a pointer-triggered message on demand; and

if the first and the second user identities are able to form the group, then forming the group and sending and receiving the communications that are not censored based on the individual user identity, the receiving being in real time over the Internet network.

886. (Currently amended) The ~~method of claim 885, further including a human communication sound as said type of message~~ system of claim 909, wherein the type further includes multimedia.

887. (Currently amended) The ~~method of claim 885, wherein said steps further include the step of sending a denial message to the first participator computer of said participator computers if the set of privileges does not include a privilege to communicate the type of message in real time over the Internet network~~ system of claim 909, wherein the type further includes graphical multimedia.

888. (Currently amended) The ~~method of claim 885, wherein the type of message is graphical multimedia~~ system of claim 909, wherein the type further includes a member-associated image.

Petitioner Microsoft Corporation, Ex. 1002, p. 3378

889. (Currently amended) The ~~method of claim 885, wherein the type of message is video~~ system of claim 909, wherein the type further includes a member-associated image and at least one of text or ascii.

890. (Currently amended) The ~~method of claim 885, wherein the type of message is graphic~~ system of claim 909, wherein the type further includes audio and at least one of text or ascii.

891. (Currently amended) A system ~~controlling real-time communications over~~ to communicate via an Internet network, the system including:

a plurality of participator computers ~~connected with a controller computer through the Internet network, at least one of said participator computers connected to the controller computer subsequent to sending a log in name and a password corresponding to a user identity; and~~

~~wherein the controller computer is enabled to carry out the steps of:~~

~~storing a set of privileges corresponding to the user identity;~~

~~determining whether the set of privileges corresponding to the user identity includes a privilege to communicate a type of message in real-time over the Internet network, the type including a human communication sound;~~

~~if the set of privileges includes the privilege to communicate the type of message in real-time over the Internet network, allowing the first participator computer to communicate the type of message to another of the plurality of participator computers; and~~

~~if the set of privileges does not include the privilege to communicate the type of message in real-time over the Internet network, not allowing the first participator computer to communicate the type of message another of the plurality of participator computers~~ , each of the

Petitioner Microsoft Corporation, Ex. 1002, p. 3379

plurality of computers being connected to a respective input device and to a respective output device, the plurality of computers being connected, responsive to each of the plurality of computers sending a respective login name and password corresponding to a respective user identity, to a computer system programmed to:

form a group corresponding to a first of the user identities and a second of the user identities, each member of the group being capable of sending and receiving communications in real time,

determine whether at least one of the first user identity and the second user identity, individually, is censored from receiving, in the communications, data comprising a pointer, the pointer producing a pointer-triggered message on demand, and

thereafter cause the computers to receive, in real time via the Internet network, and present the communications that are not censored based on the individual user identity, and to not present the data that is censored at the output device corresponding to the user identity that is censored from receiving the data, wherein at least some of the communications include data representing at least text or ascii.

892. (Currently amended) ~~A method of using computers to communicate over an Internet network, the method including the steps of:~~

~~connecting a plurality of participator computers with a controller computer through the Internet network;~~

~~receiving a log in name and a password corresponding to a user identity, respectively from each of said participator computers;~~

~~respectively storing a set of privileges corresponding to each of said user identities, the set including a privilege to receive non-textual communication;~~

~~determining which ones of the participator computers can form a group to send and~~

Petitioner Microsoft Corporation, Ex. 1002, p. 3380

~~receive communications, said communications respectively in accordance with the corresponding privilege; and~~

~~sending and receiving said communications in real time over the Internet network between said participator computers in said group, one of said communications including a human communication sound~~ A system to communicate via an Internet network, the system including:

a plurality of computers, each of the plurality of computers being connected to a respective input device and to a respective output device, the plurality of computers being connected, responsive to each of the plurality of computers sending a respective login name and password corresponding to a respective user identity, to a computer system programmed to:

form a group corresponding to a first of the user identities and a second of the user identities, each member of the group being capable of sending and receiving communications in real time,

determine whether at least one of the first user identity and the second user identity, individually, is censored from sending, in the communications, a pointer that produces a pointer-triggered message on demand, and

thereafter cause the computers to receive, in real time via the Internet network, and present the communications that are not censored based on the individual user identity, and to not present the communications that are censored at the output device corresponding to the user identity that is censored from receiving the data, at least some of the communications including data representing at least text or ascii.

893. (Currently amended) A method of ~~using computers to communicate over~~ communicating via an Internet network, the method including ~~the steps of~~:

connecting ~~a controller computer with a plurality of participator computers, said connecting including connecting at least one of the plurality of participator computers with the~~

Petitioner Microsoft Corporation, Ex. 1002, p. 3381

~~providing group communications capability, with said controller computer, to handle communications between the one of the plurality of computers and the other of the plurality of computers, said group communications capability including private communication window capability~~ method of claim 818, wherein the data represents video and a graphic.

830. (Currently amended) The ~~system of claim 485, wherein the step of arbitrating includes:~~

~~providing group communications capability, with said controller computer, to handle communications between the one of the plurality of computers and the other of the plurality of computers, said group communications capability including private communication window capability~~ method of claim 818, wherein the data represents a pointer and audio and video.

831. (Currently amended) The ~~system of claim 486, wherein the step of arbitrating includes:~~

~~providing group communications capability, with said controller computer, to handle communications between the one of the plurality of computers and the other of the plurality of computers, said group communications capability including private communication window capability~~ method of claim 818, wherein the data represents a pointer and audio and a graphic.

832. (Currently amended) The ~~system of claim 487, wherein the step of arbitrating includes:~~

~~providing group communications capability, with said controller computer, to handle communications between the one of the plurality of computers and the other of the plurality of computers, said group communications capability including private communication window capability~~ method of claim 818, wherein the data represents a pointer and video and a graphic.

Petitioner Microsoft Corporation, Ex. 1002, p. 3382

~~controller computer through the Internet network;~~

~~receiving a log in name and a password corresponding to a user identity, respectively from each of said participator computers;~~

~~respectively storing a set of privileges corresponding to each of said user identities, the set including a privilege to receive non-textual communication; and~~

~~determining, from said privilege, which of the participator computers can communicate human communication sound in real time~~ a plurality of computers to a system;

sending, from each of the plurality of computers, a respective login name and password corresponding to a respective user identity;

providing a first of the user identities access to a member-associated image and to member identity information respectively corresponding to a second of the user identities;

determining whether the first of the user identities and the second of the user identities are able to form a group for sending and for receiving communications in real time; and

if the first and the second user identities are able to form the group, forming the group, sending the communications, and receiving the communications in real time and via the Internet network, wherein at least some of the communications include data representing multimedia messages, and at least some of the multimedia messages include a pointer that produces a pointer-triggered message on demand.

894. (Currently amended) ~~A system using computers to communicate over an Internet network, the system including:~~

~~a plurality of participator computers connected with a controller computer through the Internet network, at least one of said participator computers connected to the controller computer subsequent to sending a log in name and a password corresponding to a user identity, the controller computer enabled to carry out the steps of:~~

Petitioner Microsoft Corporation, Ex. 1002, p. 3383

~~storing a set of privileges corresponding to the user identity, the set including a privilege to receive non-textual communication; and~~

~~determining which ones of the participator computers can form a group to communicate communications in real time over the Internet network, said communications respectively in accordance with the corresponding privilege, wherein one of said communications includes human communication sound~~ A method of communicating via an Internet network, the method including:

connecting a plurality of computers to a computer system;

sending a respective login name and password corresponding to a respective user identity from each of the plurality of computers;

determining whether a first of the user identities and a second of the user identities are able to form a group for sending and for receiving communications in real time;

determining whether the first user identity is censored from access to a member-associated image and member identity information respectively corresponding to the second user identity;

if the first user identity is censored, not allowing access to the member-associated image;

if the first user identity is not censored, allowing access to the member-associated image; and

if the first and the second user identities are able to form the group, forming the group for sending the communications, and receiving the communications in real time and via the Internet network, wherein at least some of the communications include data representing at least one of a pointer, video, audio, graphic, or multimedia.

895. (Currently amended) A system ~~using computers to communicate over~~ to

Petitioner Microsoft Corporation, Ex. 1002, p. 3384

communicate via an Internet network, the system including:

a plurality of ~~participator~~ computers ~~connected with a controller computer, at least one of said participator computers connected to the controller computer through the Internet network, subsequent to sending a log-in name and a password corresponding to a user identity; wherein:~~

~~the controller computer is enabled to carry out the steps of:~~

~~storing a set of privileges corresponding to the user identity, the set including a privilege to receive non-textual communication; and~~

~~determining, from said privilege, which of the participator computers can communicate human communication sound to an other of the participator computers over the Internet network in real time~~ communicatively connected, responsive to each of the computers sending a respective login name and password corresponding to a respective user identity, to a computer system programmed to:

determine whether a first of the user identities and a second of the user identities are able to form a group for sending and for receiving communications in real time,

determine whether the first user identity is censored from access to a member-associated image and member identity information respectively corresponding to the second user identity,

if the first user identity is censored, not allow access to the member-associated image,

if the first user identity is not censored, allow access to the member-associated image, and

if the first and the second user identities are able to form the group, then form the group for sending the communications,

wherein the computers corresponding to the user identities of the formed group are

Petitioner Microsoft Corporation, Ex. 1002, p. 3385

programmed to receive the communications in real time and via the Internet network wherein at least some of the communications include data representing multimedia and at least some of the communications include a pointer that produces a pointer-triggered message on demand.

896. (Currently amended) ~~A system to control communication over an Internet network, the system including:~~

~~a plurality of participator computers connected with a controller computer through the Internet network, each said participator computer respectively connected to the controller computer subsequent to sending a respective log in name and a password corresponding to a user identity, the controller computer enabled to control real time Internet communication between said users by using a control database storing for each said user identity a respective authorization for communicating human communication sound in some of said communications~~ An Internet network communication system, the system including:

a plurality of computers connected, responsive to each of the plurality of computers sending a respective login name and password corresponding to a respective user identity, to a computer system programmed to:

provide a first of the user identities access to a member-associated image corresponding to a second of the user identities,

determine whether the first user identity is censored from access to a member-associated image corresponding to the second user identity,

if the first user identity is censored, not allow access to the member-associated image,

if the first user identity is not censored, allow access to the member-associated image,

determine whether the first of the user identities and the second of the user

Petitioner Microsoft Corporation, Ex. 1002, p. 3386

identities are able to form a group for sending and for receiving communications in real time, and

if the first and the second user identities are able to form the group, form the group, wherein those of the plurality of computers corresponding to the first and the second user identities are programmed to send the communications and to receive the communications in real time and via the Internet network.

897. (Currently amended) The system of claim ~~896, wherein one of said participator computers is enabled to carry out the step of receiving, including causing presentation, of some of said communications~~ 909, wherein the at least one type includes video and at least one of text or ascii.

898. (Currently amended) The system of claim ~~896, wherein one of said communications includes at least one of a video, a graphic, or a pointer-triggered message~~ 909, wherein the at least one type includes graphic and at least one of text or ascii.

899. (Currently amended) The system of claim ~~897, wherein one of said communications includes at least one of a video, a graphic, or a pointer-triggered message~~ 909, wherein the at least one type includes audio and video and at least one of text or ascii.

900. (Currently amended) The system of claim ~~897, wherein some of said communications include graphical multimedia~~ 909, wherein the at least one type includes audio and a member-associated image.

901. (Currently amended) A method of ~~using a computer to control~~

Petitioner Microsoft Corporation, Ex. 1002, p. 3387

~~communication~~ communicating via an Internet network, the method including ~~the steps of~~:

connecting a ~~plurality of participator computers with a controller computer through an Internet network;~~

~~receiving, respectively, a log in name and a password corresponding to a user identity from each of said participator computers;~~

~~enabling the controller computer to carry out the step of controlling real time communication between the participator computers by storing for each said user identity a respective authorization to communicate human communication sound, the authorization used in the controlling~~ computer system with a plurality of computers;

sending, from each of the plurality of computers, a respective user identity associated with a login name and a password;

permitting at least a first of the user identities and a second of the user identities to form a group; and

communicating the communications in real time, via the Internet network, between the computers in the group, wherein at least some of the communications include data representing multimedia messages comprised of more than one data type, and at least some other of the communications include a pointer that produces a pointer-triggered message on demand.

902. (Currently amended) A system ~~using a computer to control communication~~ to communicate via an Internet network, the system including:

a plurality of ~~participator~~ computers ~~connected with a controller computer through an Internet network, each said participator computer respectively connected to the controller computer subsequent to sending a respective log in name and a password corresponding to a user identity, the controller computer enabled to carry out the steps of:~~

~~controlling real time communication between the participator computers, and storing~~

Petitioner Microsoft Corporation, Ex. 1002, p. 3388

~~for each said user identity a respective authorization to communicate human communication sound, the authorization used in the controlling~~ , responsive to each of the computers sending information indicative of a respective login name and password corresponding to a respective user identity, to a computer system programmed to:

permit at least a first of the plurality of computers and a second of the plurality of computers to form a group for communicating communications in real time via the Internet network, wherein those of the plurality of computers in the group are programmed to receive the communications, at least some of the communications including data representing multimedia messages comprised of more than one data type, and at least some other of the communications including a pointer that produces a pointer-triggered message on demand.

903. (Currently amended) ~~A system controlling real-time communications over an Internet network, the system including:~~

~~a plurality of participator computers connected with a controller computer, at least one of said participator computers being connected to the controller computer through the Internet network, said participator computers including a first computer connected to the controller computer subsequent to sending a log-in name and a password corresponding to a user identity; and~~

~~a controller computer enabled to carry out the steps of:~~

~~storing a set of privileges corresponding to the user identity;~~

~~determining whether the set of privileges corresponding to the user identity includes a privilege to communicate a type of message in real-time over the Internet network, the type including at least one of a video, graphic, graphical multimedia, or a pointer-triggered message;~~

~~if the set of privileges includes the privilege to communicate the type of message in real-time over the Internet network, allowing the first participator computer to communicate the type~~

Petitioner Microsoft Corporation, Ex. 1002, p. 3389

~~of message to another of the plurality of participator computers; and~~

~~if the set of privileges does not include the privilege to communicate the type of message in real-time over the Internet network, not allowing the first participator computer to communicate the type of message another of the plurality of participator computers~~ A human communication system for controlling communication via an Internet network, the system including:

a plurality of computers connected, responsive to each of the plurality of computers sending a user identity associated with a login name and a password, to a computer system programmed to allow a first of the user identities and a second of the user identities to form a group to send and receive communications in real time and via the Internet network, wherein those of the plurality of computers in the group are programmed to receive communications, wherein at least some of the communications include a pointer that produces a pointer-triggered message on demand, at least some of the communications include data representing human communication of sound, and at least some of the communications include data representing at least one of text or ascii.

904. (Currently amended) The system of claim ~~903, further including human communication sound as said type of message~~ 909, wherein the at least one type includes video and a member-associated image.

905. (Currently amended) The system of claim ~~903, wherein said steps further include the step of sending a denial message to the first participator computer of said participator computers if the set of privileges does not include a privilege to communicate the type of message in real-time over the Internet network~~ 909, wherein the at least one type includes audio and a member-associated image and at least one of text or ascii.

Petitioner Microsoft Corporation, Ex. 1002, p. 3390

906. (Currently amended) The system of claim ~~903, wherein the type of message is graphical multimedia~~ 909, wherein the at least one type includes multimedia and at least one of text or ascii.

907. (Currently amended) The system of claim ~~903, wherein the type of message is video~~ 909, wherein the at least one type includes the type including a pointer, a the pointer is a pointer that produces a pointer-triggered message on demand.

908. (Currently amended) The system of claim ~~903, wherein the type of message is graphic~~ 880, wherein the at least one type includes the type including a pointer, a the pointer is a pointer that produces a pointer-triggered message on demand.

909. (Currently amended) A system of controlling ~~real-time~~ communications ~~over~~ via an Internet network, the system including:

~~plurality of participator computers connected with a controller computer, at least one of said participator computers being connected to the controller computer through the Internet network, said participator computers including a first computer connected to the controller computer subsequent to sending a log in name and a password corresponding to a user identity; and~~

~~wherein the controller computer is enabled to carry out the steps of:~~

~~storing a set of privileges corresponding to the user identity;~~

~~determining whether the set of privileges corresponding to the user identity includes a privilege to communicate a type of message in real-time over the Internet network, the type including a human communication sound;~~

~~if the set of privileges includes the privilege to communicate the type of message in~~

Petitioner Microsoft Corporation, Ex. 1002, p. 3391

~~real-time over the Internet network, allowing the first participator computer to communicate the type of message to another of the plurality of participator computers; and~~

~~if the set of privileges does not include the privilege to communicate the type of message in real-time over the Internet network, not allowing the first participator computer to communicate the type of message another of the plurality of participator computers~~ a computer system programmed to:

connect a plurality of computers including a first computer in response to each of the plurality of computers sending information indicative of a respective login name and a respective password, which together correspond to a user identity,

store a set of privileges corresponding to each user identity,

determine whether the set of privileges corresponding to each user identity includes a privilege to communicate at least one type of message in real time via the Internet network, the type including a pointer, and if the set of privileges includes the privilege, communicate the at least one type of message,

the computer system being further programmed to allow the first computer to communicate data representing the at least one type of message to another of the plurality of computers, and

if the set of privileges does not include the privilege to communicate the at least one type of message, disallow the first computer from communicating the at least one type of message to another of the plurality of computers.

910. (Currently amended) A method of controlling ~~real-time~~ communications ~~over~~ via an Internet network, the method including ~~the steps of~~:

~~storing, with a controller computer, a set of privileges corresponding to a user identity;~~

Petitioner Microsoft Corporation, Ex. 1002, p. 3392

~~connecting a plurality of participator computers with the controller computer, at least one of the participator computers being connected with the controller computer through the Internet;~~

~~receiving a login name and password corresponding to the user identity from a first participator computer of the plurality of participator computers;~~

~~determining whether the set of privileges corresponding to the user identity includes a privilege to communicate a type of message in real-time over the Internet network, the type including at least one of a video, graphic, graphical multimedia, or a pointer-triggered message;~~

~~if the set of privileges includes the privilege to communicate the type of message in real-time over the Internet network, allowing the first participator computer to communicate the type of message to another of the plurality of participator computers; and~~

~~if the set of privileges does not include the privilege to communicate the type of message in real-time over the Internet network, not allowing the first participator computer to communicate the type of message another of the plurality of participator computers~~ connecting a computer system with a plurality of computers;

sending information indicative of a respective login name and password corresponding to a first user identity from a first of the plurality of computers;

receiving information indicative of a login name and a password corresponding to a second user identity from a second of the plurality of computers;

allowing the first user identity and the second user identity to form a group; and

sending and receiving communications in real time and via the Internet network between those of the plurality of computers in the group, wherein at least some of the communications include a pointer that produces a pointer-triggered message on demand, at least some of the communications include data representing sound indicative of a human communication of sound, and at least some of the communications include data representing at

Petitioner Microsoft Corporation, Ex. 1002, p. 3393

least one of text or ascii.

911. (Currently amended) The ~~method of claim 910, further including a human communication sound as said type of message~~ system of claim 881, wherein the at least one type includes the type including a pointer, a the pointer is a pointer that produces a pointer-triggered message on demand.

912. (Currently amended) The ~~method of claim 910, further including the step of sending a denial message to the first participator computer of said participator computers if the set of privileges does not include a privilege to communicate the type of message in real-time over the Internet network~~ system of claim 882, wherein the at least one type includes the type including a pointer, a the pointer is a pointer that produces a pointer-triggered message on demand.

913. (Currently amended) The ~~method of claim 910, wherein the type of message is graphical multimedia~~ system of claim 883, wherein the at least one type includes the type including a pointer, a the pointer is a pointer that produces a pointer-triggered message on demand.

914. (Currently amended) The ~~method of claim 910, wherein the type of message is video~~ system of claim 886, wherein the at least one type includes the type including a pointer, a the pointer is a pointer that produces a pointer-triggered message on demand.

915. (Currently amended) The ~~method of claim 910, wherein the type of message is graphic~~ system of claim 887, wherein the at least one type includes the type including a pointer, a the pointer is a pointer that produces a pointer-triggered message on demand.

Petitioner Microsoft Corporation, Ex. 1002, p. 3394

916. (Currently amended) A method of controlling ~~real-time~~ communications ~~over~~ via an Internet network, the method including ~~the steps of~~:

storing~~, with a controller computer, a set of privileges corresponding to a user identity;~~

~~connecting a plurality of participator computers with the controller computer, at least one of said participator computers being connected with the controller computer through the Internet network;~~

~~receiving a login name and password corresponding to the user identity from a first participator computer of the plurality of participator computers;~~

~~determining whether the set of privileges corresponding to the user identity includes a privilege to communicate a type of message in real-time over the Internet network, the type including a human communication sound;~~

~~if the set of privileges includes the privilege to communicate the type of message in real-time over the Internet network, allowing the first participator computer to communicate the type of message to another of the plurality of participator computers; and~~

~~if the set of privileges does not include the privilege to communicate the type of message in real-time over the Internet network, not allowing the first participator computer to communicate the type of message another of the plurality of participator computers~~ a set of privileges corresponding to a user identity;

connecting a plurality of computers via the Internet network;

receiving information indicative of a login name and a password corresponding respectively to the user identity from a first computer of the plurality of computers;

determining whether the set of privileges includes a privilege to communicate at least one type of message, the type of message including at least one of a pointer, audio, video, a

Petitioner Microsoft Corporation, Ex. 1002, p. 3395

graphic, or multimedia, the privilege to communicate corresponding to at least one parameter changeable by a user corresponding to another user identity;

if the set of privileges includes the privilege to communicate the at least one type of message, allowing the first of the plurality of computer to communicate, in real time via the internet network, the type of message to an other of the plurality of computers; and

if the set of privileges does not include the privilege to communicate the at least one type of message, disallowing the first computer from communicating the at least one type of message to the other of the plurality of computers.

917. (Currently amended) ~~A system to control communication over an Internet network, the system including:~~

~~a plurality of participator computers connected with a controller computer, wherein at least one of said participator computers is connected with said controller computer through the Internet network, each said participator computer respectively connected to the controller computer subsequent to sending a respective log in name and a password corresponding to a user identity, the controller computer enabled to control real time Internet communication between said users by using a control database storing each said user identity, the user identity having a respective authorization for communicating human communication sound in some of said communications~~ A method of receiving a communication via an Internet network, the method including:

sending, from a first computer, information indicative of a login name and a password corresponding to a user identity;

responsive to the sending, connecting the first computer to a computer system;

forming a communication link between the first computer and a second computer for communicating a communication, the communication including data representing at least one of a member-associated image, video, a graphic, sound, or multimedia;

Petitioner Microsoft Corporation, Ex. 1002, p. 3396

communicating a pointer, from the first computer to the computer system to obtain the communication at the first computer, the communication being sent in real time and via the Internet network; and

receiving the communication from the first computer at the second computer over the communication link.

918. (Currently amended) A system to ~~control communication over an Internet network, the system including:~~

~~a plurality of participator computers connected with a controller computer through the Internet network, each said participator computer respectively connected to the controller computer subsequent to sending a respective log in name and a password corresponding to a user identity, the controller computer enabled to control real time Internet communication between said users by using a control database storing for each said user identity a respective authorization for communicating human communication sound in some of said communications~~ distribute a communication via an Internet network, the system including:

a first computer connected to a computer system, the first computer being connected responsive to its sending information indicative of a login name and a password corresponding to a user identity;

a communication link between the first computer and a second computer; and

respective software stored in the first and second computers, the software stored in the first computer being programmed to communicate a pointer, from the first computer to the computer system, for receiving the communication at the first computer, the communication being sent in real time and via the Internet network, and the software stored in the second computer being programmed to receive the communication for the first computer at the second computer via the communication link, wherein the communication includes data representing at least one of

Petitioner Microsoft Corporation, Ex. 1002, p. 3397

video, a graphic, sound, or multimedia.

919. (Currently amended) The system of claim ~~600, wherein said sound is comprised of a human communication sound~~ 888, wherein the at least one type includes the type including a pointer, a the pointer is a pointer that produces a pointer-triggered message on demand.

920. (Currently amended) The system of claim ~~170, wherein one of said participator computers in said group is enabled to carry out the step of receiving some of said communications, said receiving including causing presentation of some of said communications by one of said participator computers in said group~~ 889, wherein the at least one type includes the type including a pointer, a the pointer is a pointer that produces a pointer-triggered message on demand.

921. (Currently amended) The system of claim [[409]]~~, wherein one of said participator computers in said group is enabled to carry out the step of receiving some of said communications, said receiving including causing presentation of some of said communications by one of said participator computers in said group~~ 890, wherein the at least one type includes the type including a pointer, a the pointer is a pointer that produces a pointer-triggered message on demand.

922. (Currently amended) The system of claim ~~604, wherein one of said participator computers in said group is enabled to carry out the step of receiving some of said communications, said receiving including causing presentation of some of said communications by one of said participator computers in said group~~ 897, wherein the at least one type includes the

Petitioner Microsoft Corporation, Ex. 1002, p. 3398

type including a pointer, a the pointer is a pointer that produces a pointer-triggered message on demand.

923. (Currently amended) The system of claim ~~843, wherein one of said participator computers is enabled to carry out the step of receiving some of said communications, said receiving including causing presentation of some of said communications~~ 898, wherein the at least one type includes the type including a pointer, a the pointer is a pointer that produces a pointer-triggered message on demand.

924. (Currently amended) The system of claim ~~600, wherein the plurality of participator computers are from more than an audience of a particular internet service provider~~ 899, wherein the at least one type includes the type including a pointer, a the pointer is a pointer that produces a pointer-triggered message on demand.

925. (Currently amended) The system of claim ~~876, further including the step of receiving some of said communications, said receiving including causing presentation of some of said communications~~ 900, wherein the at least one type includes the type including a pointer, a the pointer is a pointer that produces a pointer-triggered message on demand.

926. (Currently amended) The system of claim ~~877, wherein one of said participator computers is enabled to carry out the step of receiving some of said communications, said receiving including causing presentation of some of said communications~~ 904, wherein the at least one type includes the type including a pointer, a the pointer is a pointer that produces a pointer-triggered message on demand.

Petitioner Microsoft Corporation, Ex. 1002, p. 3399

927. (Currently amended) The system of claim ~~878, wherein one of said participator computers is enabled to carry out the step of receiving some of said communications, said receiving including causing presentation of some of said communications~~ 905, wherein the at least one type includes the type including a pointer, a the pointer is a pointer that produces a pointer-triggered message on deman.

928. (Currently amended) The system of claim ~~884, further including the step of receiving some of said communications, said receiving including causing presentation of some of said communications~~ 906, wherein the at least one type includes the type including a pointer, a the pointer is a pointer that produces a pointer-triggered message on demand.

929. (Currently amended) The ~~system of claim 885, wherein one of said participator computers is enabled to carry out the step of receiving some of said communications, said receiving including causing presentation of some of said communications~~ method of claim 916, wherein the at least one type includes a pointer.

930. (Currently amended) The ~~system of claim 891, wherein one of said participator computers is enabled to carry out the step of receiving some of said communications, said receiving including causing presentation of some of said communications~~ method of claim 916, wherein the at least one type includes audio.

931. (Currently amended) The ~~system of claim 892, further including the step of receiving some of said communications, said receiving including causing presentation of some of said communications~~ method of claim 916, wherein the at least one type includes video.

Petitioner Microsoft Corporation, Ex. 1002, p. 3400

932. (Currently amended) The ~~system of claim 893, further including the step of receiving some of said communications, said receiving including causing presentation of some of said communications~~ method of claim 916, wherein the at least one type includes a graphic.

933. (Currently amended) The ~~system of claim 894, wherein one of said participator computers is enabled to carry out the step of receiving some of said communications, said receiving including causing presentation of some of said communications~~ method of claim 916, wherein the at least one type includes multimedia.

934. (Currently amended) The ~~system of claim 895, wherein one of said participator computers is enabled to carry out the step of receiving some of said communications, said receiving including causing presentation of some of said communications~~ method of claim 916, wherein the at least one type includes a pointer and audio.

935. (Currently amended) The method of claim ~~166, wherein said step of using is carried out with said sound comprising a human communication sound~~ 916, wherein the at least one type includes a pointer and video.

936. (Currently amended) The ~~system of claim 901, further including the step of receiving some of said communications, said receiving including causing presentation of some of said communications~~ method of claim 916, wherein the at least one type includes a pointer and a graphic.

937. (Currently amended) The ~~system of claim 902, wherein one of said participator computers is enabled to carry out the step of receiving some of said communications,~~

Petitioner Microsoft Corporation, Ex. 1002, p. 3401

~~said receiving including causing presentation of some of said communications~~ method of claim 916, wherein the at least one type includes audio and a graphic.

938. (Currently amended) The ~~system of claim 903, wherein one of said participator computers is enabled to carry out the step of receiving some of said communications, said receiving including causing presentation of some of said communications~~ method of claim 916, wherein the at least one type includes audio and video.

939. (Currently amended) The ~~system of claim 599, wherein said sound is comprised of a human communication sound~~ method of claim 916, wherein the at least one type includes video and a graphic.

940. (Currently amended) The ~~system of claim 909, wherein one of said participator computers is enabled to carry out the step of receiving some of said communications, said receiving including causing presentation of some of said communications~~ method of claim 916, wherein the at least one type includes a pointer and audio and video.

941. (Currently amended) The ~~system of claim 910, wherein one of said participator computers is enabled to carry out the step of receiving some of said communications, said receiving including causing presentation of some of said communications~~ method of claim 916, wherein the at least one type includes a pointer and audio and a graphic.

942. (Currently amended) The ~~system of claim 916, further including the step of receiving some of said communications, said receiving including causing presentation of some of said communications~~ method of claim 916, wherein the at least one type includes a pointer and

Petitioner Microsoft Corporation, Ex. 1002, p. 3402

video and a graphic.

943. (Currently amended) The ~~system of claim 917, wherein one of said participator computers is enabled to carry out the step of receiving some of said communications, said receiving including causing presentation of some of said communications~~ method of claim 916, wherein the at least one type includes audio and video and a graphic.

944. (Currently amended) The ~~system of claim 918, wherein one of said participator computers is enabled to carry out the step of receiving some of said communications, said receiving including causing presentation of some of said communications~~ method of claim 916, wherein the at least one type includes a pointer and audio and video and a graphic.

945. (Currently amended) The method of claim ~~170, wherein the step of connecting is carried out with the plurality of participator computers from more than an audience of a particular internet service provider~~ 916, wherein the at least one type includes a pointer that produces a pointer-triggered message on demand.

946. (Currently amended) The ~~system of claim 435, wherein the plurality of participator computers are from more than an audience of a particular internet service provider~~ method of claim 930, wherein the at least one type includes a pointer that produces a pointer-triggered message on demand.

947. (Currently amended) The method of claim ~~893, wherein the step of connecting is carried out with the plurality of participator computers from more than an audience of a particular internet service provider~~ 931, wherein the at least one type includes a pointer that produces a

Petitioner Microsoft Corporation, Ex. 1002, p. 3403

pointer-triggered message on demand.

948. (Currently amended) The ~~system of claim 895, wherein the plurality of participator computers are from more than an audience of a particular internet service provider~~ method of claim 933, wherein the at least one type includes a pointer that produces a pointer-triggered message on demand.

949. (Currently amended) An Internet communication system, the system including:

~~at least one controller computer;~~

~~two or more participator computers, each said computer taking part in the communication system, each said participator computer connected to an input device and an output device, the input device receiving input information from a respective user, the output device presenting messages, each said user having a user identity identifying the user;~~

~~a communication path between said at least one controller computer and each said participator computer, a portion of the communication path passing through or by way of the Internet;~~

~~computer software running on said at least one controller computer regulating steps including:~~

~~storing a set of privileges corresponding to each said user identity, the set including a criteria to receive non-textual communication;~~

~~deciding whether a participator computer can be a member in one of a number of communication channels, each said communication channel allowing communication between two or more of the participator computers by way of said at least one controller computer, said deciding performed in accordance with previously defined criteria, said criteria including examining whether~~

Petitioner Microsoft Corporation, Ex. 1002, p. 3404

~~a particular user identity is authorized to access the communication system;~~

~~delivering user messages according to the previously defined criteria in real time between receipt and delivery of the messages by said at least one controller computer so as to allow the user to access the user messages substantially instantaneously; and~~

~~wherein at least some of the user messages are comprised of two or more data types from a group including text, audio, graphics, images, and video or comprised of a URL text that points to at least one additional data type other than text, said URL being receivable on demand~~ a computer system including a server computer;

a plurality of computers, each of the plurality of computers connected to an input device and an output device, and

a communication link between the computer system including a server computer and each of the plurality of computers, each of the plurality of computers being connected responsive to its sending information indicative of a login name and password, each respective login name and password corresponding to a respective user identity,

wherein the server computer is programmed to:

allow one of the plurality of computers to be a member in one of a plurality of communication channels, each said communication channel allowing communication between at least some of the plurality of computers by way of the communication link,

cause graphical multimedia associated with a first of the login names to be presented at one of the output devices corresponding to a second of the user identities,

the server computer being further programmed to cause the user messages to be delivered over or by way of the Internet network, in at least one of the communication channels, and in real time between receipt and delivery of the user messages so as to allow access to the user messages,

wherein at least some of the user messages individually include at least two of text,

Petitioner Microsoft Corporation, Ex. 1002, p. 3405

a sound, a graphic, an image, and a video.

950. (Currently amended) The system of claim 949, wherein at least one of said user messages includes ~~an address that instructs any of the participator computers to locate another media type upon action by one of the users~~ a uniform resource locater, whereby the uniform resource locater produces a message upon demand.

951. (Currently amended) The system of claim 949, wherein at least one of said user messages includes ~~an address that commands any of the participator computers to locate an additional message and present the additional message at a respective output device~~ the uniform resource locator, whereby the uniform resource locator commands at least one of the plurality of computers corresponding to the receipt to locate an additional message and present the additional message at the respective output device.

952. (Currently amended) The system of claim 949, wherein ~~said deciding performed in accordance with previously defined criteria is carried out with said criteria including examining a password in connection with one of said user identities~~ the computer system is further programmed to determine whether the receipt is censored, and to cause the receipt if the receipt is not censored.

953. (Currently amended) A method ~~employing computer devices to make decisions and distribute communication~~ of communicating via an Internet network, the method including ~~the steps of~~:

establishing a communication path between ~~at least one controller~~ a computer system and each of a plurality of ~~participator~~ computers, ~~the communication path passing through~~

Petitioner Microsoft Corporation, Ex. 1002, p. 3406

~~or by way of an Internet network, each of said computer taking part in a system,~~ each of ~~said communicator~~ the plurality of computers respectively connected to an input device and to an output device, each of the plurality of computers being connected responsive to its sending information ~~said input devices receiving input information from a respective user of the system, each of the respective output devices presenting user messages, each said user having a user identity identifying the user;~~

~~programming the at least one controller computer to direct communication of user messages from one or more of the participator computers to one or more other of the participator computers;~~

~~storing a set of privileges corresponding to each said user identity, the set including a criteria to receive non-textual communication;~~

~~deciding with the at least one controller computer whether a participator computer can be a member in one of a number of communication channels, each said communication channel allowing communication between two or more of the participator computers by way of the at least one controller computer, said deciding performed according to previously defined criteria, the criteria including an examination of whether a particular user identity is authorized to access the system;~~

~~delivering the user messages according to the previously defined criteria in real time between receipt and delivery of the messages by said at least one controller computer so as to allow the user to access the user messages substantially instantaneously; and~~

~~wherein at least some of the user messages are comprised of two or more data types from a group including text, audio, graphics, images, and video or comprised of a URL text that points to at least one additional data type other than text, said URL being receivable on demand~~ indicative of a login name and password, each respective login name and password corresponding to a respective user identity,

Petitioner Microsoft Corporation, Ex. 1002, p. 3407

allowing a first one of the plurality of computers to be a member of one of a plurality of communication channels, and

storing, for a first of the user identities, an authorization for allowing or disallowing presentment of graphical multimedia,

based on the authorization, presenting the graphical multimedia at the output device corresponding to a second of the user identities,

sending and receiving, in real time, user messages between two or more of the plurality of computers, over or by way of the Internet network, in at least one of the communication channels, thereby allowing access to the user messages,

wherein at least some of the user messages individually include a uniform resource locator that points to data other than text or ascii.

954. (Currently amended) The method of claim 953, ~~wherein said step of delivering includes delivering an address or URL of an additional user message and computer instructions that require at least one of the participator computers to locate the additional user message at the address or URL~~ further including instructing at least one of the plurality of computers to locate an additional user message on demand via the uniform resource locator.

955. (Currently amended) ~~The system of claim 599, wherein said member public data reference is a URL~~ A method communicating via an Internet network, the method including:

connecting a plurality of computers to a computer system, each of the plurality of computers connected responsive to receiving at the computer system information indicative of a respective login name and password corresponding to a respective user identity;

determining whether a first of the user identities and a second of the user identities are able to form a group for sending and for receiving communications in real time;

Petitioner Microsoft Corporation, Ex. 1002, p. 3408

determining whether at least one of the first user identity and the second user identity, individually, is censored from receiving in the communications at least one of a pointer, video, audio, graphic, or multimedia; and

if the first and the second user identities are able to form the group, forming the group for sending the communications, and receiving the communications that are not censored based on the individual user identity, wherein the receiving is in real time via the Internet network, and not receiving the communications that are censored.

956. (Currently amended) ~~The system of claim 599, wherein said member public data reference is a pointer~~ A method communicating via an Internet network, the method including:

connecting a plurality of computers to a computer system, each of the plurality of computers connected responsive to receiving at the computer system information indicative of a respective login name and password corresponding to a respective user identity;

determining whether a first of the user identities and a second of the user identities are able to form a group for sending and for receiving communications in real time by determining whether at least one of the first user identity and the second user identity, individually, is censored from receiving in the communications at least one of a pointer, video, audio, graphic, or multimedia; and

if the first and the second user identities are able to form the group, forming the group for sending the communications, and receiving the communications in real time via the Internet network.

957. (Currently amended) ~~The method of claim 1, wherein said step of connecting is carried out by at least one of the participator computers connecting to the Internet network without any version of participator software, receiving the participator software over the Internet network,~~

Petitioner Microsoft Corporation, Ex. 1002, p. 3409

~~and obtaining the respective user identity over the Internet network~~ A method communicating via an Internet network, the method including:

connecting a plurality of computers to a computer system, each of the plurality of computers connected responsive to receiving at the computer system information indicative of a respective login name and password corresponding to a respective user identity;

determining whether a first of the user identities and a second of the user identities are able to form a group for sending and for receiving communications in real time;

determining whether at least one of the first user identity and the second user identity, individually, is censored from sending in the communications at least one of a pointer, video, audio, graphic, or multimedia; and

if the first and the second user identities are able to form the group, forming the group, sending the communications that are not censored based on the individual user identity, and receiving the communications in real time via the Internet network.

958. (Currently amended) ~~The method of claim 170, wherein said step of connecting is carried out by at least one of the participator computers connecting to the Internet network without any version of participator software, receiving the participator software over the Internet network, and obtaining the respective user identity over the Internet network~~ A method communicating via an Internet network, the method including:

connecting a plurality of computers to a computer system, each of the plurality of computers connected responsive to receiving at the computer system information indicative of a respective login name and password corresponding to a respective user identity;

determining whether a first of the user identities and a second of the user identities are able to form a group for sending and for receiving communications in real time by determining whether at least one of the first user identity and the second user identity, individually, is censored

Petitioner Microsoft Corporation, Ex. 1002, p. 3410

from sending in the communications at least one of a pointer, video, audio, graphic, or multimedia; and

if the first and the second user identities are able to form the group, forming the group for sending the communications, and receiving the communications in real time via the Internet network.

959. (Currently amended) ~~The method of claim 409, wherein said step of connecting is carried out by at least one of the participator computers connecting to the Internet network without any version of participator software, receiving the participator software over the Internet network, and obtaining the respective user identity over the Internet network~~ A system to communicate via an Internet network, the system including:

a plurality of computers connected to a computer system, each of the plurality of computers being connected responsive to receipt at the computer system of information indicative of a respective login name and password corresponding to a respective user identity, the computer system being programmed to:

determine whether a first of the user identities and a second of the user identities are able to form a group capable of sending and receiving communications in real time;

determine whether at least one of the first user identity and the second user identity, individually, is censored from receiving in the communications at least one of a pointer, video, audio, graphic, or multimedia, and

if the first and the second user identities are able to form the group, form the group for sending the communications, and

cause the plurality of computers in the group to receive, in real time via the Internet network, the communications that are not censored based on the individual user identity, and

cause the plurality of computers in the group to not receive the communications that

Petitioner Microsoft Corporation, Ex. 1002, p. 3411

are censored based on the individual user identity.

960. (Currently amended) ~~The method of claim 876, wherein said step of connecting is carried out by at least one of the participator computers connecting to the Internet network without any version of participator software, receiving the participator software over the Internet network, and obtaining the respective user identity over the Internet network~~ A system to communicate via an Internet network, the system including:

a plurality of computers connected to a computer system, each of the plurality of computers being connected responsive to receipt at the computer system of information indicative of a respective login name and password corresponding to a respective user identity, the computer system being programmed to:

determine whether a first of the user identities and a second of the user identities are able to form a group capable of sending and receiving communications in real time by determining whether at least one of the first user identity and the second user identity, individually, is censored from receiving in the communications at least one of a pointer, video, audio, graphic, or multimedia; and

if the first and the second user identities are able to form the group, cause the group to be formed to send the communications, and cause the plurality of computers in the group receive, in real time via the Internet network, the communications that are not censored based on the individual user identity.

961. (Currently amended) ~~The method of claim 878, wherein said step of connecting is carried out by at least one of the participator computers connecting to the Internet network without any version of participator software, receiving the participator software over the Internet network, and obtaining the respective user identity over the Internet network~~ A system to

Petitioner Microsoft Corporation, Ex. 1002, p. 3412

communicate via an Internet network, the system including:

a plurality of computers connected to a computer system, each of the plurality of computers being connected responsive to receipt at the computer system of information indicative of a respective login name and password corresponding to a respective user identity, the computer system being programmed to:

determine whether a first of the user identities and a second of the user identities are able to form a group for sending and for receiving communications in real time;

determine whether at least one of the first user identity and the second user identity, individually, is censored from sending in the communications at least one of a pointer, video, audio, graphic, or multimedia; and

if the first and the second user identities are able to form the group, cause the group to be formed and the communications that are not censored based on the individual user identity to be sent, and cause the communications to be received in real time via the Internet network.

962. (Currently amended) ~~The method of claim 884, wherein said step of connecting is carried out by at least one of the participator computers connecting to the Internet network without any version of participator software, receiving the participator software over the Internet network, and obtaining the respective user identity over the Internet network~~ A system to communicate via an Internet network, the system including:

a plurality of computers connected to a computer system, each of the plurality of computers being connected responsive to receipt at the computer system of information indicative of a respective login name and password corresponding to a respective user identity, the computer system being programmed to:

determine whether a first of the user identities and a second of the user identities are able to form a group capable of sending and receiving communications in real time by

Petitioner Microsoft Corporation, Ex. 1002, p. 3413

determining whether at least one of the first user identity and the second user identity, individually, is censored from sending in the communications at least one of a pointer, video, audio, graphic, or multimedia; and

if the first and the second user identities are able to form the group, cause the group to be formed to send and receive the communications between members of the group, wherein the communications are received in real time via the Internet network.

963. (Currently amended) The method of claim ~~892, wherein said step of connecting is carried out by at least one of the participator computers connecting to the Internet network without any version of participator software, receiving the participator software over the Internet network, and obtaining the respective user identity over the Internet network~~ 939, further including allowing the first computer to communicate a pointer that produces a pointer-triggered message on demand.

964. (Currently amended) The method of claim ~~893, wherein said step of connecting is carried out by at least one of the participator computers connecting to the Internet network without any version of participator software, receiving the participator software over the Internet network, and obtaining the respective user identity over the Internet network~~ 940, further including allowing the first computer to communicate a pointer that produces a pointer-triggered message on demand.

965. (Currently amended) The method of claim ~~910, wherein said step of connecting is carried out by at least one of the participator computers connecting to the Internet network without any version of participator software, receiving the participator software over the Internet network, and obtaining the respective user identity over the Internet network~~ 941, further

Petitioner Microsoft Corporation, Ex. 1002, p. 3414

including allowing the first computer to communicate a pointer that produces a pointer-triggered message on demand.

966. (Currently amended) The method of claim ~~916, wherein said step of connecting is carried out by at least one of the participator computers connecting to the Internet network without any version of participator software, receiving the participator software over the Internet network, and obtaining the respective user identity over the Internet network~~ 942, further including allowing the first computer to communicate a pointer that produces a pointer-triggered message on demand.

967. (Currently amended) The method of claim ~~953, wherein said step of connecting is carried out by at least one of the participator computers connecting to the Internet network without any version of participator software, receiving the participator software over the Internet network, and obtaining the respective user identity over the Internet network~~ 943, further including allowing the first computer to communicate a pointer that produces a pointer-triggered message on demand.

968. (Currently amended) The method of claim ~~165, wherein said step of connecting is carried out is carried out by at least one of the participator computers connecting to the Internet network without any version of the participator software, receiving the participator software over the Internet network, and obtaining the respective user identity over the Internet network~~ 944, further including allowing the first computer to communicate a pointer that produces a pointer-triggered message on demand.

969. (Currently amended) The method of claim ~~1, further including the step of~~

Petitioner Microsoft Corporation, Ex. 1002, p. 3415

~~assigning a temporary moderator authorization corresponding one of the user identities being in the group~~ 945, further including allowing the first computer to communicate a pointer that produces a pointer-triggered message on demand.

970. (Currently amended) The method of claim ~~170, further including the step of assigning a temporary moderator authorization corresponding one of the user identities being in the group~~ 916, further including presenting an option to the plurality of computers to access the computer system with at least two client software alternatives.

971. (Currently amended) The ~~system of claim 871, wherein the control database includes a content control used in the controlling~~ method of claim 916, further including determining whether receipt of a communication is censored based on content.

972. (Currently amended) The ~~system of claim 599, wherein said member public data reference is a URL~~ method of claim 916, further including determining whether receipt of a communication is censored based on age.

973. (Currently amended) ~~The system of claim 599, wherein said member public data reference is a pointer~~ A method communicating via an Internet network, the method including:

connecting a plurality of computers to a computer system, each of the plurality of computers connected responsive to receiving at the computer system information indicative of a respective login name and password corresponding to a respective user identity;

determining whether a first of the user identities and a second of the user identities are able to form a group for sending and for receiving communications in real time;

determining whether at least one of the first user identity and the second user

Petitioner Microsoft Corporation, Ex. 1002, p. 3416

identity, individually, is censored from receiving in the communications at least one of a pointer, video, audio, graphic, or multimedia; and

if the first and the second user identities are able to form the group, forming the group for sending the communications, and receiving the communications that are not censored based on the individual user identity, wherein the receiving is in real time via the Internet network, and not receiving the communications that are censored

Please add new claims as follows:

974. (new) A method communicating via an Internet network, the method including:

connecting a plurality of computers to a computer system, each of the plurality of computers connected responsive to receiving at the computer system information indicative of a respective login name and password corresponding to a respective user identity;

determining whether a first of the user identities and a second of the user identities are able to form a group for sending and for receiving communications in real time by determining whether at least one of the first user identity and the second user identity, individually, is censored from receiving in the communications at least one of a pointer, video, audio, graphic, or multimedia; and

if the first and the second user identities are able to form the group, forming the group for sending the communications, and receiving the communications in real time via the Internet network.

975. (new) A method communicating via an Internet network, the method including:

Petitioner Microsoft Corporation, Ex. 1002, p. 3417

connecting a plurality of computers to a computer system, each of the plurality of computers connected responsive to receiving at the computer system information indicative of a respective login name and password corresponding to a respective user identity;

determining whether a first of the user identities and a second of the user identities are able to form a group for sending and for receiving communications in real time;

determining whether at least one of the first user identity and the second user identity, individually, is censored from sending in the communications at least one of a pointer, video, audio, graphic, or multimedia; and

if the first and the second user identities are able to form the group, forming the group, sending the communications that are not censored based on the individual user identity, and receiving the communications in real time via the Internet network

976. (new) A method communicating via an Internet network, the method including:

connecting a plurality of computers to a computer system, each of the plurality of computers connected responsive to receiving at the computer system information indicative of a respective login name and password corresponding to a respective user identity;

determining whether a first of the user identities and a second of the user identities are able to form a group for sending and for receiving communications in real time by determining whether at least one of the first user identity and the second user identity, individually, is censored from sending in the communications at least one of a pointer, video, audio, graphic, or multimedia; and

if the first and the second user identities are able to form the group, forming the group for sending the communications, and receiving the communications in real time via the Internet network.

Petitioner Microsoft Corporation, Ex. 1002, p. 3418

977. (new) A method of communicating via an Internet network, the method including:

presenting an option to a plurality of computers to access a computer system with at least one of two client software alternatives, wherein the option is exercised by providing a respective user name and password respectively corresponding to a user identity to at least one of the client software alternatives, wherein both of the two client software alternatives cause the respective user identities to be recognized by the computer system and allows at least some of the plurality of computers to form at least one group for sending communications, wherein at least some of the communications are received in real time via the Internet network, and wherein the at least one of client software alternatives allows the computer system to determine whether at least one of the user identities, individually, is censored from data representing at least one of a pointer, video, audio, graphic, or multimedia such that the data that is censored is not presented by the corresponding computer.

978. (new) A system to communicate via an Internet network, the system including:

a plurality of computers connected to a computer system, each of the plurality of computers being connected responsive to receipt at the computer system of information indicative of a respective login name and password corresponding to a respective user identity, the computer system being programmed to:

determine whether a first of the user identities and a second of the user identities are able to form a group capable of sending and receiving communications in real time;

determine whether at least one of the first user identity and the second user identity, individually, is censored from receiving in the communications at least one of a pointer, video, audio, graphic, or multimedia, and

Petitioner Microsoft Corporation, Ex. 1002, p. 3419

if the first and the second user identities are able to form the group, form the group for sending the communications, and

cause the plurality of computers in the group to receive, in real time via the Internet network, the communications that are not censored based on the individual user identity, and cause the plurality of computers in the group to not receive the communications that are censored based on the individual user identity.

979. (new) A system to communicate via an Internet network, the system including:

a plurality of computers connected to a computer system, each of the plurality of computers being connected responsive to receipt at the computer system of information indicative of a respective login name and password corresponding to a respective user identity, the computer system being programmed to:

determine whether a first of the user identities and a second of the user identities are able to form a group capable of sending and receiving communications in real time by determining whether at least one of the first user identity and the second user identity, individually, is censored from receiving in the communications at least one of a pointer, video, audio, graphic, or multimedia; and

if the first and the second user identities are able to form the group, cause the group to be formed to send the communications, and cause the plurality of computers in the group receive, in real time via the Internet network, the communications that are not censored based on the individual user identity.

980. (new) A system to communicate via an Internet network, the system including:

Petitioner Microsoft Corporation, Ex. 1002, p. 3420

a plurality of computers connected to a computer system, each of the plurality of computers being connected responsive to receipt at the computer system of information indicative of a respective login name and password corresponding to a respective user identity, the computer system being programmed to:

determine whether a first of the user identities and a second of the user identities are able to form a group for sending and for receiving communications in real time;

determine whether at least one of the first user identity and the second user identity, individually, is censored from sending in the communications at least one of a pointer, video, audio, graphic, or multimedia; and

if the first and the second user identities are able to form the group, cause the group to be formed and the communications that are not censored based on the individual user identity to be sent, and cause the communications to be received in real time via the Internet network.

981. (new) A system to communicate via an Internet network, the system including:

a plurality of computers connected to a computer system, each of the plurality of computers being connected responsive to receipt at the computer system of information indicative of a respective login name and password corresponding to a respective user identity, the computer system being programmed to:

determine whether a first of the user identities and a second of the user identities are able to form a group capable of sending and receiving communications in real time by determining whether at least one of the first user identity and the second user identity, individually, is censored from sending in the communications at least one of a pointer, video, audio, graphic, or multimedia; and

if the first and the second user identities are able to form the group, cause the group

Petitioner Microsoft Corporation, Ex. 1002, p. 3421

to be formed to send and receive the communications between members of the group, wherein the communications are received in real time via the Internet network.

982. (new) A method of communication over an Internet network, the method including:

connecting a computer system with a plurality of computers;

sending information indicative of a respective login name and password corresponding to a first user identity from a first of the plurality of computers;

receiving information indicative of a login name and a password corresponding to a second user identity from a second of the plurality of computers; and

allowing the first user identity and the second user identity to send and receive communications on at least one of a plurality of channels, wherein at least some of the communications are received in real time via the Internet network, the computer system being programmed to determine whether at least one of the user identities, individually, is censored from data in one of the channels, the data representing at least one of a pointer, video, audio, graphic, or multimedia, such that the data that is censored is not presented by the corresponding computer.

983. (new) The method of claim 980, wherein the data includes a pointer that produces a pointer-triggered message on demand.

984. (new) The method of claim 980, further including:

determining whether the first user identity is censored from the data by determining whether a parameter corresponding to

Petitioner Microsoft Corporation, Ex. 1002, p. 3422

the first user identity has been determined by a user corresponding to an other of the user identities.

985. (new) A method of communicating via an Internet network, the method including:

connecting a computer system with a plurality of computers;

sending, from each of the plurality of computers, a respective user identity associated with a login name and a password;

determining whether at least one of a first of the user identities is censored from graphical multimedia; and

allowing at least a first of the user identities and a second of the user identities to form a group; and

sending and receiving the communications in real time, via the Internet network, between the computers in the group, wherein at least some of the communications include data representing at least one of a pointer, video, audio, a graphic, multimedia, or at least one of text or ascii, and not allowing the graphical multimedia that is censored to be presented at one of the computers corresponding to the one of the user identities.

986. (new) A method of communicating via an Internet network, the method including:

connecting a computer system with a plurality of computers;

sending, from each of the plurality of computers, a respective user identity associated with a login name and a password;

determining whether at least one of a first of the user identities is censored from graphical data; and

Petitioner Microsoft Corporation, Ex. 1002, p. 3423

allowing at least a first of the user identities and a second of the user identities to form a group; and

sending and receiving the communications in real time, via the Internet network, between the computers in the group, wherein at least some of the communications include data representing at least one of a pointer, video, audio, a graphic, multimedia, or at least one of text or ascii, and not allowing the graphical data that is censored to be presented at one of the computers corresponding to the one of the user identities.

987. (new) A method of communicating via an Internet network, the method including:

connecting a computer system with a plurality of computers;

sending, from each of the plurality of computers, a respective user identity associated with a login name and a password;

determining whether at least one of a first of the user identities is censored from data representing graphical multimedia; and

allowing at least a first of the user identities and a second of the user identities to form a group; and

sending and receiving the communications in real time, via the Internet network, between the computers in the group, wherein at least some of the communications include data representing at least one of a pointer, video, audio, a graphic, multimedia, or at least one of text or ascii, and not allowing the data representing graphical multimedia that is censored to be presented at one of the computers corresponding to the one of the user identities.

988. (new) A method of communicating via an Internet network, the method including:

Petitioner Microsoft Corporation, Ex. 1002, p. 3424

connecting a computer system with a plurality of computers;

sending, from each of the plurality of computers, a respective user identity associated with a login name and a password;

determining whether at least one of a first of the user identities is censored from graphical data; and

allowing at least a first of the user identities and a second of the user identities to form a group; and

sending and receiving the communications in real time, via the Internet network, between the computers in the group, wherein at least some of the communications include data representing at least one of a pointer, video, audio, a graphic, multimedia, or at least one of text or ascii, and not allowing the graphical data that is censored to be presented at one of the computers corresponding to the one of the user identities.

989. (new) A method of communicating via an Internet network, the method including:

connecting, responsive to sending information indicative of a respective login name and password corresponding to a respective user identity, a plurality of computers with computer system;

storing at least one permission corresponding to a first of the user identities, the permission allowing or disallowing communication of a type of media;

changing, responsive to a second of the users, the stored permission; and

if the first user identity has permission to allow the communication, the sending the communications and receiving and presenting the communications, wherein the receiving is in real time and via the Internet network, and not presenting the data that is censored to the corresponding output device.

Petitioner Microsoft Corporation, Ex. 1002, p. 3425

990. (new) The method of claim 989, wherein the data represents a pointer.

991. (new) The method of claim 989, wherein the data represents a pointer that produces a pointer-triggered message on demand.

992. (new) The method of claim 989, wherein the data represents video.

993. (new) The method of claim 989, wherein the data represents audio.

994. (new) The method of claim 989, wherein the data represents a graphic.

995. (new) The method of claim 989, wherein the data represents multimedia.

Petitioner Microsoft Corporation, Ex. 1002, p. 3426

II. Remarks

Applicant understands that the Amendments made on September 8, 2005, and October 24, 2005, were not entered. The Examiner is requested to enter the Information Disclosure Statement, PTO Form 1449, and Cited Art filed on those dates. For the convenience of the Examiner, the Remarks from the September 8, 2005, filing and October 24, 2005, filing are set out below.

---Remarks from September 8, 2005----

Formal Drawings were submitted on May 24, 2002, included Figures 1 and 3, corresponding to the Certificate of Correction issued in the parent application, U.S. Patent No. 5,956,491. The Examiner indicated that she would treat this filing of the Formal Drawings as an Amendment to the Drawings, and Applicant thanks the Examiner for that accommodation. It is believed that no new matter has been added.

Applicant filed two 1449 forms on June 10, 2005. Although it was believed that the cited art was previously filed, out of an abundance of caution, Applicant provided the Examiner with copies of the art cited in those 1449 forms.

In addition, as the Examiner is aware, the parent to the instant patent application has been asserted against America Online. Information from the litigation was provided to the Examiner on June 9, 2005, and a1449 form listing that information is being filed herewith. Further or more up to date information concerning the litigation can be found by contacting the Clerk of Court for the Northern District of Illinois, with certain information believed to be available over the Internet.

Applicant also expresses gratitude for the Examiner's extensive efforts in handling the present application. The Examiner has shown distinguished comprehension of the application, claims, cited art and other filings, all of which is greatly appreciated. As discussed with the Examiner, for ease of examination, the order of the dependent claims has been changed into

Petitioner Microsoft Corporation, Ex. 1002, p. 3427

blocks corresponding to the independent claims, and for the convenience of the Examiner, a clean copy of the amended claims is included herewith.

The preceding Office Action rejecting claims has been addressed with the previous Response, and the Remarks therein are applicable to the claims amended and added herein as well, but in truth, the instant amendment does not correspond to any rejection. Claims pending prior to this amendment are intended to be taken up in a subsequent continuing application, and it is respectfully requested that exigencies of litigation not be confused with prosecution estoppel.

Respectfully, the application is believed to be in condition for allowance, and favorable action is requested. If the prosecution of this case can be in any way advanced by a telephone discussion or by a personal interview, the Examiner is requested to call the undersigned at (312) 240-0824. The undersigned respectfully requests an opportunity to meet with the Examiner should it be helpful in furthering prosecution.

----Remarks from October 24, 2005---

The Examiner's attention is drawn to the remarks in the Amendment and Response filed March 21, 2005, and the remarks in the Supplemental Amendment filed September 8, 2005.

The present filing conveys an additional 1449 form and information from the litigation involving the parent patent and AOL. Applicant again sincerely apologizes for the extensive nature of the present application, and again requests that consideration be given to the circumstances of litigation, such that extensive 1449 form filings come from prudence in ensuring that no criticism can be made that anything material has been withheld from the PTO.

The present filing also corrects or changes claim language. The preceding Office Action has been addressed with the Amendment and Response, and the remarks therein, in view of the remarks set out in the and Supplemental Amendment and Response, carry forward hereto and are applicable to the herein new and amended claims as well. However, it is again noted that the instant amendment is not motivated by any rejection, and Applicant intends to pursue

Petitioner Microsoft Corporation, Ex. 1002, p. 3428

previously pending claims in subsequent continuing application(s). As mentioned in Applicant's Supplemental Amendment, as discussed with the Examiner, Applicant has carefully amended the claims into groups for the Examiner's renumbering convenience. And for the Examiner's further convenience, a clean copy of the claims is being filed herewith.

Respectfully, the application is believed to be in condition for allowance, and favorable action is requested. If the prosecution of this case can be in any way advanced by a telephone discussion or by a personal interview, the Examiner is requested to call the undersigned at (312) 240-0824. Also, the undersigned respectfully requests a personal interview with the Examiner if there be any issue that impedes allowance.

Petitioner Microsoft Corporation, Ex. 1002, p. 3429

III. Conclusion

Respectfully, the application is believed to be in condition for allowance, and favorable action is requested. If the prosecution of this case can be in any way advanced by a telephone discussion or personal interview, the Examiner is requested to call the undersigned at (312) 240-0824.

The Commissioner is hereby authorized to charge any fees associated with the above-identified patent application or credit any overcharges to Deposit Account No. 50-0235, and if any extension of time is needed, this shall be deemed a petition therefore. Please direct all communication to the undersigned at the address given below.

Respectfully submitted,

Date: November 17, 2006

Peter K. Trzyna
(Reg. No. 32,601)

P. O. Box 7131
Chicago, Illinois 60680-7131

(312) 240-0824

Petitioner Microsoft Corporation, Ex. 1002, p. 3430

I. FIELD OF INVENTION

This invention is directed to an apparatus, a manufacture, and methods for making and using the same, in a field of digital electrical computer systems. More particularly, the present invention is directed to a digital electrical computer system involving a plurality of participator computers linked by a network to at least one of a plurality of participator computers, the participator computers operating in conjunction with the controller computer to handle multiplexing operations for communications involving groups of some of the participator computers.

II. BACKGROUND OF THE INVENTION

Multiplexing group communications among computers ranges from very simple to very complex communications systems. At a simple level, group communications among computers involve electronic mail sent in a one way transmission to all those in a group or subgroup using, say, a local area network. Arbitrating which computers receive electronic mail is a rather well understood undertaking.

On a more complex level, corporations may link remote offices to have a conference by computer. A central computer can control the multiplexing of what appears as an electronic equivalent to a discussion involving many individuals.

Even more complex is linking of computers to communicate in what has become known as a "chat room." Chat room communications can be ~~mere~~ text, ~~such as that offered locally on a file server, or can involve graphics and certain multimedia capability~~, as exemplified by such Internet service providers as America On Line. Multiplexing in multimedia is more complex for this electronic environment.

The ~~On the Internet, "chat room" communications analogous to America On Line have not been developed, at least in part because~~ Internet was structured for one-way

Petitioner Microsoft Corporation, Ex. 1002, p. 3431

FIG. 15 is an illustration of a private message displayed on the private message window on the new channel screen of the present invention.

FIG. 16 is a further illustration of the private message on the private message window on new channel screen of the present invention.

FIG. 17 is an illustration of an attribute revocation on the new channel screen of the present invention.

FIG. 18 is a further illustration of the new channel screen of the present invention.

FIG. 19 is an illustration of the channel list window screen of the present invention.

FIG. 20 is an illustration of the toggle posting option on a screen of the present invention.

FIG. 21 is an illustration of a moderated version of the new channel screen of the present invention.

FIG. 22 is an illustration of a communication on a moderation window screen of the present invention.

FIG. 23 is an illustration of the communication passed on to the moderated version of the new channel screen of the present invention.

FIG. 24 is an illustration of a communication, for sending a graphical multimedia message, on to the moderated version of the new channel screen of the present invention

FIG. 25 is an illustration, showing the name of the URL, on a moderated version of the new channel screen of the present invention.

~~FIG. 25 is an illustration of a communication, for passing a URL (Uniform Resource Locator) to channel members on a moderator pull-down screen of the present~~

Petitioner Microsoft Corporation, Ex. 1002, p. 3432

~~invention.~~

FIG. 26 is an illustration of data associated with the graphical multimedia message on a moderated version of the new channel screen of the present invention.

FIG. 27 is an illustration of a proprietary editor, suitable for a dialog to change tokens, on a screen of the present invention.

FIG. 28 is an illustration of a text-based interface login/password screen of the present ~~proprietary~~ invention.

FIG. 29 is an illustration of a text-based interface group screen of the present invention.

FIG. 30 is another illustration of a text-based interface group screen of the present invention.

FIG. 31 is another illustration of a text-based interface group screen of the present invention.

FIG. 32 is an illustration of a text-based interface private message screen of the present invention.

FIG. 33 is another illustration of a text-based interface private message screen of the present invention.

FIG. 34 is another illustration of a text-based interface group with moderator screen of the present invention.

V. DETAILED DESCRIPTION OF THE DRAWINGS

In providing a detailed description of a preferred embodiment of the present invention, reference is made to an appendix hereto, including the following items.

Appendix Contents

ALLUSER C
ALLUSER H

Petitioner Microsoft Corporation, Ex. 1002, p. 3433

participator computers 5. For a synchronous notification, a participator computer 5 must interrogate the system 1 for a message.

With regard to the arbitrating of the controller computer 3 is directed by the controller computer program 2 to use "identity tokens", which are pieces of information associated with user identity. The pieces of information are stored in memory ~~11~~ in a control computer database, along with personal information about the user, such as the user's age. The control computer database serves as a repository of tokens for other programs to access, thereby affording information to otherwise independent computer systems. In the database, the storage of tokens can be by user, group, and content, and distribution controls can also be placed on the user's tokens as well as the database.

Each token is used to control the ability of a user to gain access to other tokens in a token hierarchy arbitration process. The arbitration also includes controlling a user's ability to moderate communications involving a group or subgroup of the participator computers 5. Once in a group, temporary tokens are assigned for priority to moderate/submoderate groups (a group is sometimes known as a channel in multiplexing terminology).

Accordingly, tokens are used by the controller computer 5 to control a user's group priority and moderation privileges, as well as controlling who joins the group, who leaves the group, and the visibility of members in the group. Visibility refers to whether a user is allowed to know another user is in the chat group.

Tokens are also used to permit a user's control of identity, and in priority contests between 2 users, for example, a challenge as to whether a first user can see a second user.

Censorship, which broadly encompasses control of what is said in a group, is also arbitrated by means of the tokens. Censorship can control of access to system 1 by

Petitioner Microsoft Corporation, Ex. 1002, p. 3434

Channel window for all members to see (at FIG. 23).

DMARKS now wishes to send a graphical multimedia message. This implementation sends graphical multimedia images by allowing a channel member to specify an Internet URL of a graphical multimedia resource to be presented to the group members. In this example, DMARKS wishes to send the URL ~~www.ais.net (~~corresponding to the World Wide Web home page of American Information Systems, Inc.~~)~~ to the channel members. DMARKS enters the URL into the response window, and selects "Send URL" from the Moderator pull-down menu (at FIG. 24).

The controller computer 5 now passes the URL to the channel members. This participator software 4 performs two actions in response to the graphical multimedia display request. The first is to put the name of the URL onto the transcript of the group's channel, so that it can be read by group members. The second response is to have the participator software show the data associated with the graphical multimedia message in a human interpretable way (at FIG. 25). To do this, the participator software 6 either uses built in rules to decide how the graphical multimedia data is to be presented, or locates another program suitable to present the data. In this case, the software 6 is utilizing Netscape NavigatorÔ, a program for displaying graphical multimedia documents specified by a URL (at FIG. 26). Inside the Navigator window, the graphical multimedia content, the home page of AIS, is shown.

Finally, DMARKS wishes to manually modify the attribute tokens associated with the user (at FIG. 27). The user invokes the Property Editor dialog, which allows the user to view and change the tokens associated with a user. A property of a given user is determined by the Identifier and Property names. An old value of the property is shown, and a token value can be changed in the "New Value" field. With this property editor, a user with sufficient permissions (tokens) can change any of the tokens or security parameters of any user, or a

Petitioner Microsoft Corporation, Ex. 1002, p. 3435

AMENDED ABSTRACT

~~A computerized human communication arbitrating and distributing system, including a controller digital computer and a plurality of participator digital computers, each of the participator computers including an input device for receiving human-input information from a human user and an output device for presenting information to the user, each said user having a user identity. A connection, such as Internet, links the controller computer with each of the participator computers. Controller software runs on the controller computer to arbitrate in accordance with predefined rules including said user identity, which ones of the participator computers can interact in one of a plurality of groups through the controller computer and to distribute real time data to the respective ones of the groups. Participator software runs on each of the participator computers to handle a user interface permitting one said user to send a multimedia information message to the controller computer, which arbitrates which of the participator computers receive the multimedia information message and conveys the multimedia information message to the selected participator computers to present the multimedia information to the respective user.~~

A system and method communicating via an Internet network, the system including: a plurality of computers connected to a computer system such that one of the plurality of computers, corresponding to a first of the user identities, and an other of the plurality of computers, corresponding to a second of the user identities, can send communications, and some of the communications are received in real time via the Internet. There can be a determination as to whether some of the communications are allowed.

Petitioner Microsoft Corporation, Ex. 1002, p. 3436

Document code: WFEE

United States Patent and Trademark Office
Sales Receipt for Accounting Date: 12/01/2006

PSTANBAC	SALE	#00000003	Mailroom Dt:	11/17/2006	500235	09399578	
		01	FC : 2202	1,150.00	DA		
		02	FC : 2201	2,400.00	DA		

UNITED STATES PATENT AND TRADEMARK OFFICE

UNITED STATES DEPARTMENT OF COMMERCE
United States Patent and Trademark Office
Address: COMMISSIONER FOR PATENTS
P.O. Box 1450
Alexandria, Virginia 22313-1450
www.uspto.gov

APPLICATION NO.	FILING DATE	FIRST NAMED INVENTOR	ATTORNEY DOCKET NO.	CONFIRMATION NO.
09/399,578	09/20/1999	DANIEL L. MARKS	AIS-P99-1	2427

7590 10/17/2006

PETER K TRZYNA
P.O.BOX 7131
CHICAGO, IL 606807131

EXAMINER	
WINDER, PATRICE L	
ART UNIT	**PAPER NUMBER**
2145	

DATE MAILED: 10/17/2006

Please find below and/or attached an Office communication concerning this application or proceeding.

Notice of Non-Compliant Amendment (37 CFR 1.121)	Application No. 09/399,578	Applicant(s) MARKS, DANIEL L.	
	Examiner Patrice Winder	Art Unit 2145	

-- The MAILING DATE of this communication appears on the cover sheet with the correspondence address --

The amendment document filed on _____ is considered non-compliant because it has failed to meet the requirements of 37 CFR 1.121 or 1.4. In order for the amendment document to be compliant, correction of the following item(s) is required.

THE FOLLOWING MARKED (X) ITEM(S) CAUSE THE AMENDMENT DOCUMENT TO BE NON-COMPLIANT:

- ☐ 1. Amendments to the specification:
  - ☐ A. Amended paragraph(s) do not include markings.
  - ☐ B. New paragraph(s) should not be underlined.
  - ☐ C. Other _____.
- ☐ 2. Abstract:
  - ☐ A. Not presented on a separate sheet. 37 CFR 1.72.
  - ☐ B. Other _____.
- ☐ 3. Amendments to the drawings:
  - ☐ A. The drawings are not properly identified in the top margin as "Replacement Sheet," "New Sheet," or "Annotated Sheet" as required by 37 CFR 1.121(d).
  - ☐ B. The practice of submitting proposed drawing correction has been eliminated. Replacement drawings showing amended figures, without markings, in compliance with 37 CFR 1.84 are required.
  - ☐ C. Other _____.
- ☒ 4. Amendments to the claims:
  - ☐ A. A complete listing of all of the claims is not present.
  - ☐ B. The listing of claims does not include the text of all pending claims (including withdrawn claims)
  - ☒ C. Each claim has not been provided with the proper status identifier, and as such, the individual status of each claim cannot be identified. Note: the status of every claim must be indicated after its claim number by using one of the following status identifiers: (Original), (Currently amended), (Canceled), (Previously presented), (New), (Not entered), (Withdrawn) and (Withdrawn-currently amended).
  - ☐ D. The claims of this amendment paper have not been presented in ascending numerical order.
  - ☒ E. Other: *See Continuation Sheet*.
- ☐ 5. Other (e.g., the amendment is unsigned or not signed in accordance with 37 CFR 1.4):

_____

For further explanation of the amendment format required by 37 CFR 1.121, see MPEP § 714.

TIME PERIODS FOR FILING A REPLY TO THIS NOTICE:

1. Applicant is given **no new time period** if the non-compliant amendment is an after-final amendment or an amendment filed after allowance. If applicant wishes to resubmit the non-compliant after-final amendment with corrections, the **entire corrected amendment** must be resubmitted.

2. Applicant is given **one month**, or thirty (30) days, whichever is longer, from the mail date of this notice to supply the correction, if the non-compliant amendment is one of the following: a preliminary amendment, a non-final amendment (including a submission for a request for continued examination (RCE) under 37 CFR 1.114), a supplemental amendment filed within a suspension period under 37 CFR 1.103(a) or (c), and an amendment filed in response to a *Quayle* action. If any of above boxes 1. to 4. are checked, the correction required is only the **corrected section** of the non-compliant amendment in compliance with 37 CFR 1.121.

   Extensions of time are available under 37 CFR 1.136(a) only if the non-compliant amendment is a non-final amendment or an amendment filed in response to a *Quayle* action.

   Failure to timely respond to this notice will result in:
   Abandonment of the application if the non-compliant amendment is a non-final amendment or an amendment filed in response to a *Quayle* action; or
   Non-entry of the amendment if the non-compliant amendment is a preliminary amendment or supplemental amendment.

_____ _____

Legal Instruments Examiner (LIE), if applicable Telephone No.

Continuation of 4(e) Other: There are 2 supplemental submissions of claim indices. The status identifiers of some claims is not updated to reflect a later filed submission (some claims are new in all 3 submissions). The content of the claims reflects amendment but no amendments are provided in the claim index, see for example claim 973.

Patrice L. Winder

PATRICE WINDER
PRIMARY EXAMINER

UNITED STATES PATENT AND TRADEMARK OFFICE

UNITED STATES DEPARTMENT OF COMMERCE
United States Patent and Trademark Office
Address: COMMISSIONER FOR PATENTS
P.O. Box 1450
Alexandria, Virginia 22313-1450
www.uspto.gov

APPLICATION NO.	FILING DATE	FIRST NAMED INVENTOR	ATTORNEY DOCKET NO.	CONFIRMATION NO.
09/399,578	09/20/1999	DANIEL L. MARKS	AIS-P99-1	2427

7590 04/08/2004

PETER K TRZYNA
P.O.BOX 7131
CHICAGO, IL 606807131

EXAMINER	
WINDER, PATRICE L	
ART UNIT	**PAPER NUMBER**
2155	35

DATE MAILED: 04/08/2004

Please find below and/or attached an Office communication concerning this application or proceeding.

PTO-90C (Rev. 10/03)

Copied from 11510463 on 02/07/2007

Office Action Summary	Application No.	Applicant(s)	
	09/399,578	MARKS, DANIEL L.	
	Examiner	Art Unit	
	Patrice Winder	2155	

-- The MAILING DATE of this communication appears on the cover sheet with the correspondence address --

Period for Reply

A SHORTENED STATUTORY PERIOD FOR REPLY IS SET TO EXPIRE ____ MONTH(S) FROM THE MAILING DATE OF THIS COMMUNICATION.

- Extensions of time may be available under the provisions of 37 CFR 1.136(a). In no event, however, may a reply be timely filed after SIX (6) MONTHS from the mailing date of this communication.
- If the period for reply specified above is less than thirty (30) days, a reply within the statutory minimum of thirty (30) days will be considered timely.
- If NO period for reply is specified above, the maximum statutory period will apply and will expire SIX (6) MONTHS from the mailing date of this communication.
- Failure to reply within the set or extended period for reply will, by statute, cause the application to become ABANDONED (35 U.S.C. § 133). Any reply received by the Office later than three months after the mailing date of this communication, even if timely filed, may reduce any earned patent term adjustment. See 37 CFR 1.704(b).

Status

1)☒ Responsive to communication(s) filed on *03 October 2003*.

2a)☒ This action is **FINAL**. 2b)☐ This action is non-final.

3)☐ Since this application is in condition for allowance except for formal matters, prosecution as to the merits is closed in accordance with the practice under *Ex parte Quayle*, 1935 C.D. 11, 453 O.G. 213.

Disposition of Claims

4)☒ Claim(s) *1-949* is/are pending in the application.

4a) Of the above claim(s) _____ is/are withdrawn from consideration.

5)☐ Claim(s) _____ is/are allowed.

6)☒ Claim(s) *1-949* is/are rejected.

7)☐ Claim(s) _____ is/are objected to.

8)☐ Claim(s) _____ are subject to restriction and/or election requirement.

Application Papers

9)☐ The specification is objected to by the Examiner.

10)☐ The drawing(s) filed on _____ is/are: a)☐ accepted or b)☐ objected to by the Examiner.

Applicant may not request that any objection to the drawing(s) be held in abeyance. See 37 CFR 1.85(a).

Replacement drawing sheet(s) including the correction is required if the drawing(s) is objected to. See 37 CFR 1.121(d).

11)☐ The oath or declaration is objected to by the Examiner. Note the attached Office Action or form PTO-152.

Priority under 35 U.S.C. § 119

12)☐ Acknowledgment is made of a claim for foreign priority under 35 U.S.C. § 119(a)-(d) or (f).

a)☐ All b)☐ Some * c)☐ None of:

1.☐ Certified copies of the priority documents have been received.

2.☐ Certified copies of the priority documents have been received in Application No. _____.

3.☐ Copies of the certified copies of the priority documents have been received in this National Stage application from the International Bureau (PCT Rule 17.2(a)).

* See the attached detailed Office action for a list of the certified copies not received.

Attachment(s)

1) ☒ Notice of References Cited (PTO-892)
2) ☐ Notice of Draftsperson's Patent Drawing Review (PTO-948)
3) ☐ Information Disclosure Statement(s) (PTO-1449 or PTO/SB/08) Paper No(s)/Mail Date _____.
4) ☐ Interview Summary (PTO-413) Paper No(s)/Mail Date. _____ .
5) ☐ Notice of Informal Patent Application (PTO-152)
6) ☐ Other: _____.

Copied from 11510463 on 02/07/2007
Petitioner Microsoft Corporation, Ex. 1002, p. 3442

DETAILED ACTION

Claim Rejections - 35 USC § 102

1. The following is a quotation of the appropriate paragraphs of 35 U.S.C. 102 that form the basis for the rejections under this section made in this Office action:

> A person shall be entitled to a patent unless –
>
> (e) the invention was described in (1) an application for patent, published under section 122(b), by another filed in the United States before the invention by the applicant for patent or (2) a patent granted on an application for patent by another filed in the United States before the invention by the applicant for patent, except that an international application filed under the treaty defined in section 351(a) shall have the effects for purposes of this subsection of an application filed in the United States only if the international application designated the United States and was published under Article 21(2) of such treaty in the English language.

2. Claims 1-949 are rejected under 35 U.S.C. 102(e) as being anticipated by Curtis et al., USPN 6,560,707 B2 (hereafter referred to as Curtis).

Regarding claim, Curtis taught a method of using computers to communicate over an Internet network, the method including the steps of:

connecting a plurality of participator computers with a controller computer through the Internet network (column 5, lines 35-37, column 6, lines 1-3), each of said participator computer connected to an input device and to an output device (column 5, lines 49-52);

arbitrating with the controller computer, in accordance with predefined rules including a for an authenticated user identity, to determine which ones of the participator computers can form a group to send and receive communication (column 5, lines 53-60, column 8, lines 40-58); and

sending and receiving communications in real time over the Internet network between said participator computers in said group, some of said communications including a respective video, a graphic or a point-triggered message (column 5, lines 33-34).

Copied from 11510463 on 02/07/2007

Regarding dependent claims:

Curtis taught a point triggered message, a human communication sound, a graphic, a video and text or ascii (column 5, lines 33-34, column 6, lines 40-42, column 6, line 55-67).

Curtis taught the step of arbitrating with the controller computer to determine which of the participator computer can communicate a human communication sound, a graphic, a video and text or ascii (column 8, lines 40-58).

Curtis taught the step of arbitrating including authorizing a moderator for said communications (column 8, lines 40-58).

Curtis taught the step of arbitrating including censoring responsive to at least one of said user identity, group and content (column 8, lines 40-58).

Claims 1-949 are rejected on the rationale set forth, above.

Conclusion

3. Applicant's amendment necessitated the new ground(s) of rejection presented in this Office action. Accordingly, **THIS ACTION IS MADE FINAL.** See MPEP § 706.07(a). Applicant is reminded of the extension of time policy as set forth in 37 CFR 1.136(a).

A shortened statutory period for reply to this final action is set to expire THREE MONTHS from the mailing date of this action. In the event a first reply is filed within TWO MONTHS of the mailing date of this final action and the advisory action is not mailed until after the end of the THREE-MONTH shortened statutory period, then the shortened statutory period will expire on the date the advisory action is mailed, and any

Copied from 11510463 on 02/07/2007

extension fee pursuant to 37 CFR 1.136(a) will be calculated from the mailing date of the advisory action. In no event, however, will the statutory period for reply expire later than SIX MONTHS from the date of this final action.

4. Any inquiry concerning this communication or earlier communications from the examiner should be directed to Patrice Winder whose telephone number is 703-305-3938. The examiner can normally be reached on Monday-Friday, 10:30 am-7:00 pm.

If attempts to reach the examiner by telephone are unsuccessful, the examiner's supervisor, Hosain Alam can be reached on 703-308-3662. The fax phone number for the organization where this application or proceeding is assigned is 703-872-9306.

Information regarding the status of an application may be obtained from the Patent Application Information Retrieval (PAIR) system. Status information for published applications may be obtained from either Private PAIR or Public PAIR. Status information for unpublished applications is available through Private PAIR only. For more information about the PAIR system, see http://pair-direct.uspto.gov. Should you have questions on access to the Private PAIR system, contact the Electronic Business Center (EBC) at 866-217-9197 (toll-free).

Patrice Winder
Primary Examiner
Art Unit 2155

plw

Copied from 11510463 on 02/07/2007

RECEIVED
CENTRAL FAX CENTER

JUL 14 2006

I, Peter K. Trzyna (Reg. No. 32, 601), hereby certify that this paper or fee is being filed via facsimile on the date indicated below and is addressed to MS: Status Request, Commissioner of Patents, P.O. Box 1450, Alexandria, VA 22313-1450, on the date set forth below:

Date: July 14, 2006

Signed: _____
Peter K. Trzyna (32,601)

PATENT

Paper No.

Our File No. AIS-P99-1

IN THE UNITED STATES PATENT AND TRADEMARK OFFICE

Inventor	:	Daniel L. Marks
Serial No.	:	09/399,578
Filed	:	September 20, 1999
For	:	REAL TIME COMMUNICATION SYSTEM
Group Art Unit	:	2155
Examiner	:	P. Winder

Status Request
Commissioner of Patents
P.O. Box 1450
Alexandria, VA 22313-1450

STATUS REQUEST

S I R :

The undersigned attorney, and attorney of record for the above-captioned application, respectfully requests that he be advised of the present status of the above-captioned application.

The Commissioner is reminded that all correspondence in the above-referenced matter should be sent to the address given below.

Respectfully submitted,

Date: July 14, 2006

Peter K. Trzyna
(Reg. No. 32,601)

P. O. Box 7131
Chicago, Illinois 60680-7131
(312) 240-0824

PAGE 4/4 * RCVD AT 7/14/2006 12:59:52 PM [Eastern Daylight Time] * SVR:USPTO-EFXRF-5/22 * DNIS:2738300 * CSID:312 240 0825 * DURATION (mm-ss):01-12

RECEIVED
CENTRAL FAX CENTER

JUL 14 2006

I, Peter K. Trzyna (Reg. No. 32, 601), hereby certify that this paper or fee is being filed via facsimile on the date indicated below and is addressed to MS: Status Request, Commissioner of Patents, P.O. Box 1450, Alexandria, VA 22313-1450, on the date set forth below:

Date: July 14, 2006

Signed: _____
Peter K. Trzyna (32,601)

PATENT

Paper No.

Our File No. AIS-P99-1

IN THE UNITED STATES PATENT AND TRADEMARK OFFICE

Inventor	:	Daniel L. Marks
Serial No.	:	09/399,578
Filed	:	September 20, 1999
For	:	REAL TIME COMMUNICATION SYSTEM
Group Art Unit	:	2155
Examiner	:	P. Winder

Honorable Commissioner of Patents
P.O. Box 1450
Alexandria, VA 22313-1450

TRANSMITTAL LETTER

S I R :

Transmitted herewith for filing in the above-identified patent application is the following:

1. Status Request.

APPLICANT CLAIMS LARGE ENTITY STATUS. The Commissioner is hereby authorized to charge any fees associated with the above-identified patent application or credit any overcharges to Deposit Account No. 50-0235.

Please direct all correspondence to the undersigned at the address given below.

Respectfully submitted,

Date: July 14, 2006

Peter K. Trzyna
(Reg. No. 32,601)

P.O. Box 7131
Chicago, IL 60680-7131
(312) 240-0824

PAGE 3/4 * RCVD AT 7/14/2006 12:59:52 PM [Eastern Daylight Time] * SVR:USPTO-EFXRF-5/22 * DNIS:2738300 * CSID:312 240 0825 * DURATION (mm-ss):01-12

Petitioner Microsoft Corporation, Ex. 1002, p. 3448

RECEIVED
CENTRAL FAX CENTER
JUL 14 2006

Regular Correspondence:
195 North Harbor Drive, Suite 5403, Chicago Illinois 60601-7540

Docketed Correspondence:
Post Office Box 7131, Chicago Illinois 60680-7131

Peter K. Trzyna, Esq.

Telephone: (312) 240-0824 Facsimile: (312) 240-0825

E-mail: pktlaw@email.msn.com

Fax

To: Examiner Patrice Winder	**Re:** 09/399,578 Status Request
Firm: United States Patent and Trademark Office	**Date / Time:** July 14, 2006
Street Address:	**Phone:** (571) 272-3935
City, State Zip: Washington, D.C., 20231	**Fax:** (571) 273-8300
cc:	**No. of Pages:** 3 (including cover)

PRIVACY AND CONFIDENTIALITY NOTICE

The information contained in this communication is confidential and may be legally privileged. It is intended solely for the use of the individual or entity to whom it is addressed and other authorized to receive it. If you are not the intended recipient, you are hereby notified that any disclosure, copying, distribution or taking of any action in reliance on the contents of this information is strictly prohibited. If you received this communication in error, please immediately notify us by a collect telephone call to the writer at the writer's direct number indicated above, and return the original message and documents to the sender at the above address via the United States postal service.

Message:

PAGE 1/4 * RCVD AT 7/14/2006 12:59:52 PM [Eastern Daylight Time] * SVR:USPTO-EFXRF-5/22 * DNIS:2738300 * CSID:312 240 0825 * DURATION (mm-ss):01-12

UNITED STATES PATENT AND TRADEMARK OFFICE

UNITED STATES DEPARTMENT OF COMMERCE
United States Patent and Trademark Office
Address: COMMISSIONER FOR PATENTS
P.O. Box 1450
Alexandria, Virginia 22313-1450
www.uspto.gov

APPLICATION NO.	FILING DATE	FIRST NAMED INVENTOR	ATTORNEY DOCKET NO.	CONFIRMATION NO.
09/399,578	09/20/1999	DANIEL L. MARKS	AIS-P99-1	2427

7590 01/12/2006

PETER K TRZYNA
P.O.BOX 7131
CHICAGO, IL 606807131

EXAMINER	
WINDER, PATRICE L	
ART UNIT	PAPER NUMBER
2145	

DATE MAILED: 01/12/2006

Please find below and/or attached an Office communication concerning this application or proceeding.

Suspension of Action

1. A reference relevant to the examination of this application may soon become available. *Ex parte* prosecution is SUSPENDED FOR A PERIOD OF 6 MONTHS from the date of this letter. Upon expiration of the period of suspension, applicant should make an inquiry as to the status of the application.

2. Any inquiry concerning this communication or earlier communications from the examiner should be directed to Patrice Winder whose telephone number is 571-272-3935. The examiner can normally be reached on Monday-Friday, 10:30 am-7:00 pm.

If attempts to reach the examiner by telephone are unsuccessful, the examiner's supervisor, Jason Cardone can be reached on 571-272-3933. The fax phone number for the organization where this application or proceeding is assigned is 571-273-8300.

Information regarding the status of an application may be obtained from the Patent Application Information Retrieval (PAIR) system. Status information for published applications may be obtained from either Private PAIR or Public PAIR. Status information for unpublished applications is available through Private PAIR only. For more information about the PAIR system, see http://pair-direct.uspto.gov. Should you have questions on access to the Private PAIR system, contact the Electronic Business Center (EBC) at 866-217-9197 (toll-free).

Patrice Winder
Primary Examiner
Art Unit 2145

January 8, 2006

OIPE IAP2 OCT 24 2005 PATENT & TRADEMARK OFFICE

"Express Mail" mailing label number ED975186966US
I, Peter K. Trzyna (Reg. No. 32, 601), hereby certify that this paper or fee is being deposited with the United States Postal Service "Express Mail Post Office to Addressee" service under 37 CFR 1.10 on the date indicated below and is addressed to MS: Fee Amendment, Commissioner of Patents, P.O. Box 1450, Alexandria, VA 22313-1450, on the date set forth below:

Date: October 24, 2005

Signed: _____
Peter K. Trzyna (32,601)

PATENT

Paper No.

Our File No. AIS-P99-1

IN THE UNITED STATES PATENT AND TRADEMARK OFFICE

Inventor	:	MARKS, Daniel L.
Serial No.	:	09/399,578
Filed	:	09/20/1999
For	:	REAL TIME COMMUNICATION SYSTEM
Group Art Unit	:	2145
Examiner	:	WINDER, Patrice L.

Honorable Commissioner of Patents
P.O. Box 1450
Alexandria, VA 22313-1450

FURTHER SUPPLEMENTAL AMENDMENT

S I R :

In the above-referenced patent application, please enter the following amendment and reconsider the application. It is believed that no new matter has been added.

I. Claims

Please amend the claims as follows:

1. (previously amended) A method of communicating via an Internet network, the method including:

connecting a plurality of computers to a computer system, each of the plurality of computers connected to a respective input device and to a respective output device;

sending, from each of the plurality of computers, a respective login name and a password corresponding to a respective user identity;

determining whether a first of the user identities and a second of the user identities are able to form a group for sending and for receiving communications in real time;

determining whether at least one of the first user identity and the second user identity, individually, is censored from data representing at least one of a pointer, video, audio, a graphic, or multimedia; and

if the first and the second user identities are able to form the group, forming the group for sending the communications, and receiving the communications that are not censored based on the individual user identity, wherein the receiving is in real time and via the Internet network, and not presenting the data that is censored to the corresponding output device.

2. (presently amended) The method of claim 1, wherein the determining whether at least one of the first user identity and the second user identity, individually, is censored from data includes determining whether at least one of the first user identity and the second user identity, individually, is censored from data representing ~~represents~~ a pointer.

3. (presently amended) The method of claim 1, determining whether at least one of the first user identity and the second user identity, individually, is censored from data includes determining whether at least one of the first user identity and the second user

Petitioner Microsoft Corporation, Ex. 1002, p. 3453

identity, individually, is censored from data representing ~~represents a~~ video.

4. (presently amended) The method of claim 1, determining whether at least one of the first user identity and the second user identity, individually, is censored from data includes determining whether at least one of the first user identity and the second user identity, individually, is censored from data representing ~~represents~~ audio.

5. (presently amended) The method of claim 1, determining whether at least one of the first user identity and the second user identity, individually, is censored from data includes determining whether at least one of the first user identity and the second user identity, individually, is censored from data representing ~~represents~~ a graphic.

6. (presently amended) The method of claim 1, determining whether at least one of the first user identity and the second user identity, individually, is censored from data includes determining whether at least one of the first user identity and the second user identity, individually, is censored from data representing ~~represents~~ multimedia.

7. (presently amended) The method of claim 1, determining whether at least one of the first user identity and the second user identity, individually, is censored from data includes determining whether at least one of the first user identity and the second user identity, individually, is censored from data representing ~~represents~~ a pointer and a video.

8. (presently amended) The method of claim 1, determining whether at least one of the first user identity and the second user identity, individually, is censored from data includes determining whether at least one of the first user identity and the second user identity, individually, is censored from data representing ~~represents~~ a pointer and audio.

Petitioner Microsoft Corporation, Ex. 1002, p. 3454

9. (presently amended) The method of claim 1, determining whether at least one of the first user identity and the second user identity, individually, is censored from data includes determining whether at least one of the first user identity and the second user identity, individually, is censored from data representing ~~represents~~ a pointer and a graphic.

10. (presently amended) The method of claim 1, determining whether at least one of the first user identity and the second user identity, individually, is censored from data includes determining whether at least one of the first user identity and the second user identity, individually, is censored from data representing ~~represents a~~ video and audio.

11. (presently amended) The method of claim 1, determining whether at least one of the first user identity and the second user identity, individually, is censored from data includes determining whether at least one of the first user identity and the second user identity, individually, is censored from data representing ~~represents a~~ video and a graphic.

12. (presently amended) The method of claim 1, determining whether at least one of the first user identity and the second user identity, individually, is censored from data includes determining whether at least one of the first user identity and the second user identity, individually, is censored from data representing ~~represents~~ audio and a graphic.

13. (presently amended) The method of claim 1, determining whether at least one of the first user identity and the second user identity, individually, is censored from data includes determining whether at least one of the first user identity and the second user identity, individually, is censored from data representing ~~represents~~ a pointer and a video and audio.

Petitioner Microsoft Corporation, Ex. 1002, p. 3455

14. (presently amended) The method of claim 1, determining whether at least one of the first user identity and the second user identity, individually, is censored from data includes determining whether at least one of the first user identity and the second user identity, individually, is censored from data representing ~~represents~~ a pointer and a video and a graphic.

15. (presently amended) The method of claim 1, determining whether at least one of the first user identity and the second user identity, individually, is censored from data includes determining whether at least one of the first user identity and the second user identity, individually, is censored from data representing ~~represents~~ a pointer and audio and a graphic.

16. (presently amended) The method of claim 1, determining whether at least one of the first user identity and the second user identity, individually, is censored from data includes determining whether at least one of the first user identity and the second user identity, individually, is censored from data representing ~~represents~~ a video and audio and a graphic.

17. (presently amended) The method of claim 1, determining whether at least one of the first user identity and the second user identity, individually, is censored from data includes determining whether at least one of the first user identity and the second user identity, individually, is censored from data representing ~~represents~~ a pointer and a video and audio and a graphic.

18. (previously amended) The method of claim 1, wherein at least some of the communications include at least one of text or ascii.

Petitioner Microsoft Corporation, Ex. 1002, p. 3456

19. (previously amended) The method of claim 2, wherein at least some of the communications include at least one of text or ascii.

20. (previously amended) The method of claim 3, wherein at least some of the communications include at least one of text or ascii.

21. (previously amended) The method of claim 4, wherein at least some of the communications include at least one of text or ascii.

22. (previously amended) The method of claim 5, wherein at least some of the communications include at least one of text or ascii.

23. (previously amended) The method of claim 6, wherein at least some of the communications include at least one of text or ascii.

24. (previously amended) The method of claim 7, wherein at least some of the communications include at least one of text or ascii.

25. (previously amended) The method of claim 8, wherein at least some of the communications include at least one of text or ascii.

26. (previously amended) The method of claim 9, wherein at least some of the communications include at least one of text or ascii.

27. (previously amended) The method of claim 10, wherein at least some of

Petitioner Microsoft Corporation, Ex. 1002, p. 3457

the communications include at least one of text or ascii.

28. (previously amended) The method of claim 11, wherein at least some of the communications include at least one of text or ascii.

29. (previously amended) The method of claim 12, wherein at least some of the communications include at least one of text or ascii.

30. (previously amended) The method of claim 13, wherein at least some of the communications include at least one of text or ascii.

31. (previously amended) The method of claim 14, wherein at least some of the communications include at least one of text or ascii.

32. (previously amended) The method of claim 15, wherein at least some of the communications include at least one of text or ascii.

33. (previously amended) The method of claim 16, wherein at least some of the communications include at least one of text or ascii.

34. (previously amended) The method of claim 17, wherein at least some of the communications include at least one of text or ascii.

35. (presently amended) The method of claim 1, further including:

determining whether at least one of the first and the second user identities, individually, is censored from sending in the communications data representing at least one of a pointer,

Petitioner Microsoft Corporation, Ex. 1002, p. 3458

video, audio, a graphic, or multimedia; and

sending the data that is not censored from sending.

36. (presently amended) The method of claim 2, further including:

determining whether at least one of the first and the second user identities, individually, is censored from sending in the communications data representing at least one of a pointer, video, audio, a graphic, or multimedia; and

sending the data that is not censored from sending.

37. (presently amended) The method of claim 3, further including:

determining whether at least one of the first and the second user identities, individually, is censored from sending in the communications data representing at least one of a pointer, video, audio, a graphic, or multimedia; and

sending the data that is not censored from sending.

38. (presently amended) The method of claim 4, further including:

determining whether at least one of the first and the second user identities, individually, is censored from sending in the communications data representing at least one of a pointer, video, audio, a graphic, or multimedia; and

sending the data that is not censored from sending.

39. (presently amended) The method of claim 5, further including:

determining whether at least one of the first and the second user identities, individually, is censored from sending in the communications data representing at least one of a pointer, video, audio, a graphic, or multimedia; and

sending the data that is not censored from sending.

Petitioner Microsoft Corporation, Ex. 1002, p. 3459

40. (presently amended) The method of claim 6, further including:

determining whether at least one of the first and the second user identities, individually, is censored from sending in the communications data representing at least one of a pointer, video, audio, a graphic, or multimedia; and

sending the data that is not censored from sending.

41. (presently amended) The method of claim 7, further including:

determining whether at least one of the first and the second user identities, individually, is censored from sending in the communications data representing at least one of a pointer, video, audio, a graphic, or multimedia; and

sending the data that is not censored from sending.

42. (presently amended) The method of claim 8, further including:

determining whether at least one of the first and the second user identities, individually, is censored from sending in the communications data representing at least one of a pointer, video, audio, a graphic, or multimedia; and

sending the data that is not censored from sending.

43. (presently amended) The method of claim 9, further including:

determining whether at least one of the first and the second user identities, individually, is censored from sending in the communications data representing at least one of a pointer, video, audio, a graphic, or multimedia; and

sending the data that is not censored from sending.

44. (presently amended) The method of claim 10, further including:

Petitioner Microsoft Corporation, Ex. 1002, p. 3460

determining whether at least one of the first and the second user identities, individually, is censored from sending in the communications data representing at least one of a pointer, video, audio, a graphic, or multimedia; and

sending the data that is not censored from sending.

45. (presently amended) The method of claim 11, further including:

determining whether at least one of the first and the second user identities, individually, is censored from sending in the communications data representing at least one of a pointer, video, audio, a graphic, or multimedia; and

sending the data that is not censored from sending.

46. (presently amended) The method of claim 12, further including:

determining whether at least one of the first and the second user identities, individually, is censored from sending in the communications data representing at least one of a pointer, video, audio, a graphic, or multimedia; and

sending the data that is not censored from sending.

47. (presently amended) The method of claim 13, further including:

determining whether at least one of the first and the second user identities, individually, is censored from sending in the communications data representing at least one of a pointer, video, audio, a graphic, or multimedia; and

sending the data that is not censored from sending.

48. (presently amended) The method of claim 14, further including:

determining whether at least one of the first and the second user identities, individually, is censored from sending in the communications data representing at least one of a

Petitioner Microsoft Corporation, Ex. 1002, p. 3461

pointer, video, audio, a graphic, or multimedia; and

sending the data that is not censored from sending.

49. (presently amended) The method of claim 15, further including:

determining whether at least one of the first and the second user identities, individually, is censored from sending in the communications data representing at least one of a pointer, video, audio, a graphic, or multimedia; and

sending the data that is not censored from sending.

50. (presently amended) The method of claim 16, further including:

determining whether at least one of the first and the second user identities, individually, is censored from sending in the communications data representing at least one of a pointer, video, audio, a graphic, or multimedia; and

sending the data that is not censored from sending.

51. (presently amended) The method of claim 17, further including:

determining whether at least one of the first and the second user identities, individually, is censored from sending in the communications data representing at least one of a pointer, video, audio, a graphic, or multimedia; and

sending the data that is not censored from sending.

52. (presently amended) The method of claim 1, further including determining whether at least one of the communications ~~are~~ is censored based on content.

53. (previously amended) The method of claim 2, further including determining whether at least one of the communications is censored based on content.

Petitioner Microsoft Corporation, Ex. 1002, p. 3462

54. (previously amended) The method of claim 3, further including determining whether at least one of the communications is censored based on content.

55. (previously amended) The method of claim 4, further including determining whether at least one of the communications is censored based on content.

56. (previously amended) The method of claim 5, further including determining whether at least one of the communications is censored based on content.

57. (previously amended) The method of claim 6, further including determining whether at least one of the communications is censored based on content.

58. (previously amended) The method of claim 7, further including determining whether at least one of the communications is censored based on content.

59. (previously amended) The method of claim 8, further including determining whether at least one of the communications is censored based on content.

60. (previously amended) The method of claim 9, further including determining whether at least one of the communications is censored based on content.

61. (previously amended) The method of claim 10, further including determining whether at least one of the communications is censored based on content.

62. (previously amended) The method of claim 11, further including

Petitioner Microsoft Corporation, Ex. 1002, p. 3463

determining whether at least one of the communications is censored based on content.

63. (previously amended) The method of claim 12, further including determining whether at least one of the communications is censored based on content.

64. (previously amended) The method of claim 13, further including determining whether at least one of the communications is censored based on content.

65. (previously amended) The method of claim 14, further including determining whether at least one of the communications is censored based on content.

66. (previously amended) The method of claim 15, further including determining whether at least one of the communications is censored based on content.

67. (previously amended) The method of claim 16, further including determining whether at least one of the communications is censored based on content.

68. (previously amended) The method of claim 17, further including determining whether at least one of the communications is censored based on content.

69. (previously amended) The method of claim 52, further including determining a user age corresponding to each of the user identities.

70. (previously amended) The method of claim 53, further including determining a user age corresponding to each of the user identities.

Petitioner Microsoft Corporation, Ex. 1002, p. 3464

71. (previously amended) The method of claim 54, further including determining a user age corresponding to each of the user identities.

72. (previously amended) The method of claim 55, further including determining a user age corresponding to each of the user identities.

73. (previously amended) The method of claim 56, further including determining a user age corresponding to each of the user identities.

74. (previously amended) The method of claim 57, further including determining a user age corresponding to each of the user identities.

75. (presently amended) The method of claim ~~58, further including determining a user age corresponding to each of the user identities~~ 1, wherein the determining whether at least one of the first user identity and the second user identity, individually, is censored from data includes determining whether a parameter corresponding to the first user identity has been determined by an other of the user identities.

76. (presently amended) The method of claim ~~59, further including determining a user age corresponding to each of the user identities~~ 2, wherein the determining whether at least one of the first user identity and the second user identity, individually, is censored from data includes determining whether a parameter corresponding to the first user identity has been determined by an other of the user identities.

77. (presently amended) The method of claim ~~60, further including determining a user age corresponding to each of the user identities~~ 3, wherein the determining

Petitioner Microsoft Corporation, Ex. 1002, p. 3465

whether at least one of the first user identity and the second user identity, individually, is censored from data includes determining whether a parameter corresponding to the first user identity has been determined by an other of the user identities.

78. (presently amended) The method of claim ~~61, further including determining a user age corresponding to each of the user identities~~ 4, wherein the determining whether at least one of the first user identity and the second user identity, individually, is censored from data includes determining whether a parameter corresponding to the first user identity has been determined by an other of the user identities.

79. (presently amended) The method of claim ~~62, further including determining a user age corresponding to each of the user identities~~ 5, wherein the determining whether at least one of the first user identity and the second user identity, individually, is censored from data includes determining whether a parameter corresponding to the first user identity has been determined by an other of the user identities.

80. (presently amended) The method of claim ~~63, further including determining a user age corresponding to each of the user identities~~ 6, wherein the determining whether at least one of the first user identity and the second user identity, individually, is censored from data includes determining whether a parameter corresponding to the first user identity has been determined by an other of the user identities.

81. (presently amended) The method of claim ~~64, further including determining a user age corresponding to each of the user identities~~ 7, wherein the determining whether at least one of the first user identity and the second user identity, individually, is censored from data includes determining whether a parameter corresponding to the first user

Petitioner Microsoft Corporation, Ex. 1002, p. 3466

identity has been determined by an other of the user identities.

82. (presently amended) The method of claim ~~65, further including determining a user age corresponding to each of the user identities~~ 8, wherein the determining whether at least one of the first user identity and the second user identity, individually, is censored from data includes determining whether a parameter corresponding to the first user identity has been determined by an other of the user identities.

83. (presently amended) The method of claim ~~66, further including determining a user age corresponding to each of the user identities~~ 9, wherein the determining whether at least one of the first user identity and the second user identity, individually, is censored from data includes determining whether a parameter corresponding to the first user identity has been determined by an other of the user identities.

84. (presently amended) The method of claim ~~67, further including determining a user age corresponding to each of the user identities~~ 10, wherein the determining whether at least one of the first user identity and the second user identity, individually, is censored from data includes determining whether a parameter corresponding to the first user identity has been determined by an other of the user identities.

85. (presently amended) The method of claim ~~68, further including determining a user age corresponding to each of the user identities~~ 11, wherein the determining whether at least one of the first user identity and the second user identity, individually, is censored from data includes determining whether a parameter corresponding to the first user identity has been determined by an other of the user identities.

Petitioner Microsoft Corporation, Ex. 1002, p. 3467

86. (previously amended) The method of claim 1, wherein the determining whether the first of the user identities and the second of the user identities are able to form a group includes determining whether the first of the user identities is censored.

87. (previously amended) The method of claim 2, wherein the determining whether the first of the user identities and the second of the user identities are able to form a group includes determining whether the first of the user identities is censored.

88. (previously amended) The method of claim 3, wherein the determining whether the first of the user identities and the second of the user identities are able to form a group includes determining whether the first of the user identities is censored.

89. (previously amended) The method of claim 4, wherein the determining whether the first of the user identities and the second of the user identities are able to form a group includes determining whether the first of the user identities is censored.

90. (previously amended) The method of claim 5, wherein the determining whether the first of the user identities and the second of the user identities are able to form a group includes determining whether the first of the user identities is censored.

91. (previously amended) The method of claim 6, wherein the determining whether the first of the user identities and the second of the user identities are able to form a group includes determining whether the first of the user identities is censored.

92. (previously amended) The method of claim 7, wherein the determining whether the first of the user identities and the second of the user identities are able to form a

Petitioner Microsoft Corporation, Ex. 1002, p. 3468

group includes determining whether the first of the user identities is censored.

93. (previously amended) The method of claim 8, wherein the determining whether the first of the user identities and the second of the user identities are able to form a group includes determining whether the first of the user identities is censored.

94. (previously amended) The method of claim 9, wherein the determining whether the first of the user identities and the second of the user identities are able to form a group includes determining whether the first of the user identities is censored.

95. (previously amended) The method of claim 10, wherein the determining whether the first of the user identities and the second of the user identities are able to form a group includes determining whether the first of the user identities is censored.

96. (previously amended) The method of claim 11, wherein the determining whether the first of the user identities and the second of the user identities are able to form a group includes determining whether the first of the user identities is censored.

97. (previously amended) The method of claim 12, wherein the determining whether the first of the user identities and the second of the user identities are able to form a group includes determining whether the first of the user identities is censored.

98. (previously amended) The method of claim 13, wherein the determining whether the first of the user identities and the second of the user identities are able to form a group includes determining whether the first of the user identities is censored.

Petitioner Microsoft Corporation, Ex. 1002, p. 3469

99. (previously amended) The method of claim 14, wherein the determining whether the first of the user identities and the second of the user identities are able to form a group includes determining whether the first of the user identities is censored.

100. (previously amended) The method of claim 15, wherein the determining whether the first of the user identities and the second of the user identities are able to form a group includes determining whether the first of the user identities is censored.

101. (previously amended) The method of claim 16, wherein the determining whether the first of the user identities and the second of the user identities are able to form a group includes determining whether the first of the user identities is censored.

102. (previously amended) The method of claim 17, wherein the determining whether the first of the user identities and the second of the user identities are able to form a group includes determining whether the first of the user identities is censored.

103. (previously amended) The method of claim 1, further including determining a user age corresponding to each of the user identities.

104. (previously amended) The method of claim 2, further including determining a user age corresponding to each of the user identities.

105. (previously amended) The method of claim 3, further including determining a user age corresponding to each of the user identities.

106. (previously amended) The method of claim 4, further including

Petitioner Microsoft Corporation, Ex. 1002, p. 3470

determining a user age corresponding to each of the user identities.

107. (previously amended) The method of claim 5, further including determining a user age corresponding to each of the user identities.

108. (previously amended) The method of claim 6, further including determining a user age corresponding to each of the user identities.

109. (previously amended) The method of claim 7, further including determining a user age corresponding to each of the user identities.

110. (previously amended) The method of claim 8, further including determining a user age corresponding to each of the user identities.

111. (previously amended) The method of claim 9, further including determining a user age corresponding to each of the user identities.

112. (previously amended) The method of claim 10, further including determining a user age corresponding to each of the user identities.

113. (previously amended) The method of claim 11, further including determining a user age corresponding to each of the user identities.

114. (previously amended) The method of claim 12, further including determining a user age corresponding to each of the user identities.

Petitioner Microsoft Corporation, Ex. 1002, p. 3471

115. (previously amended) The method of claim 13, further including determining a user age corresponding to each of the user identities.

116. (previously amended) The method of claim 14, further including determining a user age corresponding to each of the user identities.

117. (previously amended) The method of claim 15, further including determining a user age corresponding to each of the user identities.

118. (previously amended) The method of claim 16, further including determining a user age corresponding to each of the user identities.

119. (previously amended) The method of claim 17, further including determining a user age corresponding to each of the user identities.

120. (presently amended) The method of claim 1, wherein the data represents a pointer that ~~whereby the pointer~~ produces a pointer-triggered message on demand.

121. (presently amended) The method of claim 2, ~~whereby~~ wherein the pointer is a pointer that produces a pointer-triggered message on demand.

122. (presently amended) The method of claim 7, ~~whereby~~ wherein the pointer is a pointer that produces a pointer-triggered message on demand.

123. (presently amended) The method of claim 8, ~~whereby~~ wherein the pointer is a pointer that produces a pointer-triggered message on demand.

Petitioner Microsoft Corporation, Ex. 1002, p. 3472

124. (presently amended) The method of claim 9, ~~whereby~~ wherein the pointer is a pointer that produces a pointer-triggered message on demand.

125. (presently amended) The method of claim 13, ~~whereby~~ wherein the pointer is a pointer that produces a pointer-triggered message on demand.

126. (presently amended) The method of claim 14, ~~whereby~~ wherein the pointer is a pointer that produces a pointer-triggered message on demand.

127. (presently amended) The method of claim 15, ~~whereby~~ wherein the pointer is a pointer that produces a pointer-triggered message on demand.

128. (presently amended) The method of claim 17, ~~whereby~~ wherein the pointer is a pointer that produces a pointer-triggered message on demand.

129. (presently amended) The method of claim 18, wherein the data represents a pointer that ~~whereby the pointer~~ produces a pointer-triggered message on demand.

130. (presently amended) The method of claim 19, wherein the data represents a pointer that ~~whereby the pointer~~ produces a pointer-triggered message on demand.

131. (presently amended) The method of claim 24, ~~whereby~~ wherein the pointer is a pointer that produces a pointer-triggered message on demand.

Petitioner Microsoft Corporation, Ex. 1002, p. 3473

132. (presently amended) The method of claim 25, ~~whereby~~ wherein the pointer is a pointer that produces a pointer-triggered message on demand.

133. (presently amended) The method of claim 26, ~~whereby~~ wherein the pointer is a pointer that produces a pointer-triggered message on demand.

134. (presently amended) The method of claim 30, ~~whereby~~ wherein the pointer is a pointer that produces a pointer-triggered message on demand.

135. (presently amended) The method of claim 31, ~~whereby~~ wherein the pointer is a pointer that produces a pointer-triggered message on demand.

136. (presently amended) The method of claim 32, ~~whereby~~ wherein the pointer is a pointer that produces a pointer-triggered message on demand.

137. (presently amended) The method of claim 34, ~~whereby~~ wherein the pointer is a pointer that produces a pointer-triggered message on demand.

138. (presently amended) The method of claim 35, wherein the data that is censored from sending represents a pointer that ~~whereby the pointer~~ produces a pointer-triggered message on demand.

139. (presently amended) The method of claim 36, wherein the data that is censored from sending represents a pointer that ~~whereby the pointer~~ produces a pointer-triggered message on demand.

Petitioner Microsoft Corporation, Ex. 1002, p. 3474

140. (presently amended) The method of claim 41, ~~whereby~~ wherein the data that is censored from sending represents a the pointer that produces a pointer-triggered message on demand.

141. (presently amended) The method of claim 42, ~~whereby~~ wherein the data that is censored from sending represents a the pointer that produces a pointer-triggered message on demand.

142. (presently amended) The method of claim 43, ~~whereby~~ wherein the data that is censored from sending represents a the pointer that produces a pointer-triggered message on demand.

143. (presently amended) The method of claim 47, ~~whereby~~ wherein the data that is censored from sending represents a the pointer that produces a pointer-triggered message on demand.

144. (presently amended) The method of claim 48, ~~whereby~~ wherein the data that is censored from sending represents a the pointer that produces a pointer-triggered message on demand.

145. (presently amended) The method of claim 49, ~~whereby~~ wherein the data that is censored from sending represents a the pointer that produces a pointer-triggered message on demand.

146. (presently amended) The method of claim 51, ~~whereby~~ wherein the data

Petitioner Microsoft Corporation, Ex. 1002, p. 3475

that is censored from sending represents a the pointer that produces a pointer-triggered message on demand.

147. (presently amended) The method of claim 52, wherein the data represents a pointer that ~~whereby the pointer~~ produces a pointer-triggered message on demand.

148. (presently amended) The method of claim 53, wherein the data represents a pointer that ~~whereby the pointer~~ produces a pointer-triggered message on demand.

149. (presently amended) The method of claim 58, ~~whereby~~ wherein the pointer is a pointer that produces a pointer-triggered message on demand.

150. (presently amended) The method of claim 59, ~~whereby~~ wherein the pointer is a pointer that produces a pointer-triggered message on demand.

151. (presently amended) The method of claim 60, ~~whereby~~ wherein the pointer is a pointer that produces a pointer-triggered message on demand.

152. (presently amended) The method of claim 64, ~~whereby~~ wherein the pointer is a pointer that produces a pointer-triggered message on demand.

153. (presently amended) The method of claim 65, ~~whereby~~ wherein the pointer is a pointer that produces a pointer-triggered message on demand.

Petitioner Microsoft Corporation, Ex. 1002, p. 3476

154. (presently amended) The method of claim 66, ~~whereby~~ wherein the pointer is a pointer that produces a pointer-triggered message on demand.

155. (presently amended) The method of claim 68, ~~whereby~~ wherein the pointer is a pointer that produces a pointer-triggered message on demand.

156. (presently amended) The method of claim 69, wherein the data represents a pointer that ~~whereby the pointer~~ produces a pointer-triggered message on demand.

157. (presently amended) The method of claim 70, wherein the data represents a pointer that ~~whereby the pointer~~ produces a pointer-triggered message on demand.

158. (presently amended) The method of claim 75, wherein the data represents a pointer that ~~whereby the pointer~~ produces a pointer-triggered message on demand.

159. (presently amended) The method of claim 76, wherein the data represents a pointer that ~~whereby the pointer~~ produces a pointer-triggered message on demand.

160. (presently amended) The method of claim 77, wherein the data represents a pointer that ~~whereby the pointer~~ a pointer-triggered message on demand.

161. (presently amended) The method of claim 81, ~~whereby~~ wherein the pointer

Petitioner Microsoft Corporation, Ex. 1002, p. 3477

is a pointer that produces a pointer-triggered message on demand.

162. (presently amended) The method of claim 82, ~~whereby~~ wherein the pointer is a pointer that produces a pointer-triggered message on demand.

163. (presently amended) The method of claim 83, ~~whereby~~ wherein the pointer is a pointer that produces a pointer-triggered message on demand.

164. (presently amended) The method of claim 85, wherein the data represents a pointer that ~~whereby the pointer~~ produces a pointer-triggered message on demand.

165. (presently amended) A method of operating a system to receive a communication via an Internet network, the method including:

connecting a plurality of computers to a computer system;

sending, from each of the plurality of computers, a respective login name and a password corresponding to a respective user identity;

communicating a message comprised of a pointer, from a first of the plurality of computers to the computer system;

communicating the message from the computer system to a second of the plurality of computers; and

receiving via the pointer a communication from the first of the plurality of computers at the second of the plurality of computers, the communication being sent in real time and via the Internet network, the communication including data representing at least one of a video, a graphic, sound, or multimedia.

Petitioner Microsoft Corporation, Ex. 1002, p. 3478

166. (presently amended) The method of claim 86, wherein the data represents a pointer that ~~whereby the pointer~~ produces a pointer-triggered message on demand.

167. (presently amended) The method of claim 87, wherein the data represents a pointer that ~~whereby the pointer~~ produces a pointer-triggered message on demand.

168. (presently amended) The method of claim 92, ~~whereby~~ wherein the pointer is a pointer that produces a pointer-triggered message on demand.

169. (presently amended) The method of claim 93, ~~whereby~~ wherein the pointer is a pointer that produces a pointer-triggered message on demand.

170. (presently amended) A method of communicating via an Internet network, the method including:

connecting a plurality of computers to a computer system;

sending, from each of the plurality of computers, a respective login name and password corresponding to a respective user identity;

determining whether a first of the user identities and a second of the user identities are able to form a group for sending and for receiving communications in real time;

determining whether at least one of the first user identity and the second user identity, individually, is censored from sending data in the communications, the data representing at least one of a pointer, video, audio, a graphic, or multimedia; and

if the first and the second user identities are able to form the group, then forming the group, sending the communications that are not censored based on the individual user

Petitioner Microsoft Corporation, Ex. 1002, p. 3479

identity, and receiving the communications, wherein the receiving is in real time and via the Internet network.

171. (presently amended) The method of claim 94, ~~whereby~~ wherein the pointer is a pointer that produces a pointer-triggered message on demand.

172. (presently amended) The method of claim 98, ~~whereby~~ wherein the pointer is a pointer that produces a pointer-triggered message on demand.

173. (presently amended d) The method of claim 99, ~~whereby~~ wherein the pointer is a pointer that produces a pointer-triggered message on demand.

174. (presently amended) The method of claim 100, ~~whereby~~ wherein the pointer is a pointer that produces a pointer-triggered message on demand.

175. (presently amended) The method of claim 102, ~~whereby~~ wherein the pointer is a pointer that produces a pointer-triggered message on demand.

176. (presently amended) The method of claim 103, wherein the data represents a pointer that ~~whereby the pointer~~ produces a pointer-triggered message on demand.

177. (presently amended) The method of claim 104, wherein the data represents a pointer that ~~whereby the pointer~~ produces a pointer-triggered message on demand.

178. (presently amended) The method of claim 109, ~~whereby~~ wherein the pointer is a pointer that produces a pointer-triggered message on demand.

Petitioner Microsoft Corporation, Ex. 1002, p. 3480

179. (presently amended) The method of claim 110, ~~whereby~~ wherein the pointer is a pointer that produces a pointer-triggered message on demand.

180. (presently amended) The method of claim 111, ~~whereby~~ wherein the pointer is a pointer that produces a pointer-triggered message on demand.

181. (presently amended) The method of claim 115, ~~whereby~~ wherein the pointer is a pointer that produces a pointer-triggered message on demand.

182. (presently amended) The method of claim 116, ~~whereby~~ wherein the pointer is a pointer that produces a pointer-triggered message on demand.

183. (presently amended) The method of claim 117, ~~whereby~~ wherein the pointer is a pointer that produces a pointer-triggered message on demand.

184. (presently amended) The method of claim 119, ~~whereby~~ wherein the pointer is a pointer that produces a pointer-triggered message on demand.

185. (previously amended) The method of claim 1, wherein receiving the communications includes causing presentation of some of the communications by one of the plurality of computers in the group.

186. (previously amended) The method of claim 1, further including, when the data is censored, not receiving the communications that are censored based on the individual user identity, and not presenting the data that is censored to the corresponding output device.

Petitioner Microsoft Corporation, Ex. 1002, p. 3481

187. (previously amended) The method of claim 1, wherein the computer system is comprised of an Internet service provider computer system.

188. (presently amended) The method of claim 1, further including:

storing, for the first user identity, an authorization associated with presentation of graphical multimedia ~~data~~; and

based on the authorization, presenting the graphical multimedia ~~data~~ at the output device corresponding to the second user identity.

189. (previously amended) The method of claim 1, further including:

providing the first user identity with access to a member-associated image corresponding to the second user identity.

190. (previously amended) The method of claim 1, further including:

determining whether the first user identity is censored from access to a member-associated image corresponding to the second user identity;

if the first user identity is censored, not allowing access to the member-associated image; and

if the first user identity is not censored, allowing access to the member-associated image.

191. (presently amended) The method of claim 170, wherein the determining whether at least one of the first user identity and the second user identity, individually, is censored from sending data includes wherein the determining whether at least one of the first user identity and the second user identity, individually, is censored from sending data

Petitioner Microsoft Corporation, Ex. 1002, p. 3482

representing ~~represents~~ a pointer.

192. (presently amended) The method of claim 170, wherein the determining whether at least one of the first user identity and the second user identity, individually, is censored from sending data includes wherein the determining whether at least one of the first user identity and the second user identity, individually, is censored from sending data representing ~~represents a~~ video.

193. (presently amended) The method of claim 170, wherein the determining whether at least one of the first user identity and the second user identity, individually, is censored from sending data includes wherein the determining whether at least one of the first user identity and the second user identity, individually, is censored from sending data representing ~~represents~~ audio.

194. (presently amended) The method of claim 170, wherein the determining whether at least one of the first user identity and the second user identity, individually, is censored from sending data includes wherein the determining whether at least one of the first user identity and the second user identity, individually, is censored from sending data representing ~~represents~~ a graphic.

195. (presently amended) The method of claim 170, wherein the determining whether at least one of the first user identity and the second user identity, individually, is censored from sending data includes wherein the determining whether at least one of the first user identity and the second user identity, individually, is censored from sending data representing ~~represents~~ multimedia.

Petitioner Microsoft Corporation, Ex. 1002, p. 3483

196. (presently amended) The method of claim 170, wherein the determining whether at least one of the first user identity and the second user identity, individually, is censored from sending data includes wherein the determining whether at least one of the first user identity and the second user identity, individually, is censored from sending data representing ~~represents~~ a pointer and a video.

197. (presently amended) The method of claim 170, wherein the determining whether at least one of the first user identity and the second user identity, individually, is censored from sending data includes wherein the determining whether at least one of the first user identity and the second user identity, individually, is censored from sending data representing ~~represents~~ a ~~the~~ pointer and audio.

198. (presently amended) The method of claim 170, wherein the determining whether at least one of the first user identity and the second user identity, individually, is censored from sending data includes wherein the determining whether at least one of the first user identity and the second user identity, individually, is censored from sending data representing ~~represents~~ a pointer and a graphic.

199. (presently amended) The method of claim 170, wherein the determining whether at least one of the first user identity and the second user identity, individually, is censored from sending data includes wherein the determining whether at least one of the first user identity and the second user identity, individually, is censored from sending data representing ~~represents a~~ video and audio.

200. (presently amended) The method of claim 170, wherein the determining whether at least one of the first user identity and the second user identity, individually, is

Petitioner Microsoft Corporation, Ex. 1002, p. 3484

censored from sending data includes wherein the determining whether at least one of the first user identity and the second user identity, individually, is censored from sending data representing ~~represents a~~ video and a graphic.

201. (presently amended) The method of claim 170, wherein the determining whether at least one of the first user identity and the second user identity, individually, is censored from sending data includes wherein the determining whether at least one of the first user identity and the second user identity, individually, is censored from sending data representing ~~represents~~ audio and a graphic.

202. (presently amended) The method of claim 170, wherein the determining whether at least one of the first user identity and the second user identity, individually, is censored from sending data includes wherein the determining whether at least one of the first user identity and the second user identity, individually, is censored from sending data representing ~~represents~~ a pointer and a video and audio.

203. (presently amended) The method of claim 170, wherein the determining whether at least one of the first user identity and the second user identity, individually, is censored from sending data includes wherein the determining whether at least one of the first user identity and the second user identity, individually, is censored from sending data representing ~~represents~~ a pointer and a video and a graphic.

204. (presently amended) The method of claim 170, wherein the determining whether at least one of the first user identity and the second user identity, individually, is censored from sending data includes wherein the determining whether at least one of the first user identity and the second user identity, individually, is censored from sending data

Petitioner Microsoft Corporation, Ex. 1002, p. 3485

representing ~~represents~~ a pointer and audio and a graphic.

205. (presently amended) The method of claim 170, wherein the determining whether at least one of the first user identity and the second user identity, individually, is censored from sending data includes wherein the determining whether at least one of the first user identity and the second user identity, individually, is censored from sending data representing ~~represents a~~ video and audio and a graphic.

206. (presently amended) The method of claim 170, wherein the determining whether at least one of the first user identity and the second user identity, individually, is censored from sending data includes wherein the determining whether at least one of the first user identity and the second user identity, individually, is censored from sending data representing ~~represents~~ a pointer and a video and audio and a graphic.

207. (previously amended) The method of claim 170, wherein at least some of the communications include at least one of text or ascii.

208. (previously amended) The method of claim 191, wherein at least some of the communications include at least one of text or ascii.

209. (previously amended) The method of claim 192, wherein at least some of the communications include at least one of text or ascii.

210. (previously amended) The method of claim 193, wherein at least some of the communications include at least one of text or ascii.

Petitioner Microsoft Corporation, Ex. 1002, p. 3486

211. (previously amended) The method of claim 194, wherein at least some of the communications include at least one of text or ascii.

212. (previously amended) The method of claim 195, wherein at least some of the communications include at least one of text or ascii.

213. (previously amended) The method of claim 196, wherein at least some of the communications include at least one of text or ascii.

214. (previously amended) The method of claim 197, wherein at least some of the communications include at least one of text or ascii.

215. (previously amended) The method of claim 198, wherein at least some of the communications include at least one of text or ascii.

216. (previously amended) The method of claim 199, wherein at least some of the communications include at least one of text or ascii.

217. (previously amended) The method of claim 200, wherein at least some of the communications include at least one of text or ascii.

218. (previously amended) The method of claim 201, wherein at least some of the communications include at least one of text or ascii.

219. (previously amended) The method of claim 202, wherein at least some of the communications include at least one of text or ascii.

Petitioner Microsoft Corporation, Ex. 1002, p. 3487

220. (previously amended) The method of claim 203, wherein at least some of the communications include at least one of text or ascii.

221. (previously amended) The method of claim 204, wherein at least some of the communications include at least one of text or ascii.

222. (previously amended) The method of claim 205, wherein at least some of the communications include at least one of text or ascii.

223. (previously amended) The method of claim 206, wherein at least some of the communications include at least one of text or ascii.

224. (previously amended) The method of claim 170, further including determining whether at least one of the communications is censored based on content.

225. (previously amended) The method of claim 191, further including determining whether at least one of the communications is censored based on content.

226. (previously amended) The method of claim 192, further including determining whether at least one of the communications is censored based on content.

227. (previously amended) The method of claim 193, further including determining whether at least one of the communications is censored based on content.

228. (previously amended) The method of claim 194, further including

Petitioner Microsoft Corporation, Ex. 1002, p. 3488

determining whether at least one of the communications is censored based on content.

229. (previously amended) The method of claim 195, further including determining whether at least one of the communications is censored based on content.

230. (previously amended) The method of claim 196, further including determining whether at least one of the communications is censored based on content.

231. (previously amended) The method of claim 197, further including determining whether at least one of the communications is censored based on content.

232. (previously amended) The method of claim 198, further including determining whether at least one of the communications is censored based on content.

233. (previously amended) The method of claim 199, further including determining whether at least one of the communications is censored based on content.

234. (previously amended) The method of claim 200, further including determining whether at least one of the communications is censored based on content.

235. (previously amended) The method of claim 201, further including determining whether at least one of the communications is censored based on content.

236. (previously amended) The method of claim 202, further including determining whether at least one of the communications is censored based on content.

Petitioner Microsoft Corporation, Ex. 1002, p. 3489

237. (previously amended) The method of claim 203, further including determining whether at least one of the communications is censored based on content.

238. (previously amended) The method of claim 204, further including determining whether at least one of the communications is censored based on content.

239. (previously amended) The method of claim 205, further including determining whether at least one of the communications is censored based on content.

240. (previously amended) The method of claim 206, further including determining whether at least one of the communications is censored based on content.

241. (previously amended) The method of claim 170, wherein the determining whether the first user identity and the second user identity are able to form a group includes determining whether the first of the user identities is censored.

242. (previously amended) The method of claim 191, wherein the determining whether the first user identity and the second user identity are able to form a group includes determining whether the first of the user identities is censored.

243. (previously amended) The method of claim 192, wherein the determining whether the first user identity and the second user identity are able to form a group includes determining whether the first of the user identities is censored.

244. (previously amended) The method of claim 193, wherein the determining whether the first user identity and the second user identity are able to form a group includes

Petitioner Microsoft Corporation, Ex. 1002, p. 3490

determining whether the first of the user identities is censored.

245. (previously amended) The method of claim 194, wherein the determining whether the first user identity and the second user identity are able to form a group includes determining whether the first of the user identities is censored.

246. (previously amended) The method of claim 195, wherein the determining whether the first user identity and the second user identity are able to form a group includes determining whether the first of the user identities is censored.

247. (previously amended) The method of claim 196, wherein the determining whether the first user identity and the second user identity are able to form a group includes determining whether the first of the user identities is censored.

248. (previously amended) The method of claim 197, wherein the determining whether the first user identity and the second user identity are able to form a group includes determining whether the first of the user identities is censored.

249. (previously amended) The method of claim 198, wherein the determining whether the first user identity and the second user identity are able to form a group includes determining whether the first of the user identities is censored.

250. (previously amended) The method of claim 199, wherein the determining whether the first user identity and the second user identity are able to form a group includes determining whether the first of the user identities is censored.

Petitioner Microsoft Corporation, Ex. 1002, p. 3491

251. (previously amended) The method of claim 200, wherein the determining whether the first user identity and the second user identity are able to form a group includes determining whether the first of the user identities is censored.

252. (previously amended) The method of claim 201, wherein the determining whether the first user identity and the second user identity are able to form a group includes determining whether the first of the user identities is censored.

253. (previously amended) The method of claim 202, wherein the determining whether the first user identity and the second user identity are able to form a group includes determining whether the first of the user identities is censored.

254. (previously amended) The method of claim 203, wherein the determining whether the first user identity and the second user identity are able to form a group includes determining whether the first of the user identities is censored.

255. (previously amended) The method of claim 204, wherein the determining whether the first user identity and the second user identity are able to form a group includes determining whether the first of the user identities is censored.

256. (previously amended) The method of claim 205, wherein the determining whether the first user identity and the second user identity are able to form a group includes determining whether the first of the user identities is censored.

257. (previously amended) The method of claim 206, wherein the determining whether the first user identity and the second user identity are able to form a group includes

Petitioner Microsoft Corporation, Ex. 1002, p. 3492

determining whether the first of the user identities is censored.

258. (previously amended) The method of claim 170, further including determining a user age corresponding to each of the user identities.

259. (previously amended) The method of claim 191, further including determining a user age corresponding to each of the user identities.

260. (previously amended) The method of claim 192, further including determining a user age corresponding to each of the user identities.

261. (previously amended) The method of claim 193, further including determining a user age corresponding to each of the user identities.

262. (previously amended) The method of claim 194, further including determining a user age corresponding to each of the user identities.

263. (previously amended) The method of claim 195, further including determining a user age corresponding to each of the user identities.

264. (previously amended) The method of claim 196, further including determining a user age corresponding to each of the user identities.

265. (previously amended) The method of claim 197, further including determining a user age corresponding to each of the user identities.

Petitioner Microsoft Corporation, Ex. 1002, p. 3493

266. (previously amended) The method of claim 198, further including determining a user age corresponding to each of the user identities.

267. (previously amended) The method of claim 199, further including determining a user age corresponding to each of the user identities.

268. (previously amended) The method of claim 200, further including determining a user age corresponding to each of the user identities.

269. (previously amended) The method of claim 201, further including determining a user age corresponding to each of the user identities.

270. (previously amended) The method of claim 202, further including determining a user age corresponding to each of the user identities.

271. (previously amended) The method of claim 203, further including determining a user age corresponding to each of the user identities.

272. (previously amended) The method of claim 204, further including determining a user age corresponding to each of the user identities.

273. (previously amended) The method of claim 205, further including determining a user age corresponding to each of the user identities.

274. (previously amended) The method of claim 206, further including determining a user age corresponding to each of the user identities.

Petitioner Microsoft Corporation, Ex. 1002, p. 3494

275. (previously amended) The method of claim 170, wherein at least one of the communications includes data representing a human communication of sound.

276. (previously amended) The method of claim 191, wherein at least one of the communications includes data representing a human communication of sound.

277. (previously amended) The method of claim 192, wherein at least one of the communications includes data representing a human communication of sound.

278. (previously amended) The method of claim 193, wherein at least one of the communications includes data representing a human communication of sound.

279. (previously amended) The method of claim 194, wherein at least one of the communications includes data representing a human communication of sound.

280. (previously amended) The method of claim 195, wherein at least one of the communications includes data representing a human communication of sound.

281. (previously amended) The method of claim 196, wherein at least one of the communications includes data representing a human communication of sound.

282. (previously amended) The method of claim 197, wherein at least one of the communications includes data representing a human communication of sound.

283. (previously amended) The method of claim 198, wherein at least one of

Petitioner Microsoft Corporation, Ex. 1002, p. 3495

the communications includes data representing a human communication of sound.

284. (previously amended) The method of claim 199, wherein at least one of the communications includes data representing a human communication of sound.

285. (previously amended) The method of claim 200, wherein at least one of the communications includes data representing a human communication of sound.

286. (previously amended) The method of claim 201, wherein at least one of the communications includes data representing a human communication of sound.

287. (previously amended) The method of claim 202, wherein at least one of the communications includes data representing a human communication of sound.

288. (previously amended) The method of claim 203, wherein at least one of the communications includes data representing a human communication of sound.

289. (previously amended) The method of claim 204, wherein at least one of the communications includes data representing a human communication of sound.

290. (previously amended) The method of claim 205, wherein at least one of the communications includes data representing a human communication of sound.

291. (previously amended) The method of claim 206, wherein at least one of the communications includes data representing a human communication of sound.

Petitioner Microsoft Corporation, Ex. 1002, p. 3496

292. (previously amended) The method of claim 170, wherein at least one of the communications includes data representing a human communication of sound.

293. (previously amended) The method of claim 191, wherein at least one of the communications includes at least one of text or ascii.

294. (previously amended) The method of claim 192, wherein at least one of the communications includes at least one of text or ascii.

295. (previously amended) The method of claim 193, wherein at least one of the communications includes at least one of text or ascii.

296. (previously amended) The method of claim 194, wherein at least one of the communications includes at least one of text or ascii.

297. (previously amended) The method of claim 195, wherein at least one of the communications includes at least one of text or ascii.

298. (previously amended) The method of claim 196, wherein at least one of the communications includes at least one of text or ascii.

299. (previously amended) The method of claim 197, wherein at least one of the communications includes at least one of text or ascii.

300. (previously amended) The method of claim 198, wherein at least one of the communications includes at least one of text or ascii.

Petitioner Microsoft Corporation, Ex. 1002, p. 3497

301. (previously amended) The method of claim 199, wherein at least one of the communications includes at least one of text or ascii.

302. (previously amended) The method of claim 200, wherein at least one of the communications includes at least one of text or ascii.

303. (previously amended) The method of claim 201, wherein at least one of the communications includes at least one of text or ascii.

304. (previously amended) The method of claim 202, wherein at least one of the communications includes at least one of text or ascii.

305. (previously amended) The method of claim 203, wherein at least one of the communications includes at least one of text or ascii.

306. (previously amended) The method of claim 204, wherein at least one of the communications includes at least one of text or ascii.

307. (previously amended) The method of claim 205, wherein at least one of the communications includes at least one of text or ascii.

308. (previously amended) The method of claim 206, wherein at least one of the communications includes at least one of text or ascii.

309. (previously amended) The method of claim 170, wherein the computer

Petitioner Microsoft Corporation, Ex. 1002, p. 3498

system is comprised of an Internet service provider computer system.

310. (presently amended) The method of claim 170, further including:

storing, for the first user identity, an authorization associated with presentation of graphical multimedia ~~data~~; and

based on the authorization, presenting the graphical multimedia ~~data~~ at the output device corresponding to the second user identity.

311. (previously amended) The method of claim 170, further including:

providing the first user identity with access to a member-associated image corresponding to the second user identity.

312. (previously amended) The method of claim 170, further including:

determining whether the first user identity is censored from access to a member-associated image corresponding to the second user identity;

if the first user identity is censored, not allowing access to the member-associated image; and

if the first user identity is not censored, allowing access to the member-associated image.

313. (presently amended) The method of claim 170, wherein the data represents a pointer that ~~whereby the pointer~~ a pointer-triggered message on demand.

314. (presently amended) The method of claim 191, ~~whereby~~ wherein the pointer is a pointer that produces a pointer-triggered message on demand.

Petitioner Microsoft Corporation, Ex. 1002, p. 3499

315. (presently amended) The method of claim 196, ~~whereby~~ wherein the pointer is a pointer that produces a pointer-triggered message on demand.

316. (presently amended) The method of claim 197, ~~whereby~~ wherein the pointer is a pointer that produces a pointer-triggered message on demand.

317. (presently amended) The method of claim 198, ~~whereby~~ wherein the pointer is a pointer that produces a pointer-triggered message on demand.

318. (presently amended) The method of claim 202, ~~whereby~~ wherein the pointer is a pointer that produces a pointer-triggered message on demand.

319. (presently amended) The method of claim 203, ~~whereby~~ wherein the pointer is a pointer that produces a pointer-triggered message on demand.

320. (presently amended) The method of claim 204, ~~whereby~~ wherein the pointer is a pointer that produces a pointer-triggered message on demand.

321. (presently amended) The method of claim 206, ~~whereby~~ wherein the pointer is a pointer that produces a pointer-triggered message on demand.

322. (presently amended) The method of claim 207, wherein the data represents a pointer that ~~whereby the pointer~~ produces a pointer-triggered message on demand.

323. (presently amended) The method of claim 208, ~~whereby~~ wherein the

Petitioner Microsoft Corporation, Ex. 1002, p. 3500