US005974652A

United States Patent [19]

Kimes et al.

[11] **Patent Number: 5,974,652**

[45] **Date of Patent: *Nov. 2, 1999**

[54] **METHOD AND APPARATUS FOR UNIFORMLY CRIMPING A STENT ONTO A CATHETER**

[75] Inventors: **Richard M. Kimes**, Carlsbad; **Michael S. Mirizzi**, San Jose, both of Calif.

[73] Assignee: **Advanced Cardiovascular Systems, Inc.**, Santa Clara, Calif.

[*] Notice: This patent is subject to a terminal disclaimer.

[21] Appl. No.: **09/072,925**

[22] Filed: **May 5, 1998**

[51] **Int. Cl.**[6] **A61M 29/00**; B23P 11/00; B23P 19/02

[52] **U.S. Cl.** **29/516**; 606/1; 606/108; 606/192; 606/198; 623/1; 29/282

[58] **Field of Search** 29/516, 407.08, 29/282, 280, 715, 423, 517, 234, 235, 283, 269, 270; 606/108, 198, 1; 623/1

[56] **References Cited**

U.S. PATENT DOCUMENTS

696,289	3/1902	Williams .
4,468,224	8/1984	Enzmann et al. .
4,576,142	3/1986	Schiff .
4,644,936	2/1987	Schiff .
4,681,092	7/1987	Cho et al. .
4,697,573	10/1987	Schiff .
4,786,271	11/1988	Menn .
4,838,264	6/1989	Bremer et al. .
4,901,707	2/1990	Schiff .
4,907,336	3/1990	Gianturco .
5,132,066	7/1992	Charlesworth et al. .
5,133,732	7/1992	Wiktor .
5,183,085	2/1993	Timmermans .
5,189,786	3/1993	Ishikawa et al. .

(List continued on next page.)

FOREIGN PATENT DOCUMENTS

WO 98/14120 4/1998 WIPO .

WO 98/19633 5/1998 WIPO .

OTHER PUBLICATIONS

U.S. Patent Application Serial No. 08/795,335 filed Feb. 4, 1997.

U.S. Patent Application Serial No. 08/837,771 filed Apr. 22, 1997.

U.S. Patent Application Serial No. 08/089,936 filed Jul. 15, 1997.

U.S. Patent Application Serial No. 08/962,632 filed Nov. 3, 1997.

The eXTraordinary Stent, C.R. Bard Brochure (Undated).

Primary Examiner—David P. Bryant
Assistant Examiner—John Preta
Attorney, Agent, or Firm—Fulwider Patton Lee & Utecht, LLP

[57] **ABSTRACT**

A stent crimping tool for firmly and uniformly crimping a stent onto a balloon catheter is constructed from a crimping section holding the stent and the balloon catheter therein, wherein the crimping is actuated by a shaft having an input end and an output end, engaging the crimping section at the output end. The shaft has a detent formed into the input end. A gripping member has an internal cavity to receive the input end, and includes a hole proximate to the shaft, wherein a ball bearing and a compression spring are located within the hole to bias the ball bearing toward the shaft and to engage the detent. When a torque is applied to the gripping member, it is transmitted through the ball bearing to the shaft; if the torque exceeds a predetermined magnitude, it overcomes the force of the spring on the ball bearing causing the bearing to slide out of the detent thereby disconnecting the applied torque from the shaft. The crimping section can be a rubber tube having a lumen holding the stent and catheter. When the shaft compresses the rubber tube as it advances, the lumen collapses and crimps the stent onto the catheter. In another embodiment, the crimping section is a coiled filament suspended at both ends and having an axial space holding the stent and catheter. Rotating the shaft twists the filament which in turn constricts and crimps the stent onto the catheter.

11 Claims, 3 Drawing Sheets

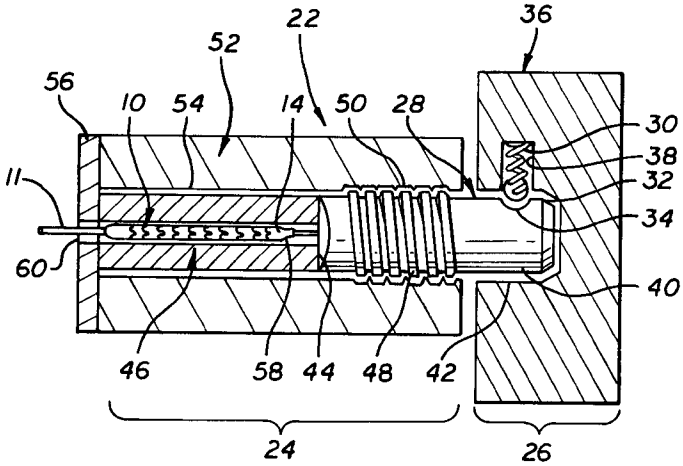

U.S. PATENT DOCUMENTS

5,263,969	11/1993	Phillips .
5,352,197	10/1994	Hammersmark et al. .
5,437,083	8/1995	Williams et al. .
5,465,716	11/1995	Avitall .
5,546,646	8/1996	Williams et al. .
5,626,474	5/1997	Kuka et al. .
5,626,604	5/1997	Cottone, Jr. .
5,630,830	5/1997	Verbeek .
5,653,691	8/1997	Rupp et al. .
5,738,674	4/1998	Williams et al. .
5,746,764	5/1998	Green et al. .
5,783,227	7/1998	Dunham .
5,785,715	7/1998	Schatz .
5,836,952	11/1998	Davis et al. .

FIG. 1

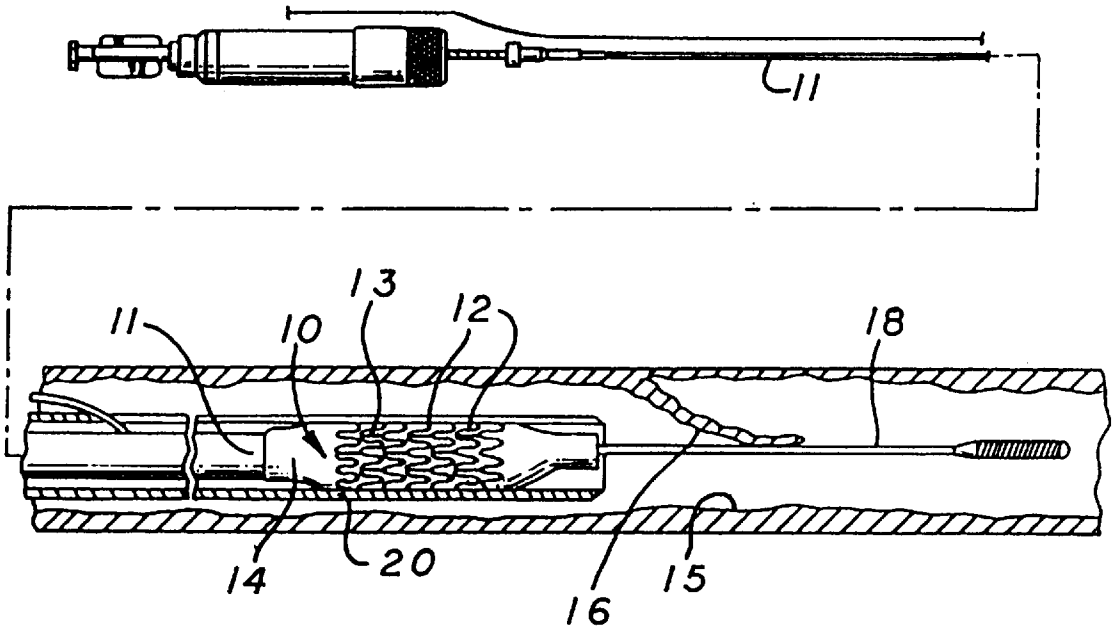

FIG. 2

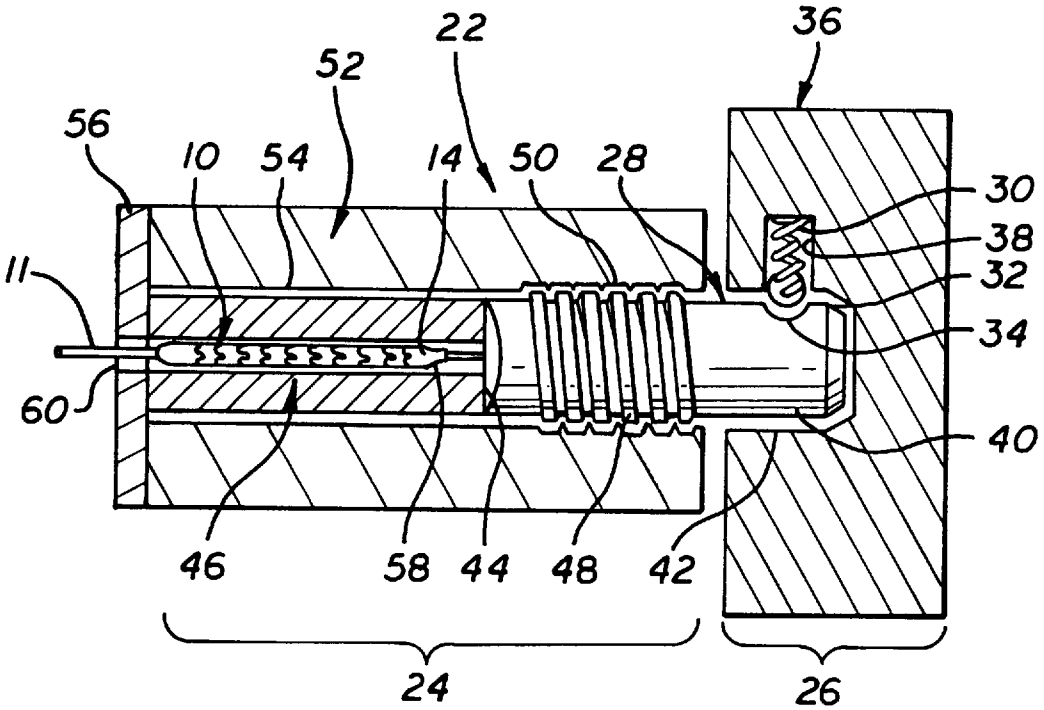

FIG. 3

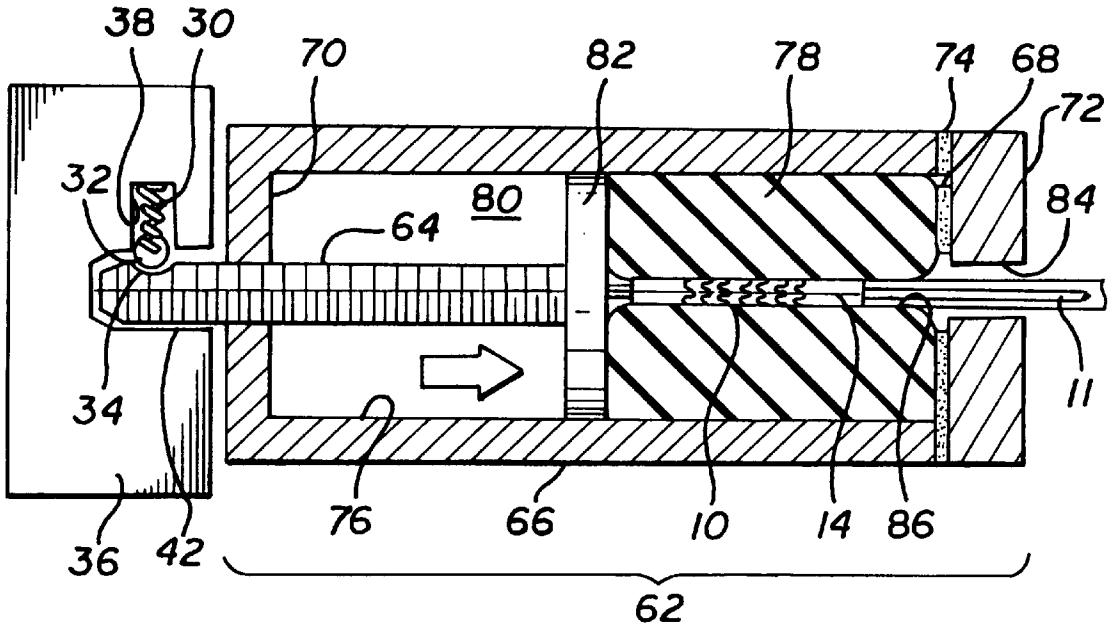

FIG. 4

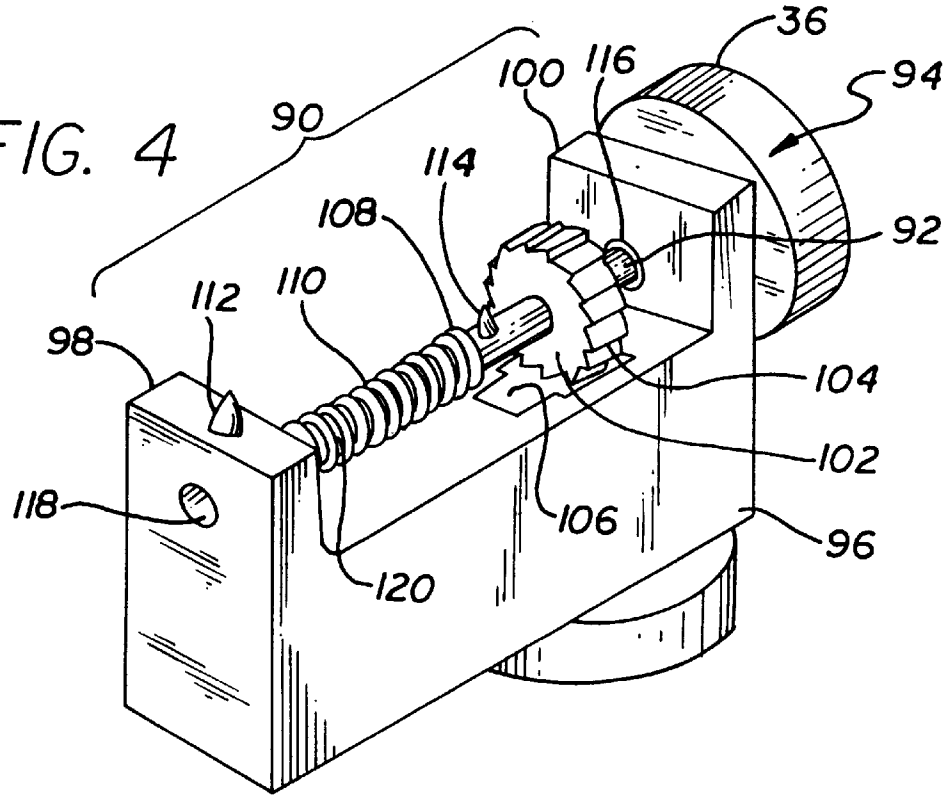

FIG. 5

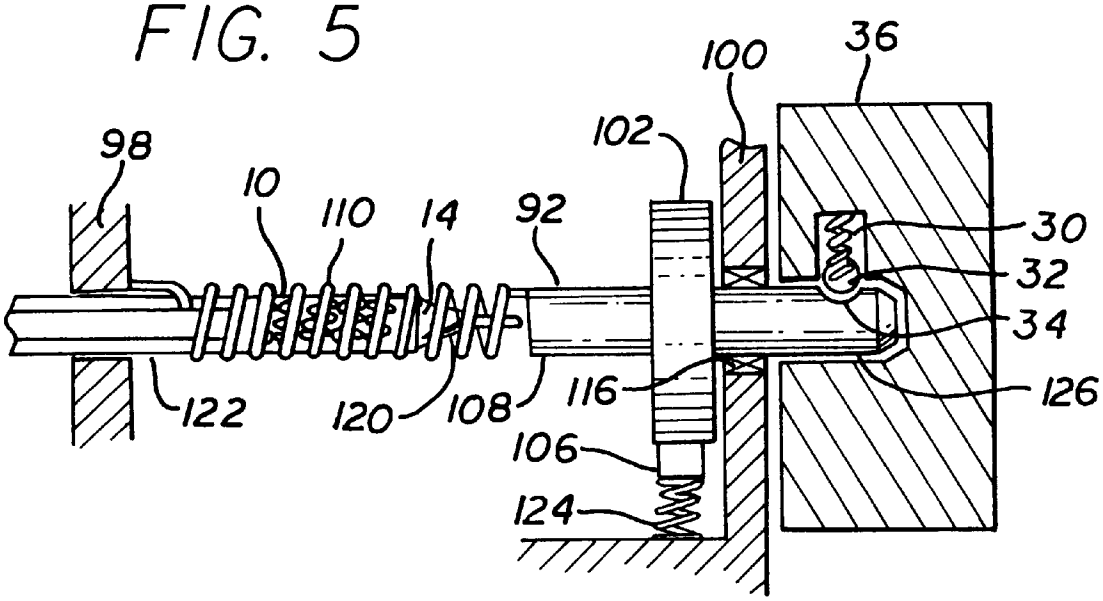

FIG. 6

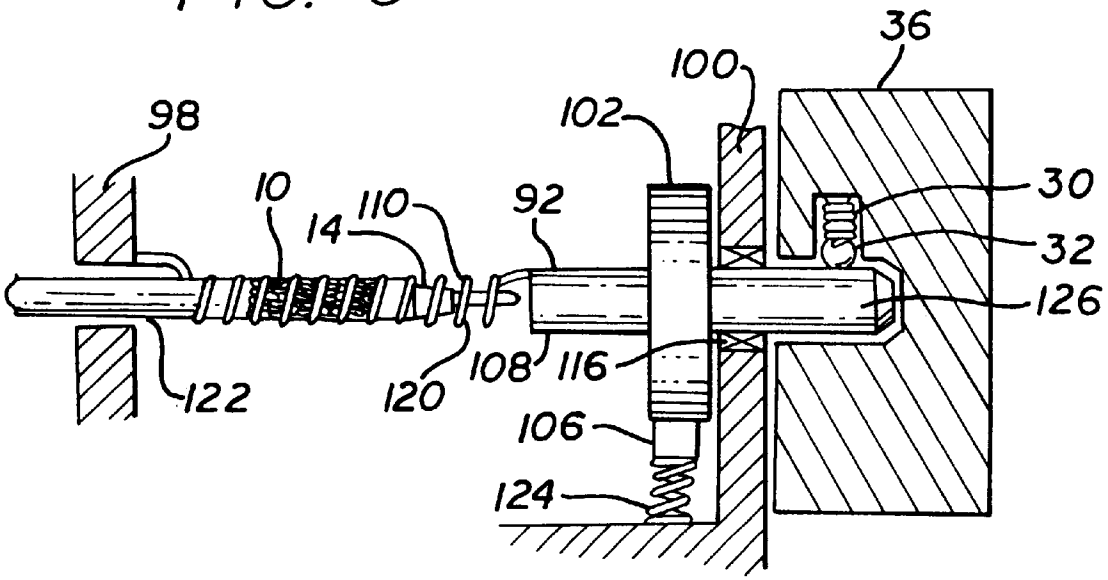

DOCKET ALARM

Explore Litigation Insights

Docket Alarm provides insights to develop a more informed litigation strategy and the peace of mind of knowing you're on top of things.

Real-Time Litigation Alerts

Keep your litigation team up-to-date with **real-time alerts** and advanced team management tools built for the enterprise, all while greatly reducing PACER spend.

Our comprehensive service means we can handle Federal, State, and Administrative courts across the country.

Advanced Docket Research

With over 230 million records, Docket Alarm's cloud-native docket research platform finds what other services can't. Coverage includes Federal, State, plus PTAB, TTAB, ITC and NLRB decisions, all in one place.

Identify arguments that have been successful in the past with full text, pinpoint searching. Link to case law cited within any court document via Fastcase.

Analytics At Your Fingertips

Learn what happened the last time a particular judge, opposing counsel or company faced cases similar to yours.

Advanced out-of-the-box PTAB and TTAB analytics are always at your fingertips.

API

Docket Alarm offers a powerful API (application programming interface) to developers that want to integrate case filings into their apps.

LAW FIRMS

Build custom dashboards for your attorneys and clients with live data direct from the court.

Automate many repetitive legal tasks like conflict checks, document management, and marketing.

FINANCIAL INSTITUTIONS

Litigation and bankruptcy checks for companies and debtors.

E-DISCOVERY AND LEGAL VENDORS

Sync your system to PACER to automate legal marketing.