US005931851A

United States Patent [19]

Morales

[11] **Patent Number: 5,931,851**

[45] **Date of Patent: Aug. 3, 1999**

[54] **METHOD AND APPARATUS FOR RUBBER-TUBE CRIMPING TOOL WITH PREMOUNT STENT**

[75] Inventor: **Stephen A. Morales**, Mountain View, Calif.

[73] Assignee: **Advanced Cardiovascular Systems, Inc.**, Santa Clara, Calif.

[21] Appl. No.: **09/063,587**

[22] Filed: **Apr. 21, 1998**

[51] **Int. Cl.**[6] **A61M 29/00**

[52] **U.S. Cl.** **606/194**; 606/198; 29/235

[58] **Field of Search** 606/198, 194, 606/192, 108; 623/1; 604/96; 29/282, 234, 235

[56] **References Cited**

U.S. PATENT DOCUMENTS

696,289	3/1902	Williams .	
4,468,224	8/1984	Enzmann et al. .	
4,576,142	3/1986	Schiff .	
4,644,936	2/1987	Schiff .	
4,681,092	7/1987	Cho et al. .	
4,697,573	10/1987	Schiff .	
4,901,707	2/1990	Schiff .	
4,907,336	3/1990	Gianturco .	
5,132,066	7/1992	Charlesworth et al. .	
5,133,732	7/1992	Wiktor .	
5,183,085	2/1993	Timmermans .	
5,189,786	3/1993	Ishikawa et al. .	
5,437,083	8/1995	Williams et al. .	
5,546,646	8/1996	Williams et al. .	
5,626,604	5/1997	Cottone, Jr. .	
5,630,830	5/1997	Verbeek .	
5,653,691	8/1997	Rupp et al. .	
5,738,674	4/1998	Williams et al. .	
5,746,764	5/1998	Green et al. .	
5,783,227	7/1998	Dunham .	
5,785,715	7/1998	Schatz .	
5,836,952	11/1998	Davis et al.	606/108

FOREIGN PATENT DOCUMENTS

WO 98/14120	4/1998	WIPO .
WO 98/19633	5/1998	WIPO .

OTHER PUBLICATIONS

U.S. Patent Application Serial No. 08/795,335 filed Feb. 4, 1997.

U.S. Patent Application Serial No. 08/837,771 filed Apr. 22, 1997.

U.S. Patent Application Serial No. 08/089,936 filed Jul. 15, 1997.

U.S. Patent Application Serial No. 08/962,632 filed Nov. 3, 1997.

The eXTraordinary Stent, C.R. Bard Brochure (Undated).

Primary Examiner—Michael Buiz
Assistant Examiner—Julian W. Woo
Attorney, Agent, or Firm—Fulwider Patton Lee & Utecht, LLP

[57] **ABSTRACT**

A stent crimping tool for firmly and uniformly crimping a stent onto a balloon catheter is constructed from a housing containing a silicone tube wherein the silicone tube is compressed by a thumb screw that is threaded into one end of the housing. The silicone tube has a passage containing a premounted uncrimped stent. The balloon catheter is inserted through the thumb screw and aligned with the stent inside the tube. Both ends of the silicone tubing are tapered and engage a tapered internal end inside the housing and a tapered recess inside the thumb screw. Advancing the thumb screw decreases the length of the silicone tubing and reshapes it so that the inside diameter of the passage decreases thereby crimping the stent onto the balloon. In an alternative embodiment, the opposite end of the housing is fitted with a second thumb screw. Further, the silicone tubing can be separated into two discrete segments by an annular washer located at a mid-point along the length of the silicone tube.

20 Claims, 3 Drawing Sheets

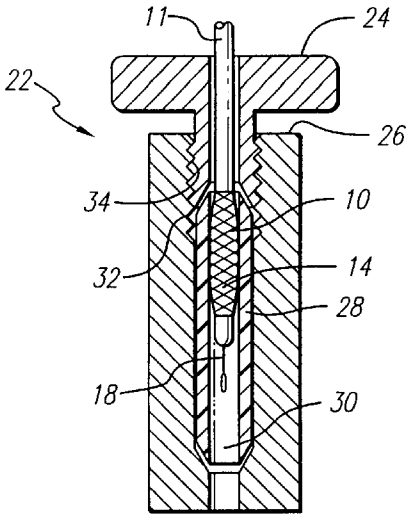

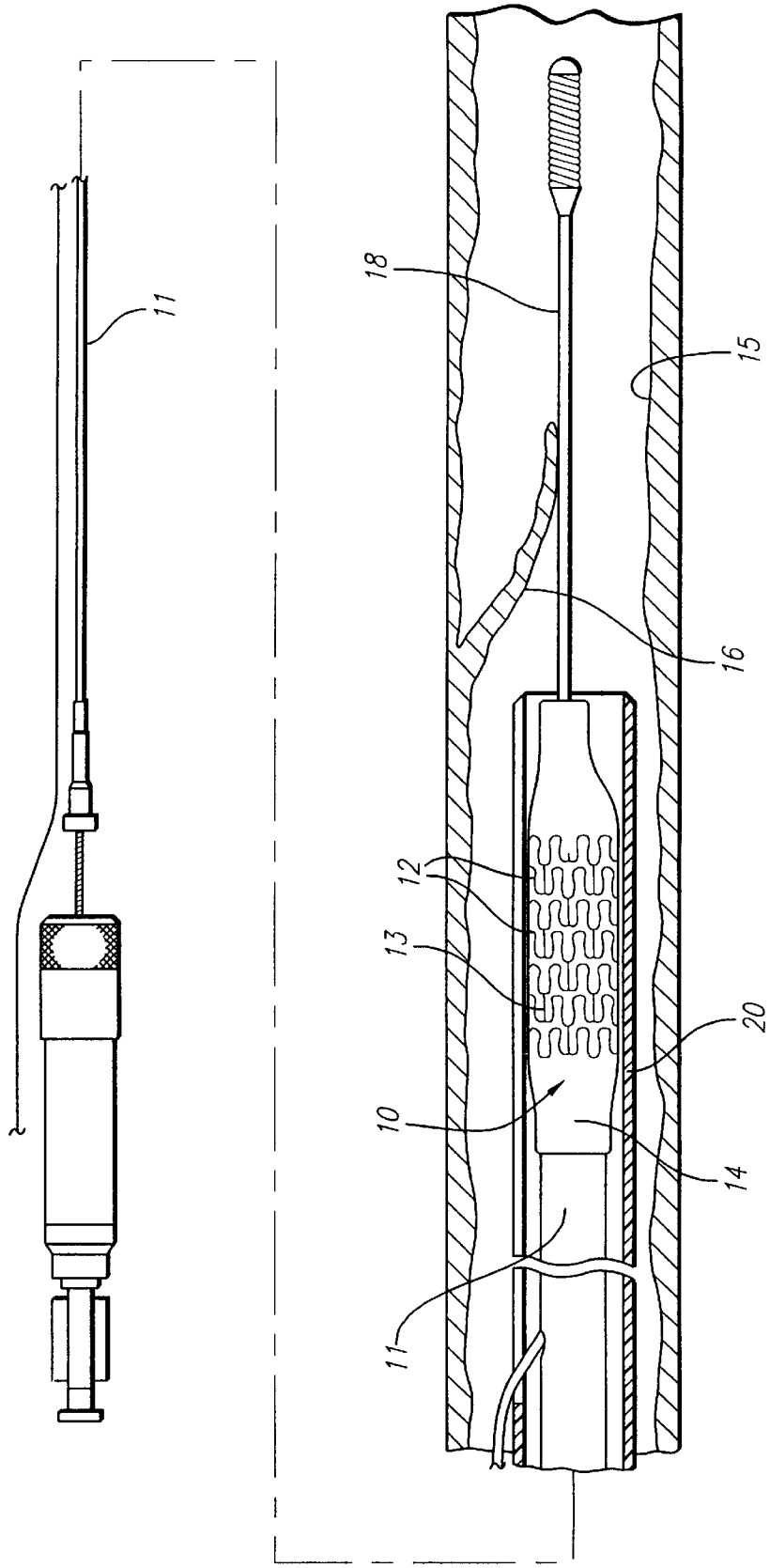

FIG. 1

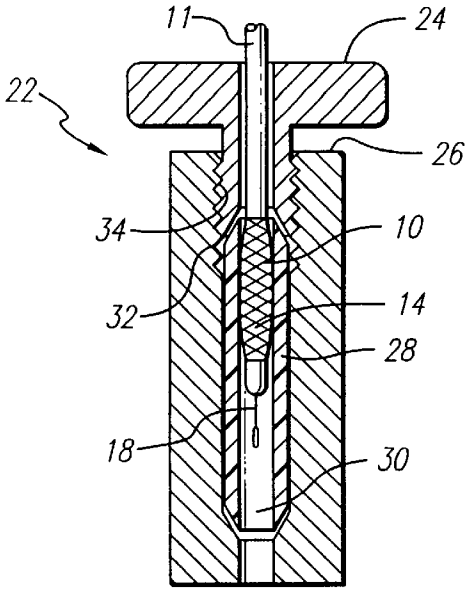

FIG. 2

FIG. 3A

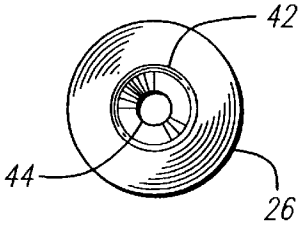

FIG. 4A

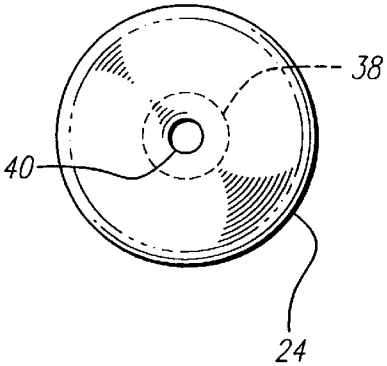

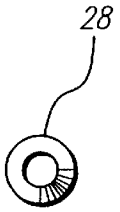

FIG. 5A

FIG. 3B

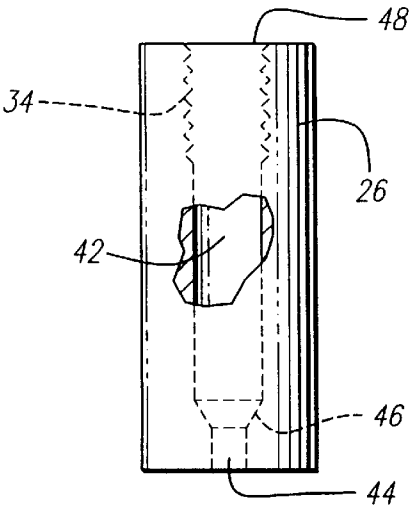

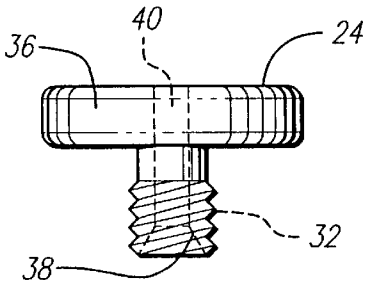

FIG. 4B

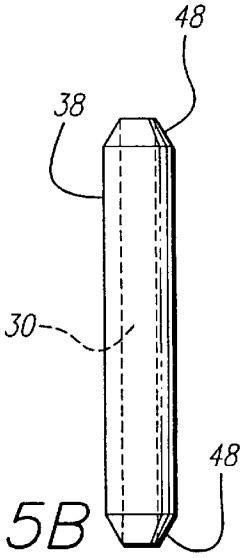

FIG. 5B

FIG. 6

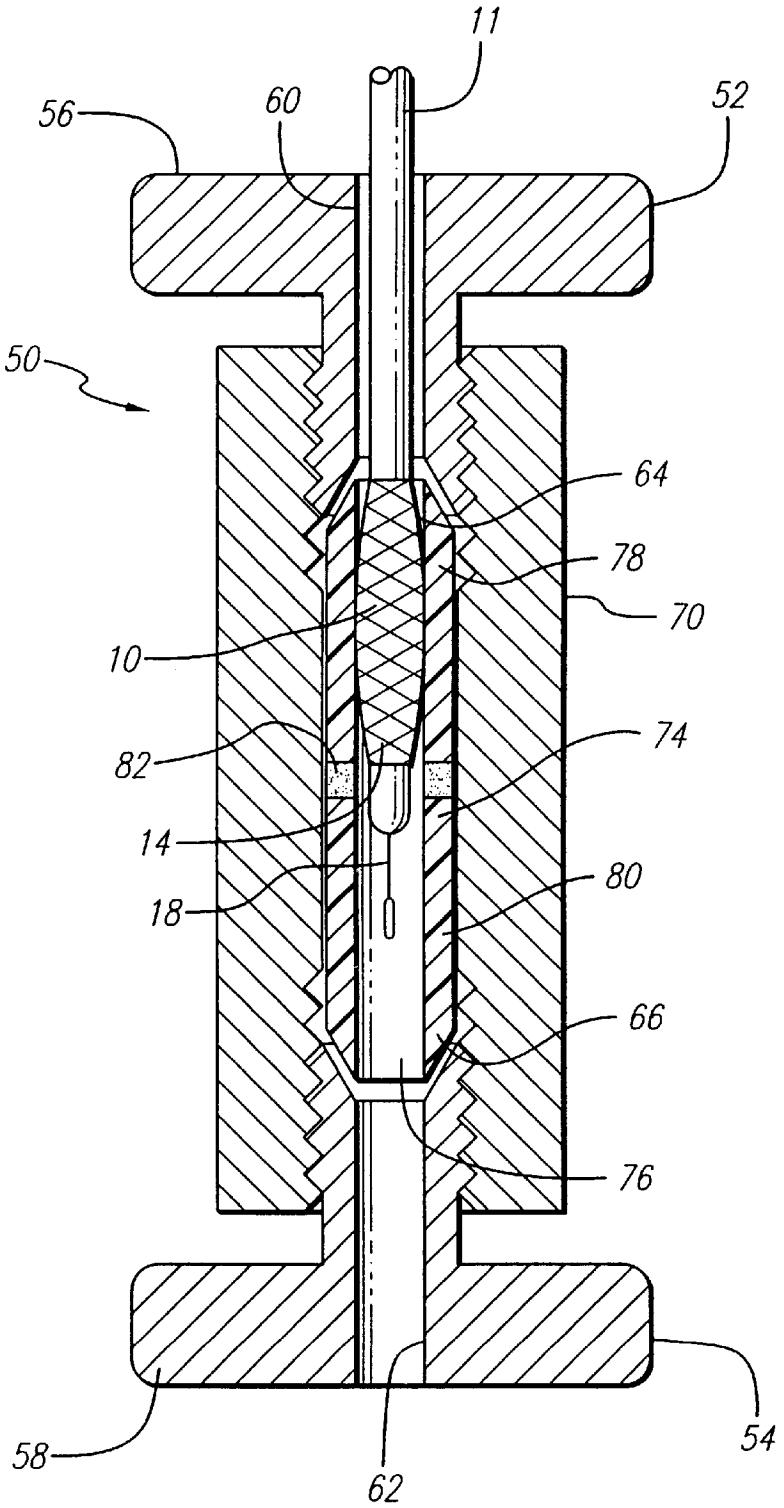

METHOD AND APPARATUS FOR RUBBER-TUBE CRIMPING TOOL WITH PREMOUNT STENT

BACKGROUND OF THE INVENTION

The present invention relates to an apparatus for loading a tubular graft, such as a stent, onto the distal end of a catheter assembly of the kind used, for example, in percutaneous transluminal coronary angioplasty (PTCA) or percutaneous transluminal angioplasty (PTA) procedures.

In typical PTCA procedures, a guiding catheter is percutaneously introduced into the cardiovascular system of a patient through the brachial or femoral arteries and advanced through the vasculature until the distal end of the guiding catheter is in the ostium. A guide wire and a dilatation catheter having a balloon on the distal end are introduced through the guiding catheter with the guide wire sliding within the dilatation catheter. The guide wire is first advanced out of the guiding catheter into the patient's coronary vasculature and the dilatation catheter is advanced over the previously advanced guide wire until the dilatation balloon is properly positioned across the arterial lesion. Once in position across the lesion, a flexible and expandable balloon is inflated to a predetermined size with a radiopaque liquid at relatively high pressures to radially compress the atherosclerotic plaque of the lesion against the inside of the artery wall and thereby dilate the lumen of the artery. The balloon is then deflated to a small profile so that the dilatation catheter can be withdrawn from the patient's vasculature and the blood flow resumed through the dilated artery. As should be appreciated by those skilled in the art, while the above-described procedure is typical, it is not the only method used in angioplasty.

In angioplasty procedures of the kind referenced above, restenosis of the artery may develop over time, which may require another angioplasty procedure, a surgical bypass operation, or some other method of repairing or strengthening the area. To reduce the likelihood of the development of restenosis and to strengthen the area, a physician can implant an intravascular prosthesis for maintaining vascular patency, commonly known as a stent, inside the artery at the lesion. The stent is crimped tightly onto the balloon portion of the catheter and transported in its delivery diameter through the patient's vasculature. At the deployment site, the stent is expanded to a larger diameter, often by inflating the balloon portion of the catheter. The stent also may be of the self-expanding type.

Since the catheter and stent travel through the patient's vasculature, and probably through the coronary arteries, the stent must have a small delivery diameter and must be firmly attached to the catheter until the physician is ready to implant it. Thus, the stent must be loaded onto the catheter so that it does not interfere with delivery, and it must not come off the catheter until it is implanted.

In procedures where the stent is placed over the balloon portion of the catheter, it is necessary to crimp the stent onto the balloon portion to reduce its diameter and to prevent it from sliding off the catheter when the catheter is advanced through the patient's vasculature. Non-uniform crimping can result in sharp edges being formed along the now uneven surface of the crimped stent. Furthermore, non-uniform stent crimping may not achieve the desired minimal profile for the stent and catheter assembly. Where the stent is not reliably crimped onto the catheter, the stent may slide off the catheter and into the patient's vasculature prematurely as a loose foreign body, possibly causing blood clots in the vasculature, including thrombosis. Therefore, it is important to ensure the proper crimping of a stent onto a catheter in a uniform and reliable manner.

This crimping is often done by hand, which can be unsatisfactory due to the uneven application of force resulting in non-uniform crimps. In addition, it is difficult to visually judge when a uniform and reliable crimp has been applied.

Some self-expanding stents are difficult to load by hand onto a delivery device such as a catheter. Furthermore, the more the stent is handled the higher the likelihood of human error, which is antithetical to a properly crimped stent. Accordingly, there is a need in the art for a device for reliably crimping a stent onto a catheter.

There have been attempts at devising a tool for crimping a stent onto a balloon delivery catheter. An example of such a tool comprises a series of plates having substantially flat and parallel surfaces that move in a rectilinear fashion with respect to each other. A stent carrying catheter is disposed between these surfaces, which surfaces crimp the stent onto the outside of the catheter by their relative motion and applied pressure. The plates have multiple degrees of freedom and may have force-indicating transducers to measure and indicate the force applied to the catheter during crimping of the stent.

Another stent loading tool design is comprised of a tubular member housing a bladder. The tubular member and bladder are constructed to hold a stent that is to be crimped onto a balloon catheter assembly. Upon placement of the stent over the balloon portion of the catheter, a valve in the loading tool is activated to inflate the bladder. The bladder compresses the stent radially inward to a reduced diameter onto the balloon portion of the catheter to achieve a snug fit. In this way, the stent is crimped onto the distal end of a balloon catheter with a minimum of human handling. The foregoing stent crimping tools are disclosed in, for example, U.S. Pat. Nos. 5,437,083 and 5,546,646 to Williams et al.

Yet another stent crimping tool is known in the art as the BARD XT, which is actually a stent loader. It is constructed from a rigid, tubular body with a ball at one end connected to a plurality of long, thin strips passing through the tubular body. An uncrimped stent is placed over the plurality of long, thin strips, which hold the stent in an expanded state. The balloon portion of a catheter is inserted into the cylindrical space formed by the plurality of strips. When the user pulls the ball while holding the tubular body against the stent, the strips are slid from beneath the stent and the stent is transferred onto the balloon portion.

Still another conventional stent crimping tool is manufactured by JOHNSON & JOHNSON and appears similar to a hinged nutcracker. Specifically, the tool is comprised of two hand operated levers hinged at one end and gripped in the palm of the hand at the opposite end. A cylindrical opening holding a crimping tube is provided through the mid-portion of the tool to receive therein a stent loaded onto a balloon catheter. The crimping operation is performed by the user squeezing the handle thereby pressing the crimping tube which in turn pinches the stent onto the balloon catheter.

While the prior art devices are suitable for crimping stents onto balloon catheters, they suffer from problems such as non-uniform crimping forces, resulting in non-uniform crimps. Consequently, they are unsuitable for use by physicians in a cath lab who desire to crimp the stent onto the balloon catheter.

SUMMARY OF THE INVENTION

Both PTCA and PTA procedures have become commonplace in treating stenoses or lesions in blood vessels and

DOCKET ALARM

Explore Litigation Insights

Docket Alarm provides insights to develop a more informed litigation strategy and the peace of mind of knowing you're on top of things.

Real-Time Litigation Alerts

Keep your litigation team up-to-date with **real-time alerts** and advanced team management tools built for the enterprise, all while greatly reducing PACER spend.

Our comprehensive service means we can handle Federal, State, and Administrative courts across the country.

Advanced Docket Research

With over 230 million records, Docket Alarm's cloud-native docket research platform finds what other services can't. Coverage includes Federal, State, plus PTAB, TTAB, ITC and NLRB decisions, all in one place.

Identify arguments that have been successful in the past with full text, pinpoint searching. Link to case law cited within any court document via Fastcase.

Analytics At Your Fingertips

Learn what happened the last time a particular judge, opposing counsel or company faced cases similar to yours.

Advanced out-of-the-box PTAB and TTAB analytics are always at your fingertips.

API

Docket Alarm offers a powerful API (application programming interface) to developers that want to integrate case filings into their apps.

LAW FIRMS

Build custom dashboards for your attorneys and clients with live data direct from the court.

Automate many repetitive legal tasks like conflict checks, document management, and marketing.

FINANCIAL INSTITUTIONS

Litigation and bankruptcy checks for companies and debtors.

E-DISCOVERY AND LEGAL VENDORS

Sync your system to PACER to automate legal marketing.