Nov. 15, 1960 S. N. SMALL 2,960,094

SOLAR ACTUATED UMBRELLA RAISING MECHANISM

Filed Dec. 3, 1957

FIG. 1.

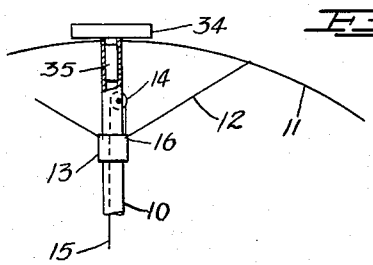

FIG. 3.

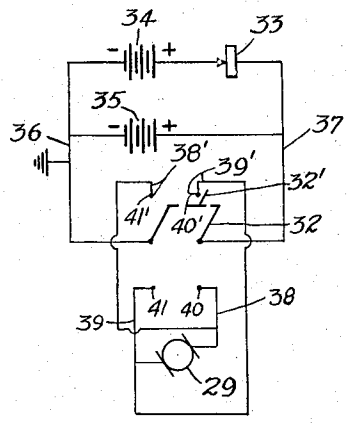

FIG. 2.

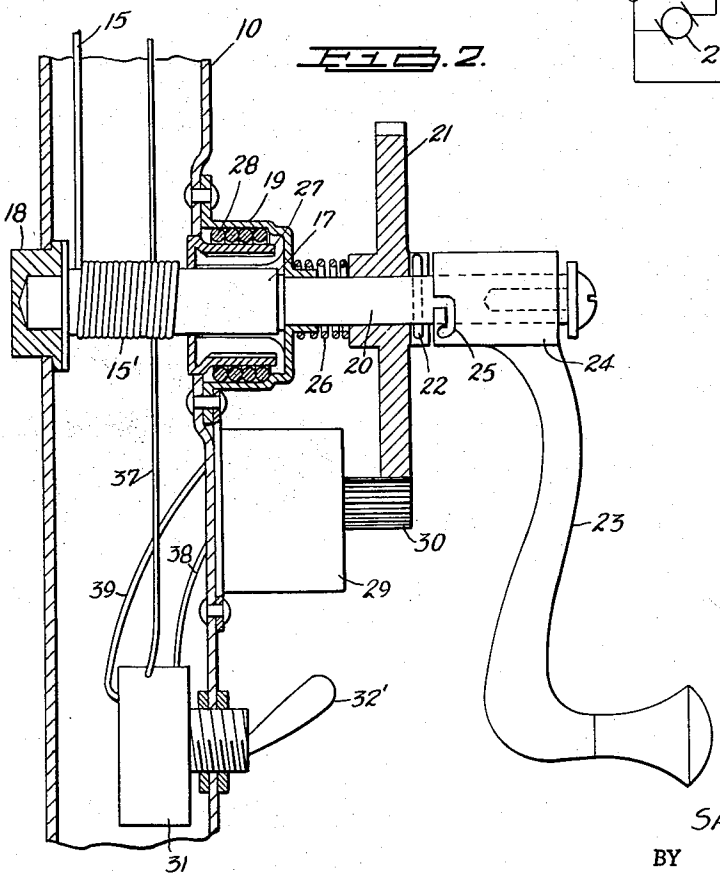

INVENTOR.
SAMUEL N. SMALL
BY
Howard E. Thompson
ATTORNEY

United States Patent Office

2,960,094

Patented Nov. 15, 1960

1

2,960,094

SOLAR ACTUATED UMBRELLA RAISING MECHANISM

Samuel N. Small, Valley Stream, N.Y., assignor to Alfred G. Cohen and Paul Weiss, both of Flushing, N.Y.

Filed Dec. 3, 1957, Ser. No. 700,501

3 Claims. (Cl. 135—22)

This invention relates to what are generally referred to as lawn and beach umbrellas usually employing a manually operated mechanical lift for moving the umbrella into open position. More particularly, the invention deals with an umbrella of the character defined of the solar actuated type, that is to say, employing a conventional battery in combination with a solar battery arranged upon the top of the umbrella, providing an electrical source of supply for actuating a drive motor for moving the umbrella into open position.

Still more particularly, the invention deals with a structure of the character described, employing manually actuated means for operating the umbrella, which means automatically moves the electrical drive means into inoperative position when in use.

The novel features of the invention will be best understood from the following description, when taken together with the accompanying drawing, in which certain embodiments of the invention are d'sclosed and, in which, the separate parts are designated by suitable reference character in each of the views and, in which:

Fig. 1 is a small diagrammatic illustration of an upper portion of an umbrella indicating the arrangement of batteries thereon and diagrammatically showing part of the umbrella in open position.

Fig. 2 is an enlarged sectional detail view of the lower post or shaft of the umbrella illustrating the electric motor drive in operative position and the manual drive in inoperative position, parts of the construction being shown in elevation; and

Fig. 3 is a diagrammatic diagram of the wiring system employed.

Considering Figs. 1 and 2 jointly, **10** represents the tubular post or pole of the umbrella having a conventional collapsible top **11** with the brace stays or rods **12** coupled with the runner **13**. In the upper end portion of the tubular post is supported a pulley **14** around which the lift or operating cord or cable **15** passes with one end fixed to the runner **13**, as diagrammatically seen at **16**. The lower end of the cord or cable **15** is secured to a drive shaft **17** and wound thereon, as indicated at **15'** in Fig. 2 of the drawing.

Mounted in one side of the post **10** is a bearing block **18** for one end of the shaft **17**. Mounted in the opposed wall of the post **10** is a break box or housing **19** through which the shaft **17** passes. The shaft **17** has a reduced protruding end **20** on which is slidably mounted a large drive gear **21** having a pin coupling with the shaft **20**, as indicated by the pin **22**, the gear being shown in coupled or clutched engagement with the shaft in Fig. 2 of the drawing. Mounted on the outer end portion of the extension **20** is a manually operable crank **23** normally free on the shaft extension **20** and the hub portion **24** of which has bayonet slot couplings **25** at opposed sides adapted to engage the pin **22** in providing a drive con-

2

gear **21** against the action of a spring **26** disposed between the gear and the housing **19**. It will thus be apparent that upon detaching or uncoupling the drive through the crank **23**, the gear **21** will automatically be moved into operative position by the spring **26**.

Arranged within the housing **19** is a break drum **27** including spring means **28** which normally supports the break drum in operative position retaining the shaft **17** against rotation. No detailed reference will be made to the break mechanism as in itself it forms no specific parts of the present conception.

Supported on the post **10** adjacent the housing **19** is a motor, diagrammatically shown at **29**, and the shaft of this motor has a protruding elongated pinion **30** meshing with the gear **21**, as diagrammatically noted. The pinion **30** is sufficiently long to permit the sliding movement of the gear **21** on the shaft extension **20** for the purposes previously described, and it might be noted at this time that when the gear **21** is in non-driving position the end **20** of the shaft **17** is free to be rotated by the crank **23**.

Suitably supported on the post **10** is a box or casing **31** containing a double pole switch, as diagrammatically seen at **32** in Fig. 3 of the drawing, and an electric automatic cutout **33**, also diagrammatically shown in Fig. 3. In Fig. 2 of the drawing, **32'** illustrates the switch lever by means of which the switch **32** can be manually operated.

Now considering Fig. 1 of the drawing, at the top center of the umbrella, and preferably supported on the upper end of the post **10**, is a solar battery, diagrammatically shown at **34**, and at **35** is illustrated a storage battery. The position of this latter battery may be anywhere along the post as its association adjacent the solar battery **34** is not essential and it can be arranged externally of the post rather than internally, as diagrammatically shown in Fig. 1.

The circuit as diagrammatically seen in Fig. 3 of the drawing is a circuit including a grounded side noted at **36**. The circuit wires from the battery extending to one pole of the switch, as indicated at **37**, the ground side extending to the other pole of the switch.

The switch controls circuit wires **38**, **39** extending to switch contacting terminals **40**, **41**, respectively, the wires **38**, **39** having branches **38'**, **39'**, extending to another pair of switch contacting terminals **41'**, **40'**, respectively.

This construction provides a reverse drive of the motor **29** so as to provide operation of the umbrella in movement into open and closed positions. It will be understood, in this connection, that upon the completion of each operation of the umbrella the switch **32** will be thrown into its off position or, in other words, the position diagrammatically illustrated in Fig. 3 of the drawing.

With a structure of the type and kind under consideration, it will be apparent that when the umbrella is in use, particularly on a sunny day, the solar battery **34** will be automatically charged to in turn charge the battery **35**, and in this operation the cutout **33** is in operative position. However, when the solar battery is not in operation the circuit through the cutout **33** is automatically broken, thus obviating the drainage of power from the storage battery and at all times providing a reserve power for initial movement of the umbrella into operative position, the solar battery serving to maintain this storage supply in the battery **35**.

If at any time the umbrella should remain out of use for a long period of time and the power of the storage battery is insufficient to operate the umbrella through the reduction gearing diagrammatically shown, then the crank **23** can be put into operation to mechanically open the umbrella and after a reasonable length of use the

I claim:

1. In umbrellas of the character described employing a tubular post, an umbrella top, a runner slidably engaging the post, a shaft mounted in connection with the lower portion of the post, an operating strand wound on said shaft and coupled with said runner for movement of the top into open and closed positions with respect to the post, a combination manual and electrical drive for said shaft, said electrical drive comprising a forward and reverse drive electric motor and switch both mounted on said post and a gear slidably mounted on said shaft and keyed thereto in one position, said gear being in operative engagement with a pinion driven by said electric motor, tensional means normally supporting said gear in keyed position with said shaft, said switch controlling operation of said electric motor, a manually operated crank on said shaft, and said crank in manual operation of said umbrella being adapted to move said gear into inoperative position in coupling the crank with the means keying the gear to said shaft.

2. In umbrellas of the character described employing a tubular post, an umbrella top, a runner slidably engaging the post, a shaft mounted in connection with the lower portion of the post, an operating strand wound on said shaft and coupled with said runner for movement of the top into open and closed positions with respect to the post, a combination manual and electrical drive for said shaft, said electrical drive comprising a forward and reverse drive electric motor and switch both mounted on said post and a gear slidably mounted on said shaft and keyed thereto in one position, said gear being in operative engagement with a pinion driven by said electric motor, tensional means normally supporting said gear in keyed position with said shaft, said switch controlling operation of said electric motor, a manually operated crank on said shaft, said crank in manual operation of said umbrella being adapted to move said gear into inoperative position in coupling the crank with the means keying the gear to said shaft, a battery supported on the post for driving said electric motor, and means at the top of said post for charging said battery.

3. In umbrellas of the character described employing a tubular post, an umbrella top, a runner slidably engaging the post, a shaft mounted in connection with the lower portion of the post, an operating strand wound on said shaft and coupled with said runner for movement of the top into open and closed positions with respect to the post, a drive for said shaft comprising a forward and reverse drive electric motor and switch both mounted on said post adjacent said shaft, said motor being in operative engagement with the shaft for rotating the shaft in forward and reverse directions in operation of the umbrella top, a battery supported on the post for actuating said electric motor, and means on the post outwardly of the umbrella top for charging said battery.

References Cited in the file of this patent

UNITED STATES PATENTS

2,224,882	Peck	Dec. 17, 1940
2,630,779	Mader	Mar. 10, 1953
2,661,752	Kampf et al.	Dec. 8, 1953
2,675,490	Portail	Apr. 13, 1954
2,721,569	Militano	Oct. 25, 1955
2,780,765	Chapin et al.	Feb. 5, 1957