United States Patent [19]

Rushing

[11] **Patent Number: 5,053,931**

[45] **Date of Patent: Oct. 1, 1991**

[54] **DIFFUSE PATIO LIGHTING ARRANGEMENT**

[76] Inventor: **John A. Rushing,** 1165 Tern Dr., Palatine, Ill. 60067

[21] Appl. No.: **566,487**

[22] Filed: **Aug. 13, 1990**

[51] **Int. Cl.**[5] **A45B 23/00**

[52] **U.S. Cl.** **362/102;** 135/910; 362/234; 362/249

[58] **Field of Search** 362/102, 227, 234, 249, 362/252, 253, 806; 135/DIG. 10, 910

[56] **References Cited**

U.S. PATENT DOCUMENTS

1,166,272	12/1915	Smithing	362/102
2,087,537	7/1937	Finkel	362/102
2,453,925	11/1948	Mendonca	362/123 X
3,036,206	5/1962	Holbrook	362/806
3,313,929	4/1967	Schiavone	362/102
3,723,723	3/1973	Lerner	362/249 X
3,870,062	3/1975	Medlin	362/102 X
4,079,344	3/1978	Lauben et al.	439/106 X
4,174,532	11/1979	Kelley	362/102
4,848,385	7/1989	Pennella	135/16
4,860,179	8/1989	Mui et al.	362/102

Primary Examiner—Stephen F. Husar

[57] **ABSTRACT**

A lighting arrangement is provided that is generally useful for a variety of outdoor lighting applications and in particular on patio umbrellas. The lighting has a radial arrangement of the lights that extend from a central connector box. The central connector box allows a multiplicity of light strings to emanate from a single power source. A diffuse and attractive light display is provided by the large number of small lights. A rain resistant cover over the central connector box protects against electrical shock. As an added safety feature the lighting arrangement will usually include a ground fault circuit interrupt device "GFCI" on a central power supply cord to prevent electrical shock. The ground fault interrupt is particularly advantageous when the lighting arrangement is located on conductive materials.

13 Claims, 3 Drawing Sheets

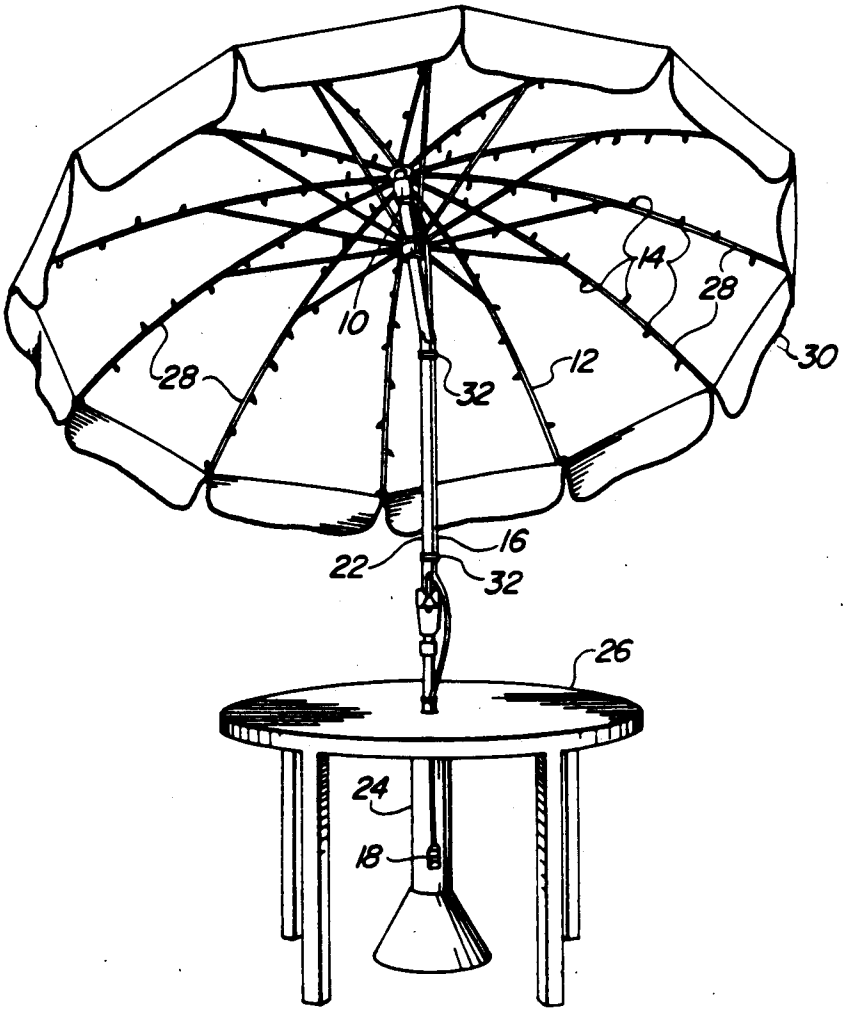

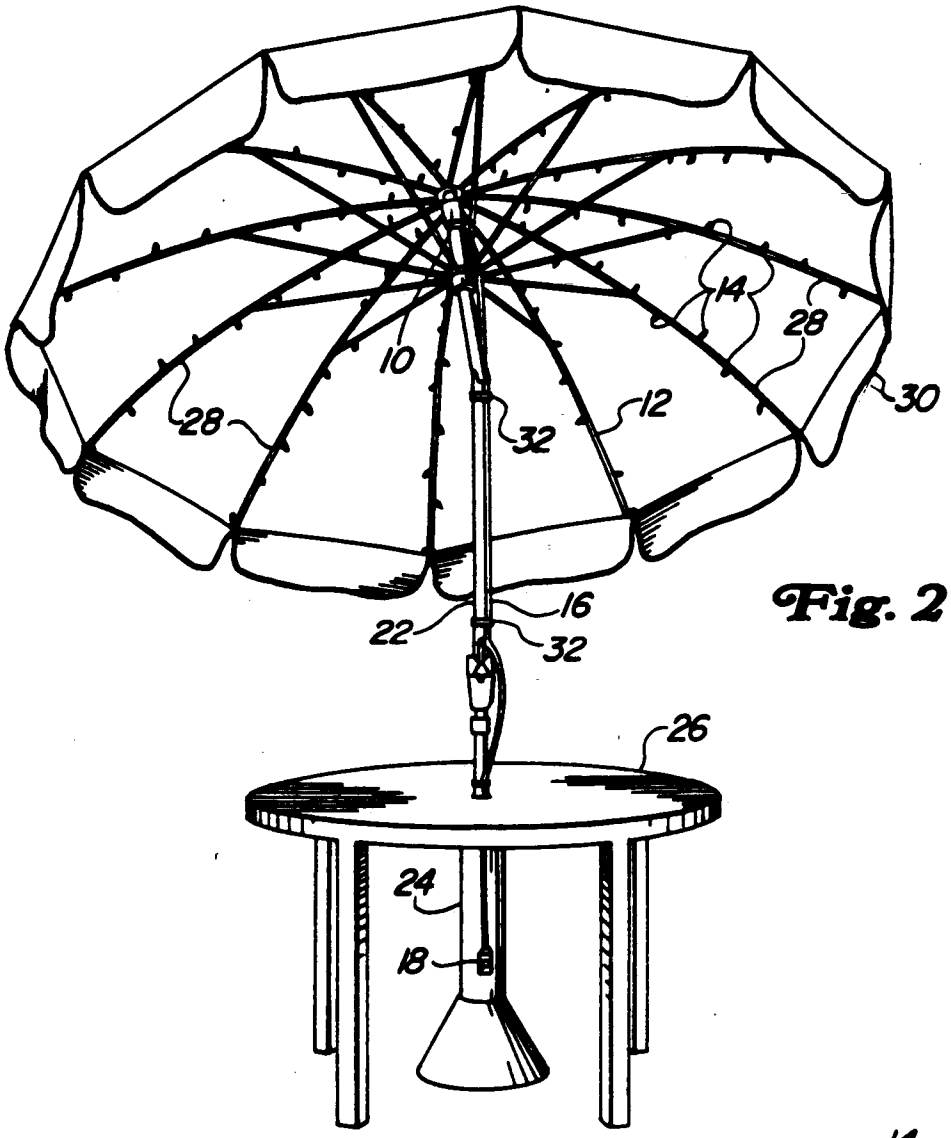

Fig. 2

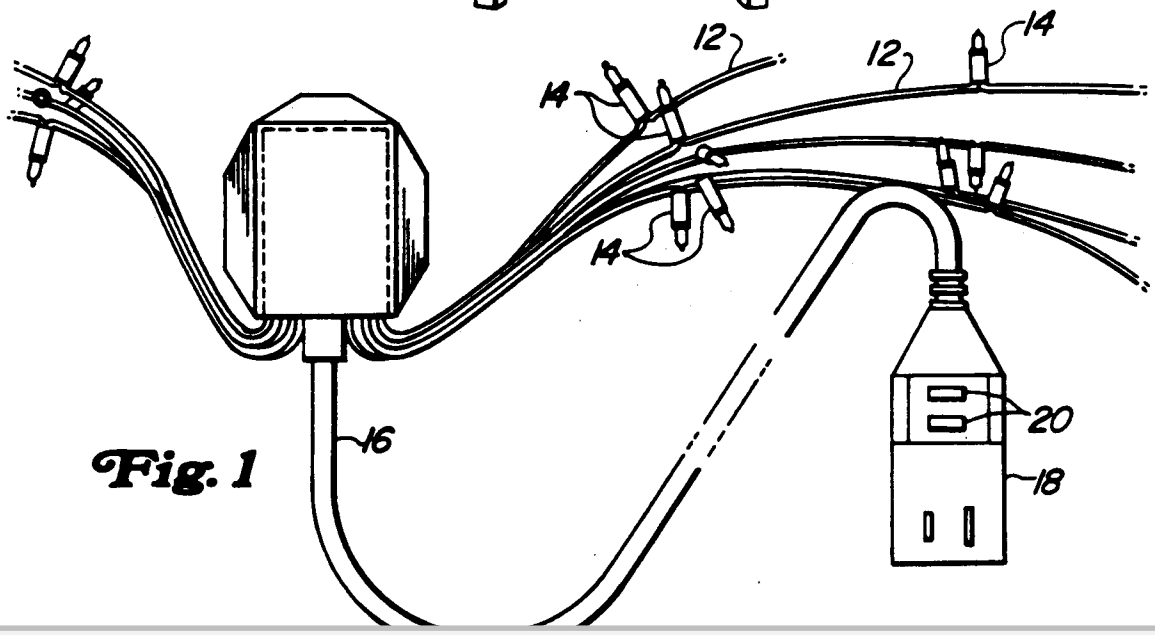

Fig. 1

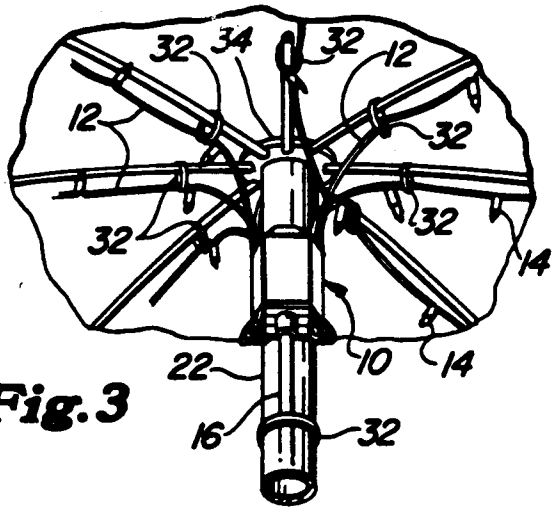

Fig. 3

Fig. 4

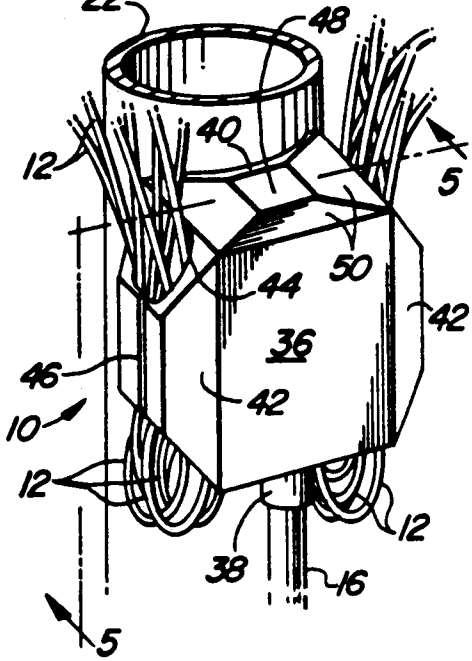

Fig. 5

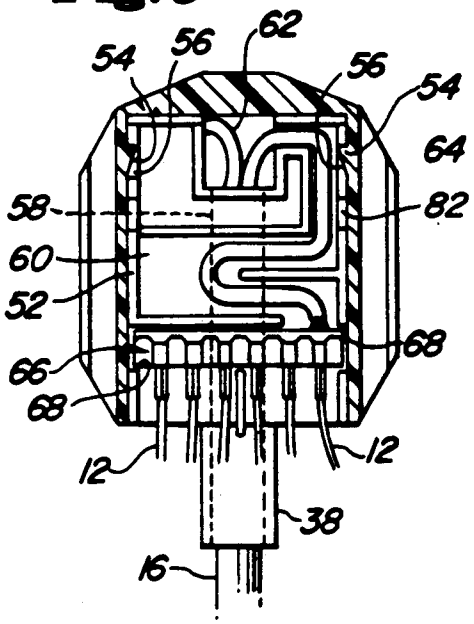

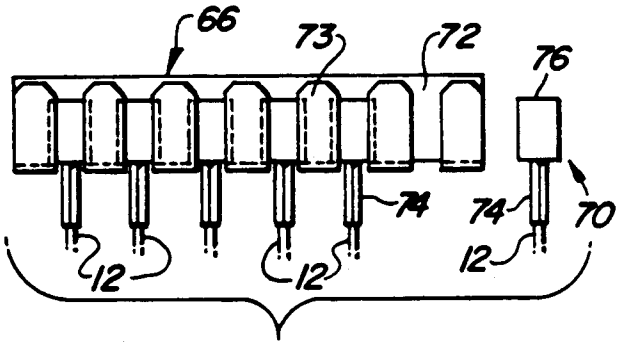

Fig. 7

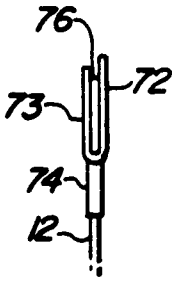

Fig. 8

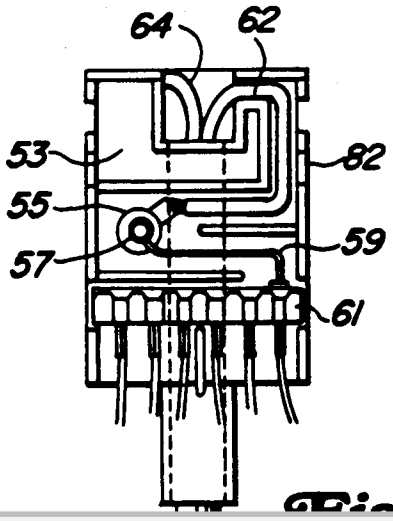

Fig. 6

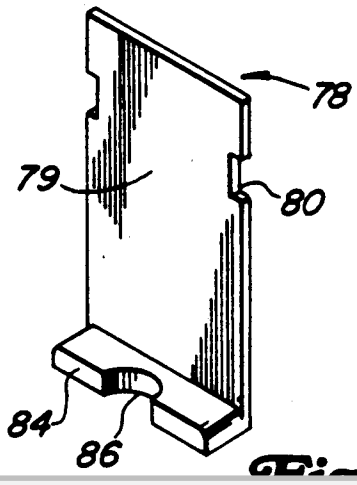

Fig. 9

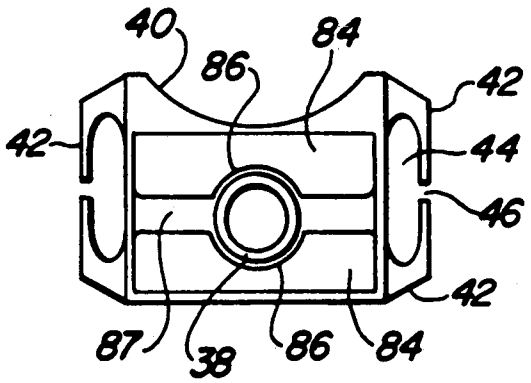

Fig. 10

DIFFUSE PATIO LIGHTING ARRANGEMENT

FIELD OF THE INVENTION

This invention relates to the use of miniature lights. More specifically this invention relates to the outdoor use of miniature lights in a radial arrangement that is suitable for the illumination of an outdoor patio umbrella.

DESCRIPTION OF THE PRIOR ART

Many homes and outdoor entertainment areas have table arrangements with overhead patio umbrellas that are used to shade the sun during the day. Attempts have been made to illuminate these umbrellas at night by the use of different lighting arrangements. Such prior art arrangements include garden umbrellas and patio umbrellas as shown in U.S. Pat. Nos. 2,087,537 issued to Finkel and U.S. Pat. No. 4,174,532 issued to Kelley. Both Finkel and Kelley show the use of three or four incandescent bulbs underneath the top and in the center of a garden umbrella to illuminate the area under the umbrella. U.S. Pat. No. 3,313,929 issued to Schiavone shows a lawn or beach umbrella having a fluorescent light located in the center support pole to illuminate the area underneath the umbrella. A pavilion umbrella, shown in U.S. Pat. No. 3,870,062 issued to Medlin, is similar to Finkel and Kelley in that it uses central incandescent lighting to provide illumination of the umbrella. Medlin is different, however, in that it includes a lower translucent cover that hides the ribs and retracting mechanism of the umbrella. All of these umbrella configurations are characterized by relatively concentrated light that has the aforementione disadvantage of attracting bugs and insects.

Another important consideration in the design of lighting systems for outdoor use in structures such as patio umbrellas is the hazard of electrical shock. Such umbrellas are usually left outside and can become wet. Electrically conductive material are usually used in the construction of such patio umbrellas. The use of household electric current to illuminate the umbrellas can shock someone who comes in contact with improperly grounded parts of the umbrella, umbrella base, or other structures from which the umbrella is supported such as a metal table and chair set. In most of the prior art patio light arrangements that use only a few light bulbs, each light can be effectively insulated to prevent electrical shock. Protecting against electrical shock becomes more difficult as the number of lights that are used to illuminate the umbrella increases.

Other lighting arrangements for umbrellas that use a number of small incandescent light can be found on hand held hand held umbrellas. U.S. Pat. No. 4,848,385 issued to Pennella shows a hand umbrella with a battery operated light at the top of the center stick of the umbrella. U.S. Pat. Nos. 4,860,179 issued to Mui et. al. and U.S. Pat. No. 1,166,272 issued to Smithing show battery operated lights in a hand umbrella at the top and bottom of the umbrella stick and at the ends of the umbrella support ribs. The battery operated systems of these umbrella and the limited lighting provided by the small lights is unsuitable for the illumination of patio type umbrellas.

Arrays of miniature lights that use household current to provide a substantial amount of illumination are also known. Such lighting arrangements have been disclosed for use as Christmas tree decorations. U.S. Pat. No. 3,723,723 issued to Lerner shows a miniature Christmas tree light arrangement having a plurality of light strings arranged with individual lights in series and all of the stings connected in parallel to a central connection block. Another arrangement of multiple strings of Christmas tree lights is shown in U.S. Pat. No. 2,453,925 issued to Mendonca. The arrangement of Mendonca teaches the electrical connection of the light strings to central connector plates which are also connected to a household power cord. The only use described for these light arrangements is on indoor Christmas trees.

It is an object of this invention to provide outdoor illumination that is sufficiently diffuse to prevent the attraction of bugs and insects and designed to prevent shock when mounted on electrically conductive structures such as patio furniture.

A more specific object of this invention is to provide a method and lighting arrangement for the illumination of patio or lawn type umbrellas that provides diffuse light an does not pose a risk of electrical shock.

It is a further object of this invention to provide an attractive and unusual method of illuminating patio and lawn type umbrellas.

A yet further object of this invention is to provide a lighting arrangement that is readily added to a patio or lawn type umbrella and will provide diffuse light without the hazard of electrical shock.

Yet another object of this invention is to provide a connector arrangement that facilities connection of individual light strings in parallel to a common electrical power source.

BRIEF SUMMARY OF THE INVENTION

This invention is an array of miniature lights that consists of separate strands of lights that are connected in parallel to an ordinary household electrical outlet through a power cord and a water resistant central connection box. The multiple strings provide a large number of miniature lights that are sufficient in number to provide illumination, but still diffuse enough to avoid the concentrated light source that will attract insects. The water resistant central connection box minimizes the risk of electrical shock from exposure of the light array to the elements. Electrical shock hazard can be further reduced by the use of ground fault interrupt circuit "GFCI" in the power cord. A particularly beneficial use of the light array is underneath a patio or lawn umbrella where the light strands are secured to the ribs of the umbrella. Use of the system underneath the umbrella provides diffuse and pleasing illumination while the design of the array prevents the hazard of electrical shock.

Accordingly, in one aspect this invention is a lighting apparatus designed for outdoor use in a radially extending pattern. The lighting apparatus has a power supply cord for an electrical outlet, a plurality of miniature light strings with the lights in each string connected in a series circuit, and a central connection box having means for electrically connecting each of the light strings in parallel to the power supply cord. The central connection box includes a cover having water impervious sides and a water impervious top.

In another embodiment this invention is a lighting apparatus for outdoor use in a patio umbrella having radially extending ribs for supporting a covering material. The apparatus includes a power supply cord for an central outlet and a plurality of miniature light strings

DOCKET ALARM

Explore Litigation Insights

Docket Alarm provides insights to develop a more informed litigation strategy and the peace of mind of knowing you're on top of things.

Real-Time Litigation Alerts

Keep your litigation team up-to-date with **real-time alerts** and advanced team management tools built for the enterprise, all while greatly reducing PACER spend.

Our comprehensive service means we can handle Federal, State, and Administrative courts across the country.

Advanced Docket Research

With over 230 million records, Docket Alarm's cloud-native docket research platform finds what other services can't. Coverage includes Federal, State, plus PTAB, TTAB, ITC and NLRB decisions, all in one place.

Identify arguments that have been successful in the past with full text, pinpoint searching. Link to case law cited within any court document via Fastcase.

Analytics At Your Fingertips

Learn what happened the last time a particular judge, opposing counsel or company faced cases similar to yours.

Advanced out-of-the-box PTAB and TTAB analytics are always at your fingertips.

API

Docket Alarm offers a powerful API (application programming interface) to developers that want to integrate case filings into their apps.

LAW FIRMS

Build custom dashboards for your attorneys and clients with live data direct from the court.

Automate many repetitive legal tasks like conflict checks, document management, and marketing.

FINANCIAL INSTITUTIONS

Litigation and bankruptcy checks for companies and debtors.

E-DISCOVERY AND LEGAL VENDORS

Sync your system to PACER to automate legal marketing.