PTO/SB/06 (09-11)
Approved for use through 1/31/2014. OMB 0651-0032
U.S. Patent and Trademark Office; U.S. DEPARTMENT OF COMMERCE
Under the Paperwork Reduction Act of 1995, no persons are required to respond to a collection of information unless it displays a valid OMB control number.

PATENT APPLICATION FEE DETERMINATION RECORD Substitute for Form PTO-875	Application or Docket Number 13/439,605	Filing Date 04/04/2012	☐ To be Mailed

ENTITY: ☐ LARGE ☒ SMALL ☐ MICRO

APPLICATION AS FILED – PART I

FOR	(Column 1) NUMBER FILED	(Column 2) NUMBER EXTRA	RATE ($)	FEE ($)
☐ BASIC FEE (37 CFR 1.16(a), (b), or (c))	N/A	N/A	N/A	
☐ SEARCH FEE (37 CFR 1.16(k), (i), or (m))	N/A	N/A	N/A	
☐ EXAMINATION FEE (37 CFR 1.16(o), (p), or (q))	N/A	N/A	N/A	
TOTAL CLAIMS (37 CFR 1.16(i))	minus 20 =	*	X $ =	
INDEPENDENT CLAIMS (37 CFR 1.16(h))	minus 3 =	*	X $ =	
☐ APPLICATION SIZE FEE (37 CFR 1.16(s))	If the specification and drawings exceed 100 sheets of paper, the application size fee due is $310 ($155 for small entity) for each additional 50 sheets or fraction thereof. See 35 U.S.C. 41(a)(1)(G) and 37 CFR 1.16(s).			
☐ MULTIPLE DEPENDENT CLAIM PRESENT (37 CFR 1.16(j))				
* If the difference in column 1 is less than zero, enter "0" in column 2.			TOTAL	

APPLICATION AS AMENDED – PART II

AMENDMENT **06/29/2015**

	(Column 1) CLAIMS REMAINING AFTER AMENDMENT		(Column 2) HIGHEST NUMBER PREVIOUSLY PAID FOR	(Column 3) PRESENT EXTRA	RATE ($)	ADDITIONAL FEE ($)
Total (37 CFR 1.16(i))	* 11	Minus	** 20	= 0	X $40 =	0
Independent (37 CFR 1.16(h))	* 2	Minus	***3	= 0	X $210 =	0
☐ Application Size Fee (37 CFR 1.16(s))						
☐ FIRST PRESENTATION OF MULTIPLE DEPENDENT CLAIM (37 CFR 1.16(j))						
					TOTAL ADD'L FEE	0

AMENDMENT

	(Column 1) CLAIMS REMAINING AFTER AMENDMENT		(Column 2) HIGHEST NUMBER PREVIOUSLY PAID FOR	(Column 3) PRESENT EXTRA	RATE ($)	ADDITIONAL FEE ($)
Total (37 CFR 1.16(i))	*	Minus	**	=	X $ =	
Independent (37 CFR 1.16(h))	*	Minus	***	=	X $ =	
☐ Application Size Fee (37 CFR 1.16(s))						
☐ FIRST PRESENTATION OF MULTIPLE DEPENDENT CLAIM (37 CFR 1.16(j))						
					TOTAL ADD'L FEE	

* If the entry in column 1 is less than the entry in column 2, write "0" in column 3.
** If the "Highest Number Previously Paid For" IN THIS SPACE is less than 20, enter "20".
*** If the "Highest Number Previously Paid For" IN THIS SPACE is less than 3, enter "3".
The "Highest Number Previously Paid For" (Total or Independent) is the highest number found in the appropriate box in column 1.

LIE
/PHYLLIS CANTY/

This collection of information is required by 37 CFR 1.16. The information is required to obtain or retain a benefit by the public which is to file (and by the USPTO to process) an application. Confidentiality is governed by 35 U.S.C. 122 and 37 CFR 1.14. This collection is estimated to take 12 minutes to complete, including gathering, preparing, and submitting the completed application form to the USPTO. Time will vary depending upon the individual case. Any comments on the amount of time you require to complete this form and/or suggestions for reducing this burden, should be sent to the Chief Information Officer, U.S. Patent and Trademark Office, U.S. Department of Commerce, P.O. Box 1450, Alexandria, VA 22313-1450. DO NOT SEND FEES OR COMPLETED FORMS TO THIS ADDRESS. **SEND TO: Commissioner for Patents, P.O. Box 1450, Alexandria, VA 22313-1450.**
If you need assistance in completing the form, call 1-800-PTO-9199 and select option 2.

AO 120 (Rev. 08/10)

TO:	REPORT ON THE FILING OR DETERMINATION OF AN ACTION REGARDING A PATENT OR TRADEMARK
Mail Stop 8 Director of the U.S. Patent and Trademark Office P.O. Box 1450 Alexandria, VA 22313-1450	

In Compliance with 35 U.S.C. § 290 and/or 15 U.S.C. § 1116 you are hereby advised that a court action has been filed in the U.S. District Court Transferred to Delaware from Alabama on the following

☐ Trademarks or ☑ Patents. (☐ the patent action involves 35 U.S.C. § 292.):

DOCKET NO.	DATE FILED	U.S. DISTRICT COURT
15-cv-121-RGA	7/17/2014	Transferred to Delaware from Alabama

PLAINTIFF	DEFENDANT
ADTRAN, Inc.	TQ Delta, LLC

	PATENT OR TRADEMARK NO.	DATE OF PATENT OR TRADEMARK	HOLDER OF PATENT OR TRADEMARK
1	See Attachment #1		
2			
3			
4			
5			

In the above—entitled case, the following patent(s)/ trademark(s) have been included:

DATE INCLUDED	INCLUDED BY ☐ Amendment ☑ Answer ☐ Cross Bill ☐ Other Pleading	
3/13/2015		
PATENT OR TRADEMARK NO.	DATE OF PATENT OR TRADEMARK	HOLDER OF PATENT OR TRADEMARK
1 See Attachment #2		
2		
3		
4		
5		

In the above—entitled case, the following decision has been rendered or judgement issued:

DECISION/JUDGEMENT

CLERK	(BY) DEPUTY CLERK	DATE

Copy 1—Upon initiation of action, mail this copy to Director Copy 3—Upon termination of action, mail this copy to Director
Copy 2—Upon filing document adding patent(s), mail this copy to Director Copy 4—Case file copy

Attachment #1

Patent or Trademark No.	Date of Patent or Trademark	Holder of Patent or Trademark
1.U.S. 7,453,881 B2	11/18/2008	TQ Delta, LLC
2.U.S. 7,809,028 B2	10/05/2010	TQ Delta, LLC
3.U.S. 7,978,706 B2	7/12/2011	TQ Delta, LLC
4.U.S. 8,422,511 B2	4/16/2013	TQ Delta, LLC
5.U.S. 6,445,730 B1	9/03/2002	TQ Delta, LLC
6.U.S. 7,292,627 B2	11/6/2007	TQ Delta, LLC
7.U.S. 7,451,379 B2	11/11/2008	TQ Delta, LLC
8.U.S. 7,471,721 B2	12/30/2008	TQ Delta, LLC
9.U.S. 7,570,686 B2	8/4/2009	TQ Delta, LLC
10. U.S. 7,831,890 B2	11/09/2010	TQ Delta, LLC
11. U.S. 7,835,430 B2	11/16/2010	TQ Delta, LLC
12. U.S. 7,836,381 B1	11/16/2010	TQ Delta, LLC
13. U.S. 7,844,882 B2	11/30/2010	TQ Delta, LLC
14. U.S. 7,889,784 B2	2/15/2011	TQ Delta, LLC
15. U.S. 7,925,958 B2	04/12/2011	TQ Delta, LLC
16. U.S. 7,978,753 B2	07/12/2011	TQ Delta, LLC
17. U.S. 7,979,778 B2	07/12/2011	TQ Delta, LLC
18. U.S. 8,073,041 B1	12/6/2011	TQ Delta, LLC
19. U.S. 8,090,008 B2	1/3/2012	TQ Delta, LLC
20. U.S. 8,218,610 B2	7/10/2012	TQ Delta, LLC
21. U.S. 8,238,412 B2	08/07/2012	TQ Delta, LLC
22. U.S. 8,276,048 B2	09/25/2012	TQ Delta, LLC
23. U.S. 8,355,427 B2	1/15/2013	TQ Delta, LLC

24. U.S. 8,432,956 B2	4/30/2013	TQ Delta, LLC
25. U.S. 8,437,382 B2	5/7/2013	TQ Delta, LLC
26. U.S. 8,462,835 B2	6/11/2013	TQ Delta, LLC
27. U.S. 8,495,473 B2	7/23/2013	TQ Delta, LLC
28. U.S. 8,516,337 B2	08/20/2013	TQ Delta, LLC

Attachment #2

	PATENT OR TRADEMARK NO.	DATE OF PATENT OR TRADEMARK	HOLDER OF PATENT OR TRADEMARK
1	US 7,796,705 B2	9/14/2010	TQ Delta, LLC
2	US 8,335,956 B2	12/18/2012	TQ Delta, LLC
3	US 8,407,546 B2	3/26/2013	TQ Delta, LLC
4	US 8,468,411 B2	6/18/2013	TQ Delta, LLC
5	US 8,645,784 B2	2/4/2014	TQ Delta, LLC
6	US 8,595,577 B2	11/26/2013	TQ Delta, LLC

AO 120 (Rev. 08/10)

TO:	REPORT ON THE FILING OR DETERMINATION OF AN ACTION REGARDING A PATENT OR TRADEMARK
Mail Stop 8 Director of the U.S. Patent and Trademark Office P.O. Box 1450 Alexandria, VA 22313-1450	

In Compliance with 35 U.S.C. § 290 and/or 15 U.S.C. § 1116 you are hereby advised that a court action has been filed in the U.S. District Court District of Delaware on the following

☐ Trademarks or ☑ Patents. (☐ the patent action involves 35 U.S.C. § 292.):

DOCKET NO.	DATE FILED	U.S. DISTRICT COURT
	7/18/2014	District of Delaware

PLAINTIFF	DEFENDANT
TQ Delta, LLC	ADTRAN, Inc.

PATENT OR TRADEMARK NO.	DATE OF PATENT OR TRADEMARK	HOLDER OF PATENT OR TRADEMARK
1 See Attached		
2 32 Pats		
3		
4		
5		

In the above—entitled case, the following patent(s)/ trademark(s) have been included:

DATE INCLUDED	INCLUDED BY ☐ Amendment ☐ Answer ☐ Cross Bill ☐ Other Pleading	
PATENT OR TRADEMARK NO.	DATE OF PATENT OR TRADEMARK	HOLDER OF PATENT OR TRADEMARK
1		
2		
3		
4		
5		

In the above—entitled case, the following decision has been rendered or judgement issued:

DECISION/JUDGEMENT

CLERK	(BY) DEPUTY CLERK	DATE

Copy 1—Upon initiation of action, mail this copy to Director Copy 3—Upon termination of action, mail this copy to Director
Copy 2—Upon filing document adding patent(s), mail this copy to Director Copy 4—Case file copy

	PATENT OR TRADEMARK NO.	DATE OF PATENT OR TRADEMARK	HOLDER OF PATENT OR TRADEMARK
1	US 8,090,008 B2	1/3/2012	TQ Delta, LLC
2	US 8,073,041 B1	12/6/2011	TQ Delta, LLC
3	US 7,292,627 B2	11/6/2007	TQ Delta, LLC
4	US 7,471,721 B2	12/30/2008	TQ Delta, LLC
5	US 8,218,610 B2	7/10/2012	TQ Delta, LLC
6	US 8,355,427 B2	1/15/2013	TQ Delta, LLC
7	US 7,453,881 B2	11/18/2008	TQ Delta, LLC
8	US 7,809,028 B2	10/5/2010	TQ Delta, LLC
9	US 7,978,706 B2	7/12/2011	TQ Delta, LLC
10	US 8,422,511 B2	4/16/2013	TQ Delta, LLC
11	US 7,889,784 B2	2/15/2011	TQ Delta, LLC
12	US 7,835,430 B2	11/16/2010	TQ Delta, LLC
13	US 7,570,686 B2	8/4/2009	TQ Delta, LLC
14	US 8,238,412 B2	8/7/2012	TQ Delta, LLC
15	US 8,432,956 B2	4/30/2013	TQ Delta, LLC
16	US 7,451,379 B2	11/11/2008	TQ Delta, LLC
17	US 8,516,337 B2	8/20/2013	TQ Delta, LLC
18	US 7,979,778 B2	7/12/2011	TQ Delta, LLC
19	US 7,925,958 B2	4/12/2011	TQ Delta, LLC
20	US 8,462,835 B2	6/11/2013	TQ Delta, LLC
21	US 8,594,162 B2	11/26/2013	TQ Delta, LLC
22	US 7,978,753 B2	7/12/2011	TQ Delta, LLC
23	US 6,445,730 B1	9/3/2002	TQ Delta, LLC
24	US 8,611,404 B2	12/17/2013	TQ Delta, LLC
25	US 8,437,382 B2	5/7/2013	TQ Delta, LLC
26	US 7,836,381 B1	11/16/2010	TQ Delta, LLC
27	US 7,844,882 B2	11/30/2010	TQ Delta, LLC
28	US 8,276,048 B2	9/25/2012	TQ Delta, LLC
29	US 8,495,473 B2	7/23/2013	TQ Delta, LLC
30	US 8,607,126 B1	12/10/2013	TQ Delta, LLC
31	US 7,831,890 B2	11/9/2010	TQ Delta, LLC
32	US 8,625,660 B2	1/7/2014	TQ Delta, LLC

Birch, Melvin (Akima)

From:	ded_nefreply@ded.uscourts.gov
Sent:	Wednesday, November 20, 2013 4:56 PM
To:	ded_ecf@ded.uscourts.gov
Subject:	Activity in Case 1:13-cv-01835-RGA TQ Delta LLC v. Pace Americas Inc. Patent/Trademark Report to Commissioner

This is an automatic e-mail message generated by the CM/ECF system. Please DO NOT RESPOND to this e-mail because the mail box is unattended.
*****NOTE TO PUBLIC ACCESS USERS*** Judicial Conference of the United States policy permits attorneys of record and parties in a case (including pro se litigants) to receive one free electronic copy of all documents filed electronically, if receipt is required by law or directed by the filer. PACER access fees apply to all other users. To avoid later charges, download a copy of each document during this first viewing. However, if the referenced document is a transcript, the free copy and 30 page limit do not apply.**

U.S. District Court

District of Delaware

Notice of Electronic Filing

The following transaction was entered by Farnan, Brian on 11/20/2013 at 4:56 PM EST and filed on 11/20/2013

Case Name: TQ Delta LLC v. Pace Americas Inc.
Case Number: 1:13-cv-01835-RGA
Filer:
Document Number: 7

Docket Text:
Report to the Commissioner of Patents and Trademarks for Patent/Trademark Number(s) US 8,090,008 B2; US 8,073,041 B1; US 7,292,627 B2; US 7,471,721 B2; US 8,218,610 B2; US 8,355,427 B2; US 7,453,881 B2; US 7,978,706 B2; US 8,422,511 B2; US 7,889,784 B2; US 7,835,430 B2; US 7,570,686 B2; US 8,238,412 B2; US 8,432,956 B2; US 7,451,379 B2; US 8,516,337 B2; US 7,979,778 B2; US 7,925,958 B2; US 8,462,835 B2; US 7,836,381 B1; US 7,844,882 B2; US 8,276,048 B2; US 8,495,473 B2; US 7,831,890 B2; . (Farnan, Brian)

1:13-cv-01835-RGA Notice has been electronically mailed to:

Brian E. Farnan bfarnan@farnanlaw.com, tfarnan@farnanlaw.com

Michael J. Farnan mfarnan@farnanlaw.com, tfarnan@farnanlaw.com

1:13-cv-01835-RGA Filer will deliver document by other means to:

The following document(s) are associated with this transaction:

From: ded_nefreply@ded.uscourts.gov
Sent: Wednesday, November 20, 2013 5:07 PM
To: ded_ecf@ded.uscourts.gov
Subject: Activity in Case 1:13-cv-01836-RGA TQ Delta LLC v. Zhone Technologies Inc. Patent/Trademark Report to Commissioner

This is an automatic e-mail message generated by the CM/ECF system. Please DO NOT RESPOND to this e-mail because the mail box is unattended.
*****NOTE TO PUBLIC ACCESS USERS*** Judicial Conference of the United States policy permits attorneys of record and parties in a case (including pro se litigants) to receive one free electronic copy of all documents filed electronically, if receipt is required by law or directed by the filer. PACER access fees apply to all other users. To avoid later charges, download a copy of each document during this first viewing. However, if the referenced document is a transcript, the free copy and 30 page limit do not apply.**

U.S. District Court

District of Delaware

Notice of Electronic Filing

The following transaction was entered by Farnan, Brian on 11/20/2013 at 5:07 PM EST and filed on 11/20/2013
Case Name: TQ Delta LLC v. Zhone Technologies Inc.
Case Number: 1:13-cv-01836-RGA
Filer:
Document Number: 7

Docket Text:
Report to the Commissioner of Patents and Trademarks for Patent/Trademark Number(s) US 8,090,008 B2; US 8,073,041 B1; US 7,292,627 B2; US 7,471,721 B2; US 8,218,610 B2; US 8,355,427 B2; US 7,453,881 B2; US 7,809,028 B2; US 7,978,706 B2; US 8,422,511 B2; US 7,796,705 B2; US 7,889,784 B2; US 7,835,430 B2; US 7,570,686 B2; US 8,238,412 B2; US 8,432,956 B2; US 7,451,379 B2; US 8,516,337 B2; US 7,979,778 B2; US 7,925,958 B2; US 8,462,835 B2; US 7,978,753 B2; US 6,445,730 B1; US 8,437,382 B2; US 7,836,381 B1; US 7,844,882 B2; US 8,276,048 B2; US 8,495,473 B2; US 7,831,890 B2; US 8,335,956 B2; US 8,468,411 B2; US 8,407,546 B2 . (Farnan, Brian)

1:13-cv-01836-RGA Notice has been electronically mailed to:

Brian E. Farnan bfarnan@farnanlaw.com, tfarnan@farnanlaw.com

Michael J. Farnan mfarnan@farnanlaw.com, tfarnan@farnanlaw.com

1:13-cv-01836-RGA Filer will deliver document by other means to:

AO 120 (Rev. 08/10)

TO:	REPORT ON THE FILING OR DETERMINATION OF AN ACTION REGARDING A PATENT OR TRADEMARK
Mail Stop 8 Director of the U.S. Patent and Trademark Office P.O. Box 1450 Alexandria, VA 22313-1450	

In Compliance with 35 U.S.C. § 290 and/or 15 U.S.C. § 1116 you are hereby advised that a court action has been filed in the U.S. District Court District of Delaware on the following

☐ Trademarks or ☑ Patents. (☐ the patent action involves 35 U.S.C. § 292.):

DOCKET NO.	DATE FILED	U.S. DISTRICT COURT
	12/9/2013	District of Delaware

PLAINTIFF	DEFENDANT
TQ Delta, LLC	ZyXEL Communications Corporation and ZyXEL Communications, Inc.

	PATENT OR TRADEMARK NO.	DATE OF PATENT OR TRADEMARK	HOLDER OF PATENT OR TRADEMARK
1	See Attached		
2			
3			
4			
5			

In the above—entitled case, the following patent(s)/ trademark(s) have been included:

DATE INCLUDED	INCLUDED BY ☐ Amendment ☐ Answer ☐ Cross Bill ☐ Other Pleading	
PATENT OR TRADEMARK NO.	DATE OF PATENT OR TRADEMARK	HOLDER OF PATENT OR TRADEMARK
1		
2		
3		
4		
5		

In the above—entitled case, the following decision has been rendered or judgement issued:

DECISION/JUDGEMENT

CLERK	(BY) DEPUTY CLERK	DATE

Copy 1—Upon initiation of action, mail this copy to Director Copy 3—Upon termination of action, mail this copy to Director
Copy 2—Upon filing document adding patent(s), mail this copy to Director Copy 4—Case file copy

	PATENT OR TRADEMARK NO.	DATE OF PATENT OR TRADEMARK	HOLDER OF PATENT OR TRADEMARK
1	US 8,090,008 B2	1/3/2012	TQ Delta, LLC
2	US 8,073,041 B1	12/6/2011	TQ Delta, LLC
3	US 7,292,627 B2	11/6/2007	TQ Delta, LLC
4	US 7,471,721 B2	12/30/2008	TQ Delta, LLC
5	US 8,218,610 B2	7/10/2012	TQ Delta, LLC
6.	US 8,355,427 B2	1/15/2013	TQ Delta, LLC
7	US 7,453,881 B2	11/18/2008	TQ Delta, LLC
8	US 7,809,028 B2	10/5/2010	TQ Delta, LLC
9	US 7,978,706 B2	7/12/2011	TQ Delta, LLC
10	US 8,422,511 B2	4/16/2013	TQ Delta, LLC
11	US 7,796,705 B2	9/14/2010	TQ Delta, LLC
12	US 7,889,784 B2	2/15/2011	TQ Delta, LLC
13	US 7,835,430 B2	11/16/2010	TQ Delta, LLC
14	US 7,570,686 B2	8/4/2009	TQ Delta, LLC
15	US 8,238,412 B2	8/7/2012	TQ Delta, LLC
16	US 8,432,956 B2	4/30/2013	TQ Delta, LLC
17	US 7,451,379 B2	11/11/2008	TQ Delta, LLC
18	US 8,516,337 B2	8/20/2013	TQ Delta, LLC
19	US 7,979,778 B2	7/12/2011	TQ Delta, LLC
20	US 7,925,958 B2	4/12/2011	TQ Delta, LLC
21	US 8,462,835 B2	6/11/2013	TQ Delta, LLC
22	US 7,978,753 B2	7/12/2011	TQ Delta, LLC
23	US 6,445,730 B1	9/3/2002	TQ Delta, LLC
24	US 8,437,382 B2	5/7/2013	TQ Delta, LLC
25	US 7,836,381 B1	11/16/2010	TQ Delta, LLC
26	US 7,844,882 B2	11/30/2010	TQ Delta, LLC
27	US 8,276,048 B2	9/25/2012	TQ Delta, LLC
28	US 8,495,473 B2	7/23/2013	TQ Delta, LLC
29	US 7,831,890 B2	11/9/2010	TQ Delta, LLC
30	US 8,335,956 B2	12/18/2012	TQ Delta, LLC
31	US 8,468,411 B2	6/18/2013	TQ Delta, LLC
32	US 8,407,546 B2	3/26/2013	TQ Delta, LLC

AO 120 (Rev. 08/10)

TO:	REPORT ON THE FILING OR DETERMINATION OF AN ACTION REGARDING A PATENT OR TRADEMARK
Mail Stop 8 Director of the U.S. Patent and Trademark Office P.O. Box 1450 Alexandria, VA 22313-1450	

In Compliance with 35 U.S.C. § 290 and/or 15 U.S.C. § 1116 you are hereby advised that a court action has been filed in the U.S. District Court Northern District of Texas, Dallas Division on the following

☑ Trademarks or ☐ Patents. (☐ the patent action involves 35 U.S.C. § 292.):

DOCKET NO.	DATE FILED	U.S. DISTRICT COURT
3:12-cv-1462-L	5/10/2012	Northern District of Texas, Dallas Division

PLAINTIFF	DEFENDANT
Boulle Ltd	De Boulle Diamond & Jewelry Inc

	PATENT OR TRADEMARK NO.	DATE OF PATENT OR TRADEMARK	HOLDER OF PATENT OR TRADEMARK
1	4,086,050	1/17/2012	Boulle Ltd
2			
3			
4			
5			

In the above—entitled case, the following patent(s)/ trademark(s) have been included:

DATE INCLUDED	INCLUDED BY ☑ Amendment ☐ Answer ☐ Cross Bill ☐ Other Pleading	
12/9/2013		
PATENT OR TRADEMARK NO.	DATE OF PATENT OR TRADEMARK	HOLDER OF PATENT OR TRADEMARK
1 3,078,625	4/11/2006	De Boulle Diamond & Jewelry Inc
2 3,078,627	4/11/2006	De Boulle Diamond & Jewelry Inc
3		
4		
5		

In the above—entitled case, the following decision has been rendered or judgement issued:

DECISION/JUDGEMENT

CLERK	(BY) DEPUTY CLERK	DATE
Karen Mitchell	s/A. Lowe-Monserrate	12/10/2013

Copy 1—Upon initiation of action, mail this copy to Director **Copy 3—Upon termination of action, mail this copy to Director**
Copy 2—Upon filing document adding patent(s), mail this copy to Director **Copy 4—Case file copy**

AO 120 (Rev. 08/10)

TO:	REPORT ON THE FILING OR DETERMINATION OF AN ACTION REGARDING A PATENT OR TRADEMARK
Mail Stop 8 Director of the U.S. Patent and Trademark Office P.O. Box 1450 Alexandria, VA 22313-1450	

In Compliance with 35 U.S.C. § 290 and/or 15 U.S.C. § 1116 you are hereby advised that a court action has been filed in the U.S. District Court District of Delaware on the following

☐ Trademarks or ☑ Patents. (☐ the patent action involves 35 U.S.C. § 292.):

DOCKET NO.	DATE FILED	U.S. DISTRICT COURT
	11/4/2013	District of Delaware

PLAINTIFF	DEFENDANT
TQ Delta, LLC	Pace Americas, Inc.

PATENT OR TRADEMARK NO.	DATE OF PATENT OR TRADEMARK	HOLDER OF PATENT OR TRADEMARK
1 See Attached		
2		
3		
4		
5		

In the above—entitled case, the following patent(s)/ trademark(s) have been included:

DATE INCLUDED	INCLUDED BY ☐ Amendment ☐ Answer ☐ Cross Bill ☐ Other Pleading	
PATENT OR TRADEMARK NO.	DATE OF PATENT OR TRADEMARK	HOLDER OF PATENT OR TRADEMARK
1		
2		
3		
4		
5		

In the above—entitled case, the following decision has been rendered or judgement issued:

DECISION/JUDGEMENT

CLERK	(BY) DEPUTY CLERK	DATE

Copy 1—Upon initiation of action, mail this copy to Director Copy 3—Upon termination of action, mail this copy to Director
Copy 2—Upon filing document adding patent(s), mail this copy to Director Copy 4—Case file copy

	PATENT OR TRADEMARK NO.	DATE OF PATENT OR TRADEMARK	HOLDER OF PATENT OR TRADEMARK
1	US 8,090,008 B2	1/3/2012	TQ Delta, LLC
2	US 8,073,041 B1	12/6/2011	TQ Delta, LLC
3	US 7,292,627 B2	11/6/2007	TQ Delta, LLC
4	US 7,471,721 B2	12/30/2008	TQ Delta, LLC
5	US 8,218,610 B2	7/10/2012	TQ Delta, LLC
6.	US 8,355,427 B2	1/15/2013	TQ Delta, LLC
7	US 7,453,881 B2	11/18/2008	TQ Delta, LLC
8	US 7,978,706 B2	7/12/2011	TQ Delta, LLC
9	US 8,422,511 B2	4/16/2013	TQ Delta, LLC
10	US 7,889,784 B2	2/15/2011	TQ Delta, LLC
11	US 7,835,430 B2	11/16/2010	TQ Delta, LLC
12	US 7,570,686 B2	8/4/2009	TQ Delta, LLC
13	US 8,238,412 B2	8/7/2012	TQ Delta, LLC
14	US 8,432,956 B2	4/30/2013	TQ Delta, LLC
15	US 7,451,379 B2	11/11/2008	TQ Delta, LLC
16	US 8,516,337 B2	8/20/2013	TQ Delta, LLC
17	US 7,979,778 B2	7/12/2011	TQ Delta, LLC
18	US 7,925,958 B2	4/12/2011	TQ Delta, LLC
19	US 8,462,835 B2	6/11/2013	TQ Delta, LLC

AO 120 (Rev. 08/10)

TO:	REPORT ON THE FILING OR DETERMINATION OF AN ACTION REGARDING A PATENT OR TRADEMARK
Mail Stop 8 **Director of the U.S. Patent and Trademark Office** **P.O. Box 1450** **Alexandria, VA 22313-1450**	

In Compliance with 35 U.S.C. § 290 and/or 15 U.S.C. § 1116 you are hereby advised that a court action has been filed in the U.S. District Court District of Delaware on the following

☐ Trademarks or ☑ Patents. (☐ the patent action involves 35 U.S.C. § 292.):

DOCKET NO.	DATE FILED	U.S. DISTRICT COURT
	11/4/2013	District of Delaware

PLAINTIFF	DEFENDANT
TQ Delta, LLC	Zhone Technologies, Inc.

PATENT OR TRADEMARK NO.	DATE OF PATENT OR TRADEMARK	HOLDER OF PATENT OR TRADEMARK
1 See Attached		
2		
3		
4		
5		

In the above—entitled case, the following patent(s)/ trademark(s) have been included:

DATE INCLUDED	INCLUDED BY ☐ Amendment ☐ Answer ☐ Cross Bill ☐ Other Pleading	
PATENT OR TRADEMARK NO.	DATE OF PATENT OR TRADEMARK	HOLDER OF PATENT OR TRADEMARK
1		
2		
3		
4		
5		

In the above—entitled case, the following decision has been rendered or judgement issued:

DECISION/JUDGEMENT

CLERK	(BY) DEPUTY CLERK	DATE

Copy 1—Upon initiation of action, mail this copy to Director **Copy 3—Upon termination of action, mail this copy to Director**
Copy 2—Upon filing document adding patent(s), mail this copy to Director **Copy 4—Case file copy**

	PATENT OR TRADEMARK NO.	DATE OF PATENT OR TRADEMARK	HOLDER OF PATENT OR TRADEMARK
1	US 8,090,008 B2	1/3/2012	TQ Delta, LLC
2	US 8,073,041 B1	12/6/2011	TQ Delta, LLC
3	US 7,292,627 B2	11/6/2007	TQ Delta, LLC
4	US 7,471,721 B2	12/30/2008	TQ Delta, LLC
5	US 8,218,610 B2	7/10/2012	TQ Delta, LLC
6.	US 8,355,427 B2	1/15/2013	TQ Delta, LLC
7	US 7,453,881 B2	11/18/2008	TQ Delta, LLC
8	US 7,809,028 B2	10/5/2010	TQ Delta, LLC
9	US 7,978,706 B2	7/12/2011	TQ Delta, LLC
10	US 8,422,511 B2	4/16/2013	TQ Delta, LLC
11	US 7,796,705 B2	9/14/2010	TQ Delta, LLC
12	US 7,889,784 B2	2/15/2011	TQ Delta, LLC
13	US 7,835,430 B2	11/16/2010	TQ Delta, LLC
14	US 7,570,686 B2	8/4/2009	TQ Delta, LLC
15	US 8,238,412 B2	8/7/2012	TQ Delta, LLC
16	US 8,432,956 B2	4/30/2013	TQ Delta, LLC
17	US 7,451,379 B2	11/11/2008	TQ Delta, LLC
18	US 8,516,337 B2	8/20/2013	TQ Delta, LLC
19	US 7,979,778 B2	7/12/2011	TQ Delta, LLC
20	US 7,925,958 B2	4/12/2011	TQ Delta, LLC
21	US 8,462,835 B2	6/11/2013	TQ Delta, LLC
22	US 7,978,753 B2	7/12/2011	TQ Delta, LLC
23	US 6,445,730 B1	9/3/2002	TQ Delta, LLC
24	US 8,437,382 B2	5/7/2013	TQ Delta, LLC

IN THE UNITED STATES PATENT AND TRADEMARK OFFICE

In Re the Application of: Marcos C. Tzannes	)	Patent No.: 8,355,427
Application No.: 13/439,605	)	Issued: January 15, 2013
Filed: April 4, 2012	)	Examiner: JOSEPH, Jaison
Atty. File No.: 6936-47-CON-DIV-CON-2	)	Confirmation No.: 4069

For: SYSTEM AND METHOD FOR DESCRAMBLING THE PHASE OF CARRIERS IN A MULTICARRIER COMMUNICATIONS SYSTEM

NOTIFICATION OF LOSS OF ENTITLEMENT OF SMALL ENTITY STATUS UNDER 37 CFR §§ 1.27 (g)(2) and 1.28(c)

Commissioner for Patents
P.O. Box 1450
Alexandria, VA 22313-1450

Madam:

On October 30, 2012, Applicants filed an Assertion of Entitlement to Small Entity Status in the referenced application. Applicants filed the Assertion in good faith, and paid the fees associated with the application as a small entity in good faith. It was later discovered that the Applicant should not have been entitled to small entity status and the Assertion was established in error.

Pursuant to 37 CFR §§ 1.27(g)(2) and 1.28(c), Applicants are informing the Office that the referenced application is no longer entitled to Small Entity Status.

Furthermore, pursuant to 37 C.F.R. §1.28(c)(1)(2), on October 30, 2012, Applicants submitted payment of $1185 at the small entity rate for the following:

- Utility Appl Issue Fee – $885
- Publication Fee – $300

The current fees for the referenced payments are listed below for a total of $2080:

- Utility Appl Issue Fee – $1780
- Publication Fee – $300

Therefore, the Commissioner is hereby authorized to charge to deposit account number 19-1970 **$895.00** for the deficiency owed.

The Commissioner is also hereby authorized to charge to deposit account number 19-1970 any fees under 37 CFR § 1.16 and 1.17 that may be required by this paper and to credit any overpayment to that Account.

Respectfully submitted,
SHERIDAN ROSS P.C.

Date: March 25, 2013

By: /Jason H. Vick/
Jason H. Vick
Reg. No. 45,285
1560 Broadway, Suite 1200
Denver, Colorado 80202
Telephone: 303-863-9700

Electronic Acknowledgement Receipt	
EFS ID:	15345553
Application Number:	13439605
International Application Number:	
Confirmation Number:	4069
Title of Invention:	SYSTEM AND METHOD FOR DESCRAMBLING THE PHASE OF CARRIERS IN A MULTICARRIER COMMUNICATIONS SYSTEM
First Named Inventor/Applicant Name:	Marcos C. Tzannes
Customer Number:	62574
Filer:	Jason Vick/Joanne Vos
Filer Authorized By:	Jason Vick
Attorney Docket Number:	6936-47-CON-DIV-CON-2
Receipt Date:	25-MAR-2013
Filing Date:	04-APR-2012
Time Stamp:	16:05:02
Application Type:	Utility under 35 USC 111(a)

Payment information:

Submitted with Payment	no

File Listing:

Document Number	Document Description	File Name	File Size(Bytes)/ Message Digest	Multi Part /.zip	Pages (if appl.)
1	Notification of loss of entitlement to small entity status	Loss_of_Entitlement_of_Small_Entity_Status.pdf	86504 808899076d1cfebd39448e9a5fe404f53dafc6a4	no	2

Warnings:
Information:

Total Files Size (in bytes):	86504

This Acknowledgement Receipt evidences receipt on the noted date by the USPTO of the indicated documents, characterized by the applicant, and including page counts, where applicable. It serves as evidence of receipt similar to a Post Card, as described in MPEP 503.

New Applications Under 35 U.S.C. 111
If a new application is being filed and the application includes the necessary components for a filing date (see 37 CFR 1.53(b)-(d) and MPEP 506), a Filing Receipt (37 CFR 1.54) will be issued in due course and the date shown on this Acknowledgement Receipt will establish the filing date of the application.

National Stage of an International Application under 35 U.S.C. 371
If a timely submission to enter the national stage of an international application is compliant with the conditions of 35 U.S.C. 371 and other applicable requirements a Form PCT/DO/EO/903 indicating acceptance of the application as a national stage submission under 35 U.S.C. 371 will be issued in addition to the Filing Receipt, in due course.

New International Application Filed with the USPTO as a Receiving Office
If a new international application is being filed and the international application includes the necessary components for an international filing date (see PCT Article 11 and MPEP 1810), a Notification of the International Application Number and of the International Filing Date (Form PCT/RO/105) will be issued in due course, subject to prescriptions concerning national security, and the date shown on this Acknowledgement Receipt will establish the international filing date of the application.

UNITED STATES PATENT AND TRADEMARK OFFICE

UNITED STATES DEPARTMENT OF COMMERCE
United States Patent and Trademark Office
Address: COMMISSIONER FOR PATENTS
P.O. Box 1450
Alexandria, Virginia 22313-1450
www.uspto.gov

APPLICATION NO.	ISSUE DATE	PATENT NO.	ATTORNEY DOCKET NO.	CONFIRMATION NO.
13/439,605	01/15/2013	8355427	6936-47-CON-DIV-CON-2	4069

62574 7590 12/22/2012

Jason H. Vick
Sheridan Ross, PC
Suite # 1200
1560 Broadway
Denver, CO 80202

ISSUE NOTIFICATION

The projected patent number and issue date are specified above.

Determination of Patent Term Adjustment under 35 U.S.C. 154 (b)
(application filed on or after May 29, 2000)

The Patent Term Adjustment is 0 day(s). Any patent to issue from the above-identified application will include an indication of the adjustment on the front page.

If a Continued Prosecution Application (CPA) was filed in the above-identified application, the filing date that determines Patent Term Adjustment is the filing date of the most recent CPA.

Applicant will be able to obtain more detailed information by accessing the Patent Application Information Retrieval (PAIR) WEB site (http://pair.uspto.gov).

Any questions regarding the Patent Term Extension or Adjustment determination should be directed to the Office of Patent Legal Administration at (571)-272-7702. Questions relating to issue and publication fee payments should be directed to the Application Assistance Unit (AAU) of the Office of Data Management (ODM) at (571)-272-4200.

APPLICANT(s) (Please see PAIR WEB site http://pair.uspto.gov for additional applicants):

Marcos C. Tzannes, Orinda, CA;

The United States represents the largest, most dynamic marketplace in the world and is an unparalleled location for business investment, innovation, and commercialization of new technologies. The USA offers tremendous resources and advantages for those who invest and manufacture goods here. Through SelectUSA, our nation works to encourage and facilitate business investment. To learn more about why the USA is the best country in the world to develop technology, manufacture products, and grow your business, visit SelectUSA.gov.

OK TO ENTER: /JJ/ /JJ/ 12/08/2012

IN THE UNITED STATES PATENT AND TRADEMARK OFFICE

In Re the Application of: Marcos C. Tzannes	Group Art Unit: 2634
Application No.: 13/439,605	Examiner: WILLIAMS, Lawrence B.
Filed: April 4, 2012	Confirmation No.: 4069
Atty. File No.: 6936-47-CON-DIV-CON-2	

For: SYSTEM AND METHOD FOR DESCRAMBLING THE PHASE OF CARRIERS IN A MULTICARRIER COMMUNICATIONS SYSTEM

Commissioner for Patents
P.O. Box 1450
Alexandria, VA 22313

AMENDMENT AFTER ALLOWANCE UNDER 37 C.F.R. 1.312

Commissioner for Patents
P.O. Box 1450
Alexandria, VA 22313-1450

Madam:

Applicants submit this Amendment After Allowance pursuant to 37 C.F.R. 1.312 in response to the Notice of Allowance having a mailing date of September 14, 2012. While Applicants believe that no fees are due with the filing of this response, the undersigned hereby authorizes the charge of any fees deemed necessary to Deposit Account No. 19-1970.

An amendment may be entered after the mailing of a Notice of Allowance but prior to payment of the issue fee upon recommendation of the primary Examiner. Therefore, it is respectfully requested that the above-referenced application be amended as follows:

Amendments to the Specification begin on page 2 of this paper.

Remarks begin on page 3 of this paper.

DISH
Exhibit 1003 Page 22

UNITED STATES PATENT AND TRADEMARK OFFICE

UNITED STATES DEPARTMENT OF COMMERCE
United States Patent and Trademark Office
Address: COMMISSIONER FOR PATENTS
P.O. Box 1450
Alexandria, Virginia 22313-1450
www.uspto.gov

APPLICATION NO.	FILING DATE	FIRST NAMED INVENTOR	ATTORNEY DOCKET NO.	CONFIRMATION NO.
13/439,605	04/04/2012	Marcos C. Tzannes	6936-47-CON-DIV-CON-2	4069

62574 7590 12/13/2012

Jason H. Vick
Sheridan Ross, PC
Suite # 1200
1560 Broadway
Denver, CO 80202

EXAMINER	
JOSEPH, JAISON	
ART UNIT	PAPER NUMBER
2633	

NOTIFICATION DATE	DELIVERY MODE
12/13/2012	ELECTRONIC

Please find below and/or attached an Office communication concerning this application or proceeding.

The time period for reply, if any, is set in the attached communication.

Notice of the Office communication was sent electronically on above-indicated "Notification Date" to the following e-mail address(es):

jvick@sheridanross.com

Response to Rule 312 Communication	Application No.	Applicant(s)
	13/439,605	TZANNES, MARCOS C.
	Examiner	Art Unit
	JAISON JOSEPH	2633

-- The MAILING DATE of this communication appears on the cover sheet with the correspondence address –

1. ☒ The amendment filed on *30 October 2012* under 37 CFR 1.312 has been considered, and has been:

   a) ☒ entered.

   b) ☐ entered as directed to matters of form not affecting the scope of the invention.

   c) ☐ disapproved because the amendment was filed after the payment of the issue fee.
   Any amendment filed after the date the issue fee is paid must be accompanied by a petition under 37 CFR 1.313(c)(1) and the required fee to withdraw the application from issue.

   d) ☐ disapproved. See explanation below.

   e) ☐ entered in part. See explanation below.

/Jaison Joseph/
Primary Examiner, Art Unit 2633

UNITED STATES PATENT AND TRADEMARK OFFICE

UNITED STATES DEPARTMENT OF COMMERCE
United States Patent and Trademark Office
Address: COMMISSIONER FOR PATENTS
P.O. Box 1450
Alexandria, Virginia 22313-1450
www.uspto.gov

APPLICATION NUMBER	FILING OR 371(C) DATE	FIRST NAMED APPLICANT	ATTY. DOCKET NO./TITLE
13/439,605	04/04/2012	Marcos C. Tzannes	6936-47-CON-DIV-CON-2

CONFIRMATION NO. 4069

POA ACCEPTANCE LETTER

62574
Jason H. Vick
Sheridan Ross, PC
Suite # 1200
1560 Broadway
Denver, CO 80202

OC000000057455941

Date Mailed: 11/06/2012

NOTICE OF ACCEPTANCE OF POWER OF ATTORNEY

This is in response to the Power of Attorney filed 10/30/2012.

The Power of Attorney in this application is accepted. Correspondence in this application will be mailed to the above address as provided by 37 CFR 1.33.

/lhill/

Office of Data Management, Application Assistance Unit (571) 272-4000, or (571) 272-4200, or 1-888-786-0101

PART B - FEE(S) TRANSMITTAL

Complete and send this form, together with applicable fee(s), to: Mail **Mail Stop ISSUE FEE**
Commissioner for Patents
P.O. Box 1450
Alexandria, Virginia 22313-1450
or Fax (571)-273-2885

INSTRUCTIONS: This form should be used for transmitting the ISSUE FEE and PUBLICATION FEE (if required). Blocks 1 through 5 should be completed where appropriate. All further correspondence including the Patent, advance orders and notification of maintenance fees will be mailed to the current correspondence address as indicated unless corrected below or directed otherwise in Block 1, by (a) specifying a new correspondence address; and/or (b) indicating a separate "FEE ADDRESS" for maintenance fee notifications.

CURRENT CORRESPONDENCE ADDRESS (Note: Use Block 1 for any change of address)

62574 7590 09/14/2012
Jason H. Vick
Sheridan Ross, PC
Suite # 1200
1560 Broadway
Denver, CO 80202

Note: A certificate of mailing can only be used for domestic mailings of the Fee(s) Transmittal. This certificate cannot be used for any other accompanying papers. Each additional paper, such as an assignment or formal drawing, must have its own certificate of mailing or transmission.

Certificate of Mailing or Transmission
I hereby certify that this Fee(s) Transmittal is being deposited with the United States Postal Service with sufficient postage for first class mail in an envelope addressed to the Mail Stop ISSUE FEE address above, or being facsimile transmitted to the USPTO (571) 273-2885, on the date indicated below.

(Depositor's name)
(Signature)
(Date)

APPLICATION NO.	FILING DATE	FIRST NAMED INVENTOR	ATTORNEY DOCKET NO.	CONFIRMATION NO.
13/439,605	04/04/2012	Marcos C. Tzannes	5550-47-CON-DIV-CON-2	4069

TITLE OF INVENTION: SYSTEM AND METHOD FOR DESCRAMBLING THE PHASE OF CARRIERS IN A MULTICARRIER COMMUNICATIONS SYSTEM

APPLN. TYPE	SMALL ENTITY	ISSUE FEE DUE	PUBLICATION FEE DUE	PREV. PAID ISSUE FEE	TOTAL FEE(S) DUE	DATE DUE
nonprovisional	NO	$1740	$300	$0	$2040	12/14/2012

EXAMINER	ART UNIT	CLASS-SUBCLASS
WILLIAMS, LAWRENCE B	2611	375-222000

1. Change of correspondence address or indication of "Fee Address" (37 CFR 1.363).
☐ Change of correspondence address (or Change of Correspondence Address form PTO/SB/122) attached.
☐ "Fee Address" indication (or "Fee Address" Indication form PTO/SB/47; Rev 03-02 or more recent) attached. **Use of a Customer Number is required.**

2. For printing on the patent front page, list
(1) the names of up to 3 registered patent attorneys or agents OR, alternatively,
(2) the name of a single firm (having as a member a registered attorney or agent) and the names of up to 2 registered patent attorneys or agents. If no name is listed, no name will be printed.

1 Jason H. Vick
2 Sheridan Ross, PC
3

3. ASSIGNEE NAME AND RESIDENCE DATA TO BE PRINTED ON THE PATENT (print or type)

PLEASE NOTE: Unless an assignee is identified below, no assignee data will appear on the patent. If an assignee is identified below, the document has been filed for recordation as set forth in 37 CFR 3.11. Completion of this form is NOT a substitute for filing an assignment.

(A) NAME OF ASSIGNEE: TQ DELTA, LLC

(B) RESIDENCE: (CITY and STATE OR COUNTRY): AUSTIN, TX

Please check the appropriate assignee category or categories (will not be printed on the patent) : ☐ Individual ☑ Corporation or other private group entity ☐ Government

4a. The following fee(s) are submitted:
☑ Issue Fee
☑ Publication Fee (No small entity discount permitted)
☐ Advance Order - # of Copies _____

4b. Payment of Fee(s): **(Please first reapply any previously paid issue fee shown above)**
☐ A check is enclosed.
☐ Payment by credit card. Form PTO-2038 is attached.
☑ The Director is hereby authorized to charge the required fee(s), any deficiency, or credit any overpayment, to Deposit Account Number 19-1970 (enclose an extra copy of this form).

5. **Change in Entity Status** (from status indicated above)
☑ a. Applicant claims SMALL ENTITY status. See 37 CFR 1.27.
☐ b. Applicant is no longer claiming SMALL ENTITY status. See 37 CFR 1.27(g)(2).

NOTE: The Issue Fee and Publication Fee (if required) will not be accepted from anyone other than the applicant; a registered attorney or agent; or the assignee or other party in interest as shown by the records of the United States Patent and Trademark Office.

Authorized Signature _____ Date 30 Oct 12

Typed or printed name Jason H. Vick Registration No. 45,285

This collection of information is required by 37 CFR 1.311. The information is required to obtain or retain a benefit by the public which is to file (and by the USPTO to process) an application. Confidentiality is governed by 35 U.S.C. 122 and 37 CFR 1.14. This collection is estimated to take 12 minutes to complete, including gathering, preparing, and submitting the completed application form to the USPTO. Time will vary depending upon the individual case. Any comments on the amount of time you require to complete this form and/or suggestions for reducing this burden, should be sent to the Chief Information Officer, U.S. Patent and Trademark Office, U.S. Department of Commerce, P.O. Box 1450, Alexandria, Virginia 22313-1450. DO NOT SEND FEES OR COMPLETED FORMS TO THIS ADDRESS. SEND TO: Commissioner for Patents, P.O. Box 1450, Alexandria, Virginia 22313-1450.

Under the Paperwork Reduction Act of 1995, no persons are required to respond to a collection of information unless it displays a valid OMB control number.

IN THE UNITED STATES PATENT AND TRADEMARK OFFICE

In Re the Application of: Marcos C. Tzannes	Group Art Unit: 2634
Application No.: 13/439,605	Examiner: WILLIAMS, Lawrence B.
Filed: April 4, 2012	Confirmation No.: 4069
Atty. File No.: 6936-47-CON-DIV-CON-2	

For: System And Method For Descrambling The Phase Of Carriers In A Multicarrier Communications System

ASSERTION OF ENTITLEMENT TO SMALL ENTITY STATUS

Commissioner for Patents
P.O. Box 1450
Alexandria, VA 22313-1450

Madam:

In accordance with MPEP §§ 509.02 and 509.03 and 37 CFR 1.27, this document is being filed to inform the U.S. Patent Office of the change of status for the above-identified patent application from large entity status to small entity status. All fees paid to date have been paid as large entity status. No fees have yet been paid as small entity status. Due to the sale of the referenced application, the Applicant is now entitled to small entity status.

We respectfully request that small entity status be granted for the above-referenced patent application.

Please contact the undersigned if there are any questions regarding this notification.

Respectfully submitted,

SHERIDAN ROSS P.C.

Date: 30 Oct 13

By: _____
Jason H. Vick, Reg. No. 45,285
1560 Broadway, Suite 1200
Denver, Colorado 80202
Telephone: 303-863-9700

DISH
Exhibit 1003 Page 27

IN THE UNITED STATES PATENT AND TRADEMARK OFFICE

In Re the Application of: Marcos C. Tzannes	Group Art Unit: 2634
Application No.: 13/439,605	Examiner: WILLIAMS, Lawrence B.
Filed: April 4, 2012	Confirmation No.: 4069
Atty. File No.: 6936-47-CON-DIV-CON-2	

For: SYSTEM AND METHOD FOR DESCRAMBLING THE PHASE OF CARRIERS IN A MULTICARRIER COMMUNICATIONS SYSTEM

Commissioner for Patents
P.O. Box 1450
Alexandria, VA 22313

AMENDMENT AFTER ALLOWANCE UNDER 37 C.F.R. 1.312

Commissioner for Patents
P.O. Box 1450
Alexandria, VA 22313-1450

Madam:

Applicants submit this Amendment After Allowance pursuant to 37 C.F.R. 1.312 in response to the Notice of Allowance having a mailing date of September 14, 2012. While Applicants believe that no fees are due with the filing of this response, the undersigned hereby authorizes the charge of any fees deemed necessary to Deposit Account No. 19-1970.

An amendment may be entered after the mailing of a Notice of Allowance but prior to payment of the issue fee upon recommendation of the primary Examiner. Therefore, it is respectfully requested that the above-referenced application be amended as follows:

Amendments to the Specification begin on page 2 of this paper.

Remarks begin on page 3 of this paper.

DISH
Exhibit 1003 Page 28

AMENDMENTS TO THE SPECIFICATION

Please replace the first paragraph on page 1 immediately following the title with the following:

Related Application

This application is a continuation of U.S. Application No. 13/284,549, filed October 28, 2011, now U.S. Patent No. 8,218,610, which is a continuation of 11/860,080, filed September 24, 2007, now U.S. Patent No. 8,073,041, which is a divisional of U.S. Application No. 11/211,535, filed August 26, 2005, now U.S. Patent No. 7,292,627, which is a continuation of U.S. Application No. 09/710,310, filed on November 9, 2000, now U.S. Patent No. 6,961,369, which claims the benefit of the filing date of copending U.S. Provisional Application, Serial No. 60/164,134, filed November 9, 1999, entitled "A Method For Randomizing The Phase Of The Carriers In A Multicarrier Communications System To Reduce The Peak To Average Power Ratio Of The Transmitted Signal," each which are incorporated by reference herein in their entirety.

REMARKS/ARGUMENTS

By this amendment, the Cross-Reference to Related Applications has been updated. No new matter is believed to be introduced by this amendment.

The Commissioner is hereby authorized to charge to deposit account number 19-1970 any fees under 37 CFR § 1.16 and 1.17 that may be required by this paper and to credit any overpayment to that Account. If any extension of time is required in connection with the filing of this paper and has not been separately requested, such extension is hereby petitioned.

Respectfully submitted,

SHERIDAN ROSS P.C.

By: _____

Jason H. Vick
Registration No. 45,285
1560 Broadway, Suite 1200
Denver, Colorado 80202-5141
(303) 863-9700

Date: 30 Oct 12

DISH
Exhibit 1003 Page 30

IN THE UNITED STATES PATENT AND TRADEMARK OFFICE

In Re the Application of: Marcos C. Tzannes	Group Art Unit: 2634
Application No.: 13/439,605	Examiner: WILLIAMS, Lawrence B.
Filed: April 4, 2012	Confirmation No.: 4069
Atty. File No.: 6936-47-CON-DIV-CON-2	

For: SYSTEM AND METHOD FOR DESCRAMBLING THE PHASE OF CARRIERS IN A MULTICARRIER COMMUNICATIONS SYSTEM

COMMENTS ON STATEMENT OF REASONS FOR ALLOWANCE

Commissioner for Patents
P.O. Box 1450
Alexandria, VA 22313

Madam:

Applicant submits this Comments on Statement of Reasons for Allowance to address further the Notice of Allowability ("Notice") having a mailing date of September 14, 2012.

In the Notice, the Examiner's stated reasons for allowance were that:

> The following is an examiner's statement of reasons for allowance: The instant application discloses a method and system for demodulating a bit stream. The closest prior art of record is applicant's U. S. Patent 8,218,610 B2 for which a Terminal Disclaimer was filed on 9/5/2012. A search of prior art records has failed to teach or suggest, alone or in combination:
>
> A method, in a first transceiver that uses a plurality of carrier signals for receiving a bit stream that was transmitted by a second transceiver, wherein each carrier signal has a phase characteristic associated with the bit stream, the method comprising:
> "receiving the bit stream from the second transceiver, wherein:
> each carrier signal is associated with a value determined independently of any bit value of the bit stream carried by that respective carrier signal, the value associated with each carrier signal determined by a pseudo-random number generator,

a phase shift for each carrier signal is at least based on:

the value associated with that carrier signal, and

the combining of a phase for each carrier signal with the phase characteristic of that respective carrier signal so as to substantially scramble the phase characteristics of the plurality of carrier signals, and

multiple carrier signals corresponding to the plurality of phase shifted and scrambled carrier signals are used by the first multicarrier transceiver to demodulate a same bit value of the received bit stream; and

wherein:

the first and second transceivers communicate over one or more of a pair of twisted wires of a telephone subscriber line and fiber optic and wireless, and the first and second transceivers transport one or more applications" (Fig(s). 1,2; pg. 16, lines 5-13) as disclosed in claim 21.

A communication system including a first transceiver that uses a plurality of carrier signals for receiving a bit stream that was transmitted by a second transceiver, wherein each carrier signal has a phase characteristic associated with the bit stream, the transceiver capable of receiving from the second transceiver the bit stream,

wherein:

each carrier signal is associated with a value determined independently of any bit value of the bit stream carried by that respective carrier signal, the value associated with each carrier signal determined by a pseudo-random number generator,

a phase shift for each carrier signal is at least based on:

the value associated with that carrier signal, and

the combining of a phase for each carrier signal with the phase characteristic of that respective carrier signal so as to substantially scramble the phase characteristics of the plurality of carrier signals, and

multiple carrier signals corresponding to the plurality of phase shifted and scrambled carrier signals are used by the first multicarrier transceiver to demodulate a same bit value of the received bit stream; and

wherein:

the first and second transceivers communicate over one or more of a pair of twisted wires of a telephone subscriber line and fiber optic and wireless, and the first and second transceivers transport one or more applications" (Fig(s). 1,2; pg. 16, lines 5 - 13) as disclosed in claim 34.

A method, in a first transceiver that uses a plurality of carrier signals for receiving a bit stream that was transmitted by a second transceiver, wherein each carrier signal has a phase characteristic associated with the bit stream, the method comprising:

"receiving the bit stream from the second transceiver, wherein:

each carrier signal is associated with a value determined independently of any bit value of the bit stream carried by that respective carrier signal, the value associated with each carrier signal determined by a pseudo-random number generator,

a phase shift for each carrier signal is at least based on:

the value associated with that carrier signal, and

the combining of a phase for each carrier signal with the phase characteristic of that respective carrier signal so as to substantially scramble the phase characteristics of the plurality of carrier signals, and

multiple carrier signals corresponding to the plurality of phase shifted and scrambled carrier signals are used by the first multicarrier transceiver to demodulate a same bit value of the received bit stream; and

wherein:

the first and second transceivers communicate over one or more of a pair of twisted wires of a telephone subscriber line and fiber optic and wireless, and

the first and second transceivers are used for one or more applications" (Fig(s). 1, 2; pg. 16, lines 5-13) as disclosed in claim 51.

Based on the Notice, the patentability of all other independent and dependent claims is assumed to be based upon the elements as set forth in such claims and that such claims meet all criteria for patentability under §101, §102, §103 and §112.

As is clear from MPEP 1302.14,

"The statement [of reasons for allowance] is not intended to necessarily state all the reasons for allowance or all the details why claims are allowed and should not be written to specifically or impliedly state that all the reasons for allowance are set forth."

While the stated Reasons for Allowance may be a stated reason for allowing some independent claims, Applicant submits that some independent claims have a different reason for allowance and that some independent claims have other reasons for allowance.

Specifically, the prior art fails to teach the specific combination of features as recited in the independent claims 21, 34, and 51.

Although the Applicant believes that no fees are due for filing this Comments on Statement of Reasons for Allowance, please charge any fees deemed necessary to Deposit Account No. 19-1970.

Respectfully submitted,

SHERIDAN ROSS P.C.

Date: 8 Oct 12

By: _____

Jason H. Vick
Reg. No. 45,285
1560 Broadway, Suite 1200
Denver, Colorado 80202
Telephone: 303-863-9700

PTO/AIA/96 (08-12)
Approved for use through 01/31/2013. OMB 0651-0031
U.S. Patent and Trademark Office; U.S. DEPARTMENT OF COMMERCE
Under the Paperwork Reduction Act of 1995, no persons are required to respond to a collection of information unless it displays a valid OMB control number.

STATEMENT UNDER 37 CFR 3.73(c)

Applicant/Patent Owner: TQ DELTA, LLC

Application No./Patent No.: 13/439,605 Filed/Issue Date: April 4, 2012

Titled: System And Method For Descrambling The Phase Of Carriers In A Multicarrier Communications System

TQ DELTA, LLC, a Corporation

(Name of Assignee) (Type of Assignee, e.g., corporation, partnership, university, government agency, etc.)

states that, for the patent application/patent identified above, it is (choose **one** of options 1, 2, 3 or 4 below):

1. [✓] The assignee of the entire right, title, and interest.

2. [ ] An assignee of less than the entire right, title, and interest (check applicable box):

   [ ] The extent (by percentage) of its ownership interest is _____%. Additional Statement(s) by the owners holding the balance of the interest must be submitted to account for 100% of the ownership interest.

   [ ] There are unspecified percentages of ownership. The other parties, including inventors, who together own the entire right, title and interest are:

   Additional Statement(s) by the owner(s) holding the balance of the interest must be submitted to account for the entire right, title, and interest.

3. [ ] The assignee of an undivided interest in the entirety (a complete assignment from one of the joint inventors was made). The other parties, including inventors, who together own the entire right, title, and interest are:

   Additional Statement(s) by the owner(s) holding the balance of the interest must be submitted to account for the entire right, title, and interest.

4. [ ] The recipient, via a court proceeding or the like (*e.g.*, bankruptcy, probate), of an undivided interest in the entirety (a complete transfer of ownership interest was made). The certified document(s) showing the transfer is attached.

The interest identified in option 1, 2 or 3 above (not option 4) is evidenced by either (choose **one** of options A or B below):

A. [ ] An assignment from the inventor(s) of the patent application/patent identified above. The assignment was recorded in the United States Patent and Trademark Office at Reel _____, Frame _____, or for which a copy thereof is attached.

B. [✓] A chain of title from the inventor(s), of the patent application/patent identified above, to the current assignee as follows:

1. From: Marcos C. Tzannes To: AWARE, INC.

   The document was recorded in the United States Patent and Trademark Office at

   Reel 010877, Frame 0307, or for which a copy thereof is attached.

2. From: AWARE, INC. To: TQ DELTA, LLC

   The document was recorded in the United States Patent and Trademark Office at

   Reel 029154, Frame 0937, or for which a copy thereof is attached.

This collection of information is required by 37 CFR 3.73(b). The information is required to obtain or retain a benefit by the public which is to file (and by the USPTO to process) an application. Confidentiality is governed by 35 U.S.C. 122 and 37 CFR 1.11 and 1.14. This collection is estimated to take 12 minutes to complete, including gathering, preparing, and submitting the completed application form to the USPTO. Time will vary depending upon the individual case. Any comments on the amount of time you require to complete this form and/or suggestions for reducing this burden, should be sent to the Chief Information Officer, U.S. Patent and Trademark Office, U.S. Department of Commerce, P.O. Box 1450, Alexandria, VA 22313-1450. DO NOT SEND FEES OR COMPLETED FORMS TO THIS ADDRESS. **SEND TO: Commissioner for Patents, P.O. Box 1450, Alexandria, VA 22313-1450.**

If you need assistance in completing the form, call 1-800-PTO-9199 and select option 2.

PTO/AIA/96 (08-12)
Approved for use through 01/31/2013. OMB 0651-0031
U.S. Patent and Trademark Office; U.S. DEPARTMENT OF COMMERCE
Under the Paperwork Reduction Act of 1995, no persons are required to respond to a collection of information unless it displays a valid OMB control number.

STATEMENT UNDER 37 CFR 3.73(c)

3. From: _____ To: _____

The document was recorded in the United States Patent and Trademark Office at

Reel _____, Frame _____, or for which a copy thereof is attached.

4. From: _____ To: _____

The document was recorded in the United States Patent and Trademark Office at

Reel _____, Frame _____, or for which a copy thereof is attached.

5. From: _____ To: _____

The document was recorded in the United States Patent and Trademark Office at

Reel _____, Frame _____, or for which a copy thereof is attached.

6. From: _____ To: _____

The document was recorded in the United States Patent and Trademark Office at

Reel _____, Frame _____, or for which a copy thereof is attached.

☐ Additional documents in the chain of title are listed on a supplemental sheet(s).

☑ As required by 37 CFR 3.73(c)(1)(i), the documentary evidence of the chain of title from the original owner to the assignee was, or concurrently is being, submitted for recordation pursuant to 37 CFR 3.11.

[NOTE: A separate copy (i.e., a true copy of the original assignment document(s)) must be submitted to Assignment Division in accordance with 37 CFR Part 3, to record the assignment in the records of the USPTO. See MPEP 302.08]

The undersigned (whose title is supplied below) is authorized to act on behalf of the assignee.

Signature	22 Jan 13 Date
Jason H. Vick Printed or Typed Name	45,285 Title or Registration Number

PTO/AIA/80 (07-12)
Approved for use through 11/30/2014. OMB 0651-0035
U.S. Patent and Trademark Office; U.S DEPARTMENT OF COMMERCE
Under the Paperwork Reduction Act of 1995, no persons are required to respond to a collection of information unless it displays a valid OMB control number.

POWER OF ATTORNEY TO PROSECUTE APPLICATIONS BEFORE THE USPTO

I hereby revoke all previous powers of attorney given in the application identified in the attached statement under 37 CFR 3.73(c).

I hereby appoint:

■ Practitioners associated with Customer Number: 62574

OR

☐ Practitioner(s) named below (If more than ten patent practitioners are to be named, then a customer number must be used):

Name	Registration Number	Name	Registration Number

As attorney(s) or agent(s) to represent the undersigned before the United States Patent and Trademark Office (USPTO) in connection with any and all patent applications assigned only to the undersigned according to the USPTO assignment records or assignments documents attached to this form in accordance with 37 CFR 3.73(c).

Please change the correspondence address for the application identified in the attached statement under 37 CFR 3.73(c) to:

■ The address associated with Customer Number: 62574

OR

☐

Firm or Individual Name			
Address			
City		State	Zip
Country			
Telephone		Email	

Assignee Name and Address: TQ DELTA, LLC
805 Las Cimas Parkway, Suite 240
Austin, Texas 78746

A copy of this form, together with a statement under 37 CFR 3.73(c) (Form PTO/AIA/96 or equivalent) is required to be filed in each application in which this form is used. The statement under 37 CFR 3.73(c) may be completed by one of the practitioners appointed in this form, and must identify the application in which this Power of Attorney is to be filed.

SIGNATURE of Assignee of Record

The individual whose signature and title is supplied below is authorized to act on behalf of the assignee

Signature	Mark Roche	Date	10/4/12
Name	Mark K. Roche	Telephone	512-609-1810
Title	Managing Director		

This collection of information is required by 37 CFR 1.31, 1.32 and 1.33. The information is required to obtain or retain a benefit by the public which is to file (and by the USPTO to process) an application. Confidentiality is governed by 35 U.S.C. 122 and 37 CFR 1.11 and 1.14. This collection is estimated to take 3 minutes to complete, including gathering, preparing, and submitting the completed application form to the USPTO. Time will vary depending upon the individual case. Any comments on the amount of time you require to complete this form and/or suggestions for reducing this burden, should be sent to the Chief Information Officer, U.S. Patent and Trademark Office, U.S. Department of Commerce, P.O. Box 1450, Alexandria, VA 22313-1450. DO NOT SEND FEES OR COMPLETED FORMS TO THIS ADDRESS. **SEND TO: Commissioner for Patents, P.O. Box 1450, Alexandria, VA 22313-1450.**

If you need assistance in completing the form, call 1-800-PTO-9199 and select option 2.

Electronic Patent Application Fee Transmittal

Application Number:	13439605
Filing Date:	04-Apr-2012
Title of Invention:	SYSTEM AND METHOD FOR DESCRAMBLING THE PHASE OF CARRIERS IN A MULTICARRIER COMMUNICATIONS SYSTEM
First Named Inventor/Applicant Name:	Marcos C. Tzannes
Filer:	Jason Vick/Joanne Vos
Attorney Docket Number:	6936-47-CON-DIV-CON-2

Filed as Small Entity

Utility under 35 USC 111(a) Filing Fees

Description	Fee Code	Quantity	Amount	Sub-Total in USD($)
Basic Filing:				
Pages:				
Claims:				
Miscellaneous-Filing:				
Petition:				
Patent-Appeals-and-Interference:				
Post-Allowance-and-Post-Issuance:				
Utility Appl issue fee	2501	1	885	885
Publ. Fee- early, voluntary, or normal	1504	1	300	300

Description	Fee Code	Quantity	Amount	Sub-Total in USD($)
Extension-of-Time:				
Miscellaneous:				
			Total in USD ($)	**1185**

Electronic Acknowledgement Receipt	
EFS ID:	14107367
Application Number:	13439605
International Application Number:	
Confirmation Number:	4069
Title of Invention:	SYSTEM AND METHOD FOR DESCRAMBLING THE PHASE OF CARRIERS IN A MULTICARRIER COMMUNICATIONS SYSTEM
First Named Inventor/Applicant Name:	Marcos C. Tzannes
Customer Number:	62574
Filer:	Jason Vick/Joanne Vos
Filer Authorized By:	Jason Vick
Attorney Docket Number:	6936-47-CON-DIV-CON-2
Receipt Date:	30-OCT-2012
Filing Date:	04-APR-2012
Time Stamp:	17:43:41
Application Type:	Utility under 35 USC 111(a)

Payment information:

Submitted with Payment	yes
Payment Type	Deposit Account
Payment was successfully received in RAM	$1185
RAM confirmation Number	3343
Deposit Account	191970
Authorized User	
The Director of the USPTO is hereby authorized to charge indicated fees and credit any overpayment as follows: Charge any Additional Fees required under 37 C.F.R. Section 1.16 (National application filing, search, and examination fees) Charge any Additional Fees required under 37 C.F.R. Section 1.17 (Patent application and reexamination processing fees)	

Charge any Additional Fees required under 37 C.F.R. Section 1.19 (Document supply fees)

Charge any Additional Fees required under 37 C.F.R. Section 1.20 (Post Issuance fees)

Charge any Additional Fees required under 37 C.F.R. Section 1.21 (Miscellaneous fees and charges)

File Listing:

Document Number	Document Description	File Name	File Size(Bytes)/ Message Digest	Multi Part /.zip	Pages (if appl.)
1	Issue Fee Payment (PTO-85B)	Issue_Fee_Transmittal.pdf	164850 904ffab0ad63c89207a7a8cd049f5064a30cbe64	no	1
Warnings:					
Information:					
2	Miscellaneous Incoming Letter	Change_of_Entity_Status.pdf	82139 ef6e4fb690000674086a3ffc14fcd6d14019bbd8	no	1
Warnings:					
Information:					
3		AMENDMENT_312.pdf	194014 3ac5197960843f1e6ad7c43708c4a9c0a1855e4a	yes	3

Multipart Description/PDF files in .zip description

Document Description	Start	End
Amendment after Notice of Allowance (Rule 312)	1	1
Specification	2	2
Applicant Arguments/Remarks Made in an Amendment	3	3

Warnings:					
Information:					
4	Post Allowance Communication - Incoming	Comments_on_Reason_for_Allowance.pdf	352891 91869767c29854596c67ba7a997de3abb8a7cc4f	no	4
Warnings:					
Information:					
5		Statement_Under_373c_w_POA.pdf	346114 f644fb3df755715433a13456e974d4922a389003	yes	3

Multipart Description/PDF files in .zip description

Document Description	Start	End
Assignee showing of ownership per 37 CFR 3.73.	1	2
Power of Attorney	3	3

Warnings:					
Information:					
6	Fee Worksheet (SB06)	fee-info.pdf	32081 c811c437dd0d044c379171430a144b8440994b02	no	2
Warnings:					
Information:					
			Total Files Size (in bytes):	1172089	

This Acknowledgement Receipt evidences receipt on the noted date by the USPTO of the indicated documents, characterized by the applicant, and including page counts, where applicable. It serves as evidence of receipt similar to a Post Card, as described in MPEP 503.

New Applications Under 35 U.S.C. 111
If a new application is being filed and the application includes the necessary components for a filing date (see 37 CFR 1.53(b)-(d) and MPEP 506), a Filing Receipt (37 CFR 1.54) will be issued in due course and the date shown on this Acknowledgement Receipt will establish the filing date of the application.

National Stage of an International Application under 35 U.S.C. 371
If a timely submission to enter the national stage of an international application is compliant with the conditions of 35 U.S.C. 371 and other applicable requirements a Form PCT/DO/EO/903 indicating acceptance of the application as a national stage submission under 35 U.S.C. 371 will be issued in addition to the Filing Receipt, in due course.

New International Application Filed with the USPTO as a Receiving Office
If a new international application is being filed and the international application includes the necessary components for an international filing date (see PCT Article 11 and MPEP 1810), a Notification of the International Application Number and of the International Filing Date (Form PCT/RO/105) will be issued in due course, subject to prescriptions concerning national security, and the date shown on this Acknowledgement Receipt will establish the international filing date of the application.

UNITED STATES PATENT AND TRADEMARK OFFICE

UNITED STATES DEPARTMENT OF COMMERCE
United States Patent and Trademark Office
Address: COMMISSIONER FOR PATENTS
P.O. Box 1450
Alexandria, Virginia 22313-1450
www.uspto.gov

NOTICE OF ALLOWANCE AND FEE(S) DUE

62574 7590 09/14/2012

Jason H. Vick
Sheridan Ross, PC
Suite # 1200
1560 Broadway
Denver, CO 80202

EXAMINER
WILLIAMS, LAWRENCE B

ART UNIT	PAPER NUMBER
2611	

DATE MAILED: 09/14/2012

APPLICATION NO.	FILING DATE	FIRST NAMED INVENTOR	ATTORNEY DOCKET NO.	CONFIRMATION NO.
13/439,605	04/04/2012	Marcos C. Tzannes	5550-47-CON-DIV-CON-2	4069

TITLE OF INVENTION: SYSTEM AND METHOD FOR DESCRAMBLING THE PHASE OF CARRIERS IN A MULTICARRIER COMMUNICATIONS SYSTEM

APPLN. TYPE	SMALL ENTITY	ISSUE FEE DUE	PUBLICATION FEE DUE	PREV. PAID ISSUE FEE	TOTAL FEE(S) DUE	DATE DUE
nonprovisional	NO	$1740	$300	$0	$2040	12/14/2012

THE APPLICATION IDENTIFIED ABOVE HAS BEEN EXAMINED AND IS ALLOWED FOR ISSUANCE AS A PATENT. PROSECUTION ON THE MERITS IS CLOSED. THIS NOTICE OF ALLOWANCE IS NOT A GRANT OF PATENT RIGHTS. THIS APPLICATION IS SUBJECT TO WITHDRAWAL FROM ISSUE AT THE INITIATIVE OF THE OFFICE OR UPON PETITION BY THE APPLICANT. SEE 37 CFR 1.313 AND MPEP 1308.

THE ISSUE FEE AND PUBLICATION FEE (IF REQUIRED) MUST BE PAID WITHIN THREE MONTHS FROM THE MAILING DATE OF THIS NOTICE OR THIS APPLICATION SHALL BE REGARDED AS ABANDONED. THIS STATUTORY PERIOD CANNOT BE EXTENDED. SEE 35 U.S.C. 151. THE ISSUE FEE DUE INDICATED ABOVE DOES NOT REFLECT A CREDIT FOR ANY PREVIOUSLY PAID ISSUE FEE IN THIS APPLICATION. IF AN ISSUE FEE HAS PREVIOUSLY BEEN PAID IN THIS APPLICATION (AS SHOWN ABOVE), THE RETURN OF PART B OF THIS FORM WILL BE CONSIDERED A REQUEST TO REAPPLY THE PREVIOUSLY PAID ISSUE FEE TOWARD THE ISSUE FEE NOW DUE.

HOW TO REPLY TO THIS NOTICE:

I. Review the SMALL ENTITY status shown above.

If the SMALL ENTITY is shown as YES, verify your current SMALL ENTITY status:

A. If the status is the same, pay the TOTAL FEE(S) DUE shown above.

B. If the status above is to be removed, check box 5b on Part B - Fee(s) Transmittal and pay the PUBLICATION FEE (if required) and twice the amount of the ISSUE FEE shown above, or

If the SMALL ENTITY is shown as NO:

A. Pay TOTAL FEE(S) DUE shown above, or

B. If applicant claimed SMALL ENTITY status before, or is now claiming SMALL ENTITY status, check box 5a on Part B - Fee(s) Transmittal and pay the PUBLICATION FEE (if required) and 1/2 the ISSUE FEE shown above.

II. PART B - FEE(S) TRANSMITTAL, or its equivalent, must be completed and returned to the United States Patent and Trademark Office (USPTO) with your ISSUE FEE and PUBLICATION FEE (if required). If you are charging the fee(s) to your deposit account, section "4b" of Part B - Fee(s) Transmittal should be completed and an extra copy of the form should be submitted. If an equivalent of Part B is filed, a request to reapply a previously paid issue fee must be clearly made, and delays in processing may occur due to the difficulty in recognizing the paper as an equivalent of Part B.

III. All communications regarding this application must give the application number. Please direct all communications prior to issuance to Mail Stop ISSUE FEE unless advised to the contrary.

IMPORTANT REMINDER: Utility patents issuing on applications filed on or after Dec. 12, 1980 may require payment of maintenance fees. It is patentee's responsibility to ensure timely payment of maintenance fees when due.

PTOL-85 (Rev. 02/11)

DISH
Exhibit 1003 Page 43

PART B - FEE(S) TRANSMITTAL

Complete and send this form, together with applicable fee(s), to: Mail **Mail Stop ISSUE FEE**
Commissioner for Patents
P.O. Box 1450
Alexandria, Virginia 22313-1450
or Fax (571)-273-2885

INSTRUCTIONS: This form should be used for transmitting the ISSUE FEE and PUBLICATION FEE (if required). Blocks 1 through 5 should be completed where appropriate. All further correspondence including the Patent, advance orders and notification of maintenance fees will be mailed to the current correspondence address as indicated unless corrected below or directed otherwise in Block 1, by (a) specifying a new correspondence address; and/or (b) indicating a separate "FEE ADDRESS" for maintenance fee notifications.

CURRENT CORRESPONDENCE ADDRESS (Note: Use Block 1 for any change of address)

62574 7590 09/14/2012

Jason H. Vick
Sheridan Ross, PC
Suite # 1200
1560 Broadway
Denver, CO 80202

Note: A certificate of mailing can only be used for domestic mailings of the Fee(s) Transmittal. This certificate cannot be used for any other accompanying papers. Each additional paper, such as an assignment or formal drawing, must have its own certificate of mailing or transmission.

Certificate of Mailing or Transmission

I hereby certify that this Fee(s) Transmittal is being deposited with the United States Postal Service with sufficient postage for first class mail in an envelope addressed to the Mail Stop ISSUE FEE address above, or being facsimile transmitted to the USPTO (571) 273-2885, on the date indicated below.

(Depositor's name)

(Signature)

(Date)

APPLICATION NO.	FILING DATE	FIRST NAMED INVENTOR	ATTORNEY DOCKET NO.	CONFIRMATION NO.
13/439,605	04/04/2012	Marcos C. Tzannes	5550-47-CON-DIV-CON-2	4069

TITLE OF INVENTION: SYSTEM AND METHOD FOR DESCRAMBLING THE PHASE OF CARRIERS IN A MULTICARRIER COMMUNICATIONS SYSTEM

APPLN. TYPE	SMALL ENTITY	ISSUE FEE DUE	PUBLICATION FEE DUE	PREV. PAID ISSUE FEE	TOTAL FEE(S) DUE	DATE DUE
nonprovisional	NO	$1740	$300	$0	$2040	12/14/2012

EXAMINER	ART UNIT	CLASS-SUBCLASS
WILLIAMS, LAWRENCE B	2611	375-222000

1. Change of correspondence address or indication of "Fee Address" (37 CFR 1.363).

❑ Change of correspondence address (or Change of Correspondence Address form PTO/SB/122) attached.

❑ "Fee Address" indication (or "Fee Address" Indication form PTO/SB/47; Rev 03-02 or more recent) attached. **Use of a Customer Number is required.**

2. For printing on the patent front page, list

(1) the names of up to 3 registered patent attorneys or agents OR, alternatively,

(2) the name of a single firm (having as a member a registered attorney or agent) and the names of up to 2 registered patent attorneys or agents. If no name is listed, no name will be printed.

1 _____

2 _____

3 _____

3. ASSIGNEE NAME AND RESIDENCE DATA TO BE PRINTED ON THE PATENT (print or type)

PLEASE NOTE: Unless an assignee is identified below, no assignee data will appear on the patent. If an assignee is identified below, the document has been filed for recordation as set forth in 37 CFR 3.11. Completion of this form is NOT a substitute for filing an assignment.

(A) NAME OF ASSIGNEE (B) RESIDENCE: (CITY and STATE OR COUNTRY)

Please check the appropriate assignee category or categories (will not be printed on the patent) : ❑ Individual ❑ Corporation or other private group entity ❑ Government

4a. The following fee(s) are submitted:

❑ Issue Fee

❑ Publication Fee (No small entity discount permitted)

❑ Advance Order - # of Copies _____

4b. Payment of Fee(s): **(Please first reapply any previously paid issue fee shown above)**

❑ A check is enclosed.

❑ Payment by credit card. Form PTO-2038 is attached.

❑ The Director is hereby authorized to charge the required fee(s), any deficiency, or credit any overpayment, to Deposit Account Number _____ (enclose an extra copy of this form).

5. **Change in Entity Status** (from status indicated above)

❑ a. Applicant claims SMALL ENTITY status. See 37 CFR 1.27.

❑ b. Applicant is no longer claiming SMALL ENTITY status. See 37 CFR 1.27(g)(2).

NOTE: The Issue Fee and Publication Fee (if required) will not be accepted from anyone other than the applicant; a registered attorney or agent; or the assignee or other party in interest as shown by the records of the United States Patent and Trademark Office.

Authorized Signature _____ Date _____

Typed or printed name _____ Registration No. _____

This collection of information is required by 37 CFR 1.311. The information is required to obtain or retain a benefit by the public which is to file (and by the USPTO to process) an application. Confidentiality is governed by 35 U.S.C. 122 and 37 CFR 1.14. This collection is estimated to take 12 minutes to complete, including gathering, preparing, and submitting the completed application form to the USPTO. Time will vary depending upon the individual case. Any comments on the amount of time you require to complete this form and/or suggestions for reducing this burden, should be sent to the Chief Information Officer, U.S. Patent and Trademark Office, U.S. Department of Commerce, P.O. Box 1450, Alexandria, Virginia 22313-1450. DO NOT SEND FEES OR COMPLETED FORMS TO THIS ADDRESS. SEND TO: Commissioner for Patents, P.O. Box 1450, Alexandria, Virginia 22313-1450.

Under the Paperwork Reduction Act of 1995, no persons are required to respond to a collection of information unless it displays a valid OMB control number.

DISH
Exhibit 1003 Page 44

UNITED STATES PATENT AND TRADEMARK OFFICE

UNITED STATES DEPARTMENT OF COMMERCE
United States Patent and Trademark Office
Address: COMMISSIONER FOR PATENTS
P.O. Box 1450
Alexandria, Virginia 22313-1450
www.uspto.gov

APPLICATION NO.	FILING DATE	FIRST NAMED INVENTOR	ATTORNEY DOCKET NO.	CONFIRMATION NO.
13/439,605	04/04/2012	Marcos C. Tzannes	5550-47-CON-DIV-CON-2	4069

62574 7590 09/14/2012

Jason H. Vick
Sheridan Ross, PC
Suite # 1200
1560 Broadway
Denver, CO 80202

EXAMINER	
WILLIAMS, LAWRENCE B	
ART UNIT	**PAPER NUMBER**
2611	

DATE MAILED: 09/14/2012

Determination of Patent Term Adjustment under 35 U.S.C. 154 (b)
(application filed on or after May 29, 2000)

The Patent Term Adjustment to date is 0 day(s). If the issue fee is paid on the date that is three months after the mailing date of this notice and the patent issues on the Tuesday before the date that is 28 weeks (six and a half months) after the mailing date of this notice, the Patent Term Adjustment will be 0 day(s).

If a Continued Prosecution Application (CPA) was filed in the above-identified application, the filing date that determines Patent Term Adjustment is the filing date of the most recent CPA.

Applicant will be able to obtain more detailed information by accessing the Patent Application Information Retrieval (PAIR) WEB site (http://pair.uspto.gov).

Any questions regarding the Patent Term Extension or Adjustment determination should be directed to the Office of Patent Legal Administration at (571)-272-7702. Questions relating to issue and publication fee payments should be directed to the Customer Service Center of the Office of Patent Publication at 1-(888)-786-0101 or (571)-272-4200.

PTOL-85 (Rev. 02/11)

Privacy Act Statement

The Privacy Act of 1974 (P.L. 93-579) requires that you be given certain information in connection with your submission of the attached form related to a patent application or patent. Accordingly, pursuant to the requirements of the Act, please be advised that: (1) the general authority for the collection of this information is 35 U.S.C. 2(b)(2); (2) furnishing of the information solicited is voluntary; and (3) the principal purpose for which the information is used by the U.S. Patent and Trademark Office is to process and/or examine your submission related to a patent application or patent. If you do not furnish the requested information, the U.S. Patent and Trademark Office may not be able to process and/or examine your submission, which may result in termination of proceedings or abandonment of the application or expiration of the patent.

The information provided by you in this form will be subject to the following routine uses:

1. The information on this form will be treated confidentially to the extent allowed under the Freedom of Information Act (5 U.S.C. 552) and the Privacy Act (5 U.S.C 552a). Records from this system of records may be disclosed to the Department of Justice to determine whether disclosure of these records is required by the Freedom of Information Act.
2. A record from this system of records may be disclosed, as a routine use, in the course of presenting evidence to a court, magistrate, or administrative tribunal, including disclosures to opposing counsel in the course of settlement negotiations.
3. A record in this system of records may be disclosed, as a routine use, to a Member of Congress submitting a request involving an individual, to whom the record pertains, when the individual has requested assistance from the Member with respect to the subject matter of the record.
4. A record in this system of records may be disclosed, as a routine use, to a contractor of the Agency having need for the information in order to perform a contract. Recipients of information shall be required to comply with the requirements of the Privacy Act of 1974, as amended, pursuant to 5 U.S.C. 552a(m).
5. A record related to an International Application filed under the Patent Cooperation Treaty in this system of records may be disclosed, as a routine use, to the International Bureau of the World Intellectual Property Organization, pursuant to the Patent Cooperation Treaty.
6. A record in this system of records may be disclosed, as a routine use, to another federal agency for purposes of National Security review (35 U.S.C. 181) and for review pursuant to the Atomic Energy Act (42 U.S.C. 218(c)).
7. A record from this system of records may be disclosed, as a routine use, to the Administrator, General Services, or his/her designee, during an inspection of records conducted by GSA as part of that agency's responsibility to recommend improvements in records management practices and programs, under authority of 44 U.S.C. 2904 and 2906. Such disclosure shall be made in accordance with the GSA regulations governing inspection of records for this purpose, and any other relevant (i.e., GSA or Commerce) directive. Such disclosure shall not be used to make determinations about individuals.
8. A record from this system of records may be disclosed, as a routine use, to the public after either publication of the application pursuant to 35 U.S.C. 122(b) or issuance of a patent pursuant to 35 U.S.C. 151. Further, a record may be disclosed, subject to the limitations of 37 CFR 1.14, as a routine use, to the public if the record was filed in an application which became abandoned or in which the proceedings were terminated and which application is referenced by either a published application, an application open to public inspection or an issued patent.
9. A record from this system of records may be disclosed, as a routine use, to a Federal, State, or local law enforcement agency, if the USPTO becomes aware of a violation or potential violation of law or regulation.

Notice of Allowability	Application No.	Applicant(s)	
	13/439,605	TZANNES, MARCOS C.	
	Examiner	Art Unit	
	LAWRENCE B. WILLIAMS	2611	

-- The MAILING DATE of this communication appears on the cover sheet with the correspondence address--

All claims being allowable, PROSECUTION ON THE MERITS IS (OR REMAINS) CLOSED in this application. If not included herewith (or previously mailed), a Notice of Allowance (PTOL-85) or other appropriate communication will be mailed in due course. **THIS NOTICE OF ALLOWABILITY IS NOT A GRANT OF PATENT RIGHTS.** This application is subject to withdrawal from issue at the initiative of the Office or upon petition by the applicant. See 37 CFR 1.313 and MPEP 1308.

1. ☒ This communication is responsive to *Terminal Disclaimer filed 9/5/2012*.

2. ☐ An election was made by the applicant in response to a restriction requirement set forth during the interview on _____; the restriction requirement and election have been incorporated into this action.

3. ☒ The allowed claim(s) is/are *2-48, 51, renumbered as 1-29, respectively*.

4. ☐ Acknowledgment is made of a claim for foreign priority under 35 U.S.C. § 119(a)-(d) or (f).

   a) ☐ All b) ☐ Some* c) ☐ None of the:

   1. ☐ Certified copies of the priority documents have been received.
   2. ☐ Certified copies of the priority documents have been received in Application No. _____ .
   3. ☐ Copies of the certified copies of the priority documents have been received in this national stage application from the International Bureau (PCT Rule 17.2(a)).

   * Certified copies not received: _____.

Applicant has THREE MONTHS FROM THE "MAILING DATE" of this communication to file a reply complying with the requirements noted below. Failure to timely comply will result in ABANDONMENT of this application.
THIS THREE-MONTH PERIOD IS NOT EXTENDABLE.

5. ☐ A SUBSTITUTE OATH OR DECLARATION must be submitted. Note the attached EXAMINER'S AMENDMENT or NOTICE OF INFORMAL PATENT APPLICATION (PTO-152) which gives reason(s) why the oath or declaration is deficient.

6. ☐ CORRECTED DRAWINGS (as "replacement sheets") must be submitted.

   (a) ☐ including changes required by the Notice of Draftsperson's Patent Drawing Review (PTO-948) attached

   1) ☐ hereto or 2) ☐ to Paper No./Mail Date _____.

   (b) ☐ including changes required by the attached Examiner's Amendment / Comment or in the Office action of Paper No./Mail Date _____.

   Identifying indicia such as the application number (see 37 CFR 1.84(c)) should be written on the drawings in the front (not the back) of each sheet. Replacement sheet(s) should be labeled as such in the header according to 37 CFR 1.121(d).

7. ☐ DEPOSIT OF and/or INFORMATION about the deposit of BIOLOGICAL MATERIAL must be submitted. Note the attached Examiner's comment regarding REQUIREMENT FOR THE DEPOSIT OF BIOLOGICAL MATERIAL.

Attachment(s)

1. ☒ Notice of References Cited (PTO-892)
2. ☐ Notice of Draftperson's Patent Drawing Review (PTO-948)
3. ☒ Information Disclosure Statements (PTO/SB/08), Paper No./Mail Date _____
4. ☐ Examiner's Comment Regarding Requirement for Deposit of Biological Material
5. ☐ Notice of Informal Patent Application
6. ☒ Interview Summary (PTO-413), Paper No./Mail Date *9/6/2012* .
7. ☒ Examiner's Amendment/Comment
8. ☒ Examiner's Statement of Reasons for Allowance
9. ☒ Other *OA. Appendix*.

EXAMINER'S AMENDMENT

1. An examiner's amendment to the record appears below. Should the changes and/or additions be unacceptable to applicant, an amendment may be filed as provided by 37 CFR 1.312. To ensure consideration of such an amendment, it MUST be submitted no later than the payment of the issue fee.

Authorization for this examiner's amendment was given in a telephone interview with Jason Vick on 9/6/2012.

The application has been amended as follows:

a.) Claim 49 is cancelled.

b.) Claim 50 is cancelled.

REMARKS

Drawings

1. The drawings were received on 4/4/2012. These drawings are accepted by the examiner.

Terminal Disclaimer

2. The terminal disclaimer filed on 9/5/2012 disclaiming the terminal portion of any patent granted on this application which would extend beyond the expiration date of U.S. Patent 8,218,610 B2 has been reviewed and is accepted. The terminal disclaimer has been recorded.

REASONS FOR ALLOWANCE

1. The following is an examiner's statement of reasons for allowance: The instant application discloses a method and system for demodulating a bit stream. The closest prior art of record is applicant's U. S. Patent 8, 218, 610 B2 for which a Terminal Disclaimer was filed on 9/5/2012. A search of prior art records has failed to teach or suggest, alone or in combination:

A method, in a first transceiver that uses a plurality of carrier signals for receiving a bit stream that was transmitted by a second transceiver, wherein each carrier signal has a phase characteristic associated with the bit stream, the method comprising:

"receiving the bit stream from the second transceiver, wherein:

each carrier signal is associated with a value determined independently of any bit value of the bit stream carried by that respective carrier signal, the value associated with each carrier signal determined by a pseudo-random number generator,

a phase shift for each carrier signal is at least based on:

the value associated with that carrier signal, and

the combining of a phase for each carrier signal with the phase characteristic of that respective carrier signal so as to substantially scramble the phase characteristics of the plurality of carrier signals, and

multiple carrier signals corresponding to the plurality of phase shifted and scrambled carrier signals are used by the first multicarrier transceiver to demodulate a same bit value of the received bit stream; and

wherein:

the first and second transceivers communicate over one or more of a pair of twisted wires of a telephone subscriber line and fiber optic and wireless, and the first and second transceivers transport one or more applications" (Fig(s). 1, 2; pg. 16, lines 5-13) as disclosed in claim 21.

A communication system including a first transceiver that uses a plurality of carrier signals for receiving a bit stream that was transmitted by a second transceiver, wherein each carrier signal has a phase characteristic associated with the bit stream, the transceiver capable of receiving from the second transceiver the bit stream,

wherein:

each carrier signal is associated with a value determined independently of any bit value of the bit stream carried by that respective carrier signal, the value associated with each carrier signal determined by a pseudo-random number generator,

a phase shift for each carrier signal is at least based on:

the value associated with that carrier signal, and

the combining of a phase for each carrier signal with the phase characteristic of that respective carrier signal so as to substantially scramble the phase characteristics of the plurality of carrier signals, and

multiple carrier signals corresponding to the plurality of phase shifted and scrambled carrier signals are used by the first multicarrier transceiver to demodulate a same bit value of the received bit stream; and

wherein:

the first and second transceivers communicate over one or more of a pair of twisted wires of a telephone subscriber line and fiber optic and wireless, and the first and second transceivers transport one or more applications" (Fig(s). 1, 2; pg. 16, lines 5 - 13) as disclosed in claim 34.

A method, in a first transceiver that uses a plurality of carrier signals for receiving a bit stream that was transmitted by a second transceiver, wherein each carrier signal has a phase characteristic associated with the bit stream, the method comprising:

"receiving the bit stream from the second transceiver, wherein:

each carrier signal is associated with a value determined independently of any bit value of the bit stream carried by that respective carrier signal, the value associated with each carrier signal determined by a pseudo-random number generator,

a phase shift for each carrier signal is at least based on:

the value associated with that carrier signal, and

the combining of a phase for each carrier signal with the phase characteristic of that respective carrier signal so as to substantially scramble the phase characteristics of the plurality of carrier signals, and

multiple carrier signals corresponding to the plurality of phase shifted and scrambled carrier signals are used by the first multicarrier transceiver to demodulate a same bit value of the received bit stream; and

wherein:

the first and second transceivers communicate over one or more of a pair of twisted wires of a telephone subscriber line and fiber optic and wireless, and

the first and second transceivers are used for one or more applications"

(Fig(s). 1, 2; pg. 16, lines 5-13) as disclosed in claim 51.

Any comments considered necessary by applicant must be submitted no later than the payment of the issue fee and, to avoid processing delays, should preferably accompany the issue fee. Such submissions should be clearly labeled "Comments on Statement of Reasons for Allowance."

CONCLUSION

2. The prior art made of record and not relied upon is considered pertinent to applicant's disclosure.

a.) Petranovich et al. discloses Sample Interpolator And Method Of Generating Additional Samples Of A Sampled Waveform Using A Programmable Sample Divider in US Patent 5,937,010.

b.) Hayashino et al. discloses Method Of Transmitting Orthogonal Frequency Division Multiplex Signal, And Transmitter and Receiver Employed Therefor in US Patent 5,682,376.

3. Any inquiry concerning this communication or earlier communications from the examiner should be directed to Lawrence B Williams whose telephone number is 571-272-3037. The examiner can normally be reached on Monday-Friday (8:00-6:00).

If attempts to reach the examiner by telephone are unsuccessful, the examiner's supervisor, David Ometz can be reached on 571-272-7593. The fax phone number for the organization where this application or proceeding is assigned is 571-273-8300.

Information regarding the status of an application may be obtained from the Patent Application Information Retrieval (PAIR) system. Status information for published applications may be obtained from either Private PAIR or Public PAIR. Status information for unpublished applications is available through Private PAIR only. For more information about the PAIR system, see http://pair-direct.uspto.gov. Should you have questions on access to the Private PAIR system, contact the Electronic Business Center (EBC) at 866-217-9197 (toll-free).

/LAWRENCE B WILLIAMS/
Primary Examiner, Art Unit 2611

lbw
September 11, 2012

Notice of References Cited	Application/Control No. 13/439,605	Applicant(s)/Patent Under Reexamination TZANNES, MARCOS C.	
	Examiner LAWRENCE B. WILLIAMS	Art Unit 2611	Page 1 of 1

U.S. PATENT DOCUMENTS

*		Document Number Country Code-Number-Kind Code	Date MM-YYYY	Name	Classification
*	A	US-5,937,010	08-1999	Petranovich et al.	375/295
*	B	US-5,682,376	10-1997	Hayashino et al.	370/206
	C	US-			
	D	US-			
	E	US-			
	F	US-			
	G	US-			
	H	US-			
	I	US-			
	J	US-			
	K	US-			
	L	US-			
	M	US-			

FOREIGN PATENT DOCUMENTS

*		Document Number Country Code-Number-Kind Code	Date MM-YYYY	Country	Name	Classification
	N					
	O					
	P					
	Q					
	R					
	S					
	T					

NON-PATENT DOCUMENTS

*		Include as applicable: Author, Title Date, Publisher, Edition or Volume, Pertinent Pages)
	U	
	V	
	W	
	X	

*A copy of this reference is not being furnished with this Office action. (See MPEP § 707.05(a).)
Dates in MM-YYYY format are publication dates. Classifications may be US or foreign.

IN THE UNITED STATES PATENT AND TRADEMARK OFFICE

In Re the Application of: TZANNES, Marcos C. Serial No.: Filed: Herewith Atty. File No.: 5550-47-CON-DIV-CON-2 Entitled: "System and Method for Descrambling the Phase of the Carriers in a Multicarrier Communications System"	)	Group Art Unit: Confirmation No.: Examiner: Not Yet Assigned INFORMATION DISCLOSURE STATEMENT Electronically Submitted

Commissioner for Patents
P.O. Box 1450
Alexandria, VA 22313-1450

Dear Sir:

The references cited on attached Form PTO-1449 are being called to the attention of the Examiner.

☒ Copies of the cited non-patent and/or foreign references are enclosed herewith.

☐ Copies of the cited U.S. patents and/or patent applications are enclosed herewith.

☒ Copies of the cited U.S. patents/patent application publications are not enclosed in accordance with 37 C.F.R. § 1.98(a).

☐ Copies of the cited references are not enclosed, in accordance with 37 C.F.R. § 1.98(d), because the references were cited by or submitted to the U.S. Patent and Trademark Office in prior application Serial No. _____ filed _____, which is relied upon for an earlier filing date under 35 U.S.C. § 120.

☒ To the best of applicants' belief, the pertinence of the foreign-language references are believed to be summarized in the attached English abstracts and/or in the figures, although applicants do not necessarily vouch for the accuracy of the translation.

☒ Examiner's attention is drawn to the following related applications:

- Serial No. 09/710,310 filed 11/09/2000 now U.S. Patent No. 6,961,369 (Attorney's Ref. No. 5550-47)
- Serial No. 11/211,535 filed 08/26/2005 now U.S. Patent No. 7,292,627 (Attorney's Ref. No. 5550-47-CON)
- Serial No. 11/860,080 filed 09/24/2007 now U.S. Patent No. 8,073,041 (Attorney's Ref. No. 5550-47-CON-DIV)

DISH
Exhibit 1003 Page 56

- Serial No. 13/284,549 filed 10/28/2011 (Attorney's Ref. No. 5550-47-CON-DIV-CON)
- Serial No. 11/863,581 filed 09/28/2007 now U.S. Patent No. 7,471,721 (Attorney's Ref. No. 5550-47-CON-2)
- Serial No. 12/255,713 filed 10/22/2008 now U.S. Patent No. 7,769,104 (Attorney's Ref. No. 5550-47-CON-3)
- Serial No. 12/783,725 filed 05/20/2010 now U.S. Patent No. 8,090,008 (Attorney's Ref. No. 5550-47-CON-4)
- Serial No. 13/303,417 filed 11/23/2011 (Attorney's Ref. No. 5550-47-CON-5)

☐ Other:_____

Submission of the above information is not intended as an admission that any item is citable under the statutes or rules to support a rejection, that any item disclosed represents analogous art, or that those skilled in the art would refer to or recognize the pertinence of any reference without the benefit of hindsight, nor should an inference be drawn as to the pertinence of the references based on the order in which they are presented. Submission of this statement should not be taken as an indication that a search has been conducted, or that no better art exists.

It is respectfully requested that the cited information be expressly considered during the prosecution of this application and the references made of record therein.

FEES

☒	**37 CFR 1.97(b)**: No fee is believed due in connection with this submission, because the information disclosure statement submitted herewith is satisfied by one of the following conditions ("X" indicates satisfaction): ☐ Within three months of the filing date of a national application other than a continued prosecution application under 37 CFR 1.53(d), or ☐ Within three months of the date of entry of the national stage as set forth in § 1.491 in an international application, or ☒ Before the mailing date of a first Office Action on the merits, or ☐ Before the mailing of a first Office action after the filing of a request for continued examination under 37 CFR 1.114. Although no fee is believed due, if any fee is deemed due in connection with this submission, please charge such fee to Deposit Account 19-1970.
☐	**37 CFR 1.97(c)**: The information disclosure statement transmitted herewith is being filed after all the above conditions (37 CFR 1.97(b)), but before the mailing date of any one of the following conditions: (1) a final action under 37 C.F.R. 1.113, or (2) a notice of allowance under 37 C.F.R. 1.311, or (3) an action that otherwise closes prosecution in the application. This Information Disclosure Statement is accompanied by: ☐ A Certification (below) as specified by 37 C.F.R. 1.97(e). Although no fee is believed due, if any fee is deemed due in connection with this submission, please charge such fee to Deposit Account 19-1970. OR ☐ Please charge Deposit Account 19-1970 in the amount of $180.00 for the fee set forth in 37 C.F.R. 1.17(p) for submission of an information disclosure statement. Please credit any overpayment or charge any underpayment to Deposit Account 19-1970.

DISH
Exhibit 1003 Page 57

☐	**37 CFR 1.97(d)**: This Information Disclosure Statement is being submitted after the period specified in 37 CFR 1.97(c). ☐ This information Disclosure Statement includes a Certification (below) as specified by 37 C.F.R. 1.97(e) AND ☐ Applicants hereby requests consideration of the reference(s) disclosed herein. Please charge Deposit Account 19-1970 in the amount of $180.00 under 37 C.F.R. 1.17(p). Please credit any overpayment or charge any underpayment to Deposit Account 19-1970. Election to pay the fee should not be taken as an indication that applicant(s) cannot execute a certification.

Certification (37 C.F.R. 1.97(e))
(Applicable only if checked)

☐ The undersigned certifies that:

☐ Each item of information contained in this information disclosure statement was first cited in any communication from a foreign patent office in a counterpart foreign application not more than three months prior to the filing of this statement. 37 C.F.R. 1.97(e)(1).

☐ A copy of the communication from the foreign patent office is enclosed.

OR

☐ No item of information contained in this information disclosure statement was cited in a communication from a foreign patent office in a counterpart foreign application, and, to the knowledge of the undersigned after making reasonable inquiry, no item of information contained in this Information Disclosure Statement was known to any individual designated in 37 C.F.R. 1.56(c) more than three months prior to the filing of this statement. 37 C.F.R. 1.97(e)(2).

Respectfully submitted,

SHERIDAN ROSS P.C.

By: _____

Jason H. Vick
Registration No. 45,285
1560 Broadway, Suite 1200
Denver, Colorado 80202-5141
(303) 863-9700

Date: 4 Apr '12

/Lawrence Williams/ 09/03/2012

DISH
Exhibit 1003 Page 58

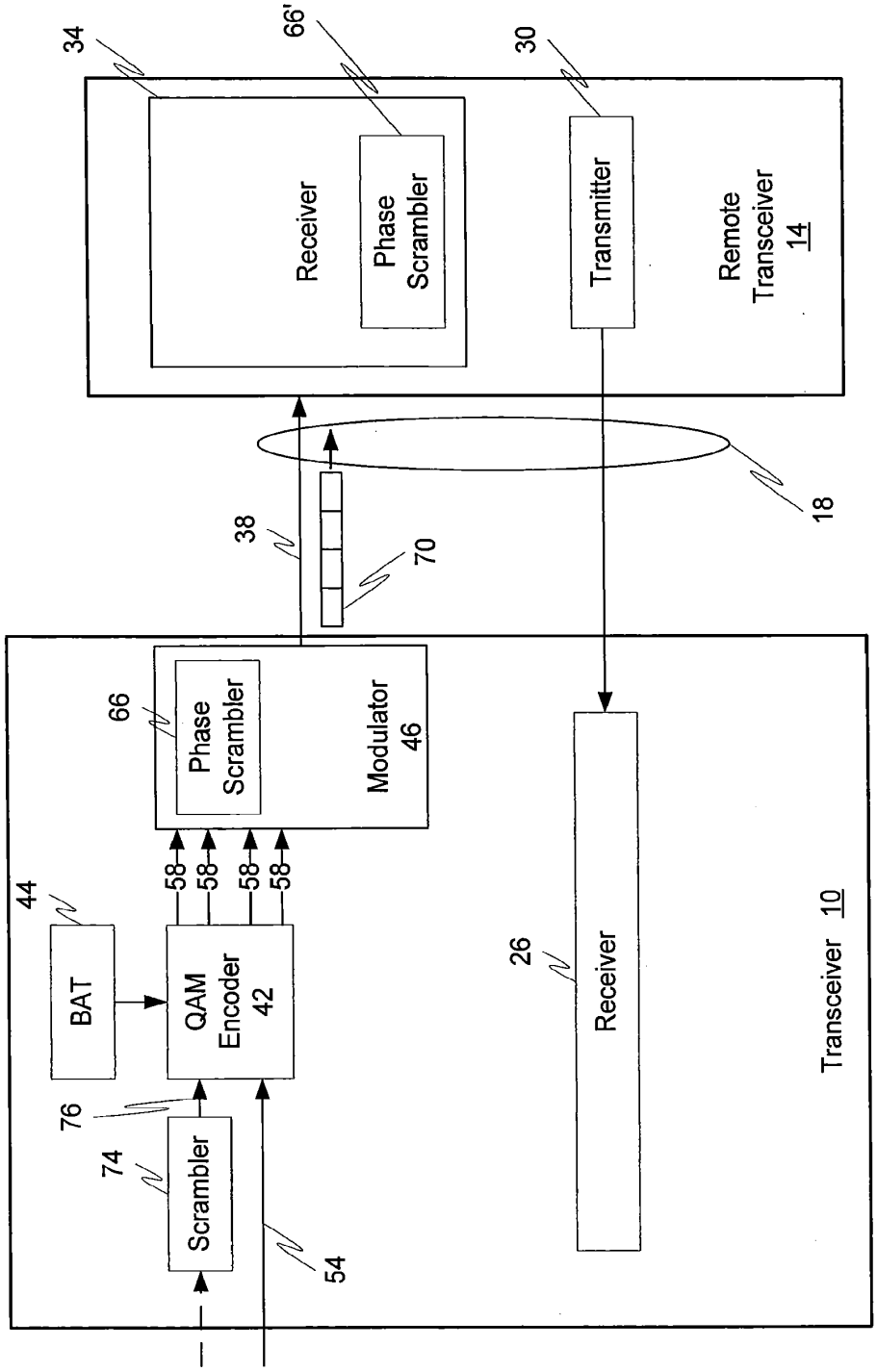
34
66'
30
Receiver
Phase Scrambler
Transmitter
Remote Transceiver 14
18
38
70
66
Phase Scrambler
Modulator 46
58
58
58
58
44
BAT
QAM Encoder 42
76
74
Scrambler
54
26
Receiver
Transceiver 10

Fig. 1

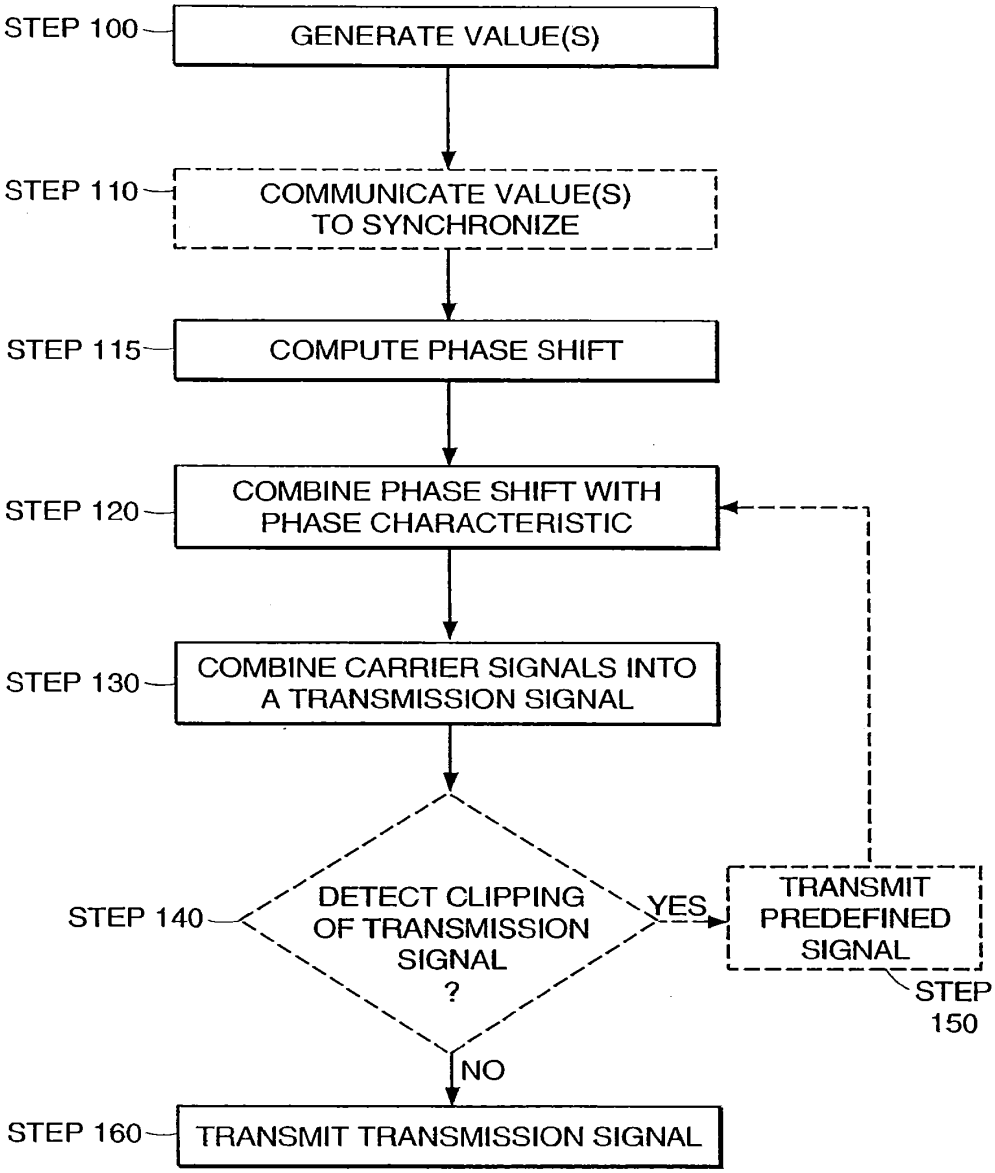
STEP 100
GENERATE VALUE(S)
STEP 110
COMMUNICATE VALUE(S) TO SYNCHRONIZE
STEP 115
COMPUTE PHASE SHIFT
STEP 120
COMBINE PHASE SHIFT WITH PHASE CHARACTERISTIC
STEP 130
COMBINE CARRIER SIGNALS INTO A TRANSMISSION SIGNAL
STEP 140
DETECT CLIPPING OF TRANSMISSION SIGNAL ?
YES
TRANSMIT PREDEFINED SIGNAL
STEP 150
NO
STEP 160
TRANSMIT TRANSMISSION SIGNAL

FIG. 2

Index of Claims	Application/Control No.	Applicant(s)/Patent Under Reexamination
	13439605	TZANNES, MARCOS C.
	Examiner	Art Unit
	LAWRENCE B WILLIAMS	2611

✓	Rejected	-	Cancelled	N	Non-Elected	A	Appeal
=	Allowed	÷	Restricted	I	Interference	O	Objected

☐ Claims renumbered in the same order as presented by applicant ☐ CPA ☒ T.D. ☐ R.1.47

CLAIM		DATE								
Final	Original	09/06/2012								
-	1	-								
-	2	-								
-	3	-								
-	4	-								
-	5	-								
-	6	-								
-	7	-								
-	8	-								
-	9	-								
-	10	-								
-	11	-								
-	12	-								
-	13	-								
-	14	-								
-	15	-								
-	16	-								
-	17	-								
-	18	-								
-	19	-								
-	20	-								
1	21	=								
2	22	=								
3	23	=								
4	24	=								
5	25	=								
6	26	=								
7	27	=								
8	28	=								
9	29	=								
10	30	=								
11	31	=								
12	32	=								
13	33	=								
14	34	=								
15	35	=								
16	36	=								

Index of Claims	Application/Control No.	Applicant(s)/Patent Under Reexamination
	13439605	TZANNES, MARCOS C.
	Examiner	Art Unit
	LAWRENCE B WILLIAMS	2611

✓	Rejected	-	Cancelled	N	Non-Elected	A	Appeal
=	Allowed	÷	Restricted	I	Interference	O	Objected

☐ Claims renumbered in the same order as presented by applicant ☐ CPA ☒ T.D. ☐ R.1.47

CLAIM		DATE								
Final	Original	09/06/2012								
17	37	=								
18	38	=								
19	39	=								
20	40	=								
21	41	=								
22	42	=								
23	43	=								
24	44	=								
25	45	=								
26	46	=								
27	47	=								
28	48	=								
-	49	-								
-	50	-								
29	51	=								

EAST Search History

EAST Search History (Prior Art)

Ref #	Hits	Search Query	DBs	Default Operator	Plurals	Time Stamp
L1	2	(455/73 455/91 455/108).ccls. and (randomiz$3 scrambl$3) near3 phase	US-PGPUB; USPAT; EPO; JPO; DERWENT	OR	ON	2012/09/05 16:26
L2	16	375/260.ccls. and (scrambl$3 randomiz$3) near4 phase same (carrier$3 sub adj carrier$1 multi adj carrier)	US-PGPUB; USPAT; EPO; JPO; DERWENT	OR	ON	2012/09/05 16:26
L3	29	(375/260 375/267 375/316 375/298 375/362).ccls. and (scrambl$3 randomiz$3) near4 phase same (carrier$3 sub adj carrier$1 multi adj carrier)	US-PGPUB; USPAT; EPO; JPO; DERWENT	OR	ON	2012/09/05 16:27
L4	3	3 and @ad<="19991109"	US-PGPUB; USPAT; EPO; JPO; DERWENT	OR	ON	2012/09/05 16:27
S1	16	tzannes.in. and scrambling near3 phase	US-PGPUB; USPAT; USOCR; FPRS; EPO; JPO; DERWENT; IBM_TDB	OR	ON	2009/10/02 21:12
S2	4	"60164134"	US-PGPUB; USPAT; USOCR; FPRS; EPO; JPO; DERWENT; IBM_TDB	OR	ON	2009/10/02 21:16
S3	0	" a method for randomizing the phase of the carriers in a multicarrier"	US-PGPUB; USPAT; USOCR; FPRS; EPO; JPO; DERWENT; IBM_TDB	OR	ON	2009/10/02 21:18
S4	0	"a method for randomizing the phase"	US-PGPUB; USPAT; USOCR; FPRS; EPO; JPO; DERWENT; IBM_TDB	OR	ON	2009/10/02 21:19
S5	4	"7471721".pn. "7292627".pn. "6961369".pn.	US-PGPUB; USPAT; USOCR; FPRS; EPO; JPO; DERWENT;	OR	ON	2009/10/05 10:18

			IBM_TDB			
S6	3	"7471721".pn. "7292627".pn. "6961369".pn.	USPAT	OR	ON	2009/10/05 10:19
S7	15	"3955141".pn. "4985900".pn. "5682376".pn. "5748677".pn. "6256355".pn. "6507585".pn. "6590860".pn. "6704317".pn. "6961369".pn. "7292627".pn. "20050141410" "20060092902" "20060140288" "20080069253"	US-PGPUB; USPAT	OR	ON	2009/10/05 13:54
S8	4	S7 and (comput$3 estimat$3 determin$3) near4 phase adj shift same (carrier$3 sub adj carrier$1 multi adj carrier)	US-PGPUB; USPAT	OR	ON	2009/10/05 13:57
S9	23	375/260.ccls. and (comput$3 estimat$3 determin$3) near4 phase adj shift same (carrier$3 sub adj carrier$1 multi adj carrier)	US-PGPUB; USPAT; EPO; JPO; DERWENT	OR	ON	2009/10/05 13:58
S10	1	S9 and @ad<="19991109"	US-PGPUB; USPAT; EPO; JPO; DERWENT	OR	ON	2009/10/05 13:58
S11	8	(375/219 375/222).ccls. and (comput$3 estimat$3 determin$3) near4 phase adj shift same (carrier$3 sub adj carrier$1 multi adj carrier)	US-PGPUB; USPAT; EPO; JPO; DERWENT	OR	ON	2009/10/05 13:59
S12	0	S11 and @ad<="19991109"	US-PGPUB; USPAT; EPO; JPO; DERWENT	OR	ON	2009/10/05 14:00
S13	11	375/260.ccls. and (scrambl$3 randomiz$3) near4 phase same (carrier$3 sub adj carrier$1 multi adj carrier)	US-PGPUB; USPAT; EPO; JPO; DERWENT	OR	ON	2009/10/05 14:01
S14	1	S13 and @ad<="19991109"	US-PGPUB; USPAT; EPO; JPO; DERWENT	OR	ON	2009/10/05 14:01
S15	7	(375/219 375/222).ccls. and (scrambl$3 randomiz$3) near4 phase same (carrier$3 sub adj carrier$1 multi adj carrier)	US-PGPUB; USPAT; EPO; JPO; DERWENT	OR	ON	2009/10/05 14:03
S16	1	S15 and @ad<="19991109"	US-PGPUB; USPAT; EPO; JPO; DERWENT	OR	ON	2009/10/05 14:03
S17	5	(370/281 370/295 370/330 370/343 370/436 370/478 370/480 370/481 370/57 370/69.1).ccls. and (scrambl$3 randomiz$3) near4 phase same (carrier$3 sub adj carrier$1 multi adj carrier)	US-PGPUB; USPAT; EPO; JPO; DERWENT	OR	ON	2009/10/05 15:45
S18	1	S17 and @ad<="19991109"	US-PGPUB; USPAT; EPO; JPO; DERWENT	OR	ON	2009/10/05 15:45
S19	10	(370/281 370/295 370/330 370/343 370/436 370/478 370/480 370/481 370/57 370/69.1).ccls. and (comput$3 estimat$3 determin$3) near4 phase adj shift same (carrier$3 sub adj carrier$1 multi adj	US-PGPUB; USPAT; EPO; JPO; DERWENT	OR	ON	2009/10/05 15:47

		carrier)				
S20	4	S19 and @ad<="19991109"	US-PGPUB; USPAT; EPO; JPO; DERWENT	OR	ON	2009/10/05 15:48
S21	13	(375/260 375/267 375/362).ccls. and (scrambl$3 randomiz$3) near4 phase same (carrier$3 sub adj carrier$1 multi adj carrier)	US-PGPUB; USPAT; EPO; JPO; DERWENT	OR	ON	2009/10/05 15:53
S22	2	S21 and @ad<="19991109"	US-PGPUB; USPAT; EPO; JPO; DERWENT	OR	ON	2009/10/05 15:53
S23	31	(375/260 375/267 375/362).ccls. and (comput$3 estimat$3 determin$3) near4 phase adj shift same (carrier$3 sub adj carrier$1 multi adj carrier)	US-PGPUB; USPAT; EPO; JPO; DERWENT	OR	ON	2009/10/05 15:54
S24	2	S23 and @ad<="19991109"	US-PGPUB; USPAT; EPO; JPO; DERWENT	OR	ON	2009/10/05 15:54
S25	3	(375/295).ccls. and (comput$3 estimat$3 determin$3) near4 phase adj shift same (carrier$3 sub adj carrier$1 multi adj carrier)	US-PGPUB; USPAT; EPO; JPO; DERWENT	OR	ON	2009/10/05 15:55
S26	0	S25 and @ad<="19991109"	US-PGPUB; USPAT; EPO; JPO; DERWENT	OR	ON	2009/10/05 15:57
S27	2	"6,590,860" .pn.	US-PGPUB; USPAT; USOCR; FPRS; EPO; JPO; DERWENT; IBM_TDB	OR	ON	2010/04/19 22:54
S28	6	tzannes.in. and ((randomiz$3 scrambling) near3 phase).clm.	US-PGPUB; USPAT; USOCR; FPRS; EPO; JPO; DERWENT; IBM_TDB	OR	ON	2010/04/20 08:32
S29	15	tzannes.in. and scrambling near3 phase	US-PGPUB; USPAT	OR	ON	2010/04/22 16:22
S30	5	tzannes.in. and scrambling near3 phase.clm.	US-PGPUB; USPAT; USOCR; FPRS; EPO; JPO; DERWENT; IBM_TDB	OR	ON	2010/04/22 16:23
S31	14	(375/259 375/261 375/295 375/298 375/219 375/220).ccls. and (comput$3 estimat$3 determin$3) near4 phase adj shift same (carrier$3 sub adj carrier$1 multi adj carrier)	US-PGPUB; USPAT; EPO; JPO; DERWENT	OR	ON	2010/04/22 22:45
S32	2	S31 and @ad<="19991109"	US-PGPUB; USPAT;	OR	ON	2010/04/22 22:45

			EPO; JPO; DERWENT			
S33	43	(375/259 375/261 375/295 375/298 375/219 375/220).ccls. and (randomiz$3 scrambl$3) near3 phase	US-PGPUB; USPAT; EPO; JPO; DERWENT	OR	ON	2010/04/22 22:47
S34	12	S33 and @ad<="19991109"	US-PGPUB; USPAT; EPO; JPO; DERWENT	OR	ON	2010/04/22 22:47
S35	17	(370/206 370/208).ccls. and (randomiz$3 scrambl$3) near3 phase	US-PGPUB; USPAT; EPO; JPO; DERWENT	OR	ON	2010/04/22 22:52
S36	6	S35 and @ad<="19991109"	US-PGPUB; USPAT; EPO; JPO; DERWENT	OR	ON	2010/04/22 22:52
S37	2	(455/73 455/91 455/108).ccls. and (randomiz$3 scrambl$3) near3 phase	US-PGPUB; USPAT; EPO; JPO; DERWENT	OR	ON	2010/04/22 22:55
S38	8	"6519292".pn. "6256355".pn. "5742679".pn. "5682376".pn.	US-PGPUB; USPAT; EPO; JPO; DERWENT	OR	ON	2010/04/26 11:38
S39	4	"6519292".pn. "6256355".pn. "5742679".pn. "5682376".pn.	USPAT	OR	ON	2010/04/26 11:38
S40	4	S38 and (randomiz$3 scrambl$3) near3 phase	US-PGPUB; USPAT; EPO; JPO; DERWENT	OR	ON	2010/04/26 11:39
S41	1	"12255713" and independently	US-PGPUB; USPAT; EPO; JPO; DERWENT	OR	ON	2010/04/26 11:41
S42	1	"6519292".pn. and randomiz$3 near2 phase$1	US-PGPUB; USPAT; EPO; JPO; DERWENT	OR	ON	2010/04/26 13:50
S43	1	"6519292".pn. and (predetermined adj rule initial adj phase adj value$1)	US-PGPUB; USPAT; EPO; JPO; DERWENT	OR	ON	2010/04/26 13:51
S44	1	"6256355".pn. and (predetermined adj rule initial adj phase adj value$1)	US-PGPUB; USPAT; EPO; JPO; DERWENT	OR	ON	2010/04/26 13:53
S45	4	(375/377).ccls. and (randomiz$3 scrambl$3) near3 phase	US-PGPUB; USPAT; EPO; JPO; DERWENT	OR	ON	2010/04/26 16:50
S46	25	("6590860" | "6967997" | "6757299" | "7610028" | "20060002454" | "6519292" | "5991262" | "6519929" | "5694395" | "5870016" | "6366555" | "4985900" | "6507585" | "20060140288" | "3955141" | "6256355" | "6704317" | "4069392" | "5381449" | "20050141410" | "5748677" |	US-PGPUB; USPAT	OR	ON	2011/08/30 23:54

		"20060092902" | "5682376" | "6128350" | "6961369").PN.				
S47	4	S46 and (phase near2 characteristic$1 scrambl$3 random$3 spreading) same phase near2 shift same carrier$1	US-PGPUB; USPAT	OR	ON	2011/08/30 23:56
S48	3	"12255713"	US-PGPUB; USPAT	OR	ON	2011/08/31 00:04
S49	220	(375/259 375/260 375/261 375/267 375/298 375/299 375/316 375/320 375/324 375/340).ccls. and (phase near2 characteristic$1 scrambl$3 random$3 spreading) same phase near2 shift same carrier$1	US-PGPUB; USPAT	OR	ON	2011/08/31 00:27
S50	220	(375/259 375/260 375/261 375/267 375/298 375/299 375/316 375/320 375/324 375/340).ccls. and (phase near2 characteristic$1 scrambl$3 random$3 spreading) same phase near2 shift same carrier$1	US-PGPUB; USPAT; EPO; JPO; DERWENT	OR	ON	2011/08/31 00:27
S51	44	S50 and @ad<="19991109"	US-PGPUB; USPAT; EPO; JPO; DERWENT	OR	ON	2011/08/31 00:28
S52	41	(375/219 375/220 375/222).ccls. and (phase near2 characteristic$1 scrambl$3 random$3 spreading) same phase near2 shift same carrier$1	US-PGPUB; USPAT	OR	ON	2011/08/31 00:31
S53	23	S52 and @ad<="19991109"	US-PGPUB; USPAT; EPO; JPO; DERWENT	OR	ON	2011/08/31 00:31
S54	29	(370/281 370/295 370/343 370/480 370/481).ccls. and (phase near2 characteristic$1 scrambl$3 random$3 spreading) same phase near2 shift same carrier$1	US-PGPUB; USPAT	OR	ON	2011/08/31 00:32
S55	11	S54 and @ad<="19991109"	US-PGPUB; USPAT; EPO; JPO; DERWENT	OR	ON	2011/08/31 00:32
S56	6	tzannes.in. and scrambling near3 phase.clm.	US-PGPUB; USPAT; USOCR; FPRS; EPO; JPO; DERWENT; IBM_TDB	OR	ON	2011/08/31 00:39
S57	2	"12840024"	US-PGPUB; USPAT	OR	ON	2011/08/31 01:22
S58	67	(375/259 375/260 375/261 375/295 375/298 375/316 375/320 375/340).ccls. and (comput$3 estimat$3 determin$3) near4 phase adj shift same (carrier$3 sub adj carrier$1 multi adj carrier)	US-PGPUB; USPAT; EPO; JPO; DERWENT	OR	ON	2011/09/20 21:56
S59	9	S58 and @ad<="19991109"	US-PGPUB; USPAT; EPO; JPO; DERWENT	OR	ON	2011/09/20 21:56
S60	75	(375/259 375/260 375/261 375/295	US-PGPUB;	OR	ON	2011/09/20

		375/298 375/316 375/320 375/340).ccls. and phase near2 scrambl$3	USPAT; EPO; JPO; DERWENT			21:57
S61	8	S60 and @ad<="19991109"	US-PGPUB; USPAT; EPO; JPO; DERWENT	OR	ON	2011/09/20 21:57
S62	235	phase near2 scrambl$3 and @ad<="19991109"	US-PGPUB; USPAT; EPO; JPO; DERWENT	OR	ON	2011/09/20 21:59
S63	29	S62 and phase near2 scrambl$3 same (carrier$3 cahnnel$1)	US-PGPUB; USPAT; EPO; JPO; DERWENT	OR	ON	2011/09/20 22:00
S64	2	"11860080"	US-PGPUB; USPAT	OR	ON	2012/03/08 14:18
S65	1	"13284549"	US-PGPUB; USPAT	OR	ON	2012/03/08 14:29
S66	1	"13284549" and (computer software)	US-PGPUB; USPAT	OR	ON	2012/03/08 14:29
S67	0	(tzannes.in.) and "capabale of".clm.	US-PGPUB; USPAT	OR	ON	2012/03/08 15:28
S68	0	(tzannes.in.) and ("capabale of").clm.	US-PGPUB; USPAT	OR	ON	2012/03/08 15:29
S69	0	(marcos adj tzannes).in. and ("capabale of").clm.	US-PGPUB; USPAT	OR	ON	2012/03/08 15:29
S70	0	(marcos adj tzannes).in. and ("capable of").clm.	US-PGPUB; USPAT	OR	ON	2012/03/08 15:29
S71	0	(marcos adj tzannes).in. and capable.clm.	US-PGPUB; USPAT	OR	ON	2012/03/08 15:30
S72	64	aware.as. and capable.clm.	US-PGPUB; USPAT	OR	ON	2012/03/08 15:31
S73	0	aware.as. and ("capable of").clm.	US-PGPUB; USPAT	OR	ON	2012/03/08 15:31
S74	34	aware.as. and capable.clm.	USPAT	OR	ON	2012/03/08 15:32
S75	33	("20050141410" | "20060092902" | "20060140288" | "20100190507" | "20100290507" | "3898566" | "3955141" | "4069392" | "4358853" | "4985900" | "5381449" | "5682376" | "5694395" | "5748677" | "5870016" | "5991262" | "6128350" | "6256355" | "6366555" | "6507585" | "6519292" | "6590860" | "6704317" | "6757299" | "6961369" | "6967997" | "7257168" | "7286614" | "7292627" | "7471721" | "7610028" | "7769104" | "8073041").PN.	US-PGPUB; USPAT	OR	OFF	2012/03/08 19:03
S77	6	S75 and phase near2 scrambl$3 same (carrier$3 channel$1)	US-PGPUB; USPAT; EPO; JPO; DERWENT	OR	ON	2012/03/08 19:04
S78	0	S77 and @ad<="19991109"	US-PGPUB; USPAT; EPO; JPO; DERWENT	OR	ON	2012/03/08 19:04

S79	4	("tzannes.in" aware.as.) and (phase near3 scrambl$3 and demodulat$3).clm.	US-PGPUB; USPAT; EPO; JPO; DERWENT	OR	ON	2012/03/08 19:06
S80	16	375/260.ccls. and (scrambl$3 randomiz$3) near4 phase same (carrier$3 sub adj carrier$1 multi adj carrier)	US-PGPUB; USPAT; EPO; JPO; DERWENT	OR	ON	2012/03/08 19:08
S81	1	S80 and @ad<="19991109"	US-PGPUB; USPAT; EPO; JPO; DERWENT	OR	ON	2012/03/08 19:08
S82	79	(375/259 375/260 375/261 375/295 375/298 375/316 375/320 375/340).ccls. and phase near2 scrambl$3	US-PGPUB; USPAT; EPO; JPO; DERWENT	OR	ON	2012/03/08 19:11
S83	8	S82 and @ad<="19991109"	US-PGPUB; USPAT; EPO; JPO; DERWENT	OR	ON	2012/03/08 19:11
S84	17	(375/219 375/222).ccls. and (comput$3 estimat$3 determin$3) near4 phase adj shift same (carrier$3 sub adj carrier$1 multi adj carrier)	US-PGPUB; USPAT; EPO; JPO; DERWENT	OR	ON	2012/03/08 19:13
S86	0	S84 and @ad<="19991109"	US-PGPUB; USPAT; EPO; JPO; DERWENT	OR	ON	2012/03/08 19:13
S87	2	(455/73 455/91 455/108).ccls. and (randomiz$3 scrambl$3) near3 phase	US-PGPUB; USPAT; EPO; JPO; DERWENT	OR	ON	2012/03/08 19:14
S88	29	(370/281 370/295 370/343 370/480 370/481).ccls. and (phase near2 characteristic$1 scrambl$3 random$3 spreading) same phase near2 shift same carrier$1	US-PGPUB; USPAT	OR	ON	2012/03/08 19:14
S89	2	(370/281 370/295 370/343 370/480 370/481).ccls. and phase near2 (characteristic$1 scrambl$3 random$3 spreading) same phase near2 shift same carrier$1	US-PGPUB; USPAT	OR	ON	2012/03/08 19:15
S90	2	(US-5937010-$ or US-5682376-$).did.	USPAT	OR	OFF	2012/03/08 19:25
S91	0	"0719004"	EPO; DERWENT	OR	ON	2012/04/03 11:42
S92	5	"0719004"	US-PGPUB; USPAT; EPO; JPO; DERWENT	OR	ON	2012/04/03 11:43
S93	4	"9929078"	US-PGPUB; USPAT; EPO; JPO; DERWENT	OR	ON	2012/04/03 11:46

9/5/2012 4:30:27 PM
C:\Users\lwilliams5\Documents\EAST\Workspaces\13284549.wsp

Search Notes	Application/Control No.	Applicant(s)/Patent Under Reexamination
	13439605	TZANNES, MARCOS C.
	Examiner	Art Unit
	LAWRENCE B WILLIAMS	2611

SEARCHED			
Class	Subclass	Date	Examiner
375	219, 220, 222, 259-261, 267, 298-299, 316, 320, 324, 340	9/5/2012	LW
370	281, 295, 343, 480-481	9/5/2012	LW
455	73, 91, 108	9/5/2012	LW

SEARCH NOTES		
Search Notes	Date	Examiner
EAST, NPL, Inventor	9/5/2012	LW

INTERFERENCE SEARCH			
Class	Subclass	Date	Examiner
375	222, 261, 298, 316	9/5/2012	LW

UNITED STATES PATENT AND TRADEMARK OFFICE

UNITED STATES DEPARTMENT OF COMMERCE
United States Patent and Trademark Office
Address: COMMISSIONER FOR PATENTS
P.O. Box 1450
Alexandria, Virginia 22313-1450
www.uspto.gov

BIB DATA SHEET

CONFIRMATION NO. 4069

SERIAL NUMBER	FILING or 371(c) DATE	CLASS	GROUP ART UNIT	ATTORNEY DOCKET NO.
13/439,605	04/04/2012 RULE	375	2611	5550-47-CON-DIV-CON-2

APPLICANTS

Marcos C. Tzannes, Orinda, CA;

**** CONTINUING DATA ***************************

This application is a CON of 13/284,549 10/28/2011 PAT 8,218,610
which is a CON of 11/860,080 09/24/2007 PAT 8,073,041
which is a DIV of 11/211,535 08/26/2005 PAT 7,292,627
which is a CON of 09/710,310 11/09/2000 PAT 6,961,369
which claims benefit of 60/164,134 11/09/1999

**** FOREIGN APPLICATIONS ***************************

**** IF REQUIRED, FOREIGN FILING LICENSE GRANTED ****

04/17/2012

Foreign Priority claimed ☐ Yes ☑ No 35 USC 119(a-d) conditions met ☐ Yes ☑ No Verified and Acknowledged /LAWRENCE B WILLIAMS/ Examiner's Signature	☐ Met after Allowance Initials	STATE OR COUNTRY	SHEETS DRAWINGS	TOTAL CLAIMS	INDEPENDENT CLAIMS
		CA	2	31	3

ADDRESS

Jason H. Vick
Sheridan Ross, PC
Suite # 1200
1560 Broadway
Denver, CO 80202
UNITED STATES

TITLE

SYSTEM AND METHOD FOR DESCRAMBLING THE PHASE OF CARRIERS IN A MULTICARRIER COMMUNICATIONS SYSTEM

FILING FEE RECEIVED		
1910	FEES: Authority has been given in Paper No._____ to charge/credit DEPOSIT ACCOUNT No._____ for following:	☐ All Fees ☐ 1.16 Fees (Filing) ☐ 1.17 Fees (Processing Ext. of time) ☐ 1.18 Fees (Issue) ☐ Other _____ ☐ Credit

BIB (Rev. 05/07).

Issue Classification

Application/Control No.	Applicant(s)/Patent Under Reexamination
13439605	TZANNES, MARCOS C.
Examiner	**Art Unit**
LAWRENCE B WILLIAMS	2611

ORIGINAL		INTERNATIONAL CLASSIFICATION	
CLASS	SUBCLASS	CLAIMED	NON-CLAIMED
375	222	H 0 4 B 1 / 38 (2006.01.01)	
CROSS REFERENCE(S)		H 0 4 L 5 / 12 (2006.01.01)	
		H 0 4 L 27 / 36 (2006.01.01)	
CLASS	SUBCLASS (ONE SUBCLASS PER BLOCK)	H 0 4 L 27 / 06 (2006.01.01)	
375	261 298 316		

☐ Claims renumbered in the same order as presented by applicant ☐ CPA ☒ T.D. ☐ R.1.47

Final	Original	Final	Original	Final	Original	Final	Original	Final	Original	Final	Original	Final	Original	Final	Original
-	1	-	17	13	33	-	-								
-	2	-	18	14	34	-	-								
-	3	-	19	15	35	29	51								
-	4	-	20	16	36										
-	5	1	21	17	37										
-	6	2	22	18	38										
-	7	3	23	19	39										
-	8	4	24	20	40										
-	9	5	25	21	41										
-	10	6	26	22	42										
-	11	7	27	23	43										
-	12	8	28	24	44										
-	13	9	29	25	45										
-	14	10	30	26	46										
-	15	11	31	27	47										
-	16	12	32	28	48										

NONE		**Total Claims Allowed:**	
(Assistant Examiner)	(Date)	29	
/LAWRENCE B WILLIAMS/ Primary Examiner.Art Unit 2611	9/5/2012	O.G. Print Claim(s)	O.G. Print Figure
(Primary Examiner)	(Date)	34	1

Substitute for form 1449A/PTO

INFORMATION DISCLOSURE STATEMENT BY APPLICANT

Sheet	1	of	4

Complete if Known	
Application Number	13/439,605
Filing Date	04/04/2012
First Named Inventor	Marcos C. Tzannes
Art Unit	2611
Examiner Name	Not Yet Assigned
Attorney Docket Number	5550-47-CON-DIV-CON-2

U.S. PATENT DOCUMENTS

Examiner Initials*	Cite No.[1]	Document Number Number-kind Code [2] (if known)	Publication Date MM-DD-YYYY	Name of Patentee of Applicant of Cited Document	Pages, Columns, Lines, Where Relevant Passages or Relevant Figures Appear
/L.W./	1	3898566	08/05/1975	Switzer et al.	
	2	3955141	05/01/1976	Lyon et al.	
	3	4069392	01/17/1978	Goldenberg et al.	
	4	4358853	11/09/1982	Qureshi	
	5	4985900	01/01/1991	Rhind et al.	
	6	5381449	01/10/1995	Jasper et al.	
	7	5682376	10/28/1997	Hayashino et al.	
	8	5694395	12/02/1997	Myer et al.	
	9	5748677	05/01/1998	Kumar	
	10	5870016	02/09/1999	Shrestha	
	11	5937010	08/10/1999	Petranovich et al.	
	12	5991262	11/23/1999	Laird et al.	
	13	6128350	10/03/2000	Shastri et al.	
	14	6256355	07/03/2001	Sakoda et al.	
	15	6366555	04/02/2002	Gatherer et al.	
	16	6507585	01/01/2003	Dobson	
	17	6519292	02/11/2003	Sakoda et al.	
	18	6590860	07/08/2003	Sakoda et al.	
	19	6704317	03/01/2004	Dobson	
	20	6757299	06/29/2004	Verma	
	21	6961369	11/01/2005	Tzannes	
	22	6967997	11/22/2005	Humphrey	
	23	7257168	08/14/2007	Goldstein et al.	
	24	7286614	10/23/2007	Goldstein et al.	
	25	7292627	11/06/2007	Tzannes	
	26	7471721	12/30/2008	Tzannes	
	27	7610028	10/27/2009	Cimini, Jr. et al.	
	28	7769104	08/03/2010	Tzannes	
	29	8073041	12/06/2011	Tzannes	
	30	8090008	01/03/2012	Tzannes	
	31	2005/0141410	06/30/2005	Zhang et al.	
/L.W./	32	2006/0092902	05/04/2006	Schmidt	

Examiner Signature	/Lawrence Williams/	Date Considered	09/03/2012

*EXAMINER: Initial if reference is considered, whether or not citation is in conformance and not considered. Include copy of this form with next communication to applicant.

Substitute for form 1449A/PTO				Complete if Known	
INFORMATION DISCLOSURE STATEMENT BY APPLICANT				Application Number	13/439,605
				Filing Date	04/04/2012
				First Named Inventor	Marcos C. Tzannes
				Art Unit	2611
				Examiner Name	Not Yet Assigned
Sheet	2	of	4	Attorney Docket Number	5550-47-CON-DIV-CON-2

/L.W./	33	2006/0140288	06/29/2006	Holden	
/L.W./	34	2010/0190507	07/29/2010	Karabinis et al.	
/L.W./	35	2012/0044977	02/23/2012	Tzannes	
/L.W./	36	2012/0069878	03/22/2012	Tzannes	

FOREIGN PATENT DOCUMENTS

Examiner Initials*	Cite No.[1]	Foreign Patent Document Country Code[3]; Number[4]; Kind Code[5] *(if known)*	Publication Date MM-DD-YYYY	Name of Patentee or Applicant of Cited Document	Pages, Columns, Lines, Where Relevant Passages or Relevant Figures Appear	T[6]
/L.W./	37	EP 0584534	03/02/1994	ALCATEL ITALIA		
/L.W./	38	EP 0719004	06/26/1996	MATSUSHITA ELECTRIC IND CO LTD		
/L.W./	39	GB 2330491	04/21/1999	BRITISH BROADCASTING CORP		
/L.W./	40	JP H10(1998)-084329	03/31/1998	NIPPON HOSO KYOKAI		(Translated Abstract and partial translation)
/L.W./	41	JP H08(1996)-321820	12/03/1996	MATSUSHITA ELECTRIC IND CO LTD		(Translated Abstract)
/L.W./	42	WO 98/32065	07/23/1998	FORTRESS TECHNOLOGIES INC		
/L.W./	43	WO 99/22463	05/06/1999	MOTOROLA INC		
/L.W./	44	WO 99/29078	06/10/1999	TELIA AB		

Examiner Signature	/Lawrence Williams/	Date Considered	09/03/2012

*EXAMINER: Initial if reference is considered, whether or not citation is in conformance and not considered. Include copy of this form with next communication to applicant.

Substitute for form 1449A/PTO				Complete if Known	
INFORMATION DISCLOSURE STATEMENT BY APPLICANT				Application Number	13/439,605
				Filing Date	04/04/2012
				First Named Inventor	Marcos C. Tzannes
				Art Unit	2611
				Examiner Name	Not Yet Assigned
Sheet	3	of	4	Attorney Docket Number	5550-47-CON-DIV-CON-2

OTHER ART (Including Author, Title, Date, Pertinent Pages, etc.)		
Examiner Initials*	Cite No.[1]	
/L.W./	45	BÄUML et al., "Reducing The Peak-To-Average Power Ratio Of Multicarrier Modulation By Selected Mapping," Electronics Letters, GB, IEE Stevenage, Vol. 32(22), Oct. 24, 1996, pp. 2056-2057, XP000643915 ISSN: 0013-5194
/L.W./	46	HENKEL, "Analog Codes for Peak-to-Average Ratio Reduction," in Proceedings 3rd ITG Conf. Source and Channel Coding, Munich, Germany, Jan. 2000, 5 pages
/L.W./	47	NARAHASHI et al., "New phasing scheme of N multiple carriers for reducing peak-to-average power ratio," Electronics Letters, Aug. 1994, Vol. 30(17), pp. 1382-83
/L.W./	48	TELLADO et al., "Revisiting DMT's Peak-to-Average Ratio," Antwerp, Apr. 20-24, 1998, pp. 1-14
/L.W./	49	TELLAMBURA, "A coding technique for reducing peak-to-average power ratio in OFDM," In the Proceedings of Global Telecommunications Conference, IEEE, Nov. 1998, pp. 2783-2787
/L.W./	50	TELLAMBURA, "Phase optimisation criterion for reducing peak-to-average power ratio in OFDM," Electronics Letters, Jan. 1998, Vol. 34(2), pp. 169-170
/L.W./	51	VAN EETVELT et al., "Peak to average power reduction for OFDM schemes by selective scrambling," Electronics Letters, Oct. 1996, Vol. 32(21), pp. 1963-64
/L.W./	52	Invitation to Pay Additional Fees for International (PCT) Patent Application No. PCT/US00/30958, mailed March 23, 2001 (Attorney Ref. No. 5550-47-PCT)
/L.W./	53	Invitation to Restrict or to Pay Additional Fees for International (PCT) Patent Application No. PCT/US00/30958, mailed Nov. 14, 2001 (Attorney Ref. No. 5550-47-PCT)
/L.W./	54	Copy of Annex to Form PCT/ISA/206 for PCT/US00/30958, Mar. 23, 2001, 3 pages (5550-47-PCT)
/L.W./	55	International Search Report for International (PCT) Patent Application No. PCT/US00/30958, mailed Jun. 12, 2001 (Attorney Ref. No. 5550-47-PCT)
/L.W./	56	International Preliminary Examination Report for International (PCT) Patent Application No. PCT/US00/30958, completed March 4, 2002 (Attorney Ref. No. 5550-47-PCT)
/L.W./	57	Written Opinion for International (PCT) Patent Application No. PCT/US00/30958, mailed Dec. 18, 2001 (Attorney Ref. No. 5550-47-PCT)
/L.W./	58	Notification of Reasons for Refusal (including translation) for Japanese Patent Application No. 2001-537217, date of dispatch, Mar. 3, 2008 (Attorney Ref. No. 5550-47-PJP)

Examiner Signature	/Lawrence Williams/	Date Considered	09/03/2012

*EXAMINER: Initial if reference is considered, whether or not citation is in conformance and not considered. Include copy of this form with next communication to applicant.

Substitute for form 1449A/PTO				Complete if Known	
INFORMATION DISCLOSURE STATEMENT BY APPLICANT				Application Number	13/439,605
				Filing Date	04/04/2012
				First Named Inventor	Marcos C. Tzannes
				Art Unit	2611
				Examiner Name	Not Yet Assigned
Sheet	4	of	4	Attorney Docket Number	5550-47-CON-DIV-CON-2

/L.W./	59	Decision of Refusal (including translation) for Japanese Patent Application No. 2001-537217, date of dispatch, Nov. 4, 2008 (Attorney Ref. No. 5550-47-PJP)
/L.W./	60	Notice of Preliminary Rejection (translation only) for Korean Patent Application No. 7005830/2002 dated Nov. 22, 2006 (Attorney Ref. No. 5550-47-PKR)
/L.W./	61	Official Action for U.S. Patent Application No. 09/710,310, mailed May 4, 2004 (Attorney Ref. No. 5550-47)
/L.W./	62	Notice of Allowance for U.S. Patent Application No. 09/710,310, mailed Jul 5, 2005 (Attorney Ref. No. 5550-47)
/L.W./	63	Notice of Allowance for U.S. Patent Application No. 11/211,535, mailed Sep. 6, 2007 (Attorney Ref. No. 5550-47-CON)
/L.W./	64	Notice of Allowance for U.S. Patent Application No. 11/860,080, mailed Oct. 17, 2011 (Attorney Ref. No. 5550-47-CON-DIV)
/L.W./	65	Notice of Allowance for U.S. Patent Application No. 13/284,549, mailed March 20, 2012 (Attorney Ref. No. 5550-47-CON-DIV-CON)
/L.W./	66	Official Action for U.S. Patent Application No. 11/863,581, mailed Feb. 6, 2008 (Attorney Ref. No. 5550-47-CON-2)
/L.W./	67	Notice of Allowance for U.S. Patent Application No. 11/863,581, mailed Oct. 8, 2008 (Attorney Ref. No. 5550-47-CON-2)
/L.W./	68	Official Action for U.S. Patent Application No. 12/255,713, mailed Oct. 15, 2009 (Attorney Ref. No. 5550-47-CON-3)
/L.W./	69	Notice of Allowance for U.S. Patent Application No. 12/255,713, mailed May 18, 2010 (Attorney Ref. No. 5550-47-CON-3)
/L.W./	70	Notice of Allowance for U.S. Patent Application No. 12/783,725, mailed Nov. 17, 2011 (Attorney Ref. No. 5550-47-CON-4)

Examiner Signature	/Lawrence Williams/	Date Considered	09/03/2012

*EXAMINER: Initial if reference is considered, whether or not citation is in conformance and not considered. Include copy of this form with next communication to applicant.

Doc Code: DIST.E.FILE **Document Description: Electronic Terminal Disclaimer - Filed**	PTO/SB/26 U.S. Patent and Trademark Office Department of Commerce

Electronic Petition Request	**TERMINAL DISCLAIMER TO OBVIATE A DOUBLE PATENTING REJECTION OVER A "PRIOR" PATENT**
Application Number	13439605
Filing Date	04-Apr-2012
First Named Inventor	Marcos Tzannes
Attorney Docket Number	5550-47-CON-DIV-CON-2
Title of Invention	SYSTEM AND METHOD FOR DESCRAMBLING THE PHASE OF CARRIERS IN A MULTICARRIER COMMUNICATIONS SYSTEM

☒ Filing of terminal disclaimer does not obviate requirement for response under 37 CFR 1.111 to outstanding Office Action

☒ This electronic Terminal Disclaimer is not being used for a Joint Research Agreement.

Owner	Percent Interest
Aware, Inc.	100%

The owner(s) with percent interest listed above in the instant application hereby disclaims, except as provided below, the terminal part of the statutory term of any patent granted on the instant application which would extend beyond the expiration date of the full statutory term of prior patent number(s)

8218610

as the term of said prior patent is presently shortened by any terminal disclaimer. The owner hereby agrees that any patent so granted on the instant application shall be enforceable only for and during such period that it and the prior patent are commonly owned. This agreement runs with any patent granted on the instant application and is binding upon the grantee, its successors or assigns.

In making the above disclaimer, the owner does not disclaim the terminal part of the term of any patent granted on the instant application that would extend to the expiration date of the full statutory term of the prior patent, "as the term of said prior patent is presently shortened by any terminal disclaimer," in the event that said prior patent later:
- expires for failure to pay a maintenance fee;
- is held unenforceable;
- is found invalid by a court of competent jurisdiction;
- is statutorily disclaimed in whole or terminally disclaimed under 37 CFR 1.321;
- has all claims canceled by a reexamination certificate;
- is reissued; or
- is in any manner terminated prior to the expiration of its full statutory term as presently shortened by any terminal disclaimer.

◉ Terminal disclaimer fee under 37 CFR 1.20(d) is included with Electronic Terminal Disclaimer request.

○	I certify, in accordance with 37 CFR 1.4(d)(4), that the terminal disclaimer fee under 37 CFR 1.20(d) required for this terminal disclaimer has already been paid in the above-identified application.

○ Applicant claims SMALL ENTITY status. See 37 CFR 1.27.

○ Applicant is no longer claiming SMALL ENTITY status. See 37 CFR 1.27(g)(2).

○ Applicant(s) status remains as SMALL ENTITY.

◉ Applicant(s) status remains as other than SMALL ENTITY.

I hereby declare that all statements made herein of my own knowledge are true and that all statements made on information and belief are believed to be true; and further that these statements were made with the knowledge that willful false statements and the like so made are punishable by fine or imprisonment, or both, under Section 1001 of Title 18 of the United States Code and that such willful false statements may jeopardize the validity of the application or any patent issued thereon.

THIS PORTION MUST BE COMPLETED BY THE SIGNATORY OR SIGNATORIES

I certify, in accordance with 37 CFR 1.4(d)(4) that I am:

◉ An attorney or agent registered to practice before the Patent and Trademark Office who is of record in this application

Registration Number 45285

○ A sole inventor

○ A joint inventor; I certify that I am authorized to sign this submission on behalf of all of the inventors

○ A joint inventor; all of whom are signing this request

○ The assignee of record of the entire interest that has properly made itself of record pursuant to 37 CFR 3.71

Signature	/Jason H. Vick/
Name	Jason H. Vick

*Statement under 37 CFR 3.73(b) is required if terminal disclaimer is signed by the assignee (owner).
Form PTO/SB/96 may be used for making this certification. See MPEP § 324.

Electronic Patent Application Fee Transmittal

Application Number:	13439605
Filing Date:	04-Apr-2012
Title of Invention:	SYSTEM AND METHOD FOR DESCRAMBLING THE PHASE OF CARRIERS IN A MULTICARRIER COMMUNICATIONS SYSTEM
First Named Inventor/Applicant Name:	Marcos C. Tzannes
Filer:	Jason Vick/Joanne Vos
Attorney Docket Number:	5550-47-CON-DIV-CON-2

Filed as Large Entity

Utility under 35 USC 111(a) Filing Fees

Description	Fee Code	Quantity	Amount	Sub-Total in USD($)
Basic Filing:				
Statutory or terminal disclaimer	1814	1	160	160
Pages:				
Claims:				
Miscellaneous-Filing:				
Petition:				
Patent-Appeals-and-Interference:				
Post-Allowance-and-Post-Issuance:				
Extension-of-Time:				

Description	Fee Code	Quantity	Amount	Sub-Total in USD($)
Miscellaneous:				
		Total in USD ($)		**160**

Doc Code: DISQ.E.FILE
Document Description: Electronic Terminal Disclaimer – Approved

Application No.: 13439605

Filing Date: 04-Apr-2012

Applicant/Patent under Reexamination: Tzannes et al.

Electronic Terminal Disclaimer filed on September 5, 2012

☒ APPROVED

This patent is subject to a terminal disclaimer

☐ DISAPPROVED

Approved/Disapproved by: Electronic Terminal Disclaimer automatically approved by EFS-Web

U.S. Patent and Trademark Office

Electronic Acknowledgement Receipt	
EFS ID:	13661223
Application Number:	13439605
International Application Number:	
Confirmation Number:	4069
Title of Invention:	SYSTEM AND METHOD FOR DESCRAMBLING THE PHASE OF CARRIERS IN A MULTICARRIER COMMUNICATIONS SYSTEM
First Named Inventor/Applicant Name:	Marcos C. Tzannes
Customer Number:	62574
Filer:	Jason Vick/Joanne Vos
Filer Authorized By:	Jason Vick
Attorney Docket Number:	5550-47-CON-DIV-CON-2
Receipt Date:	05-SEP-2012
Filing Date:	04-APR-2012
Time Stamp:	13:58:32
Application Type:	Utility under 35 USC 111(a)

Payment information:

Submitted with Payment	yes
Payment Type	Deposit Account
Payment was successfully received in RAM	$160
RAM confirmation Number	220
Deposit Account	191970
Authorized User	
The Director of the USPTO is hereby authorized to charge indicated fees and credit any overpayment as follows: Charge any Additional Fees required under 37 C.F.R. Section 1.16 (National application filing, search, and examination fees) Charge any Additional Fees required under 37 C.F.R. Section 1.17 (Patent application and reexamination processing fees)	

Charge any Additional Fees required under 37 C.F.R. Section 1.19 (Document supply fees)

Charge any Additional Fees required under 37 C.F.R. Section 1.21 (Miscellaneous fees and charges)

File Listing:

Document Number	Document Description	File Name	File Size(Bytes)/ Message Digest	Multi Part /.zip	Pages (if appl.)
1	Electronic Terminal Disclaimer-Filed	eTerminal-Disclaimer.pdf	33680 b8b8ff420f8a2ab323667b80a50364d8c62c1d2c	no	2
Warnings:					
Information:					
2	Fee Worksheet (SB06)	fee-info.pdf	30543 afee680d1b5fd0ee22012734a73d2a4a60f71538	no	2
Warnings:					
Information:					
		Total Files Size (in bytes):	64223		

This Acknowledgement Receipt evidences receipt on the noted date by the USPTO of the indicated documents, characterized by the applicant, and including page counts, where applicable. It serves as evidence of receipt similar to a Post Card, as described in MPEP 503.

New Applications Under 35 U.S.C. 111
If a new application is being filed and the application includes the necessary components for a filing date (see 37 CFR 1.53(b)-(d) and MPEP 506), a Filing Receipt (37 CFR 1.54) will be issued in due course and the date shown on this Acknowledgement Receipt will establish the filing date of the application.

National Stage of an International Application under 35 U.S.C. 371
If a timely submission to enter the national stage of an international application is compliant with the conditions of 35 U.S.C. 371 and other applicable requirements a Form PCT/DO/EO/903 indicating acceptance of the application as a national stage submission under 35 U.S.C. 371 will be issued in addition to the Filing Receipt, in due course.

New International Application Filed with the USPTO as a Receiving Office
If a new international application is being filed and the international application includes the necessary components for an international filing date (see PCT Article 11 and MPEP 1810), a Notification of the International Application Number and of the International Filing Date (Form PCT/RO/105) will be issued in due course, subject to prescriptions concerning national security, and the date shown on this Acknowledgement Receipt will establish the international filing date of the application.

UNITED STATES PATENT AND TRADEMARK OFFICE

UNITED STATES DEPARTMENT OF COMMERCE
United States Patent and Trademark Office
Address: COMMISSIONER FOR PATENTS
P.O. Box 1450
Alexandria, Virginia 22313-1450
www.uspto.gov

APPLICATION NUMBER	FILING OR 371(C) DATE	FIRST NAMED APPLICANT	ATTY. DOCKET NO./TITLE
13/439,605	04/04/2012	Marcos C. Tzannes	5550-47-CON-DIV-CON-2

CONFIRMATION NO. 4069

62574
Jason H. Vick
Sheridan Ross, PC
Suite # 1200
1560 Broadway
Denver, CO 80202

PUBLICATION NOTICE

OC000000055739489

Title:SYSTEM AND METHOD FOR DESCRAMBLING THE PHASE OF CARRIERS IN A MULTICARRIER COMMUNICATIONS SYSTEM

Publication No.US-2012-0195353-A1
Publication Date:08/02/2012

NOTICE OF PUBLICATION OF APPLICATION

The above-identified application will be electronically published as a patent application publication pursuant to 37 CFR 1.211, et seq. The patent application publication number and publication date are set forth above.

The publication may be accessed through the USPTO's publically available Searchable Databases via the Internet at www.uspto.gov. The direct link to access the publication is currently http://www.uspto.gov/patft/.

The publication process established by the Office does not provide for mailing a copy of the publication to applicant. A copy of the publication may be obtained from the Office upon payment of the appropriate fee set forth in 37 CFR 1.19(a)(1). Orders for copies of patent application publications are handled by the USPTO's Office of Public Records. The Office of Public Records can be reached by telephone at (703) 308-9726 or (800) 972-6382, by facsimile at (703) 305-8759, by mail addressed to the United States Patent and Trademark Office, Office of Public Records, Alexandria, VA 22313-1450 or via the Internet.

In addition, information on the status of the application, including the mailing date of Office actions and the dates of receipt of correspondence filed in the Office, may also be accessed via the Internet through the Patent Electronic Business Center at www.uspto.gov using the public side of the Patent Application Information and Retrieval (PAIR) system. The direct link to access this status information is currently http://pair.uspto.gov/. Prior to publication, such status information is confidential and may only be obtained by applicant using the private side of PAIR.

Further assistance in electronically accessing the publication, or about PAIR, is available by calling the Patent Electronic Business Center at 1-866-217-9197.

Office of Data Managment, Application Assistance Unit (571) 272-4000, or (571) 272-4200, or 1-888-786-0101

UNITED STATES PATENT AND TRADEMARK OFFICE

UNITED STATES DEPARTMENT OF COMMERCE
United States Patent and Trademark Office
Address: COMMISSIONER FOR PATENTS
P.O. Box 1450
Alexandria, Virginia 22313-1450
www.uspto.gov

APPLICATION NUMBER	FILING or 371(c) DATE	GRP ART UNIT	FIL FEE REC'D	ATTY.DOCKET.NO	TOT CLAIMS	IND CLAIMS
13/439,605	04/04/2012	2611	1910	5550-47-CON-DIV-CON-2	31	3

CONFIRMATION NO. 4069

62574
Jason H. Vick
Sheridan Ross, PC
Suite # 1200
1560 Broadway
Denver, CO 80202

FILING RECEIPT

OC000000053777972

Date Mailed: 04/23/2012

Receipt is acknowledged of this non-provisional patent application. The application will be taken up for examination in due course. Applicant will be notified as to the results of the examination. Any correspondence concerning the application must include the following identification information: the U.S. APPLICATION NUMBER, FILING DATE, NAME OF APPLICANT, and TITLE OF INVENTION. Fees transmitted by check or draft are subject to collection. Please verify the accuracy of the data presented on this receipt. **If an error is noted on this Filing Receipt, please submit a written request for a Filing Receipt Correction. Please provide a copy of this Filing Receipt with the changes noted thereon. If you received a "Notice to File Missing Parts" for this application, please submit any corrections to this Filing Receipt with your reply to the Notice. When the USPTO processes the reply to the Notice, the USPTO will generate another Filing Receipt incorporating the requested corrections**

Applicant(s)

Marcos C. Tzannes, Orinda, CA;

Assignment For Published Patent Application

AWARE, INC., Bedford, MA

Power of Attorney: The patent practitioners associated with Customer Number 62574

Domestic Priority data as claimed by applicant

This application is a CON of 13/284,549 10/28/2011
which is a CON of 11/860,080 09/24/2007 PAT 8073041
which is a DIV of 11/211,535 08/26/2005 PAT 7292627
which is a CON of 09/710,310 11/09/2000 PAT 6961369
which claims benefit of 60/164,134 11/09/1999

Foreign Applications (You may be eligible to benefit from the **Patent Prosecution Highway** program at the USPTO. Please see http://www.uspto.gov for more information.)

If Required, Foreign Filing License Granted: 04/17/2012

The country code and number of your priority application, to be used for filing abroad under the Paris Convention, is **US 13/439,605**

Projected Publication Date: 08/02/2012

Non-Publication Request: No

Early Publication Request: No

Title

SYSTEM AND METHOD FOR DESCRAMBLING THE PHASE OF CARRIERS IN A MULTICARRIER COMMUNICATIONS SYSTEM

Preliminary Class

375

PROTECTING YOUR INVENTION OUTSIDE THE UNITED STATES

Since the rights granted by a U.S. patent extend only throughout the territory of the United States and have no effect in a foreign country, an inventor who wishes patent protection in another country must apply for a patent in a specific country or in regional patent offices. Applicants may wish to consider the filing of an international application under the Patent Cooperation Treaty (PCT). An international (PCT) application generally has the same effect as a regular national patent application in each PCT-member country. The PCT process **simplifies** the filing of patent applications on the same invention in member countries, but **does not result** in a grant of "an international patent" and does not eliminate the need of applicants to file additional documents and fees in countries where patent protection is desired.

Almost every country has its own patent law, and a person desiring a patent in a particular country must make an application for patent in that country in accordance with its particular laws. Since the laws of many countries differ in various respects from the patent law of the United States, applicants are advised to seek guidance from specific foreign countries to ensure that patent rights are not lost prematurely.

Applicants also are advised that in the case of inventions made in the United States, the Director of the USPTO must issue a license before applicants can apply for a patent in a foreign country. The filing of a U.S. patent application serves as a request for a foreign filing license. The application's filing receipt contains further information and guidance as to the status of applicant's license for foreign filing.

Applicants may wish to consult the USPTO booklet, "General Information Concerning Patents" (specifically, the section entitled "Treaties and Foreign Patents") for more information on timeframes and deadlines for filing foreign patent applications. The guide is available either by contacting the USPTO Contact Center at 800-786-9199, or it can be viewed on the USPTO website at http://www.uspto.gov/web/offices/pac/doc/general/index.html.

For information on preventing theft of your intellectual property (patents, trademarks and copyrights), you may wish to consult the U.S. Government website, http://www.stopfakes.gov. Part of a Department of Commerce initiative, this website includes self-help "toolkits" giving innovators guidance on how to protect intellectual property in specific countries such as China, Korea and Mexico. For questions regarding patent enforcement issues, applicants may call the U.S. Government hotline at 1-866-999-HALT (1-866-999-4158).

LICENSE FOR FOREIGN FILING UNDER

Title 35, United States Code, Section 184

Title 37, Code of Federal Regulations, 5.11 & 5.15

GRANTED

The applicant has been granted a license under 35 U.S.C. 184, if the phrase "IF REQUIRED, FOREIGN FILING LICENSE GRANTED" followed by a date appears on this form. Such licenses are issued in all applications where

the conditions for issuance of a license have been met, regardless of whether or not a license may be required as set forth in 37 CFR 5.15. The scope and limitations of this license are set forth in 37 CFR 5.15(a) unless an earlier license has been issued under 37 CFR 5.15(b). The license is subject to revocation upon written notification. The date indicated is the effective date of the license, unless an earlier license of similar scope has been granted under 37 CFR 5.13 or 5.14.

This license is to be retained by the licensee and may be used at any time on or after the effective date thereof unless it is revoked. This license is automatically transferred to any related applications(s) filed under 37 CFR 1.53(d). This license is not retroactive.

The grant of a license does not in any way lessen the responsibility of a licensee for the security of the subject matter as imposed by any Government contract or the provisions of existing laws relating to espionage and the national security or the export of technical data. Licensees should apprise themselves of current regulations especially with respect to certain countries, of other agencies, particularly the Office of Defense Trade Controls, Department of State (with respect to Arms, Munitions and Implements of War (22 CFR 121-128)); the Bureau of Industry and Security, Department of Commerce (15 CFR parts 730-774); the Office of Foreign AssetsControl, Department of Treasury (31 CFR Parts 500+) and the Department of Energy.

NOT GRANTED

No license under 35 U.S.C. 184 has been granted at this time, if the phrase "IF REQUIRED, FOREIGN FILING LICENSE GRANTED" DOES NOT appear on this form. Applicant may still petition for a license under 37 CFR 5.12, if a license is desired before the expiration of 6 months from the filing date of the application. If 6 months has lapsed from the filing date of this application and the licensee has not received any indication of a secrecy order under 35 U.S.C. 181, the licensee may foreign file the application pursuant to 37 CFR 5.15(b).

SelectUSA

The United States represents the largest, most dynamic marketplace in the world and is an unparalleled location for business investment, innovation and commercialization of new technologies. The USA offers tremendous resources and advantages for those who invest and manufacture goods here. Through SelectUSA, our nation works to encourage, facilitate, and accelerate business investment. To learn more about why the USA is the best country in the world to develop technology, manufacture products, and grow your business, visit SelectUSA.gov.

PATENT APPLICATION FEE DETERMINATION RECORD

Substitute for Form PTO-875

Application or Docket Number: 13/439,605

APPLICATION AS FILED - PART I

FOR	(Column 1) NUMBER FILED	(Column 2) NUMBER EXTRA	SMALL ENTITY RATE($)	SMALL ENTITY FEE($)	OR	OTHER THAN SMALL ENTITY RATE($)	OTHER THAN SMALL ENTITY FEE($)
BASIC FEE (37 CFR 1.16(a), (b), or (c))	N/A	N/A	N/A			N/A	380
SEARCH FEE (37 CFR 1.16(k), (i), or (m))	N/A	N/A	N/A			N/A	620
EXAMINATION FEE (37 CFR 1.16(o), (p), or (q))	N/A	N/A	N/A			N/A	250
TOTAL CLAIMS (37 CFR 1.16(i))	31 minus 20 =	* 11			OR	x 60 =	660
INDEPENDENT CLAIMS (37 CFR 1.16(h))	3 minus 3 =	*				x 250 =	0.00
APPLICATION SIZE FEE (37 CFR 1.16(s))	If the specification and drawings exceed 100 sheets of paper, the application size fee due is $310 ($155 for small entity) for each additional 50 sheets or fraction thereof. See 35 U.S.C. 41(a)(1)(G) and 37 CFR 1.16(s).						0.00
MULTIPLE DEPENDENT CLAIM PRESENT (37 CFR 1.16(j))							0.00
* If the difference in column 1 is less than zero, enter "0" in column 2.			TOTAL			TOTAL	1910

APPLICATION AS AMENDED - PART II

		(Column 1) CLAIMS REMAINING AFTER AMENDMENT		(Column 2) HIGHEST NUMBER PREVIOUSLY PAID FOR	(Column 3) PRESENT EXTRA	SMALL ENTITY RATE($)	SMALL ENTITY ADDITIONAL FEE($)	OR	OTHER THAN SMALL ENTITY RATE($)	OTHER THAN SMALL ENTITY ADDITIONAL FEE($)
AMENDMENT A	Total (37 CFR 1.16(i))	*	Minus	**	=	x =		OR	x =	
	Independent (37 CFR 1.16(h))	*	Minus	***	=	x =		OR	x =	
	Application Size Fee (37 CFR 1.16(s))									
	FIRST PRESENTATION OF MULTIPLE DEPENDENT CLAIM (37 CFR 1.16(j))							OR		
						TOTAL ADD'L FEE		OR	TOTAL ADD'L FEE	

		(Column 1) CLAIMS REMAINING AFTER AMENDMENT		(Column 2) HIGHEST NUMBER PREVIOUSLY PAID FOR	(Column 3) PRESENT EXTRA	SMALL ENTITY RATE($)	SMALL ENTITY ADDITIONAL FEE($)	OR	OTHER THAN SMALL ENTITY RATE($)	OTHER THAN SMALL ENTITY ADDITIONAL FEE($)
AMENDMENT B	Total (37 CFR 1.16(i))	*	Minus	**	=	x =		OR	x =	
	Independent (37 CFR 1.16(h))	*	Minus	***	=	x =		OR	x =	
	Application Size Fee (37 CFR 1.16(s))									
	FIRST PRESENTATION OF MULTIPLE DEPENDENT CLAIM (37 CFR 1.16(j))							OR		
						TOTAL ADD'L FEE		OR	TOTAL ADD'L FEE	

* If the entry in column 1 is less than the entry in column 2, write "0" in column 3.

** If the "Highest Number Previously Paid For" IN THIS SPACE is less than 20, enter "20".

*** If the "Highest Number Previously Paid For" IN THIS SPACE is less than 3, enter "3".

The "Highest Number Previously Paid For" (Total or Independent) is the highest found in the appropriate box in column 1.

UNITED STATES PATENT AND TRADEMARK OFFICE

UNITED STATES DEPARTMENT OF COMMERCE
United States Patent and Trademark Office
Address: COMMISSIONER FOR PATENTS
P.O. Box 1450
Alexandria, Virginia 22313-1450
www.uspto.gov

APPLICATION NUMBER	FILING OR 371(C) DATE	FIRST NAMED APPLICANT	ATTY. DOCKET NO./TITLE
13/439,605	04/04/2012	Marcos C. Tzannes	5550-47-CON-DIV-CON-2

CONFIRMATION NO. 4069

POA ACCEPTANCE LETTER

62574
Jason H. Vick
Sheridan Ross, PC
Suite # 1200
1560 Broadway
Denver, CO 80202

OC000000053777995

Date Mailed: 04/23/2012

NOTICE OF ACCEPTANCE OF POWER OF ATTORNEY

This is in response to the Power of Attorney filed 04/04/2012.

The Power of Attorney in this application is accepted. Correspondence in this application will be mailed to the above address as provided by 37 CFR 1.33.

/gmihtsun/

Office of Data Management, Application Assistance Unit (571) 272-4000, or (571) 272-4200, or 1-888-786-0101

IN THE UNITED STATES PATENT AND TRADEMARK OFFICE

In Re the Application of: Marcos C. Tzannes	)	Group Art Unit:
Application No.:	)	Examiner:
Filed: Herewith	)	Confirmation No.:
Atty. File No.: 5550-47-CON-DIV-CON-2	)	

For: SYSTEM AND METHOD FOR DESCRAMBLING THE PHASE OF CARRIERS IN A MULTICARRIER COMMUNICATIONS SYSTEM

Commissioner for Patents
P.O. Box 1450
Alexandria, VA 22313

PRELIMINARY AMENDMENT

Dear Sir:

Prior to the initial review of the above-identified patent application by the Examiner, please enter the following Preliminary Amendment. Although Applicants do not believe that any fees are due based upon the filing of this Preliminary Amendment, please charge any such fees to Deposit Account 19-1970.

Please amend the above-identified patent application as follows:

Amendments to the Specification begin on page 2 of this paper.

Amendments to the Drawings begin on page 3 of this paper and include both an attached replacement sheet and an annotated sheet showing changes.

Amendments to the Claims are shown in the listing of claims which begin on page 4 of this paper.

Remarks begin on page 9 of this paper.

DISH
Exhibit 1003 Page 90

AMENDMENTS TO THE SPECIFICATION

Submitted herewith is a marked-up and clean version of a substitute specification. No new matter is believed to have been added therein.

DISH
Exhibit 1003 Page 91

AMENDMENTS TO THE DRAWINGS:

The attached drawing sheet(s) include(s) changes to Figure 1. This sheet, which includes Figure 1, replaces the originally submitted sheet.

DISH
Exhibit 1003 Page 92

AMENDMENTS TO THE CLAIMS

This listing of claims will replace all prior versions, and listings, of claims in the application.

Listing of Claims:

1-20. (Cancelled)

21. (New) A method, in a first transceiver that uses a plurality of carrier signals for receiving a bit stream that was transmitted by a second transceiver, wherein each carrier signal has a phase characteristic associated with the bit stream, comprising:

receiving the bit stream from the second transceiver, wherein:

each carrier signal is associated with a value determined independently of any bit value of the bit stream carried by that respective carrier signal, the value associated with each carrier signal determined by a pseudo-random number generator,

a phase shift for each carrier signal is at least based on:

the value associated with that carrier signal, and

the combining of a phase for each carrier signal with the phase characteristic of that respective carrier signal so as to substantially scramble the phase characteristics of the plurality of carrier signals, and

multiple carrier signals corresponding to the plurality of phase shifted and scrambled carrier signals are used by the first transceiver to demodulate a same bit value of the received bit stream; and

wherein:

the first and second transceivers communicate over one or more of a pair of twisted wires of a telephone subscriber line, fiber optic and wireless, and

the first and second transceivers transport one or more applications.

22. (New) The method of claim 21, wherein the first transceiver is a cable transceiver.

23. (New) The method of claim 21, wherein the first transceiver is VDSL transceiver.

DISH
Exhibit 1003 Page 93

24. (New) The method of claim 21, wherein the first and second transceivers are multicarrier DSL transceivers.

25. (New) The method of claim 21, wherein the first and second transceivers are used for high speed internet access.

26. (New) The method of claim 21, further comprising, in the second transceiver, independently deriving the values associated with each carrier using a second pseudo-random number generator in the second transceiver.

27. (New) The method of claim 26, wherein the first and second transceivers use a same seed for the pseudo-random number generator.

28. (New) The method of claim 26, wherein the first and second transceivers are wireless transceivers.

29. (New) The method of claim 26, wherein the first and second transceivers are cable transceivers.

30. (New) The method of claim 26, wherein the first and second transceivers are DSL transceivers connected using a pair of twisted wires of a telephone subscriber system.

31. (New) The method of claim 30, wherein the first and second transceivers are VDSL transceivers.

32. (New) The method of claim 26, wherein the first and second transceivers are multicarrier DSL transceivers.

33. (New) The method of claim 26, wherein the first and second transceivers are also used for transport high speed internet access.

DISH
Exhibit 1003 Page 94

34. (New) A communication system including a first transceiver that uses a plurality of carrier signals for receiving a bit stream that was transmitted by a second transceiver, wherein each carrier signal has a phase characteristic associated with the bit stream, the transceiver capable of receiving from the second transceiver the bit stream, wherein:

each carrier signal is associated with a value determined independently of any bit value of the bit stream carried by that respective carrier signal, the value associated with each carrier signal determined by a pseudo-random number generator,

a phase shift for each carrier signal is at least based on:

the value associated with that respective carrier signal, and

the combining of a phase shift for each carrier signal with the phase characteristic of that respective carrier signal so as to substantially scramble the phase characteristics of the plurality of carrier signals, and

multiple carrier signals corresponding to the plurality of phase shifted and scrambled carrier signals are used by the first transceiver to demodulate a same bit value of the received bit stream; and

wherein:

the first and second transceivers communicate over one or more of a pair of twisted wires of a telephone subscriber line, fiber optic and wireless, and

the first and second transceivers transport one or more applications.

35. (New) The system of claim 34, wherein the first transceiver is a cable transceiver.

36. (New) The system of claim 34, wherein the first transceiver is VDSL transceiver.

37. (New) The system of claim 34, wherein the first and second transceivers are multicarrier DSL transceivers.

38. (New) The system of claim 34, wherein the first and second transceivers are used for high speed internet access.

DISH
Exhibit 1003 Page 95

39. (New) The system of claim 34, further comprising the second transceiver independently deriving the values associated with each carrier using a second pseudo-random number generator in the second transceiver.

40. (New) The system of claim 39, wherein the first and second transceivers use a same seed for the pseudo-random number generator.

41. (New) The system of claim 39, wherein the first and second transceivers are wireless transceivers.

42. (New) The system of claim 39, wherein the first and second transceivers are cable transceivers.

43. (New) The system of claim 39, wherein the first and second transceivers are DSL transceivers connected using a pair of twisted wires of a telephone subscriber system.

44. (New) The system of claim 43, wherein the first and second transceivers are VDSL transceivers.

45. (New) The system of claim 39, wherein the first and second transceivers are multicarrier DSL transceivers.

46. (New) The system of claim 39, wherein the first and second transceivers are also used for high speed internet access.

47. (New) The method of claim 34, wherein the first and second transceivers each include a digital signal processor.

48. (New) The method of claim 21, wherein the first and second transceivers each include a digital signal processor.

DISH
Exhibit 1003 Page 96

49. (New) The method of claim 21, wherein the video is video-on demand.

50. (New) The method of claim 34, wherein the video is video-on demand.

51. (New) A method, in a first transceiver that uses a plurality of carrier signals for receiving a bit stream that was transmitted by a second transceiver, wherein each carrier signal has a phase characteristic associated with the bit stream, the method comprising:

receiving the bit stream from the second transceiver, wherein:

each carrier signal is associated with a value determined independently of any bit value of the bit stream carried by that respective carrier signal, the value associated with each carrier signal determined by a pseudo-random number generator,

a phase shift for each carrier signal is at least based on:

the value associated with that carrier signal, and

the combining of a phase for each carrier signal with the phase characteristic of that respective carrier signal so as to substantially scramble the phase characteristics of the plurality of carrier signals, and

multiple carrier signals corresponding to the plurality of phase shifted and scrambled carrier signals are used by the first transceiver to demodulate a same bit value of the received bit stream; and

wherein:

the first and second transceivers communicate over one or more of a pair of twisted wires of a telephone subscriber line, fiber optic and wireless, and

the first and second transceivers are used for one or more applications.

DISH
Exhibit 1003 Page 97

REMARKS/ARGUMENTS

By this amendment, claims 1-20 are canceled without prejudice or disclaimer and new claims 21-51 have been added. Additional, the specification and figures have been amended in a manner consistent with the parent application.

Applicant requests examination on the merits.

Applicant believes that the pending claims are in condition for allowance and such disposition is respectfully requested. In the event that a telephone conversation would further prosecution and/or expedite allowance, the Examiner is invited to contact the undersigned.

The Commissioner is hereby authorized to charge to Deposit Account No. 19-1970 any fees under 37 C.F.R. §§ 1.16 and 1.17 that may be required by this paper and to credit any overpayment to that Account. If any extension of time is required in connection with the filing of this paper and has not been separately requested, such extension is hereby Petitioned.

Respectfully submitted,

SHERIDAN ROSS P.C.

By: _____

Jason H. Vick
Registration No. 45,285
1560 Broadway, Suite 1200
Denver, Colorado 80202-5141
(303) 863-9700

Date: 4 Apr '12

A System and Method for Scrambling the Phase of the Carriers in a Multicarrier Communications System

Related Application

This application claims the benefit of the filing date of copending U.S. Provisional Application, Serial No. 60/164,134, filed November 9, 1999, entitled "A Method For Randomizing The Phase Of The Carriers In A Multicarrier Communications System To Reduce The Peak To Average Power Ratio Of The Transmitted Signal," the entirety of which provisional application is incorporated by reference herein.

Field of the Invention

This invention relates to communications systems using multicarrier modulation. More particularly, the invention relates to multicarrier communications systems that lower the peak-to-average power ratio (PAR) of transmitted signals.

Background of the Invention

In a conventional multicarrier communications system, transmitters communicate over a communication channel using multicarrier modulation or Discrete Multitone Modulation (DMT). Carrier signals (carriers) or sub-channels spaced within a usable frequency band of the communication channel are modulated at a symbol (i.e., block) transmission rate of the system. An input signal, which includes input data bits, is sent to a DMT transmitter, such as a DMT modem. The DMT transmitter typically modulates the phase characteristic, or phase, and amplitude of the

DISH
Exhibit 1003 Page 99

carrier signals using an Inverse Fast Fourier Transform (IFFT) to generate a time domain signal, or transmission signal, that represents the input signal. The DMT transmitter transmits the transmission signal, which is a linear combination of the multiple carriers, to a DMT receiver over the communication channel.

The phase and amplitude of the carrier signals of DMT transmission signal can be considered random because the phase and amplitude result from the modulation of an arbitrary sequence of input data bits comprising the transmitted information. Therefore, under the condition that the modulated data bit stream is random, the DMT transmission signal can be approximated as having a Gaussian probability distribution. A bit scrambler is often used in the DMT transmitter to scramble the input data bits before the bits are modulated to assure that the transmitted data bits are random and, consequently, that the modulation of those bits produces a DMT transmission signal with a Gaussian probability distribution.

With an appropriate allocation of transmit power levels to the carriers or sub-channels, such a system provides a desirable performance. Further, generating a transmission signal with a Gaussian probability distribution is important in order to transmit a transmission signal with a low peak-to-average ratio (PAR), or peak-to-average power ratio. The PAR of a transmission signal is the ratio of the instantaneous peak value (i.e., maximum magnitude) of a signal parameter (e.g., voltage, current, phase, frequency, power) to the time-averaged value of the signal parameter. In DMT systems, the PAR of the transmitted signal is determined by the probability of the random transmission signal reaching a certain peak voltage during the time interval required for a certain number of symbols. An example of the PAR of a transmission signal transmitted from a DMT transmitter is 14.5 dB, which is equivalent to having a 1E-7 probability of clipping. The PAR of a

DISH
Exhibit 1003 Page 100

transmission signal transmitted and received in a DMT communication system is an important consideration in the design of the DMT communication system because the PAR of a signal affects the communication system's total power consumption and component linearity requirements of the system.

If the phase of the modulated carriers is not random, then the PAR can increase greatly. Examples of cases where the phases of the modulated carrier signals are not random are when bit scramblers are not used, multiple carrier signals are used to modulate the same input data bits, and the constellation maps, which are mappings of input data bits to the phase of a carrier signal, used for modulation are not random enough (i.e., a zero value for a data bit corresponds to a 90 degree phase characteristic of the DMT carrier signal and a one value for a data bit corresponds to a -90 degree phase characteristic of the DMT carrier signal). An increased PAR can result in a system with high power consumption and/or with high probability of clipping the transmission signal. Thus, there remains a need for a system and method that can effectively scramble the phase of the modulated carrier signals in order to provide a low PAR for the transmission signal.

Summary of the Invention

The present invention features a system and method that scrambles the phase characteristics of the modulated carrier signals in a transmission signal. In one aspect, a value is associated with each carrier signal. A phase shift is computed for each carrier signal based on the value associated with that carrier signal. The value is determined independently of any input bit value carried by that carrier signal. The phase shift computed for each carrier signal is combined with the phase characteristic of that carrier signal to substantially scramble the phase characteristics of the carrier signals.

DISH
Exhibit 1003 Page 101

In one embodiment, the input bit stream is modulated onto the carrier signals having the substantially scrambled phase characteristic to produce a transmission signal with a reduced peak-to-average power ratio (PAR). The value is derived from a predetermined parameter, such as a random number generator, a carrier number, a DMT symbol count, a superframe count, and a hyperframe count. In another embodiment, a predetermined transmission signal is transmitted when the amplitude of the transmission signal exceeds a certain level.

In another aspect, the invention features a method wherein a value is associated with each carrier signal. The value is determined independently of any input bit value carried by that carrier signal. A phase shift for each carrier signal is computed based on the value associated with that carrier signal. The transmission signal is demodulated using the phase shift computed for each carrier signal.

In another aspect, the invention features a system comprising a phase scrambler that computes a phase shift for each carrier signal based on a value associated with that carrier signal. The phase scrambler also combines the phase shift computed for each carrier signal with the phase characteristic of that carrier signal to substantially scramble the phase characteristic of the carrier signals. In one embodiment, a modulator, in communication with the phase scrambler, modulates bits of an input signal onto the carrier signals having the substantially scrambled phase characteristics to produce a transmission signal with a reduced PAR.

Description of the Drawings

The invention is pointed out with particularity in the appended claims. The advantages of the invention described above, as well as further advantages of the invention, may be better understood

DISH
Exhibit 1003 Page 102

by reference to the following description taken in conjunction with the accompanying drawings, in which:

Fig. 1 is a block diagram of an embodiment of a digital subscriber line communications system including a DMT (discrete multitone modulation) transceiver, in communication with a remote transceiver, having a phase scrambler for substantially scrambling the phase characteristics of carrier signals; and

Fig. 2 is a flow diagram of an embodiment of a process for scrambling the phase characteristics of the carrier signals in a transmission signal.

Detailed Description

Fig. 1 shows a digital subscriber line (DSL) communication system 2 including a discrete multitone (DMT) transceiver 10 in communication with a remote transceiver 14 over a communication channel 18 using a transmission signal 38 having a plurality of carrier signals. The DMT transceiver 10 includes a DMT transmitter 22 and a DMT receiver 26. The remote transceiver 14 includes a transmitter 30 and a receiver 34. Although described with respect to discrete multitone modulation, the principles of the invention apply also to other types of multicarrier modulation, such as, but not limited to, orthogonally multiplexed quadrature amplitude modulation (OQAM), discrete wavelet multitone (DWMT) modulation, and orthogonal frequency division multiplexing (OFDM).

The communication channel 18 provides a downstream transmission path from the DMT transmitter 22 to the remote receiver 34, and an upstream transmission path from the remote transmitter 30 to the DMT receiver 26. In one embodiment, the communication channel 18 is a pair of twisted wires of a telephone subscriber line. In other embodiments, the communication channel 18 can be a fiber optic wire, a quad cable, consisting of two pairs of twisted wires, or a quad cable

DISH
Exhibit 1003 Page 103

that is one of a star quad cable, a Dieselhorst-Martin quad cable, and the like. In a wireless communication system wherein the transceivers 10, 14 are wireless modems, the communication channel 18 is the air through which the transmission signal 38 travels between the transceivers 10, 14.

By way of example, the DMT transmitter 22 shown in Fig. 1 includes a quadrature amplitude modulation (QAM) encoder 42, a modulator 46, a bit allocation table (BAT) 44, and a phase scrambler 66. The DMT transmitter 22 can also include a bit scrambler 74, as described further below. The remote transmitter 30 of the remote transceiver 14 comprises equivalent components as the DMT transmitter 22. Although this embodiment specifies a detailed description of the DMT transmitter 22, the inventive concepts apply also to the receivers 34, 36 which have similar components to that of the DMT transmitter 22, but perform inverse functions in a reverse order.

The QAM encoder 42 has a single input for receiving an input serial data bit stream 54 and multiple parallel outputs to transmit QAM symbols 58 generated by the QAM encoder 42 from the bit stream 54. In general, the QAM encoder 42 maps the input serial bit-stream 54 in the time domain into parallel QAM symbols 58 in the frequency domain. In particular, the QAM encoder 42 maps the input serial data bit stream 54 into N parallel quadrature amplitude modulation (QAM) constellation points 58, or QAM symbols 58, where N represents the number of carrier signals generated by the modulator 46. The BAT 44 is in communication with the QAM encoder 42 to specify the number of bits carried by each carrier signal. The QAM symbols 58 represent the amplitude and the phase characteristic of each carrier signal.

The modulator 46 provides functionality associated with the DMT modulation and transforms the QAM symbols 58 into DMT symbols 70 each comprised of a plurality of time-

DISH
Exhibit 1003 Page 104

domain samples. The modulator 46 modulates each carrier signal with a different QAM symbol 58. As a result of this modulation, carrier signals have phase and amplitude characteristics based on the QAM symbol 58 and therefore based on the input-bit stream 54. In particular, the modulator 46 uses an inverse fast Fourier transform (IFFT) to change the QAM symbols 58 into a transmission signal 38 comprised of a sequence of DMT symbols 70. The modulator 46 changes the QAM symbols 58 into DMT symbols 70 through modulation of the carrier signals. In another embodiment, the modulator 46 uses the inverse discrete Fourier transform (IDFT) to change the QAM symbols 58 into DMT symbols 70. In one embodiment, a pilot tone is included in the transmission signal 38 to provide a reference signal for coherent demodulation of the carrier signals in the remote receiver 34 during reception of the transmission signal 38.

The modulator 46 also includes a phase scrambler 66 that combines a phase shift computed for each QAM-modulated carrier signal with the phase characteristic of that carrier signal. Combining phase shifts with phase characteristics, in accordance with the principles of the invention, substantially scrambles the phase characteristics of the carrier signals in the transmission signal 38. By scrambling the phase characteristics of the carrier signals, the resulting transmission signal 38 has a substantially minimized peak-to-average (PAR) power ratio. The phase scrambler 66 can be part of or external to the modulator 46. Other embodiments of the phase scrambler 66 include, but are not limited to, a software program that is stored in local memory and is executed on the modulator 46, a digital signal processor (DSP) capable of performing mathematical functions and algorithms, and the like. The remote receiver 34 similarly includes a phase scrambler 66' for use when demodulating carrier signals that have had their phase characteristics adjusted by the phase scrambler 66 of the DMT transceiver 10.

DISH
Exhibit 1003 Page 105

To compute a phase shift for each carrier signal, the phase scrambler 66 associates one or more values with that carrier signal. The phase scrambler 66 determines each value for a carrier signal independently of the QAM symbols 58, and, therefore, independently of the bit value(s) modulated onto the carrier signal. The actual value(s) that the phase scrambler 66 associates with each carrier signal can be derived from one or more predefined parameters, such as a pseudo-random number generator (pseudo-RNG), a DMT carrier number, a DMT symbol count, a DMT superframe count, a DMT hyperframe count, and the like, as described in more detail below. Irrespective of the technique used to produce each value, the same technique is used by the DMT transmitter 22 and the remote receiver 34 so that the value associated with a given carrier signal is known at both ends of the communication channel 18.

The phase scrambler 66 then solves a predetermined equation to compute a phase shift for the carrier signal, using the value(s) associated with that carrier signal as input that effects the output of the equation. Any equation suitable for computing phase shifts can be used to compute the phase shifts. When the equation is independent of the bit values of the input serial bit stream 54, the computed phase shifts are also independent of such bit values.

In one embodiment (shown in phantom), the DMT transmitter 22 includes a bit scrambler 74, which receives the input serial bit stream 54 and outputs data bits 76 that are substantially scrambled. The substantially scrambled bits 76 are then passed to the QAM encoder 42. When the bit scrambler 74 is included in the DMT transmitter 22, the operation of the phase scrambler 66 further assures that the transmission signal 38 has a Gaussian probability distribution and, therefore, a substantially minimized PAR.

DISH
Exhibit 1003 Page 106

Fig. 2 shows embodiments of a process used by the DMT transmitter 22 for adjusting the phase characteristic of each carrier signal and combining these carrier signals to produce the transmission signal 38. The DMT transmitter 22 generates (step 100) a value that is associated with a carrier signal. Because the value is being used to alter the phase characteristics of the carrier signal, both the DMT transmitter 22 and the remote receiver 34 must recognize the value as being associated with the carrier signal. Either the DMT transmitter 22 and the remote receiver 34 independently derive the associated value, or one informs the other of the associated value. For example, in one embodiment the DMT transmitter 22 can derive the value from a pseudo-RNG and then transmit the generated value to the remote receiver 34. In another embodiment, the remote receiver 34 similarly derives the value from the same pseudo-RNG and the same seed as used by the transmitter (i.e., the transmitter pseudo-RNG produces the same series of random numbers as the receiver pseudo-RNG).

As another example, the DMT transmitter 22 and the remote receiver 34 can each maintain a symbol counter for counting DMT symbols. The DMT transmitter 22 increments its symbol counter upon transmitting a DMT symbol; the remote receiver 34 upon receipt. Thus, when the DMT transmitter 22 and the remote receiver 34 both use the symbol count as a value for computing phase shifts, both the DMT transmitter 22 and remote receiver 34 "know" that the value is associated with a particular DMT symbol and with each carrier signal of that DMT symbol.

Values can also be derived from other types of predefined parameters. For example, if the predefined parameter is the DMT carrier number, then the value associated with a particular carrier signal is the carrier number of that signal within the DMT symbol. The number of a carrier signal represents the location of the frequency of the carrier signal relative to the frequency of other carrier

DISH
Exhibit 1003 Page 107

signals within a DMT symbol. For example, in one embodiment the DSL communication system 2 provides 256 carrier signals, each separated by a frequency of 4.3125 kHz and spanning the frequency bandwidth from 0 kHz to 1104 kHz. The DMT transmitter 22 numbers the carrier signals from 0 to 255. Therefore, "DMT carrier number 50" represents the 51st DMT carrier signal which is located at the frequency of 215.625 kHz (i.e., 51 x 4.3125 kHz).

Again, the DMT transmitter 22 and the remote receiver 34 can know the value that is associated with the carrier signal because both the DMT transmitter 22 and the remote receiver 34 use the same predefined parameter (here, the DMT carrier number) to make the value-carrier signal association. In other embodiments (as exemplified above with the transmitter pseudo-RNG), the DMT transmitter 22 can transmit the value to the remote receiver 34 (or vice versa) over the communication channel 18.

In other embodiments, other predefined parameters can be used in conjunction with the symbol count. One example of such a predefined parameter is the superframe count that increments by one every 69 DMT symbols. One exemplary implementation that achieves the superframe counter is to perform a modulo 68 operation on the symbol count. As another example, the DMT transmitter 22 can maintain a hyperframe counter for counting hyperframes. An exemplary implementation of the hyperframe count is to perform a modulo 255 operation on the superframe count. Thus, the hyperframe count increments by one each time the superframe count reaches 255.

Accordingly, it is seen that some predefined parameters produce values that vary from carrier signal to carrier signal. For example, when the predefined parameter is the DMT carrier number, values vary based on the frequency of the carrier signal. As another example, the pseudo-RNG generates a new random value for each carrier signal.

Other predefined parameters produce values that vary from DMT symbol 70 to DMT symbol 70. For example, when the predefined parameter is the symbol count, the superframe count, or hyperframe count, values vary based on the numerical position of the DMT symbol 70 within a sequence of symbols, superframes, or hyperframes. Predefined parameters such as the pseudo-RNG, symbol count, superframe count, and superframe can also be understood to be parameters that vary values over time. Any one or combination of the predefined parameters can provide values for input to the equation that computes a phase shift for a given carrier signal.

In one embodiment, the phase scrambling is used to avoid clipping of the transmission signal 38 on a DMT symbol 70 by DMT symbol 70 basis. In this embodiment, the DMT transmitter 22 uses a value based on a predefined parameter that varies over time, such as the symbol count, to compute the phase shift. It is to be understood that other types of predefined parameters that vary the values associated with carrier signals can be used to practice the principles of the invention. As described above, the transceivers 10, 14 may communicate (step 110) the values to synchronize their use in modulating and demodulating the carrier signals.

The DMT transmitter 22 then computes (step 115) the phase shift that is used to adjust the phase characteristic of each carrier signal. The amount of the phase shift combined with the phase characteristic of each QAM-modulated carrier signal depends upon the equation used and the one or more values associated with that carrier signal.

The DMT transmitter 22 then combines (step 120) the phase shift computed for each carrier signal with the phase characteristic of that carrier signal. By scrambling the phase characteristics of the carrier signals, the phase scrambler 66 reduces (with respect to unscrambled phase characteristics) the combined PAR of the plurality of carrier signals and, consequently, the

DISH
Exhibit 1003 Page 109

transmission signal 38. The following three phase shifting examples, PS #1 – PS #3, illustrate methods used by the phase scrambler 66 to combine a computed phase shift to the phase characteristic of each carrier signal.

Phase Shifting Example #1

Phase shifting example #1 (PS #1) corresponds to adjusting the phase characteristic of the QAM-modulated carrier signal associated with a carrier number N by $N \times \frac{\pi}{3}$, modulo (mod) 2π. In this example, a carrier signal having a carrier number N equal to 50 has a phase shift added to the phase characteristic of that carrier signal equal to $50 \times \frac{\pi}{3} (\mathrm{mod}\, 2\pi) = \frac{2}{3}\pi$. The carrier signal with a carrier number N equal to 51 has a phase shift added to the phase characteristic of that carrier signal equal to $51 \times \frac{\pi}{3} (\mathrm{mod}\, 2\pi) = \pi$. The carrier signal with a carrier number N equal to 0 has no phase shift added to the phase characteristic of that carrier signal.

Phase Shifting Example #2

Phase shifting example #2 (PS #2) corresponds to adjusting the phase characteristic of the QAM-modulated carrier signal associated with a carrier number N by $(N + M) \times \frac{\pi}{4}$, mod 2π, where M is the symbol count. In this example, a carrier signal having a carrier number N equal to 50 on DMT symbol count M equal to 8 has a phase shift added to the phase characteristic of that carrier signal equal to $(50+8) \times \frac{\pi}{4} (\mathrm{mod}\, 2\pi) = \frac{\pi}{2}$. The carrier signal with the same carrier number N equal to 50 on the next DMT symbol count M equal to 9 has a phase shift added to the phase characteristic of that carrier signal equal to $(50+9) \times \frac{\pi}{4} (\mathrm{mod}\, 2\pi) = \frac{3\pi}{4}$.

DISH
Exhibit 1003 Page 110

Phase Shifting Example #3

Phase shifting example #3 (PS #3) corresponds to adjusting the phase characteristic of the QAM-modulated carrier signal associated with a carrier number N by $(X_N)\times\frac{\pi}{6}$, mod 2π, where X_N is an array of N pseudo-random numbers. In this example, a carrier signal having a carrier number N equal to 5 and X_N equal to [3, 8, 1, 4, 9, 5, ...] has a phase shift added to the phase characteristic of the carrier signal that is equal to $(9)\times\frac{\pi}{6}(\text{mod}\,2\pi)=\frac{\pi}{3}$. (Note that 9 is the 5th value in X_N.) The carrier signal with a carrier number N equal to 6 has a phase shift added to the phase characteristic of the carrier signal equal to $(5)\times\frac{\pi}{6}(\text{mod}\,2\pi)=\frac{5\pi}{3}$.

It is to be understood that additional and/or different phase shifting techniques can be used by the phase scrambler 66, and that PS #1, #2, and #3 are merely illustrative examples of the principles of the invention. The DMT transmitter 22 then combines (step 130) the carrier signals to form the transmission signal 38. If the transmission signal is not clipped, as described below, the DMT transmitter 22 consequently transmits (step 160) the transmission signal 38 to the remote receiver 34.

Clipping of Transmission Signals

A transmission signal 38 that has high peak values of voltage (i.e., a high PAR) can induce non-linear distortion in the DMT transmitter 22 and the communication channel 18. One form of this non-linear distortion of the transmission signal 38 that may occur is the limitation of the amplitude of the transmission signal 38 (i.e., clipping). For example, a particular DMT symbol 70 clips in the time domain when one or more time domain samples in that DMT symbol 70 are larger than the maximum allowed digital value for the DMT symbols 70. In multicarrier communication

DISH
Exhibit 1003 Page 111

systems when clipping occurs, the transmission signal 38 does not accurately represent the input serial data bit signal 54.

In one embodiment, the DSL communication system 2 avoids the clipping of the transmission signal 38 on a DMT symbol 70 by DMT symbol 70 basis. The DMT transmitter 22 detects (step 140) the clipping of the transmission signal 38. If a particular DMT symbol 70 clips in the time domain to produce a clipped transmission signal 38, the DMT transmitter 22 substitutes (step 150) a predefined transmission signal 78 for the clipped transmission signal 38.

The predefined transmission signal 78 has the same duration as a DMT symbol 70 (e.g., 250 ms) in order to maintain symbol timing between the DMT transmitter 22 and the remote receiver 34. The predefined transmission signal 78 is not based on (i.e., independent of) the modulated input data bit stream 54; it is a bit value pattern that is recognized by the remote receiver 34 as a substituted signal. In one embodiment, the predefined transmission signal 78 is a known pseudo-random sequence pattern that is easily detected by the remote receiver 34. In another embodiment, the predefined transmission signal 78 is an "all zeros" signal, which is a zero voltage signal produced at the DMT transmitter 22 output (i.e., zero volts modulated on all the carrier signals). In addition to easy detection by the remote receiver 34, the zero voltage signal reduces the power consumption of the DMT transmitter 22 when delivered by the DMT transmitter 22. Further, a pilot tone is included in the predefined transmission signal 78 to provide a reference signal for coherent demodulation of the carrier signals in the remote receiver 34 during reception of the predefined transmission signal 78.

After the remote receiver 34 receives the transmission signal 38, the remote receiver 34 determines if the transmission signal 38 is equivalent to the predefined transmission signal 78. In

DISH
Exhibit 1003 Page 112

one embodiment, when the remote receiver 34 identifies the predefined transmission signal 78, the remote receiver 34 ignores (i.e., discards) the predefined transmission signal 78.

Following the transmission of the predefined transmission signal 78, the phase scrambler 66 shifts (step 120) the phase characteristic of the QAM-modulated carrier signals (based on one of the predefined parameters that varies over time). For example, consider that a set of QAM symbols 58 produces a DMT symbol 70 comprising a plurality of time domain samples, and that one of the time domain samples is larger than the maximum allowed digital value for the DMT symbol 70. Therefore, because the transmission signal 38 would be clipped when sent to the remote receiver 34, the DMT transmitter 22 sends the predefined transmission signal 78 instead.

After transmission of the predefined transmission signal 78, the DMT transmitter 22 again attempts to send the same bit values that produced the clipped transmission signal 38 in a subsequent DMT symbol 70'. Because the generation of phase shifts in this embodiment is based on values that vary over time, the phase shifts computed for the subsequent DMT symbol 70' are different than those that were previously computed for the DMT symbol 70 with the clipped time domain sample. These different phase shifts are combined to the phase characteristics of the modulated carrier signals to produce carrier signals of the subsequent DMT symbol 70' with different phase characteristics than the carrier signals of the DMT symbol 70 with the clipped time domain sample.

DMT communication systems 2 infrequently produce transmission signals 38 that clip (e.g., approximately one clip every 10^7 time domain samples 70). However, if the subsequent DMT symbol 70' includes a time domain sample that clips, then the predefined transmission signal 78 is again transmitted (step 150) to the remote receiver 34 instead of the clipped transmission signal 38. The clipping time domain sample may be on the same or on a different carrier signal than the

previously clipped DMT symbol 70. The DMT transmitter 22 repeats the transmission of the predefined transmission signal 78 until the DMT transmitter 22 produces a subsequent DMT symbol 70' that is not clipped. When the DMT transmitter 22 produces a DMT symbol 70' that is not clipped, the DTM transmitter 22 transmits (step 160) the transmission signal 38 to the remote receiver 34. The probability of a DMT symbol 70 producing a transmission signal 38 that clips in the time domain depends on the PAR of the transmission signal 38.

For example, the following phase shifting example, PST #4, illustrates the method used by the phase scrambler 66 to combine a different phase shift to the phase characteristic of each carrier signal to avoid the clipping of the transmission signal 38.

Phase Shifting Example #4

Phase shifting example #4 (PS #4) corresponds to adjusting the phase characteristic of the carrier signal associated with a carrier number N by $\frac{\pi}{3} \times (M + N)$, mod 2π, where M is the DMT symbol count. In this example, if the DMT symbol 70 clips when the DMT symbol count M equals 5, the predefined transmission signal 78 is transmitted instead of the current clipped transmission signal 38. On the following DMT symbol period, the DMT count M equals 6, thereby causing a different set of time domain samples to be generated for the subsequent DMT symbol 70', although the QAM symbols 58 used to produce both DMT symbols 70, 70' are the same.

If this different set of time domain samples (and consequently the transmission signal 38) is not clipped, the DMT transmitter 22 sends the transmission signal 38. If one of the time domain samples in the different set of time domain samples 70 (and consequently the transmission signal 38) is clipped, then the DMT transmitter 22 sends the predefined transmission signal 78 again. The process continues until a DMT symbol 70 is produced without a time domain sample 70 that is

DISH
Exhibit 1003 Page 114

clipped. In one embodiment, the transmitter 22 stops attempting to produce a non-clipped DMT symbol 70' for the particular set of QAM symbols 58 after generating a predetermined number of clipped DMT symbols 70'. At that moment, the transmitter 22 can transmit the most recently produced clipped DMT symbol 70' or the predetermined transmission signal 78.

The PAR of the DSL communication system 2 is reduced because the predefined transmission signal 78 is sent instead of the transmission signal 38 when the DMT symbol 70 clips. For example, a DMT communication system 2 that normally has a clipping probability of 10^{-7} for the time domain transmission signal 38 can therefore operate with a 10^{-5} probability of clipping and a lower PAR equal to 12.8 dB (as compared to 14.5 dB). When operating at a 10^{-5} probability of clipping, assuming a DMT symbol 70 has 512 time-domain samples 70, the DMT transmitter 22 experiences one clipped DMT symbol 70 out of every $\frac{10^5}{512}$, or 195 DMT symbols 70. This results in the predefined (non-data carrying) transmission signal 78 being transmitted, on average, once every 195 DMT symbols. Although increasing the probability of clipping to 10^{-5} results in approximately a 0.5% (1/195) decrease in throughput, the PAR of the transmission signal 38 is reduced by 1.7 dB, which reduces transmitter complexity in the form of power consumption and component linearity.

While the invention has been shown and described with reference to specific preferred embodiments, it should be understood by those skilled in the art that various changes in form and detail may be made therein without departing from the spirit and scope of the invention as defined by the following claims. For example, although the specification uses DSL to describe the invention, it is to be understood that various form of DSL can be used, e.g., ADSL, VDSL, SDSL, HDSL, HDSL2, or SHDSL. It is also to be understood that the principles of the invention apply to

DISH
Exhibit 1003 Page 115

various types of applications transported over DSL systems (e.g., telecommuting, video conferencing, high speed Internet access, video-on demand).

DISH
Exhibit 1003 Page 116

What is Claimed:

1. In a multicarrier modulation system including a first transceiver in communication with a second transceiver using a transmission signal having a plurality of carrier signals for modulating an input bit stream, each carrier signal having a phase characteristic associated with the input bit stream, a method for scrambling the phase characteristics of the carrier signals comprising:

associating each carrier signal with a value determined independently of any input bit value carried by that carrier signal;

computing a phase shift for each carrier signal based on the value associated with that carrier signal; and

combining the phase shift computed for each carrier signal with the phase characteristic of that carrier signal so as to substantially scramble the phase characteristics of the plurality of carrier signals.

2. The method of claim 1 further comprising modulating bits of the input bit stream onto the carrier signals having the substantially scrambled phase characteristics to produce a transmission signal with a reduced peak-to-average power ratio (PAR).

3. The method of claim 1 further comprising independently deriving the value associated with each carrier signal at each transceiver.

4. The method of claim 1 further comprising transmitting the value associated with each carrier signal from one transceiver to the other transceiver.

DISH
Exhibit 1003 Page 117

5. The method of claim 1 further comprising maintaining synchronization between the transceivers using the value associated with each carrier signal.

6. The method of claim 1 wherein the value varies with each carrier signal.

7. The method of claim 1 wherein the value varies with each DMT symbol.

8. The method of claim 1 wherein the valuc is dcrived from a predetermined parameter.

9. The method of claim 8 wherein the predefined parameter is a carrier number.

10. Thc method of claim 8 wherein the predefined parameter is a symbol count.

11. The method of claim 8 wherein the predefined parameter is a hyperframe count.

12. The method of claim 8 wherein the predefined parameter is a superframe count.

13. The method of claim 1 further comprising scrambling the bits of the input bit stream.

14. The method of claim 1 further comprising transmitting a predetermined transmission signal when the amplitude of the transmission signal exceeds a certain level.

15. The method of claim 14 wherein the predetermined transmission signal comprises a predetermined pattern of bits.

DISH
Exhibit 1003 Page 118

16. The method of claim 14 wherein the predetermined transmission signal comprises a pilot tone.

17. The method of claim 16 wherein the pilot tone is used to maintain timing synchronization between the first transceiver and the second transceiver.

18. The method of claim 15 wherein each bit value in the predetermined pattern of bits is a zero valuc.

19. The method of claim 15 wherein the predetermined pattern of bits is a pseudo-random sequence pattern.

20. In a multicarrier modulation system including a first transceiver in communication with a second transceiver using a transmission signal having a plurality of carrier signals for modulating an input bit stream, each carrier signal having a phase characteristic with the input bit stream, a method for scrambling the phase characteristics of the carrier signals comprising:

associating each carrier signal with a value determined independently of any input bit value carricd by that carrier signal;

computing a phase shift for each carrier signal based on the value associated with that carrier signal; and

demodulating the transmission signal using the phase shift computed for each carrier signal.

DISH
Exhibit 1003 Page 119

Abstract

A system and method that scrambles the phase characteristic of a carrier signal are described. The scrambling of the phase characteristic of each carrier signal includes associating a value with each carrier signal and computing a phase shift for each carrier signal based on the value associated with that carrier signal. The value is determined independently of any input bit value carried by that carrier signal. The phase shift computed for each carrier signal is combined with the phase characteristic of that carrier signal so as to substantially scramble the phase characteristic of the carrier signals. Bits of an input signal are modulated onto the carrier signals having the substantially scrambled phase characteristic to produce a transmission signal with a reduced PAR.

DISH
Exhibit 1003 Page 120

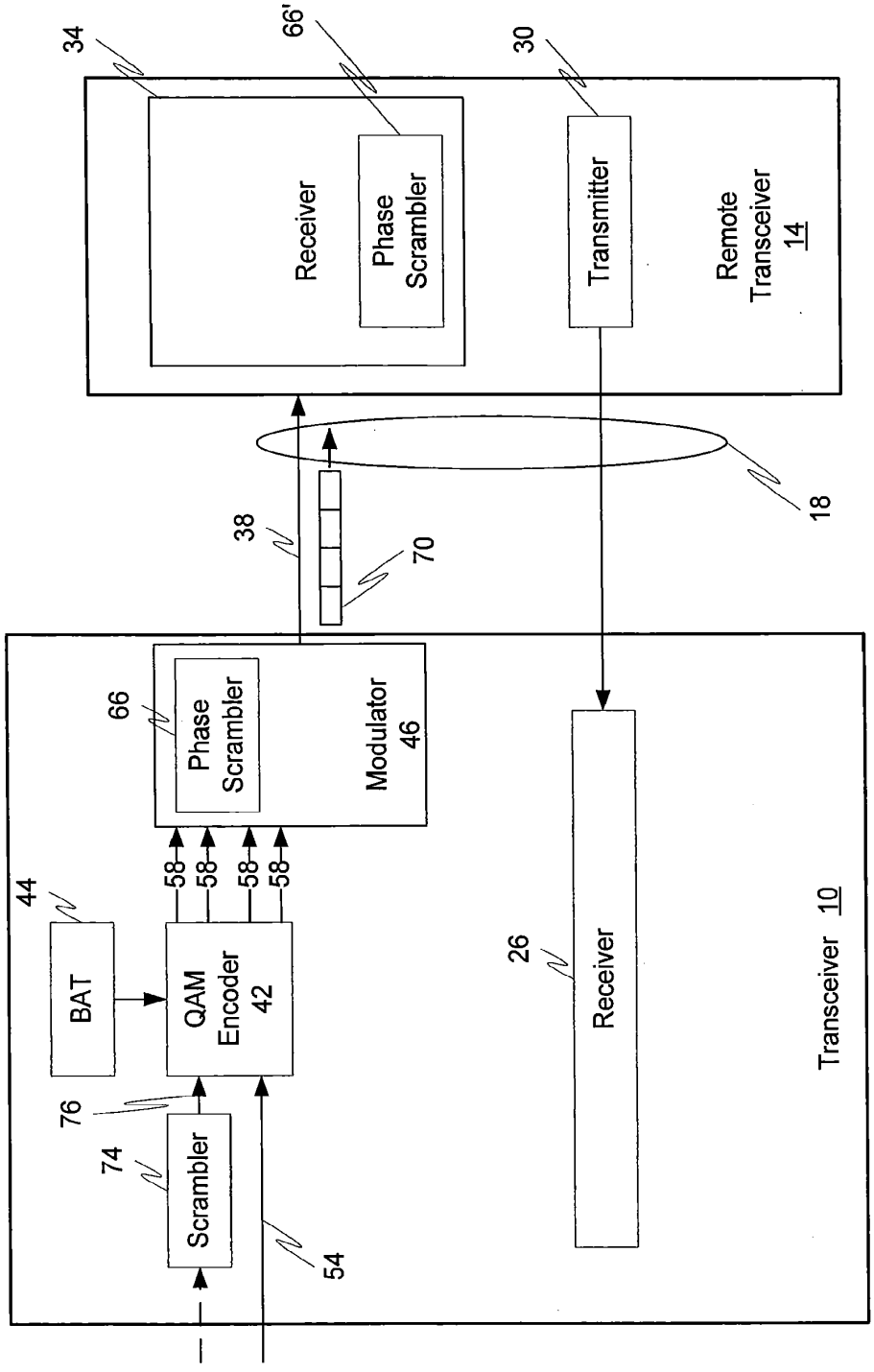
34
66'
30
Receiver
Phase Scrambler
Transmitter
Remote Transceiver 14
18
38
70
66
Phase Scrambler
Modulator 46
58
58
58
58
44
BAT
QAM Encoder 42
76
74
Scrambler
54
26
Receiver
Transceiver 10

Fig. 1

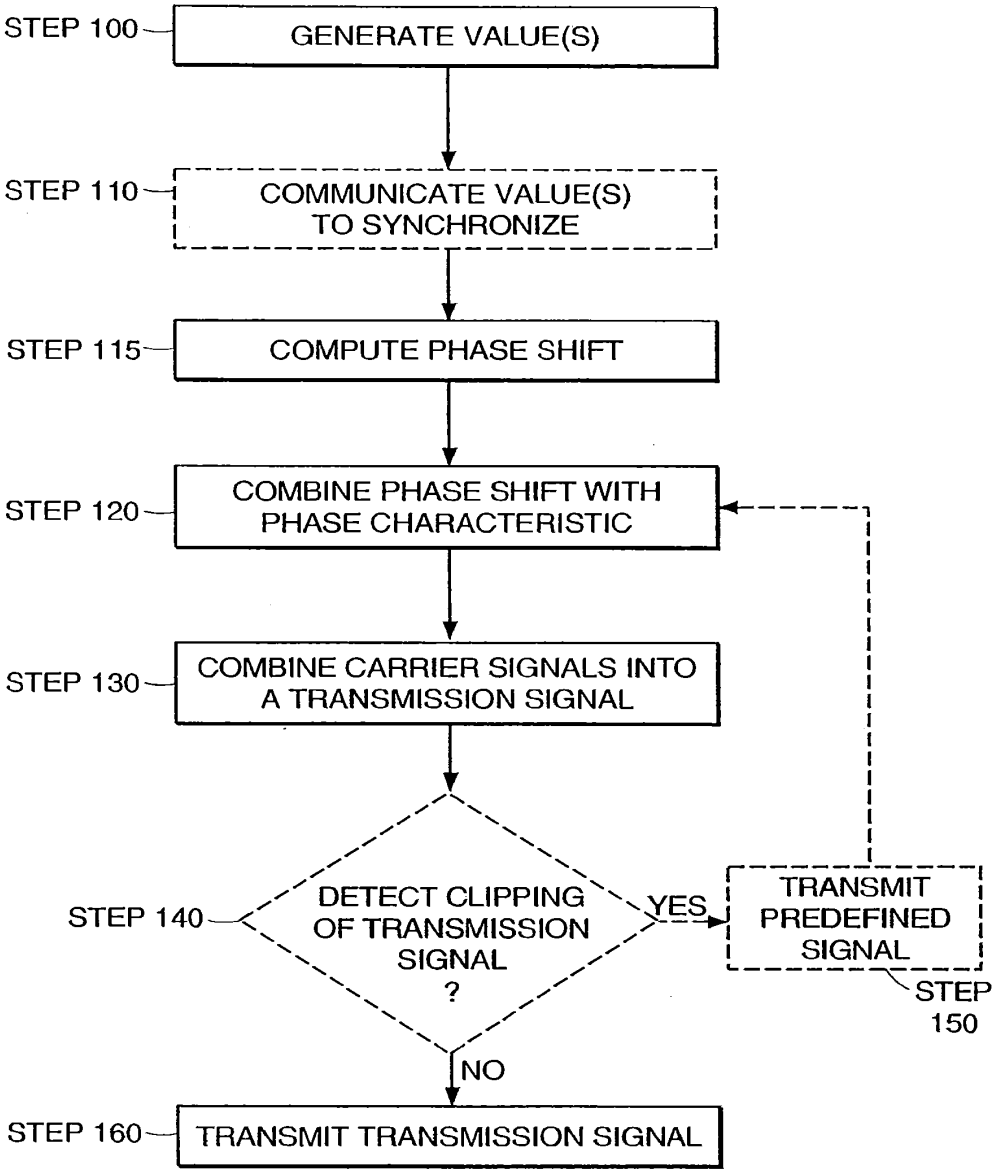
STEP 100
GENERATE VALUE(S)
STEP 110
COMMUNICATE VALUE(S) TO SYNCHRONIZE
STEP 115
COMPUTE PHASE SHIFT
STEP 120
COMBINE PHASE SHIFT WITH PHASE CHARACTERISTIC
STEP 130
COMBINE CARRIER SIGNALS INTO A TRANSMISSION SIGNAL
STEP 140
DETECT CLIPPING OF TRANSMISSION SIGNAL ?
YES
TRANSMIT PREDEFINED SIGNAL
STEP 150
NO
STEP 160
TRANSMIT TRANSMISSION SIGNAL

FIG. 2

A System and Method for Descrambling~~Scrambling~~ the Phase of ~~the~~ Carriers in a Multicarrier Communications System

Related Application

This application is a continuation of U.S. Application No. 13/284,549, filed October 28, 2011, which is a continuation of 11/860,080, filed September 24, 2007, now U.S. Patent No. 8,073,041, which is a divisional of U.S. Application No. 11/211,535, filed August 26, 2005, now U.S. Patent No. 7,292,627, which is a continuation of U.S. Application No. 09/710,310, filed on November 9, 2000, now U.S. Patent No. 6,961,369, which~~This application~~ claims the benefit of the filing date of copending U.S. Provisional Application, Serial No. 60/164,134, filed November 9, 1999, entitled "A Method For Randomizing The Phase Of The Carriers In A Multicarrier Communications System To Reduce The Peak To Average Power Ratio Of The Transmitted Signal," each which are~~the entirety of each which provisional application is~~ incorporated by reference herein in their entirety.

Field of the Invention

This invention relates to communications systems using multicarrier modulation. More particularly, the invention relates to multicarrier communications systems that lower the peak-to-average power ratio (PAR) of transmitted signals.

Background of the Invention

In a conventional multicarrier communications system, transmitters communicate over a communication channel using multicarrier modulation or Discrete Multitone Modulation (DMT). Carrier signals (carriers) or sub-channels spaced within a usable frequency band of the communication channel are modulated at a symbol (i.e., block) transmission rate of the system. An input signal, which includes input data bits, is sent to a DMT transmitter, such as a DMT modem. The DMT transmitter typically modulates the phase characteristic, or phase, and amplitude of the carrier signals using an Inverse Fast Fourier Transform (IFFT) to generate a time domain signal, or transmission signal, that represents the input signal. The DMT transmitter transmits the transmission signal, which is a

linear combination of the multiple carriers, to a DMT receiver over the communication channel.

The phase and amplitude of the carrier signals of DMT transmission signal can be considered random because the phase and amplitude result from the modulation of an arbitrary sequence of input data bits comprising the transmitted information. Therefore, under the condition that the modulated data bit stream is random, the DMT transmission signal can be approximated as having a Gaussian probability distribution. A bit scrambler is often used in the DMT transmitter to scramble the input data bits before the bits are modulated to assure that the transmitted data bits are random and, consequently, that the modulation of those bits produces a DMT transmission signal with a Gaussian probability distribution.

With an appropriate allocation of transmit power levels to the carriers or sub-channels, such a system provides a desirable performance. Further, generating a transmission signal with a Gaussian probability distribution is important in order to transmit a transmission signal with a low peak-to-average ratio (PAR), or peak-to-average power ratio. The PAR of a transmission signal is the ratio of the instantaneous peak value (i.e., maximum magnitude) of a signal parameter (e.g., voltage, current, phase, frequency, power) to the time-averaged value of the signal parameter. In DMT systems, the PAR of the transmitted signal is determined by the probability of the random transmission signal reaching a certain peak voltage during the time interval required for a certain number of symbols. An example of the PAR of a transmission signal transmitted from a DMT transmitter is 14.5 dB, which is equivalent to having a 1E-7 probability of clipping. The PAR of a transmission signal transmitted and received in a DMT communication system is an important consideration in the design of the DMT communication system because the PAR of a signal affects the communication system's total power consumption and component linearity requirements of the system.

If the phase of the modulated carriers is not random, then the PAR can increase greatly. Examples of cases where the phases of the modulated carrier signals are not random are when bit scramblers are not used, multiple carrier signals are used to modulate the same input data bits, and the constellation maps, which are mappings of input data bits to the phase

of a carrier signal, used for modulation are not random enough (i.e., a zero value for a data bit corresponds to a 90 degree phase characteristic of the DMT carrier signal and a one value for a data bit corresponds to a -90 degree phase characteristic of the DMT carrier signal). An increased PAR can result in a system with high power consumption and/or with high probability of clipping the transmission signal. Thus, there remains a need for a system and method that can effectively scramble the phase of the modulated carrier signals in order to provide a low PAR for the transmission signal.

Summary of the Invention

The present invention features a system and method that scrambles the phase characteristics of the modulated carrier signals in a transmission signal. In one aspect, a value is associated with each carrier signal. A phase shift is computed for each carrier signal based on the value associated with that carrier signal. The value is determined independently of any input bit value carried by that carrier signal. The phase shift computed for each carrier signal is combined with the phase characteristic of that carrier signal to substantially scramble the phase characteristics of the carrier signals.

In one embodiment, the input bit stream is modulated onto the carrier signals having the substantially scrambled phase characteristic to produce a transmission signal with a reduced peak-to-average power ratio (PAR). The value is derived from a predetermined parameter, such as a random number generator, a carrier number, a DMT symbol count, a superframe count, and a hyperframe count. In another embodiment, a predetermined transmission signal is transmitted when the amplitude of the transmission signal exceeds a certain level.

In another aspect, the invention features a method wherein a value is associated with each carrier signal. The value is determined independently of any input bit value carried by that carrier signal. A phase shift for each carrier signal is computed based on the value associated with that carrier signal. The transmission signal is demodulated using the phase shift computed for each carrier signal.

In another aspect, the invention features a system comprising a phase scrambler that computes a phase shift for each carrier signal based on a value associated with that carrier signal. The phase scrambler also combines the phase shift computed for each carrier signal with the phase characteristic of that carrier signal to substantially scramble the phase characteristic of the carrier signals. In one embodiment, a modulator, in communication with the phase scrambler, modulates bits of an input signal onto the carrier signals having the substantially scrambled phase characteristics to produce a transmission signal with a reduced PAR.

Description of the Drawings

The invention is pointed out with particularity in the appended claims. The advantages of the invention described above, as well as further advantages of the invention, may be better understood by reference to the following description taken in conjunction with the accompanying drawings, in which:

FIG. 1 is a block diagram of an embodiment of a digital subscriber line communications system including a DMT (discrete multitone modulation) transceiver, in communication with a remote transceiver, having a phase scrambler for substantially scrambling the phase characteristics of carrier signals; and

FIG. 2 is a flow diagram of an embodiment of a process for scrambling the phase characteristics of the carrier signals in a transmission signal.

Detailed Description

FIG. 1 shows a digital subscriber line (DSL) communication system 2 including a discrete multitone (DMT) transceiver 10 in communication with a remote transceiver 14 over a communication channel 18 using a transmission signal 38 having a plurality of carrier signals. The DMT transceiver 10 includes a DMT transmitter 22 and a DMT receiver 26. The remote transceiver 14 includes a transmitter 30 and a receiver 34. Although described with respect to discrete multitone modulation, the principles of the invention apply also to other types of multicarrier modulation, such as, but not limited to, orthogonally multiplexed quadrature amplitude modulation (OQAM), discrete wavelet multitone (DWMT) modulation, and orthogonal frequency division multiplexing (OFDM).

The communication channel 18 provides a downstream transmission path from the DMT transmitter 22 to the remote receiver 34, and an upstream transmission path from the remote transmitter 30 to the DMT receiver 26. In one embodiment, the communication channel 18 is a pair of twisted wires of a telephone subscriber line. In other embodiments, the communication channel 18 can be a fiber optic wire, a quad cable, consisting of two pairs of twisted wires, or a quad cable that is one of a star quad cable, a Dieselhorst-Martin quad cable, and the like. In a wireless communication system wherein the transceivers 10, 14 are

wireless modems, the communication channel 18 is the air through which the transmission signal 38 travels between the transceivers 10, 14.

By way of example, the DMT transmitter 22 shown in FIG. 1 includes a quadrature amplitude modulation (QAM) encoder 42, a modulator 46, a bit allocation table (BAT) 44, and a phase scrambler 66. The DMT transmitter 22 can also include a bit scrambler 74, as described further below. The remote transmitter 30 of the remote transceiver 14 comprises equivalent components as the DMT transmitter 22. Although this embodiment specifies a detailed description of the DMT transmitter 22, the inventive concepts apply also to the receivers 34, 2636 which have similar components to that of the DMT transmitter 22, but perform inverse functions in a reverse order.

The QAM encoder 42 has a single input for receiving an input serial data bit stream 54 and multiple parallel outputs to transmit QAM symbols 58 generated by the QAM encoder 42 from the bit stream 54. In general, the QAM encoder 42 maps the input serial bit-stream 54 in the time domain into parallel QAM symbols 58 in the frequency domain. In particular, the QAM encoder 42 maps the input serial data bit stream 54 into N parallel quadrature amplitude modulation (QAM) constellation points 58, or QAM symbols 58, where N represents the number of carrier signals generated by the modulator 46. The BAT 44 is in communication with the QAM encoder 42 to specify the number of bits carried by each carrier signal. The QAM symbols 58 represent the amplitude and the phase characteristic of each carrier signal.

The modulator 46 provides functionality associated with the DMT modulation and transforms the QAM symbols 58 into DMT symbols 70 each comprised of a plurality of time-domain samples. The modulator 46 modulates each carrier signal with a different QAM symbol 58. As a result of this modulation, carrier signals have phase and amplitude characteristics based on the QAM symbol 58 and therefore based on the input-bit stream 54. In particular, the modulator 46 uses an inverse fast Fourier transform (IFFT) to change the QAM symbols 58 into a transmission signal 38 comprised of a sequence of DMT symbols 70. The modulator 46 changes the QAM symbols 58 into DMT symbols 70 through modulation of the carrier signals. In another embodiment, the modulator 46 uses the inverse discrete Fourier transform (IDFT) to change the QAM symbols 58 into DMT symbols 70. In

one embodiment, a pilot tone is included in the transmission signal 38 to provide a reference signal for coherent demodulation of the carrier signals in the remote receiver 34 during reception of the transmission signal 38.

The modulator 46 also includes a phase scrambler 66 that combines a phase shift computed for each QAM-modulated carrier signal with the phase characteristic of that carrier signal. Combining phase shifts with phase characteristics, in accordance with the principles of the invention, substantially scrambles the phase characteristics of the carrier signals in the transmission signal 38. By scrambling the phase characteristics of the carrier signals, the resulting transmission signal 38 has a substantially minimized peak-to-average (PAR) power ratio. The phase scrambler 66 can be part of or external to the modulator 46. Other embodiments of the phase scrambler 66 include, but are not limited to, a software program that is stored in local memory and is executed on the modulator 46, a digital signal processor (DSP) capable of performing mathematical functions and algorithms, and the like. The remote receiver 34 similarly includes a phase ~~scrambler~~descrambler 66' for use when demodulating carrier signals that have had their phase characteristics adjusted by the phase scrambler 66 of the DMT transceiver 10.

To compute a phase shift for each carrier signal, the phase scrambler 66 associates one or more values with that carrier signal. The phase scrambler 66 determines each value for a carrier signal independently of the QAM symbols 58, and, therefore, independently of the bit value(s) modulated onto the carrier signal. The actual value(s) that the phase scrambler 66 associates with each carrier signal can be derived from one or more predefined parameters, such as a pseudo-random number generator (pseudo-RNG), a DMT carrier number, a DMT symbol count, a DMT superframe count, a DMT hyperframe count, and the like, as described in more detail below. Irrespective of the technique used to produce each value, the same technique is used by the DMT transmitter 22 and the remote receiver 34 so that the value associated with a given carrier signal is known at both ends of the communication channel 18.

The phase scrambler 66 then solves a predetermined equation to compute a phase shift for the carrier signal, using the value(s) associated with that carrier signal as input that effects the output of the equation. Any equation suitable for computing phase shifts can be

used to compute the phase shifts. When the equation is independent of the bit values of the input serial bit stream 54, the computed phase shifts are also independent of such bit values.

In one embodiment (shown in phantom), the DMT transmitter 22 includes a bit scrambler 74, which receives the input serial bit stream 54 and outputs data bits 76 that are substantially scrambled. The substantially scrambled bits 76 are then passed to the QAM encoder 42. When the bit scrambler 74 is included in the DMT transmitter 22, the operation of the phase scrambler 66 further assures that the transmission signal 38 has a Gaussian probability distribution and, therefore, a substantially minimized PAR.

FIG. 2 shows embodiments of a process used by the DMT transmitter 22 for adjusting the phase characteristic of each carrier signal and combining these carrier signals to produce the transmission signal 38. The DMT transmitter 22 generates (step 100) a value that is associated with a carrier signal. Because the value is being used to alter the phase characteristics of the carrier signal, both the DMT transmitter 22 and the remote receiver 34 must recognize the value as being associated with the carrier signal. Either the DMT transmitter 22 and the remote receiver 34 independently derive the associated value, or one informs the other of the associated value. For example, in one embodiment the DMT transmitter 22 can derive the value from a pseudo-RNG and then transmit the generated value to the remote receiver 34. In another embodiment, the remote receiver 34 similarly derives the value from the same pseudo-RNG and the same seed as used by the transmitter (i.e., the transmitter pseudo-RNG produces the same series of random numbers as the receiver pseudo-RNG).

As another example, the DMT transmitter 22 and the remote receiver 34 can each maintain a symbol counter for counting DMT symbols. The DMT transmitter 22 increments its symbol counter upon transmitting a DMT symbol; the remote receiver 34 upon receipt. Thus, when the DMT transmitter 22 and the remote receiver 34 both use the symbol count as a value for computing phase shifts, both the DMT transmitter 22 and remote receiver 34 "know" that the value is associated with a particular DMT symbol and with each carrier signal of that DMT symbol.

Values can also be derived from other types of predefined parameters. For example, if the predefined parameter is the DMT carrier number, then the value associated with a particular carrier signal is the carrier number of that signal within the DMT symbol. The number of a carrier signal represents the location of the frequency of the carrier signal relative to the frequency of other carrier signals within a DMT symbol. For example, in one embodiment the DSL communication system 2 provides 256 carrier signals, each separated by a frequency of 4.3125 kHz and spanning the frequency bandwidth from 0 kHz to 1104 kHz. The DMT transmitter 22 numbers the carrier signals from 0 to 255. Therefore, "DMT carrier number 50" represents the 51st DMT carrier signal which is located at the frequency of 215.625 kHz (i.e., 51 x 4.3125 kHz).

Again, the DMT transmitter 22 and the remote receiver 34 can know the value that is associated with the carrier signal because both the DMT transmitter 22 and the remote receiver 34 use the same predefined parameter (here, the DMT carrier number) to make the value-carrier signal association. In other embodiments (as exemplified above with the transmitter pseudo-RNG), the DMT transmitter 22 can transmit the value to the remote receiver 34 (or vice versa) over the communication channel 18.

In other embodiments, other predefined parameters can be used in conjunction with the symbol count. One example of such a predefined parameter is the superframe count that increments by one every 69 DMT symbols. One exemplary implementation that achieves the superframe counter is to perform a modulo 68 operation on the symbol count. As another example, the DMT transmitter 22 can maintain a hyperframe counter for counting hyperframes. An exemplary implementation of the hyperframe count is to perform a modulo 255 operation on the superframe count. Thus, the hyperframe count increments by one each time the superframe count reaches 255.

Accordingly, it is seen that some predefined parameters produce values that vary from carrier signal to carrier signal. For example, when the predefined parameter is the DMT carrier number, values vary based on the frequency of the carrier signal. As another example, the pseudo-RNG generates a new random value for each carrier signal.

Other predefined parameters produce values that vary from DMT symbol 70 to DMT symbol 70. For example, when the predefined parameter is the symbol count, the superframe

count, or hyperframe count, values vary based on the numerical position of the DMT symbol 70 within a sequence of symbols, superframes, or hyperframes. Predefined parameters such as the pseudo-RNG, symbol count, superframe count, and superframe can also be understood to be parameters that vary values over time. Any one or combination of the predefined parameters can provide values for input to the equation that computes a phase shift for a given carrier signal.

In one embodiment, the phase scrambling is used to avoid clipping of the transmission signal 38 on a DMT symbol 70 by DMT symbol 70 basis. In this embodiment, the DMT transmitter 22 uses a value based on a predefined parameter that varies over time, such as the symbol count, to compute the phase shift. It is to be understood that other types of predefined parameters that vary the values associated with carrier signals can be used to practice the principles of the invention. As described above, the transceivers 10, 14 may communicate (step 110) the values to synchronize their use in modulating and demodulating the carrier signals.

The DMT transmitter 22 then computes (step 115) the phase shift that is used to adjust the phase characteristic of each carrier signal. The amount of the phase shift combined with the phase characteristic of each QAM-modulated carrier signal depends upon the equation used and the one or more values associated with that carrier signal.

The DMT transmitter 22 then combines (step 120) the phase shift computed for each carrier signal with the phase characteristic of that carrier signal. By scrambling the phase characteristics of the carrier signals, the phase scrambler 66 reduces (with respect to unscrambled phase characteristics) the combined PAR of the plurality of carrier signals and, consequently, the transmission signal 38. The following three phase shifting examples, PS #1-PS #3, illustrate methods used by the phase scrambler 66 to combine a computed phase shift to the phase characteristic of each carrier signal.

Phase Shifting Example #1

Phase shifting example #1 (PS #1) corresponds to adjusting the phase characteristic of the QAM-modulated carrier signal associated with a carrier number N by $N \times \frac{\pi}{3,}$ modulo (mod) 2π. In this example, a carrier signal having a carrier number N equal to 50 has a phase shift added to the phase characteristic of that carrier signal equal to $50 \times \frac{\pi}{3}$ (mod 2π) = $\frac{2}{3}$ π. The carrier signal with a carrier number N equal to 51 has a phase shift added to the phase characteristic of that carrier signal equal to $51 \times \frac{\pi}{3}$ (mod2π)=π. The carrier signal with the carrier number N equal to 0 has no phase shift added to the phase characteristic of that carrier signal.

Phase Shifting Example #2

Phase shifting example #2 (PS #2) corresponds to adjusting the phase characteristic of the QAM-modulated carrier signal associated with a carrier number N by $(N + M) \times \frac{\pi}{4}$, mod 2π, where M is the symbol count. In this example, a carrier signal having a carrier number N equal to 50 on DMT symbol count M equal to 8 has a phase shift added to the phase characteristic of that carrier signal equal to $(50 + 8) \times \frac{\pi}{4}$ (mod 2π)= $\frac{\pi}{2}$. The carrier signal with the same carrier number N equal to 50 on the next DMT symbol count M equal to 9 has a phase shift added to the phase characteristic of that carrier signal equal to $(50 + 9) \times \frac{\pi}{4}$ (mod 2π) = $\frac{3\pi}{4}$.

Phase Shifting Example #3

Phase shifting example #3 (PS #3) corresponds to adjusting the phase characteristic of the QAM-modulated carrier signal associated with a carrier number N by $(X_N) \times \frac{\pi}{6}, \mathrm{mod}\, 2\pi,$

DISH
Exhibit 1003 Page 133

where XN is an array of N pseudo-random numbers. In this example, a carrier signal having a carrier number N equal to 5 and XN equal to [3, 8, 1, 4, 9, 5, . . .] has a phase shift added to the phase characteristic of the carrier signal that is equal to $(9)\times\frac{\pi}{6}(\mathrm{mod}\,2\pi)=\frac{3\pi}{2}$ (Note that 9 is the 5th value in XN.) The carrier signal with a carrier number N equal to 6 has a phase shift added to the phase characteristic of the carrier signal equal to $(5)\times\frac{\pi}{6}(\mathrm{mod}\,2\pi)=\frac{5\pi}{6}$.

It is to be understood that additional and/or different phase shifting techniques can be used by the phase scrambler 66, and that PS #1, #2, and #3 are merely illustrative examples of the principles of the invention. The DMT transmitter 22 then combines (step 130) the carrier signals to form the transmission signal 38. If the transmission signal is not clipped, as described below, the DMT transmitter 22 consequently transmits (step 160) the transmission signal 38 to the remote receiver 34.

Clipping of Transmission Signals

A transmission signal 38 that has high peak values of voltage (i.e., a high PAR) can induce non-linear distortion in the DMT transmitter 22 and the communication channel 18. One form of this non-linear distortion of the transmission signal 38 that may occur is the limitation of the amplitude of the transmission signal 38 (i.e., clipping). For example, a particular DMT symbol 70 clips in the time domain when one or more time domain samples in that DMT symbol 70 are larger than the maximum allowed digital value for the DMT symbols 70. In multicarrier communication systems when clipping occurs, the transmission signal 38 does not accurately represent the input serial data bit signal 54.

In one embodiment, the DSL communication system 2 avoids the clipping of the transmission signal 38 on a DMT symbol 70 by DMT symbol 70 basis. The DMT transmitter 22 detects (step 140) the clipping of the transmission signal 38. If a particular DMT symbol 70 clips in the time domain to produce a clipped transmission signal 38, the DMT transmitter

22 substitutes (step 150) a predefined transmission signal 78 for the clipped transmission signal 38.

The predefined transmission signal 78 has the same duration as a DMT symbol 70 (e.g., 250 ms) in order to maintain symbol timing between the DMT transmitter 22 and the remote receiver 34. The predefined transmission signal 78 is not based on (i.e., independent of) the modulated input data bit stream 54; it is a bit value pattern that is recognized by the remote receiver 34 as a substituted signal. In one embodiment, the predefined transmission signal 78 is a known pseudo-random sequence pattern that is easily detected by the remote receiver 34. In another embodiment, the predefined transmission signal 78 is an "all zeros" signal, which is a zero voltage signal produced at the DMT transmitter 22 output (i.e., zero volts modulated on all the carrier signals). In addition to easy detection by the remote receiver 34, the zero voltage signal reduces the power consumption of the DMT transmitter 22 when delivered by the DMT transmitter 22. Further, a pilot tone is included in the predefined transmission signal 78 to provide a reference signal for coherent demodulation of the carrier signals in the remote receiver 34 during reception of the predefined transmission signal 78.

After the remote receiver 34 receives the transmission signal 38, the remote receiver 34 determines if the transmission signal 38 is equivalent to the predefined transmission signal 78. In one embodiment, when the remote receiver 34 identifies the predefined transmission signal 78, the remote receiver 34 ignores (i.e., discards) the predefined transmission signal 78.

Following the transmission of the predefined transmission signal 78, the phase scrambler 66 shifts (step 120) the phase characteristic of the QAM-modulated carrier signals (based on one of the predefined parameters that varies over time). For example, consider that a set of QAM symbols 58 produces a DMT symbol 70 comprising a plurality of time domain samples, and that one of the time domain samples is larger than the maximum allowed digital value for the DMT symbol 70. Therefore, because the transmission signal 38 would be clipped when sent to the remote receiver 34, the DMT transmitter 22 sends the predefined transmission signal 78 instead.

After transmission of the predefined transmission signal 78, the DMT transmitter 22 again attempts to send the same bit values that produced the clipped transmission signal 38 in a subsequent DMT symbol 70'. Because the generation of phase shifts in this embodiment is based on values that vary over time, the phase shifts computed for the subsequent DMT symbol 70' are different than those that were previously computed for the DMT symbol 70 with the clipped time domain sample. These different phase shifts are combined to the phase characteristics of the modulated carrier signals to produce carrier signals of the subsequent DMT symbol 70' with different phase characteristics than the carrier signals of the DMT symbol 70 with the clipped time domain sample.

DMT communication systems 2 infrequently produce transmission signals 38 that clip (e.g., approximately one clip every 10^7 time domain samples 70). However, if the subsequent DMT symbol 70' includes a time domain sample that clips, then the predefined transmission signal 78 is again transmitted (step 150) to the remote receiver 34 instead of the clipped transmission signal 38. The clipping time domain sample may be on the same or on a different carrier signal than the previously clipped DMT symbol 70. The DMT transmitter 22 repeats the transmission of the predefined transmission signal 78 until the DMT transmitter 22 produces a subsequent DMT symbol 70' that is not clipped. When the DMT transmitter 22 produces a DMT symbol 70' that is not clipped, the DTM transmitter 22 transmits (step 160) the transmission signal 38 to the remote receiver 34. The probability of a DMT symbol 70 producing a transmission signal 38 that clips in the time domain depends on the PAR of the transmission signal 38.

For example, the following phase shifting example, PST #4, illustrates the method used by the phase scrambler 66 to combine a different phase shift to the phase characteristic of each carrier signal to avoid the clipping of the transmission signal 38.

Phase Shifting Example #4

Phase shifting example #4 (PS #4) corresponds to adjusting the phase characteristic of the carrier signal associated with a carrier number N by $\frac{\pi}{3} \times (M + N)$, mod 2π, where M is the DMT symbol count. In this example, if the DMT symbol 70 clips when the DMT symbol count M equals 5, the predefined transmission signal 78 is transmitted instead of the current clipped transmission signal 38. On the following DMT symbol period, the DMT count M equals 6, thereby causing a different set of time domain samples to be generated for the subsequent DMT symbol 70', although the QAM symbols 58 used to produce both DMT symbols 70, 70' are the same.

If this different set of time domain samples (and consequently the transmission signal 38) is not clipped, the DMT transmitter 22 sends the transmission signal 38. If one of the time domain samples in the different set of time domain samples 70 (and consequently the transmission signal 38) is clipped, then the DMT transmitter 22 sends the predefined transmission signal 78 again. The process continues until a DMT symbol 70 is produced without a time domain sample 70 that is clipped. In one embodiment, the transmitter 22 stops attempting to produce a non-clipped DMT symbol 70' for the particular set of QAM symbols 58 after generating a predetermined number of clipped DMT symbols 70'. At that moment, the transmitter 22 can transmit the most recently produced clipped DMT symbol 70' or the predetermined transmission signal 78.

The PAR of the DSL communication system 2 is reduced because the predefined transmission signal 78 is sent instead of the transmission signal 38 when the DMT symbol 70 clips. For example, a DMT communication system 2 that normally has a clipping probability of 10-7 for the time domain transmission signal 38 can therefore operate with a 10-5 probability of clipping and a lower PAR equal to 12.8 dB (as compared to 14.5 dB). When operating at a 10-5 probability of clipping, assuming a DMT symbol 70 has 512 time-domain samples 70, the DMT transmitter 22 experiences one clipped DMT symbol 70 out of every $\frac{10^5}{512}$, or 195 DMT symbols 70. This results in the predefined (non-data carrying) transmission signal 78 being transmitted, on average, once every 195 DMT symbols.

DISH
Exhibit 1003 Page 137

Although increasing the probability of clipping to 10^{-5} results in approximately a 0.5% (1/195) decrease in throughput, the PAR of the transmission signal 38 is reduced by 1.7 dB, which reduces transmitter complexity in the form of power consumption and component linearity.

While the invention has been shown and described with reference to specific preferred embodiments, it should be understood by those skilled in the art that various changes in form and detail may be made therein without departing from the spirit and scope of the invention as defined by the following claims. For example, although the specification uses DSL to describe the invention, it is to be understood that various form of DSL can be used, e.g., ADSL, VDSL, SDSL, HDSL, HDSL2, or SHDSL. It is also to be understood that the principles of the invention apply to various types of applications transported over DSL systems (e.g., telecommuting, video conferencing, high speed Internet access, video-on demand).

Abstract

A system and method that demodulates~~scrambles~~ the phase characteristic of a carrier signal are described. The scrambling of the phase characteristic of each carrier signal includes associating a value with each carrier signal and computing a phase shift for each carrier signal based on the value associated with that carrier signal. The value is determined independently of any input bit value carried by that carrier signal. The phase shift computed for each carrier signal is combined with the phase characteristic of that carrier signal so as to substantially scramble the phase characteristic of the carrier signals. Bits of an input signal are modulated onto the carrier signals having the substantially scrambled phase characteristic to produce a transmission signal with a reduced PAR.

A System and Method for Descrambling the Phase of Carriers in a Multicarrier Communications System

Related Application

This application is a continuation of U.S. Application No. 13/284,549, filed October 28, 2011, which is a continuation of 11/860,080, filed September 24, 2007, now U.S. Patent No. 8,073,041, which is a divisional of U.S. Application No. 11/211,535, filed August 26, 2005, now U.S. Patent No. 7,292,627, which is a continuation of U.S. Application No. 09/710,310, filed on November 9, 2000, now U.S. Patent No. 6,961,369, which claims the benefit of the filing date of copending U.S. Provisional Application, Serial No. 60/164,134, filed November 9, 1999, entitled "A Method For Randomizing The Phase Of The Carriers In A Multicarrier Communications System To Reduce The Peak To Average Power Ratio Of The Transmitted Signal," each which are incorporated by reference herein in their entirety.

Field of the Invention

This invention relates to communications systems using multicarrier modulation. More particularly, the invention relates to multicarrier communications systems that lower the peak-to-average power ratio (PAR) of transmitted signals.

Background of the Invention

In a conventional multicarrier communications system, transmitters communicate over a communication channel using multicarrier modulation or Discrete Multitone Modulation (DMT). Carrier signals (carriers) or sub-channels spaced within a usable frequency band of the communication channel are modulated at a symbol (i.e., block) transmission rate of the system. An input signal, which includes input data bits, is sent to a DMT transmitter, such as a DMT modem. The DMT transmitter typically modulates the phase characteristic, or phase, and amplitude of the carrier signals using an Inverse Fast Fourier Transform (IFFT) to generate a time domain signal, or transmission signal, that represents the input signal. The DMT transmitter transmits the transmission signal, which is a linear combination of the multiple carriers, to a DMT receiver over the communication channel.

The phase and amplitude of the carrier signals of DMT transmission signal can be considered random because the phase and amplitude result from the modulation of an arbitrary sequence of input data bits comprising the transmitted information. Therefore, under the condition that the modulated data bit stream is random, the DMT transmission signal can be approximated as having a Gaussian probability distribution. A bit scrambler is often used in the DMT transmitter to scramble the input data bits before the bits are modulated to assure that the transmitted data bits are random and, consequently, that the modulation of those bits produces a DMT transmission signal with a Gaussian probability distribution.

With an appropriate allocation of transmit power levels to the carriers or sub-channels, such a system provides a desirable performance. Further, generating a transmission signal with a Gaussian probability distribution is important in order to transmit a transmission signal with a low peak-to-average ratio (PAR), or peak-to-average power ratio. The PAR of a transmission signal is the ratio of the instantaneous peak value (i.e., maximum magnitude) of a signal parameter (e.g., voltage, current, phase, frequency, power) to the time-averaged value of the signal parameter. In DMT systems, the PAR of the transmitted signal is determined by the probability of the random transmission signal reaching a certain peak voltage during the time interval required for a certain number of symbols. An example of the PAR of a transmission signal transmitted from a DMT transmitter is 14.5 dB, which is equivalent to having a 1E-7 probability of clipping. The PAR of a transmission signal transmitted and received in a DMT communication system is an important consideration in the design of the DMT communication system because the PAR of a signal affects the communication system's total power consumption and component linearity requirements of the system.

If the phase of the modulated carriers is not random, then the PAR can increase greatly. Examples of cases where the phases of the modulated carrier signals are not random are when bit scramblers are not used, multiple carrier signals are used to modulate the same input data bits, and the constellation maps, which are mappings of input data bits to the phase of a carrier signal, used for modulation are not random enough (i.e., a zero value for a data bit corresponds to a 90 degree phase characteristic of the DMT carrier signal and a one value

for a data bit corresponds to a -90 degree phase characteristic of the DMT carrier signal). An increased PAR can result in a system with high power consumption and/or with high probability of clipping the transmission signal. Thus, there remains a need for a system and method that can effectively scramble the phase of the modulated carrier signals in order to provide a low PAR for the transmission signal.

Summary of the Invention

The present invention features a system and method that scrambles the phase characteristics of the modulated carrier signals in a transmission signal. In one aspect, a value is associated with each carrier signal. A phase shift is computed for each carrier signal based on the value associated with that carrier signal. The value is determined independently of any input bit value carried by that carrier signal. The phase shift computed for each carrier signal is combined with the phase characteristic of that carrier signal to substantially scramble the phase characteristics of the carrier signals.

In one embodiment, the input bit stream is modulated onto the carrier signals having the substantially scrambled phase characteristic to produce a transmission signal with a reduced peak-to-average power ratio (PAR). The value is derived from a predetermined parameter, such as a random number generator, a carrier number, a DMT symbol count, a superframe count, and a hyperframe count. In another embodiment, a predetermined transmission signal is transmitted when the amplitude of the transmission signal exceeds a certain level.

In another aspect, the invention features a method wherein a value is associated with each carrier signal. The value is determined independently of any input bit value carried by that carrier signal. A phase shift for each carrier signal is computed based on the value associated with that carrier signal. The transmission signal is demodulated using the phase shift computed for each carrier signal.

In another aspect, the invention features a system comprising a phase scrambler that computes a phase shift for each carrier signal based on a value associated with that carrier signal. The phase scrambler also combines the phase shift computed for each carrier signal with the phase characteristic of that carrier signal to substantially scramble the phase characteristic of the carrier signals. In one embodiment, a modulator, in communication with

the phase scrambler, modulates bits of an input signal onto the carrier signals having the substantially scrambled phase characteristics to produce a transmission signal with a reduced PAR.

Description of the Drawings

The invention is pointed out with particularity in the appended claims. The advantages of the invention described above, as well as further advantages of the invention, may be better understood by reference to the following description taken in conjunction with the accompanying drawings, in which:

FIG. 1 is a block diagram of an embodiment of a digital subscriber line communications system including a DMT (discrete multitone modulation) transceiver, in communication with a remote transceiver, having a phase scrambler for substantially scrambling the phase characteristics of carrier signals; and

FIG. 2 is a flow diagram of an embodiment of a process for scrambling the phase characteristics of the carrier signals in a transmission signal.

Detailed Description

FIG. 1 shows a digital subscriber line (DSL) communication system 2 including a discrete multitone (DMT) transceiver 10 in communication with a remote transceiver 14 over a communication channel 18 using a transmission signal 38 having a plurality of carrier signals. The DMT transceiver 10 includes a DMT transmitter 22 and a DMT receiver 26. The remote transceiver 14 includes a transmitter 30 and a receiver 34. Although described with respect to discrete multitone modulation, the principles of the invention apply also to other types of multicarrier modulation, such as, but not limited to, orthogonally multiplexed quadrature amplitude modulation (OQAM), discrete wavelet multitone (DWMT) modulation, and orthogonal frequency division multiplexing (OFDM).

The communication channel 18 provides a downstream transmission path from the DMT transmitter 22 to the remote receiver 34, and an upstream transmission path from the remote transmitter 30 to the DMT receiver 26. In one embodiment, the communication channel 18 is a pair of twisted wires of a telephone subscriber line. In other embodiments, the communication channel 18 can be a fiber optic wire, a quad cable, consisting of two pairs of twisted wires, or a quad cable that is one of a star quad cable, a Dieselhorst-Martin quad

cable, and the like. In a wireless communication system wherein the transceivers 10, 14 are wireless modems, the communication channel 18 is the air through which the transmission signal 38 travels between the transceivers 10, 14.

By way of example, the DMT transmitter 22 shown in FIG. 1 includes a quadrature amplitude modulation (QAM) encoder 42, a modulator 46, a bit allocation table (BAT) 44, and a phase scrambler 66. The DMT transmitter 22 can also include a bit scrambler 74, as described further below. The remote transmitter 30 of the remote transceiver 14 comprises equivalent components as the DMT transmitter 22. Although this embodiment specifies a detailed description of the DMT transmitter 22, the inventive concepts apply also to the receivers 34, 26 which have similar components to that of the DMT transmitter 22, but perform inverse functions in a reverse order.

The QAM encoder 42 has a single input for receiving an input serial data bit stream 54 and multiple parallel outputs to transmit QAM symbols 58 generated by the QAM encoder 42 from the bit stream 54. In general, the QAM encoder 42 maps the input serial bit-stream 54 in the time domain into parallel QAM symbols 58 in the frequency domain. In particular, the QAM encoder 42 maps the input serial data bit stream 54 into N parallel quadrature amplitude modulation (QAM) constellation points 58, or QAM symbols 58, where N represents the number of carrier signals generated by the modulator 46. The BAT 44 is in communication with the QAM encoder 42 to specify the number of bits carried by each carrier signal. The QAM symbols 58 represent the amplitude and the phase characteristic of each carrier signal.

The modulator 46 provides functionality associated with the DMT modulation and transforms the QAM symbols 58 into DMT symbols 70 each comprised of a plurality of time-domain samples. The modulator 46 modulates each carrier signal with a different QAM symbol 58. As a result of this modulation, carrier signals have phase and amplitude characteristics based on the QAM symbol 58 and therefore based on the input-bit stream 54. In particular, the modulator 46 uses an inverse fast Fourier transform (IFFT) to change the QAM symbols 58 into a transmission signal 38 comprised of a sequence of DMT symbols 70. The modulator 46 changes the QAM symbols 58 into DMT symbols 70 through modulation of the carrier signals. In another embodiment, the modulator 46 uses the inverse

discrete Fourier transform (IDFT) to change the QAM symbols 58 into DMT symbols 70. In one embodiment, a pilot tone is included in the transmission signal 38 to provide a reference signal for coherent demodulation of the carrier signals in the remote receiver 34 during reception of the transmission signal 38.

The modulator 46 also includes a phase scrambler 66 that combines a phase shift computed for each QAM-modulated carrier signal with the phase characteristic of that carrier signal. Combining phase shifts with phase characteristics, in accordance with the principles of the invention, substantially scrambles the phase characteristics of the carrier signals in the transmission signal 38. By scrambling the phase characteristics of the carrier signals, the resulting transmission signal 38 has a substantially minimized peak-to-average (PAR) power ratio. The phase scrambler 66 can be part of or external to the modulator 46. Other embodiments of the phase scrambler 66 include, but are not limited to, a software program that is stored in local memory and is executed on the modulator 46, a digital signal processor (DSP) capable of performing mathematical functions and algorithms, and the like. The remote receiver 34 similarly includes a phase descrambler 66' for use when demodulating carrier signals that have had their phase characteristics adjusted by the phase scrambler 66 of the DMT transceiver 10.

To compute a phase shift for each carrier signal, the phase scrambler 66 associates one or more values with that carrier signal. The phase scrambler 66 determines each value for a carrier signal independently of the QAM symbols 58, and, therefore, independently of the bit value(s) modulated onto the carrier signal. The actual value(s) that the phase scrambler 66 associates with each carrier signal can be derived from one or more predefined parameters, such as a pseudo-random number generator (pseudo-RNG), a DMT carrier number, a DMT symbol count, a DMT superframe count, a DMT hyperframe count, and the like, as described in more detail below. Irrespective of the technique used to produce each value, the same technique is used by the DMT transmitter 22 and the remote receiver 34 so that the value associated with a given carrier signal is known at both ends of the communication channel 18.

The phase scrambler 66 then solves a predetermined equation to compute a phase shift for the carrier signal, using the value(s) associated with that carrier signal as input that

effects the output of the equation. Any equation suitable for computing phase shifts can be used to compute the phase shifts. When the equation is independent of the bit values of the input serial bit stream 54, the computed phase shifts are also independent of such bit values.

In one embodiment (shown in phantom), the DMT transmitter 22 includes a bit scrambler 74, which receives the input serial bit stream 54 and outputs data bits 76 that are substantially scrambled. The substantially scrambled bits 76 are then passed to the QAM encoder 42. When the bit scrambler 74 is included in the DMT transmitter 22, the operation of the phase scrambler 66 further assures that the transmission signal 38 has a Gaussian probability distribution and, therefore, a substantially minimized PAR.

FIG. 2 shows embodiments of a process used by the DMT transmitter 22 for adjusting the phase characteristic of each carrier signal and combining these carrier signals to produce the transmission signal 38. The DMT transmitter 22 generates (step 100) a value that is associated with a carrier signal. Because the value is being used to alter the phase characteristics of the carrier signal, both the DMT transmitter 22 and the remote receiver 34 must recognize the value as being associated with the carrier signal. Either the DMT transmitter 22 and the remote receiver 34 independently derive the associated value, or one informs the other of the associated value. For example, in one embodiment the DMT transmitter 22 can derive the value from a pseudo-RNG and then transmit the generated value to the remote receiver 34. In another embodiment, the remote receiver 34 similarly derives the value from the same pseudo-RNG and the same seed as used by the transmitter (i.e., the transmitter pseudo-RNG produces the same series of random numbers as the receiver pseudo-RNG).

As another example, the DMT transmitter 22 and the remote receiver 34 can each maintain a symbol counter for counting DMT symbols. The DMT transmitter 22 increments its symbol counter upon transmitting a DMT symbol; the remote receiver 34 upon receipt. Thus, when the DMT transmitter 22 and the remote receiver 34 both use the symbol count as a value for computing phase shifts, both the DMT transmitter 22 and remote receiver 34 "know" that the value is associated with a particular DMT symbol and with each carrier signal of that DMT symbol.

Values can also be derived from other types of predefined parameters. For example, if the predefined parameter is the DMT carrier number, then the value associated with a particular carrier signal is the carrier number of that signal within the DMT symbol. The number of a carrier signal represents the location of the frequency of the carrier signal relative to the frequency of other carrier signals within a DMT symbol. For example, in one embodiment the DSL communication system 2 provides 256 carrier signals, each separated by a frequency of 4.3125 kHz and spanning the frequency bandwidth from 0 kHz to 1104 kHz. The DMT transmitter 22 numbers the carrier signals from 0 to 255. Therefore, "DMT carrier number 50" represents the 51st DMT carrier signal which is located at the frequency of 215.625 kHz (i.e., 51 x 4.3125 kHz).

Again, the DMT transmitter 22 and the remote receiver 34 can know the value that is associated with the carrier signal because both the DMT transmitter 22 and the remote receiver 34 use the same predefined parameter (here, the DMT carrier number) to make the value-carrier signal association. In other embodiments (as exemplified above with the transmitter pseudo-RNG), the DMT transmitter 22 can transmit the value to the remote receiver 34 (or vice versa) over the communication channel 18.

In other embodiments, other predefined parameters can be used in conjunction with the symbol count. One example of such a predefined parameter is the superframe count that increments by one every 69 DMT symbols. One exemplary implementation that achieves the superframe counter is to perform a modulo 68 operation on the symbol count. As another example, the DMT transmitter 22 can maintain a hyperframe counter for counting hyperframes. An exemplary implementation of the hyperframe count is to perform a modulo 255 operation on the superframe count. Thus, the hyperframe count increments by one each time the superframe count reaches 255.

Accordingly, it is seen that some predefined parameters produce values that vary from carrier signal to carrier signal. For example, when the predefined parameter is the DMT carrier number, values vary based on the frequency of the carrier signal. As another example, the pseudo-RNG generates a new random value for each carrier signal.

Other predefined parameters produce values that vary from DMT symbol 70 to DMT symbol 70. For example, when the predefined parameter is the symbol count, the superframe

count, or hyperframe count, values vary based on the numerical position of the DMT symbol 70 within a sequence of symbols, superframes, or hyperframes. Predefined parameters such as the pseudo-RNG, symbol count, superframe count, and superframe can also be understood to be parameters that vary values over time. Any one or combination of the predefined parameters can provide values for input to the equation that computes a phase shift for a given carrier signal.

In one embodiment, the phase scrambling is used to avoid clipping of the transmission signal 38 on a DMT symbol 70 by DMT symbol 70 basis. In this embodiment, the DMT transmitter 22 uses a value based on a predefined parameter that varies over time, such as the symbol count, to compute the phase shift. It is to be understood that other types of predefined parameters that vary the values associated with carrier signals can be used to practice the principles of the invention. As described above, the transceivers 10, 14 may communicate (step 110) the values to synchronize their use in modulating and demodulating the carrier signals.

The DMT transmitter 22 then computes (step 115) the phase shift that is used to adjust the phase characteristic of each carrier signal. The amount of the phase shift combined with the phase characteristic of each QAM-modulated carrier signal depends upon the equation used and the one or more values associated with that carrier signal.

The DMT transmitter 22 then combines (step 120) the phase shift computed for each carrier signal with the phase characteristic of that carrier signal. By scrambling the phase characteristics of the carrier signals, the phase scrambler 66 reduces (with respect to unscrambled phase characteristics) the combined PAR of the plurality of carrier signals and, consequently, the transmission signal 38. The following three phase shifting examples, PS #1-PS #3, illustrate methods used by the phase scrambler 66 to combine a computed phase shift to the phase characteristic of each carrier signal.

Phase Shifting Example #1

Phase shifting example #1 (PS #1) corresponds to adjusting the phase characteristic of the QAM-modulated carrier signal associated with a carrier number N by $N \times \frac{\pi}{3,}$ modulo (mod) 2π. In this example, a carrier signal having a carrier number N equal to 50 has a phase shift added to the phase characteristic of that carrier signal equal to $50 \times \frac{\pi}{3}$ (mod 2π) = $\frac{2}{3}$ π. The carrier signal with a carrier number N equal to 51 has a phase shift added to the phase characteristic of that carrier signal equal to $51 \times \frac{\pi}{3}$ (mod2π)=π. The carrier signal with the carrier number N equal to 0 has no phase shift added to the phase characteristic of that carrier signal.

Phase Shifting Example #2

Phase shifting example #2 (PS #2) corresponds to adjusting the phase characteristic of the QAM-modulated carrier signal associated with a carrier number N by $(N + M) \times \frac{\pi}{4}$, mod 2π, where M is the symbol count. In this example, a carrier signal having a carrier number N equal to 50 on DMT symbol count M equal to 8 has a phase shift added to the phase characteristic of that carrier signal equal to $(50 + 8) \times \frac{\pi}{4}$ (mod 2π)= $\frac{\pi}{2}$. The carrier signal with the same carrier number N equal to 50 on the next DMT symbol count M equal to 9 has a phase shift added to the phase characteristic of that carrier signal equal to $(50 + 9) \times \frac{\pi}{4}$ (mod 2π) = $\frac{3\pi}{4}$.

Phase Shifting Example #3

Phase shifting example #3 (PS #3) corresponds to adjusting the phase characteristic of the QAM-modulated carrier signal associated with a carrier number N by $(X_N) \times \frac{\pi}{6}, \mathrm{mod}\, 2\pi,$

where XN is an array of N pseudo-random numbers. In this example, a carrier signal having a carrier number N equal to 5 and XN equal to [3, 8, 1, 4, 9, 5, . . .] has a phase shift added to the phase characteristic of the carrier signal that is equal to $(9)\times\frac{\pi}{6}(\mathrm{mod}\,2\pi)=\frac{3\pi}{2}$ (Note that 9 is the 5th value in XN.) The carrier signal with a carrier number N equal to 6 has a phase shift added to the phase characteristic of the carrier signal equal to $(5)\times\frac{\pi}{6}(\mathrm{mod}\,2\pi)=\frac{5\pi}{6}$.

It is to be understood that additional and/or different phase shifting techniques can be used by the phase scrambler 66, and that PS #1, #2, and #3 are merely illustrative examples of the principles of the invention. The DMT transmitter 22 then combines (step 130) the carrier signals to form the transmission signal 38. If the transmission signal is not clipped, as described below, the DMT transmitter 22 consequently transmits (step 160) the transmission signal 38 to the remote receiver 34.

Clipping of Transmission Signals

A transmission signal 38 that has high peak values of voltage (i.e., a high PAR) can induce non-linear distortion in the DMT transmitter 22 and the communication channel 18. One form of this non-linear distortion of the transmission signal 38 that may occur is the limitation of the amplitude of the transmission signal 38 (i.e., clipping). For example, a particular DMT symbol 70 clips in the time domain when one or more time domain samples in that DMT symbol 70 are larger than the maximum allowed digital value for the DMT symbols 70. In multicarrier communication systems when clipping occurs, the transmission signal 38 does not accurately represent the input serial data bit signal 54.

In one embodiment, the DSL communication system 2 avoids the clipping of the transmission signal 38 on a DMT symbol 70 by DMT symbol 70 basis. The DMT transmitter 22 detects (step 140) the clipping of the transmission signal 38. If a particular DMT symbol 70 clips in the time domain to produce a clipped transmission signal 38, the DMT transmitter 22 substitutes (step 150) a predefined transmission signal 78 for the clipped transmission signal 38.

The predefined transmission signal 78 has the same duration as a DMT symbol 70 (e.g., 250 ms) in order to maintain symbol timing between the DMT transmitter 22 and the remote receiver 34. The predefined transmission signal 78 is not based on (i.e., independent of) the modulated input data bit stream 54; it is a bit value pattern that is recognized by the remote receiver 34 as a substituted signal. In one embodiment, the predefined transmission signal 78 is a known pseudo-random sequence pattern that is easily detected by the remote receiver 34. In another embodiment, the predefined transmission signal 78 is an "all zeros" signal, which is a zero voltage signal produced at the DMT transmitter 22 output (i.e., zero volts modulated on all the carrier signals). In addition to easy detection by the remote receiver 34, the zero voltage signal reduces the power consumption of the DMT transmitter 22 when delivered by the DMT transmitter 22. Further, a pilot tone is included in the predefined transmission signal 78 to provide a reference signal for coherent demodulation of the carrier signals in the remote receiver 34 during reception of the predefined transmission signal 78.

After the remote receiver 34 receives the transmission signal 38, the remote receiver 34 determines if the transmission signal 38 is equivalent to the predefined transmission signal 78. In one embodiment, when the remote receiver 34 identifies the predefined transmission signal 78, the remote receiver 34 ignores (i.e., discards) the predefined transmission signal 78.

Following the transmission of the predefined transmission signal 78, the phase scrambler 66 shifts (step 120) the phase characteristic of the QAM-modulated carrier signals (based on one of the predefined parameters that varies over time). For example, consider that a set of QAM symbols 58 produces a DMT symbol 70 comprising a plurality of time domain samples, and that one of the time domain samples is larger than the maximum allowed digital value for the DMT symbol 70. Therefore, because the transmission signal 38 would be clipped when sent to the remote receiver 34, the DMT transmitter 22 sends the predefined transmission signal 78 instead.

After transmission of the predefined transmission signal 78, the DMT transmitter 22 again attempts to send the same bit values that produced the clipped transmission signal 38 in a subsequent DMT symbol 70'. Because the generation of phase shifts in this embodiment is

based on values that vary over time, the phase shifts computed for the subsequent DMT symbol 70' are different than those that were previously computed for the DMT symbol 70 with the clipped time domain sample. These different phase shifts are combined to the phase characteristics of the modulated carrier signals to produce carrier signals of the subsequent DMT symbol 70' with different phase characteristics than the carrier signals of the DMT symbol 70 with the clipped time domain sample.

DMT communication systems 2 infrequently produce transmission signals 38 that clip (e.g., approximately one clip every 10^7 time domain samples 70). However, if the subsequent DMT symbol 70' includes a time domain sample that clips, then the predefined transmission signal 78 is again transmitted (step 150) to the remote receiver 34 instead of the clipped transmission signal 38. The clipping time domain sample may be on the same or on a different carrier signal than the previously clipped DMT symbol 70. The DMT transmitter 22 repeats the transmission of the predefined transmission signal 78 until the DMT transmitter 22 produces a subsequent DMT symbol 70' that is not clipped. When the DMT transmitter 22 produces a DMT symbol 70' that is not clipped, the DTM transmitter 22 transmits (step 160) the transmission signal 38 to the remote receiver 34. The probability of a DMT symbol 70 producing a transmission signal 38 that clips in the time domain depends on the PAR of the transmission signal 38.

For example, the following phase shifting example, PST #4, illustrates the method used by the phase scrambler 66 to combine a different phase shift to the phase characteristic of each carrier signal to avoid the clipping of the transmission signal 38.

Phase Shifting Example #4

Phase shifting example #4 (PS #4) corresponds to adjusting the phase characteristic of the carrier signal associated with a carrier number N by $\frac{\pi}{3} \times (M + N)$, mod 2π, where M is the DMT symbol count. In this example, if the DMT symbol 70 clips when the DMT symbol count M equals 5, the predefined transmission signal 78 is transmitted instead of the current clipped transmission signal 38. On the following DMT symbol period, the DMT count M equals 6, thereby causing a different set of time domain samples to be generated for the subsequent DMT symbol 70', although the QAM symbols 58 used to produce both DMT symbols 70, 70' are the same.

If this different set of time domain samples (and consequently the transmission signal 38) is not clipped, the DMT transmitter 22 sends the transmission signal 38. If one of the time domain samples in the different set of time domain samples 70 (and consequently the transmission signal 38) is clipped, then the DMT transmitter 22 sends the predefined transmission signal 78 again. The process continues until a DMT symbol 70 is produced without a time domain sample 70 that is clipped. In one embodiment, the transmitter 22 stops attempting to produce a non-clipped DMT symbol 70' for the particular set of QAM symbols 58 after generating a predetermined number of clipped DMT symbols 70'. At that moment, the transmitter 22 can transmit the most recently produced clipped DMT symbol 70' or the predetermined transmission signal 78.

The PAR of the DSL communication system 2 is reduced because the predefined transmission signal 78 is sent instead of the transmission signal 38 when the DMT symbol 70 clips. For example, a DMT communication system 2 that normally has a clipping probability of 10-7 for the time domain transmission signal 38 can therefore operate with a 10-5 probability of clipping and a lower PAR equal to 12.8 dB (as compared to 14.5 dB). When operating at a 10-5 probability of clipping, assuming a DMT symbol 70 has 512 time-domain samples 70, the DMT transmitter 22 experiences one clipped DMT symbol 70 out of every $\frac{10^5}{512}$, or 195 DMT symbols 70. This results in the predefined (non-data carrying) transmission signal 78 being transmitted, on average, once every 195 DMT symbols.

DISH
Exhibit 1003 Page 153

Although increasing the probability of clipping to 10^{-5} results in approximately a 0.5% (1/195) decrease in throughput, the PAR of the transmission signal 38 is reduced by 1.7 dB, which reduces transmitter complexity in the form of power consumption and component linearity.

While the invention has been shown and described with reference to specific preferred embodiments, it should be understood by those skilled in the art that various changes in form and detail may be made therein without departing from the spirit and scope of the invention as defined by the following claims. For example, although the specification uses DSL to describe the invention, it is to be understood that various form of DSL can be used, e.g., ADSL, VDSL, SDSL, HDSL, HDSL2, or SHDSL. It is also to be understood that the principles of the invention apply to various types of applications transported over DSL systems (e.g., telecommuting, video conferencing, high speed Internet access, video-on demand).

Abstract

A system and method that demodulates the phase characteristic of a carrier signal are described. The scrambling of the phase characteristic of each carrier signal includes associating a value with each carrier signal and computing a phase shift for each carrier signal based on the value associated with that carrier signal. The value is determined independently of any input bit value carried by that carrier signal. The phase shift computed for each carrier signal is combined with the phase characteristic of that carrier signal so as to substantially scramble the phase characteristic of the carrier signals. Bits of an input signal are modulated onto the carrier signals having the substantially scrambled phase characteristic to produce a transmission signal with a reduced PAR.

ANNOTATED SHEET

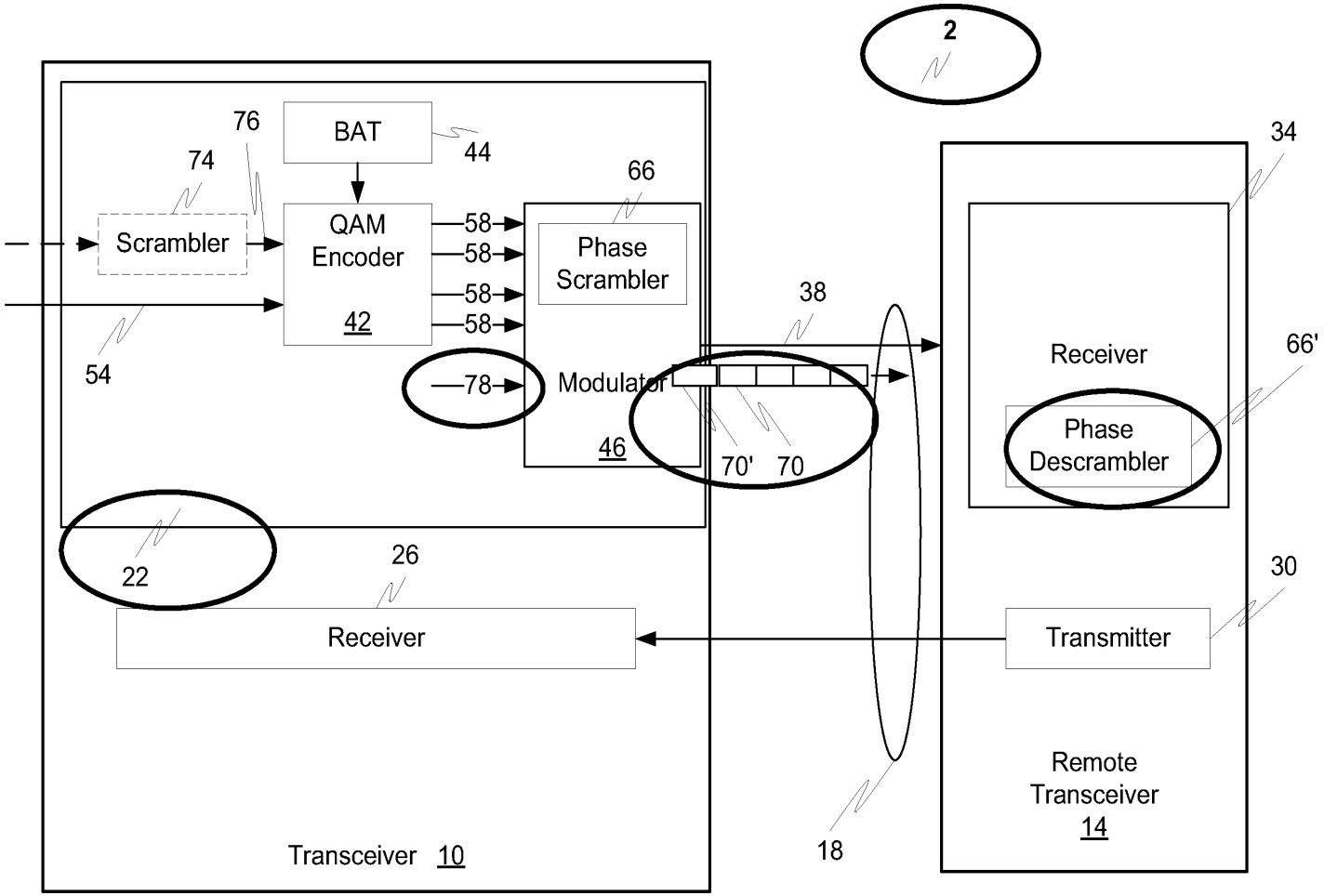

FIG. 1

DISH
Exhibit 1003 Page 156

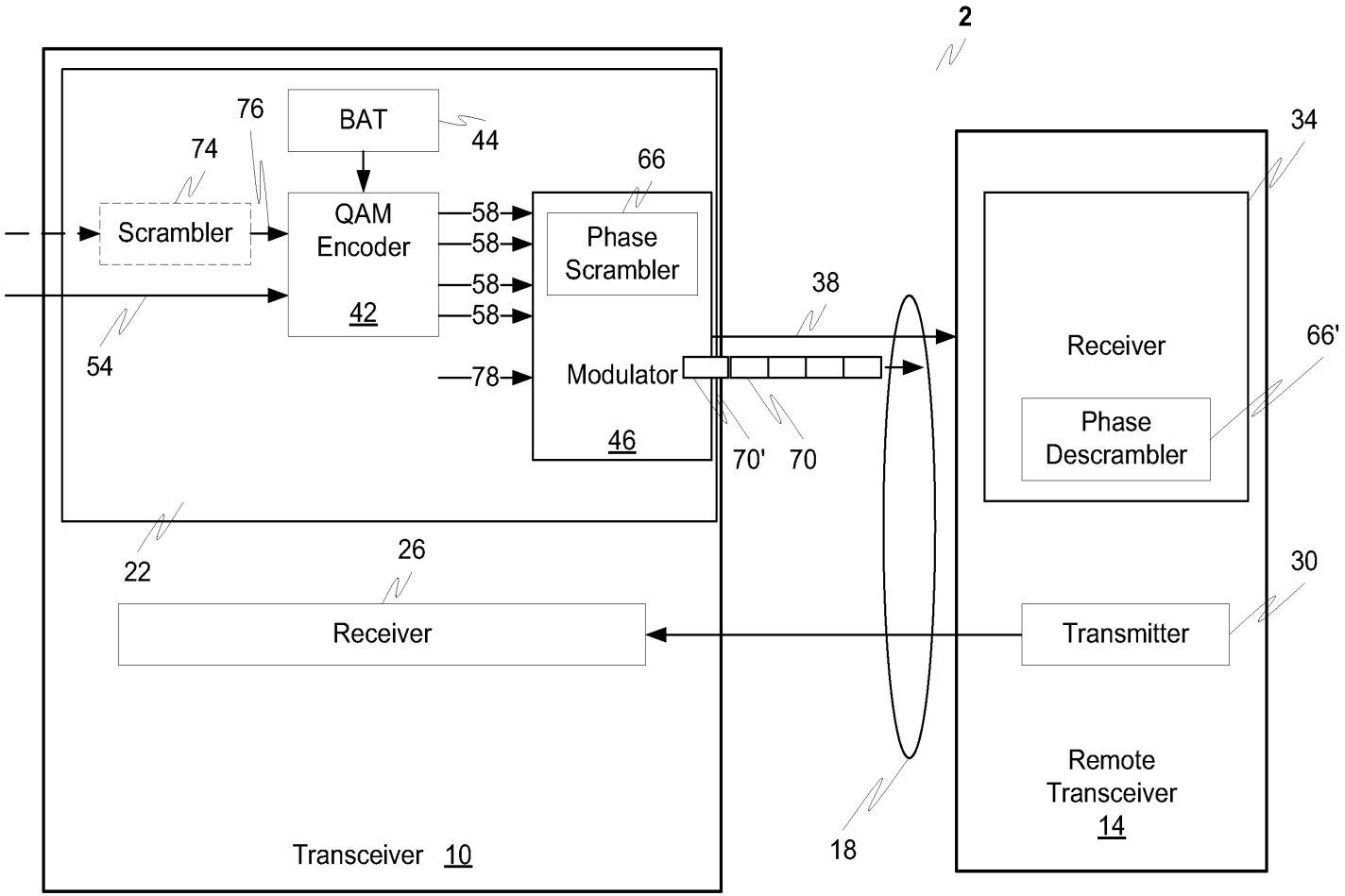

FIG. 1

DISH
Exhibit 1003 Page 157

IN THE UNITED STATES PATENT AND TRADEMARK OFFICE

In Re the Application of:	)	Group Art Unit:
TZANNES, Marcos C.	)	Confirmation No.:
Serial No.:	)	Examiner: Not Yet Assigned
Filed: Herewith	)	
Atty. File No.: 5550-47-CON-DIV-CON-2	)	INFORMATION DISCLOSURE STATEMENT
Entitled: "System and Method for Descrambling the Phase of the Carriers in a Multicarrier Communications System"	)	Electronically Submitted

Commissioner for Patents
P.O. Box 1450
Alexandria, VA 22313-1450

Dear Sir:

The references cited on attached Form PTO-1449 are being called to the attention of the Examiner.

☒ Copies of the cited non-patent and/or foreign references are enclosed herewith.

☐ Copies of the cited U.S. patents and/or patent applications are enclosed herewith.

☒ Copies of the cited U.S. patents/patent application publications are not enclosed in accordance with 37 C.F.R. § 1.98(a).

☐ Copies of the cited references are not enclosed, in accordance with 37 C.F.R. § 1.98(d), because the references were cited by or submitted to the U.S. Patent and Trademark Office in prior application Serial No. _____ filed _____, which is relied upon for an earlier filing date under 35 U.S.C. § 120.

☒ To the best of applicants' belief, the pertinence of the foreign-language references are believed to be summarized in the attached English abstracts and/or in the figures, although applicants do not necessarily vouch for the accuracy of the translation.

☒ Examiner's attention is drawn to the following related applications:

- Serial No. 09/710,310 filed 11/09/2000 now U.S. Patent No. 6,961,369 (Attorney's Ref. No. 5550-47)
- Serial No. 11/211,535 filed 08/26/2005 now U.S. Patent No. 7,292,627 (Attorney's Ref. No. 5550-47-CON)
- Serial No. 11/860,080 filed 09/24/2007 now U.S. Patent No. 8,073,041 (Attorney's Ref. No. 5550-47-CON-DIV)

- Serial No. 13/284,549 filed 10/28/2011 (Attorney's Ref. No. 5550-47-CON-DIV-CON)
- Serial No. 11/863,581 filed 09/28/2007 now U.S. Patent No. 7,471,721 (Attorney's Ref. No. 5550-47-CON-2)
- Serial No. 12/255,713 filed 10/22/2008 now U.S. Patent No. 7,769,104 (Attorney's Ref. No. 5550-47-CON-3)
- Serial No. 12/783,725 filed 05/20/2010 now U.S. Patent No. 8,090,008 (Attorney's Ref. No. 5550-47-CON-4)
- Serial No. 13/303,417 filed 11/23/2011 (Attorney's Ref. No. 5550-47-CON-5)

☐ Other:_____

Submission of the above information is not intended as an admission that any item is citable under the statutes or rules to support a rejection, that any item disclosed represents analogous art, or that those skilled in the art would refer to or recognize the pertinence of any reference without the benefit of hindsight, nor should an inference be drawn as to the pertinence of the references based on the order in which they are presented. Submission of this statement should not be taken as an indication that a search has been conducted, or that no better art exists.

It is respectfully requested that the cited information be expressly considered during the prosecution of this application and the references made of record therein.

FEES

☒	**37 CFR 1.97(b)**: No fee is believed due in connection with this submission, because the information disclosure statement submitted herewith is satisfied by one of the following conditions ("X" indicates satisfaction): ☐ Within three months of the filing date of a national application other than a continued prosecution application under 37 CFR 1.53(d), or ☐ Within three months of the date of entry of the national stage as set forth in § 1.491 in an international application, or ☒ Before the mailing date of a first Office Action on the merits, or ☐ Before the mailing of a first Office action after the filing of a request for continued examination under 37 CFR 1.114. Although no fee is believed due, if any fee is deemed due in connection with this submission, please charge such fee to Deposit Account 19-1970.
☐	**37 CFR 1.97(c)**: The information disclosure statement transmitted herewith is being filed after all the above conditions (37 CFR 1.97(b)), but before the mailing date of any one of the following conditions: (1) a final action under 37 C.F.R. 1.113, or (2) a notice of allowance under 37 C.F.R. 1.311, or (3) an action that otherwise closes prosecution in the application. This Information Disclosure Statement is accompanied by: ☐ A Certification (below) as specified by 37 C.F.R. 1.97(e). Although no fee is believed due, if any fee is deemed due in connection with this submission, please charge such fee to Deposit Account 19-1970. OR ☐ Please charge Deposit Account 19-1970 in the amount of $180.00 for the fee set forth in 37 C.F.R. 1.17(p) for submission of an information disclosure statement. Please credit any overpayment or charge any underpayment to Deposit Account 19-1970.

DISH
Exhibit 1003 Page 159

☐	**37 CFR 1.97(d)**: This Information Disclosure Statement is being submitted after the period specified in 37 CFR 1.97(c). ☐ This information Disclosure Statement includes a Certification (below) as specified by 37 C.F.R. 1.97(e) AND ☐ Applicants hereby requests consideration of the reference(s) disclosed herein. Please charge Deposit Account 19-1970 in the amount of $180.00 under 37 C.F.R. 1.17(p). Please credit any overpayment or charge any underpayment to Deposit Account 19-1970. Election to pay the fee should not be taken as an indication that applicant(s) cannot execute a certification.

Certification (37 C.F.R. 1.97(e))
(Applicable only if checked)

☐ The undersigned certifies that:

☐ Each item of information contained in this information disclosure statement was first cited in any communication from a foreign patent office in a counterpart foreign application not more than three months prior to the filing of this statement. 37 C.F.R. 1.97(e)(1).

☐ A copy of the communication from the foreign patent office is enclosed.

OR

☐ No item of information contained in this information disclosure statement was cited in a communication from a foreign patent office in a counterpart foreign application, and, to the knowledge of the undersigned after making reasonable inquiry, no item of information contained in this Information Disclosure Statement was known to any individual designated in 37 C.F.R. 1.56(c) more than three months prior to the filing of this statement. 37 C.F.R. 1.97(e)(2).

Respectfully submitted,

SHERIDAN ROSS P.C.

By: _____

Jason H. Vick
Registration No. 45,285
1560 Broadway, Suite 1200
Denver, Colorado 80202-5141
(303) 863-9700

Date: 4 Apr '12

DISH
Exhibit 1003 Page 160

Substitute for form 1449A/PTO				Complete if Known	
INFORMATION DISCLOSURE STATEMENT BY APPLICANT				Application Number	
				Filing Date	
				First Named Inventor	Marcos C. Tzannes
				Art Unit	
				Examiner Name	Not Yet Assigned
Sheet	1	of	4	Attorney Docket Number	5550-47-CON-DIV-CON-2

U.S. PATENT DOCUMENTS					
Examiner Initials*	Cite No.[1]	Document Number Number-kind Code [2] *(if known)*	Publication Date MM-DD-YYYY	Name of Patentee of Applicant of Cited Document	Pages, Columns, Lines, Where Relevant Passages or Relevant Figures Appear
	1	3898566	08/05/1975	Switzer et al.	
	2	3955141	05/01/1976	Lyon et al.	
	3	4069392	01/17/1978	Goldenberg et al.	
	4	4358853	11/09/1982	Qureshi	
	5	4985900	01/01/1991	Rhind et al.	
	6	5381449	01/10/1995	Jasper et al.	
	7	5682376	10/28/1997	Hayashino et al.	
	8	5694395	12/02/1997	Myer et al.	
	9	5748677	05/01/1998	Kumar	
	10	5870016	02/09/1999	Shrestha	
	11	5937010	08/10/1999	Petranovich et al.	
	12	5991262	11/23/1999	Laird et al.	
	13	6128350	10/03/2000	Shastri et al.	
	14	6256355	07/03/2001	Sakoda et al.	
	15	6366555	04/02/2002	Gatherer et al.	
	16	6507585	01/01/2003	Dobson	
	17	6519292	02/11/2003	Sakoda et al.	
	18	6590860	07/08/2003	Sakoda et al.	
	19	6704317	03/01/2004	Dobson	
	20	6757299	06/29/2004	Verma	
	21	6961369	11/01/2005	Tzannes	
	22	6967997	11/22/2005	Humphrey	
	23	7257168	08/14/2007	Goldstein et al.	
	24	7286614	10/23/2007	Goldstein et al.	
	25	7292627	11/06/2007	Tzannes	
	26	7471721	12/30/2008	Tzannes	
	27	7610028	10/27/2009	Cimini, Jr. et al.	
	28	7769104	08/03/2010	Tzannes	
	29	8073041	12/06/2011	Tzannes	
	30	8090008	01/03/2012	Tzannes	
	31	2005/0141410	06/30/2005	Zhang et al.	
	32	2006/0092902	05/04/2006	Schmidt	

Examiner Signature		Date Considered	

*EXAMINER: Initial if reference is considered, whether or not citation is in conformance and not considered. Include copy of this form with next communication to applicant.

Substitute for form 1449A/PTO				Complete if Known	
INFORMATION DISCLOSURE STATEMENT BY APPLICANT				Application Number	
				Filing Date	
				First Named Inventor	Marcos C. Tzannes
				Art Unit	
				Examiner Name	Not Yet Assigned
Sheet	2	of	4	Attorney Docket Number	5550-47-CON-DIV-CON-2

	33	2006/0140288	06/29/2006	Holden	
	34	2010/0190507	07/29/2010	Karabinis et al.	
	35	2012/0044977	02/23/2012	Tzannes	
	36	2012/0069878	03/22/2012	Tzannes	

FOREIGN PATENT DOCUMENTS

Examiner Initials*	Cite No.[1]	Foreign Patent Document Country Code[3]; Number[4]; Kind Code[5] *(if known)*	Publication Date MM-DD-YYYY	Name of Patentee or Applicant of Cited Document	Pages, Columns, Lines, Where Relevant Passages or Relevant Figures Appear	T[6]
	37	EP 0584534	03/02/1994	ALCATEL ITALIA		
	38	EP 0719004	06/26/1996	MATSUSHITA ELECTRIC IND CO LTD		
	39	GB 2330491	04/21/1999	BRITISH BROADCASTING CORP		
	40	JP H10(1998)-084329	03/31/1998	NIPPON HOSO KYOKAI		(Translated Abstract and partial translation)
	41	JP H08(1996)-321820	12/03/1996	MATSUSHITA ELECTRIC IND CO LTD		(Translated Abstract)
	42	WO 98/32065	07/23/1998	FORTRESS TECHNOLOGIES INC		
	43	WO 99/22463	05/06/1999	MOTOROLA INC		
	44	WO 99/29078	06/10/1999	TELIA AB		

Examiner Signature		Date Considered	

*EXAMINER: Initial if reference is considered, whether or not citation is in conformance and not considered. Include copy of this form with next communication to applicant.

Substitute for form 1449A/PTO				Complete if Known	
INFORMATION DISCLOSURE STATEMENT BY APPLICANT				Application Number	
				Filing Date	
				First Named Inventor	Marcos C. Tzannes
				Art Unit	
				Examiner Name	Not Yet Assigned
Sheet	3	of	4	Attorney Docket Number	5550-47-CON-DIV-CON-2

OTHER ART (Including Author, Title, Date, Pertinent Pages, etc.)		
Examiner Initials*	Cite No.[1]	
	45	BÄUML et al., "Reducing The Peak-To-Average Power Ratio Of Multicarrier Modulation By Selected Mapping," Electronics Letters, GB, IEE Stevenage, Vol. 32(22), Oct. 24, 1996, pp. 2056-2057, XP000643915 ISSN: 0013-5194
	46	HENKEL, "Analog Codes for Peak-to-Average Ratio Reduction," in Proceedings 3rd ITG Conf. Source and Channel Coding, Munich, Germany, Jan. 2000, 5 pages
	47	NARAHASHI et al., "New phasing scheme of N multiple carriers for reducing peak-to-average power ratio," Electronics Letters, Aug. 1994, Vol. 30(17), pp. 1382-83
	48	TELLADO et al., "Revisiting DMT's Peak-to-Average Ratio," Antwerp, Apr. 20-24, 1998, pp. 1-14
	49	TELLAMBURA, "A coding technique for reducing peak-to-average power ratio in OFDM," In the Proceedings of Global Telecommunications Conference, IEEE, Nov. 1998, pp. 2783-2787
	50	TELLAMBURA, "Phase optimisation criterion for reducing peak-to-average power ratio in OFDM," Electronics Letters, Jan. 1998, Vol. 34(2), pp. 169-170
	51	VAN EETVELT et al., "Peak to average power reduction for OFDM schemes by selective scrambling," Electronics Letters, Oct. 1996, Vol. 32(21), pp. 1963-64
	52	Invitation to Pay Additional Fees for International (PCT) Patent Application No. PCT/US00/30958, mailed March 23, 2001 (Attorney Ref. No. 5550-47-PCT)
	53	Invitation to Restrict or to Pay Additional Fees for International (PCT) Patent Application No. PCT/US00/30958, mailed Nov. 14, 2001 (Attorney Ref. No. 5550-47-PCT)
	54	Copy of Annex to Form PCT/ISA/206 for PCT/US00/30958, Mar. 23, 2001, 3 pages (5550-47-PCT)
	55	International Search Report for International (PCT) Patent Application No. PCT/US00/30958, mailed Jun. 12, 2001 (Attorney Ref. No. 5550-47-PCT)
	56	International Preliminary Examination Report for International (PCT) Patent Application No. PCT/US00/30958, completed March 4, 2002 (Attorney Ref. No. 5550-47-PCT)
	57	Written Opinion for International (PCT) Patent Application No. PCT/US00/30958, mailed Dec. 18, 2001 (Attorney Ref. No. 5550-47-PCT)
	58	Notification of Reasons for Refusal (including translation) for Japanese Patent Application No. 2001-537217, date of dispatch, Mar. 3, 2008 (Attorney Ref. No. 5550-47-PJP)

Examiner Signature		Date Considered	

*EXAMINER: Initial if reference is considered, whether or not citation is in conformance and not considered. Include copy of this form with next communication to applicant.

Substitute for form 1449A/PTO				Complete if Known	
INFORMATION DISCLOSURE STATEMENT BY APPLICANT				Application Number	
				Filing Date	
				First Named Inventor	Marcos C. Tzannes
				Art Unit	
				Examiner Name	Not Yet Assigned
Sheet	4	of	4	Attorney Docket Number	5550-47-CON-DIV-CON-2

	59	Decision of Refusal (including translation) for Japanese Patent Application No. 2001-537217, date of dispatch, Nov. 4, 2008 (Attorney Ref. No. 5550-47-PJP)
	60	Notice of Preliminary Rejection (translation only) for Korean Patent Application No. 7005830/2002 dated Nov. 22, 2006 (Attorney Ref. No. 5550-47-PKR)
	61	Official Action for U.S. Patent Application No. 09/710,310, mailed May 4, 2004 (Attorney Ref. No. 5550-47)
	62	Notice of Allowance for U.S. Patent Application No. 09/710,310, mailed Jul 5, 2005 (Attorney Ref. No. 5550-47)
	63	Notice of Allowance for U.S. Patent Application No. 11/211,535, mailed Sep. 6, 2007 (Attorney Ref. No. 5550-47-CON)
	64	Notice of Allowance for U.S. Patent Application No. 11/860,080, mailed Oct. 17, 2011 (Attorney Ref. No. 5550-47-CON-DIV)
	65	Notice of Allowance for U.S. Patent Application No. 13/284,549, mailed March 20, 2012 (Attorney Ref. No. 5550-47-CON-DIV-CON)
	66	Official Action for U.S. Patent Application No. 11/863,581, mailed Feb. 6, 2008 (Attorney Ref. No. 5550-47-CON-2)
	67	Notice of Allowance for U.S. Patent Application No. 11/863,581, mailed Oct. 8, 2008 (Attorney Ref. No. 5550-47-CON-2)
	68	Official Action for U.S. Patent Application No. 12/255,713, mailed Oct. 15, 2009 (Attorney Ref. No. 5550-47-CON-3)
	69	Notice of Allowance for U.S. Patent Application No. 12/255,713, mailed May 18, 2010 (Attorney Ref. No. 5550-47-CON-3)
	70	Notice of Allowance for U.S. Patent Application No. 12/783,725, mailed Nov. 17, 2011 (Attorney Ref. No. 5550-47-CON-4)

Examiner Signature		Date Considered	

*EXAMINER: Initial if reference is considered, whether or not citation is in conformance and not considered. Include copy of this form with next communication to applicant.

(19) Europäisches Patentamt
European Patent Office
Office européen des brevets

(11) Publication number: **0 584 534 A1**

(12) **EUROPEAN PATENT APPLICATION**

(21) Application number: **93111722.0**

(51) Int. Cl.[5]: **H04L 27/34**

(22) Date of filing: **22.07.93**

(30) Priority: **27.07.92 IT MI921819**

(43) Date of publication of application:
02.03.94 Bulletin 94/09

(84) Designated Contracting States:
CH DE ES FR GB LI NL SE

(71) Applicant: **ALCATEL ITALIA S.p.A.**
Via L. Bodio, 33/39
I-20158 Milano(IT)

(72) Inventor: **Sandri, Andrea**
Via Liguria, 6
I-56124 Pisa(IT)
Inventor: **Spalvieri, Arnaldo**
Via La Marca, 40/I
I-60019 Senigallia (AN)(IT)

(74) Representative: **Pohl, Herbert, Dipl.-Ing et al**
Alcatel SEL AG
Patent- und Lizenzwesen
Postfach 30 09 29
D-70449 Stuttgart (DE)

(54) **Method and apparatus for reducing the peak power of data sequences.**

(57) This application concerns the reduction of the peak power of data sequences, particularly for use in a QAM radio relay system. The peak power reduction leads to fewer problems with non-linear distortion, whether caused by the channel, or by the transmitter power amplifier.

The power reduction is achieved by using a shaping code, which replaces sequences with high power, by sequences with lower power.

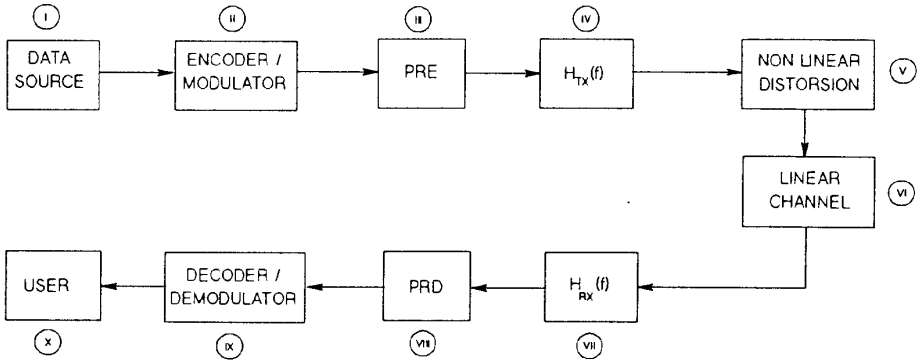

Fig. 1

EP 0 584 534 A1

Background of the invention

The present invention relates to a method of reducing the peak power of the signal at the output of the transmit filter of a digital link, e.g. a microwave one. Such reduction allows to minimize the effects of the transmit channel nonlinearity, including in it eventual nonlinearities of the transmit amplifier.

State of the art

The present digital transmission systems try to obtain high spectral efficiencies through gradually more complex modulation formats. The higher spectral efficiency is counterbalanced by the need of increasing the transmitted power to obtain a prefixed BER (Bit Error Rate: number of wrong bits to total number of bits ratio) value at the receiver. The power delivered by the transmitter generally is limited by the final power amplifier, which has a greatly nonlinear behaviour.

Therefore a serious problem arises with regard to the best exploitation of the nonlinear part of the input-output characteristic of the "channel", including in the latter the final amplifier of the transmitter. At present the problem is faced in one of the following ways (see e.g. the papers of G. Karam, H. Sari, "Analysis of predistortion, equalization and ISI cancellation techniques in digital radio systems with nonlinear transmit amplifier", IEEE Transaction on Communications, vol. 37, n. 12, Dec. 1989):

1) data predistortion: one tries to modify the constellation used for driving the nonlinear amplifier through a signal such as to obtain the desired constellation at its output;

2) analog signal predistortion: a nonlinear circuit having a characteristic opposite to the one of the above-defined "channel", is inserted in the path of the analog signal;

3) channel equalization and nonlinear cancellation of the ISI: the receive equalizer tries to cancel the interferences connected with nonlinearity from the present signal sample (through a suitable nonlinear combination of pre- and post-cursors);

4) use of "circular" constellations so as to reduce the ratio between the peak power and the average power of the not-filtered signal.

All the above solutions, under special circumstances, can provide unsatisfactory features. In particular the first three ones are not much efficient in the presence of hard limiter characteristic of the transmitter final amplifier; the last one gives rise to gains anyway slight which can be not sufficient in case of reception filter with very narrow band.

Summary of the invention

It is an object of the invention to individuate a base-band system which - at parity of other conditions - reduces the peak power of the filtered signal, i.e. at the input of the nonlinear channel defined above.

It has been found, inter alia, that such reduction is to advantage of radio relay systems links, e.g. allowing the use of smaller antennas or the transmission over longer path sections.

The outstanding features of the invention are set forth in the claims while the various aspects and advantages of the invention will become more apparent from the following description (not limiting).

General solution

The basic idea of the invention is based upon the possibility (other conditions such as minimum distance between transmitted points, average transmitted power, etc. being equal) of avoiding transmission of sequences which a high peak power of the filtered signal is associated with, replacing them with more suitable ones (i.e. with a lower peak power of the filtered signal).

The possibility of carrying out this replacement is given by the increasing of the dimension of the alphabet of the transmitted points. In reception the unwanted sequences, suppressed in transmission, are reconstituted in their original form.

By reducing in this way the peak power of the filtered signal it is possible to exploit in a much more efficient manner the nonlinear characteristic of the above-defined "channel".

Fig. 1 illustrates the schematic block diagram of a generic digital transmission system (blocks I, II, IV, V, VI, VII, IX, X) in which blocks II and VIII, subject of this invention, are inserted. In particular, fig. 1 shows:

- the DATA SOURCE (ref. I) which provides the numeric sequence to be transmitted at its output;
- an ENCODER/MODULATOR block (ref. II) which receives at the input the numeric sequence to be transmitted and carries out the standard encoding operations designed for BER reduction (block, convolutional, Trellis Code Modulation, etc., type encoding) and modulation operations, providing at its

DISH
Exhibit 1003 Page 166

output one of the points of the constellation to be transmitted;

- a PRE block (ref. III), subject of the invention along with block VIII, which eliminates from the transmission the unwanted sequences in terms of peak power of the filtered signal, i.e. of the signal at the output of block IV described below;
- the transmission filter HTx (f) (ref. IV) which provides at its output the analog signal to be transmitted;
- a NONLINEAR DISTORTION block (ref. V) representing an unwanted nonlinear distortion on the signal path. It can be due to the nonlinear characteristic of the final amplifier of the transmitter (as it happens e.g. in microwave links) or, more in general, to a nonlinear behaviour of the information channel;
- the information channel proper (ref. VI) identified as "LINEAR CHANNEL", which outputs a signal constituted by the signal at its input added to and/or combined with disturbances of various kind;
- the reception filter HRx (f) (ref. VII) which receives the signal from the transmit channel and carries out a suitable filtering;
- a PRD block (ref. VIII), subject of the invention along with block III, which reconstitutes the signal in its original form containing the unwanted sequences suppressed in transmission by block III;
- a DECODER/DEMODULATOR block (ref. IX) which receives the outgoing signal from block VIII demodulates it and carries out the above-mentioned standard decoding operations, providing the user with the numeric sequence subject of the transmission;
- the USER (ref. X) which receives the numeric sequence.

In an advantageous and therefore preferred embodiment, blocks PRE (III) and PRD (VIII) in accordance with the invention are realized in the form of digital encoders. As an example, fig. 2 shows a block diagram illustrating how it is possible to realize the PRE in case of a radio relay system transmission using a quadrature amplitude modulation (QAM). Let M be the points of the two-dimensional constellation to be transmitted in the conventional case (hereinafter "standard" constellation) and MR be the redundance points necessary for the encoding (carried out in PRE) subject of the invention; the resulting constellation is composed of (M + MR) points (hereinafter "expanded" constellation).

Typically: $1 < (M + MR)/M < 1.2$.

In fig. 2 there is shown the preferred embodiment of PRE; it includes:

- A delay element T (ref. XIII) which receives as its input the last two-dimensional element of the block of N outgoing two-dimensional symbols from XII and outputs it with a delay equal to one channel symbol interval. Such output will be indicated as "state" of the machine in the following.
- A map identified as "(M + MR) MAP" (ref. XI) which receives at its input a block of N symbols of the "standard" constellation and provides (M + MR) blocks of N two-dimensional symbols of the "expanded" constellation. Each output block is relative to a particular "state" of the system and represents the best sequence to be transmitted (in the presence of that particular "state" of the machine) in terms of peak power of the filtered signal.
- A multiplexer "MUX" (ref. XII) having (M + MR) inputs and one output which, on the basis of the "state" at the output of block XIII selects (among the M + MR present at its input) the suitable block of N symbols to be provided at the output.

It remains to be defined what is the meaning of "best sequence in terms of peak power of the filtered signal". According to one particular aspect - even if not limiting - of the invention, the calculation is arranged as follows. Let hTX(t) be the impulse response of the transmission filter IV of fig. 1, T the symbol time, $d^{(k)}$ ($k = 1,2,\ldots, (M + MR)$) the "state" of the system, Ci = (ci, ci + 1, ..., cN-1) the generic block of N two-dimensional symbols, the "weight" w of block Ci = (ci, ci + 1, ..., cN-1) given the state d(k), can be defined as the quantity:

$$w(d^{(k)}, Ci) = \max_{-NT \le t < NT} \left| hTX(to-T)\, d^{(k)} + \sum_{j=0}^{N-1} hTX(to+JT)\, cj \right|^2 \qquad (1)$$

then meaning that the best sequences Ci (in terms of peak power of the filtered signal) are those having a lower "weight" $w(d^{(k)}, Ci)$.

The PRD can be realized through a circuit quite similar to the one shown in fig. 2 for PRE; its description in terms of block diagram (being within the reach of those skilled in the art, in the light of what has been set forth hereinbefore) will be omitted for conciseness' sake.

Reference has been made to specific embodiments represented in figs. 1 and 2 for simplicity and illustrative clearness reasons; therefore it is evident that these are susceptible to those variations, modifications, replacements and the like which, being within the reach of those skilled in the art, naturally

DISH
Exhibit 1003 Page 167

fall within the sphere and the spirit of the scope of the invention.
The following possible variants are here mentioned by way of an example:

- in equation (1) a "state" constituted by several two-dimensional symbols could be envisaged;
- blocks XI and XII of fig. 2 could be replaced by a combinatory algebra, thus transforming the structure of PRE into a convolutional one.
- N could be taken great enough to be able to eliminate in fig. 2 the reaction through block XIII thus transforming the structure of PRE into a "block" structure.

Claims

1. Method of transmitting and receiving numerical signals in which:
   - in transmission, data from a numeric or numerized source are modulated, the modulated signal is filtered and transmitted through a nonlinear channel (where the nonlinearity may be due to the nonlinear characteristic of the final amplifier of the transmitter, or more in general to a nonlinear behaviour of the transmit channel proper),
   - in reception the received signal is filtered and demodulated in order to reconstruct the transmitted numeric sequence

   characterized in that:
   - in transmission, the unwanted sequences in terms of peak power of the filtered signal are eliminated from the modulated signal before filtering and replaced with suitable sequences,
   - in reception, the received and filtered signal is restored in its original form (i.e. containing the unwanted sequences suppressed in transmission) and then sent to the demodulator.

2. Method according to claim 1, characterized in that:
   - the link is a digital, radio relay system link and uses a quadrature amplitude modulation (QAM),
   - the replacement of said sequences is carried out through a base-band digital encoder.

3. Method according to claim 2, characterized in that a "recurring" coding, i.e. using previously transmitted symbols for individuating the symbol to be transmitted, is used.

4. Method according to claim 3, characterized in that the individuation of the sequences to be replaced is carried out on the basis of equation (1) or of relations equivalent thereto.

5. Method substantially as hereinbefore described and represented.

6. System for implementing the method of the preceding claims, including:
   - in transmission, a data source, an encoder/modulator, a transmit filter and a nonlinear amplifier;
   - in reception, a filter and a decoder/demodulator,

   characterized in that:
   - in transmission, an encoder for reducing the peak power of the filtered signal is inserted upstream of the transmit filter,
   - in reception, a decoder for reducing the peak power of the filtered signal is inserted downstream of the receive filter.

7. System according to claim 6, characterized in that the decoder is of "recurrent" type.

8. System according to claim 7, wherein the encoder comprises at least a map and a multiplexer.

9. System according to claim 8, characterized in that the map generates the sequences to be transmitted on the basis of equation (1) or of relations equivalent thereto.

DISH
Exhibit 1003 Page 168

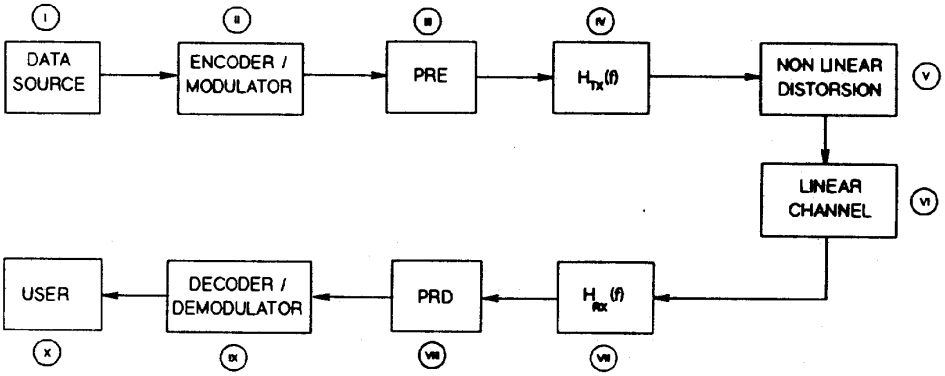

Fig. 1

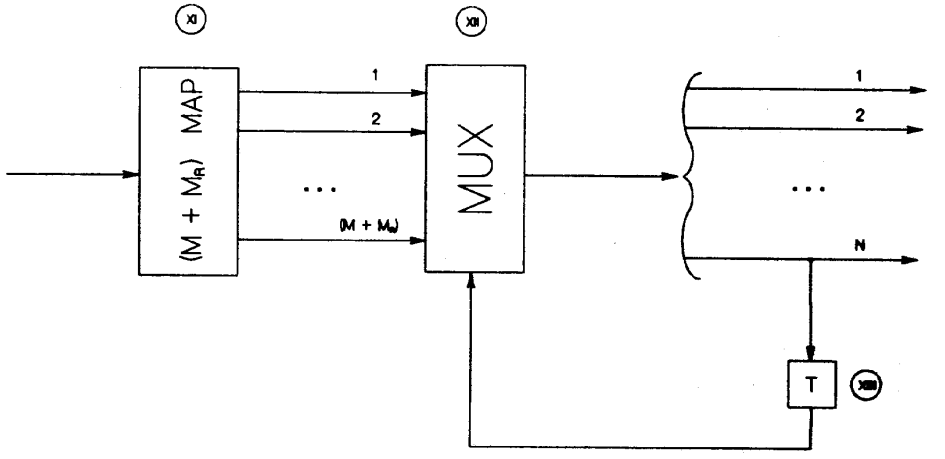

Fig. 2

DISH
Exhibit 1003 Page 169

European Patent Office

EUROPEAN SEARCH REPORT

Application Number
EP 93 11 1722

DOCUMENTS CONSIDERED TO BE RELEVANT

Category	Citation of document with indication, where appropriate, of relevant passages	Relevant to claim	CLASSIFICATION OF THE APPLICATION (Int.Cl.5)
X	EP-A-0 383 632 (CODEX) * abstract; figures 1-8,10-13 * * page 2, line 45 - page 3, line 23 * ---	1-4,6-9	H04L27/34
X	IEEE JOURNAL ON SELECTED AREAS IN COMMUNICATION vol. 7, no. 6 , August 1989 , NEW YORK US pages 941 - 958 FORNEY 'Multidimensional constellations - part II: Voronoi constellations' * abstract; figures 5-7 * * page 950, left column, paragraph 4 - right column, paragraph 3 * ---	1-4,6-9	
X	TRANSACTIONS OF THE IEICE vol. E71, no. 6 , June 1988 , TOKYO, JP pages 591 - 598 NAKAMURA ET AL. 'A new 90Mbps 68 APSK modem with honeycomb constellation for digital radio relay systems' * figures 11,12 * * page 594, right column, paragraph 3 - page 595, left column, paragraph 2 * ---	1-4,6-9	TECHNICAL FIELDS SEARCHED (Int.Cl.5) H04L
A	IEEE International Conference on Communications 1991, 23-27/6/1991, Denver, US; IEEE, New York, US, 1991; pages 1075 - 1079, Soleymani & Kang: "Trellis coding with partially overlapped signal sets" * abstract; figures 1,3,4 * * page 1075, right column, paragraph 2 * * page 1077, left column, paragraph 3 - page 1078, left column, paragraph 1 * --- -/--	1-4,6-9	

The present search report has been drawn up for all claims

Place of search	Date of completion of the search	Examiner
THE HAGUE	18 November 1993	SCRIVEN, P

CATEGORY OF CITED DOCUMENTS

X : particularly relevant if taken alone
Y : particularly relevant if combined with another document of the same category
A : technological background
O : non-written disclosure
P : intermediate document

T : theory or principle underlying the invention
E : earlier patent document, but published on, or after the filing date
D : document cited in the application
L : document cited for other reasons

& : member of the same patent family, corresponding document

EPO FORM 1503 03.82 (P04C01)

European Patent Office

EUROPEAN SEARCH REPORT

Application Number
EP 93 11 1722

DOCUMENTS CONSIDERED TO BE RELEVANT

Category	Citation of document with indication, where appropriate, of relevant passages	Relevant to claim	CLASSIFICATION OF THE APPLICATION (Int.Cl.5)
A	IEEE International Conference on Communications 1992; 14-18/6/1992, Chicago, US; IEEE,New York, US, 1992; pages 431 - 1435, Khandani & Kabal: "Using a prefix code for addressing the Voronoi constellations based on lattices Dn and D*n" * abstract; figure 3; table 6 * * page 1432, right column, paragraph 2 - page 1433, left column, paragraph 1 * * page 1433, right column, paragraph 2 - page 1434, right column, paragraph 2 * ---	1-4,6-9	
X,P	WO-A-92 17971 (BRITISH TELECOMMUNICATIONS) * abstract * -----	1-4,6-9	
			TECHNICAL FIELDS SEARCHED (Int.Cl.5)

The present search report has been drawn up for all claims

Place of search	Date of completion of the search	Examiner
THE HAGUE	18 November 1993	SCRIVEN, P

CATEGORY OF CITED DOCUMENTS

X : particularly relevant if taken alone
Y : particularly relevant if combined with another document of the same category
A : technological background
O : non-written disclosure
P : intermediate document

T : theory or principle underlying the invention
E : earlier patent document, but published on, or after the filing date
D : document cited in the application
L : document cited for other reasons

& : member of the same patent family, corresponding document

EPO FORM 1503 03.82 (P04C01)

(19) Europäisches Patentamt
European Patent Office
Office européen des brevets

(11) EP 0 719 004 A2

(12) EUROPEAN PATENT APPLICATION

(43) Date of publication:
26.06.1996 Bulletin 1996/26

(51) Int. Cl.[6]: **H04L 5/06**

(21) Application number: **95119990.0**

(22) Date of filing: **18.12.1995**

(84) Designated Contracting States:
DE FR GB NL SE

(30) Priority: **20.12.1994 JP 316900/94**
20.03.1995 JP 60732/95

(71) Applicant: **MATSUSHITA ELECTRIC INDUSTRIAL CO., LTD.**
Kadoma-shi, Osaka-fu, 571 (JP)

(72) Inventors:
- **Hayashino, Hiroshi**
  Hyogo-ken, (JP)
- **Harada, Yasuo**
  Hyogo-ken, (JP)
- **Kimura, Tomohiro**
  Kawachinagano-shi, Osaka-fu (JP)
- **Uno, Yasuhiro**
  Osaka-fu, (JP)
- **Oue, Hiroshi**
  Osaka-fu (JP)

(74) Representative: **Altenburg, Udo, Dipl.-Phys. et al**
Patent- und Rechtsanwälte
Bardehle . Pagenberg . Dost . Altenburg . Frohwitter . Geissler & Partner,
Postfach 86 06 20
81633 München (DE)

(54) OFDM system with additional protection against multipath effects

(57) A complex multiplier complex-multiplies a carrier modulation signal group for deciding the phases and amplitudes of a plurality of carriers which are orthogonal to each other on the frequency axis by a complex signal group having a predetermined specific pattern which varies in phase at random. An inverse Fourier transformer performs inverse Fourier transformation on an output of the complex multiplier, for transforming a digital signal which is multiplexed on the frequency axis to an OFDM signal on the time axis. A guard interval insertion part adds front and rear guard intervals to front and rear parts of each symbol of the OFDM signal respectively. The front and rear guard intervals include data which are identical to those of rear and front end parts of the corresponding symbol respectively. Arithmetic processing which is reverse to that on a transmission side is performed on a receiving side, whereby distortion of received data is removed. Thus, the OFDM signal can be transmitted with no waveform distortion on a data component of each symbol on the frequency axis after Fourier transformation even if a reflected wave is superposed on a direct wave due to a multipath.

FIG. 1

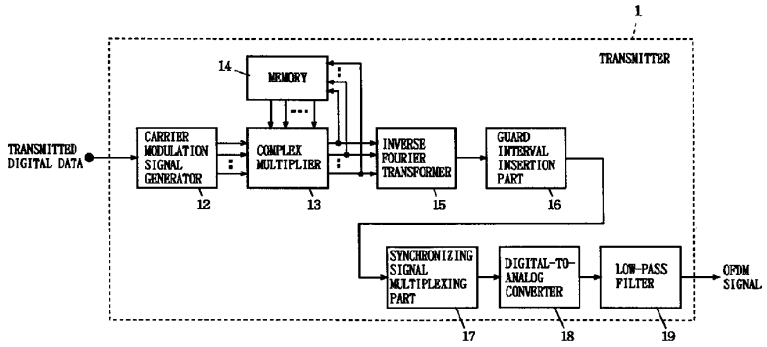

EP 0 719 004 A2

Printed by Rank Xerox (UK) Business Services
2.12.4/3.4

DISH
Exhibit 1003 Page 172

Description

BACKGROUND OF THE INVENTION

Field of the Invention

The present invention relates to an orthogonal frequency division multiplexing (hereinafter referred to as OFDM) transmission method, and more specifically, it relates to a method of transmitting data between a transmission side and a receiving side through a wire or wireless transmission path with an orthogonal frequency division multiplex signal including symbols of prescribed lengths and guard intervals of prescribed lengths which are arranged between the symbols.

Description of the Background Art

As well known in the art, an OFDM transmission system is adapted to divide coded data and sort the same into at least hundreds of carriers, for multiplexing and transmitting the data. In relation to digital sound broadcasting for movable terminals or terrestrial digital television broadcasting, communication through an OFDM signal is recently watched with interest. The OFDM signal can transmit a large quantity of data at a high speed while its characteristics are hardly deteriorated by reflected waves even if no waveform equalizer is provided. Further, this signal hardly causes a crossfire to another service since its signal waveform is close to that of a random noise.

A transmission system employing such an OFDM signal is disclosed in "Suitable for Mobile Receiving of OFDM Digital Broadcasting Employing at least Hundreds of Carriers" by Hajime Fukuchi of the Communications Research Laboratory, the Ministry of Posts and Telecommunications of Japan, "Data Compression and Digital Modulation", Nikkei Electronics Books, issued on October 1, 1993, pp. 207 to 222.

Fig. 13 is a block circuit diagram showing the structure of a conventional transmitter 5 for an OFDM signal which is disclosed in the aforementioned literature, and Fig. 14 illustrates the structure of an OFDM signal which is transmitted from the transmitter 5 shown in Fig. 13. Referring to Fig. 13, the transmitter 5 comprises a serial-to-parallel converter 52, an inverse Fourier transformer 53, a parallel-to-serial converter 54, a digital-to-analog converter 55, and a low-pass filter 56. Referring to Fig. 14, (a), (b) and (c) show direct, reflected and composite waves of the OFDM signal respectively, and (d) shows a time window W.

The serial-to-parallel converter 52 of the transmitter 5 is supplied with an input symbol train. The input symbol train is formed by digitally modulated transmission data, and each transmission symbol includes a plurality of data values. The digital modulation is performed by QPSK (quadriphase phase shift keying) modulation or 16 QAM (quadrature amplitude modulation). The serial-to-parallel converter 52 serial-to-parallel converts the input symbol train in every symbol, to obtain a plurality of symbol trains of a lower speed. The degree of parallelism is identical to the number (such as 512, for example, in the range of tens to thousands) of a plurality of carriers, which are orthogonal in phase to each other, employed in the inverse Fourier transformer 53. Due to this operation, the serial-to-parallel converter 52 outputs a group of carrier modulation signals for deciding the amplitudes and phases of the plurality of carriers which are employed in the inverse Fourier transformer 53.

The inverse Fourier transformer 53 allots the carrier modulation signals to the respective carriers which are lined up on the frequency axis in every symbol so that data for one symbol is transformed to a multiplex signal on the frequency axis, and collectively performs inverse Fourier transformation on the signals, thereby transforming the same to a multiplex signal (parallel digital signal in this stage) on the time axis.

The parallel-to-serial converter 54 parallel-to-serial converts the multiplex signal on the time axis, thereby forming a OFDM signal. The digital-to-analog converter 55 converts the OFDM signal to an analog OFDM baseband signal. The low-pass filter 56 limits the band of the OFDM baseband signal, so that no channel-to-channel interference is caused by aliasing.

Following the aforementioned series of operations, the transmitter 5 outputs the OFDM signal including guard intervals Gm and symbols Sm to the transmission path, as shown in Fig. 14. A demodulator (not shown) carries out signal processing which is reverse to that of the modulator 5 on the OFDM signal received through the transmission path, to reproduce an output symbol train which is identical to the input symbol train.

The so-called multipath is caused on the transmission path. Therefore, the receiver receives direct waves of the OFDM signal transmitted from the transmitter and reflected waves which are time-delayed from the direct waves in superposition. If a reflected wave (see (b) in Fig. 14) by the multipath is superposed on a direct wave (see (a) in Fig. 14) in the symbol Sm, for example, an interference part am with the guard interval Gm of the reflected wave is caused on a front end part of the symbol Sm of a composite wave (see (c) in Fig. 14), while an interference part βm with a symbol Sm-1 of the reflected wave is caused on a front end part of the guard interval Gm. At this time, the interference part βm which is displaced from the time window W exerts no influence on Fourier transformation of the symbol Sm. However, the interference part αm is caused in the time window W while the data component of the guard interval Gm is "0", and hence waveform distortion is disadvantageously caused on the data component of each symbol Sm on the frequency axis after the Fourier transformation.

On the other hand, a time delay is caused in the OFDM signal before the same reaches the receiver from the transmitter, due to delay characteristics of the transmission path, deviation in sampling timing resulting from mismatching between clocks of the digital-to-analog converter on the transmission side and an analog-to-dig-

DISH
Exhibit 1003 Page 173

ital converter on the receiving side, and the like. In the receiver, therefore, the time window W must disadvantageously be adjusted on the time axis.

The carrier modulation signals which are outputted from the serial-to-parallel converter 52 may not be out of phase with each other, but may be completely in phase with each other. For example, the carrier modulation signals are completely in phase with each other when a silent state is transmitted in excess of one symbol period in digital sound broadcasting or when a monochromatic picture is transmitted in excess of one symbol period in terrestrial digital television broadcasting. Also in the case of transmitting a sounding state or a multicolor picture, the carrier modulation signals tend to be completely in phase with each other in a digital modulation system such as the QPSK modulation or the 16 QAM, due to a limited number of signal points which are out of phase with each other.

When the carrier modulation signals are completely in phase with each other as described above and these signals are subjected to inverse Fourier transformation, nodes of the respective carriers match with each other on the time axis and addition/increase parts are concentrated to one portion on the time axis, and hence the OFDM signal has an impulsive signal waveform on the time axis, to cause power concentration. Figs. 15(a) to 15(d) show this situation.

Referring to Fig. 15(a), a group of n carrier modulation signals for modulating n carriers which are orthogonal to each other respectively are completely in phase with each other on a complex plane. Referring to Fig. 15(b), the n carriers which are modulated by the n carrier modulation signals shown in Fig. 15(a) are multiplexed on the time axis. When the carrier modulation signals are thus completely in phase with each other, the OFDM signal becomes an impulsive waveform signal. Referring to Fig. 15(c), on the other hand, a group of n carrier modulation signals for modulating n carriers which are orthogonal to each other respectively are at random in phase on a complex plane. Referring to Fig. 15(d), the n carriers which are modulated by the n carrier modulation signals shown in Fig. 15(c) are multiplexed on the time axis. When the carrier modulation signals are thus completely out of phase from each other, the OFDM signal is enenly diffused on the time axis, and becomes a random waveform signal.

As hereinabove described, the OFDM signal has an impulsive waveform to extremely increase the maximum power when the carrier modulation signals are completely in phase with each other, and hence the OFDM signal is disadvantageously readily influenced by nonlinearity of the transmitter, the receiver, a relay amplifier such as a satellite or a CATV included in the transmission path and the like. In this case, the dynamic ranges of the transmitter, the receiver, the relay amplifier and the like may be increased to exert no influences of nonlinearity on the impulsive OFDM signal, while the cost for the transmitter, the receiver, the relay amplifier and the like is disadvantageously increased in this case.

SUMMARY OF THE INVENTION

Accordingly, an object of the present invention is to provide a method of transmitting an OFDM signal which causes no waveform distortion in a data component of each symbol on the frequency axis after Fourier transformation even if a reflected wave is superposed on a direct wave through a multipath, and a transmitter and a receiver therefor.

Another object of the present invention is to provide a method of transmitting an OFDM signal which can readily adjust a time window on the time axis even if a time delay is caused in the OFDM signal before the same reaches a receiving side from a transmission side, and a transmitter and a receiver therefor.

Still another object of the present invention is to provide a method of transmitting an OFDM signal which can reduce an influence of nonlinearity on the OFDM signal in a low-priced structure, and a transmitter and a receiver therefor.

A first aspect of the present invention is directed to a method of transmitting an orthogonal frequency division multiplex signal in every symbol of a prescribed length from a transmission side to a receiving side through a wire or wireless transmission path, and the method comprises:

a first step of transforming a carrier modulation signal group deciding the phases and amplitudes of a plurality of carriers which are orthogonal to each other on the frequency axis to the orthogonal frequency division multiplex signal on the time axis by performing inverse Fourier transformation in every symbol; and

a second step of adding front and rear guard intervals, including data which are identical to those of rear and front end parts of each symbol of the orthogonal frequency division multiplex signal, to front and rear parts of the symbol respectively and transmitting the same to the receiving side.

According to the first aspect of the present invention, as hereinabove described, the front and rear guard intervals including the data which are identical to those of parts of each symbol are added to the front and rear parts of the symbol in transmission of each symbol of the OFDM signal, whereby all data components in a single symbol interval which are lined up on the time axis can be reproduced on the receiving side even if a time window in the Fourier transformation is slightly displaced from the symbol interval of the received signal. Therefore, it is not necessary to correctly coincide the time window with the symbol interval even if a time delay is caused in the OFDM signal before the same reaches the receiving side from the transmission side, whereby the time window can be readily adjusted on the time axis. Even if a symbol interval of a direct wave is superposed with a guard interval of a reflected wave due to a multipath, further, amplitude/phase distortion of each data component appearing on the frequency axis after the Fourier transformation on the receiving side is homogeneous in every symbol. Therefore, such waveform dis-

DISH
Exhibit 1003 Page 174

tortion can be readily removed from data components on the frequency axis of one symbol interval on the receiving side by simple arithmetic processing such as multiplication or addition.

In a preferred embodiment of the aforementioned first aspect, the carrier modulation signal group is complex-multiplied by a reference complex signal group on the frequency axis, so that the complex multiplication result is transformed to an OFDM signal and transmitted to the receiving side. On the receiving side, on the other hand, the OFDM signal which is transmitted from the transmission side is transformed to a receiving carrier modulation signal group so that this receiving carrier modulation signal group is complex-divided by the reference complex signal group on the frequency axis. Even if a time delay is caused in the OFDM signal between the transmission side and the receiving side, therefore, modulated data can be obtained on the receiving side with no influence by the time delay.

As to the reference complex signal group for complex-multiplying the carrier modulation signal group, a result of complex multiplication which is carried out in advance of a constant symbol may be employed with respect to each symbol of the carrier modulation signal group.

Alternatively, the reference complex signal group may be prepared from a complex signal group having a predetermined specific pattern with signals which vary in phase at random. In this case, a complex multiplication result which is obtained in a third step is ordinarily transformed to an OFDM signal, while the reference complex signal group is periodically transformed to an OFDM signal. Thus, the absolute reference phases of the respective signals of the carrier modulation signal group are random values, whereby the OFDM signal obtained by the inverse Fourier transformation can be suppressed from time concentration of power. Thus, it is not necessary to increase the dynamic ranges of the transmitter, the receiver and the transmission path but influences exerted by nonlinearity of the transmitter, the receiver and a relay amplifier on the OFDM signal can be reduced through a low-priced structure.

A second aspect of the present invention is directed to a transmitter for an orthogonal frequency division multiplex signal, which is an apparatus for transmitting the orthogonal frequency division multiplex signal to a receiving side in every symbol of a prescribed length through a wire or wireless transmission path, and the transmitter comprises:

a memory part storing a reference complex signal group;

a complex multiplication part, complex-multiplying a carrier modulation signal group deciding the phases and amplitudes of a plurality of carriers which are orthogonal to each other on the frequency axis, by the reference complex signal group stored in the memory part on the frequency axis, for outputting a transmission carrier modulation signal group;

an inverse Fourier transformation part performing an inverse Fourier operation on the transmission carrier modulation signal group which is outputted from the complex multiplication part in every symbol thereby transforming the transmission carrier modulation signal group to the orthogonal frequency division multiplex signal on the time axis;

a guard interval addition part adding front and rear guard intervals, including data which are identical to those of rear and front end parts of each symbol of the orthogonal frequency division multiplex signal outputted from the inverse Fourier transformation part, to front and rear parts of the symbol respectively; and

a transmission part transmitting the orthogonal frequency division multiplex signal having the added front and rear guard intervals to the receiving side in every symbol.

In a preferred embodiment of the aforementioned second aspect, the memory part stores a complex multiplication result of the complex multiplication part which is precedent to a constant symbol as the reference complex signal group.

In another preferred embodiment of the aforementioned second aspect, the memory part stores a predetermined complex signal group as the reference complex signal group. On the other hand, the complex multiplication part complex-multiplies the carrier modulation signal group by the reference complex signal group which is stored in the memory part on the frequency axis and outputs the result. Further, the inverse Fourier transformation part ordinarily transforms the complex multiplication result which is outputted from the complex multiplication part to an orthogonal frequency division multiplex signal in every symbol, and periodically transforms the reference complex signal group which is outputted from the memory part to an orthogonal frequency division multiplex signal.

According to the aforementioned second aspect, the memory part may hold an output of a pseudo-noise signal generation part generating a pseudo-noise signal or that of a frequency sweep signal generation part generating a frequency sweep signal as the reference complex signal group.

A third aspect of the present invention is directed to a receiver for an orthogonal frequency division multiplex signal, which is an apparatus for receiving the orthogonal frequency division multiplex signal transmitted from a transmission side in every symbol of a prescribed length through a wire or wireless transmission path, and the receiver comprises:

a Fourier transformation part performing a Fourier transformation operation on the orthogonal frequency division multiplex signal on the time axis in every symbol thereby transforming the orthogonal frequency division multiplex signal to a receiving carrier modulation signal group on the frequency axis;

a memory part storing the receiving carrier modulation signal group which is outputted from the Fourier transformation part in every symbol as a receiving reference complex signal group; and

DISH
Exhibit 1003 Page 175

a complex division part complex-dividing the receiving carrier modulation signal group which is outputted from the Fourier transformation part by the receiving reference complex signal group which is stored in the memory part on the frequency axis.

A fourth aspect of the present invention is directed to a method of transmitting an orthogonal frequency division multiplex signal from a transmission side to a receiving side in every symbol of a prescribed length through a wire or wireless transmission path, and the method comprises:

a first step of forming a carrier modulation signal group for deciding the phases and amplitudes of a plurality of carriers which are orthogonal to each other on the frequency axis in every symbol;

a second step of generating a complex signal group having a predetermined specific pattern with signals varying in phase at random;

a third step of complex-multiplying the carrier modulation signal group by the complex signal group on the frequency axis in every symbol, thereby randomizing phases of respective signals of the carrier modulation signal group; and

a fourth step of ordinarily transforming the carrier modulation signal group having the signals which are randomized in phase in the third step to an orthogonal frequency division multiplex signal on the time axis by inverse Fourier transformation in every symbol, and periodically transforming the complex signal group to an orthogonal frequency division multiplex signal by inverse Fourier transformation, for transmitting the same to the receiving side respectively.

The foregoing and other objects, features, aspects and advantages of the present invention will become more apparent from the following detailed description of the present invention when taken in conjunction with the accompanying drawings.

BRIEF DESCRIPTION OF THE DRAWINGS

Fig. 1 is a block diagram showing the structure of a transmitter 1 according to a first embodiment of the present invention;

Fig. 2 is a block diagram showing the structure of a receiver 2 according to the first embodiment of the presentinvention;

Fig. 3 illustrates the structure of an OFDM signal which is transmitted from the transmitter 1 shown in Fig. 1;

Fig. 4 illustrates operations of a memory 14 and a complex multiplier 13 shown in Fig. 1;

Fig. 5 illustrates operations of an envelope wave detector 23 and a synchronous reproducer 24 of the receiver 2 with respect to the OFDM signal which is outputted from the transmitter 1 shown in Fig. 1;

Fig. 6 illustrates operations of a memory 26 and a complex divider 27 shown in Fig. 2;

Fig. 7 illustrates comparative results of a simulation for comparing a conventional system and the system according to the first embodiment with each other in relation to influences exerted by delayed waves by multipaths;

Fig. 8 illustrates results of a simulation for comparing the conventional system and the system according to the first embodiment with each other in relation to influences exerted by time delays through transmission paths etc.;

Fig. 9 is a block diagram showing the structure of a transmitter according to a second embodiment of the present invention;

Fig. 10 illustrates the situation of a complex multiplication of a carrier modulation signal group by a complex signal group in a complex multiplier 13 shown in Fig. 9;

Fig. 11 illustrates operations of a memory 14 and the complex multiplier 13 shown in Fig. 9;

Fig. 12 is a signal structural diagram showing the structure of an OFDM signal which is transmitted from the transmitter shown in Fig. 9;

Fig. 13 is a block diagram showing the structure of a conventional transmitter 5 for an OFDM signal;

Fig. 14 illustrates the structure of the OFDM signal which is transmitted from the transmitter 5 shown in Fig. 13; and

Figs. 15(a) to 15(d) are signal waveform diagrams showing the relations between phase states of carrier modulation signal groups allotted to carriers which are orthogonal to each other and OFDM signals respectively.

DESCRIPTION OF THE PREFERRED EMBODIMENTS

With reference to the drawings, description is now made on embodiments of a method of transmitting an OFDM signal, and a transmitter and a receiver employed therefor according to the present invention.

Fig. 1 is a block diagram showing a transmitter 1 according to a first embodiment of the present invention, Fig. 2 is a block diagram showing the structure of a receiver 2 according to the first embodiment of the present invention, and Fig. 3 illustrates an exemplary structure of an OFDM signal which is employed in the present invention. Referring to Fig. 3, (a) and (b) show direct and reflected waves of the OFDM signal respectively and (c) and (d) show direct and reflected waves of the OFDM signal causing time delays respectively, while (e) shows a time window W.

The transmitter 1 shown in Fig. 1 and the receiver 2 shown in Fig. 2 are connected with each other through a transmission path (not shown) such as a coaxial cable or an optical fiber cable. The transmitter 1 and the receiver 2 are employed in a digital CATV system, for example. The transmitter 1 is adapted to transmit picture data for multiple channels of a television, for example, to the receiver 2 through an OFDM signal.

Referring to Fig. 1, the transmitter 1 comprises a carrier modulation signal generator 12, a complex multiplier

DISH
Exhibit 1003 Page 176

13, a memory 14, an inverse Fourier transformer 15, a guard interval insertion part 16, a synchronizing signal multiplexing part 17, a digital-to-analog converter 18, and a low-pass filter 19.

The carrier modulation signal generator 12 of the transmitter 1 receives transmitted digital data (bit stream signal) to be transmitted to the receiver 2. The carrier modulation signal generator 12 digital-modulates the inputted transmitted digital data and serial-to-parallel converts the same in every symbol interval, thereby converting the data to a carrier modulation signal group including n (512, for example, in the range of tens to thousands) carrier modulation signals for modulating n carriers which are orthogonal to each other. The digital modulation is performed by QPSK modulation or 16 QAM. The carrier modulation signal group in this stage is similar to that outputted from the serial-to-parallel converter 52 (see Fig. 13) of the conventional transmitter. The carrier modulation signal group which is outputted from the carrier modulation signal generator 12 is supplied to the complex multiplier 13. The memory 14 can store such a carrier modulation signal group D'm outputted from the complex multiplier 13 for one symbol. When a carrier modulation signal group Dm is inputted in the complex multiplier 13, the memory 14 outputs a carrier modulation signal group D'm-1, which is precedent to one symbol, stored therein to the complex multiplier 13 as a prescribed reference complex signal group. The complex multiplier 13 complex-multiplies the inputted transmission signal group Dm by the reference complex signal group D'm-1 which is precedent by one symbol on the frequency axis, thereby forming the following carrier modulation signal group:

$$D'm\ (D'm = Dm \times D'm\text{-}1)$$

Assuming that Dm[k]real represents the real number part of a k-th (k = 1, 2, ..., n) carrier modulation signal of the carrier modulation signal group, including n carrier modulation signals, which is inputted in the complex multiplier 13 and Dm[k]imag represents the imaginary number part thereof while D'm-1[k]real represents the real number part of the k-th carrier modulation signal which is stored in the memory 14 and D'm-1[k]imag represents the imaginary number part thereof, the complex multiplier 13 carries out multiplication processing as to the real and imaginary number parts of each carrier modulation signal, for outputting:

$$D'm[k]real = Dm[k]real \times D'm\text{-}1[k]real$$

$$D'm[k]imag = Dm[k]imag \times D'm\text{-}1[k]imag$$

The memory 14 stores the carrier modulation signal D'm (including D'm[k]real and D'm[k]imag) of the real and imaginary numbers outputted from the complex multiplier 13. As shown in Fig. 4, the memory 14 and the complex multiplier 13 repeatedly execute the aforementioned operations.

The inverse Fourier transformer 15 successively allots the respective carrier modulation signals included in the carrier modulation signal group D'm which is outputted from the complex multiplier 13 to the respective carriers which are lined up on the frequency axis in every symbol interval, collectively performs inverse Fourier transformation thereon, and further performs parallel-to-serial conversion, thereby transforming the carrier modulation signal group multiplexed with the respective data components on the frequency axis to an OFDM signal D'mt multiplexed with the respective data components on the time axis.

The guard interval insertion part 16 temporarily stores the digital OFDM signal D'mt which is outputted from the inverse Fourier transformer 15 in its internal buffer in every symbol interval. Then, the guard interval insertion circuit 16 adds front and rear guard intervals Ghm and Gem to front and rear parts of each symbol Sm (see Fig. 3). Time lengths tg1 and tg2 of the front and rear guard intervals Ghm and Gem are prescribed in consideration of time difference between direct and indirect waves due to a multipath caused in the transmission path and time delays resulting from sampling deviation between the digital-to-analog converter 18 of the transmitter 1 and an analog-to-digital converter 22 of the receiver 2. Further, the front and rear guard intervals Ghm and Gem include data D'emt and D'hmt which are identical to those of rear and front end parts Sem and Shm of the corresponding symbol Sm respectively. Thus, the substantial symbol length is extended to tg1 + ts + tg2 . The guard interval insertion part 16 successively outputs the data D'emt, D'm and D'hmt through the front guard interval Ghm, the symbol Sm and the rear guard interval Gem.

The synchronizing signal multiplexing part 17 multiplexes a synchronizing signal on the OFDM signal to which the guard intervals are added on the time axis in every symbol in order to indicate the breakpoint of the symbol, and outputs the signal to the digital-to-analog converter 18. The synchronizing signal is formed by a periodically known nonmodulated carrier, a suppression signal etc. with respect to the OFDM signal, as shown at (a) in Fig. 5, for example.

The digital-to-analog converter 18 converts the OFDM signal of the digital data, to which the guard intervals and the synchronizing signal are added, outputted from the synchronizing signal multiplexing part 17 to an analog OFDM baseband signal. The low-pass filter 19 limits the band of the OFDM baseband signal, so that no channel-to-channel interference is caused by aliasing.

As the result of the aforementioned series of operations, the transmitter 1 outputs the OFDM signal including the guard intervals and the synchronizing signal to the transmission path.

Referring to Fig. 2, the receiver 2 comprises a low-pass filter 21, the analog-to-digital converter 22, an envelope detector 23, a synchronous reproducing part 24, a Fourier transformer 25, a memory 26, a complex divider 27, and a transmission data reproducer 28.

DISH
Exhibit 1003 Page 177

The low-pass filter 21 removes unnecessary spectral components of a high-frequency region from the OFDM signal which is received through the transmission path.

In consideration of a time delay Δt caused by the multipath or the delay characteristics of the transmission path, the OFDM signal which is received in the receiver 2 is represented by ZD'mt, where Z represents the signal delay as follows:

$$Z = \exp j2\pi fc\Delta t$$

The analog-to-digital converter 22 converts data ZD'emt, ZD'mt and ZD'hmt which are included in the front guard interval Ghm, the symbol Sm and the rear guard interval Gem of the analog OFDM signal respectively to those of a digital OFDM signal.

The envelope detector 23 envelope-detects the OFDM signal, thereby outputting an envelope detection signal shown at (b) in Fig. 5 in every symbol. The synchronous reproducing part 24 outputs a reference timing signal shown at (c) in Fig. 5 in every symbol on the basis of the envelope detection signal outputted from the envelope detector 23. This reference timing signal is inputted in the Fourier transformer 25 and the memory 26.

The Fourier transformer 25 observes the OFDM signal which is outputted from the analog-to-digital converter 22 in synchronization with the reference timing signal through the time window W (see (e) in Fig. 3) of the same length as the symbol length ts, thereby extracting only necessary data parts of the respective symbols. The Fourier transformer 25 further performs Fourier transformation operations on the extracted data parts, thereby transforming the OFDM signal on the time axis to a receiving carrier modulation signal group on the frequency axis.

The memory 26 stores the receiving carrier modulation signal group which is outputted from the Fourier transformer 25 for one symbol. When the transmitter 1 transmits data D'm, the memory 26 stores data ZD'm as corresponding data. The data ZD'm is obtained by adding a time delay Z caused by the multipath or the transmission path to the data D'm, as follows:

$$ZD'm = D'm \times \exp j2\pi fc\Delta t$$

The memory 26 outputs the data ZD'm to the complex divider 27 in synchronization with the reference timing signal. The complex divider 27 establishes synchronization, and then complex-divides data ZD'm+1 of a symbol Sm+1 which is outputted from the Fourier transformer 25 by the data ZD'm held in the memory 26. Namely, the complex divider 27 performs the following operation:

$$ZD'm+1/ZD'm = D'm+1/D'm = Dm+1$$

As shown in Fig. 6, the Fourier transformer 25, the memory 26 and the complex divider 27 repeatedly execute the aforementioned operations.

As hereinabove described, a relative time delay is caused between the direct and reflected waves shown at (a) and (b) in Fig. 3, due to the multipath. Further, specific time delays are caused in the direct and reflected waves, due to the difference in sampling timing between the digital-to-analog converter 18 of the transmitter 1 and the analog-to-digital converter 22 of the receiver 2 (see (c) and (d) in Fig. 3). These time delays are not taken into consideration in the Fourier transformer 25 as to the reference timing signal, and hence positions of the receiving side time window W on the time axis are displaced from the symbol intervals of the received signal, as shown at (e) in Fig. 3.

Even if the time window W is displaced from correct symbol intervals in the Fourier transformer 25 of the receiving side, however, the data observed through the time window W include all data ZD'mt on the time axis which must be originally included in one symbol interval since the front and rear guard intervals Ghm and Gem include the data ZD'emt and ZD'hmt respectively. Therefore, the time delays and superposition of the reflected waves appear as uniform amplitude/phase distortion in every data component on the frequency axis. When the time delays and the characteristics of the reflected waves are uniform, the values of the amplitude/phase distortion in the respective symbol intervals are equal to each other. According to this embodiment, the complex divider 27 complex-divides the data ZD'm+1 of the symbol Sm+1 which is outputted from the Fourier transformer 25 by the data ZD'm held in the memory 26, thereby canceling the data delay Z and obtaining the original carrier modulation signal group Dm+1 with no delay. Namely, the amplitude/phase distortion is canceled by the following operation of the complex divider 27:

$$ZD'm+1/ZD'm = D'm+1/D'm = Dm+1$$

Thus, data Dm having no phase/amplitude distortion can be obtained as to each symbol.

According to this embodiment, as hereinabove described, the guard intervals including the data which are identical to those of the front and rear end parts of each symbol are added to the front and rear parts of the symbol respectively for transmitting the data, whereby all data components in one symbol interval which are lined up on the time axis can be reproduced on the receiving side as to both of the direct and reflected waves in the time window W. Therefore, the respective data components appearing on the frequency axis after the Fourier transformation are uniform in amplitude/phase distortion even if the reflected waves are superposed on the direct waves by the multipath to result in superposition of the symbol intervals of the direct waves and the guard intervals of the reflected waves. Therefore, waveform distortion can be readily removed from the receiving carrier modulation signal group on the frequency axis of one symbol interval by executing proper operations (multiplication and division) on the transmission and receiving sides.

DISH
Exhibit 1003 Page 178

According to this embodiment, further, demodulated data can be obtained with no time delay even if a time delay is caused in the OFDM signal between the transmission and receiving sides, by complex-multiplying and complex-dividing the receiving carrier modulation signal group by the prescribed reference complex signal group on the frequency axis. Consequently, it is not necessary to correctly coincide the time window with the symbol interval.

The transmission data reproducer 28 demaps signal points of the receiving carrier modulation signal group Dm which is outputted from the complex divider 27 on a complex plane and decides the signal points, thereby obtaining a receiving digital signal group which is identical in value to the transmission digital signal group of the transmitter 1. As hereinabove described, phase distortion and amplitude distortion are removed from the receiving carrier modulation signal group Dm. Therefore, the transmission data reproducer 28 can correctly and readily determine the original data from the mapping positions on the complex plane.

The inventors have made simulations of comparing the system according to this embodiment with the conventional system with respect to influences exerted by waves delayed by multipaths and those exerted by time axis delays respectively through a calculator. Each simulation was executed on such conditions that the carrier number was 512, only data of a 256-th carrier had an amplitude "1" and a phase "0", and all data of the remaining carriers were "0".

Fig. 7 illustrates the results of the simulation for comparing the system according to this embodiment with the conventional system as to the influences exerted by waves delayed by multipaths. Referring to Fig. 7, (a), (b), (c) and (d) show data distortion states in the case of transforming direct, indirect, composite and composite waves in the conventional system to signals on the frequency axis by Fourier operations respectively. On the other hand, (e), (f), (g) and (h) show data distortion states in the case of converting direct, indirect, composite and composite waves in the system according to this embodiment to signals on the frequency axis by Fourier operations respectively.

In the conventional system, no data is inserted in any guard interval (see $\alpha 1$ at (b) in Fig. 7), and hence an interference part $\alpha 2$ appears in a time window W of the composite wave (see (c) in Fig. 7). When the composite wave is transformed to a signal on the frequency axis by a Fourier operation in the time window W, therefore, the spectrum of the data of the 256-th carrier is spread and the data of the remaining carriers, which must have originally been "0", are distorted. Thus, the transmission data reproducer 28 readily causes an erroneous determination. Further, the transmission data reproducer 28 also readily causes erroneous determinations as to other carriers. In the system according to this embodiment, on the other hand, data are inserted in the guard intervals and hence no influences are exerted on the data of the remaining carriers.

Fig. 8 illustrates the results of the simulation for comparing the system according to this embodiment with the conventional system as to the influences exerted by time delays caused by transmission paths etc. Referring to Fig. 8, (a) shows a spectrum obtained under such conditions that only the data of the 256-th carrier had an amplitude "1" and a phase "0", and (b) shows a signal waveform in the case of transforming the data at (a) to a signal on the time axis by an inverse Fourier operation. Referring to Fig. 8, further, (c) and (d) show data distortion states in the case of transforming composite and composite waves causing time delays in the conventional system to signals on the frequency axis by Fourier operations respectively. On the other hand, (e) and (f) show data distortion states in the case of transforming composite and composite waves causing time delays in the system according to this embodiment to signals on the frequency axis by Fourier operations respectively.

In the conventional system, no data is inserted in any guard interval (see $\alpha 1$ at (c) in Fig. 8), and hence an interference part $\alpha 2$ appears in a time window W of the composite wave, similarly to the case shown at (c) in Fig. 7. When the composite wave is transformed to a signal on the frequency axis by a Fourier operation in the time window W, therefore, the spectrum of the data of the 256-th carrier is spread and the data of the remaining carriers, which must have originally been "0", are distorted, as shown at (d) in Fig. 8. Thus, the transmission data reproducer 28 readily causes erroneous determinations also as to other carriers. In the system according to this embodiment, on the other hand, data are inserted in the guard intervals and hence no influences are exerted on the data of the remaining carriers.

Fig. 9 is a block diagram showing the structure of a transmitter 3 according to a second embodiment of the present invention. In the transmitter 3 shown in Fig. 9, portions corresponding to those of the transmitter 1 shown in Fig. 1 are denoted by the same reference numerals, to omit redundant description. As to the embodiment shown in Fig. 9, it is to be noted that a memory 14 holds an output of a specific pattern generator 31, i.e., a complex signal group D0 having a predetermined specific pattern with signals which mutually vary in phase at random. Such a complex signal group D0 can be formed by a pseudo-noise signal generator comprising a PN series pseudo-random signal generator for generating a pseudo-random signal which is at a level between zero and 1 and a multiplier for multiplying the pseudo-random signal by 2π for generating a unit vector signal in a phase having a random value in the range of zero to 2π and an amplitude of 1, for example. Alternatively, the complex signal group D0 can be formed by a frequency sweep signal generator for generating a known frequency sweep signal in a phase having a random value in the range of zero to 2π.

A complex multiplier 13 complex-multiplies data Dm of each symbol interval by data D0 on the frequency axis every time data Dm is inputted for forming data D'm (D'm = Dm x D0), thereby randomizing mutual phases

DISH
Exhibit 1003 Page 179

of respective carrier modulation signals included in a carrier modulation signal group to specific patterns.

Fig. 10 illustrates a complex multiplication operation in the complex multiplier 13. In particular, (a) in Fig. 10 shows arrangement of signal points which can be taken by the carrier modulation signals when 16 QAM is employed as a modulation system, (b) shows a unit vector i whose phase varies at random, and (c) shows a carrier modulation signal whose phase is randomized to a specific pattern.

Referring to (a) in Fig. 10, it is assumed that a carrier modulation signal included in a carrier modulation signal group which is allotted to one carrier is arranged at a signal point A on a complex plane. The signal A has a real number part of 3 and an imaginary number part of 1. It is also assumed that the unit vector i has a phase angle of $3\pi/4$ at this time. A carrier modulation signal A' shown at (c) in Fig. 10 is obtained as the result of a complex multiplication. The carrier modulation signal A' has a real number part of - 2.8 and an imaginary number part of 1.4, and takes a signal point which is not present in the arrangement of the 16 QAM. Thus, the phase of the unit vector i varies at random, and hence the complex multiplier 13 outputs a carrier modulation signal group having signals whose phases are mutually randomized to an inverse Fourier transformer 15 even if respective carrier modulation signals included in a carrier modulation signal group which is outputted from a carrier modulation signal generator 12 are in phase with each other.

The complex multiplier 13 repeats such an operation for a prescribed period. Further, the complex multiplier 13 periodically outputs only the data D0. Fig. 11 shows a series of such operations. Assuming that S0 represents a symbol in which the data D0 is inserted, the transmitter 3 periodically outputs the data D0 of the symbol S0 while outputting data Dm of a symbol Sm in other case, as shown in Fig. 12. The inverse Fourier transformer 15 allots the carrier modulation signal group D'm to respective carriers which are lined up on the frequency axis in every symbol, and collectively performs inverse Fourier transformation and parallel-to-serial conversion thereon, thereby converting the same to a digital OFDM signal. Consequently, absolute reference phases of the carrier modulation signal group are at random values in the range of zero to 2π whereby the OFDM signal outputted from the inverse Fourier transformer 15 can be suppressed from power concentration. Thus, it is not necessary to increase the dynamic ranges of the transmitter 3 and a receiver but influences exerted on the OFDM signal by nonlinearity of the transmitter, the receiver, a relay amplifier etc. can be reduced through a low-priced structure. The remaining circuit blocks in the transmitter 3, i.e., those from a guard interval insertion part 16 to a low-pass filter 19, operate similarly to those in the transmitter 1.

The guard interval insertion part 16 inserts a data component D0 which is identical to that of a rear end part of the symbol S0 in a corresponding front guard interval, while inserting a data component which is identical to that of a front end part of the symbol S0 in a corresponding rear guard interval, similarly to the case of the symbol Sm.

When the transmitter 3 shown in Fig. 9 is employed, a receiver of the same structure as the receiver 2 shown in Fig. 2 can basically be employed. In this case, however, a memory 26 of the receiver stores receiving data ZD0 of a reference complex signal group D0 which is stored in the memory 14 of the transmitter 3.

Also in the embodiment shown in Fig. 9, an effect similar to that of the aforementioned first embodiment can be attained. Namely, amplitude/phase distortion of a receiving carrier modulation signal group appearing on the frequency axis after Fourier transformation is entirely uniform even if reflected waves are superposed on direct waves by a multipath and symbol intervals of the direct waves are superposed with guard intervals of the reflected waves, and can be removed by simple operations (multiplication and division). Further, demodulated data can be obtained with no influence by a time delay even if such a time delay is caused in the OFDM signal between the transmission and receiving sides, whereby a time window can be readily adjusted on the time axis.

While the data are transmitted through wire transmission paths in the aforementioned embodiments, the present invention is not restricted to this but data may alternatively be transmitted through a wireless transmission path. While television picture data for multichannels are carried on the respective carriers in the aforementioned embodiments, picture data for one channel may alternatively be time-shared and sequenced in a parallel manner, to be allotted to respective carriers. Further, voice data, text data or the like may be carried on the respective carriers, in place of the picture data. In addition, the present invention may alternatively be carried out in another system such as LAN or WAN, in place of the CATV.

While the reference complex signal group outputted from the memory 14 is periodically inputted in the inverse Fourier transformer 15 through the complex multiplier 13 in the transmitter 3 shown in Fig. 9, the reference complex signal group may alternatively be directly inputted in the inverse Fourier transformer 15.

While the transmitter 3 shown in Fig. 9 employs the complex signal group D0 including signals having a predetermined specific pattern and phases which mutually vary at random as the reference complex signal group to be included in the carrier modulation signal group, further, the reference complex signal group to be included in the carrier modulation signal group may alternatively be formed by a complex signal group including signals having a predetermined specific pattern which are in phase with each other under a situation causing no power concentration in the OFDM signal. Also in this case, amplitude/phase distortion can be removed by simple operations (multiplication and division), similarly to the first embodiment.

Although the present invention has been described and illustrated in detail, it is clearly understood that the

DISH
Exhibit 1003 Page 180

same is by way of illustration and example only and is not to be taken by way of limitation, the spirit and scope of the present invention being limited only by the terms of the appended claims.

Claims

1. A method of transmitting an orthogonal frequency division multiplex signal from a transmission side to a receiving side in every symbol of a prescribed length through a wire or wireless transmission path, said method comprising:

   a first step of transforming a carrier modulation signal group deciding the phases and amplitudes of a plurality of carriers being orthogonal to each other on the frequency axis to said orthogonal frequency division multiplex signal on the time axis by performing inverse Fourier transformation in every symbol; and

   a second step of adding front and rear guard intervals, including data being identical to those of rear and front end parts of each symbol of said orthogonal frequency division multiplex signal, to front and rear parts of said symbol respectively and transmitting the same to said receiving side.

2. The method of transmitting an orthogonal frequency division multiplex signal in accordance with claim 1, further comprising a third step of complex-multiplying said carrier modulation signal group by a reference complex signal group on the frequency axis,

   said first step being adapted to transform a complex multiplication result being obtained in said third step to said orthogonal frequency division multiplex signal.

3. The method of transmitting an orthogonal frequency division multiplex signal in accordance with claim 2, wherein said third step is adapted to complex-multiply each said carrier modulation group by a result of complex multiplication, being carried out in advance of a constant symbol, serving as said reference complex signal group with respect to each said symbol of said carrier modulation signal group.

4. The method of transmitting an orthogonal frequency division multiplex signal in accordance with claim 2, further comprising a fourth step of generating a complex signal group having a predetermined specific pattern with signals varying in phase at random,

   said third step employs said complex signal group being obtained in said fourth step as said reference complex signal group with respect to each said symbol of said carrier modulation signal group, and

   said first step ordinarily transforms said complex multiplication result being obtained in said third step to said orthogonal frequency division multiplex signal, while periodically transforming said reference complex signal group to said orthogonal frequency division multiplex signal.

5. The method of transmitting an orthogonal frequency division multiplex signal in accordance with claim 2, further comprising:

   a fifth step of transforming said orthogonal frequency division multiplex signal being transmitted from said transmission side to a receiving carrier modulation signal group corresponding to said carrier modulation signal group in every symbol of said prescribed length, and

   a sixth step of complex-dividing said receiving signal group being obtained in said fifth step by a prescribed reference complex signal group on the frequency axis.

6. A transmitter for an orthogonal frequency division multiplex signal, being an apparatus for transmitting said orthogonal frequency division multiplex signal to a receiving side in every symbol of a prescribed length through a wire or wireless transmission path, said transmitter comprising:

   memory means storing a reference complex signal group;

   complex multiplication means complex-multiplying a carrier modulation signal group deciding the phases and amplitudes of a plurality of carriers being orthogonal to each other on the frequency axis by said reference complex signal group being stored in said memory means on the frequency axis, for outputting a transmission carrier modulation signal group;

   inverse Fourier transformation means performing an inverse Fourier operation on said transmission carrier modulation signal group being outputted from said complex multiplication means in every symbol thereby transforming said transmission carrier modulation signal group to said orthogonal frequency division multiplex signal on the time axis;

   guard interval addition means adding front and rear guard intervals, including data being identical to those of rear and front end parts of each symbol of said orthogonal frequency division multiplex signal outputted from said inverse Fourier transformation means, to front and rear parts of said symbol respectively; and

   transmission means transmitting said orthogonal frequency division multiplex signal having added said front and rear guard intervals to said receiving side in every symbol.

7. The transmitter for an orthogonal frequency division multiplex signal in accordance with claim 6, wherein said memory means stores a complex multiplication result of said complex multiplication means in advance of a constant symbol as said reference complex signal group.

DISH
Exhibit 1003 Page 181

8. The transmitter for an orthogonal frequency division multiplex signal in accordance with claim 6, wherein said memory means stores a predetermined complex signal group as said reference complex signal group,

said complex multiplication means complex-multiplies said carrier modulation signal group by said reference complex signal group being stored in said memory means on the frequency axis for outputting the same, and

said inverse Fourier transformation means ordinarily transforms a complex multiplication result being outputted from said complex multiplication means to said orthogonal frequency division multiplex signal in every symbol, while periodically transforming said reference complex signal group being outputted from said memory means to said orthogonal frequency division multiplex signal.

9. The transmitter for an orthogonal frequency division multiplex signal in accordance with claim 8, wherein said memory means holds an output of pseudo-noise signal generation means generating a pseudo-noise signal as said reference complex signal group.

10. The transmitter for an orthogonal frequency division multiplex signal in accordance with claim 8, wherein said memory means holds an output of frequency sweep signal generation means generating a frequency sweep signal as said reference complex signal group.

11. A receiver for an orthogonal frequency division multiplex signal, being an apparatus for receiving said orthogonal frequency division multiplex signal being transmitted from a transmission side in every symbol of a prescribed length through a wire or wireless transmission path, said receiver comprising:

Fourier transformation means performing a Fourier transformation operation on said orthogonal frequency division multiplex signal on the time axis in every symbol, thereby transforming said orthogonal frequency division multiplex signal to a receiving carrier modulation signal group on the frequency axis;

memory means storing said receiving carrier modulation signal group being outputted from said Fourier transformation means every constant symbol as a receiving reference complex signal group; and

complex division means complex-dividing said receiving carrier modulation signal group being outputted from said Fourier transformation means by said receiving reference complex signal group being stored in said memory means on the frequency axis.

12. A method of transmitting an orthogonal frequency division multiplex signal from a transmission side to a receiving side in every symbol of a prescribed length through a wire or wireless transmission path, said method comprising:

a first step of forming a carrier modulation signal group for deciding the phases and amplitudes of a plurality of carriers being orthogonal to each other in every symbol on the frequency axis;

a second step of generating a complex signal group having a predetermined specific pattern with signals varying in phase at random;

a third step of complex-multiplying said carrier modulation signal group by said complex signal group in every symbol on the frequency axis, thereby randomizing the phases of respective signals of said carrier modulation signal group; and

a fourth step of ordinarily transforming said carrier modulation signal group having said signals being randomized in phase in said third step to said orthogonal frequency division multiplex signal on the time axis by performing inverse Fourier transformation in every symbol while periodically transforming said complex signal group to said orthogonal frequency division multiplex signal by inverse Fourier transformation, for transmitting the same to said receiving side respectively.

DISH
Exhibit 1003 Page 182

FIG. 1

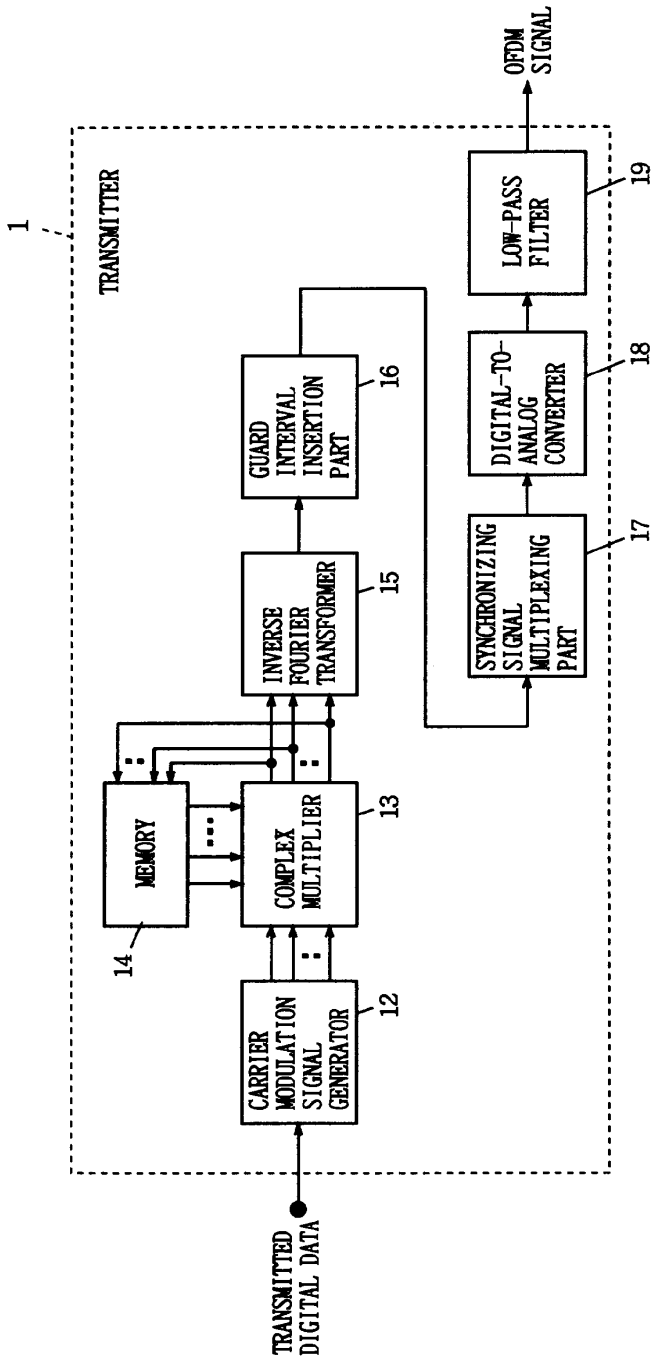

DISH
Exhibit 1003 Page 183

FIG. 2

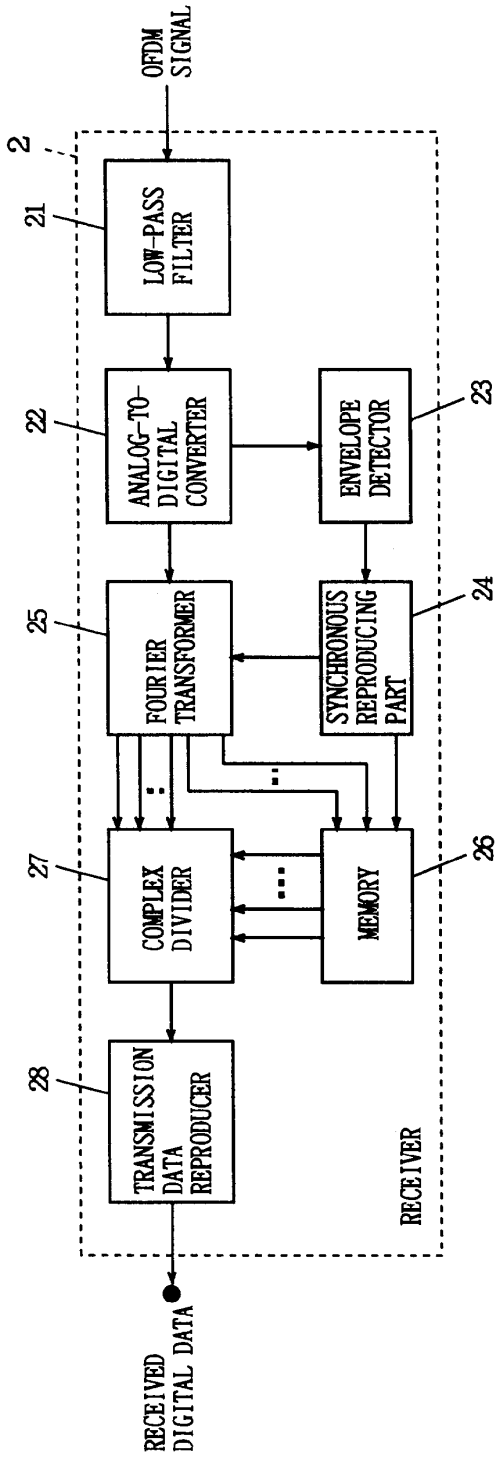

DISH
Exhibit 1003 Page 184

FIG. 3

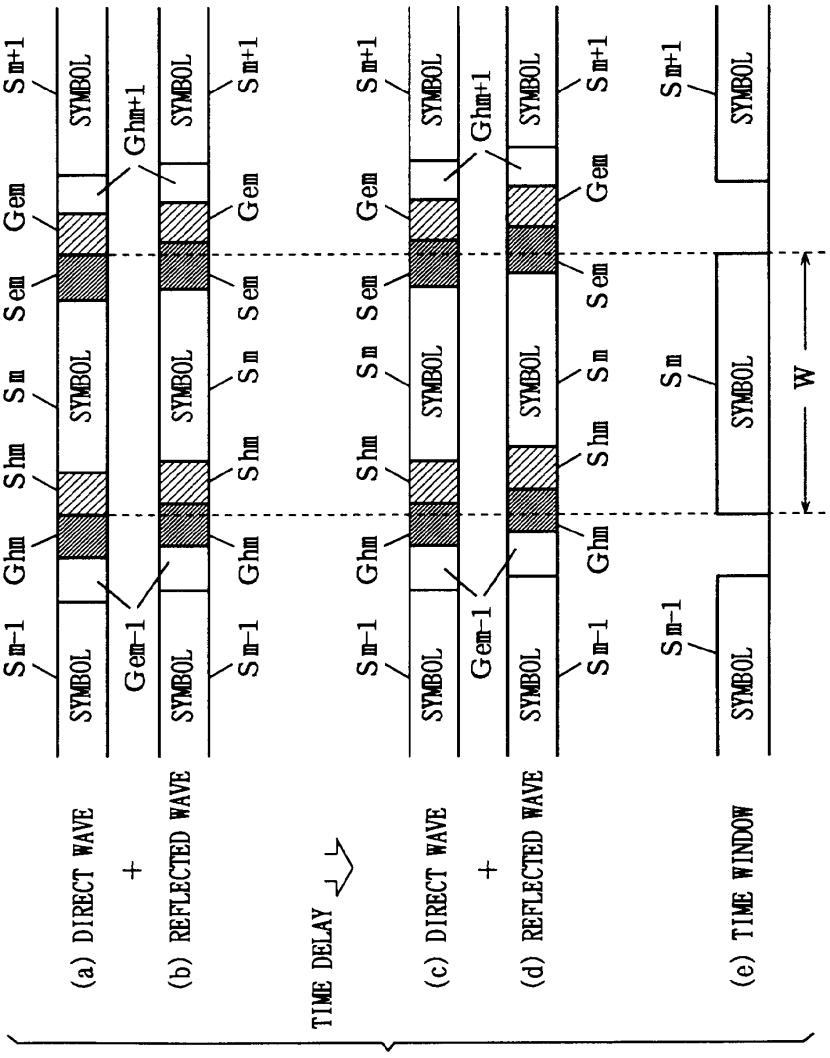

DISH
Exhibit 1003 Page 185

FIG. 4

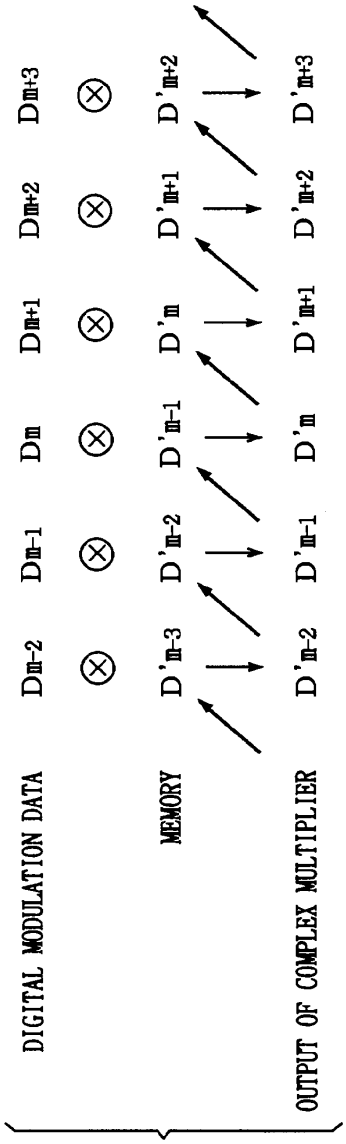

DISH
Exhibit 1003 Page 186

FIG. 5

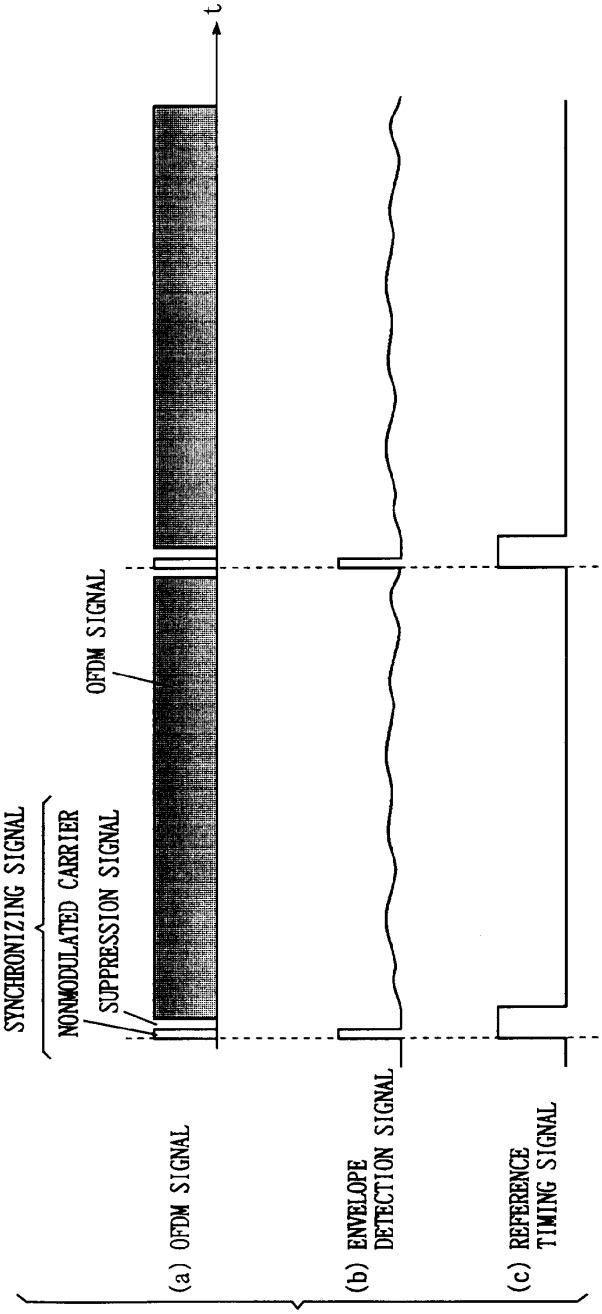

DISH
Exhibit 1003 Page 187

FIG. 6

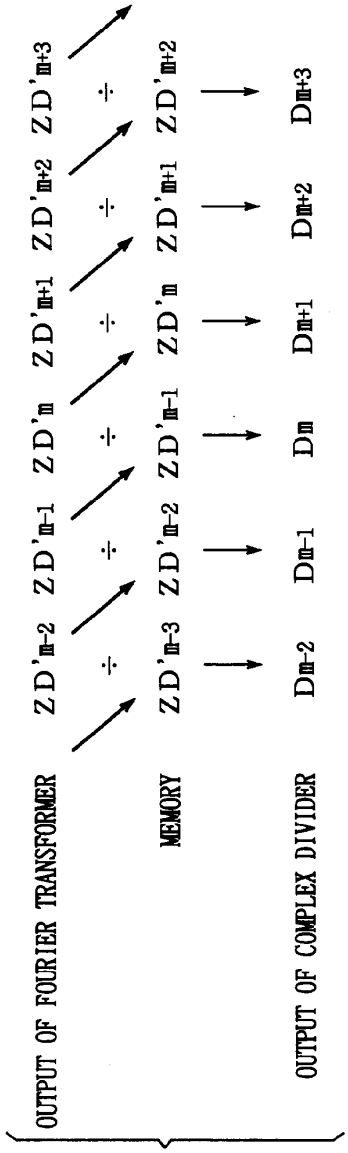

DISH
Exhibit 1003 Page 188

FIG. 7

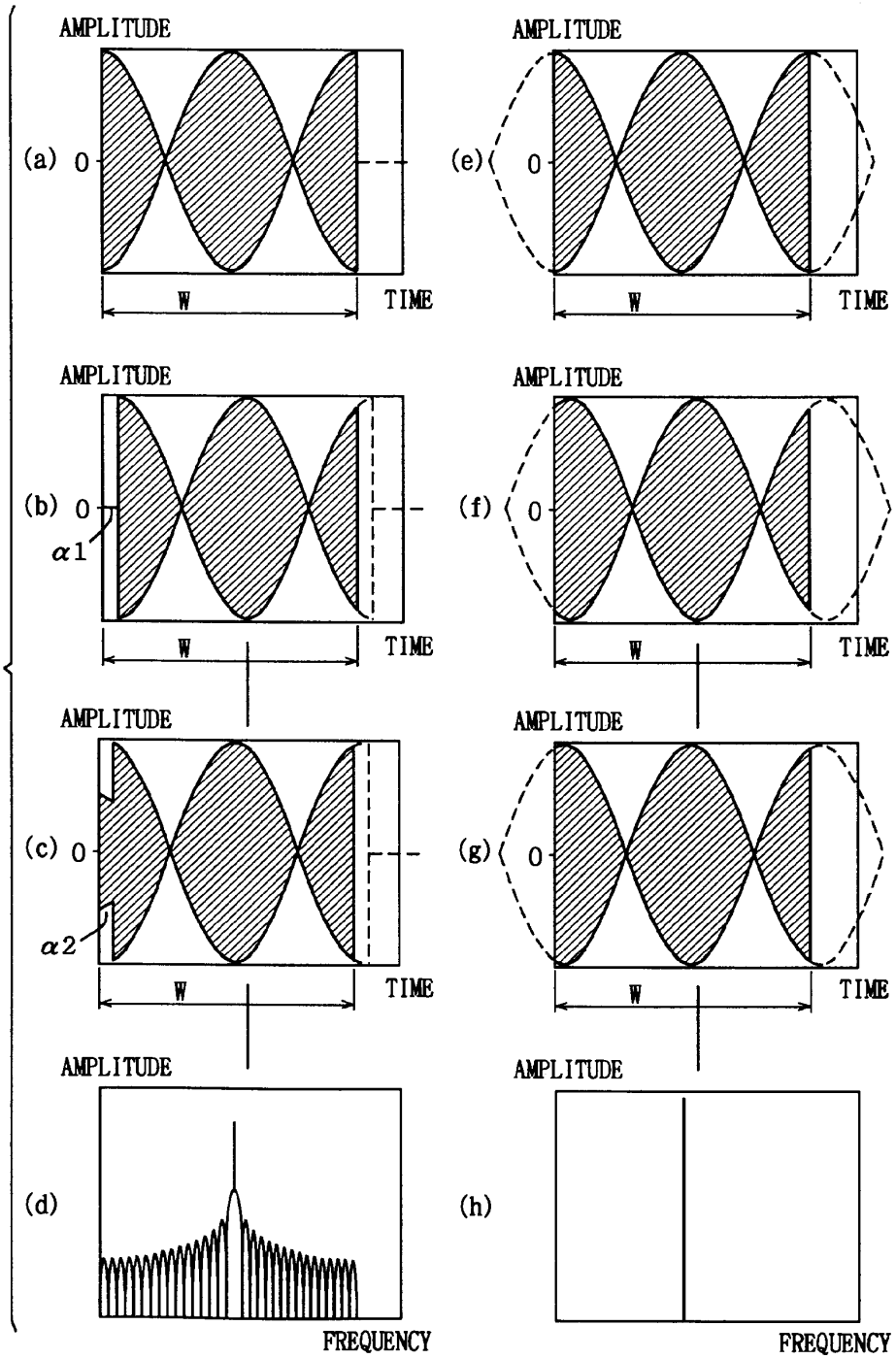

DISH
Exhibit 1003 Page 189

FIG. 8

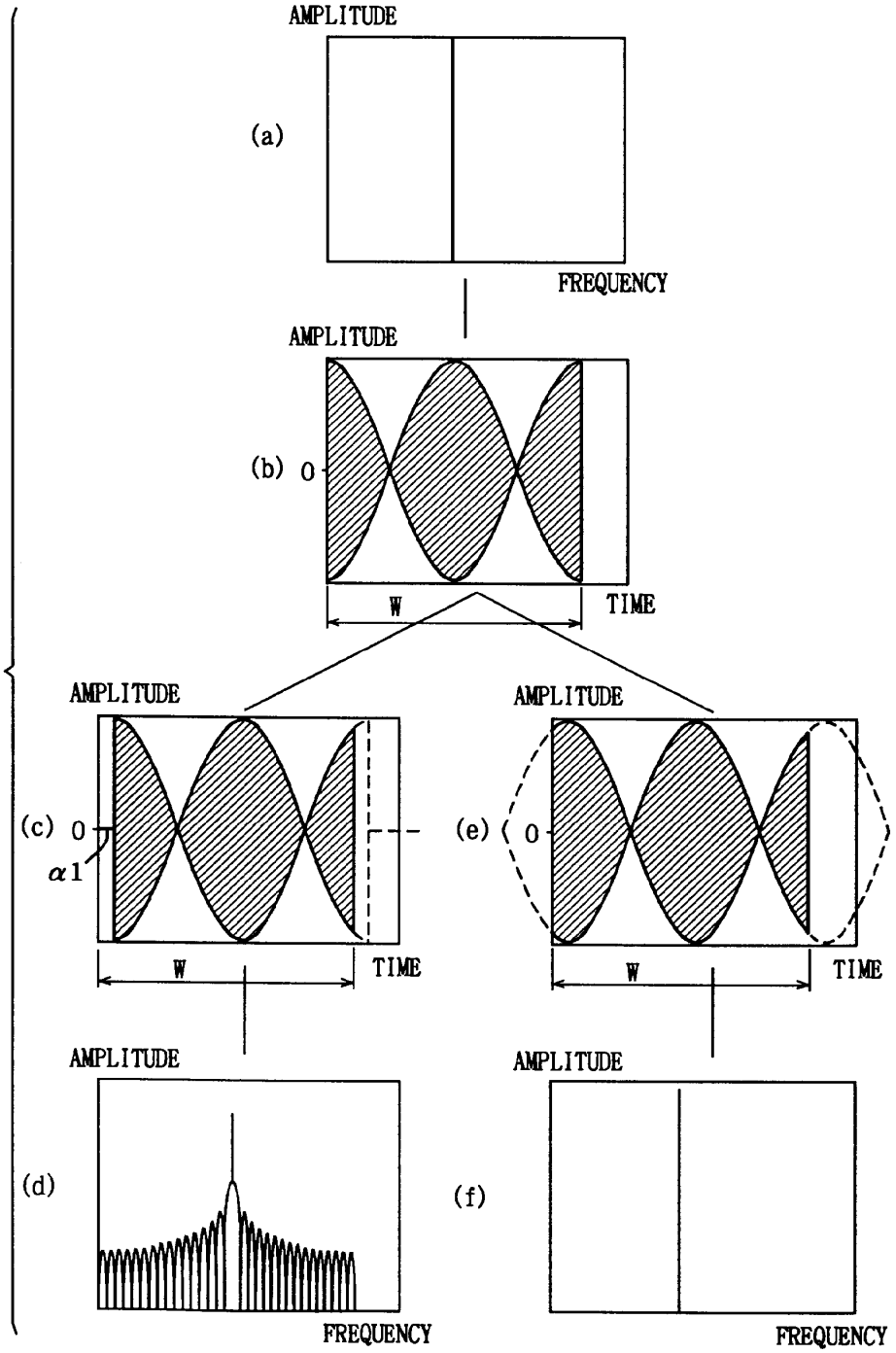

DISH
Exhibit 1003 Page 190

FIG. 9

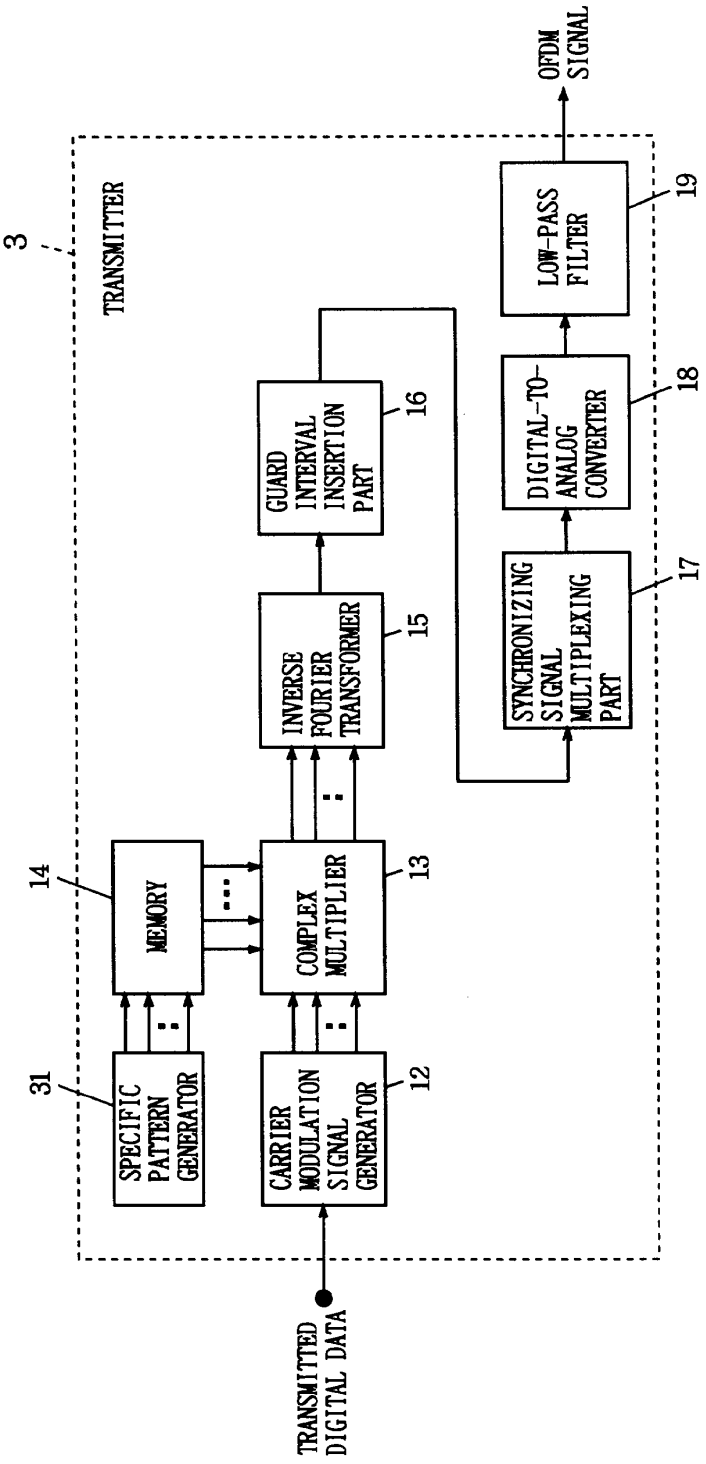

DISH
Exhibit 1003 Page 191

FIG. 10

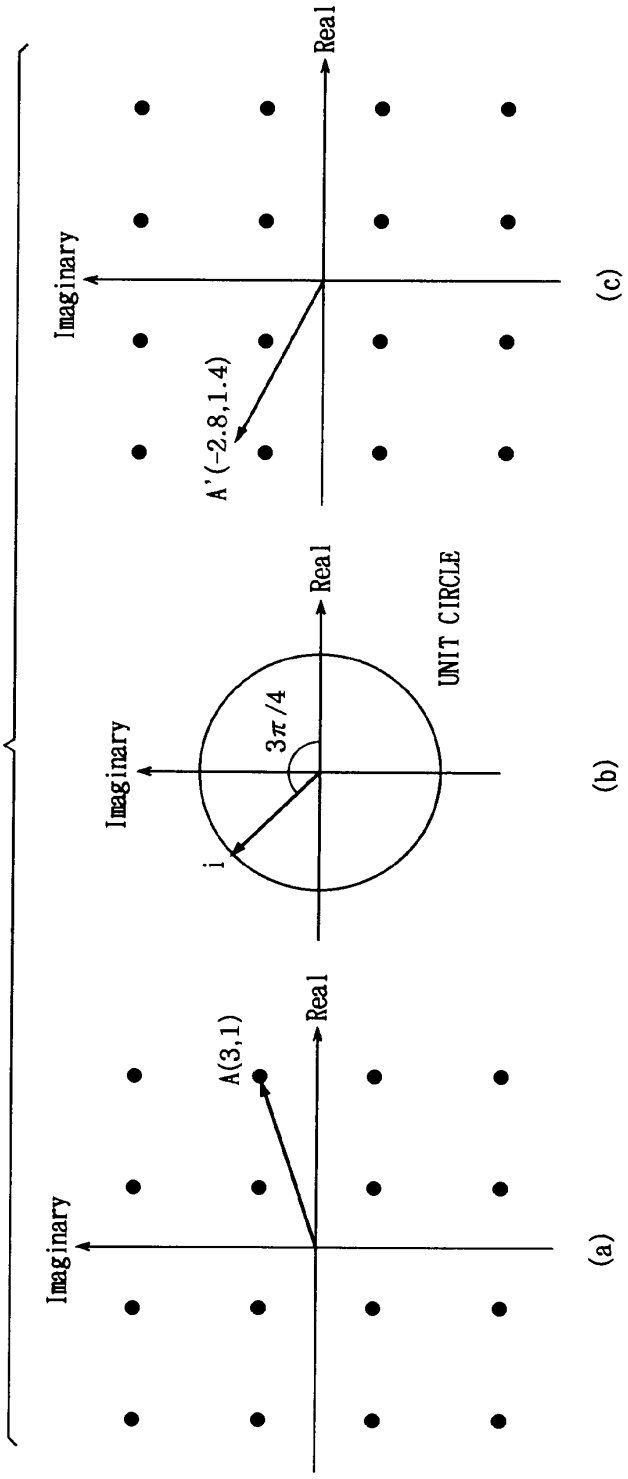

DISH
Exhibit 1003 Page 192

FIG. 11

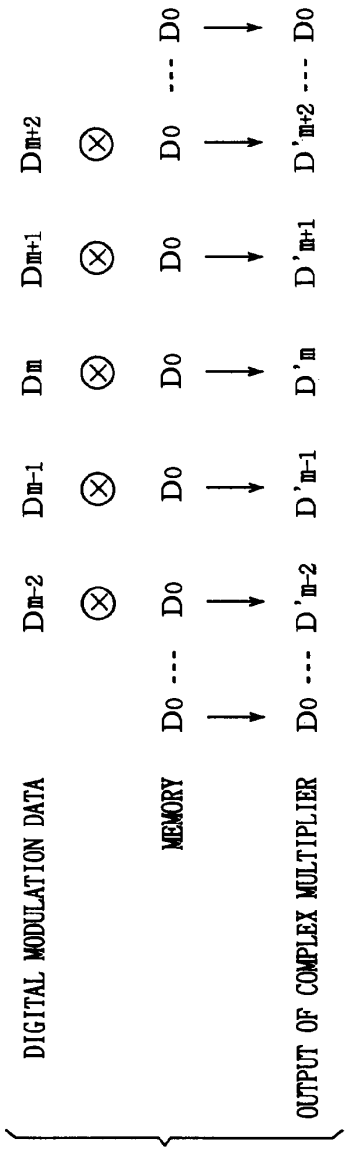

DISH
Exhibit 1003 Page 193

FIG. 12

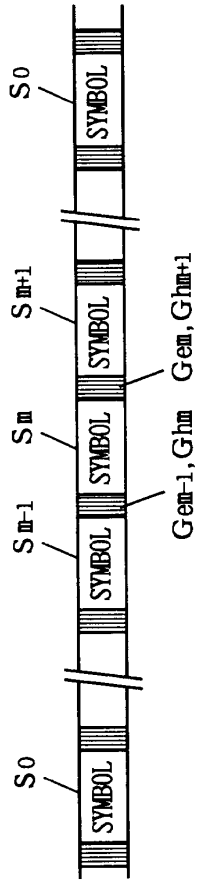

DISH
Exhibit 1003 Page 194

FIG. 13

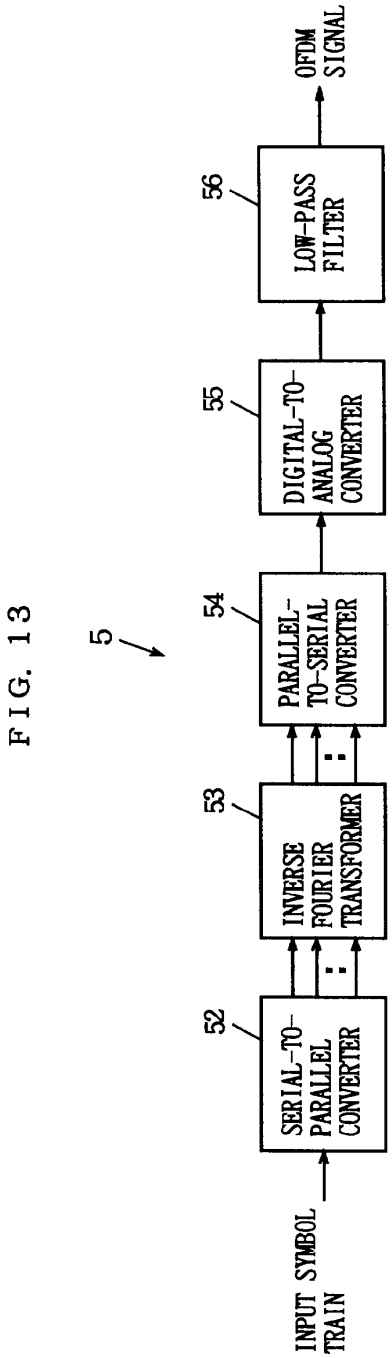

DISH
Exhibit 1003 Page 195

FIG. 14

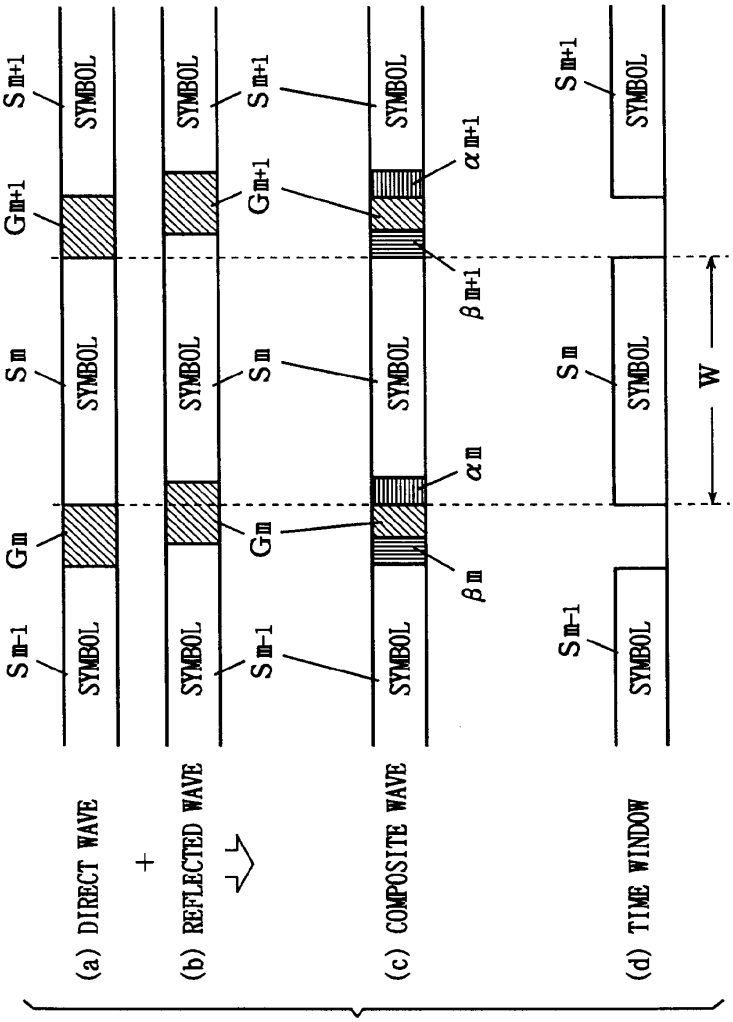

DISH
Exhibit 1003 Page 196

FIG. 15

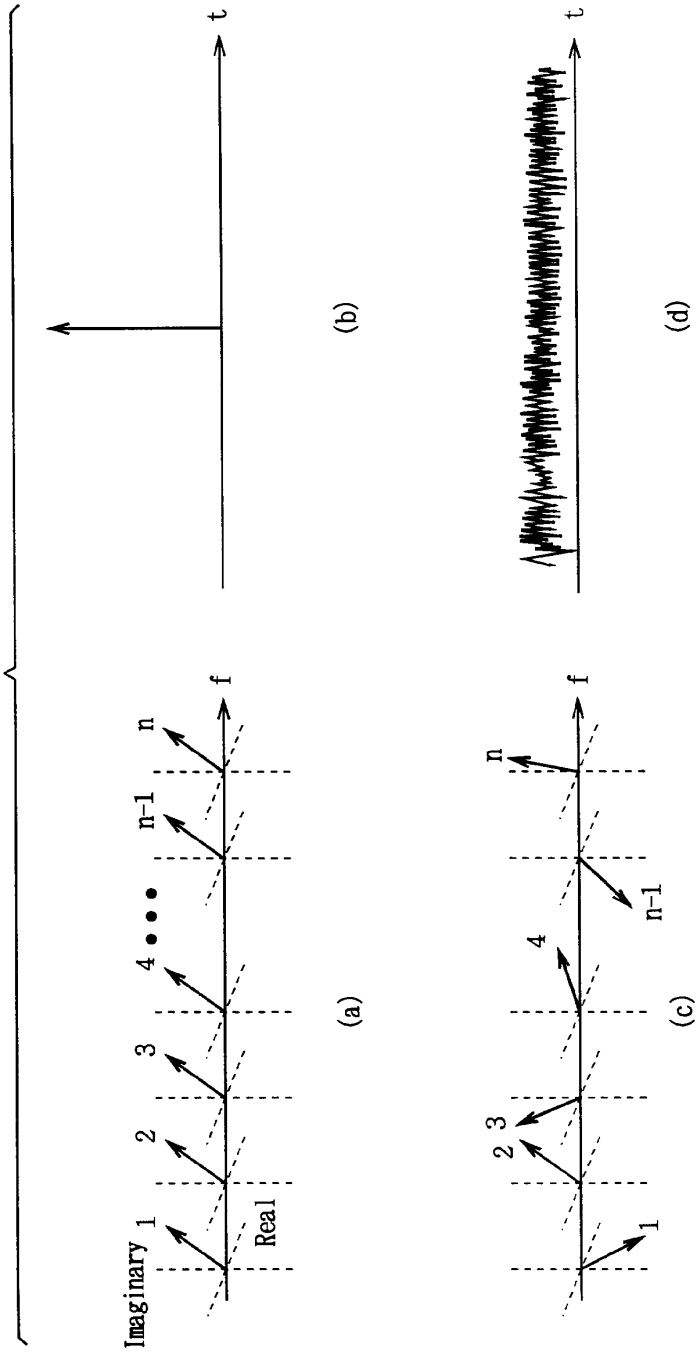

DISH
Exhibit 1003 Page 197

(12) UK Patent Application (19) GB (11) 2 330 491 (13) A

(43) Date of A Publication 21.04.1999

(21) Application No 9721862.2

(22) Date of Filing 15.10.1997

(71) Applicant(s)
British Broadcasting Corporation
(Incorporated in the United Kingdom)
Broadcasting House, LONDON, W1A 1AA,
United Kingdom

(72) Inventor(s)
Stephen Thomas Baily
Richard Harold Evans

(74) Agent and/or Address for Service
Reddie & Grose
16 Theobalds Road, LONDON, WC1X 8PL,
United Kingdom

(51) INT CL^6
H04J 3/06 , H04L 27/26

(52) UK CL (Edition Q)
H4M MTQX1

(56) Documents Cited
GB 2313527 A **EP 0683576 A1** **WO 94/08405 A1**
US 4574379 A

(58) Field of Search
UK CL (Edition P) **H4M MTQA1 MTQA2 MTQA3**
MTQX1 MTQX2 MTQX3 , H4P PAL PAPS PSB
INT CL^6 **H04B 7/212 , H04J 3/06 , H04L 7/04 27/26**

(54) Abstract Title
Digital broadcast systems

(57) A multi-carrier signal has a regular frame structure and symbol rate and is comprised of contributions from a plurality of different transmitters (2). The contributions from each transmitter are transmitted to a central transmitter (4) in pre-assigned time slots. The received contributions are then re-transmitted as a single signal over a pretermined area of coverage with a dummy symbol inserted at the start of each contribution in the frame for use as a phase reference for demodulating succeeding symbols in that contribution.

FIG.1

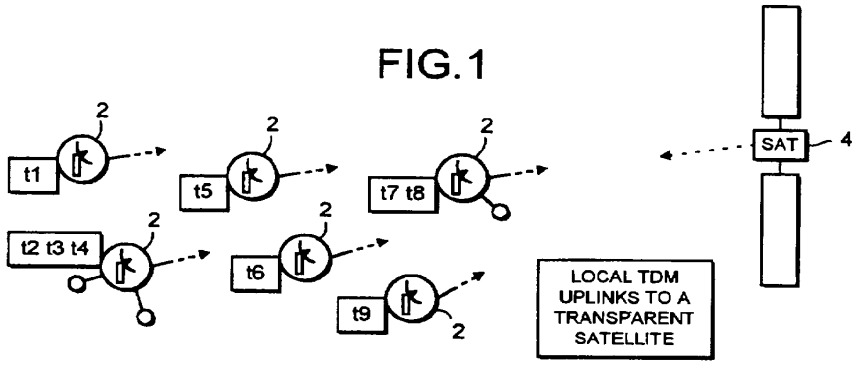

GB 2 330 491 A

At least one drawing originally filed was informal and the print reproduced here is taken from a later filed formal copy.

FIG.1

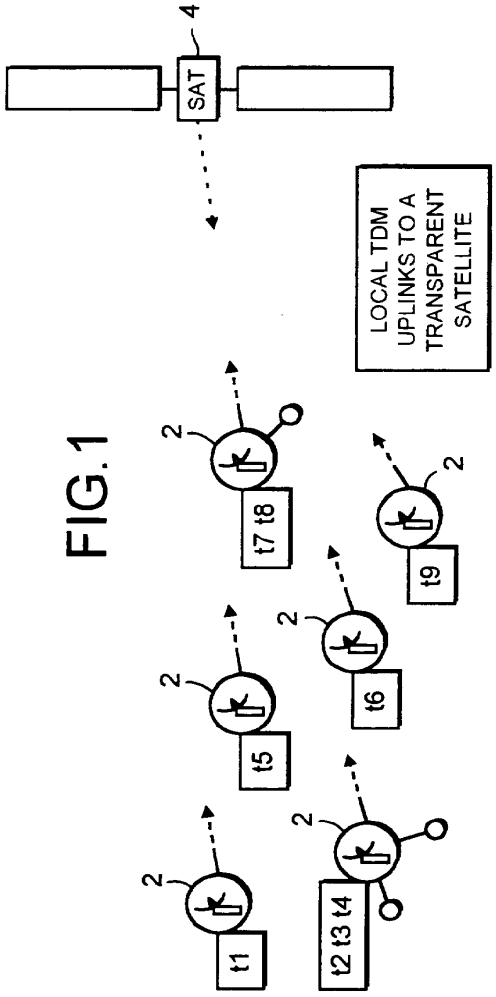
4
SAT
LOCAL TDM UPLINKS TO A TRANSPARENT SATELLITE
2
t7 t8
2
t9
2
t6
2
t5
2
t2 t3 t4
2
t1

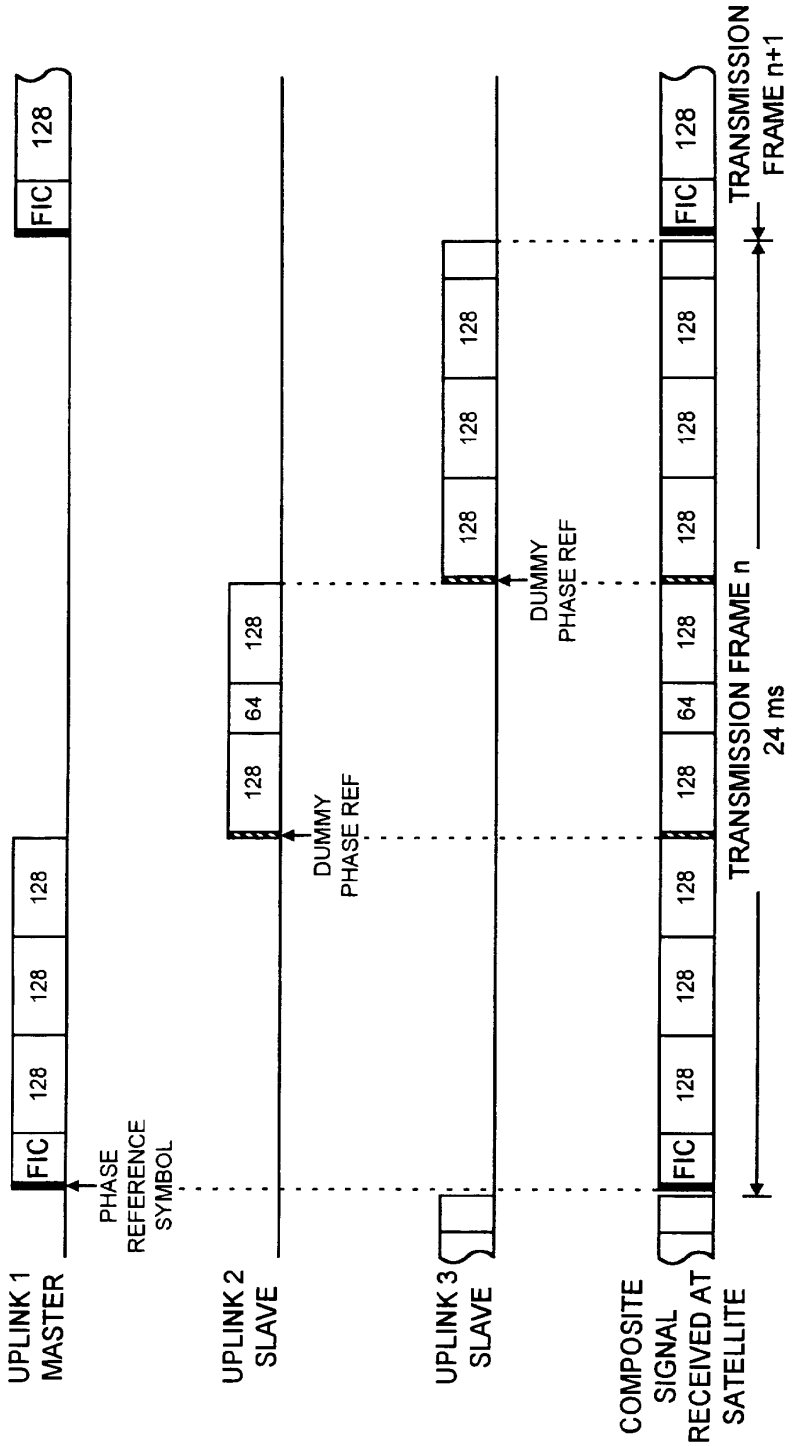
UPLINK 1
MASTER
FIC
128
128
128
128
PHASE
REFERENCE
SYMBOL
UPLINK 2
SLAVE
128
64
128
DUMMY
PHASE REF
UPLINK 3
SLAVE
128
128
128
DUMMY
PHASE REF
COMPOSITE
SIGNAL
RECEIVED AT
SATELLITE
FIC
128
128
128
128
64
128
128
128
128
128
128
128
128
TRANSMISSION FRAME n
24 ms
TRANSMISSION
FRAME n+1

FIG. 2

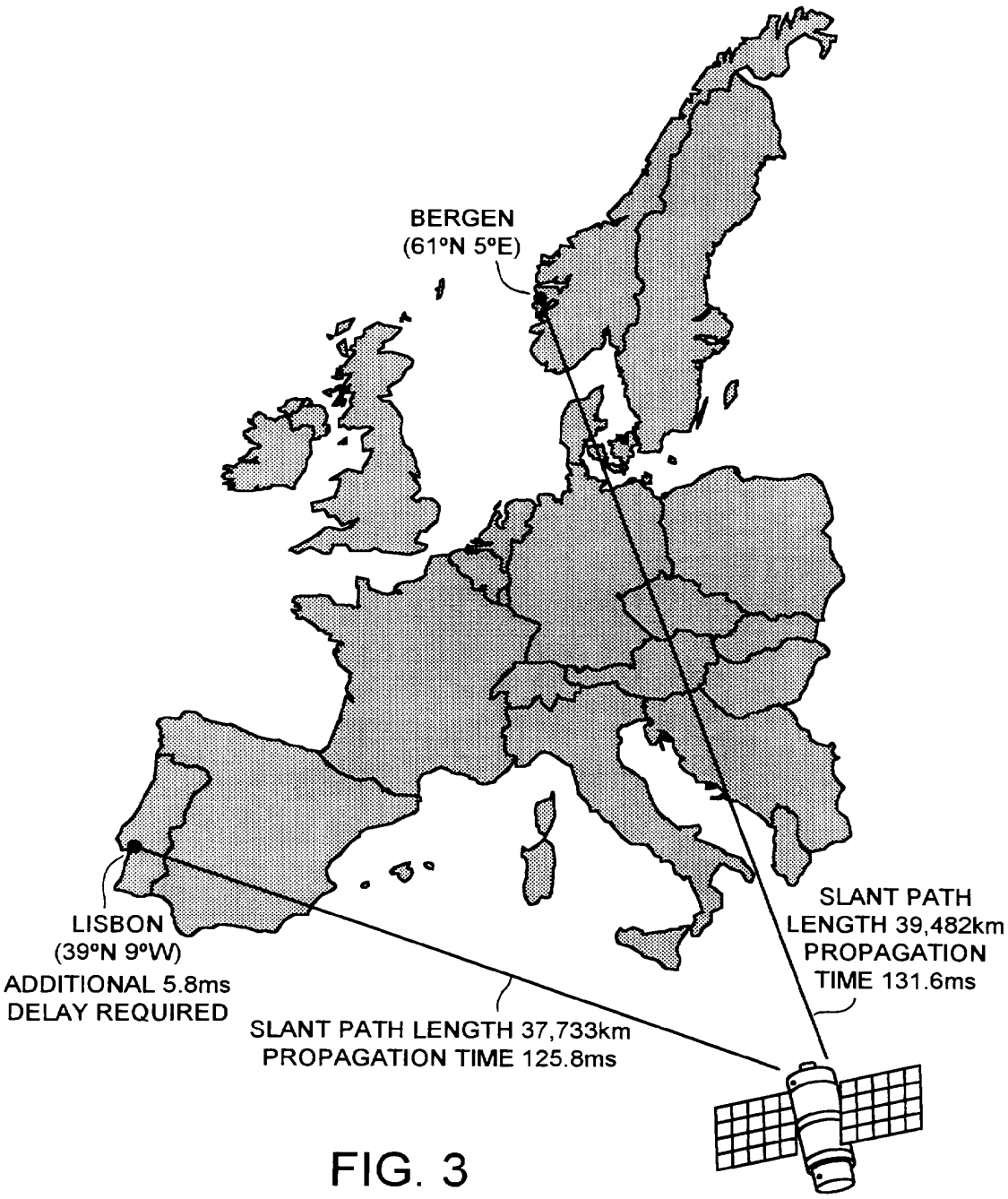

FIG. 3

SLANT PATH LENGTH FROM TWO EUROPEAN CITIES TO EMS

EMS IN GEOSTATIONARY ORBIT AT 10.2°E

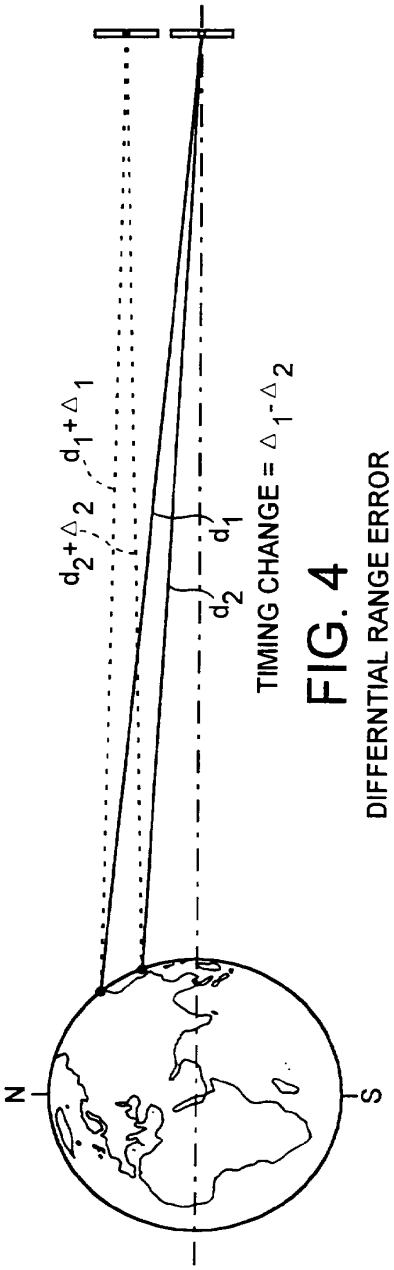

FIG. 4
DIFFERNTIAL RANGE ERROR

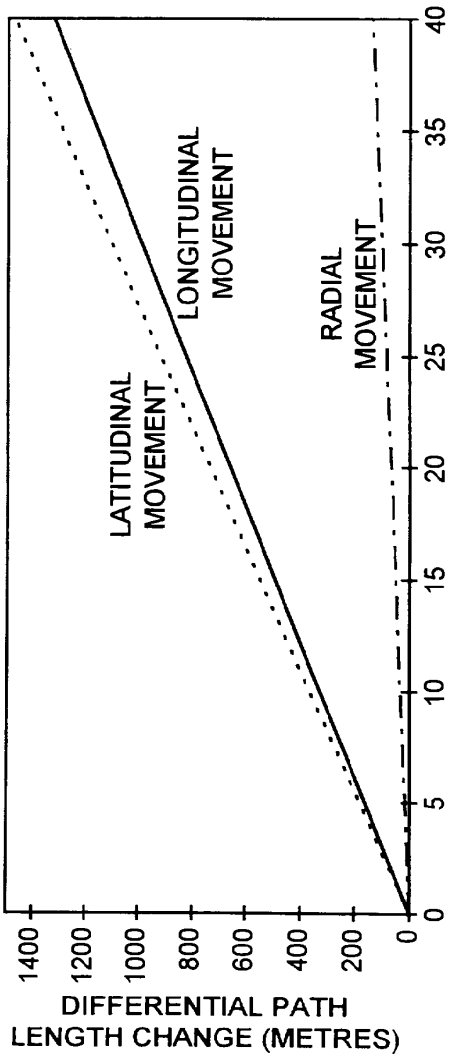

FIG. 5

FIG. 6

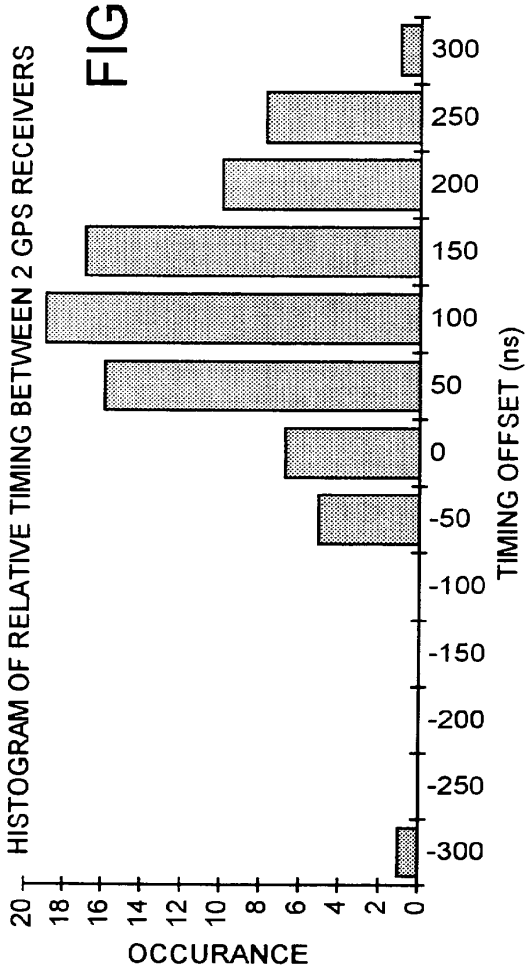
HISTOGRAM OF RELATIVE TIMING BETWEEN 2 GPS RECEIVERS
OCCURANCE
TIMING OFFSET (ns)
20
18
16
14
12
10
8
6
4
2
0
300
250
200
150
100
50
0
-50
-100
-150
-200
-250
-300

FIG. 7

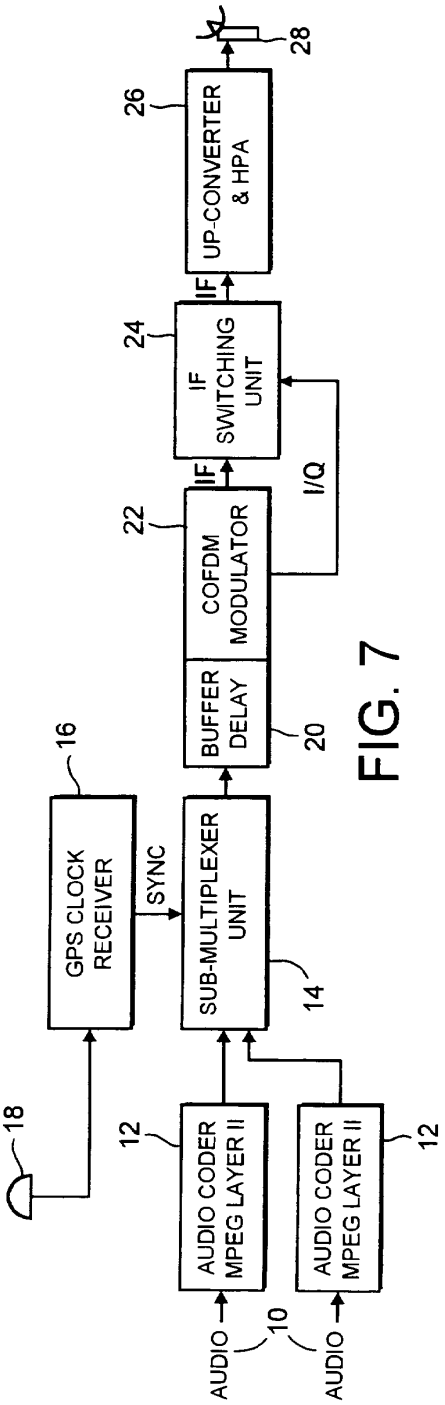
AUDIO
AUDIO
10
AUDIO CODER MPEG LAYER II
AUDIO CODER MPEG LAYER II
12
12
18
GPS CLOCK RECEIVER
16
SYNC
SUB-MULTIPLEXER UNIT
14
BUFFER DELAY
COFDM MODULATOR
20
22
IF
I/Q
IF SWITCHING UNIT
24
IF
UP-CONVERTER & HPA
26
28

2330491

DIGITAL BROADCAST SYSTEMS

This invention relates to digital broadcast systems such as digital audio broadcast (DAB) and in particular to a system which enables digital broadcasts from two or more different broadcasters to be combined in a single broad band transmission.

The Eureka-147 DAB system which has been proposed as a practical implementation of digital audio broadcasting operates by using a coded orthogonal frequency division multiplexed (COFDM) system. In this, a large number of carriers are spread over a broad frequency band to carry digital data. Each carrier is modulated with the data so as to carry two bits of data by using quadrature phase shift keying (QPSK). Groups of these carriers are then transformed to the time domain by a Fast Fourier transform to produce what is known as a DAB symbol. A plurality of these symbols are assembled and between them are able to carry data from a large number of channels. The symbols are transmitted together in a DAB frame or multiplex comprising a series of symbols and which commences and terminates with a null symbol for synchronisation. A typical transmission bandwidth of 1.53 MHz can typically accommodate 5 or 6 channels.

Satellite delivery of digital broadcasts is seen as an attractive option for international broadcasters because it provides coverage of large areas at relatively low costs.

Because a Eureka-147 DAB ensemble carries not just one but several audio channels or other services, several co-operating broadcasters would need to share an ensemble between them. This can be relatively easily accomplished at a national level where there are both national and

local broadcasters by leaving free symbols in national broadcasts into which local broadcasters can insert data. These would typically be combined at a single site and can then be transmitted over the relevant area.

Where it is desired to combine broadcasting over a number of different countries, e.g. UK, France, Germany and Austria, and transmit them as a single DAB ensemble over all of those countries, the combination at a single terrestrial uplink site becomes impractical because of the cost of terrestrial data lines.

One solution is to use a dedicated satellite with an on-board processor to which all the broadcasters transmit. The satellite then combines all the data and produces a single DAB ensemble from this. The problem with this, of course, is that a dedicated satellite has to be launched in order for the system to become operational.

A preferred embodiment of the present invention provides a system in which a number of different broadcasters each transmit a section of a COFDM ensemble from an uplink site to a conventional satellite in time division multiplex slots. The satellite then amplifies and frequency shifts the received signals before transmitting them over its area of coverage. No on-board processing is involved other than would be used for a conventional radio transmission. Each uplink site would need to be adequately synchronised to the others so that the resulting composite COFDM signal appeared seamless when transmitted by the satellite. This can easily be achieved using the global position system (GPS).

The invention is defined with more precision in the appended claims to which reference should now be made.

The invention will now be described in detail by way of example with reference to the accompanying drawings in which:

Figure 1 shows schematically a number of uplink sites transmitting signals to a conventional satellite in time division multiplex (TDM) slots for retransmission over the satellite's area of coverage in an embodiment of the invention;

Figure 2 shows schematically the combination of DAB symbols from three different uplink sites in accordance with an embodiment of the invention;

Figure 3 shows schematically the different slant path lengths from two European cities to a satellite in geostationary orbit;

Figure 4 shows the differential range for a satellite in geostationary orbit;

Figure 5 is a graph showing the relationship between differential path length and the distance moved by the satellite;

Figure 6 is a histogram showing relative timings between 2 GPS receivers; and

Figure 7 is a block diagram of an uplink site of the type shown in Figure 1.

It is envisaged that in an embodiment of this invention a multiplexed uplink system would involve two or more uplink sites of the type shown in Figure 1. These can be receiving one or more signals, coding them with COFDM and transmitting them in preassigned time slots to a satellite. Each uplink site provides a portion of the COFDM signal directly to the satellite. The multi carrier nature of the Eureka DAB signal with its frequency and time interleaving means that mapping of a particular bit

pair onto a particular carrier is very complex. Whilst it would be technically possible to identify which carriers are associated with each uplink contribution, it would then be necessary to be able to suppress each carrier on an individual basis. This would be considerably more difficult than switching all of the carriers on and off simultaneously at single symbol boundaries. As will be seen, this is not a severe constraint and greatly simplifies the handover process.

A time division multiplex system of the type embodying the present invention requires a fairly radical rethink of the requirements of the DAB transmission chain. The TDM system requires complete shutdown of the transmitters RF output at frequent and regular intervals. At present there is no structure to enable the COFDM generator to switch off all the carriers at selective times. Inserting zeros into the multiplex is not the solution since the carriers are phase modulated and this would generate a symbol representing a digital zero. Therefore, TDM operation produces a requirement for a 3-stage control of the COFDM transmitter output, a digital one, a digital nought, and a suppressed carrier. This can be done in two ways.

In the first method, the symbols which are not going to be transmitted from the specified uplink are filled with dummy data and the RF output of the COFDM generator is switched off for the duration of the other contributions. As the contributing uplink sources only need to switch at a symbol boundary, this option is relatively simple. A small amount of logic is required to count through the symbols of each frame and switch at the appropriate time.

The second method is to configure the multiplexer and COFDM generator internally to switch off the unwanted carriers for the required time. The configuration is controlled from the multiplexing unit and a new interface to the COFDM generator. A new control mechanism would be required if the multiplexer was to be able to control adequately the COFDM generator. This requires access to the software on both devices.

In the TDM uplink arrangement, the transition points between the separate uplink signals as received at the satellite deserve special consideration. Apart from the problems of synchronisation, there is the problem introduced by the use of differential QPSK modulation. The receivers which are proposed for use with the signal decode each symbol in the ensemble with reference to the phase of the previous symbol (except for the first symbol of every transmission frame which is the fixed reference symbol). This is transmitted by uplink station number 1, the master, and is shown in Figure 2.

The other uplink sites are called slaves. Data uplinked by these slave stations cannot be differentially decoded from the beginning because the previous symbol will originate from a different uplink site and will therefore have no useful phase relationship. Because of this, the first symbol of a slave contribution cannot be differentially decoded to provide any useful data. However, its phase state does then become the reference for the second symbol, thereby allowing the remaining symbols from that uplink contribution to be decoded as normal.

To solve this problem, a dummy phase reference symbol is inserted at the start of each slave contribution as shown in Figure 2. The multiplexer can easily be

configured to insert a dummy service component occupying just a single symbol which it fills with random data or any other data. As the system is differentially modulated, the following symbol will be demodulated with reference to the dummy symbol.

The system of Figure 2 shows three multiplex uplink sites carrying contributions of 128 K-bits/s and 64 K-bits/s as part of a TDM arrangement. The lower line of the diagram shows how the dummy phase reference signals inserted by each slave uplink site become part of the overall composite signal received and retransmitted by the satellite.

Loss of the first symbol of each uplink contribution is not a great problem. In Mode III DAB there is a low data-rate per symbol and this means that only 384 bits are lost for each slave uplink. This amounts to just under 0.7% per symbol and an arrangement using 10 geographically separate uplink sites (i.e. one master and nine slaves) would reduce the user capacity by only 6.25%.

Although a transitional dummy phase reference symbol cannot be used to carry any useful data, it may be used for carrying status information between uplink sites (by using a non-standard receiver).

The composite signal transmitted from the satellite will be the combined result of the several different uplink stations. However, it must not exhibit any artefacts of its TDM origination. Three fundamental parameters which must be kept as constant as possible are:

1. synchronisation
2. uplink frequency
3. power level.

The handover between uplinks must not create overlaps or gaps in the signal, the power level must be constant throughout the transmission frame, and the frequency for each uplink must be the same so as not to create any discontinuity. That is to say, the final signal reaching the receiver must appear to be the result of a single transmission chain, rather than the combination of several contributing uplinks.

At the handover point between contributing uplinks, the timing error needs to be accurate to within a fraction of a symbol duration. For Mode III DAB the total symbol duration is 156 microseconds, (which includes a guard interval of 31 μs). Any "data collision" arising from a mis-aligned uplink would probably cause the loss of some data from both uplinks. In addition, such a data collision would increase the input power to the satellite by 3 dB. Given the finite power capability of a satellite transponder, and the fact that it is likely to be operating close to saturation, this could affect other users of the transponder or even drive the HPA into an overload condition.

A lack of data at the appropriate time could also create problems. In particular, the Eu-147 system uses the null symbol for coarse synchronisation in the time domain, therefore a data gap in the composite signal could be misinterpreted as a null symbol, thereby causing complete synchronisation failure at the receiver, resulting in none of the services on that multiplex being received. Therefore, it is also equally important that a contributing uplink does indeed fill its allocated time-slot.

Various factors must be considered and corrected for to insure that the uplink contributions arrive at the satellite's input antenna at the exact time required.

An uplink site suitable for use in the present invention is shown in figure 7. In this particular example the uplink site is combining two local audio signals for uptransmission to a satellite. Each audio signal is first fed to an MPEG audio coder 12. This compresses the audio data. It is next synchronised in a sub-multiplexor unit 14 which receives a synchronising signal from a global positioning system (GPS) clock receiver 16 which receives the GPS signal via an antenna 18. The multiplexor audio signal is then passed to a buffer delay 20 which feeds them at appropriate intervals to a COFDM modulator 22. This produces a frame of COFDM symbols.

These symbols are supplied to an IF switching unit 24. This counts through the earth COFDM symbols in the frame in response to a clock signal which is supplied by the COFDM modulator 22 in its I/Q bus. The switching by the IF switching unit 24 makes sure that only symbols containing data relating to the two audio signals 10 are passed to an upconverter and high power amplifier 26 which then sends them to an antenna 28 for transmission to the satellite of Figure 1.

It will thus be appreciated that the system of Figure 1 comprises six uplink units similar to that of Figure 7. Four of these are handling only one audio signal, one is handling two audio signals and a final one is handling three audio signals. Each will be synchronised by its GPS clock receiver unit 16 and thus will insert audio data in symbols at different time periods to those used by other

uplink stations such that at the satellite a complete frame of data will be received.

If a more sophisticated receiver is used, the dummy symbol could carry other information. The first portion could be used as the phase reference. For example, a specific data pattern could be included. This could then be monitored by the various uplink sites to aid synchronisation of uplink contributions.

The dummy symbol could also be used as a data channel to feed back, to the uplink site providing the first contribution for each frame, information to go into the Fast Information Channel (FIC) which the first transmitter compiles and which describes the structure of the frame. Thus, it describes which symbols contain data for each channel and, clearly, which symbols are dummy symbols.

Thus, the data is fed to the transmitter compiling the FIC via the satellite. No land line is required.

Other data which could be included in the dummy symbol are an audio channel for communication between the uplink sites or additional data for various commercial services.

Furthermore, at each uplink site a receiver can be provided to monitor the timing and frequency of the dummy symbol it transmitted to the satellite. This can then be used to adjust the timing and frequency of the signal provided by the transmitter.

Slant Path Length Compensation

The uplink stations will be located at arbitrary locations on the Earth's surface and will all experience different path lengths to the satellite. In order to create a seamless composite DAB signal the uplink sites with short

path lengths will need compensating delays so that their contributions do not arrive too early.

Given the orbital location of the satellite, and the latitude and longitude of the uplink station, the path length can be readily calculated. Taking a European example, as illustrated in Figure 5:

For a satellite at:	10.2° East
Uplink 1:	Lisbon 39°N 9°W
Uplink 2:	Bergen 61°N 5°E.

The nominal difference in the slant path range between the two earth stations and the satellite is 1,749 km, which corresponds to a delay of 5.83 ms.

This could easily be compensated for by delaying the transmission from the Lisbon uplink site (which is closer to the satellite) by an equal amount. (This then allows the placement of the contributing signal at any point in the DAB transmission frame.)

The maximum possible slant path length would be experienced by an earth station on the very edge of the uplink coverage zone where the elevation angle is lowest. It is generally accepted that a minimum earth station antenna elevation angle of 5 degrees is required, and at such a location this gives a maximum possible slant path length of around 41,130 km (corresponding to a one-way propagation time of 138 ms). On the other hand, the *shortest* possible slant path distance would be from an earth station exactly at the sub-satellite point at a range of 35786 km, corresponding to a delay of 120 ms. The location of *any* uplink site can therefore be compensated for using a delay of no more than 18 ms, the

exact figure depending on its geographical location relative to the satellite.

The BBC COFDM generator (CD2M/44) has a built in compensating delay of up to 4 ms, adjustable in increments of 488 ns, while the Marconi-Eddystone COFDM generator can manage a delay of up to 476 ms, adjustable in steps of approximately 1 μs.

While the difference in the slant path length is the obvious (and major) consideration in synchronising the uplink stations, there are several other factors which affect the accuracy of the timing of each contribution. Some effects will create a common variation in the propagation delay between all the earth stations and the satellite, causing the whole DAB signal to arrive at the incorrect time. Other effects will cause differential errors which adversely change the synchronisation between the uplinked contribution signals.

Although termed "Geo*stationary*", a satellite in GEO orbit will always have a tendency to wander a little, due to the Earth's gravitational irregularities, the influence of the Sun and Moon and solar pressure. These perturbations in the satellite's intended position complicate the uplinking of a TDM based system. As the satellite wanders about, the path length from the geographically separate contributing uplink sites will obviously vary. The normal satellite station keeping tolerance is usually quoted as +/-0.05° in each plane, corresponding to maintaining the satellite's position within a cube of sides approximately 80 km. This movement can therefore give the calculated slant path length an error of around +/- 40 km.

If this path length variation was identical for every uplink site then each uplink contribution would arrive at

the satellite slightly 'early' or 'late' but would maintain its place in the DAB frame. The whole broadcast signal would then arrive a few microseconds 'late' or 'early' but there would be no overall effect on synchronisation *between* the uplinks.

But, while the path length change between various uplink sites and the satellite is indeed *largely* the same, any station keeping error will usually create a small but significant *differential* change in these path lengths, which means a synchronisation error would be introduced between the various signals arriving at the satellite. This is illustrated in Figure 4 where d_1 and d_2 are the original distances from the uplink sites to the satellite, and Δ_1 and Δ_2 are the changes in distance due to orbital drift. If Δ_1 is then different to Δ_2, then a synchronisation error will be introduced.

Satellite station keeping errors can be resolved into three orthogonal planes - latitudinal - i.e. North/South, longitudinal - i.e. East/West, or radial - i.e. towards or away from the Earth. The magnitude of the differential change varies widely depending on the satellite's plane of movement, the location of the uplink sites and the magnitude of the error in the satellite's station keeping.

The maximum possible differential range would be between two uplinks at the extreme (5° elevation) and opposite edges of a global uplink coverage zone, with the satellite moving in the same plane. This would give a differential timing change of 1 μs/km of satellite movement. In practice, very few uplink sites operate at these extremes and it is likely that most would be within a couple of thousand miles of each other.

Taking the Bergen/Lisbon/EMS example again, the nominal path length difference was shown to be 1,749 km

corresponding to a 5.83 ms fixed delay. Figure 5 shows the differential distance variation between the Bergen and Lisbon uplink paths for variations of the orbital position over the range +/- 0.05° or +/- 40 km in each of the three planes.

For a change in the satellite's latitude, Lisbon, being further south than Bergen, experiences a smaller rate of change of path length than Bergen, and at the extremes the error can be +/- 1344 metres, corresponding to +/- 4.5 μs (which at 0.06 μs is a long way short of the theoretical maximum shown above). For a change in the satellite's longitude a similar magnitude of differential error is experienced, while for a radial change in position, both uplink sites experience very similar changes, resulting in little differential error.

The maximum change in timing would therefore occur when the satellite is at its maximum latitudinal error, and maximum longitudinal error and maximum radial error, combined with two uplink sites located in the same plane as the satellite's positional error. For uplink sites exclusively within Europe and a satellite station-keeping accuracy of +/- 0.05°, this would result in a maximum variation of around +/- 10 μs, equivalent to +/-3 km. For worldwide uplinking the error could reach +/- 20 km (+/- 67 μs).

Slant path calculations are generally based on the assumption that the Earth is a uniform sphere. In reality it is an irregular ellipsoid, with a polar radius of 6256.74 km, and an equatorial radius of 6278.12 km, meaning the Earth is slightly 'wider' E-W than it is 'tall' N-S. While slant path length calculations generally use an average figure for the radius, this is not accurate enough for the TDM application. In addition,

the 'radius' of the Earth varies along any circumference due to further irregularities in the geodetic sphere. Therefore, if the Earth is incorrectly assumed to be a regular sphere, then the slant path distance may be in error by perhaps +/- 10 km, equivalent to a timing error of +/- 33 μs.

Several geodetic models have been proposed to approximate the Earth's shape, with GPS for example using "WGS 84". This enables errors due to ellipsoid geometry to be reduced to just a few metres.

The Earth station's height above sea level can also contribute to a timing error if it is located near the sub-satellite point. Mexico City, the uplink location for our first Eu-147 DAB satellite tests, is at an altitude of around 2 km above sea level.

Each of the contributing uplinks will need to be synchronised to a common time reference. The Global Positioning System (GPS) is a relatively low cost method of global timekeeping and can provide synchronisation to an accuracy of around 1 μs anywhere in the world. With this application in mind, a pair of GPS based master reference clocks were tested and a histogram produced is shown in Figure 6.

The samples were taken over a period of several weeks, at irregular intervals of at least 15 minutes. As can be seen, there is a distinct fixed offset between the two receivers (an average of 130 ns) but excluding this offset, around 97% of the results show the receivers to be within 175 ns of each other. While the standard GPS specification provides a dithered signal accurate to within +/-340 ns of GPS time/UTC for 95% of the time, the affect of the GPS receiver's flywheel circuitry smooths out the short term phase noise giving a better result.

While the antennas of the two GPS receiver used for the test were located only 0.3 metres apart, the manufacturers claim that similar results would be obtained if the receivers were thousands of miles apart.

The effect of the ionosphere varies depending mainly on sunspot activity, time of day, and path length through the ionosphere (which in turn depends on the satellite's elevation angle). The error contribution for the downlink path at 1.5 Ghz is likely to be less than 20 metres and will be common to all contributions. Atmospheric refraction on the uplink paths (typically 14 Ghz) is likely to be less than 1 metre (3 ns) and so will have a negligible affect on any particular uplink contribution.

Even a transparent transponder satellite will experience a small throughput delay, due mainly to filtering. This delay will be common to all contributions.

It has been shown above that there are several factors which will influence the accuracy which is achievable from a slant path distance calculation, and these are summarised in the table below. Some factors only cause an overall delay to the composite signal which is of little importance. Others (marked with a *) create a synchronisation error which may need to be compensated for. The figures given are 'typical worse case' examples.

Parameters:	**Distance Error**	**Time Error**
1. Irregular ellipsoid geometry of Earth	10 km	33 μs
2. Height of earth station a.s.l.	2 km	6.7 μs

3. Atmospheric refraction (downlink @ 1.5 Ghz)	20 metres	67 ns
4. Satellite processing delay	1 km	3.3 μs
5. Station keeping accuracy of satellite	80 km	266 μs
[Differential error due to station keeping]	*6 km**	*20 μs*]*
6. Synchronisation clock	300 metres*	1 μs*
***Differential errors** (creating synchronisation errors)	**6.3 km**	**21 μs**

Therefore, under poor conditions the timing change between *two* uplink stations in widely separated locations could be double this figure at **42μs**.

While several factors cause a delay common across all uplinks this can be compensated for with a fixed delay, but the time-varying differential error due to satellite drift and GPS receiver clock error will always remain and, depending on the uplink location, this could be significant. Using DAB transmission Mode III the guard interval is only 31 μs, and in a hybrid satellite / terrestrial gap filler system, the erosion of the guard interval due to synchronisation errors would be particularly detrimental.

While the fixed components can all be compensated for by using the programmable internal delay of the COFDM generator, the time varying components may need to be eliminated by some form of closed loop control system based on the composite broadcast signal received at each slave uplink site as discussed earlier.

In a single uplink application the up-converter which mixes the signal to its final uplink frequency need not be

particularly stable as the receiver's AFC is capable of compensating for some error. However, in the COFDM uplink multiplexing system, the receiver's AFC and phase reference circuitry operate only on the first symbol of the DAB frame, and therefore only "tune in" to the master station. Switching to a different signal (i.e. a slave contribution) part way through the frame means a step change in the frequency, and any frequency difference gives rise to a loss of ruggedness of the signal. Therefore, each uplink site must employ a highly stable up-converter. The fact that Eu-147 uses differential coding is of benefit here, as it is the phase change between symbols which is important rather than absolute phase. A frequency reference with a short term (1000 seconds) frequency accuracy of <5 in 10^{10} is typically available from GPS clock receives which could assist in frequency matching of all slave stations.

Doppler Shift

Geostationary satellites do not normally create any significant doppler shift of their own due to their fixed orbit (but a mobile terrestrial receiver will experience some doppler shift due to its own velocity unless the satellite is directly overhead). However, doppler shift may be a problem during a repositioning manoeuvre (when compensating for orbital drift), when the satellite may have to move many kilometres in a short period of time.

The frequency shift is caused by two components. The frequency of the uplink transmission (typically at Ku band, 14 Ghz) will appear to be slightly altered, while the frequency of the downlink (broadcast signal) will also change, and in the same direction, compounding the problem. However, because doppler shift is proportional

to frequency, the uplink accounts for around 90% of any frequency change. A fixed frequency error throughout the transmission frame is not a problem as it can be tracked by the AFC circuitry in the consumer's receiver. But in an uplink multiplexing arrangement, the doppler could create a step change in frequency part way through the frame, thereby degrading the quality of the slave contributions.

As the satellite undergoes its repositioning manoeuvre, each uplink signal may experience a different doppler shift, the magnitude of which will vary with the direction of movement of the satellite. The difference between the frequency shifts of the transmissions from the individual uplink sites depends on their geographical separation (in a similar way to the change in time synchronisation with satellite movement).

Again, the frequency change is dependant on the satellite's velocity (i.e. speed and direction) and the geographical location of the uplink sites. The worse case situation would be between two uplinks at the extreme (5° elevation) and opposite edges of a global uplink coverage zone, with the satellite moving in the same plane. This could create a frequency step of approximately 15V Hz, where V is the velocity in metres/sec, (however this is a rather extreme and unlikely case). Monitoring the frequency transmitted by the satellite at each uplink site enables automatic feedback control of the uplink transmission to be achieved.

Repositioning is only likely to occur every few weeks and it may be possible to request that it happens at a convenient time of the night when audience figures are low (e.g. 04.00 am).

For a power limited system such as this where the link margin may well be just 2 dB, it is vital that the downlink power budget is maximised, and so the satellite must operate at its optimum power output. This requires that the power level of each contribution to the COFDM transmission frame should be matched to within a fraction of a dB when it arrives at the satellite's input antenna. Gain compensation for incorrect uplink power levels will not be possible at the satellite, and so each uplink site will have the responsibility of ensuring that its own power level matches that of the master station.

The signal levels received at the satellite will depend on several factors - nominal uplink power setting, amplifier efficiency, transmitting antenna misalignment, equipment ageing, satellite receiving antenna gain variation with direction, spreading loss (due to the geographical location of the uplink site). In addition to these "fixed" variables the effect of atmospheric attenuation, and in particular the affects of local rain can change the effective *uplink* power level by 1 or 2 dB in only a few seconds.

The simplest way of achieving a constant envelope would be to monitor the broadcast signal at each slave site, and adjust the local uplink power as required. This would then take into account all the above variables and can be done automatically with a feedback loop.

MULTIPLEX CONFIGURATION AND THE FAST INFORMATION CHANNEL

In a normal single transmission chain system, the multiplex can be reconfigured dynamically, with the corresponding Multiplex Configuration Information (MCI) being signalled in the Fast Information Channel (FIC). In the TDM uplinking system it is not possible to time

multiplex the FIC data and so the master uplink station alone would provide the FIC and hence the MCI. This leads to some limitations in the way the multiplex can be reconfigured. For the multiplex to operate correctly it is essential that the data supplied by the MCI matches the actual configuration transmitted by each of the slave uplink sites.

The simplest method is obviously for all parties to agree on a semi-permanent multiplex configuration. The MCI will therefore only need to be changed on the rare occasion when a radical reconfiguration is required, and a suitable scheme could be developed to ensure that all parties complied with the pre-agreed changes.

Where a multiplex reconfiguration is limited to an internal change at one uplink site only, so that the capacity transmitted from that site (i.e. the total number of symbols) remained constant, only the master and that particular slave site need to make any changes. However, a multiplex reconfiguration may require a change in the total capacity contributed by a particular site, and this would involve notifying the other affected sites of the impending change.

When the total number of symbols per frame transmitted by an uplink is to change, a complication arises. The multiplex reconfiguration is not an instant event due to the affect of the time interleaving process, and to comply thoroughly with the Eu-147 specification, would require that some of the data would continue to originate from the first uplink even after the second uplink had started to contribute to its newly acquired symbol. The mapping of bits onto carriers and the necessary switching is extremely complex and while such a

scheme would not be impossible to implement, the benefits would be perhaps marginal.

It is worth noting that while terrestrial DAB will experience roughly the same change in demand across all services through the day, for satellite DAB the situation is different. The different time zones covered by a single beam could mean that a particular service aimed primarily at the eastern edge of its coverage may require a larger proportion of the multiplex at the peak listening time of the day, and a few hours later may wish to relinquish some of its capacity to an uplink site primarily serving the western edge of the downlink beam as this region approaches its own peak listening time.

One of the disadvantages with any TDMA like scheme is that the transmission equipment must be rated for the peak power levels, even though the average power output may be relatively low. For example, the normal RF power requirement for a DAB uplink, supplying a full multiplex, is typically around 10 Watts. However, the amplifier would need to be backed off by several dB from saturation (to prevent non-linear distortion), and so will need to be rated at around 30 Watts. A single uplink of 128 kbits/s contributing to the 1.152 Mbits/s DAB multiplex will only be operating at 11% duty cycle - in this case with an average power of 1.1 Watts but even so the amplifier used must still be rated at 30 Watts.

For each of the specified DAB operating modes, the carrier spacing is approximately proportional to the transmitting frequency. This means that the affects of oscillator phase noise and doppler shift, which scale with frequency, also remain constant. While for DAB Mode III the carrier spacing of 8 kHz is adequate for the transmitting frequency of around 1.5 Ghz, the *uplink*

frequency is likely to be several times greater than this, with most uplinks operating at around 6 Ghz (C-band) and 14 Ghz (Ku-band). Any phase noise in the up-converter therefore contributes to a degradation of the DAB signal, and so this component must be carefully chosen.

With any time multiplexed system it is vital that every contributing source is operating correctly synchronised so that it only transmits during its allocated period, otherwise errors will occur. It was pointed out in the section describing timing accuracy that a data collision may not only cause a data loss, and in severe cases may also cause amplifier overload or a reduction in available power for other users of the transponder.

In particular, the first few data bits of every MPEG audio frame carry the very important MPEG header bits used for audio frame synchronisation. This data is mapped into the first symbol of the DAB audio frame, and so even a one symbol overlap due to an incorrect configuration may cause a complete loss of audio for the second contribution. (Although the ETSI standard uses a 16-bit time interleaving process to shuffle the data around between frames, it does not change the relative position of the data within the frame, making the data particularly sensitive to frame rate effects).

In the Eu-147 system, the null symbol is essential for coarse synchronisation in the time domain and so if a slave uplink fault condition creates a gap, this can be misinterpreted as a null symbol, thereby preventing the receiver from acquiring synchronisation, and therefore resulting in *non* of the services on that multiplex being received.

In the event of a slave uplink being unable to provide a correctly timed signal at the correct frequency and with an appropriate power level it would be wise for it to drop out immediately, and be replaced by the master uplink for the duration of the fault. Therefore the master uplink station needs the flexibility to allow it to cover for fault conditions at any of the slave sites.

The cost of the *additional* equipment required to implement a time division multiplexed uplink, as described is relatively small. On the top of the usual equipment required for a 'hub' earth station (multiplexer, COFDM generator, upconverter and power amplifier), the only two extra pieces of equipment required for TDM operation are the GPS master clock receiver, costing around £2,000 and an RF switching unit, which if manufactured commercially would cost approximately £2,000.

CLAIMS

1. A method for transmitting a multi-carrier signal having a regular frame structure and symbol rate comprised of contributions from a plurality of different transmitters comprising the steps of:

a) transmitting the contributions from each transmitter to a central transmitter in preassigned time slots;

b) retransmitting the thus received contributions as a single signal over a predetermined area of coverage; and

c) inserting at the start of each contribution a dummy symbol for use as a phase reference for demodulating succeeding symbols in that contribution.

2. A method according to claim 1 in which the central transmitter comprises a satellite in geostationary orbit and the plurality of transmitters comprise earth based transmitters.

3. A method according to claim 1 in which the central transmitter comprises a stratospheric platform in geostationary orbit and the plurality of transmitters comprise Earth based transmitters.

4. A method according to claim 2 or 3 including the step of providing a timing reference signal to each earth based transmitter.

5. A method according to claim 4 in which the step of providing a timing reference comprises detecting a

global timing signal transmitted by a global positioning system (GPS).

6. A method according to claim 2 or 3 comprising the step of providing common frequency reference signals to each Earth based transmitter.

7. A method according to any preceding claim including the step of delaying transmission of signals from each Earth station to the satellite in dependence on the position on the Earth's surface of each Earth station.

8. A method according to claim 7 including the step of monitoring at each Earth station the COFDM signal from the satellite and adjusting the delay applied to transmissions from the Earth station to compensate for any timing errors caused by other factors.

9. A method according to claim 8 in which timing errors are caused by the relative position and velocity of the satellite or stratospheric platform.

10. A method according to any preceding claim including the step of monitoring at each transmitter the timing and frequency of the contribution supplied by that transmitter after re-transmission by the central transmitter, and adjusting the timing and frequency of the signal to be transmitted in dependence on the received signal.

11. A method according to claim 10 in which the dummy symbol includes a predetermined pattern of data

which are used for monitoring the timing and frequency of signals received at each transmitter.

12. A method according to any preceding claim in which at least part of the dummy symbol is used to transmit data to dedicated receivers.

13. A method according to claim 12 in which the data for dedicated receivers is used as data for voice communication channel between Earth stations.

14. A method according to any preceding claim in which at least part of the dummy symbol is used as a data channel to supply data to the transmitter providing the first contribution in each frame of data for inclusion in an information signal defining the structure of the frame.

The Patent Office

27

Application No: GB 9721862.2 **Examiner:** Ken Long
Claims searched: 1 to 14 **Date of search:** 15 April 1998

Patents Act 1977
Search Report under Section 17

Databases searched:

UK Patent Office collections, including GB, EP, WO & US patent specifications, in:

UK Cl (Ed.P): H4M (MTQA1-3 & MTQX1-3) & H4P (PAL, PSB & PAPS)

Int Cl (Ed.6): H04J 3/06 H04B 7/212 & H04L (7/04 & 27/26)

Other: NONE

Documents considered to be relevant:

Category	Identity of document and relevant passage		Relevant to claims
A	GB 2313527 A	MITSUBISHI	None
A	EP 0683576 A1	HITACHI	None
A	WO 94/08405 A1	MOTOROLA	None
A	US 4574379	AT&T	None

X	Document indicating lack of novelty or inventive step	A	Document indicating technological background and/or state of the art.
Y	Document indicating lack of inventive step if combined with one or more other documents of same category.	P	Document published on or after the declared priority date but before the filing date of this invention.
&	Member of the same patent family	E	Patent document published on or after, but with priority date earlier than, the filing date of this application.

DISH
Exhibit 1003 Page 230

PATENT ABSTRACTS OF JAPAN

(11)Publication number : 10-084329
(43)Date of publication of application : 31.03.1998

(51)Int.Cl. H04J 11/00

(21)Application number : 08-238917
(22)Date of filing : 10.09.1996

(71)Applicant : NIPPON HOSO KYOKAI <NHK>
(72)Inventor : SATO SHOE
SAITO TOMOHIRO
MORIYAMA SHIGEKI

(54) TRANSMISSION METHOD FOR OFDM MODULATION SIGNAL, OFDM TRANSMITTER AND RECEIVER

(57)Abstract:
PROBLEM TO BE SOLVED: To prevent production of distortion by spreading a reference phase of each carrier of the frequency orthogonal division multiplex (OFDM) system and changing the amplitude of each carrier of the OFDM without giving effect on transmitted information so as to suppress a peak level of signals.
SOLUTION: After multiplying a complex code series ejsk (Sk=pk2, p is an optional real number not being zero, 0≤k≤N, N is a total carrier number) with an input coded signal, inverse FFT is applied to the product to generate an OFDM modulation signal and it is transmitted. At a receiver side, a complex code series ejsk (Sk is the same as above) is multiplied with a signal resulting from FFT processing to a received signal and an OFDM demodulation signal is obtained. The information relating to the ejsk required for demodulation is included in the input coded information, or sent in advance from the transmitter side to the receiver side through other transmission line. Thus, the reference phases of each carrier of the OFDM are hardly arranged and the level of transmission signals is suppressed and the resulting signal is sent, then an operating point of amplifiers is set higher.

DISH
Exhibit 1003 Page 231

* NOTICES *

JPO and INPIT are not responsible for any
damages caused by the use of this translation.

1.This document has been translated by computer. So the translation may not reflect the original precisely.
2.**** shows the word which can not be translated.
3.In the drawings, any words are not translated.

CLAIMS

[Claim(s)]
[Claim 1]In the transmitting side, it is a complex code sequence to an input encoded signal. [External Character 1]
e^{iS_k}

(-- the signal which they generated the OFDM modulation signal here and transmitted to it as reverse FFT of $S_k=pk^2$, the arbitrary real numbers whose p is not zero, 0 <=k<=N, and the N was carried out after they carried out the multiplication of total number of careers) here, and carried out FFT of the input signal in the receiver -- a complex code sequence [External Character 2]
e^{-iS_k}

A transmission method of an OFDM modulation signal carrying out the multiplication of (S_k is the same here to said S_k), and acquiring an OFDM demodulation signal.
[Claim 2]Said complex code sequence required for an OFDM recovery [in / on a transmission method of the OFDM signal according to claim 1, and / a receiver] [External Character 3]
e^{-iS_k}

the arbitrary real numbers $S_k=pk^2$ and whose p are not zero here. A transmission method of an OFDM modulation signal, wherein 0 <=k<=N and N include the information about the total number of careers in said input encoded signal or transmit it to a receiver beforehand from the transmitting side in transmission lines other than the transmission line for OFDM transmission concerned.
[Claim 3]It is a complex code sequence to an input encoded signal at least. [External Character 4]
e^{iS_k}

(-- the OFDM sending set which $S_k=pk^2$, the arbitrary real numbers whose p is not zero, 0 <=k<=N, and N are provided with the means which carries out the multiplication of total number of careers) here, and is characterized by things.
[Claim 4]It is a complex code sequence to a signal which carried out FFT of the input signal at least. [External Character 5]
e^{-iS_k}

(-- the OFDM receiving set which $S_k=pk^2$, the arbitrary real numbers whose p is not zero, 0 <=k<=N, and N are provided with the means which carries out the multiplication of total number of careers) here, and is characterized by things.
[Claim 5]In a transmission method of an OFDM modulation signal which generates a modulating signal of either BPSKOFDM and a QPSKOFDM modulating signal, and is transmitted, After carrying out the multiplication of two or more constants which make equal amplitude of positive [of a phase which said one of modulating signals can take], and a negative ingredient in an

DISH
Exhibit 1003 Page 232

amplitude peak period of one of said modulating signals according to a value of an input encoded signal, respectively, A transmission method of an OFDM modulation signal characterized by carrying out reverse FFT, generating an OFDM modulation signal, and making it transmit.
[Claim 6]In an OFDM sending set which generates a modulating signal of either BPSKOFDM and a QPSKOFDM modulating signal, and transmits, An OFDM sending set which is provided with a means which carries out the multiplication of two or more constants which make equal amplitude of positive [of a phase which said one of modulating signals can take at least], and a negative ingredient in an amplitude peak period of one of said modulating signals according to a value of an input encoded signal, respectively, and is characterized by things.

[Translation done.]

DISH
Exhibit 1003 Page 233

* NOTICES *

JPO and INPIT are not responsible for any
damages caused by the use of this translation.

1.This document has been translated by computer. So the translation may not reflect the original precisely.
2.**** shows the word which can not be translated.
3.In the drawings, any words are not translated.

DETAILED DESCRIPTION

[Detailed Description of the Invention]
[0001]
[Field of the Invention]In a broadcasting satellite, in order to use the generating electric power by a solar cell, the output of a relay amplifier has restriction, but. This invention, A transmission method and an OFDM sending set of a frequency rectangular cross division multiplex (OFDM:Orthogonal Frequency Division Multiplexing) modulating signal suitable for using it for digital broadcasting in such a satellite system (as opposed to a ground system), etc., It is related with a receiving set.
[0002]
[Problem(s) to be Solved by the Invention]Conventionally, there are phase modulations, such as BPSK and QPSK, in the modulation method of each career of OFDM. In these modulation methods, the reference phase of each career by which multiplex was carried out is constant, and, in the case of BPSK, in the case of a binary and QPSK, the phase which each modulating signal can take is restricted with four value. Therefore, in the phase of each career, by this method, the peak of amplitude may occur on a set or the OFDM time base signal which becomes empty.
[0003]For example, in the relay amplifier for broadcast, while generating electric power and amplifier efficiency have restriction, in order to secure the rate of a service period, and the rate of a place, it is used near the saturation region. In order to secure the rate of a service period, and the rate of a place also in digital broadcasting using an OFDM modulation method, to take the high operating point of an amplifier is desired. However, it is one side, and if the high operating point is taken in this way, in the amplitude peak of an OFDM modulation signal, it will become easy to generate distortion.
[0004]In the situation which has restriction in the above generating electric power and amplifier efficiency, the purpose of this invention is to suppress the amplitude peak of an OFDM signal and to perform little transmission in the high operating point.
[0005]
[Means for Solving the Problem]It is going to control an amplitude peak of a signal by diffusing a reference phase of OFDM each career, or changing amplitude of OFDM each career, without affecting information which should be transmitted in this invention, in order to attain the above-mentioned purpose. In order to make diffusion of these reference phases thru/or change of amplitude perform, in this invention, the multiplication of the specific signal (S) is carried out so that an input encoded signal may not be affected at transmitted data (a case where it amends by a receiver so that it may not be affected is included), OFDM modulation is performed based on it, and each career is transmitted.
[0006]When carrying out signal (S) multiplication and diffusing a reference phase of each career now, a phase of each career becomes difficult to gather and can be transmitted by suppressing a peak of amplitude. In this case, in a receiver, the multiplication of the signal (S^*) corresponding to a signal (S) which carried out multiplication at the above-mentioned transmitting side is carried out to an OFDM demodulation signal, and right information is restored.
[0007]When each career does not have information in amplitude directions, such as BPSK and QPSK, in carrying out the multiplication of the signal (S) at the transmitting side, transmission

DISH
Exhibit 1003 Page 234

which suppressed a signal peak is performed by choosing a signal (S) which carries out multiplication so that amplitude of a career with which phases produce an amplitude peak together, and a career with an ingredient of an opposite phase may be enlarged -- things can be carried out. Here, since multiplication of a signal (S) can be performed only by calculation by a discrete time, it can respond flexibly with software.

[0008]That is, a transmission method of this invention OFDM modulation signal is a complex code sequence to an input encoded signal in the transmitting side. [External Character 6]

e^{jS_k}

(-- a signal which they generated an OFDM modulation signal here and transmitted to it as reverse FFT of $S_k=pk^2$, the arbitrary real numbers whose p is not zero, 0 <=k<=N, and the N was carried out after they carried out the multiplication of total number of careers) here, and carried out FFT of the input signal in a receiver -- a complex code sequence [External Character 7]

e^{-jS_k}

The multiplication of (S_k is the same here to said S_k) is carried out, and the OFDM demodulation signal was acquired.

[0009]Said complex code sequence which needs the transmission method of this invention OFDM modulation signal for the OFDM recovery in a receiver [External Character 8]

e^{-jS_k}

the arbitrary real numbers $S_k=pk^2$ and whose p are not zero here. 0 <=k<=N and N include the information about the total number of careers in said input encoded signal, or transmitted it to the receiver beforehand from the transmitting side in transmission lines other than the transmission line for OFDM transmission concerned.

[0010]this invention OFDM sending set is a complex code sequence to an input encoded signal at least. [External Character 9]

e^{jS_k}

($S_k=pk^2$, the arbitrary real numbers whose p is not zero, 0 <=k<=N, and N are provided with the means which carries out the multiplication of total number of careers) here

[0011]this invention OFDM receiving set is a complex code sequence to the signal which carried out FFT of the input signal at least. [External Character 10]

e^{-jS_k}

($S_k=pk^2$, the arbitrary real numbers whose p is not zero, 0 <=k<=N, and N are provided with the means which carries out the multiplication of total number of careers) here

[0012]A transmission method of this invention OFDM modulation signal, In a transmission method of an OFDM modulation signal which generates a modulating signal of either BPSKOFDM and a QPSKOFDM modulating signal, and is transmitted, After carrying out the multiplication of two or more constants which make equal amplitude of positive [of a phase which said one of modulating signals can take], and a negative ingredient in an amplitude peak period of one of said modulating signals according to a value of an input encoded signal, respectively, Reverse FFT is carried out, an OFDM modulation signal is generated, and it was made to transmit.

[0013]In an OFDM sending set which this invention OFDM sending set generates a modulating signal of either BPSKOFDM and a QPSKOFDM modulating signal, and transmits, It has a means which carries out the multiplication of two or more constants which make equal amplitude of positive [of a phase which said one of modulating signals can take at least], and a negative ingredient in an amplitude peak period of one of said modulating signals according to a value of an input encoded signal, respectively.

[0014]

[Embodiment of the Invention]With reference to an accompanying drawing, this invention is explained in detail based on an embodiment of the invention below. Drawing 1 is a transmission

DISH
Exhibit 1003 Page 235

code series (input encoded signal).
[External Character 11]
$\dot{X}_k$

**** – To the signal which carried out the parallel conversion, it is an example of a numerals system. [External Character 12]
$\dot{S}_k$

(book specification preceding paragraph shows one embodiment of the OFDM sending set by this invention which only carries out the multiplication of (having expressed with S)), and is transmitted. This embodiment is an embodiment which diffuses a phase to BPSKOFDM and controls a signal peak.
[0015]In drawing 1, it is a code sequence as an input encoded signal. [External Character 13]
$\dot{X}_k$

Direct in the serial/parallel conversion machine 1 – Carry out a parallel conversion and it is made a parallel signal, Furthermore, an OFDM modulation signal is acquired from an output terminal of the converter 3 via reverse FFT circuit (Invers Fast Fourier Transform circuit) 2 and the parallel serial change machine 3. It is a process of the usual OFDM modulation signal generation so far (however, when there is no multiplier 4 in drawing 1).
[0016]On the other hand, a code sequence which the multiplier 4 is inserted, respectively between each parallel line between the serial/parallel conversion machine 1 and the reverse FFT (IFFT) circuit 2, and is an input encoded signal as this invention is shown in drawing 1[External Character 14]
$\dot{X}_k$

Code sequence [External Character 15]
$\dot{S}_k$

Multiplication is performed in between and the multiplication result is supplied to reverse FFT circuit 2. The composition of drawing 1 is [in / are an example and / this invention] a code sequence. [External Character 16]
$\dot{X}_k$

It is alike and a code sequence. [External Character 17]
$\dot{S}_k$

What is necessary is just the composition by which multiplication is carried out to ******, and it is not necessary to follow circuit arrangement shown in drawing 1.
[0017]Here, it is an input code sequence. [External Character 18]
$\dot{X}_k$

It is a code sequence of ** and the binary (-either 1 or 1 is taken) of N pieces, and is a code sequence. [External Character 19]
$\dot{S}_k$

********** [External Character 20]
$\dot{X}_k$

A complex code sequence at least for ** to diffuse a phase [External Character 21]
$e^{i S_k}$

DISH
Exhibit 1003 Page 236

It comes out. S_k is a known series beforehand in a receiver, for example, the time delay of each career is proportional to frequency -- as [Equation 1]

$$S_k = p k^2$$

However, the arbitrary real numbers whose p is not zero, 0 <=K<=N, and N are the total numbers of careers.

In this way, the input code sequence of a binary [External Character 22]

$\dot{X}_k$

A compound code sequence for ** and phase diffusion [External Character 23]

$e^{i S_k}$

Multiplication is mutually carried out by the multiplier 4. The OFDM modulation signal by which phase diffusion was carried out as a result of multiplication

[External Character 24]

$\dot{T}_k$

It is obtained by the output terminal of the ** parallel serial converter 3.

[0018]Drawing 2 (a) and (b) is a code sequence (complex code sequence) to the BPSKOFDM modulating-signal generate time mentioned above.

[External Character 25]

$\dot{S}_k$

An example of a constellation of each career of a modulating signal a time (the usual BPSKOFDM) of not carrying out multiplication and when multiplication is carried out by this invention is shown, respectively. Drawing 3 (a) and (b) shows an example of a signal wave form of an OFDM modulation signal corresponding to them, respectively. It turns out that it is transmitted as a signal (drawing 3 (b)) with which a phase of each career becomes difficult to gather compared with a case where phase diffusion of the time base waveform of a signal by which phase diffusion was carried out is not carried out (drawing 2 (b)), and a peak of amplitude was suppressed from drawing 2 and drawing 3.

[0019]A signal which carried out FFT of the input signal with which drawing 4 received a signal (that is, phase diffusion was carried out and transmitted) transmitted by an above-mentioned method

[External Character 26]

$\dot{R}_k$

It is alike and is a complex code sequence. [External Character 27]

$\dot{S}_k^*$

(-- this specification preceding paragraph -- only (S^*) -- a table -- the bottom --) -- carrying out multiplication -- a right received code series [External Character 28]

$\dot{X}_k$

One embodiment of an OFDM receiving set by this invention to restore is shown.

[0020]In drawing 4, it is an input signal.

[External Character 29]

$\dot{R}_k$

Direct in the serial/parallel conversion machine 5 - A parallel conversion is carried out, it is made a parallel signal, and an OFDM recovery is further carried out in FFT circuit 6. It is a complex code sequence to this OFDM demodulation signal to which it restored. [External

DISH
Exhibit 1003 Page 238

Character 30]
$\dot{S}_k^*$

Each multiplier 7 for carrying out multiplication is arranged between FFT circuit (fast Fourier Transform circuit) 6 and the parallel serial conversion circuit 8.
[0021]Complex code sequence [External Character 31]
$\dot{S}_k^*$

It is a complex code sequence at ** and the transmitting side at the time of OFDM modulation.
[External Character 32]
$e^{j S_k}$

The signal with which phase diffusion also of the receiver was carried out since multiplication was carried out and phase diffusion of the modulated wave was carried out will be received, and it is a right received code series as it is. [External Character 33]
$\dot{X}_k$

Specifically at the code sequence for carrying out reverse correction of it becoming impossible to restore, it is a complex code sequence. [External Character 34]
$e^{-j S_k}$

(S_k is a known series beforehand in a receiver, for example, is $S_k=k^2$;, however 0<=K<=N(N: total number of careers)). A code sequence restored eventually [External Character 35]
$\dot{X}_k$

It is a code sequence of 1 or 1 [-] of k **.
[0022]Thereby, it is an input signal.
[External Character 36]
$\dot{R}_k$

FFT is carried out by FFT6 through the ** serial/parallel conversion 5, and it is inputted into the multiplication terminal of the multiplier 7. On the other hand, it is a code sequence of a reverse correction sake about phase diffusion. [External Character 37]
$\dot{S}_k^*$

In ********, it is known beforehand and is inputted into a multiplication terminal of the multiplier 7. In an output multiplier, it is a received code series of a binary (-1, 1). [External Character 38]
$\dot{X}_k$

It ****** and is taken out via the parallel serial converter 8.
[0023]The complex code sequence which is needed above by a receiver for a right OFDM recovery [External Character 39]
$e^{-j S_k}$

It must be transmitted to a receiver in ** and a certain form. This is a complex code sequence.
[External Character 40]
$e^{-j S_k}$

The very thing is not transmitted but information which it can reproduce by a receiver should just be sent. As a transmission method, it is made to contain in an input encoded signal at the transmitting side, and transmits in a transmitted symbol, or may transmit in a transmission line different from it.
[0024]A code sequence used in this invention when performing OFDM modulation and a recovery

DISH
Exhibit 1003 Page 239

by drawing 1 and drawing 4, respectively [External Character 41]

$\dot{S}_k$

[External Character 42]

$\dot{S}_k^*$

** -- a transmission code series a peak is still more apt to break off even if this changes a transmission code series for every symbol by a known method at the transmitting side, and transmits by performing phase diffusion and it is made to carry out reverse correction by a receiver, although it was considered as a regularity (it does not change) thing in time [External Character 43]

$\dot{X}_k$

Being spread is possible.

[0025]In consideration of the case where the amplitude of each career of an OFDM signal has information in the above-mentioned example (actually, in BPSKOFDM of the above-mentioned example, it does not have, but in the case of the multiple value QAMOFDM, it has information), it is the transmitting side and is a complex code sequence. [External Character 44]

$\dot{S}_k$

Since multiplication is carried out, and the topology will be lost if phase diffusion is carried out, in order to recover this, it is a receiver, and it is a complex code sequence. [External Character 45]

$\dot{S}_k^*$

Multiplication was carried out.

[0026]On the other hand, in BPSKOFDM and QPSKOFDM, there is information only in the phase of each career and it does not have information in the amplitude direction of each career. Then, in BPSKOFDM, it is drawing 1, for example. [External Character 46]

$\dot{S}_k$

It carries out and is a transmission code series. [External Character 47]

$\dot{X}_k$

case $N/(2N_1)$ of ** 1, and a case of 1 [-] -- $N/(2N_2)$ -- the multiplication of the constant shall be carried out to a transmission code series (equivalent to an input encoded signal), respectively It is here, and N is symbol length and N_1 and N_2 is in a symbol, respectively.

[External Character 48]

$\dot{X}_k$

It is the number of ** 1 and-1. By carrying out like this, it is a transmission signal.

[External Character 49]

$\dot{T}_k$

Since a size of an ingredient 1, -1 or positive, and negative becomes equal at a ****** peak period, a peak of amplitude can be suppressed and transmitted like the above-mentioned example. In this case, in a receiver, since it does not have information in an amplitude direction of each career, reverse correction of career diffusion for right decoding is not needed.

[0027]

[Effect of the Invention]According to this invention, as explained above, also in the amplifier which has restriction in generating electric power, such as satellite broadcasting, it has the purpose of securing a hour rate and the rate of a place, and even if it makes it operate in the

DISH
Exhibit 1003 Page 240

higher operating point, it becomes possible to carry out little distorted OFDM transmission.

[Translation done.]

DISH
Exhibit 1003 Page 241

(19)日本国特許庁（ＪＰ）　(12) **公開特許公報（Ａ）**　(11)特許出願公開番号

特開平10－84329

(43)公開日　平成10年(1998)３月31日

(51)Int.Cl.[6]	識別記号	庁内整理番号	ＦＩ	技術表示箇所
Ｈ０４Ｊ　11/00			Ｈ０４Ｊ　11/00	Ｚ

審査請求　未請求　請求項の数６　ＯＬ　（全７頁）

(21)出願番号　特願平8－238917

(22)出願日　平成８年(1996)９月10日

(71)出願人　000004352
日本放送協会
東京都渋谷区神南２丁目２番１号

(72)発明者　佐藤　庄衛
東京都世田谷区砧１丁目10番11号　日本放送協会　放送技術研究所内

(72)発明者　斉藤　知弘
東京都世田谷区砧１丁目10番11号　日本放送協会　放送技術研究所内

(72)発明者　森山　繁樹
東京都世田谷区砧１丁目10番11号　日本放送協会　放送技術研究所内

(74)代理人　弁理士　杉村　暁秀　（外３名）

(54)【発明の名称】　ＯＦＤＭ変調信号の伝送方法およびＯＦＤＭ送信装置、受信装置

(57)【要約】　（修正有）

【課題】　ＯＦＤＭ変調方式を用いたディジタル放送において、サービス時間率、場所率を確保するためには増幅器の動作点を高くとると、ＯＦＤＭ変調信号のピークにおいて歪みを発生し易くなる。

【解決手段】　送信側においては、入力符号化信号

$\dot{X}_k$

に複素符号系列

$e^{j S_k}$

（ここに、$S_k = pk^2$，pはゼロでない任意の実数、$0 \leqq k \leqq N$，Nは総キャリア数）を乗算（４）した後逆ＦＦＴ（２）するようにしてＯＦＤＭ変調信号

$\dot{T}_k$

を生成して送信し、受信側においては、受信信号をＦＦＴした信号に複素符号系列

$e^{-j S_k}$

（ここに、S_k は上記S_k に同じ）を乗算してＯＦＤＭ復調出力信号を得るようにした。

DISH
Exhibit 1003 Page 242

1

【特許請求の範囲】

【請求項１】　送信側においては、入力符号化信号に複素符号系列

【外１】

$$e^{jS_k}$$

（ここに、$S_k = pk^2$，pはゼロでない任意の実数、$0 \leqq k \leqq N$，Nは総キャリア数）を乗算した後逆ＦＦＴするようにしてＯＦＤＭ変調信号を生成して送信し、受信側においては、受信信号をＦＦＴした信号に複素符号系列

【外２】

$$e^{-jS_k}$$

（ここに、S_k は前記 S_k に同じ）を乗算してＯＦＤＭ復調信号を得るようにしたことを特徴とするＯＦＤＭ変調信号の伝送方法。

【請求項２】　請求項１記載のＯＦＤＭ信号の伝送方法において、受信側におけるＯＦＤＭ復調のために必要な前記複素符号系列

【外３】

$$e^{-jS_k}$$

（ここに、$S_k = pk^2$，pはゼロでない任意の実数、$0 \leqq k \leqq N$，Nは総キャリア数）に関する情報を、前記入力符号化信号に含ませ、または当該ＯＦＤＭ伝送用伝送路以外の伝送路にて送信側から受信側に予め伝送するようにしたことを特徴とするＯＦＤＭ変調信号の伝送方法。

【請求項３】　少なくとも入力符号化信号に複素符号系列

【外４】

$$e^{jS_k}$$

（ここに、$S_k = pk^2$，pはゼロでない任意の実数、$0 \leqq k \leqq N$，Nは総キャリア数）を乗算する手段を具えてなることを特徴とするＯＦＤＭ送信装置。

【請求項４】　少なくとも受信信号をＦＦＴした信号に複素符号系列

【外５】

$$e^{-jS_k}$$

（ここに、$S_k = pk^2$，pはゼロでない任意の実数、$0 \leqq k \leqq N$，Nは総キャリア数）を乗算する手段を具えてなることを特徴とするＯＦＤＭ受信装置。

【請求項５】　ＢＰＳＫＯＦＤＭおよびＱＰＳＫＯＦＤＭ変調信号のいずれかの変調信号を生成して送信するＯＦＤＭ変調信号の伝送方法において、前記いずれかの変調信号がとりうる位相の正と負の成分の振幅を、前記いずれかの変調信号の振幅ピーク時において等しくするような複数の定数を入力符号化信号の値に応じてそれぞれ乗算した後、逆ＦＦＴしてＯＦＤＭ変調信号を生成して送信するようにしたことを特徴とするＯＦＤＭ変調信号の伝送方法。

【請求項６】　ＢＰＳＫＯＦＤＭおよびＱＰＳＫＯＦＤＭ変調信号のいずれかの変調信号を生成して送信するＯＦＤＭ送信装置において、少なくとも前記いずれかの変調信号がとりうる位相の正と負の成分の振幅を、前記いずれかの変調信号の振幅ピーク時において等しくするような複数の定数を入力符号化信号の値に応じてそれぞれ乗算する手段を具えてなることを特徴とするＯＦＤＭ送信装置。

2

【発明の詳細な説明】

【０００１】

【発明の属する技術分野】放送衛星においては、太陽電池による発生電力を使用するため、中継増幅器の出力に制限があるが、本発明は、そのような衛星系（地上系に対して）でのディジタル放送等に使用するのに適している周波数直交分割多重（ＯＦＤＭ：Orthogonal Frequency Division Multiplexing）変調信号の伝送方法およびＯＦＤＭ送信装置、受信装置に関する。

【０００２】

【発明が解決しようとする課題】従来、ＯＦＤＭの各キャリアの変調方式には、ＢＰＳＫ，ＱＰＳＫなどの位相変調がある。これらの変調方式では多重された各キャリアの基準位相は一定であり、各変調信号のとりうる位相はＢＰＳＫの場合２値、ＱＰＳＫの場合４値と限られている。従って、この方式では各キャリアの位相がそろいやすく、ＯＦＤＭ時間軸信号上に振幅のピークが発生する場合がある。

【０００３】例えば、放送用中継増幅器においては、発生電力、増幅器効率に制限があるなかでサービス時間率、場所率を確保するために飽和領域付近で使用されている。また、ＯＦＤＭ変調方式を用いたディジタル放送においてもサービス時間率、場所率を確保するためには増幅器の動作点を高くとることが望まれる。しかし一方で、このように動作点を高くとると、ＯＦＤＭ変調信号の振幅ピークにおいて歪みを発生し易くなる。

【０００４】本発明の目的は、上記のような発生電力、増幅器効率に制限がある状況において、ＯＦＤＭ信号の振幅ピークを抑え高い動作点で歪みの少ない伝送を行うことにある。

【０００５】

【課題を解決するための手段】上記目的を達成するため、本発明においては、伝送すべき情報に影響を与えることなく、ＯＦＤＭ各キャリアの基準位相を拡散させ、または、ＯＦＤＭ各キャリアの振幅を変化させることによって信号の振幅ピークを抑制しようとするものである。これら基準位相の拡散、ないし振幅の変化を行わせるために、本発明では、入力符号化信号に伝送情報に影響を与えないように（受信側で、影響を与えないように補正する場合を含む）特定の信号（Ｓ）を乗算し、それをもとにＯＦＤＭ変調を行い、各キャリアの伝送を行う。

【０００６】いま、信号（Ｓ）乗算して各キャリアの基

DISH
Exhibit 1003 Page 243

3

準位相を拡散させる場合、各キャリアの位相はそろいにくくなり、振幅のピークを抑えて伝送を行うことができる。この場合、受信側において、上記送信側で乗算した信号（S）に対応した信号（S^*）をＯＦＤＭ復調信号に乗算して正しい情報を復元するようにする。

【０００７】また、各キャリアがＢＰＳＫ，ＱＰＳＫなど振幅方向に情報を持たない場合、送信側で信号（S）を乗算するにあたり、位相がそろって振幅ピークを生じるキャリアと逆位相の成分を持つキャリアの振幅を大きくするように乗算する信号（S）を選ぶことによって、信号ピークを抑えた伝送を行うことできる。ここで、信号（S）の乗算は離散時間での計算だけで行うことができるため、ソフトウェアによって柔軟に対応することができる。

【０００８】すなわち、本発明ＯＦＤＭ変調信号の伝送方法は、送信側においては、入力符号化信号に複素符号系列

【外６】

$$e^{jS_k}$$

（ここに、$S_k = pk^2$，pはゼロでない任意の実数、$0 \leqq k \leqq N$，Nは総キャリア数）を乗算した後逆ＦＦＴするようにしてＯＦＤＭ変調信号を生成して送信し、受信側においては、受信信号をＦＦＴした信号に複素符号系列

【外７】

$$e^{-jS_k}$$

（ここに、S_k は前記 S_k に同じ）を乗算してＯＦＤＭ復調信号を得るようにしたことを特徴とするものである。

【０００９】また、本発明ＯＦＤＭ変調信号の伝送方法は、受信側におけるＯＦＤＭ復調のために必要な前記複素符号系列

【外８】

$$e^{-jS_k}$$

（ここに、$S_k = pk^2$，pはゼロでない任意の実数、$0 \leqq k \leqq N$，Nは総キャリア数）に関する情報を、前記入力符号化信号に含ませ、または当該ＯＦＤＭ伝送用伝送路以外の伝送路にて送信側から受信側に予め伝送するようにしたことを特徴とするものである。

【００１０】また、本発明ＯＦＤＭ送信装置は、少なくとも入力符号化信号に複素符号系列

【外９】

$$e^{jS_k}$$

（ここに、$S_k = pk^2$，pはゼロでない任意の実数、$0 \leqq k \leqq N$，Nは総キャリア数）を乗算する手段を具えてなることを特徴とするものである。

【００１１】また、本発明ＯＦＤＭ受信装置は、少なくとも受信信号をＦＦＴした信号に複素符号系列

【外１０】

$$e^{-jS_k}$$

4

（ここに、$S_k = pk^2$，pはゼロでない任意の実数、$0 \leqq k \leqq N$，Nは総キャリア数）を乗算する手段を具えてなることを特徴とするものである。

【００１２】また、本発明ＯＦＤＭ変調信号の伝送方法は、ＢＰＳＫＯＦＤＭおよびＱＰＳＫＯＦＤＭ変調信号のいずれかの変調信号を生成して送信するＯＦＤＭ変調信号の伝送方法において、前記いずれかの変調信号がとりうる位相の正と負の成分の振幅を、前記いずれかの変調信号の振幅ピーク時において等しくするような複数の定数を入力符号化信号の値に応じてそれぞれ乗算した後、逆ＦＦＴしてＯＦＤＭ変調信号を生成して送信するようにしたことを特徴とするものである。

【００１３】また、本発明ＯＦＤＭ送信装置は、ＢＰＳＫＯＦＤＭおよびＱＰＳＫＯＦＤＭ変調信号のいずれかの変調信号を生成して送信するＯＦＤＭ送信装置において、少なくとも前記いずれかの変調信号がとりうる位相の正と負の成分の振幅を、前記いずれかの変調信号の振幅ピーク時において等しくするような複数の定数を入力符号化信号の値に応じてそれぞれ乗算する手段を具えてなることを特徴とするものである。

【００１４】

【発明の実施の形態】以下に添付図面を参照し、発明の実施の形態に基づいて本発明を詳細に説明する。図１は、送信符号系列（入力符号化信号）

【外１１】

$$\dot{X}_k$$

を直－並列変換した信号に、符号系例

【外１２】

$$\dot{S}_k$$

（本明細書前段では、単に（S）にて表した）を乗算して伝送する本発明によるＯＦＤＭ送信装置の一実施形態を示している。なお、本実施形態は、ＢＰＳＫＯＦＤＭに位相の拡散を行って信号ピークを抑制する実施形態である。

【００１５】図１において、入力符号化信号としての符号系列

【外１３】

$$\dot{X}_k$$

をシリアル－パラレル変換器１において直－並列変換して並列信号にし、さらに逆ＦＦＴ回路（Invers Fast Fourier Transform circuit）２およびパラレル－シリアル変化器３を介して変換器３の出力端子からＯＦＤＭ変調信号が得られる。ここまでは通常のＯＦＤＭ変調信号発生のプロセスである（但し、図１において乗算器４がない場合）。

【００１６】これに対し、本発明においては、図１に示すように、シリアル－パラレル変換器１と逆ＦＦＴ（Ｉ

DISH
Exhibit 1003 Page 244

5

ＦＦＴ）回路２との間の各並列線の間にそれぞれ乗算器４を介挿し、入力符号化信号である符号系列

【外１４】

$$\dot{X}_k$$

と符号系列

【外１５】

$$\dot{S}_k$$

との間で乗算を行い、その乗算結果が逆ＦＦＴ回路２に供給されるようにする。なお、図１の構成は一例であり、本発明においては、符号系列

【外１６】

$$\dot{X}_k$$

に符号系列

【外１７】

$$\dot{S}_k$$

が相互に乗算されるような構成であればよく、図１に示す回路配置に従う必要はない。

【００１７】ここで、入力符号系列

【外１８】

$$\dot{X}_k$$

は、Ｎ個の２値（１，－１のいずれかをとる）の符号系列であり、符号系列

【外１９】

$$\dot{S}_k$$

は符号系列

【外２０】

$$\dot{X}_k$$

の位相を拡散するための複素符号系列

【外２１】

$$e^{jS_k}$$

である。（S_k は受信側で予め既知の系列であり、例えば、各キャリアの遅れ時間が周波数に比例するように、

【数１】

$$S_k = pk^2$$

ただし、ｐはゼロでない任意の実数、$0 \leqq K \leqq N$，Ｎは総キャリア数である。）

こうして、２値の入力符号系列

【外２２】

$$\dot{X}_k$$

は、位相拡散のための複合符号系列

【外２３】

$$e^{jS_k}$$

6

と乗算器４によって相互に乗算される。乗算の結果、位相拡散されたＯＦＤＭ変調信号

【外２４】

$$\dot{T}_k$$

がパラレルーシリアル変換器３の出力端子に得られる。

【００１８】図２（ａ），（ｂ）は、上述したＢＰＳＫＯＦＤＭ変調信号生成時に符号系列（複素符号系列）

【外２５】

$$\dot{S}_k$$

を乗算しない（通常のＢＰＳＫＯＦＤＭ）ときと、本発明によって乗算したときの変調信号の各キャリアのコンスタレーションの一例をそれぞれ示している。また、図３（ａ），（ｂ）は、それらに対応したＯＦＤＭ変調信号の信号波形の一例をそれぞれ示している。図２および図３から、位相拡散された信号の時間軸波形は、位相拡散されない場合に比べ各キャリアの位相がそろいにくくなり（図２（ｂ））、振幅のピークが抑えられた信号（図３（ｂ））として伝送されることが分かる。

【００１９】図４は、上述の方法で送信された（すなわち、位相拡散して送信された）信号を受信した受信信号をＦＦＴした信号

【外２６】

$$\dot{R}_k$$

に複素符号系列

【外２７】

$$\dot{S}_k^*$$

（本明細書前段では、単に（S^*）で表した）を乗算して正しい受信符号系列

【外２８】

$$\dot{X}_k$$

を復元する本発明によるＯＦＤＭ受信装置の一実施形態を示している。

【００２０】図４において、受信信号

【外２９】

$$\dot{R}_k$$

をシリアルーパラレル変換器５において直一並列変換して並列信号にし、さらにＦＦＴ回路６においてＯＦＤＭ復調する。この復調されたＯＦＤＭ復調信号に複素符号系列

【外３０】

$$\dot{S}_k^*$$

を乗算するための各乗算器７がＦＦＴ回路（fast Fourier Transform circuit）６とパラレルーシリアル変換回

DISH
Exhibit 1003 Page 245

7

路８との間に配置される。

【００２１】複素符号系列

【外３１】

$$\dot{S}_k^*$$

は、送信側でＯＦＤＭ変調時に複素符号系列

【外３２】

$$e^{j\theta_k}$$

を乗算し、変調波を位相拡散させたため、受信側でも位相拡散された信号が受信されてしまい、そのままでは正しい受信符号系列

【外３３】

$$\dot{X}_k$$

を復元できなくなるのを逆補正するための符号系列で、具体的には、複素符号系列

【外３４】

$$e^{-j\theta_k}$$

（S_k は受信側で予め既知の系列であり、例えば、$S_k = k^2$ ；ただし$0 \leqq K \leqq N$（Ｎ：総キャリア数））である。また、最終的に復元される符号系列

【外３５】

$$\dot{X}_k$$

はｋ個の１または－１の符号系列である。

【００２２】これにより、受信信号

【外３６】

$$\dot{R}_k$$

はシリアル－パラレル変換５を経てＦＦＴ６によりＦＦＴされ乗算器７の被乗算端子に入力される。一方、位相拡散を逆補正ための符号系列

【外３７】

$$\dot{S}_k^*$$

は受信側において予め既知であり、乗算器７の乗算端子に入力される。乗算器出力には２値（－１，１）の受信符号系列

【外３８】

$$\dot{X}_k$$

が復元され、パラレル－シリアル変換器８を介して取り出される。

【００２３】以上において、正しいＯＦＤＭ復調のために受信側で必要となる複素符号系列

【外３９】

$$e^{-j\theta_k}$$

は、何らかのかたちで受信側に伝送されなければならない。これは複素符号系列

【外４０】

8

$$e^{-j\theta_k}$$

そのものを伝送するのでなく、それが受信側で再現できる情報が送られればよい。伝送方法としては、送信側で入力符号化信号に含ませ、伝送済みのシンボルの中で伝送しておくか、それとは別の伝送路で伝送してもよい。

【００２４】また、図１、図４でそれぞれＯＦＤＭ変調および復調を行う際に本発明において使用する符号系列

【外４１】

$$\dot{S}_k$$

【外４２】

$$\dot{S}_k^*$$

は時間的に一定（変化しない）ものとしたが、これは、送信符号系列を送信側で既知の方法でシンボルごとに変化させ位相拡散を行って伝送し、受信側で逆補正するようにしても、なおピークのたちやすい送信符号系列

【外４３】

$$\dot{X}_k$$

を拡散することが可能である。

【００２５】上述例においては、ＯＦＤＭ信号の各キャリアの振幅が情報をもつ場合を考慮して（実際には、上述例のＢＰＳＫＯＦＤＭの場合はもたないが、多値ＱＡＭＯＦＤＭの場合には情報をもつ）、送信側で複素符号系列

【外４４】

$$\dot{S}_k$$

を乗算して位相拡散させると、その位相情報が失われるため、これを回復させるために受信側で複素符号系列

【外４５】

$$\dot{S}_k^*$$

を乗算した。

【００２６】これに対し、ＢＰＳＫＯＦＤＭ，ＱＰＳＫＯＦＤＭなどでは各キャリアの位相のみに情報があり、各キャリアの振幅方向には情報をもたない。そこで、例えばＢＰＳＫＯＦＤＭの場合、図１の

【外４６】

$$\dot{S}_k$$

として、送信符号系列

【外４７】

$$\dot{X}_k$$

が１の場合Ｎ／（２N_1）、また、－１の場合Ｎ／（２N_2）なる定数をそれぞれ送信符号系列（入力符号化信号に相当）に乗算するものとする。ここで、Ｎはシンボル長、N_1，N_2 はそれぞれシンボル中の

DISH
Exhibit 1003 Page 246

9

【外４８】

$$\dot{X}_k$$

の１，－１の個数である。こうすることにより、伝送信号

【外４９】

$$\dot{T}_k$$

の振幅ピーク時には１と－１あるいは正と負の成分の大きさが等しくなるため、前述例と同様に振幅のピークを抑えて伝送することができる。この場合、受信側では、各キャリアの振幅方向には情報をもたないため、正しい符号復元のためのキャリア拡散の逆補正を必要としない。

【００２７】

【発明の効果】以上説明したように、本発明によれば、衛星放送などの発生電力に制限のある増幅器においても、時間率、場所率を確保する目的をもって、より高い＊

10

＊動作点で動作させても歪の少ないＯＦＤＭ伝送をすることが可能となる。

【図面の簡単な説明】

【図１】本発明によるＯＦＤＭ送信装置の一実施形態を示している。

【図２】従来および本発明によるＯＦＤＭ変調信号の各キャリアのコンスタレーションの一例を示している。

【図３】従来および本発明によるＯＦＤＭ変調信号の信号波形の一例を示している。

【図４】本発明によるＯＦＤＭ受信装置の一実施形態を示している。

【符号の説明】

１，５　シリアル－パラレル変換器
２　逆ＦＦＴ回路
３，８　パラレル－シリアル変換器
４，７　乗算器
６　ＦＦＴ回路

【図１】

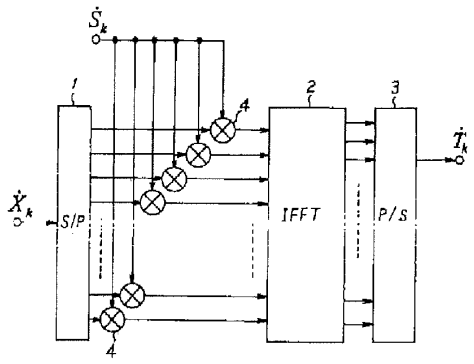

【図２】

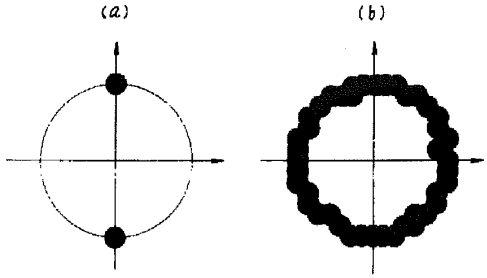

【図４】

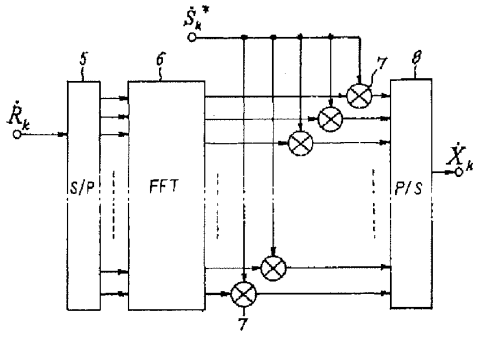

【図3】

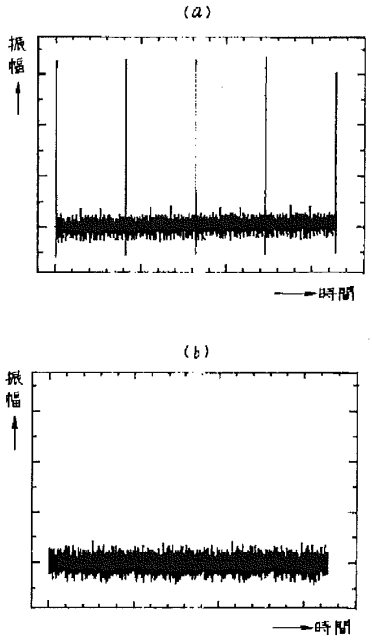

(19) JAPANESE PATENT OFFICE

PATENT ABSTRACTS OF JAPAN

(11) Publication number: **08321820 A**
(43) Date of publication of application: **03.12.1996**

(51) Int. Cl **H04J 11/00**
H04J 1/00

(21) Application number: **07325996**
(22) Date of filing: **14.12.1995**
(30) Priority: **20.12.1994 JP 06316900**
20.03.1995 JP 07 60732

(71) Applicant: **MATSUSHITA ELECTRIC IND CO LTD**
(72) Inventor: **HAYASHINO YUJI**
UNO YASUHIRO
HARADA YASUO
KIMURA TOMOHIRO
OUE YUJI

(54) TRANSMISSION METHOD FOR ORTHOGONAL FREQUENCY DIVISION/ MULTIPLEX SIGNAL AND ITS TRANSMITTER AND/RECEIVER

(57) Abstract:

PURPOSE: To effectively remove waveform distortion occurred in a data component on the frequency axis of respective symbols by means of a multipath and the like at the time of transmitting an OFDM signals.

CONSTITUTION: In a transmission device 1, a complex multiplier 13 complex-multiplies a carrier modulation signal group by a complex number signal group which has a previously decided special pattern and in which the phase changes at random. An inverse Fourier transformer 15 executes inverse Fourier transform against the output of the complex multiplier 13, and transforms a digital signal multiplexed on the frequency axis into the OFDM signal of a time axis. A guard time insertion part 16 adds front guard time to the front parts of the respective symbols of the OFDM signal and rear guard time to rear parts. Data similar to the trailing end part of the corresponding symbol is included in front guard time, and data similar to the front end part of the corresponding symbol is included in rear guard time. The OFDM signals to which front guard time and rear guard time are added are transformed into analog signals and are transmitted to a reception-side. The reception-side executes a processing inverse to a transmission-side and therefore distortion owing to time delay is removed.

COPYRIGHT: (C)1996,JPO

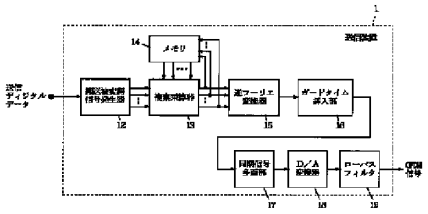

(19)日本国特許庁（ＪＰ）　(12) **公開特許公報（Ａ）**　(11)特許出願公開番号

特開平8－321820

(43)公開日　平成８年(1996)12月３日

(51)Int.Cl.[6]	識別記号	庁内整理番号	ＦＩ	技術表示箇所
Ｈ０４Ｊ　11/00			Ｈ０４Ｊ　11/00	Ｚ
1/00			1/00	

審査請求　未請求　請求項の数12　ＯＬ　（全 14 頁）

(21)出願番号　特願平7－325996

(22)出願日　平成７年(1995)12月14日

(31)優先権主張番号　特願平6－316900
(32)優先日　平６(1994)12月20日
(33)優先権主張国　日本（ＪＰ）
(31)優先権主張番号　特願平7－60732
(32)優先日　平７(1995)３月20日
(33)優先権主張国　日本（ＪＰ）

(71)出願人　000005821
松下電器産業株式会社
大阪府門真市大字門真1006番地
(72)発明者　林野　裕司
大阪府門真市大字門真1006番地　松下電器産業株式会社内
(72)発明者　宇野　矢壽弘
大阪府門真市大字門真1006番地　松下電器産業株式会社内
(72)発明者　原田　泰男
大阪府門真市大字門真1006番地　松下電器産業株式会社内
(74)代理人　弁理士　小笠原　史朗

最終頁に続く

(54)【発明の名称】　直交周波数分割多重信号の伝送方法ならびにその送信装置および受信装置

(57)【要約】

【課題】　ＯＦＤＭ信号を伝送する際に、マルチパス等によって各シンボルの周波数軸上のデータ成分に生じる波形歪みを効果的に除去することである。

【解決手段】　送信装置において、複素乗算器１３は、搬送波変調信号群と、予め定められた特定パターンを有しかつその位相がランダムに変化している複素数信号群とを複素乗算する。逆フーリエ変換器１５は、複素乗算器１３の出力に対して逆フーリエ変換を施し、周波数軸上で多重されたディジタル信号を、時間軸上のＯＦＤＭ信号に変換する。ガードタイム挿入部１６は、ＯＦＤＭ信号の各シンボルの前部に前部ガードタイムを、後部に後部ガードタイムを付加する。前部ガードタイムには対応するシンボルの後端部と同じデータが含められ、後部ガードタイムには対応するシンボルの前端部と同じデータが含められる。前部ガードタイムおよび後部ガードタイムが付加されたＯＦＤＭ信号は、アナログ信号に変換された後、受信側に伝送される。受信側で送信側と逆の処理を行うことにより、時間遅延による歪みが除去される。

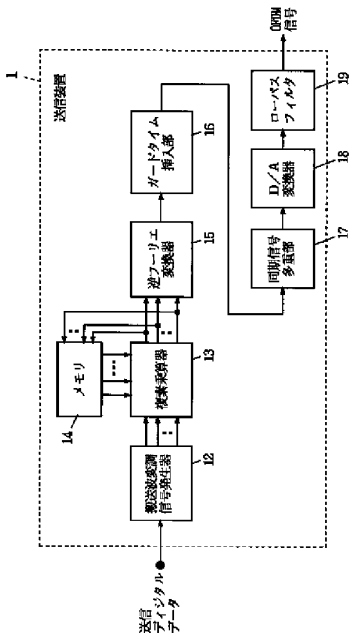

DISH
Exhibit 1003 Page 250

1

【特許請求の範囲】

【請求項１】　有線または無線の伝送路を介し、送信側から受信側に対して、所定長のシンボル毎に直交周波数分割多重信号を伝送する方法であって、

周波数軸上で互いに直交する複数のキャリアの位相と振幅とを決定する搬送波変調信号群をシンボル毎に逆フーリエ変換することにより、時間軸上の前記直交周波数分割多重信号に変換する第１のステップと、

前記直交周波数分割多重信号の各シンボルに対し、その前部にその後端部と同じデータを含む前部ガードタイムを付加するとともに、その後部にその前端部と同じデータを含む後部ガードタイムを付加して、前記受信側に送信する第２のステップとを備える、直交周波数分割多重信号の伝送方法。

【請求項２】　前記搬送波変調信号群と、基準複素数信号群とを周波数軸上で複素乗算する第３のステップをさらに備え、

前記第１のステップは、前記第３のステップで得られた複素乗算結果を、前記直交周波数分割多重信号に変換する、請求項１に記載の直交周波数分割多重信号の伝送方法。

【請求項３】　前記第３のステップは、前記搬送波変調信号群の各シンボルについて、その一定シンボル前に複素乗算した結果を、前記基準複素数信号群として各前記搬送波変調信号群に複素乗算する、請求項２に記載の直交周波数分割多重信号の伝送方法。

【請求項４】　予め定められた特定パターンを有し、かつ各信号の位相がランダムに変化している複素数信号群をシンボル毎に発生する第４のステップをさらに備え、

前記第３のステップは、前記搬送波変調信号群の各シンボルについて、前記第４のステップで得られた複素数信号群を、前記基準複素数信号群として使用し、

前記第１のステップは、常時は前記第３のステップで得られた複素乗算結果を前記直交周波数分割多重信号に変換し、定期的に前記基準複素数信号群を前記直交周波数分割多重信号に変換する、請求項２に記載の直交周波数分割多重信号の伝送方法。

【請求項５】　所定長のシンボル毎に前記送信側から送信されてきた前記直交周波数分割多重信号を、前記搬送波変調信号群に対応する受信搬送波変調信号群に変換する第５のステップと、

前記第５のステップで得られた受信信号群を、所定の基準複素数信号群により、周波数軸上で複素除算する第６のステップとを備える、請求項２に記載の直交周波数分割多重信号の伝送方法。

【請求項６】　有線または無線の伝送路を介し、受信側に、所定長のシンボル毎に直交周波数分割多重信号を送信する装置であって、

基準複素数信号群を記憶するメモリ手段と、

周波数軸上で互いに直交する複数のキャリアの位相と振

2

幅とを決定する搬送波変調信号群と、前記メモリ手段に記憶された前記基準複素数信号群とを周波数軸上で複素乗算し、送信搬送波変調信号群を出力する複素乗算手段と、

前記複素乗算手段から出力される送信搬送波変調信号群に対して、各シンボル毎に逆フーリエ演算を施すことにより、当該送信搬送波変調信号群を、時間軸上の前記直交周波数分割多重信号に変換する逆フーリエ変換手段と、

前記逆フーリエ変換手段から出力される前記直交周波数分割多重信号の各シンボルに対し、その前部にその後端部と同じデータを含む前部ガードタイムを付加するとともに、その後部にその前端部と同じデータを含む後部ガードタイムを付加するガードタイム付加手段と、

前記前部ガードタイムおよび前記後部ガードタイムの付加された前記直交周波数分割多重信号を、各シンボル毎に前記受信側に送信する送信手段とを備える、直交周波数分割多重信号の送信装置。

【請求項７】　前記メモリ手段は、前記複素乗算手段の一定シンボル前の複素乗算結果を、前記基準複素数信号群として記憶する、請求項６に記載の直交周波数分割多重信号の送信装置。

【請求項８】　前記メモリ手段は、予め定められた複素数信号群を、前記基準複素数信号群として記憶し、

前記複素乗算手段は、前記搬送波変調信号群と、前記メモリ手段に記憶された前記基準複素数信号群とを周波数軸上で複素乗算して出力し、

前記逆フーリエ変換手段は、常時はシンボル毎に前記複素乗算手段から出力された複素乗算結果を前記直交周波数分割多重信号に変換し、定期的に前記メモリ手段から出力された前記基準複素数信号群を前記直交周波数分割多重信号に変換する、請求項６に記載の直交周波数分割多重信号の送信装置。

【請求項９】　前記メモリ手段は、前記基準複素数信号群として疑似雑音信号を発生する疑似雑音信号発生手段の出力を保持していることを特徴とする、請求項８に記載の直交周波数分割多重信号の送信装置。

【請求項１０】　前記メモリ手段は、前記基準複素数信号群として周波数掃引信号を発生する周波数掃引信号発生手段の出力を保持していることを特徴とする、請求項８に記載の直交周波数分割多重信号の送信装置。

【請求項１１】　有線または無線の伝送路を介し、送信側から所定長のシンボル毎に送信されてくる直交周波数分割多重信号を受信する装置であって、

時間軸上の前記直交周波数分割多重信号に対して、シンボル毎にフーリエ変換演算を施すことにより、当該直交周波数分割多重信号を、周波数軸上の受信搬送波変調信号群に変換するフーリエ変換手段と、

前記フーリエ変換手段から一定シンボル毎に出力された受信搬送波変調信号群を、受信基準複素数信号群として

DISH
Exhibit 1003 Page 251

3

記憶するメモリ手段と、
前記フーリエ変換手段から出力された受信搬送波変調信号群を、前記メモリ手段に記憶された受信基準複素数信号群により、周波数軸上で複素除算する複素除算手段とを備える、直交周波数分割多重信号の受信装置。
【請求項１２】　有線または無線の伝送路を介し、送信側から受信側に対して、所定長のシンボル毎に直交周波数分割多重信号を伝送する方法であって、
周波数軸上で互いに直交する複数のキャリアの位相と振幅とを決定するための搬送波変調信号群をシンボル毎に生成する第１のステップと、
予め定められた特定パターンを有し、かつ各信号の位相がランダムに変化している複素数信号群を発生する第２のステップと、
前記搬送波変調信号群と前記複素数信号群とをシンボル毎に周波数軸上で複素乗算することにより、当該搬送波変調信号群の各信号の位相をランダム化する第３のステップと、
常時は前記第３のステップで各信号の位相がランダム化された搬送波変調信号群をシンボル毎に逆フーリエ変換して時間軸上の前記直交周波数分割多重信号に変換し、定期的に前記複素数信号群を逆フーリエ変換して前記直交周波数分割多重信号に変換し、それぞれを前記受信側に送信する第４のステップとを備える、直交周波数分割多重信号の伝送方法。
【発明の詳細な説明】
【０００１】
【発明の属する技術分野】本発明は、直交周波数分割多重（Ｏｒｔｈｏｇｏｎａｌ　ＦｒｅｑｕｅｎｃｙＤｉｖｉｓｉｏｎ　Ｍｕｌｔｉｐｌｅｘｉｎｇ；以下、ＯＦＤＭと称す）伝送方法に関し、より特定的には、有線または無線の伝送路を介し、送信側と受信側との間で、所定長のシンボルと当該シンボル間に配置された所定長のガードタイムとを含む直交周波数分割多重信号を用いてデータを伝送する方法に関する。
【０００２】
【従来の技術】周知のごとく、ＯＦＤＭ伝送方式は、符号化したデータを分割して、数百以上の搬送波に振り分け、これを多重して伝送する方式である。近年、移動体向けディジタル音声放送や、地上ディジタルテレビ放送等において、ＯＦＤＭ信号を用いた通信が着目されている。なぜならば、ＯＦＤＭ信号は、多量のデータの高速伝送が可能で、波形等価器なしでも反射波による特性劣化が少なく、その信号波形がランダム雑音に近い形となるので、他のサービスに混信妨害を与えにくい等の特質を有しているからである。
【０００３】このようなＯＦＤＭ信号を用いた伝送方式は、１９９３年１０月１日付け発行のＮＩＫＫＥＩ　ＥＬＥＣＴＲＯＮＩＣＳ　ＢＯＯＫＳ「データ圧縮とディジタル変調」の第２０７～２２２頁において、郵政省，

4

通信総合研究所の福地一により書かれた「数百以上の搬送波を使うＯＦＤＭディジタル放送の移動受信に向く」に開示されている。
【０００４】図１３は上記先行文献に開示された従来のＯＦＤＭ信号の送信装置の構成を示すブロック回路図であり、図１４は図１３の送信装置から送信されるＯＦＤＭ信号の構成を示す図である。図１３において、送信装置５は、直並列変換器５２と、逆フーリエ変換器５３と、並直列変換器５４と、Ｄ／Ａ変換器５５と、ローパスフィルタ５６とを備える。なお、図１４において、（ａ）はＯＦＤＭ信号の直接波を示し、（ｂ）はＯＦＤＭ信号の反射波を示し、（ｃ）はＯＦＤＭ信号の合成波を示し、（ｄ）は時間窓Ｗを示している。
【０００５】送信装置５の直並列変換器５２には、入力シンボル列が供給されている。入力シンボル列は、ディジタル変調された送信データであり、１伝送シンボル中には複数のデータ値が含まれている。なお、ディジタル変調方式としては、ＱＰＳＫ（ｑｕａｄｒｉｐｈａｓｅ　ｐｈａｓｅ　ｓｈｉｆｔ　ｋｅｙｉｎｇ）変調や、１６ＱＡＭ（ｑｕａｄｒａｔｕｒｅ　ａｍｐｌｉｔｕｄｅ　ｍｏｄｕｌａｔｉｏｎ）等が採用される。直並列変換器５２は、入力シンボル列を、１シンボル毎に、直並列変換して、より低速な複数のシンボル列にする。ここでの並列度は、逆フーリエ変換回路５３で使用する複数の搬送波（相互に位相が直交している）の数（数十～数千、たとえば５１２）と同じになる。このような操作により、直並列変換器５２は、逆フーリエ変換回路５３で使用する複数の搬送波のそれぞれの振幅および位相を決定するための搬送波変調信号群を出力する。
【０００６】逆フーリエ変換回路５３は、搬送波変調信号群を、１シンボル毎に、周波数軸上に並ぶ各搬送波に割り当て（これによって、１シンボル分のデータが周波数軸上で多重された信号となる）、これらに対して一括的に逆フーリエ変換を施すことにより、時間軸上の多重信号（この段階では、並列のディジタル信号である）に変換する。
【０００７】並直列変換器５４は、時間軸上の多重信号を並直列変換することにより、離散的なＯＦＤＭ信号を生成する。Ｄ／Ａ変換回路５５は、離散的なＯＦＤＭ信号を、アナログのＯＦＤＭベースバンド信号に変換する。ローパスフィルタ５６は、エイリアシングによるチャネル間干渉が生じないようにするため、ＯＦＤＭベースバンド信号に帯域制限をかける。
【０００８】上記のような一連の操作の結果、送信装置５は、伝送路に対し、図１４に示すようなガードタイム Ｇｍ とシンボル Ｓｍ とを含むＯＦＤＭ信号を出力する。図示しない復調装置は、伝送路を介して受信したＯＦＤＭ信号に対して変調装置５と逆の信号処理を行い、入力シンボル列と同じ出力シンボル列を再生する。
【０００９】

DISH
Exhibit 1003 Page 252

5

【発明が解決しようとする課題】ところで、伝送路上では、いわゆるマルチパスが発生する。このため、受信装置側では、送信装置から送信されてきたＯＦＤＭ信号の直接波と、直接波から時間遅延した反射波とを重なって受信する。シンボルＳｍ を例にとると、直接波（図１４（ａ）参照）にマルチパスによる反射波（図１４（ｂ）参照）が重なった場合、合成波（図１４（ｃ）参照）のシンボルＳｍ の前端部に反射波のガードタイムＧｍ との干渉部αｍ が生じ、ガードタイムＧｍ の前端部に反射波のシンボルＳｍ-1 との干渉部βｍ が生じる。このとき、干渉部βｍ は、時間窓Ｗからはずれているため、シンボルＳｍ のフーリエ変換には影響を及ぼさない。しかしながら、干渉部αｍ は、時間窓Ｗ内に生じ、かつガードタイムＧｍ のデータ成分が「０」であるため、フーリエ変換後の各シンボルＳｍ の周波数軸上のデータ成分に波形歪みを生じるという第１の問題点があった。

【００１０】また、伝送路の遅延特性や、送信側のＤ／Ａ変換器および受信側のＡ／Ｄ変換器のクロックが一致していないことに起因してサンプリングのタイミングにずれが生じる等の理由から、送信装置から受信装置に到達するまでの間に、ＯＦＤＭ信号に時間遅延が発生する。このため、受信装置では、時間窓Ｗを時間軸上で調整する必要があるという第２の問題点もあった。

【００１１】また、直並列変換器５２から出力される搬送波変調信号群は、その位相が相互に異なっているだけでなく、その位相がすべて同一の場合もありうる。例えば、ディジタル音声放送では無音状態を１シンボル期間を超えて送信する場合に、地上ディジタルテレビ放送では一色の映像を１シンボル期間を超えて送信する場合に、搬送波変調信号群の位相がすべて同一になる。また、有音状態を送信する場合や、多色の映像を送信する場合においても、ＱＰＳＫ変調や、１６ＱＡＭ等のようなディジタル変調方式では、位相の異なる信号点の配点数が限られるため、搬送波変調信号群の位相がすべて同一になりやすい。

【００１２】このように、搬送波変調信号群の位相がすべて同一になった場合、この搬送波変調信号群を逆フーリエ変換すると、時間軸上で各搬送波の節が一致し、加算増加箇所が時間軸上で一箇所に集中するため、時間軸上のＯＦＤＭ信号の信号波形がインパルス状になり、電力集中が生じる。この様子を図１５に示す。

【００１３】図１５（ａ）は、相互に直交するｎ本の搬送波をそれぞれ変調するｎ個の搬送波変調信号群の複素平面上での位相がすべて同一の場合を示している。図１５（ｂ）は、図１５（ａ）のｎ個の搬送波変調信号群で変調されたｎ本の搬送波を時間軸上で多重した状態を示している。このように搬送波変調信号群の位相がすべて同一の場合には、ＯＦＤＭ信号は、インパルス状の波形信号になる。なお、図１５（ｃ）は、相互に直交するｎ本の搬送波をそれぞれ変調するｎ個の搬送波変調信号群

6

の複素平面上での位相がランダムな場合を示している。また、図１５（ｄ）は、図１５（ｃ）のｎ個の搬送波変調信号群で変調されたｎ本の搬送波を時間軸上で多重した状態を示している。このように、搬送波変調信号群の位相がすべて異なる場合には、ＯＦＤＭ信号は、時間軸上に平均的に拡散され、ランダム状の波形信号になる。

【００１４】上記のように、搬送波変調信号群の位相がすべて同一になった場合、ＯＦＤＭ信号がインパルス状になり、最大電力が極端に大きくなるため、ＯＦＤＭ信号は、送受信装置や伝送路に含まれる中継増幅器（衛星やＣＡＴＶなど）等の非線形性の影響を受けやすくなるという第３の問題点もあった。この場合、ＯＦＤＭ信号がインパルス状になっても、非線形性の影響を与えないように、送受信装置や中継増幅器等のダイナミックレンジを大きくすることも考えられるが、送受信装置や中継増幅器等が高価になるという別の問題が発生する。

【００１５】それ故に、本発明の目的は、マルチパスにより反射波が直接波に重なった場合でも、フーリエ変換後の各シンボルの周波数軸上のデータ成分に波形歪みを生じないＯＦＤＭ信号の伝送方法ならびにその送信装置および受信装置を提供することである。本発明の他の目的は、送信側から受信側に到達するまでの間に、ＯＦＤＭ信号に時間遅延が発生しても、時間窓の時間軸上での調整が容易なＯＦＤＭ信号の伝送方法ならびにその送信装置および受信装置を提供することである。本発明のさらに他の目的は、安価な構成で、ＯＦＤＭ信号に対する非線形性の影響を軽減したＯＦＤＭ信号の伝送方法ならびにその送信装置および受信装置を提供することである。

【００１６】

【課題を解決するための手段および発明の効果】本発明の第１の局面は、有線または無線の伝送路を介し、送信側から受信側に対して、所定長のシンボル毎に直交周波数分割多重信号を伝送する方法に向けられており、周波数軸上で互いに直交する複数のキャリアの位相と振幅とを決定する搬送波変調信号群をシンボル毎に逆フーリエ変換することにより、時間軸上の直交周波数分割多重信号に変換する第１のステップと、直交周波数分割多重信号の各シンボルに対し、その前部にその後端部と同じデータを含む前部ガードタイムを付加するとともに、その後部にその前端部と同じデータを含む後部ガードタイムを付加して、受信側に送信する第２のステップとを備えている。

【００１７】上記のように、第１の局面では、ＯＦＤＭ信号の各シンボルを送信する際に、各シンボルの前部および後部に、そのシンボルの一部と同じデータを含む前部ガードタイムおよび後部ガードタイムを付加するようにしているので、受信側では、フーリエ変換時における時間窓が受信信号のシンボル区間から多少ずれても、時間軸上に並ぶ１シンボル区間内のすべてのデータ成分を

DISH
Exhibit 1003 Page 253

再生することができる。従って、送信側から受信側に到達するまでの間に、ＯＦＤＭ信号に時間遅延が発生しても、時間窓をシンボル区間に正確に一致させる必要がなくなり、時間窓の時間軸上での調整が容易になる。また、マルチパスにより直接波のシンボル区間と反射波のガードタイムとが重なっても、受信側でフーリエ変換後の周波数軸上に現れる各データ成分の振幅位相歪みは、各シンボル間ですべて一様なものとなる。したがって、簡単な演算処理（乗算、加算等）によって、受信側での１シンボル区間の周波数軸上のデータ成分から、容易にそれらの波形歪みを除去することが可能となる。

【００１８】上記第１の局面において、好ましい実施形態では、搬送波変調信号群と基準複素数信号群とを周波数軸上で複素乗算し、この複素乗算結果をＯＦＤＭ信号に変換して、受信側に伝送するようにしている。また、受信側では、送信側から送信されてきたＯＦＤＭ信号を受信搬送波変調信号群に変換し、この受信搬送波変調信号群を、基準複素数信号群により、周波数軸上で複素除算するようにしている。これによって、送信側と受信側との間でＯＦＤＭ信号に時間遅延が発生しても、受信側で時間遅延の影響のない復調データを得ることができる。

【００１９】なお、搬送波変調信号群に複素乗算される基準複素数信号群としては、搬送波変調信号群の各シンボルについて、その一定シンボル前に複素乗算した結果を用いても良い。

【００２０】また、予め定められた特定パターンを有し、かつ各信号の位相がランダムに変化している複素数信号群を、基準複素数信号群として用いても良い。ただし、この場合、常時は第３のステップで得られた複素乗算結果がＯＦＤＭ信号に変換され、定期的に基準複素数信号群がＯＦＤＭ信号に変換される。これによって、搬送波変調信号群の各信号の絶対基準位相がランダムな値になり、逆フーリエ変換によって得られたＯＦＤＭ信号に電力の時間集中がおこるのを抑制できる。従って、送信装置、受信装置および伝送路のダイナミックレンジを大きくする必要がなく、安価な構成で、送受信器や中継増幅器等の非線形性がＯＦＤＭ信号に与える影響を軽減することができる。

【００２１】本発明の第２の局面は、有線または無線の伝送路を介し、受信側に、所定長のシンボル毎に直交周波数分割多重信号を送信する装置に向けられており、基準複素数信号群を記憶するメモリ手段と、周波数軸上で互いに直交する複数のキャリアの位相と振幅とを決定する搬送波変調信号群と、メモリ手段に記憶された基準複素数信号群とを周波数軸上で複素乗算し、送信搬送波変調信号群を出力する複素乗算手段と、複素乗算手段から出力される送信搬送波変調信号群に対して、各シンボル毎に逆フーリエ演算を施すことにより、当該送信搬送波変調信号群を、時間軸上の直交周波数分割多重信号に変換する逆フーリエ変換手段と、逆フーリエ変換手段から出力される直交周波数分割多重信号の各シンボルに対し、その前部にその後端部と同じデータを含む前部ガードタイムを付加するとともに、その後部にその前端部と同じデータを含む後部ガードタイムを付加するガードタイム付加手段と、前部ガードタイムおよび後部ガードタイムの付加された直交周波数分割多重信号を、各シンボル毎に受信側に送信する送信手段とを備えている。

【００２２】上記第２の局面において、好ましい実施形態では、メモリ手段は、複素乗算手段の一定シンボル前の複素乗算結果を、基準複素数信号群として記憶している。

【００２３】上記第２の局面において、他の好ましい実施形態では、メモリ手段は、予め定められた複素数信号群を、基準複素数信号群として記憶する。また、複素乗算手段は、搬送波変調信号群と、メモリ手段に記憶された基準複素数信号群とを周波数軸上で複素乗算して出力する。さらに、逆フーリエ変換手段は、常時はシンボル毎に複素乗算手段から出力された複素乗算結果を直交周波数分割多重信号に変換し、定期的にメモリ手段から出力された基準複素数信号群を直交周波数分割多重信号に変換する。

【００２４】上記第２の局面において、メモリ手段は、基準複素数信号群として、疑似雑音信号を発生する疑似雑音信号発生手段の出力を保持しても良いし、周波数掃引信号を発生する周波数掃引信号発生手段の出力を保持しても良い。

【００２５】本発明の第３の局面は、有線または無線の伝送路を介し、送信側から所定長のシンボル毎に送信されてくる直交周波数分割多重信号を受信する装置に向けられており、時間軸上の直交周波数分割多重信号に対して、シンボル毎にフーリエ変換演算を施すことにより、当該直交周波数分割多重信号を、周波数軸上の受信搬送波変調信号群に変換するフーリエ変換手段と、フーリエ変換手段から一定シンボル毎に出力された受信搬送波変調信号群を、受信基準複素数信号群として記憶するメモリ手段と、フーリエ変換手段から出力された受信搬送波変調信号群を、メモリ手段に記憶された受信基準複素数信号群により、周波数軸上で複素除算する複素除算手段とを備えている。

【００２６】本発明の第４の局面は、有線または無線の伝送路を介し、送信側から受信側に対して、所定長のシンボル毎に直交周波数分割多重信号を伝送する方法に向けられており、周波数軸上で互いに直交する複数のキャリアの位相と振幅とを決定するための搬送波変調信号群をシンボル毎に生成する第１のステップと、予め定められた特定パターンを有し、かつ各信号の位相がランダムに変化している複素数信号群を発生する第２のステップと、搬送波変調信号群と複素数信号群とをシンボル毎に周波数軸上で複素乗算することにより、当該搬送波変調

DISH
Exhibit 1003 Page 254

9

信号群の各信号の位相をランダム化する第３のステップと、常時は第３のステップで各信号の位相がランダム化された搬送波変調信号群をシンボル毎に逆フーリエ変換して時間軸上の直交周波数分割多重信号に変換し、定期的に複素数信号群を逆フーリエ変換して直交周波数分割多重信号に変換し、それぞれを受信側に送信する第４のステップとを備えている。

【００２７】

【発明の実施の形態】以下、本発明の実施形態に係るＯＦＤＭ信号の伝送方法ならびにその送信装置および受信装置について、図面を参照しながら説明する。

【００２８】図１は本発明の第１の実施形態の送信装置を示すブロック図であり、図２は本発明の第１の実施形態の受信装置の構成を示すブロック図であり、図３は本発明で用いるＯＦＤＭ信号の構成の一例を示す図である。なお、図３において、（ａ）はＯＦＤＭ信号の直接波を示し、（ｂ）はＯＦＤＭ信号の反射波を示し、（ｃ）は時間遅延が生じた場合のＯＦＤＭ信号の直接波を示し、（ｄ）は時間遅延が生じた場合のＯＦＤＭ信号の反射波を示し、（ｅ）は時間窓Ｗを示している。

【００２９】図１の送信装置１と、図２の受信装置２とは、同軸ケーブルや、光ファイバケーブル等の伝送路（図示せず）で接続されている。このような送信装置１および受信装置２は、たとえばディジタルＣＡＴＶシステムにおいて用いられる。送信装置１は、ＯＦＤＭ信号を用い、受信装置２に対して、たとえばテレビの多チャンネル分の映像データを伝送するように構成されている。

【００３０】図１において、送信装置１は、搬送波変調信号発生器１２と、複素乗算器１３と、メモリ１４と、逆フーリエ変換器１５と、ガードタイム挿入部１６と、同期信号多重部１７と、Ｄ／Ａ変換器１８と、ローパスフィルタ１９とを備えている。

【００３１】送信装置１の搬送波変調信号発生器１２には、受信装置２に送信すべき送信ディジタルデータ（ビットストリーム信号）が入力されている。搬送波変調信号発生器１２は、入力された送信ディジタルデータを、ディジタル変調すると共に、１シンボル区間毎に直並列変換し、相互に直交するｎ本（ｎ＝数十～数千、たとえば５１２）の搬送波を変調するためのｎ個の搬送波変調信号を含む搬送波変調信号群に変換する。なお、ディジタル変調方式としては、ＱＰＳＫ変調や、１６ＱＡＭ等が採用される。この段階での搬送波変調信号群は、従来の直並列変換器５２（図１３参照）から出力される搬送波変調信号群と同様である。搬送波変調信号発生器１２から出力される搬送波変調信号群は、複素乗算器１３に与えられる。メモリ１４は、複素乗算器１３から出力される搬送波変調信号群Ｄ’ｍを１シンボル分記憶することができる。また、メモリ１４は、複素乗算器１３に搬送波変調信号群Ｄｍが入力されたときに、内部に記憶している１シンボル前の搬送波変調信号群Ｄ’ｍ-1 を、所定の基準複素数信号群として、複素乗算器１３に出力する。複素乗算器１３は、入力された送信信号群Ｄｍと、１シンボル前の基準複素数信号群Ｄ’ｍ-1 とを、周波数軸上で、複素乗算することにより、搬送波変調信号群

Ｄ’ｍ（Ｄ’ｍ＝Ｄｍ×Ｄ’ｍ-1 ）

を作成する。

10

【００３２】より具体的に説明すると、複素乗算器１３に入力された搬送波変調信号群（ｎ個の搬送波変調信号を含む）のうち、ｋ（ｋ＝１，２，…，ｎ）番目の搬送波変調信号の実数部をＤｍ［ｋ］ｒｅａｌとし、その虚数部をＤｍ［ｋ］ｉｍａｇとし、メモリ１４に記憶したｋ番目の搬送波変調信号の実数部をＤ’ｍ-1［ｋ］ｒｅａｌとし、その虚数部をＤ’ｍ-1［ｋ］ｉｍａｇとした場合、複素乗算器１３は、各搬送波変調信号の実数部および虚数部それぞれについて、乗算処理を行い、

Ｄ’ｍ［ｋ］ｒｅａｌ＝Ｄｍ［ｋ］ｒｅａｌ×Ｄ’ｍ-1［ｋ］ｒｅａｌ

Ｄ’ｍ［ｋ］ｉｍａｇ＝Ｄｍ［ｋ］ｉｍａｇ×Ｄ’ｍ-1［ｋ］ｉｍａｇ

を出力する。メモリ１４は、複素乗算器１３から出力された実数および虚数の搬送波変調信号Ｄ’ｍ（Ｄ’ｍ［ｋ］ｒｅａｌおよびＤ’ｍ［ｋ］ｉｍａｇを含む）を記憶保持する。図４に示すように、メモリ１４および複素乗算器１３は、上記のような動作を繰り返し実行する。

【００３３】逆フーリエ変換器１５は、複素乗算器１３から出力される搬送波変調信号群Ｄ’ｍ中のそれぞれの搬送波変調信号を、シンボル区間毎に、順次周波数軸上に並ぶ各搬送波に割り当て、これらに対して一括的に逆フーリエ変換を施し、さらに並直列変換を行うことにより、周波数軸上で各データ成分が多重された搬送波変調信号群を、時間軸上で各データ成分が多重されたＯＦＤＭ信号Ｄ’ｍtに変換する。

【００３４】ガードタイム挿入部１６は、逆フーリエ変換器１５から出力されるディジタルのＯＦＤＭ信号Ｄ’ｍtを、各シンボル区間毎に、一旦、内部のバッファに蓄える。次に、ガードタイム挿入回路１６は、各シンボルＳｍ に対して、その前部に前部ガードタイムＧｈｍを、その後部に後部ガードタイムＧｅｍを、それぞれ付加する（図３参照）。なお、前部ガードタイムＧｈｍの時間長ｔｇ１および後部ガードタイムＧｅｍの時間長ｔｇ２は、それぞれ伝送路で発生するマルチパスによる直接波と間接波との時間差および送信装置１のＤ／Ａ変換器１８と受信装置２のＡ／Ｄ変換器２２との間のサンプリングのずれによる時間遅延を考慮して定められる。また、前部ガードタイムＧｈｍには、対応するシンボルＳｍ の後端部Ｓｅｍと同じデータＤ’ｅｍｔ が含められ、後部ガードタイムＧｅｍには、対応するシンボルＳｍ の前端部Ｓｈｍと同じデータＤ’ｈｍｔ が含められる。これにより、実質的なシン

DISH
Exhibit 1003 Page 255

11

ボル長が、ｔｇ１＋ｔｓ＋ｔｇ２に延長されることになる。ガードタイム挿入部１６は、前部ガードタイムGhm、シンボルＳm 、後部ガードタイムGemを使用して、データD’emt 、D’m 、D’hmt を順次出力する。

【００３５】同期信号多重部１７は、シンボルの区切りを示すため、シンボル毎に、同期信号を、ガードタイムの付加されたＯＦＤＭ信号に時間軸上で多重し、Ｄ／Ａ変換器１８に出力する。同期信号は、たとえば、図５（ａ）に示すようにＯＦＤＭ信号に対し、周期的に既知の無変調搬送波と抑圧信号等とから構成する。

【００３６】Ｄ／Ａ変換器１８は、同期信号多重部１７から出力される、ガードタイムおよび同期信号が付加されたディジタルデータのＯＦＤＭ信号を、アナログのＯＦＤＭベースバンド信号に変換する。ローパスフィルタ１９は、エイリアシングによるチャネル間干渉が生じないようにするため、ＯＦＤＭベースバンド信号に帯域制限をかける。

【００３７】上記のような一連の操作の結果、送信装置１は、伝送路に対して、ガードタイムおよび同期信号を含むＯＦＤＭ信号を出力する。

【００３８】図２において、受信装置２は、ローパスフィルタ２１と、Ａ／Ｄ変換器２２と、エンベロープ検波器２３と、同期再生部２４と、フーリエ変換器２５と、メモリ２６と、複素除算器２７と、送信データ再生器２８とを備えている。

【００３９】ローパスフィルタ２１は、伝送路を介して受信したＯＦＤＭ信号から、不要な高周波域のスペクトル成分を除去する。

【００４０】ここで、マルチパスや伝送路の遅延特性等による時間遅延Δｔを考慮し、受信装置２において受信したＯＦＤＭ信号をＺD’mtとする。なお、Ｚは、

$$Z=\exp j2\pi fc\Delta t$$

であり、信号の遅延分を表している。

【００４１】Ａ／Ｄ変換器２２は、アナログのＯＦＤＭ信号の前部ガードタイムGhm、シンボルＳm 、後部ガードタイムGemにそれぞれ含まれるデータＺD’emt 、ＺD’mt、ＺD’hmt を、ディジタルのＯＦＤＭ信号に変換する。

【００４２】エンベロープ検波器２３は、ＯＦＤＭ信号をエンベロープ検波することにより、図５（ｂ）に示すエンベロープ検波信号を、シンボル毎に出力する。同期再生部２４は、エンベロープ検波器２３から出力されたエンベロープ検波信号に基づいて、図５（ｃ）に示す基準タイミング信号を、シンボル毎に出力する。この基準タイミング信号は、フーリエ変換器２５およびメモリ２６に入力される。

【００４３】フーリエ変換器２５は、基準タイミング信号に同期して、Ａ／Ｄ変換器２２から出力されるＯＦＤＭ信号を、シンボル長ｔｓと同じ長さの時間窓W（図３（ｅ）参照）を介して覗くことにより、各シンボルの必

12

要なデータ部分だけを抽出する。また、フーリエ変換器２５は、この抽出されたデータ部分に対して、フーリエ変換演算を施すことにより、時間軸上のＯＦＤＭ信号を、周波数軸上の受信搬送波変調信号群に変換する。

【００４４】メモリ２６は、フーリエ変換器２５から出力される受信搬送波変調信号群を、１シンボル分記憶する。ここで、送信装置１からデータD’m が送られてきた場合、メモリ２６には、それに対応するデータとして、データＺD’m が格納されることになる。データＺD’m は、データD’m にマルチパスや伝送路等によって生じた時間遅延分Ｚを加えたものである。すなわち、

$$ZD'm=D'm\times\exp j2\pi fc\Delta t$$

となる。メモリ２６は、基準タイミング信号に同期して、データＺD’m を複素除算器２７に出力する。複素除算器２７は、同期を確立した上で、フーリエ変換器２５から出力されるシンボルＳm+1 のデータＺD’m+1 を、メモリ２６に保持されているデータＺD’m によって複素除算する。すなわち、複素除算器２７は、

$$ZD'm+1\ /ZD'm=D'm+1\ /D'm=Dm+1$$

の演算を行う。図６に示すように、フーリエ変換器２５、メモリ２６および複素除算器２７は、上記のような動作を繰り返し実行する。

【００４５】前述したように、マルチパスに起因して、図３（ａ）に示す直接波と図３（ｂ）に示す反射波との間に、相対的な時間遅延が生じる。また、送信装置１のＤ／Ａ変換器１８と受信装置２のＡ／Ｄ変換器２２とにおけるサンプリングタイミングが異なることに起因して、直接波および反射波にそれぞれ固有の時間遅延が発生する（図３（ｃ）および図３（ｄ）参照）。フーリエ変換器２５において、基準タイミング信号は、これらの時間遅延を考慮していないため、図３（ｅ）に示すように、時間軸上における受信側の時間窓Wの位置は、受信信号のシンボル区間からずれている。

【００４６】しかしながら、受信側のフーリエ変換器２５で、時間窓Wが正確なシンボル区間からずれていても、前部ガードタイムGhmおよび後部ガードタイムGemには、それぞれデータＺD’emt およびＺD’hmt が含まれているため、時間窓Wを介して覗いたデータには、１シンボル区間に本来含まれるべき時間軸上のすべてのデータＺD’mtが含まれていることになる。このため、この時間遅延および反射波の重なりは、周波数軸上において各データ成分毎に一様な振幅位相歪みとなって現れる。また、時間遅延および反射波の特性が一様であれば、各シンボル区間毎に振幅位相歪みの大きさは等しくなる。本実施形態では、複素除算器２７は、フーリエ変換器２５から出力されたシンボルＳm+1 のデータＺD’m+1 を、メモリ２６に保持されているデータＺD’m で複素除算することにより、データの遅延分Ｚをキャンセルし、遅延の無い元の搬送波変調信号群Dm+1 を得ている。すなわち、複素除算器２７が、

DISH
Exhibit 1003 Page 256

13

ＺＤ’ｍ+1 ／ＺＤ’ｍ ＝Ｄ’ｍ+1 ／Ｄ’ｍ ＝Ｄｍ+1

の演算を行うことにより、振幅位相歪みは打ち消されることとなり、各シンボルについて、位相・振幅歪みのないデータＤｍ が得られる。

【００４７】以上のように、上記実施形態では、各シンボルの前後にそのシンボルの後端部および前端部と同じデータを含むガードタイムを付加して送信するようにしているので、受信側では、時間窓W内に直接波および反射波の両方について、時間軸上に並ぶ１シンボル区間内のすべてのデータ成分を再生することができる。このため、マルチパスにより反射波が直接波に重なり、直接波のシンボル区間と反射波のガードタイムとが重なっても、フーリエ変換後に周波数軸上に現れる各データ成分の振幅位相歪みは、すべて一様なものとなる。したがって、送信側および受信側で適当な演算処理（乗算、除算）を実行することで、１シンボル区間の周波数軸上の受信搬送波変調信号群から、容易に波形歪みを除去することができる。

【００４８】また、上記実施形態では、送信側と受信側との間で、ＯＦＤＭ信号に時間遅延が発生しても、周波数軸上で受信搬送波変調信号群を所定の基準複素数信号群で複素乗算、複素除算することにより、時間遅延のない復調データを得ることができる。その結果、時間窓をシンボル区間に正確に一致させる必要がなくなる。

【００４９】送信データ再生器２８は、複素除算器２７から出力された受信搬送波変調信号群Ｄｍ の信号点を複素平面上にマッピングし、信号点を判定することにより、送信装置１の送信ディジタル信号群と同値の受信ディジタル信号群を得る。前述したように、受信搬送波変調信号群Ｄｍ からは、位相歪みや振幅歪みが除去されている。したがって、送信データ再生器２８は、複素平面上へのマッピング位置から、正確かつ容易に元のデータを判定することができる。

【００５０】なお、本願発明者は、計算機を使用して、マルチパスによる遅延波の影響と、時間軸遅延の影響とについて、従来のシステムと本実施形態のシステムとを比較するシミュレーションを行った。なお、このシミュレーションは、キャリア数が５１２本、２５６番目のキャリアのデータだけが振幅「１」，位相「０」、他のキャリアのデータはすべて「０」を条件として実施された。

【００５１】図７は、マルチパスによる遅延波の影響について、従来のシステムと本実施形態のシステムとを比較したシミュレーション結果を示す図である。なお、図７において、（ａ），（ｂ），（ｃ），（ｄ）は、それぞれ、従来のシステムにおける直接波，間接波，合成波，合成波をフーリエ演算することにより周波数軸上の信号に変換した場合のデータ歪みを示している。また、図７において、（ｅ），（ｆ），（ｇ），（ｈ）は、それぞれ、本実施形態のシステムにおける直接波，間接波，合成波，合成波をフーリエ演算することにより周波数軸上の信号に変換した場合のデータ歪みを示している。

14

【００５２】従来のシステムでは、ガードタイムにいかなるデータも挿入されていないため（図７（ｂ）のα１参照）、合成波の時間窓W中に干渉部α２が発生している（図７（ｃ）参照）。したがって、合成波を時間窓Wでフーリエ演算することにより周波数軸上の信号に変換すると、図７（ｄ）に示すように、２５６番目のキャリアのデータのスペクトルが拡がるとともに、他のキャリアの本来「０」であったはずのデータに歪みが生じる。したがって、送信データ再生器２８で誤判定が起き易くなる。さらに、他のキャリアについても、送信データ再生器２８で誤判定が起き易くなる。一方、本実施形態のシステムでは、ガードタイムにデータが挿入されているので、他のキャリアのデータに影響を及ぼさない。

【００５３】図８は、伝送路等による時間遅延の影響について、従来のシステムと本実施形態のシステムとを比較したシミュレーション結果を示す図である。図８において、（ａ）は２５６番目のキャリアのデータだけが振幅「１」，位相「０」の場合のスペクトルを示し、（ｂ）は（ａ）のデータを逆フーリエ演算することにより時間軸上の信号に変換した場合の信号波形を示している。また、図８において、（ｃ），（ｄ）は、それぞれ、従来のシステムにおける時間遅延を生じた合成波，合成波をフーリエ演算することにより周波数軸上の信号に変換した場合のデータ歪みを示している。また、図８において、（ｅ），（ｆ）は、それぞれ、本実施形態のシステムにおける時間遅延を生じた合成波，合成波をフーリエ演算することにより周波数軸上の信号に変換した場合のデータ歪みを示している。

【００５４】従来のシステムでは、ガードタイムにいかなるデータも挿入されていないため（図８（ｃ）のα１参照）、図７（ｃ）の場合と同様に、合成波の時間窓W中に干渉部α２が発生する。したがって、図８（ｄ）に示すように、合成波を時間窓Wでフーリエ演算することにより周波数軸上の信号に変換すると、２５６番目のキャリアのデータのスペクトルが拡がるとともに、他のキャリアの本来「０」であったはずのデータに歪みが生じる。したがって、他のキャリアについても、送信データ再生器２８で誤判定が起こり易くなる。一方、本実施形態では、ガードタイムにデータが挿入されているので、他のキャリアのデータに影響を及ぼさない。

【００５５】図９は、本発明の第２の実施形態の送信装置の構成を示すブロック図である。なお、図９の送信装置３において、図１の送信装置１の構成と対応する部分には、同一の参照番号を付し、その説明を省略する。図９の実施形態で注目すべき点は、メモリ１４が、特定パターン発生器３１の出力、すなわち、予め定められた特定パターンを有し、かつ各信号の位相が相互にランダム

DISH
Exhibit 1003 Page 257

15

に変化している複素数信号群D0 を保持していることである。このような複素数信号群D0 は、たとえば０～１の間のレベルの疑似ランダム信号を発生するＰＮ系列疑似ランダム信号発生器と、この疑似ランダム信号と２πとを乗算する乗算器とを備え、位相が０から２π間でランダムな値を持ち、かつ振幅が１の単位ベクトル信号を生成する疑似雑音信号発生器により形成することができる。また、このような複素数信号群は、位相が０から２πまでのランダムな値を持った既知の周波数掃引信号を発生する、周波数掃引信号発生器により形成することもできる。

【００５６】複素乗算器１３は、各シンボル区間のデータＤm が入力される毎に、データＤm とデータD0 とを周波数軸上で複素乗算して、データＤ’m （Ｄ’m ＝Ｄm ×D0 ）を作成し、搬送波変調信号群中の各搬送波変調信号の相互の位相を特定パターンにランダム化する。

【００５７】図１０は、複素乗算器１３における複素乗算の動作を示す図である。特に、図１０（ａ）は変調方式に１６値ＱＡＭを用いた場合の搬送波変調信号の取り得る信号点配置を示し、図１０（ｂ）は位相がランダムに変化する単位ベクトルｉを示し、図１０（ｃ）は位相を特定パターンにランダム化された搬送波変調信号を示している。

【００５８】図１０（ａ）において、今、一つの搬送波に割り当てられる搬送波変調信号群中の一つの搬送波変調信号が、複素平面上の信号点Ａに配点されたと仮定する。信号点Ａは、その実数部が３、その虚数部が１の大きさを持つ。また、単位ベクトルｉは、この時、位相角３π／４を持ったと仮定する。複素乗算の結果、図１０（ｃ）に示す搬送波変調信号Ａ’が得られる。搬送波変調信号Ａ’は、実数部が－２．８、虚数部が１．４となり、１６値ＱＡＭの配置にはない信号点をとることになる。このように、単位ベクトルｉの位相がランダムに変化するため、搬送波変調信号発生器１２から出力された搬送波変調信号群中の各搬送波変調信号の位相が、たとえ同一であっても、複素乗算器１３は、位相が相互にランダム化された搬送波変調信号群を、逆フーリエ変換器１５に出力する。

【００５９】複素乗算器１３は、このような動作を所定の期間繰り返す。また、複素乗算器１３は、定期的にデータD0 だけを出力する。この時の一連の動作を、図１１に示す。すなわち、データD0 が挿入されるシンボルをS0 とすると、送信装置３は、図１２に示すように、定期的にシンボルS0 のデータD0 を、その他の場合はシンボルSm のデータＤ’m を出力することになる。逆フーリエ変換器１５は、搬送波変調信号群Ｄ’m を、シンボル毎に、周波数軸上に並ぶ各搬送波に割り当て、これらに対して一括的に逆フーリエ変換および並直列変換を施すことにより、ディジタルのＯＦＤＭ信号に変換する。この結果、搬送波変調信号群の絶対基準位相が、０から２πまでのランダムな値になり、逆フーリエ変換器１５から出力されたＯＦＤＭ信号に電力集中が起こるのを抑制できる。したがって、送信装置、受信装置のダイナミックレンジを大きくする必要がなく、安価な構成で、ＯＦＤＭ信号への送受信器や中継増幅器等の非線形性からの影響を軽減することができる。送信装置３における他の回路ブロック、すなわちガードタイム挿入部１６～ローパスフィルタ１９は、送信装置１の場合と同様に動作する。

16

【００６０】なお、ガードタイム挿入部１６は、シンボルSm の場合と同様に、シンボルS0 の後端部と同じデータ成分D0 を対応する前部ガードタイムに挿入するとともに、シンボルS0 の前端部と同じデータ成分を対応する後部ガードタイムに挿入している。

【００６１】図９に示す送信装置３を用いた場合、基本的には、図２に示す受信装置２と同じ構成の受信装置を用いることができる。ただし、受信装置のメモリ２６には、送信装置３のメモリ１４に記憶される基準複素数信号群D0 の受信データＺD0を記憶させることになる。

【００６２】上記した図９の実施形態においても、前述した第１の実施形態と同様の効果が得られる。すなわち、マルチパスにより反射波が直接波に重なり、直接波のシンボル区間と反射波のガードタイムとが重なっても、フーリエ変換後に周波数軸上に現れる受信搬送波変調信号群の振幅位相歪みがすべて一様なものとなり、その除去を簡単な演算処理（乗算、除算）で行える。また、送信側と受信側との間でＯＦＤＭ信号に時間遅延が発生しても、時間遅延の影響のない復調データを得ることができ、時間窓の時間軸上の調整が容易になる。

【００６３】なお、上述の各実施形態は、有線の伝送路を介してデータを伝送するようにしているが、本発明はこれに限定されることなく、無線の伝送路を介してデータを伝送するようにしてもよい。また、上述の各実施形態では、多チャンネル分のテレビの映像データを各搬送波に乗せるようにしたが、１チャンネル分の映像データを時間分割して並列に並び替え、各搬送波に割り当てるようにしてもよい。さらに、映像データに替えて、音声データ、テキストデータ等を各搬送波にのせるようにしてもよい。さらに、ＣＡＴＶに替えて、ＬＡＮ、ＷＡＮ等の他のシステムにおいて本発明を実施してもよい。

【００６４】さらに、図９の送信装置３では、メモリ１４から出力された基準複素数信号群を、定期的に、複素乗算器１３を介して逆フーリエ変換器１５に入力するようにしたが、基準複素数信号群を、逆フーリエ変換器１５に直接入力してもよい。

【００６５】さらに、図９の送信装置３では、搬送波変調信号群に含める基準複素数信号群として、予め定められた特定パターンを有し、かつその位相が相互にランダムに変化している複素数信号群D0 を使用したが、ＯＦＤＭ信号に生じる電力集中が生じないような状況下で

DISH
Exhibit 1003 Page 258

17

は、搬送波変調信号群に含める基準複素数信号群として、予め定められた特定パターンを有し、かつ各信号の位相が相互に同一の複素数信号群を使用しても良い。この場合でも、第１の実施形態と同様、簡単な演算処理（乗算、除算）を行うことで、振幅位相歪みを除去できる。

【図面の簡単な説明】

【図１】本発明の第１の実施形態の送信装置の構成を示すブロック図である。

【図２】本発明の第１の実施形態の受信装置の構成を示すブロック図である。

【図３】図１の送信装置１から送信されるＯＦＤＭ信号の構成を示す図である。

【図４】図１のメモリ１４と、複素乗算器１３との動作を示す図である。

【図５】図１の送信装置１から出力されたＯＦＤＭ信号に対する受信装置２のエンベロープ検波器２３と同期再生部２４との動作を示す図である。

【図６】図２のメモリ２６と、複素除算器２７との動作を示す図である。

【図７】マルチパスによる遅延波の影響について、従来のシステムと第１の実施形態のシステムとを比較したシミュレーション結果を示す図である。

【図８】伝送路等による時間遅延の影響について、従来のシステムと第１の実施形態のシステムとを比較したシミュレーション結果を示す図である。

【図９】本発明の第２の実施形態の送信装置の構成を示すブロック図である。

【図１０】図９の複素乗算器１３における搬送波変調信号群と複素数信号群との複素乗算の様子を示す図である。

18

【図１１】図９のメモリ１４と複素乗算器１３との動作を示す図である。

【図１２】図９のＯＦＤＭ信号の送信装置から送信されるＯＦＤＭ信号の構成を示す信号構成図である。

【図１３】従来のＯＦＤＭ信号の送信装置の構成を示すブロック図である。

【図１４】図１３の送信装置５から送信されるＯＦＤＭ信号の構成を示す図である。

【図１５】相互に直交する搬送波に割り当てられた搬送波変調信号群の位相状態とＯＦＤＭ信号との関係を示す信号波形図である。

【符号の説明】

１，３…送信装置
１２…搬送波変調信号発生器
１３…複素乗算器
１４…メモリ
１５…逆フーリエ変換器
１６…ガードタイム挿入部
１７…同期信号多重部
１８…Ｄ／Ａ変換器
１９…ローパスフィルタ
３１…特定パターン発生器
２…受信装置
２１…ローパスフィルタ
２２…Ａ／Ｄ変換器
２３…エンベロープ検波器
２４…同期再生部
２５…フーリエ変換器
２６…メモリ
２７…複素除算器
２８…送信データ再生器

【図１】

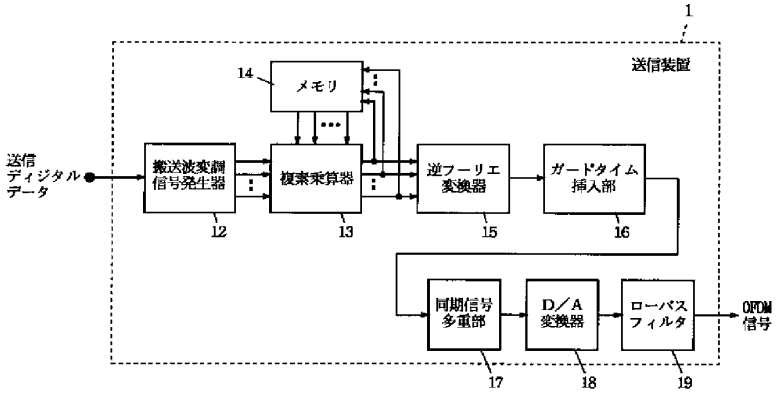

DISH
Exhibit 1003 Page 259

【図２】

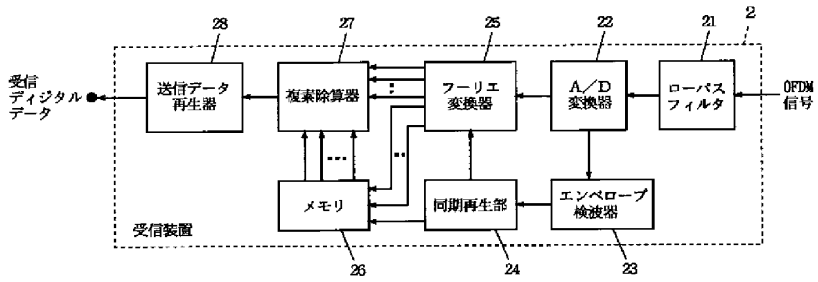

【図３】

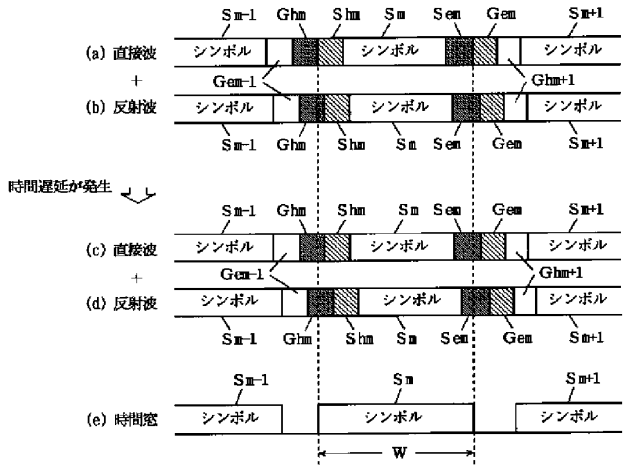

【図４】

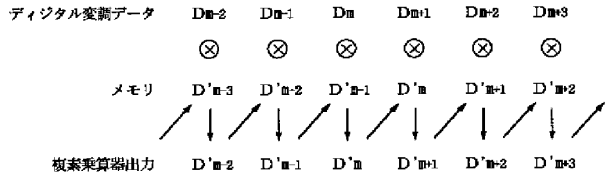

【図６】

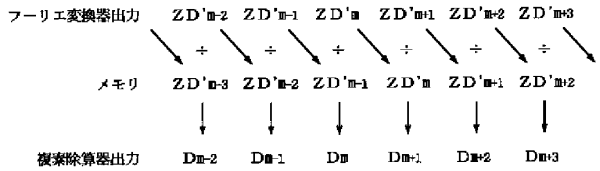

【図１２】

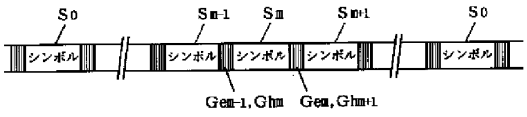

DISH
Exhibit 1003 Page 260

【図５】

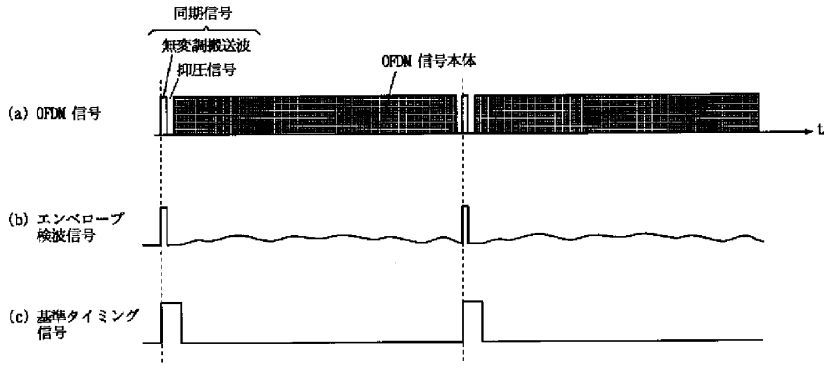

【図７】

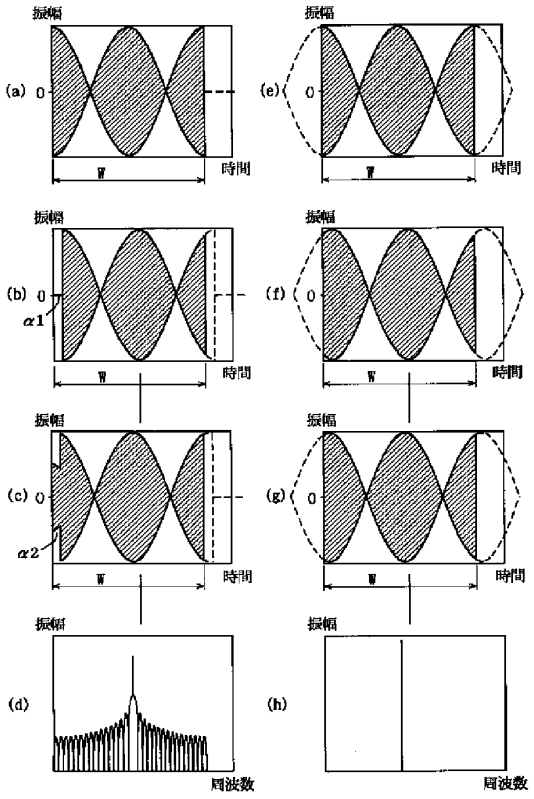

【図８】

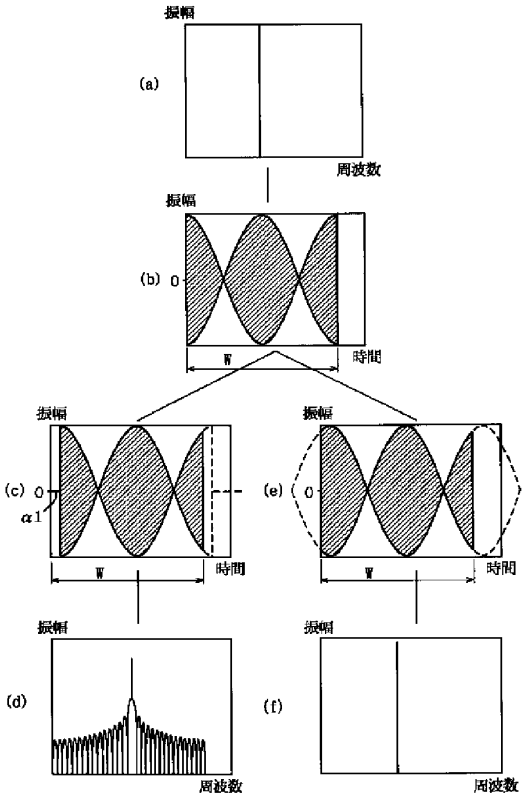

DISH
Exhibit 1003 Page 261

【図９】

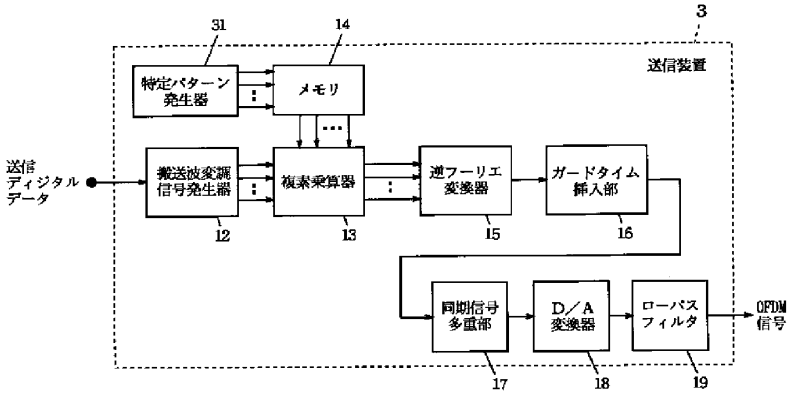

【図１０】

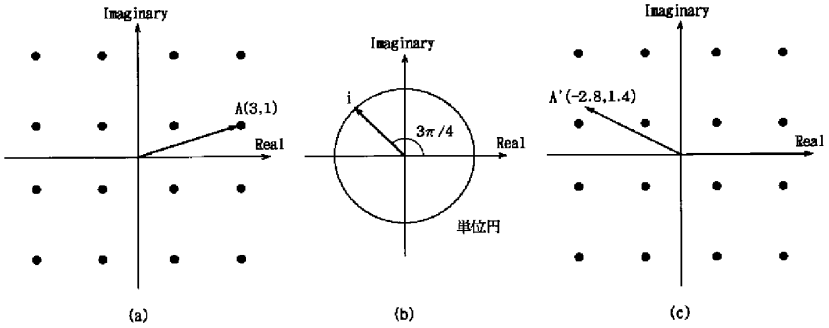

【図１１】

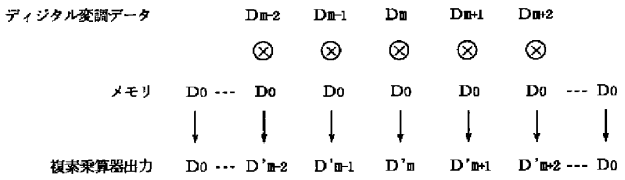

【図１３】

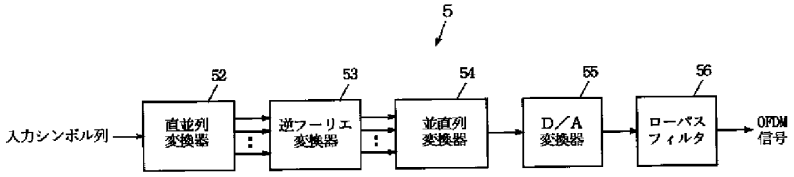

DISH
Exhibit 1003 Page 262

【図１４】

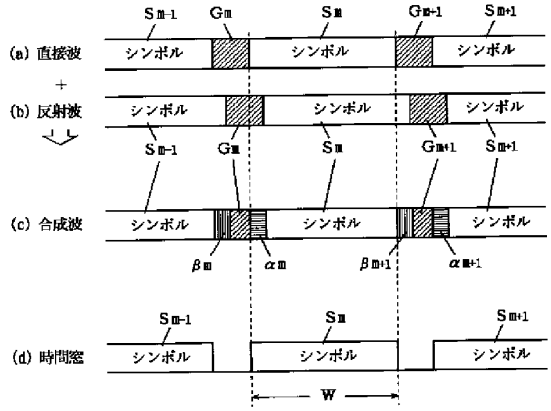

【図１５】

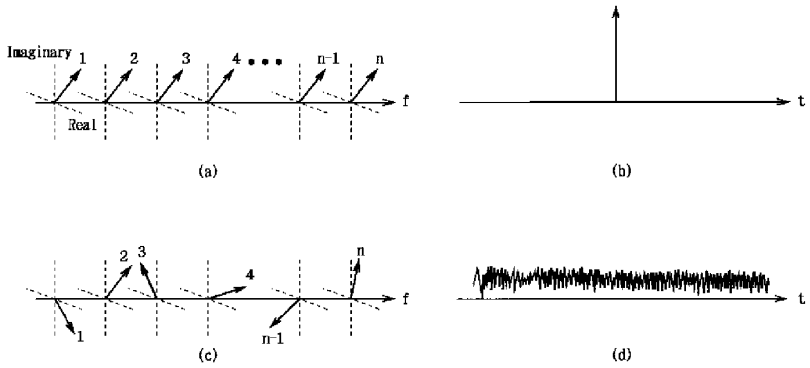

フロントページの続き

(72)発明者　木村　知弘
大阪府門真市大字門真1006番地　松下電器産業株式会社内

(72)発明者　大植　裕司
大阪府門真市大字門真1006番地　松下電器産業株式会社内

DISH
Exhibit 1003 Page 263

PCT WORLD INTELLECTUAL PROPERTY ORGANIZATION
International Bureau

INTERNATIONAL APPLICATION PUBLISHED UNDER THE PATENT COOPERATION TREATY (PCT)

(51) International Patent Classification 6 : G06F	A2	(11) International Publication Number: **WO 98/32065**
		(43) International Publication Date: 23 July 1998 (23.07.98)

(21) International Application Number: PCT/US97/24201

(22) International Filing Date: 31 December 1997 (31.12.97)

(30) Priority Data:
60/033,995 3 January 1997 (03.01.97) US

(71) Applicant: FORTRESS TECHNOLOGIES, INC. [US/US]; Suite 650, 2701 North Rocky Point Drive, Tampa, FL 33607 (US).

(72) Inventors: FRIEDMAN, Aharon; Apartment 4208, 2717 Seville Boulevard, Clearwater, FL 34624 (US). BOZOKI, Eva; Apartment 2113, 6161 North Memorial Highway, Tampa, FL 33615 (US).

(74) Agents: RUBENSTEIN, Kenneth et al.; Meltzer, Lippe, Goldstein, Wolf & Schlissel, P.C., 190 Willis Avenue, Mineola, NY 11501 (US).

(81) Designated States: AL, AU, BA, BB, BG, BR, CA, CN, CU, CZ, EE, GE, HU, IL, IS, JP, KP, KR, LC, LK, LR, LT, LV, MG, MK, MN, MX, NO, NZ, PL, RO, SG, SI, SK, SL, TR, TT, UA, UZ, VN, YU, ZW, ARIPO patent (GH, GM, KE, LS, MW, SD, SZ, UG, ZW), Eurasian patent (AM, AZ, BY, KG, KZ, MD, RU, TJ, TM), European patent (AT, BE, CH, DE, DK, ES, FI, FR, GB, GR, IE, IT, LU, MC, NL, PT, SE), OAPI patent (BF, BJ, CF, CG, CI, CM, GA, GN, ML, MR, NE, SN, TD, TG).

Published
Without international search report and to be republished upon receipt of that report.

(54) Title: IMPROVED NETWORK SECURITY DEVICE

(57) Abstract

A network security device is connected between a protected client and a network. The network security device negotiates a session key with any other protected client. Then, all communications between the two clients are encrypted. The inventive device is self-configuring and locks itself to the IP address of its client. Thus, the client cannot change its IP address once set and therefore cannot emulate the IP address of another client. When a packet is transmitted from the protected host, the security device translates the MAC address of the client to its own MAC address before transmitting the packet into the network. Packets addressed to the host, contain the MAC address of the security device. The security device translates its MAC address to the client's MAC address before transmitting the packet to the client.

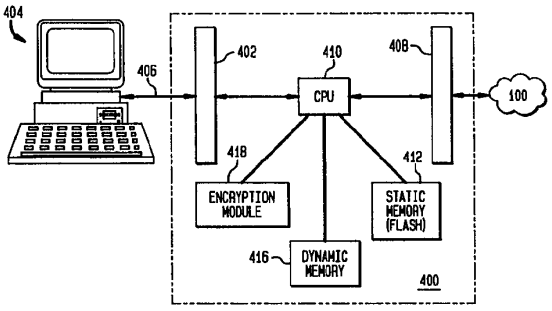

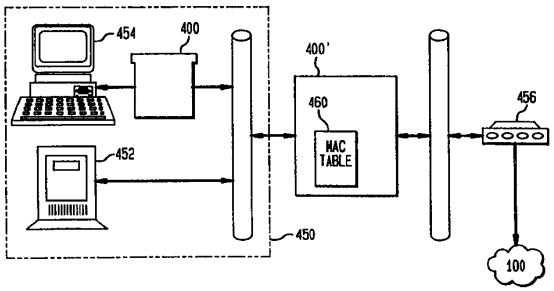

FOR THE PURPOSES OF INFORMATION ONLY

Codes used to identify States party to the PCT on the front pages of pamphlets publishing international applications under the PCT.

AL	Albania	**ES**	Spain	**LS**	Lesotho	**SI**	Slovenia
AM	Armenia	**FI**	Finland	**LT**	Lithuania	**SK**	Slovakia
AT	Austria	**FR**	France	**LU**	Luxembourg	**SN**	Senegal
AU	Australia	**GA**	Gabon	**LV**	Latvia	**SZ**	Swaziland
AZ	Azerbaijan	**GB**	United Kingdom	**MC**	Monaco	**TD**	Chad
BA	Bosnia and Herzegovina	**GE**	Georgia	**MD**	Republic of Moldova	**TG**	Togo
BB	Barbados	**GH**	Ghana	**MG**	Madagascar	**TJ**	Tajikistan
BE	Belgium	**GN**	Guinea	**MK**	The former Yugoslav Republic of Macedonia	**TM**	Turkmenistan
BF	Burkina Faso	**GR**	Greece			**TR**	Turkey
BG	Bulgaria	**HU**	Hungary	**ML**	Mali	**TT**	Trinidad and Tobago
BJ	Benin	**IE**	Ireland	**MN**	Mongolia	**UA**	Ukraine
BR	Brazil	**IL**	Israel	**MR**	Mauritania	**UG**	Uganda
BY	Belarus	**IS**	Iceland	**MW**	Malawi	**US**	United States of America
CA	Canada	**IT**	Italy	**MX**	Mexico	**UZ**	Uzbekistan
CF	Central African Republic	**JP**	Japan	**NE**	Niger	**VN**	Viet Nam
CG	Congo	**KE**	Kenya	**NL**	Netherlands	**YU**	Yugoslavia
CH	Switzerland	**KG**	Kyrgyzstan	**NO**	Norway	**ZW**	Zimbabwe
CI	Côte d'Ivoire	**KP**	Democratic People's Republic of Korea	**NZ**	New Zealand		
CM	Cameroon			**PL**	Poland		
CN	China	**KR**	Republic of Korea	**PT**	Portugal		
CU	Cuba	**KZ**	Kazakstan	**RO**	Romania		
CZ	Czech Republic	**LC**	Saint Lucia	**RU**	Russian Federation		
DE	Germany	**LI**	Liechtenstein	**SD**	Sudan		
DK	Denmark	**LK**	Sri Lanka	**SE**	Sweden		
EE	Estonia	**LR**	Liberia	**SG**	Singapore		

IMPROVED NETWORK SECURITY DEVICE

Related Application

This patent claims the benefit of U.S. Provisional Patent Application Serial Number 60/033,995 entitled "Improved Network Security Device", filed on January 3, 1997 for Dr. Aharon Friedman and Dr. Eva Bozoki. This patent application is directed to improvements in the invention described in U.S. Patent Application Serial No. 08/529,497 entitled "Network Security Device" and filed on September 18, 1995. The contents of these two documents are incorporated herein by reference.

Field of the Invention

The present invention is directed to improvements in a network security device that is connected between a protected computer("the client") and a network and/or a protected local area network (LAN) and a wide area network (WAN) as well as a method for using the network security device.

Background of the Invention

A. Network Architecture

An Internet communications network 100 is depicted in FIG. 1 including five transmit or backbone networks A,B,C,D, and E and three stub networks R, Y, and Z. A "backbone" network is an intermediary network which conveys communicated data from one network to another network. A "stub" network is a terminal or endpoint network from which communicated data may only initially originate or ultimately be received. Each network, such as the stub network R, includes one or more interconnected subnetworks I, J, L, and M. As used herein, the term "subnetwork" refers to a collection of one or more nodes, e.g., (c,w), (d), (a), (b,x,y), (q,v), (r,z), (s,u), (e,f,g),(h,i),(j,k,l),(m,n), and (o,p), interconnected by wires and switches for local internodal communication. Each subnetwork may be a local area network (or "LAN"). Each subnetwork has one or more interconnected nodes which may be host computers ("hosts") u,v,w,x,y,z (indicated by triangles) or routers a,b,c,d,e,f,g,h,i,j,k,l,m,n,o,p,q,r,s (indicated by squares). A host is an endpoint node from which communicated data may initially originate or ultimately

be received. A router is a node which serves solely as an intermediary node between two other nodes; the router receives communicated data from one node and retransmits the data to another node. Collectively, backbone networks, stub networks, subnetworks, and nodes are referred to herein as "Internet systems".

FIG. 2 shows a block diagram of a host or router node 10. As shown, the node may include a CPU 11, a memory 12 and one or more I/O ports (or network interfaces) 13-1, 13-2,. . ., 13-N connected to a bus 14. Illustratively, each I/O port 13-1, 13-2,. . ., 13-N is connected by wires, optical fibers, and/or switches to the I/O port of another node. The I/O ports 13-1, 13-2,. . ., 13-N are for transmitting communicated data in the form of a bitstream organized into one or more packets to another node and for receiving a packet from another node. If the host 10 is a host computer attached to a subnetwork which is an Ethernet, then the host will have an I/O port which is an Ethernet interface.

A host which initially generates a packet for transmission to another node is called the source node and a host which ultimately receives the packet is called a destination node. Communication is achieved by transferring packets via a sequence of nodes including the source node, zero or more intermediary nodes, and the destination node, in a bucket brigade fashion. For example a packet may be communicated from the node w to the node c, to the node d, to the node b, and to the node x.

An exemplary packet 40 is shown in FIG. 3A having a payload 41 which contains communicated data (i.e., user data) and a header 42 which contains control and/or address information. Typically, the header information is arranged in layers including an IP layer and a physical layer.

The IP layer typically includes an IP source address, an IP destination address, a checksum, and a hop count which indicates a number of hops in a multihop network. A physical layer header includes a MAC (Media Access Control)address (hardware address) of the source and a MAC address of the destination.

The user data may include a TCP (Transfer Control Protocol) packet including TCP headers or a UDP (User Data Protocol) packet including UDP headers. These protocols control among other things, the packetizing of

DISH
Exhibit 1003 Page 267

information to be transmitted, the reassembly of received packets into the originally transmitted information, and the scheduling of transmission and reception of packets (see e.g., D. Commer, "Internetworking With TCP/IP", Vol. 1 (1991); D. Commer and D. Stevens, "Internetworking With TCP/IP", Vol. 2 (1991)).

As seen in FIG. 3B, in an exemplary Internet protocol (IP), each node of the Internet 100 is assigned an Internet address (IP address) which is unique over the entire Internet 100 such as the Internet address 30 for the node y shown in FIG. 3B. See, Information Sciences Institute, RFC 791 "Internet Protocol", September, 1981. The IP addresses are assigned in an hierarchical fashion; the Internet (IP) address 30 of each node contains an address portion 31 indicating the network of the node, an address portion 32 indicating a particular subnetwork of the node, and a host portion 33 which identifies a particular host or router and discriminates between the individual nodes within a particular subnetwork.

In an Internet system 100 which uses the IP protocol, the IP addresses of the source and destination nodes are placed in the packet header 42 (see FIG. 3A) by the source node. A node which receives a packet can identify the source and destination nodes by examining these addresses.

In an Internet system, it is the IP address of a destination that is known, and the physical address (i.e., MAC address) to be placed in the MAC frame header is to be determined. If the destination host is on the same local area subnetwork (and this is easily determined by observing that the network part in both the source and destination IP addresses is the same), then the destination address that is to go into the MAC header destination address field is simply the physical address of the destination host. The MAC destination address may be found by means of the ARP (Address Resolution Protocol) which comprises having the source host broadcast an ARP request packet with the IP address of the destination host and having the destination host respond with its hardware (MAC) address. This MAC address may be placed in the MAC frame (physical layer) headers.

B. Encryption Techniques

Eavesdropping in a network, such as the Internet system 100 of FIG. 1, can be thwarted through the use of a message encryption technique. A message

DISH
Exhibit 1003 Page 268

encryption technique employs an encipherment function which utilizes a number referred to as a session key to encipher data (i.e., message content). Only the pair of hosts in communication with each other have knowledge of the session key, so that only the proper hosts, as paired on a particular conversation, can encrypt and decrypt digital signals. Three examples of encipherment functions are (1) the National Bureau of Standards Data Encryption Standard (DES) (see e.g., National Bureau of Standards, "Data Encryption Standard", FIPS-PUB-45, 1977), (2) Fast Encipherment Algorithm (FEAL)(see e.g., Shimizu and S. Miyaguchi, "FEAL-Fast Data Encipherment Algorithm," Systems and Computers in Japan, Vol. 19, No. 7, 1988 and S. Miyaguchi, "The FEAL Cipher Family", Proceedings of CRYPTO '90, Santa Barbara, Calif., Aug., 1990); and (3) International Data Encryption Algorithm ("IDEA") (see e.g., X. Lai, "On the Design and Security of Block Ciphers," ETH Series in Information Processing, v.1, Konstanz: Hartung - Gorre Verlag 1992). One way to use an encipherment function is the electronic codebook technique. In this technique a plain text message m is encrypted to produce the cipher text message c using the encipherment function f by the formula $c = f(m,sk)$ where sk is a session key. The message c can only be decrypted with the knowledge of the session key sk to obtain the plain text message $m = f(c,sk)$.

Session key agreement between two communicating hosts may be achieved using public key cryptography. (See e.g., U.S. Patent Nos. 5,222,140 and 5,299,263).

Before discussing public key cryptographic techniques, it is useful to provide some background information. Most practical modern cryptography is based on two notorious mathematical problems believed (but not proven) to be hard (i.e., not solvable in polynomial time, on the average). The two problems are known as Factorization and Discrete-Log. The Factorization problem is defined as follows:

Input: N, where $N = pq$ where p and q are large prime numbers

Output: p and/or q.

The Discrete-Log problem is defined as follows:

Input: P,g,y, where $y \equiv g^x \bmod P$, and P is a large prime number

Output: x.

(The Discrete-Log problem can be similarly defined with a composite modulus $N = pq$).

Based on the Factorization and Discrete-Log problems, some other problems have been defined which correspond to the cracking problems of a cryptographic system.

One system of such a problem which has previously been exploited in cryptography (see, e.g., H.C. Williams, "A Modification of RSA Public-Key Encryption", IEEE Transactions on Information Theory, Vol. IT-26, No. Nov. 6, 1980) is the Modular Square Root problem, which is defined as follows:

Input: N,y, where $y \equiv x^2 \bmod N$, and $N = pg$, where p and q are large primes

Output: x.

Calculating square roots is easy if p and q are known but hard if p and q are not known. When N is composed of two primes, there are in general four square roots mod N. As used herein, $z \equiv \sqrt{x} \bmod N$ is defined to mean that x is the smallest integer whereby $z^2 \equiv x \bmod N$.

Another problem is known as the Composite Diffie-Hellman (CDH) problem, which is defined as follows:

Input: N, g, $g^x \bmod N$, $g^y \bmod N$, where $N \equiv pq$ and p and q are large primes.

Output: $g^{xy} \bmod N$.

It has been proven mathematically that the Modular Square Root and Composite Diffie-Hellman problems are equally difficult to solve as the above-mentioned factorization problem (see, e.g., M.O. Rabin, "Digitalized Signatures and Public Key Functions as Intractable as Factorization", MIT Laboratory for Computer Science, TR 212, Jan. 1979; Z. Shmuely, "Composite Diffie-Hellman Public Key Generating Schemes Are Hard To Break", Computer Science Department of Technion, Israel, TR 356, Feb. 1985; and K.S. McCurley, "A Key Distribution System Equivalent to Factoring", Journal of Cryptology, Vol. 1, No. 2, 1988, pp. 95-105).

In a typical public-key cryptographic system, each user I has a public key P_i (e.g., a modulus N) and a secret key S_i (e.g., the factors p and q). A message to user I is encrypted using a public operation which makes use of the public key known to everybody (e.g., squaring a number mod N). However, this message is

DISH
Exhibit 1003 Page 270

decrypted using a secret operation (e.g., square root mod N) which makes use of the secret key (e.g., the factors p and q).

C. Network Security Devices

At present, existing network security products are categorized into two classes: (1) firewalls, such as Janus and ANS, and (2) software products, such as encrypted mail, secured http, one time password, etc.

A firewall is a dedicated computer, usually running a Unix operating system. It acts as a filter for incoming and outgoing communications. The firewall is placed as a router between the local area network (LAN) and the outside world. The decision whether to pass a packet is made based on the source and/or destination IP address, and the TCP port number. Some firewalls also have the ability to encrypt data, provided that both sides of the communication employ the same brand of firewall. Some firewalls have a personal authentication feature.

Software products are based on the premise that the computer on which they are installed are secure, and protection is only needed outside on the network. Thus, such software products can easily be bypassed by breaking into the computer. A typical scheme is when an intruder implants a "Trojan Horse" on a computer which sends him an unencrypted copy of every transaction. Sometimes, it is even done as a delayed action during the off-hours when the computer is not likely to be supervised.

In addition, there are authentication products designed to maintain the integrity of the computer against intrusion. These products are based on the premise that the products are 100% secure. Once the product is compromised, it becomes totally ineffective. Sometimes, careless use by one user may jeopardize all other users of the product.

Firewalls are more effective in maintaining network security. However they are very expensive. Their price range is between $10,000 and $50,000, plus the price of the hardware. They require a high level of expertise to install and maintain. The most sophisticated and effective firewalls require a specially trained technician or engineer for their maintenance. The special training cost is up to

$10,000 per person, and the salary adds $60,000 to $120,000 or more per annum to the cost.

Firewalls have to be constantly maintained, modified, and monitored in order to yield reasonable security. They only cover the TCP part of the Internet Protocol and not the UDP part. Thus, they do not provide security to NFS (Network File Services) and many client/server applications.

The firewall is a full service computer which can be logged into for maintenance and monitoring. Thus, it can be broken into. Once a firewall is compromised it loses its effectiveness and becomes a liability rather than a security aid. Firewalls only protect the connection between a LAN and a WAN (Wide Area Network). It does not protect against intrusion into a particular host from within the LAN.

In view of the foregoing, it is an object of the present invention to provide a network security device which overcomes the shortcomings of the prior art network security devices.

It is another object of the present invention to provide a hardware device to provide network security for individual hosts attached to a network.

It is a further object of the present invention to provide a hardware device to provide network security for a local area network connected to a wide area network.

Summary of the Invention

The present invention provides improvements to the Network Security Device described in U.S. Patent Application Serial Number 08/529,497. These improvements include (1) modifications in the device which adapt it to protect a LAN, (2) improved key generation, (3) an improved key exchange algorithm, and (4) improved packet handling procedures which provide double integrity checks.

A preferred embodiment of the inventive network security device comprises a first network interface connected to a protected client, a second network interface connected to a portion of a network, and a processing circuit connected to both interfaces.

DISH
Exhibit 1003 Page 272

A communication from the protected client goes from the client, to the first interface, to the processing circuit, to the second interface and into the network. Similarly, a communication received from the network goes from the second interface, to the processing circuit, to the first interface and to the protected client.

A preferred embodiment of the present invention has four keys associated with it:

(1) a static (permanent) private key;

(2) dynamic (changing) private key;

(3) a static public key; and

(4) a dynamic public key.

In a preferred embodiment, the public keys are exchanged between two network security devices in order to establish a common secret key. The common secret key is the key which is used to encrypt/decrypt all messages between two particular devices. This key should not be transmitted.

The static keys are permanent keys unique to each device. The dynamic keys have a predetermined lifespan and are replaced periodically, such as every 24 hours. Preferably, the static keys are generated using a seed derived from the host's IP address, MAC address of the network interface connected between the protected host and the network security device, and the security device's serial number. Preferably, the dynamic keys are generated using seeds derived from current date and time information.

Packets received from the protected client are encrypted using an encipherment function such as IDEA, FEAL, or DES before being transmitted via the network to a destination. Similarly encrypted packets received from a destination are decrypted. Such encryption and decryption requires a common session key to be possessed jointly by the protected client and the destination (the destination being a protected client of another network security device located someplace else in the network).

The common crypto key (i.e., the common secret key) is obtained using a public key cryptography technique. To aid in the key exchange, the network security device maintains two databases. A static database (SDB) contains

DISH
Exhibit 1003 Page 273

information about secured hosts or nodes in the network. A secured host or node is a host or node that is protected by a network security device. Each entry in the static database contains information about a particular secured host, i.e., the host IP address, time entered in the database, and the host's permanent public key.

A dynamic data base (DDB) contains information about secured and unsecured hosts. Each entry in the dynamic database includes a host's IP address, the time that the host's dynamic key was generated, a flag indicating whether or not the host is secured, a flag indicating whether the host is in transition (i.e., in the middle of a key exchange), and a pointer to a common secret session key.

The protocol used by the network security device of host i to agree on a common crypto key with a network security device of host j is as follows.

Consider a communication from host i to host j. The communication arrives at the network security device of host i from host i. The network security device checks if host j is in the dynamic database. If host j is in the dynamic database, it is determined if the dynamic database has a common crypto key for communication between host i and host j. If there is such a common session key, the communication from host i is encrypted using the common crypto key and transmitted to host j. If there is no common crypto key, then host i sends the dynamic part of its public key P_i to host j and host j replies by sending the dynamic part of its public key P_j to host i. The exchange of dynamic parts of the public keys may be encrypted using the static part of the public keys, which may be obtained from the static databases at host i and host j. The common crypto key is then calculated according to a Diffie-Hellman technique.

Because the dynamic keys of each network security have a particular lifespan, such as 24 hours, there may be a time difference between times when two device's keys expire. Thus, it is possible that one device's dynamic key may expire before the packet is received. One way to prevent this occurrence is to take into account this time difference. The DDB may correct the time difference between the time the packet was sent and the time the packet is received. Also, the DDB time generation entry indicates to the network security device when the other party's dynamic key expires. Thus, when a communication between the

DISH
Exhibit 1003 Page 274

nodes is initiated, it may be determined whether a new dynamic key exchange is warranted, rather than attempting to use an expired common dynamic key.

Note that this assumes that there is an entry for host j in the static database of host i. If there is not, the exchange of dynamic public keys is preceded by an exchange of static public keys and the forming of a database entry for host j in the static database at host I. Moreover, if there is no entry for host j in the dynamic database of host I, such an entry will be generated before the dynamic key exchange.

A packet received by the network security device and the connected host is preferably processed in the following manner. The IP and MAC headers from the packet are copied into a new IP packet. The client host's physical address (e.g., the MAC address of the network interface between the client and the network security device) is replaced with the network security device's MAC address (e.g., the MAC address of the network interface between the network security device and the network). The new IP packet includes a proprietary header and proprietary tail. Information about the packet is stored in the proprietary tail, including check sum information. The data and proprietary tail are then encrypted. The proprietary header is then filled in, including check sum information for the encrypted data. This packet is then transmitted into the network.

This processing method provides a double integrity check. The check sum which was calculated after encryption is checked by the receiver before decryption, providing an integrity test of the encrypted data in transit. The check sum in the proprietary tail was calculated before encryption and checked by the received after decryption. This checksum provides a means of strong authentication because the static and dynamic keys used to encrypt the checksum are known only to the two communicating hosts. This check sum will differ if the common secret key is not identical on both sides and also provides an integrity test of the actual data. Note that if the check sum is replaced with a secured hash function, after the packet is encrypted, it becomes a digital signature. It should be noted that encryption takes place at the IP level so that TCP and UDP packets are encoded.

DISH
Exhibit 1003 Page 275

In short, the inventive network security device has a number of significant advantages.

Like a firewall, the inventive network security device is a hardware/software combination in a preferred implementation. However, it is a sealed "box" and cannot be logged into. Hence, it cannot be compromised the way a firewall can. It is much cheaper than a firewall. Thus, each node in the LAN can be equipped with it. This way, it provides protection inside the LAN as well as outside. The network security device works directly at the IP level. It therefore, covers all types of IP protocols and requires no special configuration to different network applications. Thus, the inventive network security device is maintenance free.

Brief Description of the Drawings

The present invention is described with reference to the following figures:

FIG. 1 schematically illustrates an Internet system.

FIG. 2 schematically illustrates the architecture of a host in the network of FIG. 1.

FIGs. 3A and 3B illustrate the format of a packet transmitted in the network of FIG. 1.

FIG. 4A illustrates a network security device for use with a host in the network of FIG. 1 in accordance with an embodiment of the present invention.

FIG. 4B illustrates a network security device for use with a LAN in accordance with an embodiment of the present invention.

FIG. 5 illustrates an entry in a static database maintained by the network security device of FIG. 4.

FIG. 6 illustrates an entry in a dynamic database maintained by the network security device of FIG. 4.

FIG. 7 is a flow chart illustrating an activation method used by the network security device of FIG. 4.

FIG. 8 is a flowchart illustrating a key exchange method used by the network security device of FIG. 4.

FIG. 9 is a flow chart illustrating an IP packet handling algorithm utilized by the network security device of FIG. 4.

DISH
Exhibit 1003 Page 276

FIG. 10 illustrates an IP packet received from a connected host by the network security device and an IP packet transmitted from the network security device into a network.

FIG. 11 is a flowchart illustrating a method of processing the packets of FIG. 10.

Detailed Description of the Invention

Overview of the Invention

FIG. 4A schematically illustrates a network security device for protecting a host according to an embodiment of the invention. The security device 400 comprises a first interface 402 which is connected to the client host 404. Specifically, the interface 402 is connected to a network interface in the client host 404 (e.g., an interface 13 of Fig. 2) via a cable or wire 406. The security device 400 comprises a second interface 408 which is connected to a portion of a network 100. Illustratively, the interface 408 is connected to an Ethernet so that the interfaces 402, 408 are Ethernet interfaces such as SMC Elite Ultra Interfaces.

FIG. 4B schematically illustrates a network security device 400' for protecting a LAN according to an embodiment of the invention. As seen in FIG. 4B, a network security device 400' according to the invention is connected between a LAN 450, such as an Ethernet network (including, for example, a file server 452 and a workstation 454), and a router 456 which routes communications between the LAN 450 and a WAN 100, such as the Internet. As discussed in detail below, several modifications are made in the Network Security Device to adapt it for use in protecting a LAN. As also seen in FIG. 4B, network security devices may be arranged in a cascaded topology. Note that workstation 454 is associated with a network security device 400.

Returning to FIG. 4A, a CPU 410 is connected to the interfaces 402, 408. The CPU is, for example, an Intel 486 DX 62-66 or Pentium. Alternatively, the processing circuit may be implemented as one or more ASICs (Application Specific Integrated Circuits) or a combination of ASICs and a CPU. A static memory 412 (e.g., flash EEPROM) is also connected to the CPU 410 and a dynamic memory

DISH
Exhibit 1003 Page 277

416 (e.g., RAM) is connected to the CPU 410. An optional encryption module 418 may be provided to perform encryption and large number arithmetic operations. The encryption unit may be implemented as a programmable logic array. Alternatively, the encryption module 418 may be omitted and its function may be carried out using a software program which is executed by the CPU 410. However, because certain encryption functions are calculation intensive, it may be preferable to separate the encryption functions from other functions of the Network Security Device 400.

The software executed by the CPU 11 preferably has three components: (1) operating system, (2) networking system, and
(3) key computation algorithms. The operating system and the networking system may both be part of a Unix-like kernel. The key computation algorithms reside in memory and are signaled into action by the networking system. The operating system is a lobotomized Linux system with all drivers taken out except the RAM, disk, and Ethernet interfaces. The networking system is for communication, key exchange, encryption, configuration, etc. In a preferred embodiment, the key computation software may run independently of the other software. This shifts the computationally intensive task of key computation away from the operating system and networking system.

The CPU 410 maintains two databases. One database is a static database (SDB) 412 preferably stored in a permanent memory, such as a Flash ROM 412. FIG. 5 illustrates one entry in the SDB 412. The SDB may have an entry for the client host as well as other hosts. As seen in FIG. 5, the static database entry 500 contains permanent information about the network security device 400 and other secured nodes in the network. The static database entry 500 may include the following information about another secured node: the other node's IP address 502, time that this other node was entered into the database 504, the node's permanent public key 506, and a pointer to the static common key shared by the network security device 400 and the other node's device 508. The static database 500 may also contain the IP address and the serial number of the connected host 510.

DISH
Exhibit 1003 Page 278

A second database is a dynamic database (DDB) 416, which may be stored in a volatile memory, such as a RAM. FIG. 6 illustrates one entry in the DDB 416. As seen in FIG. 6, the dynamic database entry 600 contains information about secured and unsecured nodes, i.e., the other node's IP address 602, the time a last packet was sent from that other node 604, a time the other node's dynamic key was generated 606, a pointer to a common secret key shared with that node, time last updated, a secured flag indicating whether the node is secured (e.g.,has its own network security device) 602, and a transition flag indicating whether the node is in transition (i.e., in the middle of a key exchange).

Briefly, a preferred embodiment of the present invention operates in the following manner. The interface 402 is put in a promiscuous mode. In this mode, the interface 402 passes all communications from the client host 404 that are sensed on the cable 406 to the CPU 410. The network connection is via the interface 408 which is set to the same IP address as the client 404. The network security device 400 responds to the Address Resolution Protocol by sending its own (rather than the client's) MAC address. This adds a level of security by blocking attempts to bypass the device 400 using the Ethernet protocol.

Received communications are checked to see if they are from a secured host. First, the DDB entry 600 is checked to determine if there is a current dynamic common key shared with the node sending the communication. If yes, this key is used to encrypt and decrypt subsequent packets. If no, if these nodes have communicated previously, a dynamic key exchange is performed. If it is the first time these nodes have communicated, a static key exchange is performed to obtain a static dynamic key. This static key is used to encrypt and decrypt the dynamic key exchange communications.

Activation and Initialization

In a preferred embodiment, the network security device 400 is a sealed box which cannot be logged into. The network security device 400 senses the IP (and/or MAC) address of the client host 404 and locks itself to it. Once the network security device is locked to the address, the client 404 is prevented by the network security device 400 from changing its IP (and/or MAC) address.

DISH
Exhibit 1003 Page 279

Preferably, before the network security device 400 is placed into service, it is activated. The role of activation is to allow or disallow burning the host's 404 IP address into an entry 500 in the static database 412. As discussed above, the SDB 412 may have an entry 500 for the connected client host.

The network security device's serial number (element 510) and the time of activation (element 504) may also be burned into the static database entry 500. As discussed below, these values may be used to generate a seed for the network security device's static private key.

FIG. 7 is a flowchart 700 illustrating a preferred activation method. First, an "activation packet" containing an activation string in the payload may be sent from a connected computer, such as a host 404, through the network security device 400 (step 702). The packet is received by the device 400, which determines whether it has been activated (step 704). If it has not been activated, the IP address and other information are written into the flash memory (step 706), as described above, and an acknowledgment packet is returned to the computer (step 708). The device 400 may also generate a confirmation message for display on a monitor of the connected computer (step 710). The Address Resolution Protocol (ARP) is the protocol which is used to resolve an IP address into a matching Ethernet machine (MAC) address which is the actual address to which the network interface responds. As discussed above, the inventive network security device uses ARP (Address Resolution Protocol) to configure itself and hide the client host. The manner in which the network security device processes an ARP request is described in related application Serial No. 08/529,497, the contents of this description are incorporated herein by reference.

Key Calculation

A preferred embodiment of the present invention has four keys associated with it:

(1) a static (permanent) private key;

(2) dynamic (changing) private key;

(3) a static public key; and

(4) a dynamic public key.

DISH
Exhibit 1003 Page 280

In a preferred embodiment, the private keys are 128 bits long and are known only to that network security device. In a preferred embodiment, the public keys are 512 bits long and are revealed to others. Public keys, as described above, are exchanged between two network security devices in order to establish a 128 bit long common secret key. The common secret key is the key which is used to encrypt/decrypt all messages between two particular devices. The common secret keys should never be transmitted.

In a preferred embodiment, the keys are generated when the device 400 is turned on. As described in detail below, the static keys are permanent keys unique to each device and the dynamic keys have a predetermined lifespan and are replaced periodically, such as every 24 hours.

Static Keys

Keys are generated using a "seed", or number, which is then processed to generate a key. The seed for a randomly generated static private key for a particular network security device 400 is derived from the device's IP-address, MAC-address, serial number, and a time-stamp. The seed may be determined in the following manner:

$$seed = IP + MAC_l + MAC_h + serial + time$$

where:

MAC_l is the low four bytes of the device's six byte MAC address;

MAC_h is the high two bytes of the MAC address.

Using this seed, a private key (preferably 128 bits long), is then randomly generated using a random number generator, such as the GNU Multiple Precision library copyrighted by Free Software Foundation Inc. (1996), Boston, Massachusetts, 02111. If the box is non-activated, the seed is the present time, thus it will be different every time the box is turned-on. On the other hand, for activated boxes, the static private key is a property of the box, it will not change by turning the box on/off.

Dynamic Keys

The dynamic private key is randomly generated at predetermined intervals. For example, dynamic keys may be generated every 24 hours. Preferably, the dynamic keys are derived from a random seed obtained from seconds, minutes,

DISH
Exhibit 1003 Page 281

and hours of the present time. The dynamic secret key may be processed from the seed using a random number generator, such as the GNU Multiple Precision library

Public Keys

The static and dynamic public keys are calculated from the private keys according to the equation:

$$X_i \equiv q^{x_i} \pmod{n}$$

where:

X_i is the public key;

x_i is the private key;

and q and n prime numbers which are preferably installed in each network security device.

Key Exchanges

The first time a client 404 or LAN 450 sends a message to another network security device, a protocol is executed by which the two devices (i) exchange static public keys (unencrypted), (ii) generate a static common key, and then (iii) exchange dynamic public keys encrypted with their static common key. FIG. 8 is a flowchart 800, illustrating the key exchange algorithm.

Consider the case where the host client wants to send a communication to a node in the network whose IP = A. When the communication arrives at the network security device of the host client the dynamic data base 416 (DDB) is checked to determine if there is an entry 600 for node A in the dynamic data base (step 702).

Note that the DDB includes an entry for a "secured" flag 612 and a "transition" flag 614. The secured flag indicates the current security status between the two network security devices. Preferably, the secured flag may be in one of five states:

0 = unsecured

1 = secured

2 = other party was secured, but now does not respond to dynamic key exchange request (i.e., other party has an entry in the SDB 500 but no current entry in the DDB 600)

DISH
Exhibit 1003 Page 282

3 = the device's dynamic key has expired and must renegotiate all dynamic keys

4 = cannot allocate key storage for the other party's key

The transition flag 614 indicates the status of a key exchange. Preferably, the transition flag maybe in one of four states:

0 not in transition

$i \leq N$ waiting to receive a dynamic public key packet

$N + 2$ waiting for a dynamic common key calculation

$-i \geq -N$ waiting for static public key packet

$-(N + 2)$ waiting for a static common key calculation

where N is the maximum number of tries, and i is the actual number of tries. As discussed in detail below, if there is no entry 600 in the DDB 416, the SDB 412 is searched for an entry 500 corresponding to node A.

The database searches return:

(i) a transition flag; and

(ii) and a reference to the entry number in the database.

The "transition" and "secured" flags in the DDB may then be set accordingly. The following table sets out possible outcomes of a DDB/SDB search.

Possible Outcomes of Database Search.

	Need dynamic key	Need static key have nothing to decrypt with	Not asking for any key	Comments
Trans	1	-1	0	

DISH
Exhibit 1003 Page 283

	Need dynamic key	Need static key have nothing to decrypt with	Not asking for any key	Comments
Return	0	0	0	have nothing to en/decrypt with (no entry in DDB)
	-(i + 1)		-(i + 1)	use st-key to en/decrypt
			+ (i + 1)	use dyn-key to en/decrypt
			-(DB size + i + 1)	have st-key in DB, but no dyn-key response (do not encrypt, but use st-key to decrypt)

Where DB size is the number of entries i for node A in the entry number in the dynamic database.

Returning to FIG. 8, if there is an entry for node A in the dynamic data base, a check is made to see if a common dynamic key for node A and the protected client has expired (step 803).

If, for example, there is an entry for node A and the secured flag = 1, then node A is secured. Thus, the common dynamic key has not expired and the packet is encrypted using the session key and an encipherment function such as IDEA (step 806).

If the common dynamic key has expired, the dynamic data base entry for the node IP = A has a secured flag = 3 and the transition flag is $i \leq N$ (step 804) which means a key exchange is taking place.

The exchange of the dynamic parts of the public keys of the host client and the node with IP = A proceeds as follows. The host client (i.e., the source) sends its dynamic public key and IP address to the node with IP = A (the destination) (step 808) and waits for a reply (step 810). The dynamic public key of the host may be encrypted with the static public key of the node with IP = A. The reply is the dynamic public key of the destination node with IP = A. This may be encrypted

DISH
Exhibit 1003 Page 284

with the static public key of the host client. Steps 808 and 810 may be repeated several times, such as three times.

If no reply is received (step 812) from the destination, the source network security device sets the secured flag to 2 and the transition flag to 0 (step 814) in the DDB entry for the destination. If the packet to be encrypted originated from the host (step 816), the packet may be dropped (step 818). If the packet originated from another party, the network security device may try to decrypt the packet using the static private key(step 820).

If a reply is received, the transition flag for the destination node in the DDB entry 600 of the network security device of the host is set to N+2 (step 822), indicating that the common dynamic key is being calculated. Then a common dynamic (crypto) key for the source and destination is calculated by the network security device of the source (step 824) using, for example, a Diffie-Hellman technique as described above. The common session key is then entered into the DDB entry 600 of the source network security device (step 826) and the transition flag for this DDB entry is marked 0 (step 828)because the transition is complete. The secured flag = 1.

The exchange of dynamic public keys and the calculation of a common crypto key assumes that there is an entry for the destination node with IP = A in the static data base 412 (SDB) of the source network security device and in the dynamic data base 416 of the source network security device. That is, that these two network security devices have communicated before. If these entries do not exist (i.e., these two devices have not previously communicated), they may be created prior to the dynamic public key exchange (steps 708-722 described above).

If there is no DDB entry for node IP = A (step 802), an entry is created (step 830), the secured flag = 0, and the transition flag is marked $-i \geq -N$ (step 832). The SDB 500 is checked to determine if the source network security device has an entry for node IP = A (step 834).

If there is such an entry, proceed with the dynamic key exchange (steps 808-822), the secured flag is set to 1 and the transition flag is set as described above.

DISH
Exhibit 1003 Page 285

If there is no entry for node A in the SDB, then the network security device 400 sends its static public key in a key-packet to node A and drops the original IP-packet (step 836). The device waits a predetermined time, such as five seconds, for a reply (step 838). Steps 836 and 838 may be repeated several, e.g., three times. While waiting for a response, the transition flag is $-i \geq -N$. If a reply is received (step 840), an entry is created in the SDB (step 842), the secured flag = 1 and the transition flag is 0. When the static key is received, the network security device calculates a common static key using its static key and a standard Diffie-Hellman technique. The transition flag is set to $-(N+2)$. Once the static common key is calculated, it is used to encrypt the dynamic key exchange (steps 808-822). The inventive device preferably uses the well-known Diffie-Hellman key exchange protocol.

If no reply is received, the secured flag = 2 and the transition flag in the entry in the DDB is 0 because the transition off (step 814).

Both the static and the dynamic key request maybe repeated N_{try} times at not less then t_{expire} time intervals (in a preferred embodiment they are set to 8 tries and 2 ms, respectively). Note that entries in the SDB are burned in and are permanent. Entries in the DDB may be volatile, that is, the entries may be overwritten or lost if the device 400 is turned off.

Note that if the second flag for another node is set at either 2, 3, or 4, the network security device will continue to attempt a dynamic key exchange every predetermined period, such as every five minutes.

Expiration of the Dynamic Keys and Synchronization

As indicated above, the dynamic keys have a predetermined lifespan. For example, new dynamic keys may be generated every 24 hours. When the lifespan expires, all of the dynamic common key entries, which were calculated using an expired dynamic key, for other nodes are incorrect. Thus, all secured flags in the DDB are marked as secured = 3. When the dynamic key of a network security device's 24 hours expires, a new dynamic key is generated. The secured flag is then changed back to 1 (or 2) when the next packet (sent to or received from that IP-address) initiates a successful dynamic key exchange.

DISH
Exhibit 1003 Page 286

Because the dynamic keys of each network security device have a particular lifespan, such as 24 hours, there may be a time difference between times when two device's keys expire. For example, if two devices in different time zones are both programmed to generate new dynamic keys at midnight, there may be several hours difference between key expiration times. Thus, it is possible that one device's dynamic key may expire during a communication. Also, because Internet communications are connectionless, that is, the receiving party does not have to be connected to the sending party when the packet is transmitted, one or the other party's dynamic key may have expired before the packet is received.

One way to prevent this occurrence is to take into account this time difference. Referring back to FIG. 6, the DDB entry 600 contains an entry "time generated" 606, which indicates the time that the other device's dynamic key was generated. This is done by correcting the "time generated" entry by the time difference between the time the packet was sent (the time stamp entry 604 in the DDB entry) and the time the packet is received (the present time).

Also, the time generated 606 entry indicates to the network security device 400 when the other party's dynamic key expires. Thus, when a communication between the nodes is initiated, it may be determined whether a new dynamic key exchange is warranted, rather than attempting to use an expired common dynamic key.

During a dynamic key exchange, one party may have received the other party's dynamic key. The other side, however, may be calculating the common dynamic key and sending dynamic key requests encrypted with the static common key. To avoid having to drop the packet, if a received packet cannot be decrypted with a dynamic key, the device tries to decrypt the packet using the static key. As a result, the packet is dropped only if the packet cannot be decrypted with the static key, that is, if it is an illegal packet.

Receiving a Key Packet

When a network security device receives an IP-packet containing another party's static or dynamic public key (sent either as a reply to a key-request or as an initiation for a key exchange), the public key is extracted from the packet and sent to either the CPU 410 or the encryption module 418 for further processing.

DISH
Exhibit 1003 Page 287

There the shared secret key is calculated from the device's own private key and the other party's just received public key.

As discussed above, these tasks are calculation-intensive, and it may be preferable to provide a separate structure, such as the encryption module 418, so that the throughput of the entire device is not affected.

Packet Processing

Fig. 9 is a flowchart 900 illustrating a packet handling algorithm utilized by the inventive network security device. Illustratively, the packet arrives with the source address IP = C (step 901). The packet may arrive from the connected host at interface 402 or from the network at interface 408.

First consider the case where the packet arrives from the host at interface 402. If the packet carries an ICMP (Internet Control Message Protocol) or IGMP (Internet Gateway Message Protocol) identification (step 902), the packet is passed to the interface 408 without encryption. However, the source MAC address in the packet is translated to the MAC address of interface 408 (step 904). ICMP and IGMP Packets are not addressed to a destination host. Rather these packets are utilized by intermediate entities in the network, e.g., routers, for various functions. The source IP address is checked to make sure that it is the same as the entry burned into the SDB 412 for the connected host. This prevents an adversary from posing as the connected host to gain access to secure communications. This is called preventing "IP spoofing" and is described in detail in U.S. Patent Application Serial No. 08/529,497. The discussion of preventing IP spoofing is incorporated herein by reference.

If the destination to which the packet is addressed is insecure, the packet is dropped (step 906, 908). The device may be in a secured/unsecured mode (special order). In such case the packet will be sent unchanged.

Next, it is determined if the packet contains a part of a message that has been fragmented (step 910). If the packet contains a fragment, the fragments are collected (step 912) and the message is encrypted (step 914). The encryption takes place using the common session key and an encipherment function. If the encrypted message is too long for the particular LAN (step 916), it is fragmented

DISH
Exhibit 1003 Page 288

(step 918). An encrypted packet is then transmitted to interface 408 for transmission into the network 100 (step 920).

An encrypted packet carries a signature in the protocol part of the IP header. This indicates that the packet is encrypted. The IP address of a packet is not encrypted, otherwise the packet could not be routed through the network.

The case where the packet arrives via the network at interface 408 is now considered. If the packet is an ICMP or IGMP packet (step 940) no decryption is necessary and the packet is sent to the first interface 402 (step 942). If the packet is a key exchange packet (step 944) the packet is processed according to the key exchange protocol (step 946). If the packet is not encrypted (step 948) the packet is dropped (step 950). The device may be in a secured/unsecured mode (special order). In such a case the packet will be sent to the client unchanged. If the packet is encrypted but the network security device does not have the key (step 952), the key exchange protocol is carried out (step 954) and the packet is dropped (step 956). If the key is available in the dynamic data base of the network security device, the packet is decrypted (step 958) and sent to interface 402 (step 960).

For packets received from the network the MAC address of the network security device is translated into the MAC address of the client. For packets received from the protected client, the MAC address of the client is translated into the MAC address of the network security device.

Outgoing Packets

As discussed above, the network security device 100 receives an IP-packet on the first interface 402, processes it, and sends it onto network 100 via the second interface 408.

FIG. 10 illustrates an IP packet 1010 (IP_{in}) received from host 404, an IP packet (IP_{out}) 1010 prepared by the network security device 400, and an encrypted IP_{out} packet 1030 transmitted by the second interface 408. As seen in FIG. 10, the IP_{in} packet 1000 includes a MAC header 1002, containing the host's 404 MAC address, an IP header 1004, containing the host's IP address, and a payload 1006 containing data. The IP_{out} packet 1010 includes a MAC header 1012 containing the network security device's MAC address, an IP header 1014 containing the

DISH
Exhibit 1003 Page 289

host's 404 IP address, a proprietary header 1016, a payload 1118 containing the data, and a proprietary tail 1020. Preferably, the data in the payload 1118 is compressed and the proprietary tail 1120 includes packet length, protocol fragment, and checksum information. The encrypted IP_{out} packet 1030 preferably has everything after the proprietary header 1016 encrypted, including the compressed data 1018 and the proprietary tail 1020.

FIG. 11 is a flowchart 1100 illustrating the processing of IP_{in} and IP_{out}.

(a) Packet IP_{in} 1000 is received from the host 404 at the first interface 402 (step 1102).

(b) The IP and MAC headers are copied from IP_{in} to IP_{out} (step 1104).

(c) The destination MAC address in IP_{in} is replaced by the client's MAC-address (step 1106).

(d) Skip over the proprietary-header (step 1108).

(e) Compress the data from IP_{in} to IP_{out} (step 1110). Preferably, the data is compressed using the LZRW1 compression algorithm.

(f) Save original length, protocol, frag-info from IP_{in} into the proprietary tail (step 1112).

(g) In the IP_{out} header, set do not frag = off, and set IP_{out}-protocol = 99 (indicating proprietary protocol) (step 1114).

(h) Calculate the checksum and save it in the proprietary tail 1120(step 1116).

(i) Encrypt everything from after the proprietary header until the end of IP_{out} (step 1118).

(j) Fill the proprietary-header in IP_{out}; set protocol = 191 (encrypted packet) and calculate the header-checksum (step 1120).

Incoming Packets

For incoming packets, steps (b)-(j) are performed in reverse order.

Double Integrity Checks

The method illustrated in FIG. 11 provides a double integrity check. The checksum in the proprietary-header on the sender's side is calculated after the encryption and checked on the receiver's side before decryption, thus providing an integrity test of the encrypted data in transit.

DISH
Exhibit 1003 Page 290

The checksum in the proprietary-tail on the sender's side is calculated before encryption and checked on the receiver's side after decryption. This checksum provides strong authentication because the static and dynamic keys used to encrypt the checksum are known only by the two communicating devices. (Strong authentication is where one can prove it knows a secret without revealing the secret.) By using a decrypted checksum that agrees with the packet proves the sender and receiver share the same key.

If the encrypted tail checksum is replaced with a secure hash function, such as the well-known MD5 algorithm, after the packet is encrypted, it becomes a digital signature. Where the tail checksum is encrypted with a static common key, it verifies that the dynamic public key originated from the sender, thus authenticating the sender. When the tail checksum is encrypted with a dynamic common key, it also verifies that the packet originated from the sender, authenticating that the packet originated from the sender.

Modifications for Use With LANS

Referring again to FIG. 4B, the network security device 400' may be modified to protect a LAN 450 instead of a single host. These modifications are described below. In this illustrative embodiment, the network security device may protect a Class-C LAN having up to 254 clients (i.e., workstations 454, server 452, etc.), but other LAN types, such as Class-A and Class-B, are also contemplated by the invention.

During activation, the IP address burned into the flash memory 412 is the Class-C post of the client LAN's IP address. A default MAC address, such as Oxf may also be burned into the flash memory 412. This default MAC address is used in the static key generation. Recall that the MAC address is used in the static key seed generation.

A LAN-type network security device 400' may build a MAC-table 460 which contains its clients' IP and MAC addresses. This table serves two functions. First, it prevents IP spoofing of any of the LAN device's 400' clients. Thus, if a packet is received on the first interface 402 that does not have an IP or MAC address of one of the nodes in the LAN, that packet is dropped.

DISH
Exhibit 1003 Page 291

Second, it facilitates the delivery of packets to clients connected to the LAN 450. This permits packets to be sent from one protected client to another without the packet appearing at the second interface 408.

In short, a unique network security device has been disclosed. Finally, the above described embodiments of the invention are intended to be illustrative only. Numerous alternative embodiments may be devised by those skilled in the art without departing from the scope of the following claims.

DISH
Exhibit 1003 Page 292

CLAIMS

I claim:

1. A network security device configured to protect at least one particular node, the node having a first physical layer address and an Internet address and which communicates via a network, comprising:

   a. a first interface connected to the at least one particular node and having said first physical layer address of the node;

   b. a second interface connected to the network and having a second physical layer address, and

   c. a processing circuit connected to said first and second interfaces, said processing circuit:

      (1) for a packet received at said first interface from said one particular node and the packet having a header containing a source address that is the Internet address of the at least one particular node and said first physical layer address of said one particular node, the circuit configured to:

         A. replace the first physical layer address contained in the received packet header with the second physical layer address;

         B. determine a checksum verifying the packet and saving the determined checksum in the packet; and

         C. encrypting the packet including the checksum, but leaving the Internet address unencrypted and its position in the packet header unchanged;

      (2) for a packet received at said second interface from said network and the packet having a header containing a destination address that is the Internet address of the at least one particular node and said second physical layer address of said second interface, the circuit configured to:

         A. decrypt the packet including a received checksum

         B. determine if the checksum verifies the packet; and

DISH
Exhibit 1003 Page 293

C. replace the second physical layer address contained in the received packet header with said first physical layer address of said at least one particular node before said packet is transmitted to the at least one particular node, and leaving the Internet address unencrypted and its position in the packet header unchanged.

2. The network security device of claim 1, wherein the processing circuit is further configured to:

a. for a packet received at the first interface:

(1) determine a second checksum verifying the encrypted packet; and

(2) save the second checksum in an unencrypted portion of the packet; and

b. for a packet received at the second interface:

(1) determine if the second checksum verifies the encrypted packet.

3. A method for transmitting a packet into a network comprising the steps of:

a. generating a packet having a header containing a first media access control (MAC) address, an IP address of a destination, and user data,

b. in a network security device which does no routing and is connected to said network, translating said first MAC address into a second MAC address of said network security device,

c. determining a checksum for the packet and saving the checksum in the packet

d. encrypting the user data and the checksum, but not the IP address and retaining as unchanged said IP address and its position in said header, and

e. transmitting said packet into said network.

DISH
Exhibit 1003 Page 294

4. The method of claim 3, further comprising the steps of:

a. determining a second checksum for the packet, including the encrypted user data and checksum;

b. saving the second checksum in an unencrypted portion of the packet.

5. A network security device connected between: (1) a node having an Internet address and (2) a communication network, the device comprising:

(a) a first interface connected to at least one node, the first interface having a first media access control (MAC) address;

(b) a second interface connected to the communication network and having a second MAC address;

(c) a processor connected to the first and second interfaces, the processor configured to:

(1) receive a packet from the first interface, the packet having a transport layer header, a network layer header, and the first MAC address; the processor configured to:

A. replace the first MAC address with the second MAC address in the received packet,

B. determine a first checksum verifying the received packet and save the first checksum in the packet;

C. encrypt the received transport layer header and the first checksum, and to not encrypt the received network layer header; and to transmit the packet to the second interface; and

(2) receive a packet from the second interface, the packet having an encrypted transport layer header and second checksum, an unencrypted network layer header, and the second MAC address; the processor configured to:

A. replace the second MAC address with the first MAC address in the received packet;

B. decrypt the packet including the transport layer header and the second checksum; and

DISH
Exhibit 1003 Page 295

C. to transmit the packet to the first interface.

6. A method for generating a secret key for a network security device configured to protect at least one host, the secret key being unique to that network security device, the method comprising the steps of:

a. deriving a seed based on at least one of an Internet protocol (IP) and physical layer address of the at least one host; and

b. generating a random number based on the seed.

7. The method of claim 6, wherein the step of deriving the seed further comprises deriving the seed according to:

$$seed = IP + MAC_l + MAC_h + serial + time$$

where:

IP = an IP address for the host;

MAC_l is a least significant portion of a physical layer address of the host;

MAC_h is a most significant portion of host's physical layer address;

serial is a serial number of the network security device; and

time is a time the seed is derived.

8. The method of claim 6, wherein the step of generating a random number further comprises supplying the seed to a random number generator and using an output of the random number generator as the secret key.

9. A method for synchronizing a key exchange between a first network security device having a first dynamic key and a second network security device having a second dynamic key, said first and second dynamic keys having a predetermined lifespan and in which at least a first dynamic key of the first network security device may expire before being received by the second network security device, the method comprising:

a. including with the first dynamic key a time stamp indicating a time that the dynamic key was transmitted and a time that the dynamic key was generated;

DISH
Exhibit 1003 Page 296

b. the second network security device receiving the first dynamic key, time stamp, and time the first dynamic key was generated;

c. maintaining in the second network security device a database containing the received time stamp and time the first dynamic key was generated; and

d. determining a difference between a time indicated in the received time stamp and a current time; and

e. correcting the time that the first dynamic key was generated by the determined difference.

10. A network security device configured to protect a local area network (LAN) having a plurality of nodes, each node having a physical layer address and an Internet address, the LAN being in communication with a second network, the network security device comprising:

a. a first interface connected to the LAN;

b. a second interface connected to the second network and having a second physical layer address, and

c. a processing circuit connected to said first and second interfaces, said processing circuit including a table of physical layer and Internet addresses of each of the plurality of nodes in the LAN;

(1) for a packet received at said first interface from one of the plurality of nodes in the LAN and the packet having a header containing a source address that is the Internet address of the one of the plurality of nodes, a physical layer address of the one of the plurality of nodes, and a destination address, the circuit configured to:

A. determine if the destination address is an Internet address of another node in the LAN;

i. if so, transmit the packet to the destination node using the first interface;

ii. if not, then replace the first physical layer address contained in the received packet header with the

DISH
Exhibit 1003 Page 297

second physical layer address; and encrypt the packet leaving the Internet address unencrypted and its position in the packet header unchanged;

(2) for a packet received at said second interface from said network and the packet having a header containing a destination address that is the Internet address of one of the plurality of nodes and said second physical layer address of said second interface, the circuit configured to:

A. decrypt the packet;

B. replace the second physical layer address contained in the received packet header with said physical layer address of said one of the plurality of nodes before the packet is transmitted to the one of the plurality of particular nodes.

11. The network security device of claim 10, wherein when a packet is received on the first interface, the processing circuit is further configured to compare at least one of the physical layer address and the Internet address in the received packet with the physical layer and Internet addresses in the table to determine whether the packet originated from one of the plurality of nodes and, if not, dropping the packet.

DISH
Exhibit 1003 Page 298

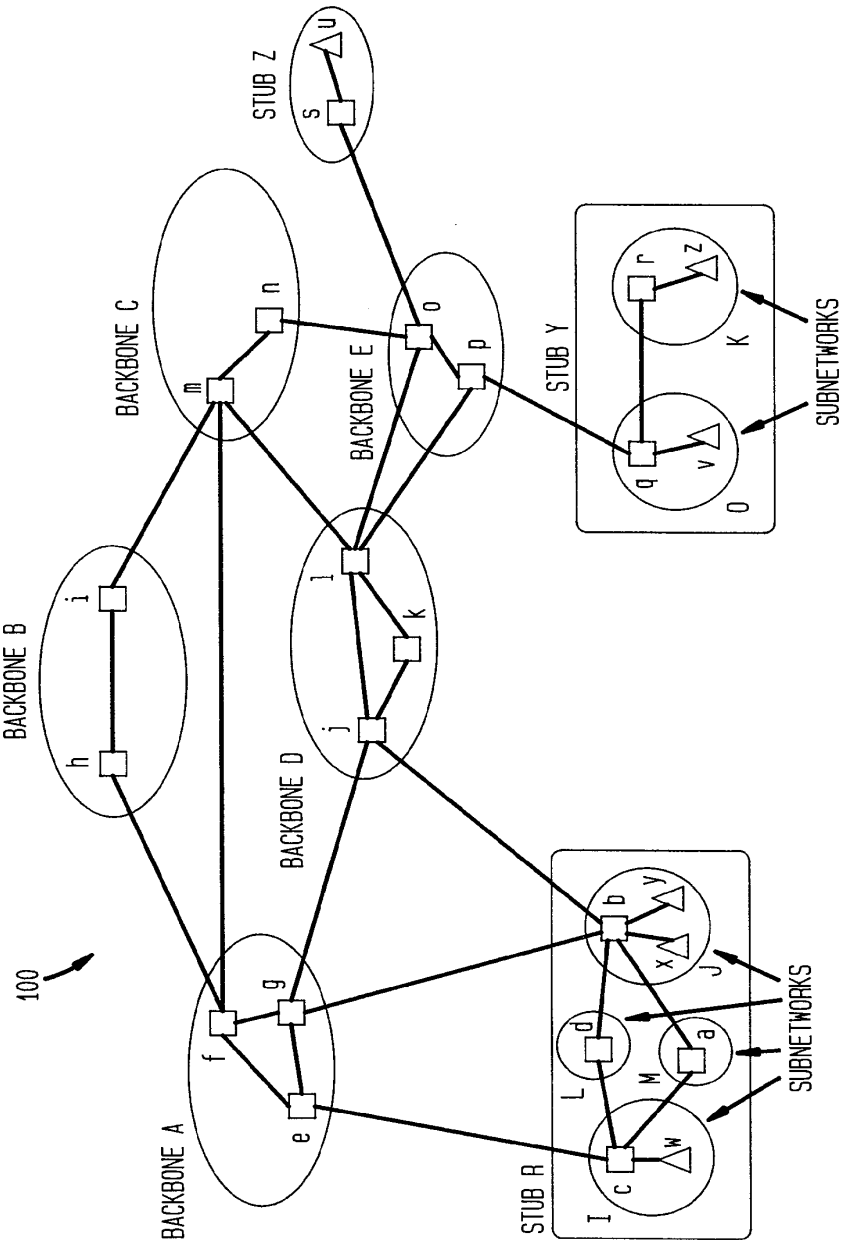

FIG. 1
(PRIOR ART)

DISH
Exhibit 1003 Page 299

FIG. 2
(PRIOR ART)

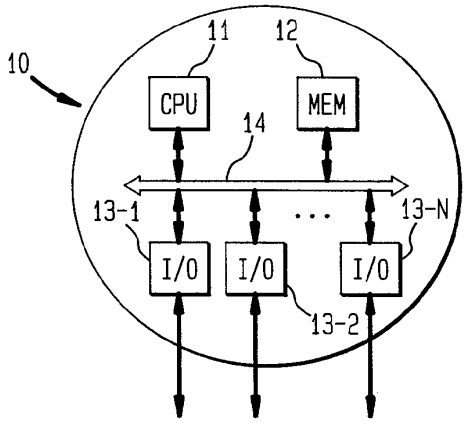

FIG. 3A
(PRIOR ART)

FIG. 3B
(PRIOR ART)

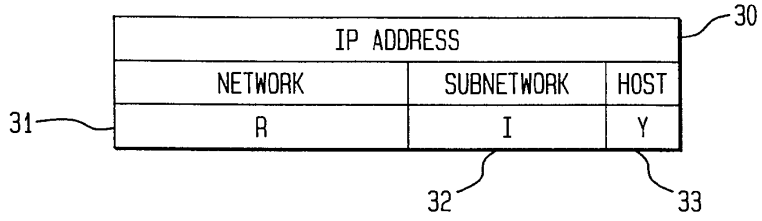

DISH
Exhibit 1003 Page 300

FIG. 4A

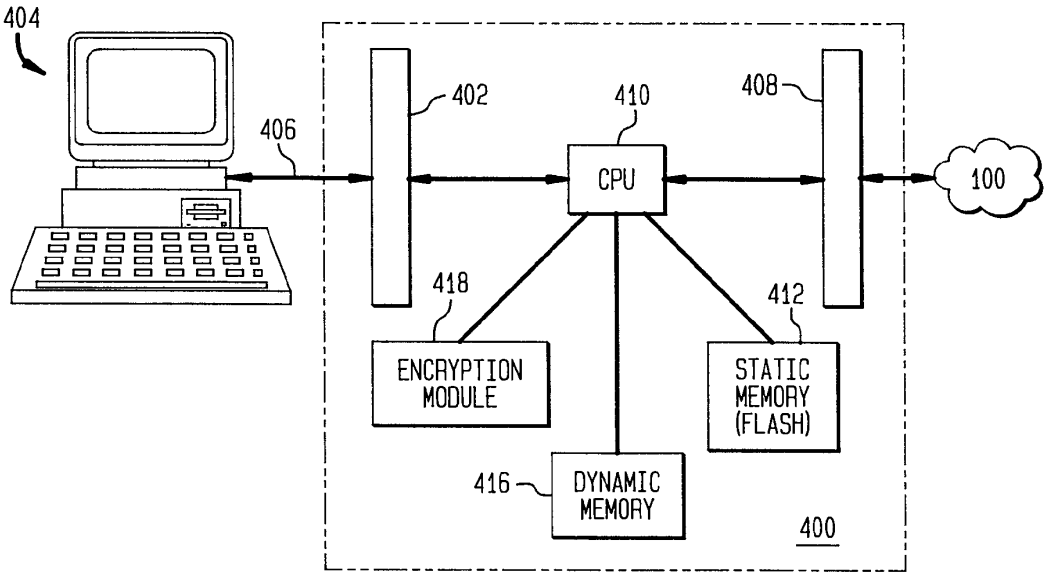
404
406
402
410
408
CPU
100
418
412
ENCRYPTION MODULE
STATIC MEMORY (FLASH)
416
DYNAMIC MEMORY
400

FIG. 4B

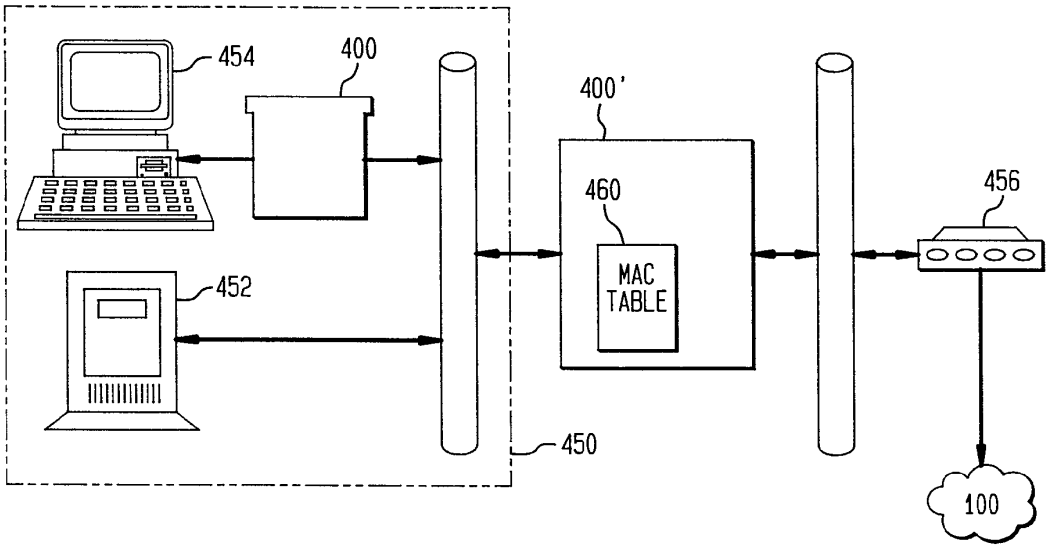
454
400
400'
460
456
MAC TABLE
452
450
100

FIG. 5

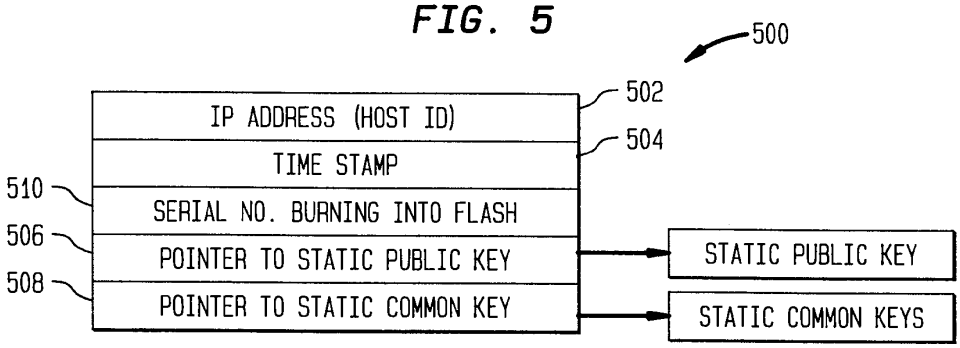

FIG. 6

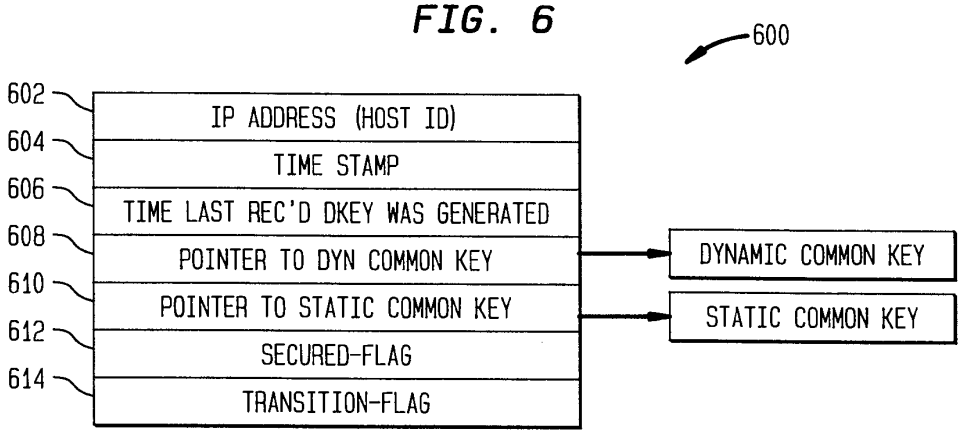

DISH
Exhibit 1003 Page 302

FIG. 7

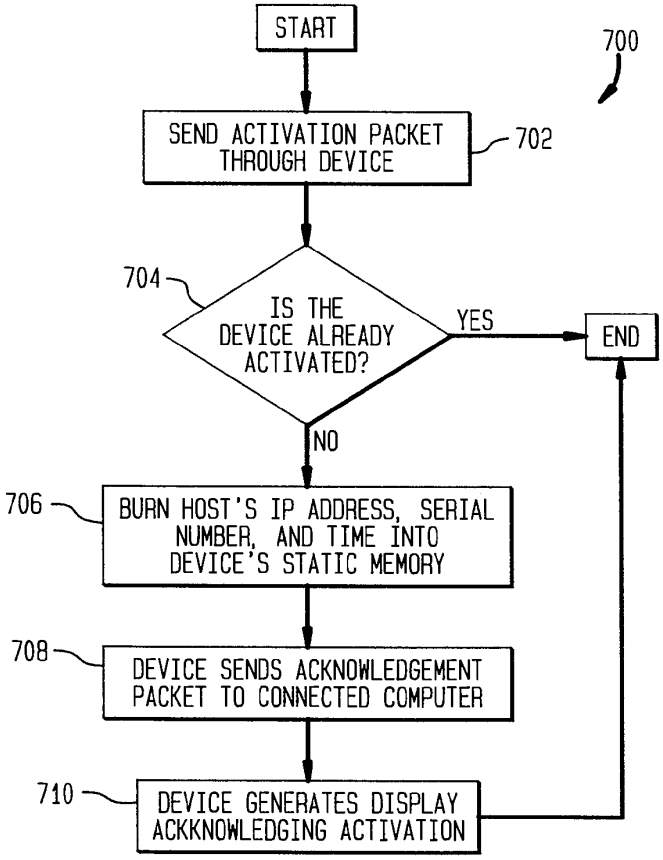

DISH
Exhibit 1003 Page 303

FIG. 8

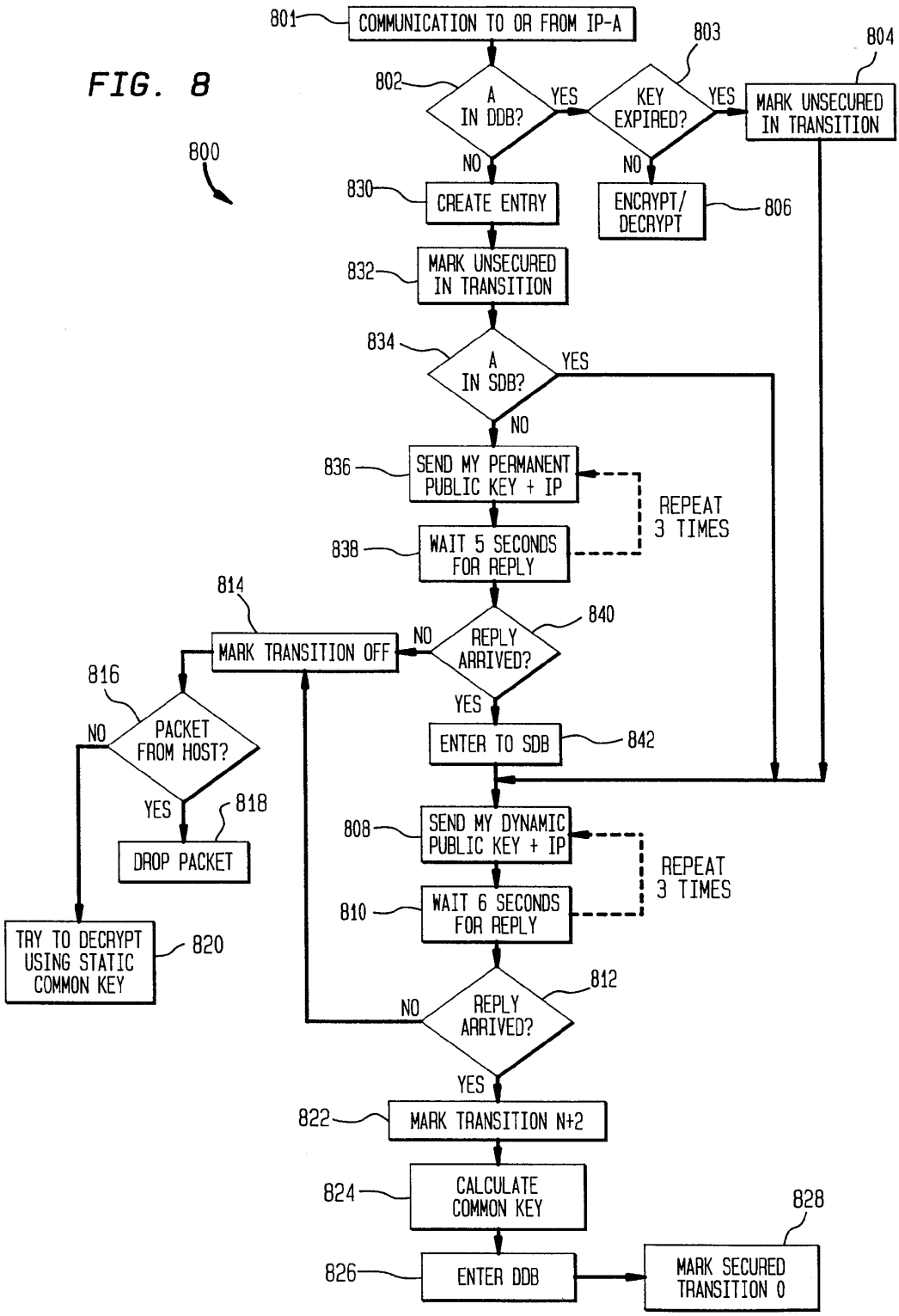
800
801
COMMUNICATION TO OR FROM IP-A
802
A IN DDB?
YES
803
KEY EXPIRED?
YES
804
MARK UNSECURED IN TRANSITION
NO
NO
830
CREATE ENTRY
ENCRYPT/ DECRYPT
806
832
MARK UNSECURED IN TRANSITION
834
A IN SDB?
YES
NO
836
SEND MY PERMANENT PUBLIC KEY + IP
REPEAT 3 TIMES
838
WAIT 5 SECONDS FOR REPLY
814
MARK TRANSITION OFF
NO
840
REPLY ARRIVED?
816
PACKET FROM HOST?
NO
YES
YES
ENTER TO SDB
842
818
DROP PACKET
808
SEND MY DYNAMIC PUBLIC KEY + IP
REPEAT 3 TIMES
810
WAIT 6 SECONDS FOR REPLY
TRY TO DECRYPT USING STATIC COMMON KEY
820
812
NO
REPLY ARRIVED?
YES
822
MARK TRANSITION N+2
824
CALCULATE COMMON KEY
828
826
ENTER DDB
MARK SECURED TRANSITION 0

FIG. 9

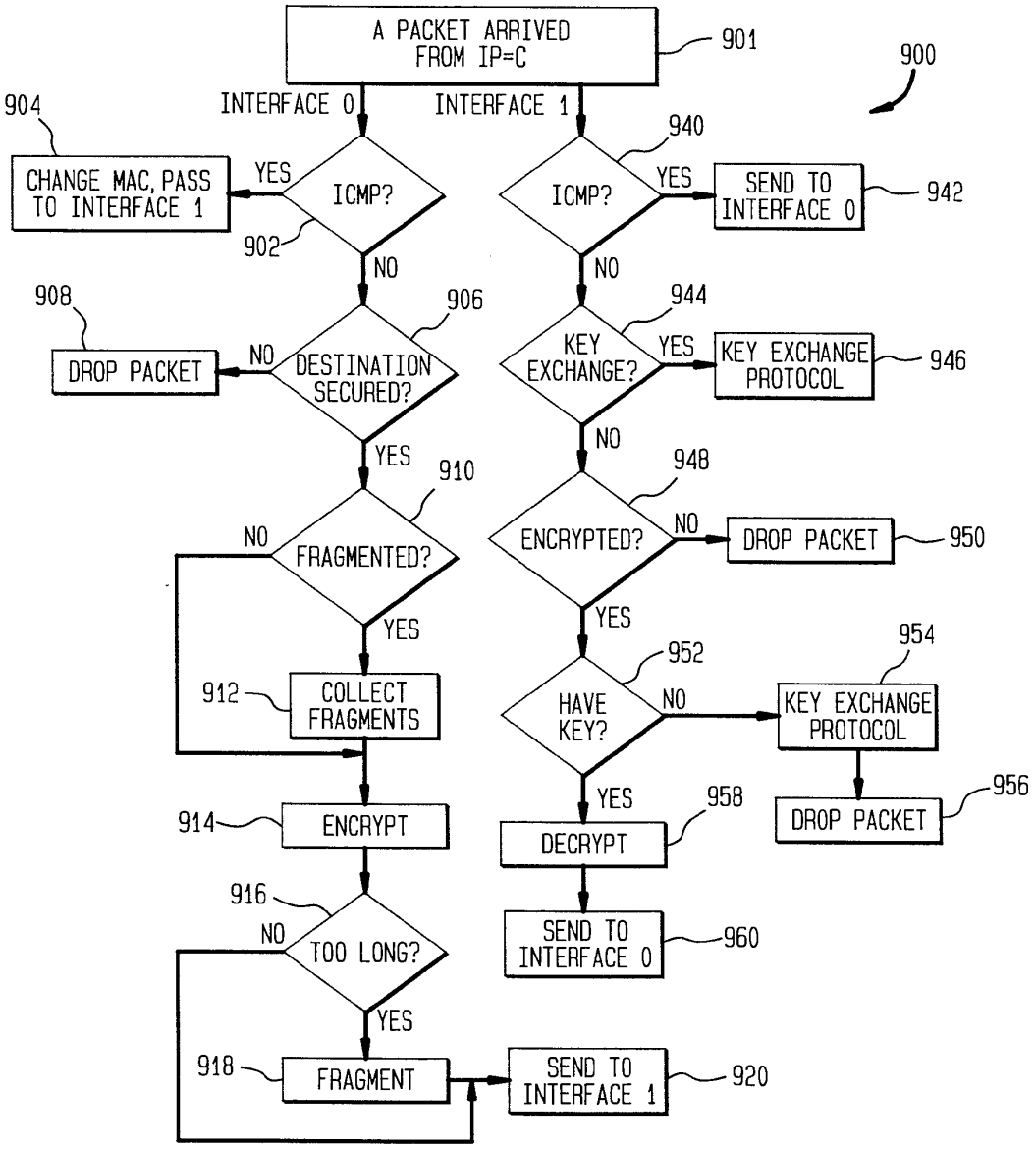

DISH
Exhibit 1003 Page 305

FIG. 10

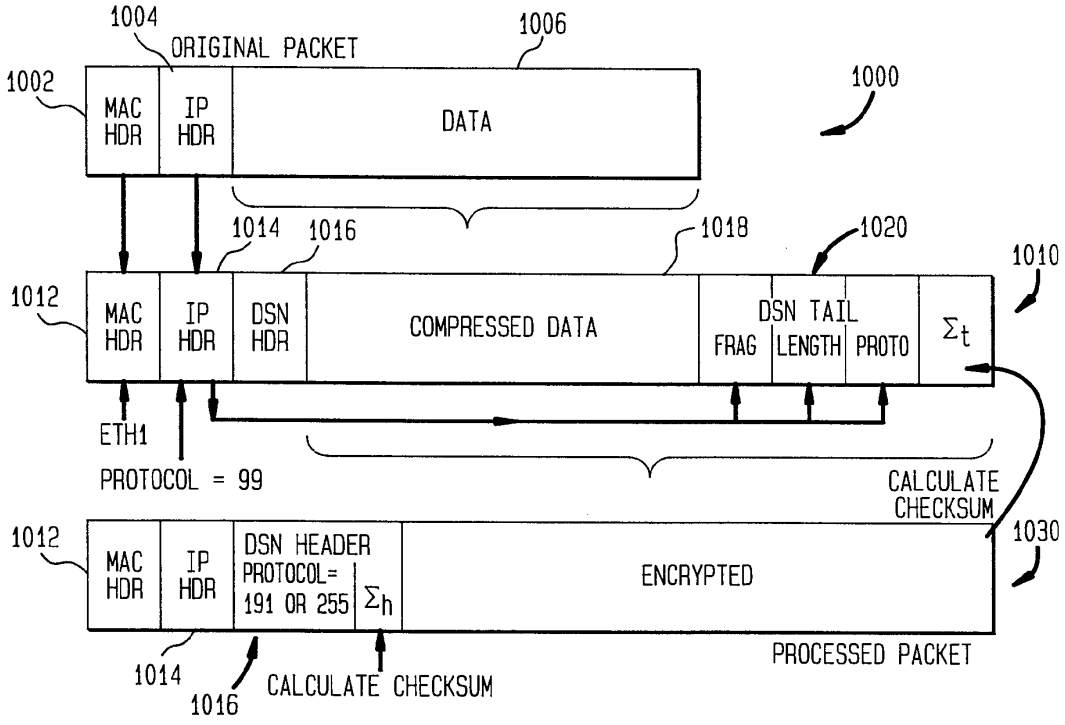

DISH
Exhibit 1003 Page 306

FIG. 11

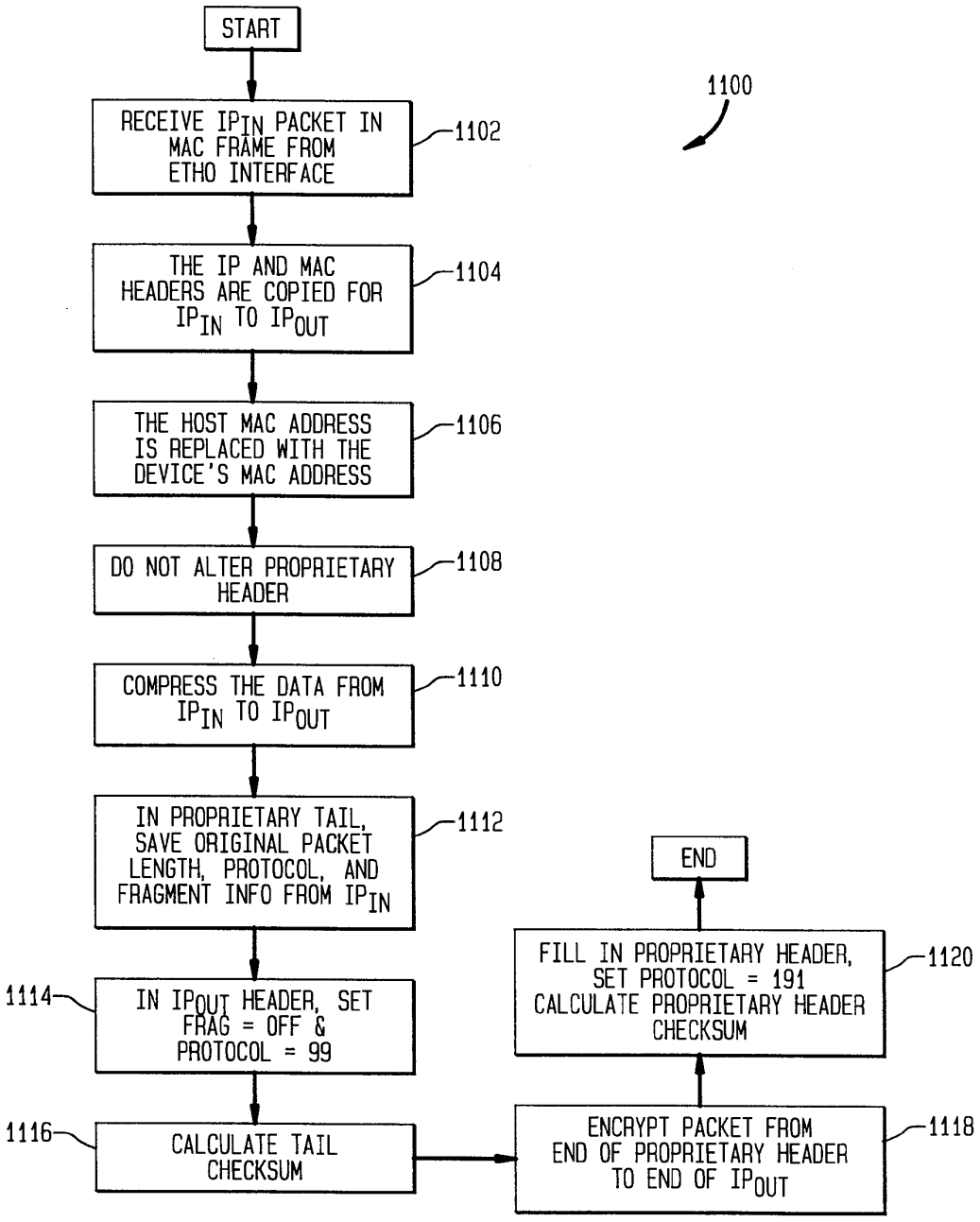

DISH
Exhibit 1003 Page 307

PCT WORLD INTELLECTUAL PROPERTY ORGANIZATION
International Bureau

INTERNATIONAL APPLICATION PUBLISHED UNDER THE PATENT COOPERATION TREATY (PCT)

(51) International Patent Classification 6 :		(11) International Publication Number:	WO 99/22463
H04B 7/005, 7/01, 7/015, 15/00	A1	(43) International Publication Date:	6 May 1999 (06.05.99)

(21) International Application Number: PCT/US98/22801

(22) International Filing Date: 27 October 1998 (27.10.98)

(30) Priority Data:

08/959,409	28 October 1997 (28.10.97)	US
09/079,535	15 May 1998 (15.05.98)	US

(71) Applicant: MOTOROLA INC. [US/US]; 1303 East Algonquin Road, Schaumburg, IL 60196 (US).

(72) Inventors: GOLDBERG, Steven, Jeffrey; 4409 Foxfire Way, Fort Worth, TX 76133 (US). BUDNIK, Brian, Joseph; 6413 Old Mill Circle, Watauga, TX 76148 (US). SEXTON, Thomas, Aloysius; Apartment 224, 5333 Fossil Creek Boulevard, Fort Worth, TX 76137 (US). CARSELLO, Stephen, Rocco; 8204 Ranier Road, Fort Worth, TX 76137 (US).

(74) Agents: BETHARDS, Charles, W. et al.; Motorola Inc., Intellectual Property Dept., 5401 North Beach Street/MS E230, Fort Worth, TX 76137 (US).

(81) Designated States: CA, CN, European patent (AT, BE, CH, CY, DE, DK, ES, FI, FR, GB, GR, IE, IT, LU, MC, NL, PT, SE).

Published
With international search report.
Before the expiration of the time limit for amending the claims and to be republished in the event of the receipt of amendments.

(54) Title: LIMITING AN INTERVAL OF CARRIER CANCELLATION AND REDUCING ERRORS CAUSED BY INTERSYMBOL INTERFERENCE DURING A SIMULCAST TRANSMISSION

(57) Abstract

In a messaging system having a plurality of simulcasting base transmitters (104), a plurality of pseudorandom sequence generators (216) are provided (402) for the plurality of base transmitters. The plurality of pseudorandom sequence generators are arranged (403) to ensure that they generate a plurality of pseudorandom sequences having sub–sequences that are different from one another during concurrent transmissions by the plurality of base transmitters. A cancellation–affecting parameter of the plurality of base transmitters is adjusted (404, 406, 408) in accordance with the plurality of pseudorandom sequences during the simulcast transmission from the plurality of base transmitters to limit intervals of carrier cancellation. In addition, a controller (512) controls (1106) at least two transmitters (702) to transmit at least two simulcast signals (902, 904) during a time period. The at least two simulcast signals produce intersymbol interference at a receiver. At least one of the transmitters changes (1108) its output amplitude during a portion of the time period, thereby altering the intersymbol interference during the portion of the time period.

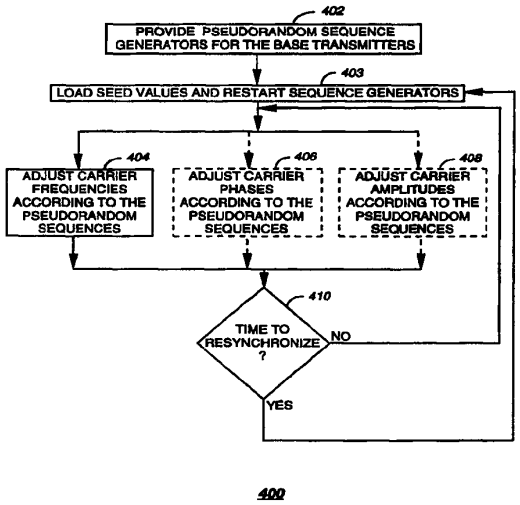

400

FOR THE PURPOSES OF INFORMATION ONLY

Codes used to identify States party to the PCT on the front pages of pamphlets publishing international applications under the PCT.

AL	Albania	**ES**	Spain	**LS**	Lesotho	**SI**	Slovenia
AM	Armenia	**FI**	Finland	**LT**	Lithuania	**SK**	Slovakia
AT	Austria	**FR**	France	**LU**	Luxembourg	**SN**	Senegal
AU	Australia	**GA**	Gabon	**LV**	Latvia	**SZ**	Swaziland
AZ	Azerbaijan	**GB**	United Kingdom	**MC**	Monaco	**TD**	Chad
BA	Bosnia and Herzegovina	**GE**	Georgia	**MD**	Republic of Moldova	**TG**	Togo
BB	Barbados	**GH**	Ghana	**MG**	Madagascar	**TJ**	Tajikistan
BE	Belgium	**GN**	Guinea	**MK**	The former Yugoslav Republic of Macedonia	**TM**	Turkmenistan
BF	Burkina Faso	**GR**	Greece			**TR**	Turkey
BG	Bulgaria	**HU**	Hungary	**ML**	Mali	**TT**	Trinidad and Tobago
BJ	Benin	**IE**	Ireland	**MN**	Mongolia	**UA**	Ukraine
BR	Brazil	**IL**	Israel	**MR**	Mauritania	**UG**	Uganda
BY	Belarus	**IS**	Iceland	**MW**	Malawi	**US**	United States of America
CA	Canada	**IT**	Italy	**MX**	Mexico	**UZ**	Uzbekistan
CF	Central African Republic	**JP**	Japan	**NE**	Niger	**VN**	Viet Nam
CG	Congo	**KE**	Kenya	**NL**	Netherlands	**YU**	Yugoslavia
CH	Switzerland	**KG**	Kyrgyzstan	**NO**	Norway	**ZW**	Zimbabwe
CI	Côte d'Ivoire	**KP**	Democratic People's Republic of Korea	**NZ**	New Zealand		
CM	Cameroon			**PL**	Poland		
CN	China	**KR**	Republic of Korea	**PT**	Portugal		
CU	Cuba	**KZ**	Kazakstan	**RO**	Romania		
CZ	Czech Republic	**LC**	Saint Lucia	**RU**	Russian Federation		
DE	Germany	**LI**	Liechtenstein	**SD**	Sudan		
DK	Denmark	**LK**	Sri Lanka	**SE**	Sweden		
EE	Estonia	**LR**	Liberia	**SG**	Singapore		

LIMITING AN INTERVAL OF CARRIER CANCELLATION AND REDUCING ERRORS CAUSED BY INTERSYMBOL INTERFERENCE DURING A SIMULCAST TRANSMISSION

Field of the Invention

This invention relates in general to radio communication systems, and more specifically to a method and apparatus in a messaging system for limiting an interval of carrier cancellation and for reducing errors caused by intersymbol interference during a simulcast transmission.

Background of the Invention

Radio messaging systems have utilized simulcast transmissions from multiple transmitters for providing radio coverage to large geographic areas. During a simulcast transmission a receiver positioned midway between two transmitters often can receive signals from both transmitters. The resultant instantaneous sum of the two signals depends upon their relative phase, and can be either larger or smaller than either signal alone. For example, if the two signals are substantially equal in amplitude and phase at the receiver, their resultant sum will be about twice the amplitude of either signal alone. If, however, the two signals are substantially equal in amplitude and 180 degrees out of phase, their resultant sum can be so small as to be undetectable by the receiver, due to destructive cancellation of the two signals.

Modern messaging systems utilize forward error correcting codes and bit interleaving to allow messages to be transmitted successfully in the presence of brief fades and noise bursts. Thus, an error-free message can be received even in the presence of intervals of destructive cancellation, provided that the intervals of destructive cancellation are sufficiently brief. To ensure that the intervals of destructive cancellation are sufficiently brief, the prior art messaging systems have employed a technique of permanently offsetting the carrier frequencies of adjacent transmitters with respect to one another by a small, fixed amount, e.g., 15 to 100 Hz.

A problem with the technique of permanently offsetting the carrier frequencies of adjacent transmitters is that it requires additional system

DISH
Exhibit 1003 Page 310

planning and effort in setting up the radio messaging system. Furthermore, the technique can cause difficulties when adding new transmitters to an existing system, because the frequency offsets of many of the existing transmitters may have to be readjusted. In addition, some specific frequency offsets between adjacent transmitters, e.g., 200 Hz, are known to cause a higher word error rate, and should be avoided.

Good simulcast transmission has always required some form of delay equalization or launch time synchronization to ensure that the transmissions from different transmitters begin at the same time. For low speed data, having the transmissions begin at the same time has usually been sufficient. For the high speed data which is becoming more prevalent today, having the transmissions begin at the same time is necessary, but not sufficient. The reason is that differential transmission delay introduced in the air links can become a significant fraction of the symbol period when the symbol rate is high. When differential transmission delay becomes a significant fraction of the symbol period, intersymbol interference can occur when two or more simulcast signals arrive at the receiver with similar amplitudes. Such intersymbol interference can cause a high error rate in the received signal.

Thus, what is needed is a method and apparatus for limiting the intervals of destructive cancellation during simulcast transmissions. The method and apparatus preferably will limit the intervals of destructive cancellation without utilizing the prior art technique of permanently offsetting the carrier frequencies of adjacent transmitters with respect to one another.

What is further needed is a method and apparatus that can reduce errors caused by intersymbol interference during a simulcast transmission when two or more simulcast signals are received at similar amplitudes with different transmission delays. The method and apparatus preferably will operate without requiring a custom tuning adjustment during installation and system setup.

Summary of the Invention

An aspect of the present invention is a method in a messaging system having a plurality of base transmitters, the method for limiting an interval of carrier cancellation at a reception point during a simulcast

DISH
Exhibit 1003 Page 311

transmission. The method comprises the step of providing a plurality of pseudorandom sequence generators for the plurality of base transmitters, the plurality of pseudorandom sequence generators arranged to ensure that they generate a plurality of pseudorandom sequences having sub-sequences that are different from one another during concurrent transmissions by the plurality of base transmitters. The method further comprises the step of adjusting a cancellation-affecting parameter of the plurality of base transmitters in accordance with the plurality of pseudorandom sequences during the simulcast transmission from the plurality of base transmitters.

Another aspect of the present invention is a base transmitter in a messaging system having a plurality of base transmitters, the base transmitter for limiting an interval of carrier cancellation at a reception point during a simulcast transmission. The base transmitter comprises a transmitter element for transmitting a message, and a processing system coupled to the transmitter element for controlling the transmitter element to transmit the message. The base transmitter further comprises an input interface coupled to the processing system for receiving the message; and a pseudorandom sequence generator coupled to the transmitter element, the pseudorandom sequence generator arranged to ensure that it generates a pseudorandom sequence having sub-sequences that are different from those generated in other ones of the plurality of base transmitters during concurrent transmissions by the plurality of base transmitters. The transmitter element is arranged such that the pseudorandom sequence generator adjusts a cancellation-affecting parameter of the transmitter element in accordance with the pseudorandom sequence during the simulcast transmission from the base transmitter.

A third aspect of the present invention is a method in a messaging system having a plurality of base transmitters, the method for limiting an interval of carrier cancellation at a reception point during a simulcast transmission. The method comprises the step of providing a plurality of pseudorandom sequence generators for the plurality of base transmitters, the plurality of pseudorandom sequence generators arranged to generate a plurality of pseudorandom sequences having sub-sequences that have more than a predetermined probability of being different from one another during concurrent transmissions by the plurality of base

DISH
Exhibit 1003 Page 312

transmitters. A parameter of the plurality of pseudorandom sequences is optimized according to a characteristic of a communication protocol utilized by the messaging system. The method further comprises the step of adjusting a cancellation-affecting parameter of the plurality of base transmitters in accordance with the plurality of pseudorandom sequences during the simulcast transmission from the plurality of base transmitters.

A fourth aspect of the present invention is a method in a wireless communication system for reducing errors caused by intersymbol interference in at least two simulcast signals transmitted during a time period. The at least two simulcast signals are received at similar amplitudes and have different transmission delays with respect to one another. The method comprises the steps of transmitting the at least two simulcast signals from a corresponding at least two transmitters, and changing an output amplitude of at least one of the at least two transmitters during a portion of the time period, thereby altering the intersymbol interference during the portion of the time period.

A fifth aspect of the present invention is a transmitter in a wireless communication system for reducing errors caused by intersymbol interference in at least two simulcast signals transmitted during a time period. The at least two simulcast signals are received by a receiver at similar amplitudes and have different transmission delays with respect to one another. The transmitter comprises a transmitter element for transmitting a first simulcast signal sent simultaneously with at least a second simulcast signal from another transmitter, and a modulator coupled to the transmitter element for changing an output amplitude of the transmitter during a portion of the time period, thereby altering the intersymbol interference at the receiver during the portion of the time period.

A sixth aspect of the present invention is a controller in a wireless communication system for reducing errors caused by intersymbol interference in at least two simulcast signals transmitted during a time period. The at least two simulcast signals are received at similar amplitudes and have different transmission delays with respect to one another. The controller comprises a network interface for receiving a message from a message originator, and a processing system coupled to the network interface for processing the message. The controller further comprises a base station interface coupled to the processing system for

DISH
Exhibit 1003 Page 313

controlling a transmitter to transmit one of the at least two simulcast signals. The processing system is programmed to control the transmitter to change an output amplitude of the transmitter during a portion of the time period, thereby altering the intersymbol interference during the portion of the time period.

Brief Description of the Drawings

FIG. 1 is an electrical block diagram of a messaging system in accordance with the present invention.

FIG. 2 is an electrical block diagram of an exemplary inplementation of a base transmitter in accordance with the present invention.

FIG. 3 is a diagram depicting amplitude and relative phase of two carriers offset in frequency in accordance with the present invention.

FIG. 4 is a flow chart depicting operation of the messaging system in accordance with the present invention.

FIG. 5 is an electrical block diagram of an exemplary wireless communication system in accordance with the present invention.

FIG. 6 is an electrical block diagram of an exemplary controller in accordance with the present invention.

FIG. 7 is an electrical block diagram of an exemplary base station in accordance with the present invention.

FIG. 8 is a timing diagram depicting intersymbol interference in a prior art wireless communication system.

FIG. 9 is a timing diagram depicting reduced intersymbol interference in the wireless communication system in accordance with the present invention.

FIG. 10 is an exemplary protocol diagram in accordance with the present invention.

FIG. 11 is a flow diagram depicting operation of the exemplary wireless communication system in accordance with the present invention.

Detailed Description of the Drawings

Referring to FIG. 1, an electrical block diagram of a messaging system in accordance with the present invention comprises a plurality of

DISH
Exhibit 1003 Page 314

subscriber units 102, which communicate by radio with a fixed portion of the radio system, comprising a plurality of base transmitters 104 and a plurality of controllers 110. The base transmitters 104 are coupled via communication links 106 to the plurality of controllers 110 for control by and communication with the plurality of controllers 110 utilizing well-known techniques. The controllers 110 are coupled to a home controller 120 via communication links 122, 124, and via a conventional communication network 108 for receiving selective call messages from the home controller 120. The home controller 120 and the controllers 110 preferably communicate by utilizing a well-known protocol, e.g., the Telocator Network Paging Protocol (TNPP), the Wireless Messaging transfer protocol (WMtp™), or the InterPaging Networking Protocol (IPNP). It will be appreciated that, alternatively, the home controller 120 and the controller 110 can be collocated. The home controller 120 is preferably coupled via telephone links 126 to a public switched telephone network 112 (PSTN) for receiving the messages from message originators utilizing, for example, a telephone 114 or a personal computer 116 to originate the messages. It will be appreciated that, alternatively, other types of communication networks, e.g., packet switched networks, local area networks, and the Internet can be utilized as well for transporting originated messages to the home controller 120. The hardware of the home controller 120 is preferably similar to the Wireless Messaging Gateway (WMG™) Administrator! paging terminal, while the hardware of the controllers 110 is preferably similar to that of the RF-Conductor!™ message distributor, both manufactured by Motorola, Inc. of Schaumburg, IL. The hardware of the base transmitters 104 is preferably similar to that of the Nucleus® and RF-Orchestra!® transmitters manufactured by Motorola, Inc. It will be appreciated that other similar hardware can be utilized as well for the home controller 120, the controllers 110, and the base transmitters 104. It will be further appreciated that the present invention can be applied to both one-way and two-way selective call messaging systems.

The protocol utilized for transmitting the messages between the base transmitters 104 and the subscriber units 102 is preferably similar to Motorola's well-known FLEX™ family of digital selective call signaling protocols. These protocols utilize well-known error detection and error correction techniques and are therefore tolerant to bit errors occurring during transmission,

DISH
Exhibit 1003 Page 315

provided that the bit errors are not too numerous in any one code word. It will be appreciated that other similar messaging protocols can be used as well.

Referring to FIG. 2, an electrical block diagram depicts an exemplary inplementation of the base transmitter 104 in accordance with the present invention. The base transmitter 104 comprises an antenna 204 for emitting a radio signal comprising a message. The base transmitter 104 further comprises a conventional transmitter element 208 coupled to the antenna 204 for transmitting the message, and a processing system 206 coupled to the transmitter element 208 for controlling the transmitter element 208 to transmit the message. The processing system is further coupled to a conventional pseudorandom sequence generator 216, which is also coupled to the transmitter element 208. The pseudorandom sequence generator 216 is arranged to ensure that it generates a pseudorandom sequence having sub-sequences that are different from those generated in other ones of the plurality of base transmitters during concurrent transmissions by the plurality of base transmitters, as described further below. Preferably, the pseudorandom sequence generator 216 is further arranged to provide a pseudorandom sequence identical to that of other base transmitters of the plurality of base transmitters, but initialized, concurrently with the other base transmitters, with a seed value different from that of the other base transmitters. It will be appreciated that, alternatively, the pseudorandom sequence generator 216 can be arranged to provide a pseudorandom sequence that is different from that of other base transmitters 104 of the plurality of base transmitters by, for example, enabling different feedback taps on the pseudorandom sequence generators 216 associated with different base transmitters 104. In addition, the pseudorandom sequence generator 216 preferably has at least a predetermined minimum number of stages, e.g., 20 stages. This preference facilitates allowing the base transmitters 104 to be concurrently initialized with different seed values 226 derived, for example, from the serial number of the base transmitters 104. It also will be appreciated that, alternatively, the pseudorandom sequence generator 216 can be incorporated into the processing system 206, where its functions can be performed in software.

The transmitter element 208 is arranged such that the pseudorandom sequence generator 216 adjusts a cancellation-affecting parameter of the transmitter element 208 in accordance with the

DISH
Exhibit 1003 Page 316

pseudorandom sequence during a simulcast transmission from the base transmitter 104. More specifically, the transmitter element 208 preferably includes a conventional frequency modulator (not shown) coupled to the pseudorandom sequence generator 216 such that the pseudorandom sequence generator 216 adjusts the carrier frequency of the base transmitter 104 in accordance with the pseudorandom sequence. In the simplest case, the pseudorandom sequence generator 216 cooperates with the transmitter element 208 to adjust the carrier frequency of the base transmitter 104 to one of two levels, e.g., ±50 Hz, about a predetermined nominal carrier frequency. It will be appreciated that, alternatively, the pseudorandom sequence generator 216 and the transmitter element 208 can be arranged to adjust the carrier frequency to one of N predetermined levels in accordance with the pseudorandom sequence, N being an integer greater than unity. It will be further appreciated that, alternatively, the transmitter element 208 can be arranged such that another cancellation-affecting parameter of the base transmitter 104, e.g., the carrier phase or the carrier amplitude, is adjusted in accordance with the pseudorandom sequence, through well-known techniques. It also will be appreciated that, alternatively, the transmitter element 208 can be arranged such that the pseudorandom sequence generator 216 adjusts at least two cancellation-affecting parameters selected from a group of cancellation-affecting parameters consisting of the carrier frequency, the carrier phase, and the carrier amplitude. In addition, it will be appreciated that the pseudorandom sequence may have to be filtered to prevent instantaneous shifts of the cancellation-affecting parameter(s).

Preferably, the pseudorandom sequence generator 216 is further arranged to optimize a parameter of the plurality of pseudorandom sequences according to a characteristic of the communication protocol utilized by the messaging system, such that the intervals of destructive cancellation will exist only long enough to potentially destroy, i.e., change the value of, less than a predetermined number of bits, e.g., two bits, of a given (interleaved) code word, which will fall within the error correction capability of the protocol. This essentially moves the bit errors around, distributing them randomly such that the forward error correction is very likely to correct all the errors caused by the intervals of destructive cancellation.

DISH
Exhibit 1003 Page 317

For example, consider the FLEX protocol, which uses (32,21) BCH code words interleaved such that there are 5 ms intervals between bits corresponding to the same code word. Each block of interleaved code words lasts 160 ms. Consider the case of no dithering and no frequency offsets and a 1 Hz frequency error between two adjacent FM transmitters. The interval of destructive cancellation may last on the order of 100 ms, which will destroy most code word bits (exceeding the forward error correction capability) in 1 or 2 interleaved blocks of the transmission, yet leaving another 4 or 5 interleaved blocks error free. In this condition little benefit is derived from the forward error correction. Now consider the use of pseudorandom frequency dithering in accordance with the present invention, e.g., ± 50 Hz about a nominal frequency, with the duration of each dither set to 7.5 ms, for example. An interval of destructive cancellation lasting 7.5 ms and repeating no more frequently than every 160 ms will destroy, on average, 3/4 bit from each code word. If a random phase difference between two signals generates an interval of destructive cancellation with a probability of 0.1 (as derived further below), then, on average, a destructive phase condition will occur 1.6 times per code word in each block, advantageously allowing a greatly increased benefit from forward error correction coding.

Again referring to FIG. 2, the processing system 206 is further coupled to a conventional clock 202 for generating a timing signal for the base transmitter 104. The accuracy of the timing signal preferably is sufficient to maintain synchronization of the pseudorandom sequence generator 216 within a small time tolerance, e.g., 100 microseconds, between resynchronizations of the pseudorandom sequence generator 216. It will be appreciated that, alternatively, the timing signal can be derived from a Global Positioning Satellite (GPS) receiver. The processing system 206 is also coupled to a conventional input interface 214 for receiving the message via the communication link 106.

The processing system 206 comprises a conventional processor 210 and a conventional memory 212. The memory 212 includes locations for storing messages 222 received through the input interface 214 and, preferably, a pseudorandom sequence seed value 226 derived, for example, from a serial number uniquely assigned by the factory to the base transmitter 104. The memory 212 also includes software elements

DISH
Exhibit 1003 Page 318

for message processing 224 and pseudorandom sequence synchronization 228 in accordance with the present invention.

Referring to FIG. 3, a diagram 300 depicting amplitude (represented by length) and relative phase (θ) of two carriers A1, A2 offset in frequency in accordance with the present invention and received by a receiver at a reception point between two of the base transmitters 104. Assume, for example, that the frequency of the carrier A2 is higher than that of the carrier A1. The result is that the phase of A2 is changing faster with time than that of A1. Periodically, the relative phase θ at the receiver is such that A2 enters the shaded area defined as the zone of destructive cancellation 302. The zone of destructive cancellation 302 preferably is defined, by way of example, to correspond to

$$0.9\pi < \theta < 1.1\pi.$$

As θ traverses 2π for each full revolution, one can conclude that for a fixed, nonzero frequency difference between A1 and A2 the probability that A2 is in the zone of destructive cancellation 302 at a randomly chosen instant of time is P = 0.1. For a pseudorandomly varied frequency difference between A1 and A2 in accordance with the present invention the probability that A2 is in the zone of destructive cancellation 302 at a randomly chosen instant of time is also P = 0.1.

The instantaneous power at the receiver is

$$P(t) = (A1+A2\cos(\theta))^2 + (A2\sin(\theta))^2.$$

If A1 = A2 = 1, the average power is 2.0. At 0.9π and 1.1π the instantaneous power is approximately 0.1. Thus, within the defined zone of destructive cancellation 302 the instantaneous power is approximately 13 dB or more below the average power. While there is no way to prevent the two carriers A1 and A2 from entering the zone of destructive cancellation 302, it is highly desirable to minimize their stay in the zone, as is advantageously accomplished in accordance with the present invention, as described further below. It will be appreciated that, alternatively, other exemplary ranges of θ can be utilized to define the zone of destructive cancellation 302.

DISH
Exhibit 1003 Page 319

FIG. 4 is a flow chart 400 depicting operation of the messaging system in accordance with the present invention. The flow chart 400 begins with providing 402 the pseudorandom sequence generators 216 for the base transmitters 104. After the messaging system is powered up, the processing systems 206 access the seed values 226 corresponding to each of the base transmitters 104. The processing systems 206 then load 403 the seed values 226 and simultaneously restart the pseudorandom sequence generators 216. The restarting of the pseudorandom sequence generators 216 is preferably synchronized by the communication protocol to recur, for example, at the top of each hour. Concurrently restarting the pseudorandom sequence generators 216 periodically in this manner with different seed values 226 advantageously allows identical-sequence pseudorandom sequence generators 216 to be utilized for the base stations, while ensuring that the pseudorandom sequences contain sub-sequences that are different from one another during concurrent transmissions by the base transmitters 104 (due to the sequences being offset from one another by the different seed values 226). It will be appreciated that, alternatively, the pseudorandom sequence generators 216 can comprise different-sequence pseudorandom sequence generators to ensure that the pseudorandom sequences generated thereby are different from one base transmitter 104 to the next.

Next, the processing systems 206 preferably begin adjusting the carrier frequencies 404 of the corresponding transmitter elements 208 according to the pseudorandom sequences. Alternatively, the processing systems 206 can adjust another cancellation-affecting parameter, such as the carrier phases 406 and/or the carrier amplitudes 408 in addition to, or in lieu of, adjusting the carrier frequencies. For the case of frequency or phase adjustment, the processing systems 206 preferably are programmed to ensure a uniformly distributed phase between 0 and 2π. The processing systems 206 also check 410 whether it is time to resynchronize the pseudorandom sequence generators 216. If so, the flow returns to step 403. If not, the flow returns to the appropriate ones of the adjusting steps 404, 406 and 408.

Simulations in accordance with the present invention have demonstrated that by continuously adjusting a cancellation-affecting parameter of the base stations in accordance with the present invention, the intervals of destructive carrier cancellation advantageously are

DISH
Exhibit 1003 Page 320

limited in length and are randomly dispersed throughout the interleaved transmission blocks of the communication protocol, thereby substantially reducing the word error rate. The simulations have further demonstrated that no other carrier frequency offsetting technique is needed to meet performance objectives. In addition, by randomizing the starting points of the pseudorandom sequences through the use of seed values derived from a random number source, which can include the base station serial numbers, no additional system planning effort is required for adjusting the base stations relative to one another to limit carrier cancellation.

FIG. 5 is an electrical block diagram of an exemplary wireless communication system in accordance with the present invention, comprising a fixed portion 502 including a controller 512 and a plurality of base stations 516, the wireless communication system also including a plurality of receivers 522. The base stations 516 preferably communicate with the receivers 522 utilizing conventional radio frequency (RF) signals for sending simulcast transmissions in accordance with the present invention, as will be explained further below. The base stations 516 are coupled by communication links 514 to the controller 512, which controls the base stations 516.

The hardware of the controller 512 is preferably a combination of the Wireless Messaging Gateway (WMG™) Administrator! paging terminal, and the RF-Conductor!™ message distributor manufactured by Motorola, Inc., and includes software modified in accordance with the present invention. The base stations 516 comprise a transmitter preferably similar to the RF-Orchestra! transmitter, modified in accordance with the present invention, and can include, in two-way wireless communication systems, the RF-Audience!™ receiver manufactured by Motorola, Inc. The receivers 522 are preferably similar to the Advisor Gold™ and Pagefinder™ wireless communication units, also manufactured by Motorola, Inc. It will be appreciated that other similar hardware can be utilized as well for the controller 512, the base stations 516, and the receivers 522.

Each of the base stations 516 transmits RF signals to the receivers 522 via an antenna 518. The RF signals transmitted by the base stations 516 to the receivers 522 (outbound messages) comprise selective call addresses identifying the receivers 522, and voice and data messages originated by a caller, as well as commands originated by the controller 512 for adjusting operating parameters of the radio communication system.

DISH
Exhibit 1003 Page 321

The controller 512 preferably is coupled by telephone links 501 to a public switched telephone network (PSTN) 510 for receiving selective call message originations therefrom. Selective call originations comprising voice and data messages from the PSTN 510 can be generated, for example, from a conventional telephone 511 or a conventional computer 517 coupled to the PSTN 510. It will be appreciated that, alternatively, other types of communication networks, e.g., packet switched networks, the Internet, and local area networks, can be utilized as well for transporting originated messages to the controller 512.

The over-the-air protocol utilized for the transmissions is preferably selected from Motorola's well-known FLEX™ family of digital selective call signaling protocols. These protocols utilize well-known error detection and error correction techniques and are therefore tolerant to bit errors occurring during transmission, provided that the bit errors are not too numerous. It will be appreciated that other suitable protocols can be used as well. It will be further appreciated that, while one embodiment for practicing the present invention is a one-way wireless communication system, the present invention is applicable also to a two-way wireless communication system.

FIG. 6 is an electrical block diagram depicting an exemplary controller 512 in accordance with the present invention. The controller 512 comprises a network interface 618 for receiving a message from a message originator via the telephone links 501. The network interface 618 is coupled to a processing system 610 for controlling and communicating with the network interface 618. The processing system is coupled to a base station interface 604 for controlling and communicating with the base stations 516 via the communication links 514. The processing system 610 is also coupled to a conventional clock 630 for providing a timing signal to the processing system 610. The processing system 610 comprises a conventional computer 612 and a conventional mass medium 614, e.g., a magnetic disk drive, programmed with information and operating software in accordance with the present invention. The mass medium 614 comprises a subscriber database 620, including information about the receivers 522 controlled by the controller 512. The mass medium 614 also includes a message processing element 622 for programming the processing system 610 to process messages for the receivers 522 in a conventional manner. In accordance with the present invention, the mass medium 614 also includes a transmitter

DISH
Exhibit 1003 Page 322

output amplitude control element 624 for programming the processing system to control the transmitter 702 (FIG. 7) of the base stations 516 to change an output amplitude of the transmitter 702 during a portion of a time period during which simulcast transmissions are sent, thereby altering the intersymbol interference during the portion of the time period.

FIG. 7 is an electrical block diagram of an exemplary base station 516 in accordance with the present invention. The base station 516 comprises the antenna 518 for radiating a signal comprising a message. The antenna 518 is coupled to a transmitter 702 for transmitting the message. The transmitter 702 preferably comprises a conventional frequency shift keyed (FSK) transmitter element 708 for transmitting a first simulcast signal sent simultaneously with at least a second simulcast signal from another transmitter 702 (as coordinated by the controller 512 through well-known techniques). It will be appreciated that, alternatively, other types of transmitter elements for demodulating other types of modulated signals can be utilized as well for the transmitter element 708. The transmitter 702 further comprises a conventional amplitude modulator 703 coupled to the transmitter element 708 for changing an output amplitude of the transmitter 702 during a portion of the time period of the first simulcast signal, thereby altering the intersymbol interference at the receiver during the portion of the time period. The transmitter 702 is coupled to a processing system 706 for processing the message and for controlling the transmitter 702 in accordance with the present invention. A conventional controller interface 714 preferably is also coupled to the processing system 706 for interfacing with the controller 512 via the communication link 514 through well-known techniques. In addition, a conventional clock 707 is coupled to the processing system 706 for providing a timing signal thereto.

The processing system 706 comprises a conventional processor 710 and a conventional memory 712. The memory 712 comprises software elements and other variables for programming the processing system 706 in accordance with the present invention. The memory 712 includes a transmitter control element 722 for controlling the transmitter 702 through well-known techniques. In addition, the memory 712 includes a message processing element 724 for programming the processing system 706 to process the message in a conventional manner. The memory 712

DISH
Exhibit 1003 Page 323

further comprises a transmitter output amplitude control element 726 for cooperating with the modulator 703 to control the output amplitude of the transmitter 702 in accordance with the present invention, as described further below.

FIG. 8 is an exemplary timing diagram 800 depicting intersymbol interference in a prior art wireless communication system. The diagram 800 depicts amplitude versus time of a first signal 802 from a first simulcast transmitter and a second signal 804 from a second simulcast transmitter, the second signal 804 identical to, but delayed with respect to, the first signal 802. When the first and second signals 802, 804 are received by a receiver at nearly the same amplitudes, e.g., less than 4 dB of difference, the received signal 806 can comprise indeterminant areas 808 where the received bit cannot be decoded. When the indeterminant areas 808 occupy more than about 50% of the symbol period (corresponding to a differential delay of 25% of the symbol period), receiver sensitivity begins to be reduced slightly. When the indeterminant areas increase to 100% of the symbol period (corresponding to a differential delay of 50% of the symbol period), receiver sensitivity is reduced to zero.

FIG. 9 is an exemplary timing diagram 900 depicting reduced intersymbol interference in the wireless communication system in accordance with the present invention. The diagram 900 depicts amplitude versus time of a first signal 902 and a second signal 904. A "nominal" value of the amplitude of the first and second signals is represented by the dashed lines 910. Note that during a portion of the time period of the first and second signals 902, 904, the amplitude is changed above and/or below the nominal value, preferably by adjusting the output amplitude of the transmitter 702 by the modulator 703 under control of the processing system 706, in accordance with the present invention. When the nominal values of the first and second signals 902, 904 would be received by a receiver at nearly the same amplitudes, the advantageous effect of changing the output amplitudes of the first and second signals 904, 904 is demonstrated by the decoded signal 906. Note that the indeterminant areas 908 advantageously are reduced in number compared to the diagram 800. The reason for the reduced number of indeterminant areas 908 is that when the amplitudes of the first and second signals 902, 904 are different by more than about 4 dB, receiver

DISH
Exhibit 1003 Page 324

"capture" causes one of the signals to dominate, and the intersymbol interference goes away.

FIG. 10 is an exemplary protocol diagram 1000 in accordance with the present invention. This protocol is used by the controller 912 to communicate to the base station 916 how the transmitter 702 is to change its output amplitude during simulcast transmissions. The diagram 1000 comprises a synchronization portion 1002 for synchronizing the base station 916 with the communications of the controller 912, using well-known techniques. The diagram 1000 further comprises a type indication 1004 for indicating the message type, e.g., output amplitude control command. In addition, the diagram 1000 includes a command 1006 for controlling the output amplitude configuration of the base station transmitter 702. This protocol advantageously allows the base station 916 to be reconfigured from time to time with regard to how it changes the output amplitude of its transmissions in accordance with the present invention. As an alternative, the base station 916 can be pre-programmed, either in the field or during manufacture, with fixed instructions as to how the transmitter 702 should change its output amplitude during simulcast transmissions.

FIG. 11 is a flow diagram 1100 depicting operation of the exemplary wireless communication system in accordance with the present invention. The diagram 1100 preferably begins with the controller 912 communicating with the base station 916 to control 1102 the transmitter 1102 to change the output amplitude of its transmissions during a portion of the time period of each simulcast transmission. Simulations have shown that relatively small changes in the output amplitude, e.g. about ±0.5 dB, can produce a sizable, e.g., two to one, improvement in word error rate. Alternatively, the transmitter 1102 can be arranged 1104 during installation and setup, or during manufacture, to change the output amplitude during a portion of the time period of each simulcast transmission. However the transmitter 1102 is programmed, the controller 912 then controls the base stations 916 to send a simulcast transmission. The transmitter 1102 then performs 1106 according to its programmed instructions for changing the output amplitude. Preferably, the transmitter 1102 changes the output amplitude as a predetermined function of time, in synchronism with the symbols transmitted by the transmitter 1102.

DISH
Exhibit 1003 Page 325

In one embodiment, the transmitter 1102 is arranged such that the output amplitude of a central portion of each symbol does not change, while the output amplitude of non-central portions of the symbol do change. This technique exploits the fact that with normally encountered differential delay characteristics, intersymbol interference occurs primarily in the non-central portions of the symbols. In another embodiment, the transmitted signal comprises an error correcting code that can correct a predetermined number of errors in a code block, and the transmitter 1102 changes the output amplitude according to a pseudorandom sequence having a predetermined number of states, e.g., two states, during a transmission of the code block. In this embodiment, it is preferred that the transmitters 1102 in the wireless communication system utilize pseudorandom sequences that are offset from one another, so that different transmitters 1102 do not adjust their output amplitudes identically at every step of the sequence. In yet another embodiment, the transmitter 1102 is arranged to repeat a change to the output amplitude for a number of symbols, wherein the number of symbols is determined from an encoding characteristic employed by the wireless communication system, e.g., the length of an error correcting code block.

Regardless which embodiment in accordance with the present invention is used, an overall objective is to reduce errors due to intersymbol interference. When used with an error correcting code, the present invention often can reduce the number of received errors sufficiently to change an uncorrectable number of errors into a correctable number of errors, thereby advantageously salvaging a message which would otherwise have been corrupted.

Thus, it should be clear from the preceding disclosure that the present invention provides a method and apparatus for limiting the intervals of destructive cancellation during simulcast transmissions. The method and apparatus advantageously limits the intervals of destructive cancellation without utilizing the administratively difficult prior art technique of permanently offsetting the carrier frequencies of adjacent transmitters with respect to one another. In addition, the present invention provides a method and apparatus that advantageously reduces errors caused by intersymbol interference during a simulcast transmission when two or more simulcast signals are received at similar amplitudes with different transmission delays. The method and

DISH
Exhibit 1003 Page 326

apparatus operates without requiring a custom tuning adjustment during installation and system setup.

Many modifications and variations of the present invention are possible in light of the above teachings. Thus, it is to be understood that, within the scope of the appended claims, the invention can be practiced other than as described herein above for the exemplary embodiments.

What is claimed is:

DISH
Exhibit 1003 Page 327

CLAIMS

1. A method in a messaging system having a plurality of base transmitters, the method for limiting an interval of carrier cancellation at a reception point during a simulcast transmission, the method comprising the steps of:

providing a plurality of pseudorandom sequence generators for the plurality of base transmitters, the plurality of pseudorandom sequence generators arranged to ensure that they generate a plurality of pseudorandom sequences having sub-sequences that are different from one another during concurrent transmissions by the plurality of base transmitters; and

adjusting a cancellation-affecting parameter of the plurality of base transmitters in accordance with the plurality of pseudorandom sequences during the simulcast transmission from the plurality of base transmitters.

2. A base transmitter in a messaging system having a plurality of base transmitters, the base transmitter for limiting an interval of carrier cancellation at a reception point during a simulcast transmission, the base transmitter comprising:

a transmitter element for transmitting a message;

a processing system coupled to the transmitter element for controlling the transmitter element to transmit the message;

an input interface coupled to the processing system for receiving the message; and

a pseudorandom sequence generator coupled to the transmitter element, the pseudorandom sequence generator arranged to ensure that it generates a pseudorandom sequence having sub-sequences that are different from those generated in other ones of the plurality of base transmitters during concurrent transmissions by the plurality of base transmitters,

wherein the transmitter element is arranged such that the pseudorandom sequence generator adjusts a cancellation-affecting parameter of the transmitter element in accordance with the pseudorandom sequence during the simulcast transmission from the base transmitter.

DISH
Exhibit 1003 Page 328

3. The base transmitter of claim 2, wherein the transmitter element is further arranged such that the pseudorandom sequence generator adjusts a carrier frequency of the base transmitter.

4. The base transmitter of claim 2, wherein the transmitter element is further arranged such that the pseudorandom sequence generator adjusts a carrier phase of the base transmitter.

5. The base transmitter of claim 2, wherein the transmitter element is further arranged such that the pseudorandom sequence generator adjusts a carrier amplitude of the base transmitter.

6. The base transmitter of claim 2, wherein the transmitter element is further arranged such that the pseudorandom sequence generator adjusts at least two cancellation-affecting parameters selected from a group of cancellation-affecting parameters consisting of a carrier frequency, a carrier phase, and a carrier amplitude.

7. The base transmitter of claim 2, wherein the pseudorandom sequence generator is further arranged to optimize a parameter of the plurality of pseudorandom sequences according to a characteristic of a communication protocol utilized by the messaging system.

8. The base transmitter of claim 2, wherein the pseudorandom sequence generator is further arranged to provide a pseudorandom sequence identical to that of other base transmitters of the plurality of base transmitters but initialized, concurrently with the other base transmitters, with a seed value different from that of the other base transmitters.

9. The base transmitter of claim 2, wherein the pseudorandom sequence generator is further arranged to provide a pseudorandom sequence that is different from that of other base transmitters of the plurality of base transmitters.

DISH
Exhibit 1003 Page 329

10. The base transmitter of claim 2, wherein the pseudorandom sequence generator has at least a predetermined minimum number of stages.

11. The base transmitter of claim 2,

wherein the transmitter element is further arranged to adjust the cancellation-affecting parameter to one of N predetermined levels in accordance with the pseudorandom sequence, N being an integer greater than unity.

12. A method in a messaging system having a plurality of base transmitters, the method for limiting an interval of carrier cancellation at a reception point during a simulcast transmission, the method comprising the steps of:

providing a plurality of pseudorandom sequence generators for the plurality of base transmitters, the plurality of pseudorandom sequence generators arranged to generate a plurality of pseudorandom sequences having sub-sequences that have more than a predetermined probability of being different from one another during concurrent transmissions by the plurality of base transmitters, wherein a parameter of the plurality of pseudorandom sequences is optimized according to a characteristic of a communication protocol utilized by the messaging system; and

adjusting a cancellation-affecting parameter of the plurality of base transmitters in accordance with the plurality of pseudorandom sequences during the simulcast transmission from the plurality of base transmitters.

DISH
Exhibit 1003 Page 330

13. A method in a wireless communication system for reducing errors caused by intersymbol interference in at least two simulcast signals transmitted during a time period, the at least two simulcast signals received at similar amplitudes and having different transmission delays with respect to one another, the method comprising the steps of:

transmitting the at least two simulcast signals from a corresponding at least two transmitters; and

changing an output amplitude of at least one of the at least two transmitters during a portion of the time period, thereby altering the intersymbol interference during the portion of the time period.

14. A transmitter in a wireless communication system for reducing errors caused by intersymbol interference in at least two simulcast signals transmitted during a time period, the at least two simulcast signals received by a receiver at similar amplitudes and having different transmission delays with respect to one another, the transmitter comprising:

a transmitter element for transmitting a first simulcast signal sent simultaneously with at least a second simulcast signal from another transmitter; and

a modulator coupled to the transmitter element for changing an output amplitude of the transmitter during a portion of the time period, thereby altering the intersymbol interference at the receiver during the portion of the time period.

15. The transmitter of claim 14, wherein the modulator is arranged to change the output amplitude in synchronism with a symbol transmitted from the transmitter.

16. The transmitter of claim 14, wherein the modulator is arranged to change the output amplitude as a predetermined function of time.

DISH
Exhibit 1003 Page 331

17. The transmitter of claim 14,

wherein the modulator is arranged to change the output amplitude in synchronism with a symbol transmitted from the transmitter, such that the output amplitude of a central portion of the symbol does not change, while the output amplitude of non-central portions of the symbol do change.

18. The transmitter of claim 14,

wherein the first simulcast signal comprises an error correcting code that can correct a predetermined number of errors in a code block, and

wherein the modulator is arranged to change the output amplitude according to a pseudorandom sequence having a predetermined number of states during a transmission of the code block.

19. The transmitter of claim 14, wherein the modulator is arranged to repeat a change to the output amplitude for a number of symbols, wherein the number of symbols is determined from an encoding characteristic employed by the wireless communication system.

20. A controller in a wireless communication system for reducing errors caused by intersymbol interference in at least two simulcast signals transmitted during a time period, the at least two simulcast signals received at similar amplitudes and having different transmission delays with respect to one another, the controller comprising:

a network interface for receiving a message from a message originator;

a processing system coupled to the network interface for processing the message; and

a base station interface coupled to the processing system for controlling a transmitter to transmit one of the at least two simulcast signals,

wherein the processing system is programmed to control the transmitter to change an output amplitude of the transmitter during a portion of the time period, thereby altering the intersymbol interference during the portion of the time period.

DISH
Exhibit 1003 Page 332

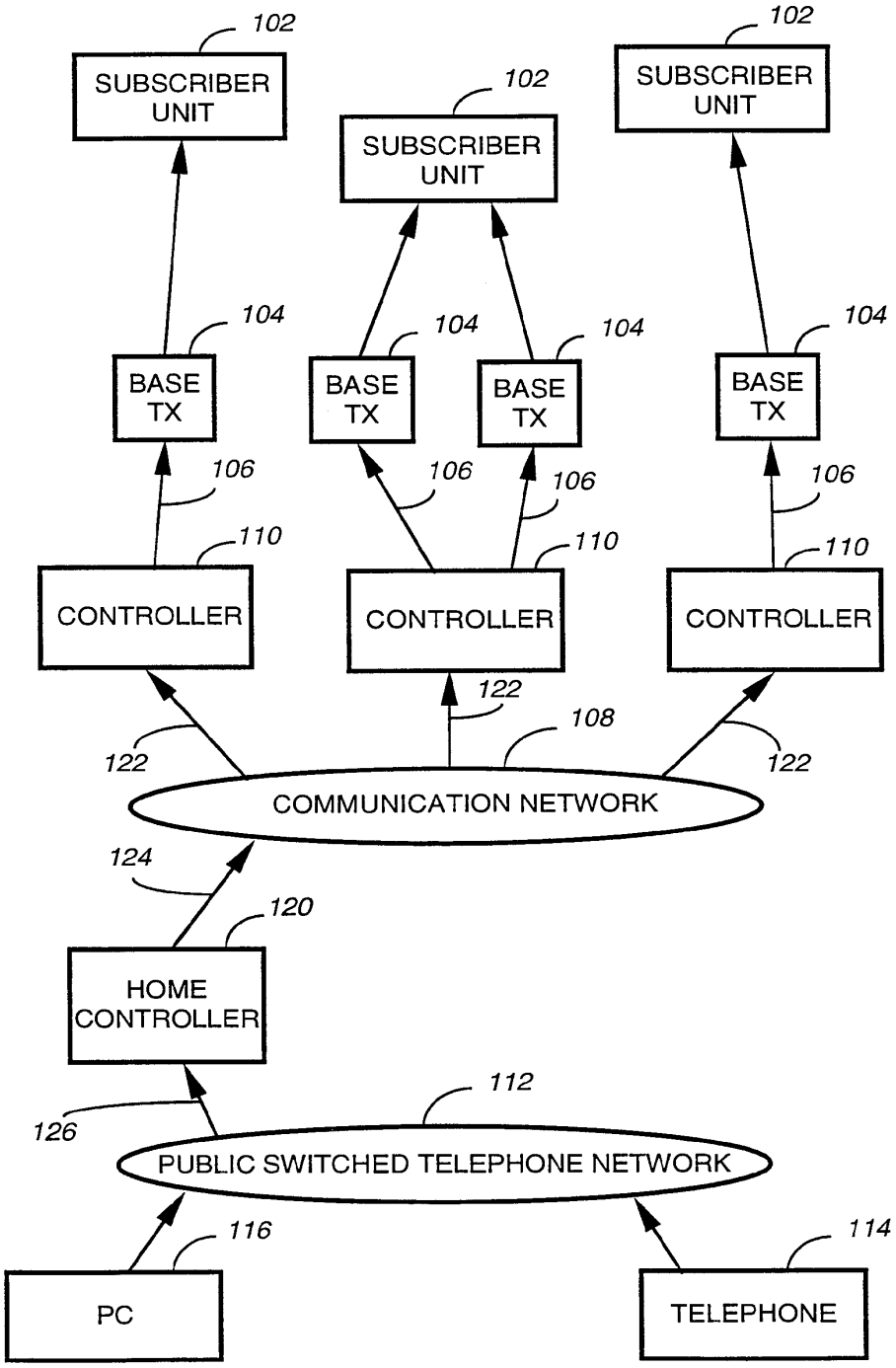
102
SUBSCRIBER UNIT
102
SUBSCRIBER UNIT
102
SUBSCRIBER UNIT
104
BASE TX
104
BASE TX
104
BASE TX
104
BASE TX
106
106
106
106
110
110
110
CONTROLLER
CONTROLLER
CONTROLLER
122
108
122
122
COMMUNICATION NETWORK
124
120
HOME CONTROLLER
112
126
PUBLIC SWITCHED TELEPHONE NETWORK
116
114
PC
TELEPHONE

FIG. 1

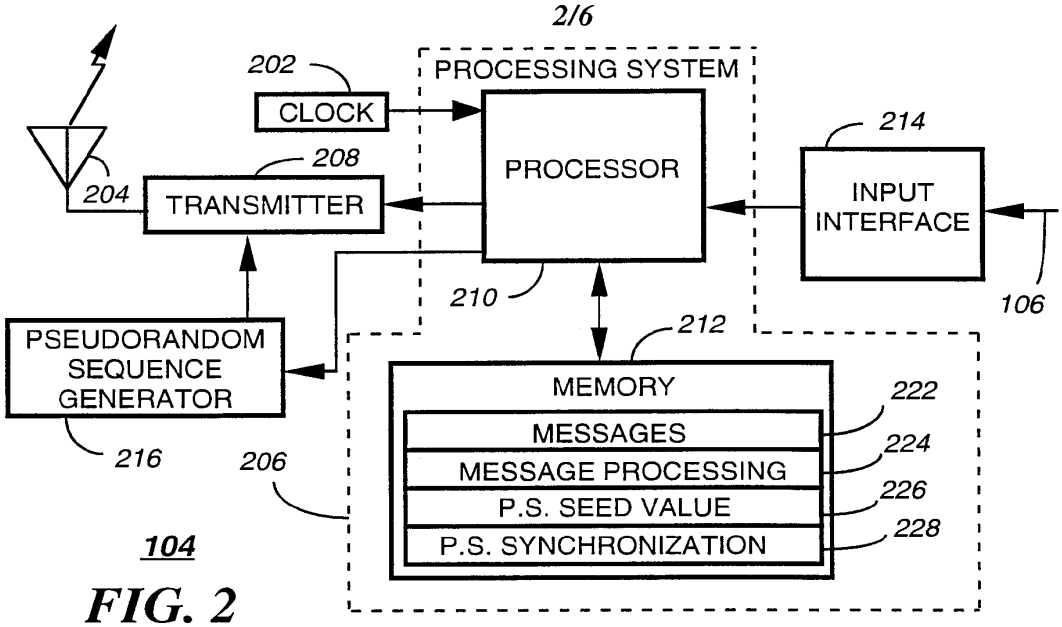
PROCESSING SYSTEM
202
CLOCK
PROCESSOR
214
INPUT INTERFACE
208
204
TRANSMITTER
106
210
212
PSEUDORANDOM SEQUENCE GENERATOR
MEMORY
222
MESSAGES
224
MESSAGE PROCESSING
226
P.S. SEED VALUE
228
P.S. SYNCHRONIZATION
216
206
104

FIG. 2

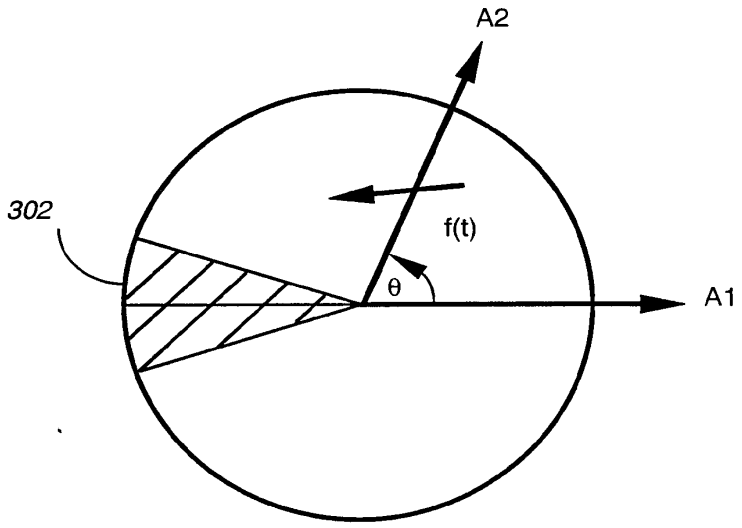
A2
302
f(t)
θ
A1
300

FIG. 3

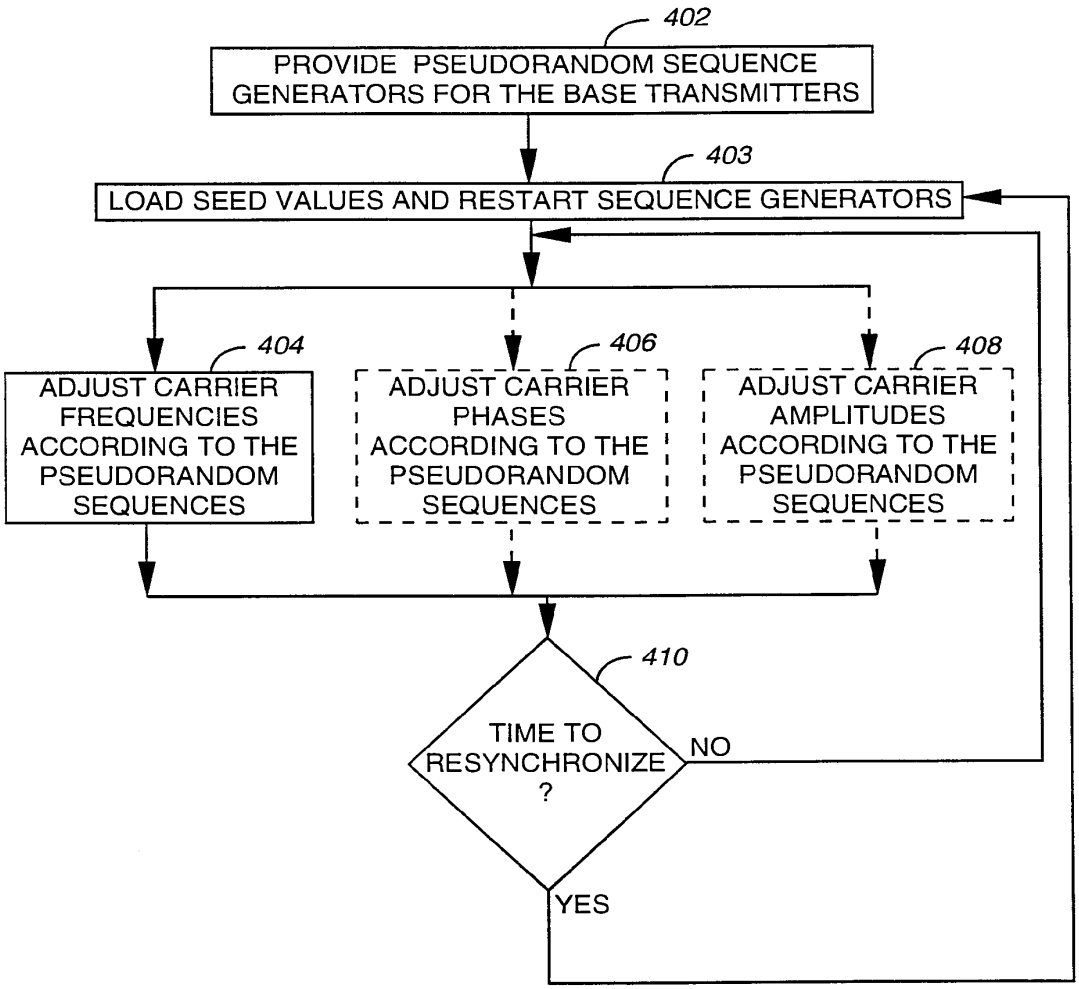
402
PROVIDE PSEUDORANDOM SEQUENCE GENERATORS FOR THE BASE TRANSMITTERS
403
LOAD SEED VALUES AND RESTART SEQUENCE GENERATORS
404
ADJUST CARRIER FREQUENCIES ACCORDING TO THE PSEUDORANDOM SEQUENCES
406
ADJUST CARRIER PHASES ACCORDING TO THE PSEUDORANDOM SEQUENCES
408
ADJUST CARRIER AMPLITUDES ACCORDING TO THE PSEUDORANDOM SEQUENCES
410
TIME TO RESYNCHRONIZE ?
NO
YES

400

FIG. 4

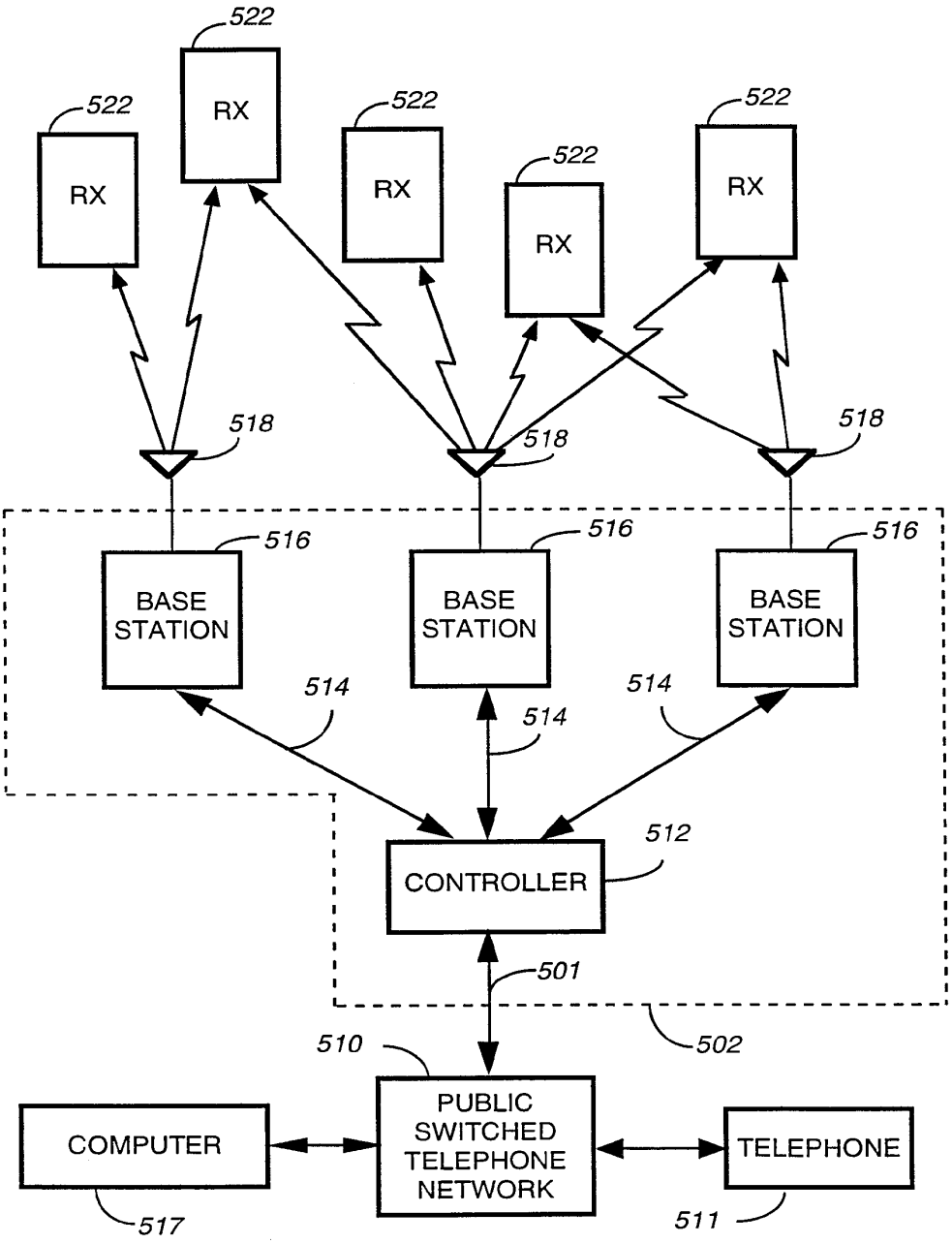
522
RX
522
RX
522
RX
522
RX
522
RX
518
518
518
516
516
516
BASE STATION
BASE STATION
BASE STATION
514
514
514
512
CONTROLLER
501
502
510
PUBLIC SWITCHED TELEPHONE NETWORK
COMPUTER
TELEPHONE
517
511

FIG. 5

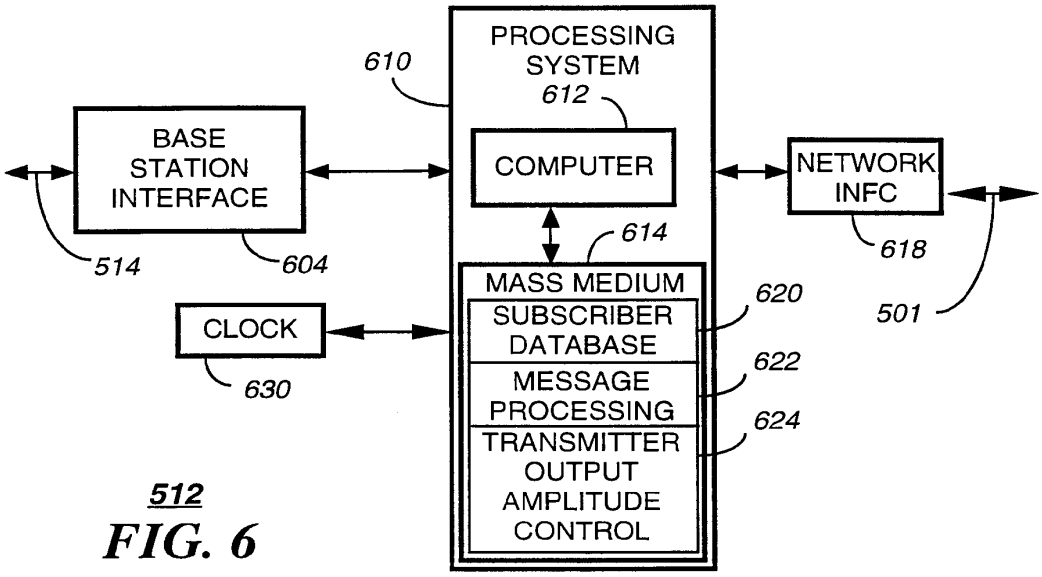

512

FIG. 6

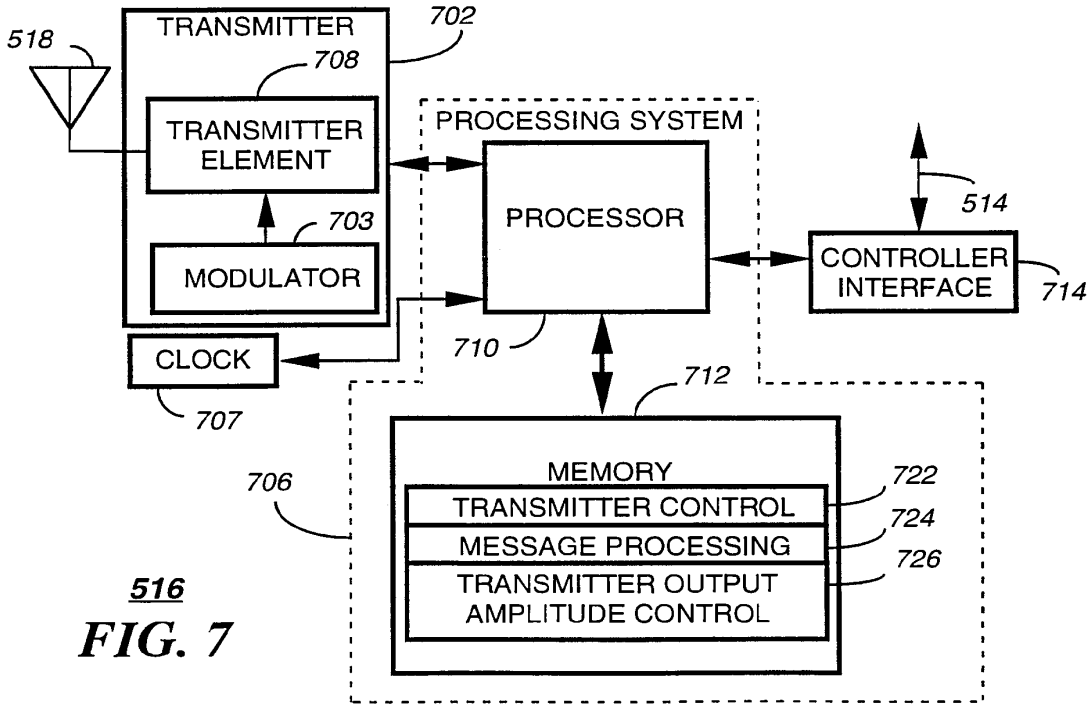

516

FIG. 7

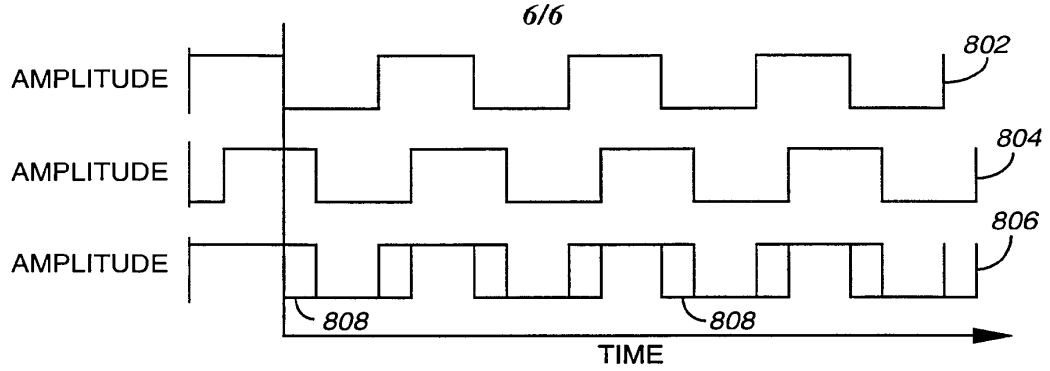

FIG. 8 800 PRIOR ART

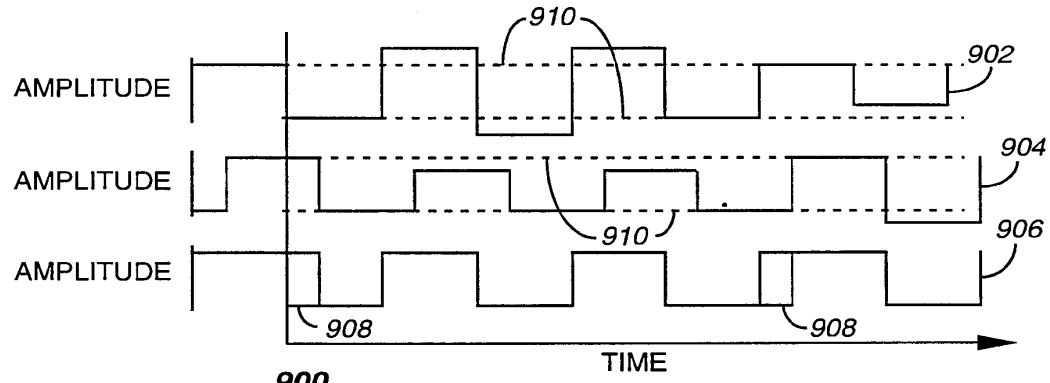

900 FIG. 9

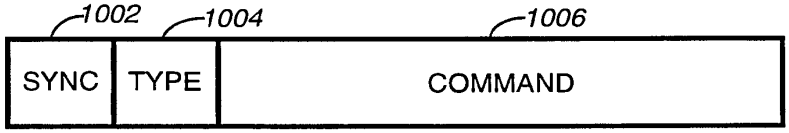

FIG. 10 1000

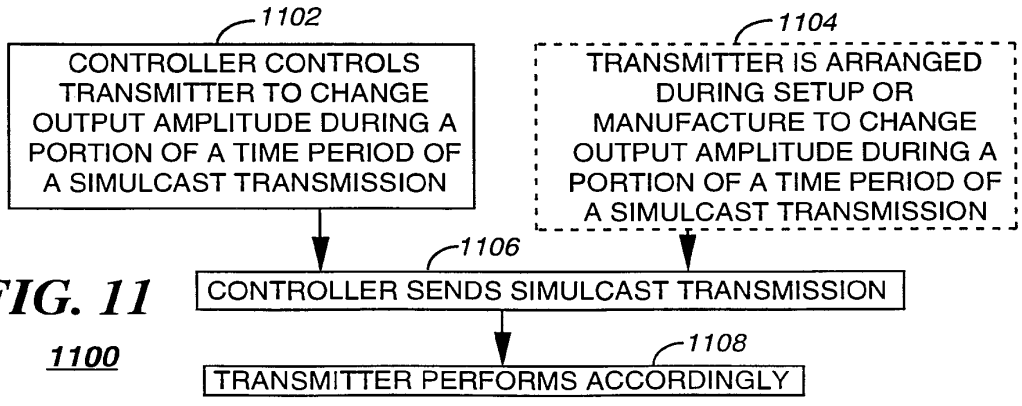

FIG. 11

1100

INTERNATIONAL SEARCH REPORT

International application No.
PCT/US98/22801

A. CLASSIFICATION OF SUBJECT MATTER

IPC(6) :H04B 7/005, 7/01, 7/015, 15/00
US CL : 455/503
According to International Patent Classification (IPC) or to both national classification and IPC

B. FIELDS SEARCHED

Minimum documentation searched (classification system followed by classification symbols)

U.S. : 455/503, 31.1, 31.2, 38.1, 59, 67.6; 340/825.44

Documentation searched other than minimum documentation to the extent that such documents are included in the fields searched

Electronic data base consulted during the international search (name of data base and, where practicable, search terms used)

C. DOCUMENTS CONSIDERED TO BE RELEVANT

Category*	Citation of document, with indication, where appropriate, of the relevant passages	Relevant to claim No.
A	US 5,392,452 A (DAVIS) 21 FEBRUARY 1995, see abstract	1-20
A,P	US 5,802,117 A (GHOSH) 01 SEPTEMBER 1998, see column 4, line 35 through column 9, line 12	1-20
A	US 5,353,307 A (LESTER et al.) 04 OCOTOBER 1994, see abstract.	1-20
A,P	US 5,737,322 A (BURBIDGE et aL.) 07 APRIL 7, 1998, see all	1-20
A	US 5,535,215 A (HIEATT, III) 09 JULY 1996, see figure 2	1-20

☐ Further documents are listed in the continuation of Box C. ☐ See patent family annex.

*	Special categories of cited documents:	"T"	later document published after the international filing date or priority date and not in conflict with the application but cited to understand the principle or theory underlying the invention
"A"	document defining the general state of the art which is not considered to be of particular relevance	"X"	document of particular relevance; the claimed invention cannot be considered novel or cannot be considered to involve an inventive step when the document is taken alone
"E"	earlier document published on or after the international filing date	"Y"	document of particular relevance; the claimed invention cannot be considered to involve an inventive step when the document is combined with one or more other such documents, such combination being obvious to a person skilled in the art
"L"	document which may throw doubts on priority claim(s) or which is cited to establish the publication date of another citation or other special reason (as specified)	"&"	document member of the same patent family
"O"	document referring to an oral disclosure, use, exhibition or other means		
"P"	document published prior to the international filing date but later than the priority date claimed		

Date of the actual completion of the international search 16 DECEMBER 1998	Date of mailing of the international search report 25 FEB 1999
Name and mailing address of the ISA/US Commissioner of Patents and Trademarks Box PCT Washington, D.C. 20231 Facsimile No. (703) 305-3230	Authorized officer DARNELL R. ARMSTRONG Telephone No. (703) 306-3015

Form PCT/ISA/210 (second sheet)(July 1992)★

PCT WORLD INTELLECTUAL PROPERTY ORGANIZATION
International Bureau

INTERNATIONAL APPLICATION PUBLISHED UNDER THE PATENT COOPERATION TREATY (PCT)

(51) International Patent Classification 6 :
H04L 27/26

A2

(11) International Publication Number: **WO 99/29078**

(43) International Publication Date: 10 June 1999 (10.06.99)

(21) International Application Number: PCT/SE98/02193

(22) International Filing Date: 1 December 1998 (01.12.98)

(30) Priority Data:
9704497–8 3 December 1997 (03.12.97) SE

(71) Applicant *(for all designated States except US)*: TELIA AB (publ) [SE/SE]; Mårbackagatan 11, S–123 86 Farsta (SE).

(72) Inventors; and
(75) Inventors/Applicants *(for US only)*: NORDSTRÖM, Tomas [SE/SE]; Praktikantvägen 8, S–977 53 Luleå (SE). BAHLENBERG, Gunnar [SE/SE]; Blidvägen 234, S–976 32 Luleå (SE). BENGTSSON, Daniel [SE/SE]; Forskarvägen 36 A, S–977 53 Luleå (SE). HÅKANSSON, Siwert [SE/SE]; Aprilvägen 10, S–177 61 Järfälla (SE). ISAKSSON, Anders [SE/SE]; Elevvägen 1, S–977 25 Luleå (SE). ISAKSSON, Mikael [SE/SE]; Borgmästarevägen 7, S–973 42 Luleå (SE). JOHANSSON, Magnus [SE/SE]; Timmermansgatan 34, S–972 41 Luleå (SE). LJUNGGREN, Lis–Marie [SE/SE]; Praktikantvägen 31, S–977 53 Luleå (SE). LUNDBERG, Hans [SE/SE]; Västra Solgatan 8, S–972 53 Luleå (SE). OLOFSSON, Sven–Rune [SE/SE]; Malmuddsvägen 9, S–972 45 Luleå (SE). OLSSON, Lennart [SE/SE]; Majvägen 39, S–973 31 Luleå (SE). STEFANSSON, Tomas [SE/SE]; Lulavan 773, S–961 93 Boden (SE). ÖHMAN, Hans [SE/SE]; Fältspatstigen 21, S–977 53 Luleå (SE). ÖKVIST, Göran [SE/SE]; Hagaplan 7, S–974 41 Luleå (SE).

(74) Agent: PRAGSTEN, Rolf; Telia Research AB, Vitsandsgatan 9, S–123 86 Farsta (SE).

(81) Designated States: EE, JP, LT, LV, NO, US, European patent (AT, BE, CH, CY, DE, DK, ES, FI, FR, GB, GR, IE, IT, LU, MC, NL, PT, SE).

Published
Without international search report and to be republished upon receipt of that report.

(54) Title: IMPROVEMENTS IN, OR RELATING TO, DATA SCRAMBLERS

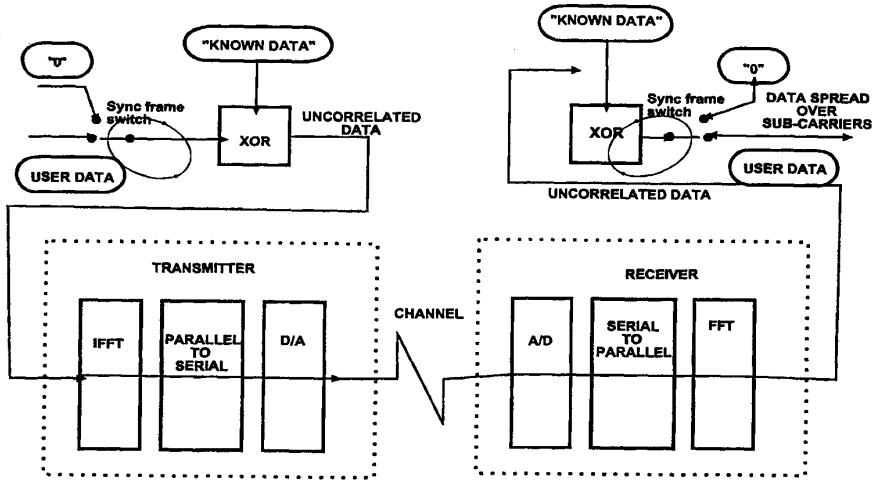

(57) Abstract

The present invention simplifies known data scramblers by making use of the synchronisation frames, normally used for measuring channel characteristics, as a source of pseudo–random data which can be combined with incoming user data. The present invention has particular application to multi–carrier transmission systems which employ DMT, or OFDM. Many of these transmission systems send known data, usually referred to as synchronisation frames, to measure channel characteristics such as signal to noise ratio. The known data contained in a synchronisation frame is selected to have a suitable statistical distribution, e.g. pseudo–random. In the data scrambler of the present invention, user data bits are combined with the known synchronisation frame data using an exclusive–OR function. This results in a statistically and computationally efficient scrambling of the user data.

FOR THE PURPOSES OF INFORMATION ONLY

Codes used to identify States party to the PCT on the front pages of pamphlets publishing international applications under the PCT.

AL	Albania	**ES**	Spain	**LS**	Lesotho	**SI**	Slovenia
AM	Armenia	**FI**	Finland	**LT**	Lithuania	**SK**	Slovakia
AT	Austria	**FR**	France	**LU**	Luxembourg	**SN**	Senegal
AU	Australia	**GA**	Gabon	**LV**	Latvia	**SZ**	Swaziland
AZ	Azerbaijan	**GB**	United Kingdom	**MC**	Monaco	**TD**	Chad
BA	Bosnia and Herzegovina	**GE**	Georgia	**MD**	Republic of Moldova	**TG**	Togo
BB	Barbados	**GH**	Ghana	**MG**	Madagascar	**TJ**	Tajikistan
BE	Belgium	**GN**	Guinea	**MK**	The former Yugoslav Republic of Macedonia	**TM**	Turkmenistan
BF	Burkina Faso	**GR**	Greece			**TR**	Turkey
BG	Bulgaria	**HU**	Hungary	**ML**	Mali	**TT**	Trinidad and Tobago
BJ	Benin	**IE**	Ireland	**MN**	Mongolia	**UA**	Ukraine
BR	Brazil	**IL**	Israel	**MR**	Mauritania	**UG**	Uganda
BY	Belarus	**IS**	Iceland	**MW**	Malawi	**US**	United States of America
CA	Canada	**IT**	Italy	**MX**	Mexico	**UZ**	Uzbekistan
CF	Central African Republic	**JP**	Japan	**NE**	Niger	**VN**	Viet Nam
CG	Congo	**KE**	Kenya	**NL**	Netherlands	**YU**	Yugoslavia
CH	Switzerland	**KG**	Kyrgyzstan	**NO**	Norway	**ZW**	Zimbabwe
CI	Côte d'Ivoire	**KP**	Democratic People's Republic of Korea	**NZ**	New Zealand		
CM	Cameroon			**PL**	Poland		
CN	China	**KR**	Republic of Korea	**PT**	Portugal		
CU	Cuba	**KZ**	Kazakstan	**RO**	Romania		
CZ	Czech Republic	**LC**	Saint Lucia	**RU**	Russian Federation		
DE	Germany	**LI**	Liechtenstein	**SD**	Sudan		
DK	Denmark	**LK**	Sri Lanka	**SE**	Sweden		
EE	Estonia	**LR**	Liberia	**SG**	Singapore		

Improvements in, or Relating to, Data Scramblers

The present invention relates to data scramblers and descramblers, suitable for use with a multi-carrier transmission system, multi-carrier transmission systems incorporating data scramblers and de-scramblers, and methods for scrambling and descrambling data in multi-carrier transmission systems.

Most telecommunications transmission systems are designed to give optimum performance when uncorrelated data is transmitted over them. Unfortunately, user data is not usually uncorrelated and may, for example, include relatively long strings of binary "0"s, or "1"s. If such data is transmitted over a transmission system intended for uncorrelated data, it can result in saturation, i.e. too large a dynamic range, synchronisation drift, etc.. This problem has long been recognised by telecommunications engineers and the conventional solution is to scramble the incoming user data so that it behaves as though it was uncorrelated data.

Known data scramblers employ an algorithm to combine user data with a random data string, thereby producing an uncorrelated data stream for transmission.

The present invention simplifies known data scramblers by making use of the synchronisation frames, normally used for measuring channel characteristics, as a source of pseudo-random data which can be combined with incoming user data.

The present invention has particular application to multi-carrier transmission systems, including copper based transmission systems such as ADSL, VDSL and HDSL which employ DMT, and/or radio based transmission systems employing OFDM. Many of these transmission systems send known data, usually referred to as synchronisation frames, to measure channel characteristics such as signal to noise ratio. The known data contained in a synchronisation frame is selected to have a suitable statistical distribution, e.g. pseudo-random. In a typical DMT

system, used at the present time, the known synchronisation frame data comprises two bits per sub-carrier. In other words, a predetermined 4-QAM signal is transmitted on each sub-carrier.

In the present invention, user data bits are combined with the known synchronisation frame data bits, typically the two most significant bits, using an exclusive-OR function. This results in a statistically and computationally efficient scrambling of the user data.

According to a first aspect of the present invention, there is provided a data scrambler, for use in a multi-carrier transmission system in which synchronisation frame data is periodically transmitted from a transmitter to a receiver to measure transmission channel characteristics, characterised in that combiner means are provided to combine user data with frame synchronisation data.

Said combiner means may have a XOR function.

Said frame synchronisation data is pseudo random.

Said combiner means may be adapted to combine said user data with the two most significant bits of a synchronisation frame.

According to a second aspect of the present invention, there is provide a data descrambler, for use in a multi-carrier transmission system in which synchronisation frame data is periodically transmitted from a transmitter to a receiver to measure transmission channel characteristics, and transmitted data is scrambled using a data scrambler as claimed in any of claims 1 to 4, characterised in that combiner means are provided to combine received data with frame synchronisation data.

Said combiner means may have a XOR function.

Said frame synchronisation data may be pseudo random.

Said combiner means may be adapted to combine said received data with the two most significant bits of a synchronisation frame.

According to a third aspect of the present invention, there is provided a multi-carrier transmission system in which synchronisation frame data is periodically transmitted from a transmitter to a receiver to measure transmission channel characteristics, characterised in that said transmission system incorporates a data scrambler as set forth in any preceding paragraph, connected to said transmitter.

Said receiver may be connected to a data descrambler as set forth in any preceding paragraph.

Said multi-carrier transmission system may employ DMT.

Said multi-carrier transmission system may employ OFDM.

Means may be provided for transmitting frame synchronisation data from said data scrambler to said data descrambler.

According to a fourth aspect of the present invention, there is provided, In a multi-carrier transmission system in which synchronisation frame data is periodically transmitted from a transmitter to a receiver to measure transmission channel characteristics, a method of scrambling user data prior to transmission, characterised by combining user data with frame synchronisation data.

User data maybe combined with frame synchronisation data by mean of an XOR function.

Said frame synchronisation data may be pseudo random.

Said user data may be combined with the two most significant bits of a synchronisation frame.

According to a fifth aspect of the present invention, there is provided, In a multi-carrier transmission system in which synchronisation frame data is periodically transmitted from a transmitter to a receiver to measure transmission channel characteristics, a method of descrambling received data which has been scrambled by a scrambling method as set forth in preceding, characterised by combining received data with frame synchronisation data.

Received data may be combined with frame synchronisation data using an XOR function.

Said frame synchronisation data may be pseudo random.

Said received data may be combined with the two most significant bits of a synchronisation frame.

Said multi-carrier transmission system may employ DMT.

Said multi-carrier transmission system may employ OFDM.

Embodiments of the invention will now be described, by way of example, with reference to the accompanying drawing, in which:

Figure 1 illustrates data scramblers and descramblers, according to the present invention, in a multi-carrier transmission system

In order to facilitate an understanding of the present invention a glossary of terms used in the description of the present invention is provided below:

A/D: Analogue to Digital

ADSL: Asynchronous Digital Subscriber Line

D/A: Digital to Analogue

DMT: Digital Multi Tone

FFT: Fast Fourier Transform

HDSL: High bit rate Digital Subscriber Line

IFFT: Inverse Fast Fourier Transform

OFDM: Orthogonal Frequency Division Multiplex

QAM: Quadrature Amplitude Modulation

VDSL: Very high bit rate Digital Subscriber Line

XOR: Exclusive OR

Figure 1 shows a transmitter and receiver, in a multi-carrier transmission system, linked by a communications channel. The communications channel may be a copper pair (VDSL etc.), or a radio channel (OFDM). Incoming user data, intended for transmission over the communications channel, is passed via a sync frame switch, to a XOR gate. The sync frame switch permits one of the inputs to the XOR gate to be switched between user data and a string of "0"s. The second input to the XOR gate receives the known synchronisation frame data. When the string of "0"s is passed to the XOR gate, the output from the XOR gate is the synchronisation data, i.e. the "known data" appears at the output of the XOR gate.

The incoming user data will almost certainly be far from random, i.e. it will be highly correlated. The incoming user data is combined with the "known data" in the XOR gate. The "known data" is pseudo random, i.e. uncorrelated. The output from the XOR gate will, therefore, also be uncorrelated, i.e. will itself be pseudo-random. This data has the necessary properties to permit good transmission over the transmission channel.

The scrambled data is then passed to the receiver where it is first

processed by an Inverse Fast Fourier Transform unit, IFFT, converted from parallel form to serial form, passed to a digital to analogue convertor, D/A, prior to QAM modulation and transmission over the channel. Details of the multiplexing techniques and modulation techniques used in multi-carrier transmission systems will be familiar to those skilled in the art and are not described in detail in this patent specification.

The signal received from the transmission channel is demodulated and demultiplexed in the receiver by, inter alia, an A/D convertor, a serial to parallel convertor, and a fast Fourier transform unit FFT. The received data is, of course, scrambled. The received scrambled data is passed to the XOR gate, where it is combined with the "known data", i.e. the same data that was mixed into the signal in the transmitter. The output from the XOR gate will contain the user data, or a string of "0"s depending on the setting of the sync frame switch in the transmitter. The sync frame switch in the receiver is used for synchronisation purposes, i.e. when the receiver is properly synchronised with the transmitter, and a sync frame is transmitted, rather than user data, the output from the XOR gate will be a string of "0"s. Details of transmitter and receiver synchronisation in multi-carrier systems will be well known to those skilled in the art.

It should, however, be noted that synchronisation frame data is stored in both the transmitter and receiver, so the receiver always has prior knowledge of the "known data" used by the transmitter.

In summary, the present invention scrambles user data by mixing that data with known data normally used in a synchronisation frame, typically the two most significant bits of the synchronisation frame data, using an exclusive-OR function. This results in both statistically and computationally efficient scrambling. Descrambling is achieved by the reverse process, i.e. combining the received scrambled data with the same known data used for scrambling in an exclusive-OR function.

The present invention results in a much improved statistical distribution of modulated sub-carriers, in a multi-carrier transmission system, compared to the

case where no scrambling is used for correlated, or null data situations.

As synchronisation data must be present in a multi-carrier receiver and transmitter for use in the synchronisation process, the scrambling technique of the present invention does not increase system complexity.

Transmission of the known data is very simple because it only needs to be combined with a string of "0"s.

The scrambler of the present invention can be used in all transmission systems that measure channel characteristics by sending known data from transmitter to receiver and use OFDM, DMT, or related multiplexing techniques to spread out the transmitted data over a number of sub-carriers, i.e. multi-carrier transmission techniques.

CLAIMS

1. A data scrambler, for use in a multi-carrier transmission system in which synchronisation frame data is periodically transmitted from a transmitter to a receiver to measure transmission channel characteristics, characterised in that combiner means are provided to combine user data with frame synchronisation data.

2. A data scrambler, as claimed in claim 1, characterised in that said combiner means has a XOR function.

3. A data scrambler, as claimed in either claim 1, or claim 2, characterised in that said frame synchronisation data is pseudo random.

4. A data scrambler, as claimed in any previous claim, characterised in that said combiner means is adapted to combine said user data with the two most significant bits of a synchronisation frame.

5. A data descrambler, for use in a multi-carrier transmission system in which synchronisation frame data is periodically transmitted from a transmitter to a receiver to measure transmission channel characteristics, and transmitted data is scrambled using a data scrambler as claimed in any of claims 1 to 4, characterised in that combiner means are provided to combine received data with frame synchronisation data.

6. A data descrambler, as claimed in claim 5, characterised in that said combiner means has a XOR function.

7. A data descrambler, as claimed in either claim 5, or claim 6, characterised in that said frame synchronisation data is pseudo random.

8. A data descrambler, as claimed in any of claims 5 to 7, characterised in that said combiner means is adapted to combine said received data with the two

most significant bits of a synchronisation frame.

9. A multi-carrier transmission system in which synchronisation frame data is periodically transmitted from a transmitter to a receiver to measure transmission channel characteristics, characterised in that said transmission system incorporates a data scrambler as claimed in any of claims 1 to 4, connected to said transmitter.

10. A multi-carrier transmission system, as claimed in claim 9, characterised in that said receiver is connected to a data descrambler as claimed in any of claims 5 to 8.

11. A multi-carrier transmission system, as claimed in claim 10, characterised in that said multi-carrier transmission system employs DMT.

12. A multi-carrier transmission system, as claimed in claim 10, characterised in that said multi-carrier transmission system employs OFDM.

13. A multi-carrier transmission system, as claimed in any of claims 10 to 12, characterised in that means are provided for transmitting frame synchronisation data from said data scrambler to said data descrambler.

14. In a multi-carrier transmission system in which synchronisation frame data is periodically transmitted from a transmitter to a receiver to measure transmission channel characteristics, a method of scrambling user data prior to transmission, characterised by combining user data with frame synchronisation data.

15. A method, as claimed in claim 14, characterised by combining user data with frame synchronisation data by mean of an XOR function.

16. A method, as claimed in either claim 14, or claim 15, characterised by said frame synchronisation data being pseudo random.

17. A method, as claimed in any of claims 14 to 16, characterised by combining

said user data with the two most significant bits of a synchronisation frame.

18. In a multi-carrier transmission system in which synchronisation frame data is periodically transmitted from a transmitter to a receiver to measure transmission channel characteristics, a method of descrambling received data which has been scrambled by the method claimed in any of claims 14 to 17, characterised by combining received data with frame synchronisation data.

19. A method, as claimed in claim 18, characterised by combining received data with frame synchronisation data using an XOR function.

20. A method, as claimed in either claim 18, or claim 19, characterised by said frame synchronisation data being pseudo random.

21. A method, as claimed in any of claims 18 to 20, characterised by combining said received data with the two most significant bits of a synchronisation frame.

22. A method, as claimed in any of claims 14 to 21, characterised by said multi-carrier transmission system employing DMT.

23. A method, as claimed in any of claims 14 to 21, characterised by said multi-carrier transmission system employing OFDM.

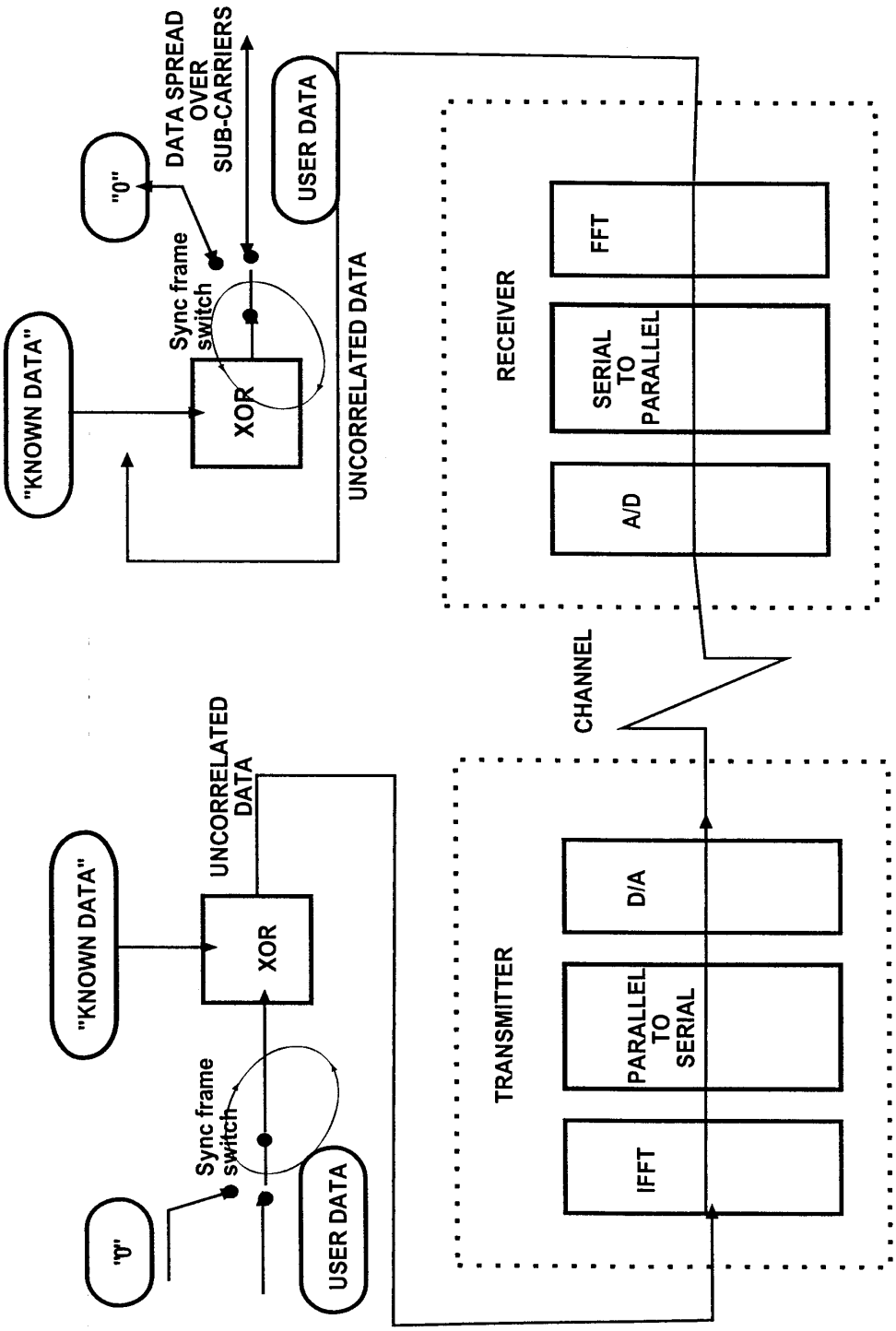
"KNOWN DATA"
XOR
Sync frame switch
"0"
DATA SPREAD OVER SUB-CARRIERS
USER DATA
UNCORRELATED DATA
RECEIVER
FFT
SERIAL TO PARALLEL
A/D
CHANNEL
TRANSMITTER
D/A
PARALLEL TO SERIAL
IFFT
"KNOWN DATA"
XOR
UNCORRELATED DATA
Sync frame switch
"0"
USER DATA

FIGURE 1

PATENT COOPERATION TREA. .

From the INTERNATIONAL SEARCHING AUTHORITY

PCT

INVITATION TO PAY ADDITIONAL FEES

(PCT Article 17(3)(a) and Rule 40.1)

To:
TESTA, HURWITZ & THIBEAULT, L.L.P.
Attn. Rodriguez, M. A.
High Street Tower
125 High Street
Boston, Massachusetts 02110
UNITED STATES OF AMERICA

Applicant's or agent's file reference AWR-017PC 081513-49	Date of mailing *(day/month/year)* 23/03/2001
International application No. PCT/US 00/ 30958	**PAYMENT DUE** within 45 ~~months~~/days from the above date of mailing
Applicant AWARE, INC.	International filing date *(day/month/year)* 09/11/2000

1. This International Searching Authority

(i) considers that there are 3 *(number of)* inventions claimed in the international application covered by the claims indicated ~~below~~/on the extra sheet:

and it considers that the international application does not comply with the requirements of unity of invention (Rules 13.1, 13.2 and 13.3) for the reasons indicated ~~below~~/on the extra sheet:

(ii) [X] has carried out a partial international search (see Annex) [ ] will establish the international search report on those parts of the international application which relate to the invention first mentioned in claims Nos.:
1-13,20-30,37-38

(iii) will establish the international search report on the other parts of the international application only if, and to the extent to which, additional fees are paid

2. The applicant is hereby **invited,** within the time limit indicated above, to pay the amount indicated below:

EUR 945,00	x	2	=	EUR 1.890,00
Fee per additional invention		number of additional inventions		total amount of additional fees
Or, _____	x	_____	=	_____

The applicant is informed that, according to Rule 40.2(c), **the payment of any additional fee may be made under protest,** i.e., a reasoned statement to the effect that the international application complies with the requirement of unity of invention or that the amount of the required additional fee is excessive.

3. [ ] Claim(s) Nos. _____ have been found to be unsearchable under Article 17(2)(b) because of defects under Article 17(2)(a) and therefore have not been included with any invention.

Name and mailing address of the International Searching Authority	Authorized officer
European Patent Office, P.B. 5818 Patentlaan 2 NL-2280 HV Rijswijk Tel. (+31-70) 340-2040, Tx. 31 651 epo nl, Fax: (+31-70) 340-3016	Hans Pettersson

Form PCT/ISA/206 (July 1992)

INVITATION TO PAY ADDITIONAL FEES

International application No.
PCT/US 00/30958

This International Searching Authority found multiple (groups of) inventions in this international application, as follows:

1. Claims: 1-13,20-30, 37-38

   carrier phase scrambling

2. Claims: 14-19,31-36

   information throughput improvement

3. Claim : 39

   error correction

The prior art document D1 has been identified as patent EP719004, "OFDM system with additional protection again multipath effects", published the 26.06.1996.
This document describes an OFDM system which uses a pseudo-random signal generator for rotating the phase of the OFDM carriers .

Here follows an analysis of the claims:

Claims 1-3, 6-12, 20,21,24-30, 37-38:
The subject matter of these claims has been entirely disclosed by the prior art document, then the new features with respect to the prior art have to be searched within the dependent claims 4-5, 13-19, 22-23, 31-36, 39

Claims 4, 5, 13, 22, 23 :
the New Features with respect to the prior art are: the transmission of the rotation data to the receiver, the synchronization of the transmitter and the receiver through the transmission of the rotation data, the additional digital bit scrambling of the data source.
Considering D1 and Rule 13.2 PCT the previous New Features must be considered Special Technical Features.
The objective problem solved by these Special Technical Features is to avoid the loss of synchronization between the transmitter and the receiver.

Claims 14-19, 31-36:
the New Feature with respect to the prior art is:
sending of a predetermined signal when clipping is detected.
Considering D1 and Rule 13.2 PCT the previous New Feature must be considered a Special Technical Feature.
The objective problem solved by this Special Technical Feature is to assure an information throughput during the clipping event.

Claim 39:
the New Features with respect to the prior art are: comparison of the DMT received signal with a predetermined one, discard/demodulate the received signal in accordance with the previous comparison.
Considering D1 and Rule 13.2 PCT the previous New Features must be

DISH
Exhibit 1003 Page 354

considered Special Technical Features.
The objective problem solved by these Special Technical Features is to error correct the received signal.

Being the objective problems solved by the different groups of claims different and being the Special Technical Features of the different groups nor the same nor corresponding, the subject application shows a lack of unity and 3 different inventions can be individuated.

1st invention : claims 1 (and dependent 2-13), 20 (and dep. 21-30), 37 (and dep. 38).

2nd invention : claims 1 (and dep. 14-19), 20 (and dep. 31-36)

3rd invention : claim 39

Ar : to Form PCT/ISA/206
COMMUNICA..ON RELATING TO THE RESULTS
OF THE PARTIAL INTERNATIONAL SEARCH

International Application No
PCT/US 00/30958

1. The present communication is an Annex to the invitation to pay additional fees (Form PCT/ISA/206). It shows the results of the international search established on the parts of the international application which relate to the invention first mentioned in claims Nos.:
1-13,20-30,37,38
2. This communication is not the international search report which will be established according to Article 18 and Rule 43.

3. If the applicant does not pay any additional search fees, the information appearing in this communication will be considered as the result of the international search and will be included as such in the international search report.

4. If the applicant pays additional fees, the international search report will contain both the information appearing in this communication and the results of the international search on other parts of the international application for which such fees will have been paid.

C. DOCUMENTS CONSIDERED TO BE RELEVANT

Category °	Citation of document, with indication, where appropriate, of the relevant passages	Relevant to claim No.
X	EP 0 719 004 A (MATSUSHITA ELECTRIC IND CO LTD) 26 June 1996 (1996-06-26) column 3, line 28 - line 46 column 14, line 39 - line 55	1-3, 6-12,20, 21, 24-30, 37,38
Y	column 16, line 4 - line 6	13
Y	WO 99 29078 A (BAHLENBERG GUNNAR ;HAAKANSSON SIWERT (SE); LJUNGGREN LIS MARIE (SE) 10 June 1999 (1999-06-10) page 5, line 18 - line 23	13
X	BAUML R W ET AL: "REDUCING THE PEAK-TO-AVERAGE POWER RATIO OF MULTICARRIER MODULATIONBY SELECTED MAPPING" ELECTRONICS LETTERS,GB,IEE STEVENAGE, vol. 32, no. 22, 24 October 1996 (1996-10-24), pages 2056-2057, XP000643915 ISSN: 0013-5194 page 2056, right-hand column, paragraphs 7,8 -page 2057, left-hand column, paragraph 3	1,2,4,5, 20,22, 23,37,38
A	WO 98 32065 A (FORTRESS TECHNOLOGIES INC) 23 July 1998 (1998-07-23) page 16, line 30 -page 17, line 3	8-12, 26-30

-/--

[X] Further documents are listed in the continuation of box C.

[X] Patent family members are listed in annex.

° Special categories of cited documents :

"A" document defining the general state of theart which is not considered to be of particular relevance

"E" earlier document but published on or after theinternational filing date

"L" document which may throw doubts on priority claim(s) or which is cited to establish the publication date of another citation or other special reason (as specified)

"O" document referring to an oral disclosure, use, exhibition or other means

"P" document published prior to the internationalfiling date but later than the priority date claimed

"T" later document published after theinternational filing date or priority date and not in conflict with theapplication but cited to understand the principle or theoryunderlying the invention

"X" document of particular relevance; the claimedinvention cannot be considered novel or cannot be considered to involve an inventive step when the document is taken alone

"Y" document of particular relevance; the claimedinvention cannot be considered to involve an inventive step when the document is combined with one or more othersuch documents, such combination being obvious to a person skilled in the art.

"&" document member of the same patent family

1

Form PCT/ISA/206 (Annex, first sheet) (July 1992)

DISH
Exhibit 1003 Page 356

Ar to Form PCT/ISA/206
COMMUNICATION RELATING TO THE RESULTS
OF THE PARTIAL INTERNATIONAL SEARCH

International Application No
PCT/US 00/30958

C.(Continuation) DOCUMENTS CONSIDERED TO BE RELEVANT

Category °	Citation of document, with indication,where appropriate, of the relevant passages	Relevant to claim No.
A	WO 99 22463 A (MOTOROLA INC) 6 May 1999 (1999-05-06) page 7, line 29 - line 32	8-12, 26-30

1

Form PCT/ISA/206 (Annex, continuation sheet)(July 1992)

DISH
Exhibit 1003 Page 357

Patent Family Annex

Information on patent family members

International Application No
PCT/US 00/30958

Patent document cited in search report	Publication date	Patent family member(s)	Publication date
EP 0719004 A	26-06-1996	JP 8321820 A	03-12-1996
		US 5682376 A	28-10-1997
WO 9929078 A	10-06-1999	SE 9704497 A	04-06-1999
WO 9832065 A	23-07-1998	AU 5811598 A	07-08-1998
		EP 0951767 A	27-10-1999
WO 9922463 A	06-05-1999	US 6044276 A	28-03-2000
		US 6061574 A	09-05-2000

Form PCT/ISA/206 (patent family annex) (July 1992)

PATENT COOPERATION TREA. Y

RECEIVED
NOV 20 2001
NIXON PEABODY

From the
INTERNATIONAL PRELIMINARY EXAMINATION AUTHORITY

_ Fax nr: 703-883-0370
_ 2 pages -

To:

VICK, Jason H.
Nixon Peabody LLP
8180 Greensboro Drive,Suite 800
McLean,Virginia 22102
ETATS-UNIS D'AMERIQUE

Confirmation
FAX-Bestätigung

PCT

INVITATION TO RESTRICT OR
TO PAY ADDITIONAL FEES

(PCT Article 34(3) (a) and Rule 68.2)

Date of mailing *(Day/month/year)*	14.11.2001
REPLY OR PAYMENT DUE	within 1 month(s) from the above date of mailing

Applicant's or agent's file reference		
081513-49		
International application No.	International filing date *(day/month/year)*	Priority date *(day/month/year)*
PCT/US00/30958	09/11/2000	09/11/1999
International Patent classification (IPC) or national Patent classification: H04L27/26		
Applicant AWARE, INC.		

1. This International Examining Authority

   (i) considers that **the international application does not comply with the requirements of unity of invention** (Rule 13.1, 13.2 and 13.3) for the reasons indicated in the Annex.

   (ii) therefore considers that there are **2 inventions** claimed in the international application as indicated in the Annex.

   (iii) recalls that claims relating to inventions in respect of which no international search report has been established need not be the subject of international preliminary examination (Rule 66.1 (e)).

2. Consequently the applicant is hereby **invited**, within the time limit indicated above, **to restrict the claims** as suggested under item 3, below, **or to pay** the amount indicated below:

   eur 1533.00 (Fee per additional invention) x 001 (number of additional inventions) = eur 1533.00 (total amount of additional fees)

   The applicant is informed that, according to Rule 68.3 (c), **the payment of any additional fee may be made under protest**, i.e. a reasonned statement to the effect that the international application complies with the requirement of unity of invention or that the amount of the required additional fee is excessive.

3. **If the applicant opts to restrict the claims**, this Authority suggests the restriction possibilities indicated in the Annex, which in its opinion would be in compliance with the requirement of unity of invention.

4. **In the absence of any response** from the applicant, this Authority will establish the international preliminary examination report on those parts of the international application indicated in the Annex which, in the opinion of this Authority appear to relate to the main invention.

Name and mailing adress of the international preliminary examination authority:	Authorized officer
European Patent Office D-80298 Munich Tel. +49 89 2399 - 0 Tx: 523656 epmu d Fax: +49 89 2399 - 4465	Pajatakis, E Telephone No. +49 89 2399-8898

Form PCT/IPEA/405 (July 1992)

INVITATION TO RESTRICT OR TO PAY ADDITIONAL FEES

International application No. PCT/US00/30958

1. Independent Claims 1, 20 and 37 are directed to scrambling the phase characteristics of carrier signals. This is done by phase shifting a carrier signal by an amount computed from a value which is independent from any input bit value carried by the carrier signal.

   On the other hand independent Claim 39 is directed to avoiding demodulation errors due to clipping of transmitted signals as result of non linear distortions. This is done by comparing received DMT symbols with a bit-value pattern. DMT symbols matching the bit-value pattern are discarded.

2. Thus, the application comprises two groups of independent claims with different features which are based on different concepts.

3. If a further fee is not paid, the examination will be carried out on the invention mentioned first in the claims.

Annex to Form PCT/ISA/206
COMMUNICATION RELATING TO THE RESULTS OF THE PARTIAL INTERNATIONAL SEARCH

International Application No
PCT/US 00/30958

1. The present communication is an Annex to the invitation to pay additional fees (Form PCT/ISA/206). It shows the results of the international search established on the parts of the international application which relate to the invention first mentioned in claims Nos.:
1-13,20-30,37,38
2. This communication is not the international search report which will be established according to Article 18 and Rule 43.
3. If the applicant does not pay any additional search fees, the information appearing in this communication will be considered as the result of the international search and will be included as such in the international search report.
4. If the applicant pays additional fees, the international search report will contain both the information appearing in this communication and the results of the international search on other parts of the international application for which such fees will have been paid.

C. DOCUMENTS CONSIDERED TO BE RELEVANT

Category °	Citation of document, with indication, where appropriate, of the relevant passages	Relevant to claim No.
X	EP 0 719 004 A (MATSUSHITA ELECTRIC IND CO LTD) 26 June 1996 (1996-06-26) column 3, line 28 - line 46 column 14, line 39 - line 55	1-3, 6-12,20, 21, 24-30, 37,38
Y	column 16, line 4 - line 6	13
Y	WO 99 29078 A (BAHLENBERG GUNNAR ;HAAKANSSON SIWERT (SE); LJUNGGREN LIS MARIE (SE) 10 June 1999 (1999-06-10) page 5, line 18 - line 23	13
X	BAUML R W ET AL: "REDUCING THE PEAK-TO-AVERAGE POWER RATIO OF MULTICARRIER MODULATIONBY SELECTED MAPPING" ELECTRONICS LETTERS,GB,IEE STEVENAGE, vol. 32, no. 22, 24 October 1996 (1996-10-24), pages 2056-2057, XP000643915 ISSN: 0013-5194 page 2056, right-hand column, paragraphs 7,8 -page 2057, left-hand column, paragraph 3	1,2,4,5, 20,22, 23,37,38
A	WO 98 32065 A (FORTRESS TECHNOLOGIES INC) 23 July 1998 (1998-07-23) page 16, line 30 -page 17, line 3	8-12, 26-30

-/--

[X] Further documents are listed in the continuation of box C.
[X] Patent family members are listed in annex.

° Special categories of cited documents :
"A" document defining the general state of theart which is not considered to be of particular relevance
"E" earlier document but published on or after theinternational filing date
"L" document which may throw doubts on priority claim(s) or which is cited to establish the publication date of another citation or other special reason (as specified)
"O" document referring to an oral disclosure, use, exhibition or other means
"P" document published prior to the internationalfiling date but later than the priority date claimed
"T" later document published after theinternational filing date or priority date and not in conflict with theapplication but cited to understand the principle or theoryunderlying the invention
"X" document of particular relevance; the claimedinvention cannot be considered novel or cannot be considered to involve an inventive step when the document istaken alone
"Y" document of particular relevance; the claimedinvention cannot be considered to involve an inventive step when the document is combined with one or more othersuch documents, such combination being obvious to a person skilled in the art.
"&" document member of the same patent family

1

Form PCT/ISA/206 (Annex, first sheet) (July 1992)

DISH
Exhibit 1003 Page 361

Annex to Form PCT/ISA/206
COMMUNICATION RELATING TO THE RESULTS
OF THE PARTIAL INTERNATIONAL SEARCH

International Application No
PCT/US 00/30958

C.(Continuation) DOCUMENTS CONSIDERED TO BE RELEVANT

Category *	Citation of document, with indication,where appropriate, of the relevant passages	Relevant to claim No.
A	WO 99 22463 A (MOTOROLA INC) 6 May 1999 (1999-05-06) page 7, line 29 - line 32	8-12, 26-30

Form PCT/ISA/206 (Annex, continuation sheet)(July 1992)

DISH
Exhibit 1003 Page 362

Patent Family Annex

Information on patent family members

International Application No
PCT/US 00/30958

Patent document cited in search report	Publication date	Patent family member(s)	Publication date
EP 0719004 A	26-06-1996	JP 8321820 A	03-12-1996
		US 5682376 A	28-10-1997
WO 9929078 A	10-06-1999	SE 9704497 A	04-06-1999
WO 9832065 A	23-07-1998	AU 5811598 A	07-08-1998
		EP 0951767 A	27-10-1999
WO 9922463 A	06-05-1999	US 6044276 A	28-03-2000
		US 6061574 A	09-05-2000

Form PCT/ISA/206 (patent family annex) (July 1992)

P ENT COOPERATION TREATY

From the INTERNATIONAL SEARCHING AUTHORITY

To:
TESTA, HURWITZ & THIBEAULT, L.L.P.
Attn. Rodriguez, M. A.
High Street Tower
125 High Street
Boston, Massachusetts 02110
UNITED STATES OF AMERICA

PCT

NOTIFICATION OF TRANSMITTAL OF
THE INTERNATIONAL SEARCH REPORT
OR THE DECLARATION

(PCT Rule 44.1)

	Date of mailing *(day/month/year)* 12/06/2001
Applicant's or agent's file reference AWR-017PC	**FOR FURTHER ACTION** See paragraphs 1 and 4 below
International application No. PCT/US 00/30958	International filing date *(day/month/year)* 09/11/2000
Applicant AWARE, INC.	

1. [X] The applicant is hereby notified that the International Search Report has been established and is transmitted herewith.

Filing of amendments and statement under Article 19:
The applicant is entitled, if he so wishes, to amend the claims of the International Application (see Rule 46):

When? The time limit for filing such amendments is normally 2 months from the date of transmittal of the International Search Report; however, for more details, see the notes on the accompanying sheet.

Where? Directly to the International Bureau of WIPO
34, chemin des Colombettes
1211 Geneva 20, Switzerland
Fascimile No.: (41-22) 740.14.35

For more detailed instructions, see the notes on the accompanying sheet.

2. [ ] The applicant is hereby notified that no International Search Report will be established and that the declaration under Article 17(2)(a) to that effect is transmitted herewith.

3. [ ] **With regard to the protest** against payment of (an) additional fee(s) under Rule 40.2, the applicant is notified that:

[ ] the protest together with the decision thereon has been transmitted to the International Bureau together with the applicant's request to forward the texts of both the protest and the decision thereon to the designated Offices.

[ ] no decision has been made yet on the protest; the applicant will be notified as soon as a decision is made.

4. **Further action(s):** The applicant is reminded of the following:

Shortly after **18 months** from the priority date, the international application will be published by the International Bureau. If the applicant wishes to avoid or postpone publication, a notice of withdrawal of the international application, or of the priority claim, must reach the International Bureau as provided in Rules 90*bis*.1 and 90*bis*.3, respectively, before the completion of the technical preparations for international publication.

Within **19 months** from the priority date, a demand for international preliminary examination must be filed if the applicant wishes to postpone the entry into the national phase until 30 months from the priority date (in some Offices even later).

Within **20 months** from the priority date, the applicant must perform the prescribed acts for entry into the national phase before all designated Offices which have not been elected in the demand or in a later election within 19 months from the priority date or could not be elected because they are not bound by Chapter II.

Name and mailing address of the International Searching Authority European Patent Office, P.B. 5818 Patentlaan 2 NL-2280 HV Rijswijk Tel. (+31-70) 340-2040, Tx. 31 651 epo nl, Fax: (+31-70) 340-3016	Authorized officer Guido Benker

Form PCT/ISA/220 (July 1998)

NOTES TO FORM PCT/ISA/220

These Notes are intended to give the basic instructions concerning the filing of amendments under article 19. The Notes are based on the requirements of the Patent Cooperation Treaty, the Regulations and the Administrative Instructions under that Treaty. In case of discrepancy between these Notes and those requirements, the latter are applicable. For more detailed information, see also the PCT Applicant's Guide, a publication of WIPO.

In these Notes, "Article", "Rule", and "Section" refer to the provisions of the PCT, the PCT Regulations and the PCT Administrative Instructions, respectively.

INSTRUCTIONS CONCERNING AMENDMENTS UNDER ARTICLE 19

The applicant has, after having received the international search report, one opportunity to amend the claims of the international application. It should however be emphasized that, since all parts of the international application (claims, description and drawings) may be amended during the international preliminary examination procedure, there is usually no need to file amendments of the claims under Article 19 except where, e.g. the applicant wants the latter to be published for the purposes of provisional protection or has another reason for amending the claims before international publication. Furthermore, it should be emphasized that provisional protection is available in some States only.

What parts of the international application may be amended?

Under Article 19, only the claims may be amended.

During the international phase, the claims may also be amended (or further amended) under Article 34 before the International Preliminary Examining Authority. The description and drawings may only be amended under Article 34 before the International Examining Authority.

Upon entry into the national phase, all parts of the international application may be amended under Article 28 or, where applicable, Article 41.

When?

Within 2 months from the date of transmittal of the international search report or 16 months from the priority date, whichever time limit expires later. It should be noted, however, that the amendments will be considered as having been received on time if they are received by the International Bureau after the expiration of the applicable time limit but before the completion of the technical preparations for international publication (Rule 46.1).

Where not to file the amendments?

The amendments may only be filed with the International Bureau and not with the receiving Office or the International Searching Authority (Rule 46.2).

Where a demand for international preliminary examination has been/is filed, see below.

How?

Either by cancelling one or more entire claims, by adding one or more new claims or by amending the text of one or more of the claims as filed.

A replacement sheet must be submitted for each sheet of the claims which, on account of an amendment or amendments, differs from the sheet originally filed.

All the claims appearing on a replacement sheet must be numbered in Arabic numerals. Where a claim is cancelled, no renumbering of the other claims is required. In all cases where claims are renumbered, they must be renumbered consecutively (Administrative Instructions, Section 205(b)).

The amendments must be made in the language in which the international application is to be published.

What documents must/may accompany the amendments?

Letter (Section 205(b)):

The amendments must be submitted with a letter.

The letter will not be published with the international application and the amended claims. It should not be confused with the "Statement under Article 19(1)" (see below, under "Statement under Article 19(1)").

The letter must be in English or French, at the choice of the applicant. However, if the language of the international application is English, the letter must be in English; if the language of the international application is French, the letter must be in French.

DISH
Exhibit 1003 Page 365

NOTES TO FORM PCT/ISA/220 (continued)

The letter must indicate the differences between the claims as filed and the claims as amended. It must, in particular, indicate, in connection with each claim appearing in the international application (it being understood that identical indications concerning several claims may be grouped),whether

(i) the claim is unchanged;

(ii) the claim is cancelled;

(iii) the claim is new;

(iv) the claim replaces one or more claims as filed;

(v) the claim is the result of the division of a claim as filed.

The following examples illustrate the manner in which amendments must be explained in the accompanying letter:

1. [Where originally there were 48 claims and after amendment of some claims there are 51]:
"Claims 1 to 29, 31, 32, 34, 35, 37 to 48 replaced by amended claims bearing the same numbers; claims 30, 33 and 36 unchanged; new claims 49 to 51 added."

2. [Where originally there were 15 claims and after amendment of all claims there are 11]:
"Claims 1 to 15 replaced by amended claims 1 to 11."

3. [Where originally there were 14 claims and the amendments consist in cancelling some claims and in adding new claims]:
"Claims 1 to 6 and 14 unchanged; claims 7 to 13 cancelled; new claims 15, 16 and 17 added." or
"Claims 7 to 13 cancelled; new claims 15, 16 and 17 added; all other claims unchanged."

4. [Where various kinds of amendments are made]:
"Claims 1-10 unchanged; claims 11 to 13, 18 and 19 cancelled; claims 14, 15 and 16 replaced by amended claim 14; claim 17 subdivided into amended claims 15, 16 and 17; new claims 20 and 21 added."

"Statement under article 19(1)" (Rule 46.4)

The amendments may be accompanied by a statement explaining the amendments and indicating any impact that such amendments might have on the description and the drawings (which cannot be amended under Article 19(1)).

The statement will be published with the international application and the amended claims.

It must be in the language in which the international application is to be published.

It must be brief, not exceeding 500 words if in English or if translated into English.

It should not be confused with and does not replace the letter indicating the differences between the claims as filed and as amended. It must be filed on a separate sheet and must be identified as such by a heading, preferably by using the words "Statement under Article 19(1)."

It may not contain any disparaging comments on the international search report or the relevance of citations contained in that report. Reference to citations, relevant to a given claim, contained in the international search report may be made only in connection with an amendment of that claim.

Consequence if a demand for international preliminary examination has already been filed

If, at the time of filing any amendments and any accompanying statement, under Article 19, a demand for international preliminary examination has already been submitted, the applicant must preferably, at the time of filing the amendments (and any statement) with the International Bureau, also file with the International Preliminary Examining Authority a copy of such amendments (and of any statement) and, where required, a translation of such amendments for the procedure before that Authority (see Rules 55.3(a) and 62.2, first sentence). For further information, see the Notes to the demand form (PCT/IPEA/401).

Consequence with regard to translation of the international application for entry into the national phase

The applicant's attention is drawn to the fact that, upon entry into the national phase, a translation of the claims as amended under Article 19 may have to be furnished to the designated/elected Offices, instead of, or in addition to, the translation of the claims as filed.

For further details on the requirements of each designated/elected Office, see Volume II of the PCT Applicant's Guide.

DISH
Exhibit 1003 Page 366

F ENT COOPERATION TREATY

PCT

INTERNATIONAL SEARCH REPORT

(PCT Article 18 and Rules 43 and 44)

Applicant's or agent's file reference	FOR FURTHER ACTION	see Notification of Transmittal of International Search Report (Form PCT/ISA/220) as well as, where applicable, item 5 below.
AWR-017PC		
International application No.	International filing date *(day/month/year)*	(Earliest) Priority Date *(day/month/year)*
PCT/US 00/ 30958	09/11/2000	09/11/1999
Applicant		
AWARE, INC.		

This International Search Report has been prepared by this International Searching Authority and is transmitted to the applicant according to Article 18. A copy is being transmitted to the International Bureau.

This International Search Report consists of a total of 6 sheets.

[X] It is also accompanied by a copy of each prior art document cited in this report.

1. **Basis of the report**

a. With regard to the **language,** the international search was carried out on the basis of the international application in the language in which it was filed, unless otherwise indicated under this item.

[ ] the international search was carried out on the basis of a translation of the international application furnished to this Authority (Rule 23.1(b)).

b. With regard to any **nucleotide and/or amino acid sequence** disclosed in the international application, the international search was carried out on the basis of the sequence listing :

[ ] contained in the international application in written form.

[ ] filed together with the international application in computer readable form.

[ ] furnished subsequently to this Authority in written form.

[ ] furnished subsequently to this Authority in computer readble form.

[ ] the statement that the subsequently furnished written sequence listing does not go beyond the disclosure in the international application as filed has been furnished.

[ ] the statement that the information recorded in computer readable form is identical to the written sequence listing has been furnished

2. [ ] **Certain claims were found unsearchable** (See Box I).

3. [X] **Unity of invention is lacking** (see Box II).

4. With regard to the **title,**

[ ] the text is approved as submitted by the applicant.

[X] the text has been established by this Authority to read as follows:

PAR REDUCTION BY CARRIERS PHASE RANDOMIZATION IN MULTICARRIER COMMUNICATIONS

5. With regard to the **abstract,**

[ ] the text is approved as submitted by the applicant.

[X] the text has been established, according to Rule 38.2(b), by this Authority as it appears in Box III. The applicant may, within one month from the date of mailing of this international search report, submit comments to this Authority.

6. The figure of the **drawings** to be published with the abstract is Figure No. 1

[ ] as suggested by the applicant.

[X] because the applicant failed to suggest a figure.

[ ] because this figure better characterizes the invention.

[ ] None of the figures.

Form PCT/ISA/210 (first sheet) (July 1998)

INTER ATIONAL SEARCH REPORT

national Application No
PCT/US 00/30958

A. CLASSIFICATION OF SUBJECT MATTER
IPC 7 H04L27/26

According to International Patent Classification (IPC) or to both national classification and IPC

B. FIELDS SEARCHED

Minimum documentation searched (classification system followed by classification symbols)
IPC 7 H04L

Documentation searched other than minimum documentation to the extent that such documents are included in the fields searched

Electronic data base consulted during the international search (name of data base and, where practical, search terms used)
EPO-Internal, INSPEC, COMPENDEX, WPI Data, PAJ

C. DOCUMENTS CONSIDERED TO BE RELEVANT

Category °	Citation of document, with indication, where appropriate, of the relevant passages	Relevant to claim No.
X	EP 0 719 004 A (MATSUSHITA ELECTRIC IND CO LTD) 26 June 1996 (1996-06-26)	1-3, 6-12,20, 21, 24-30, 37,38
	column 3, line 28 - line 46 column 14, line 39 - line 55	
Y	column 16, line 4 - line 6	13-15, 18,19, 31,32, 35,36

Y	WO 99 29078 A (BAHLENBERG GUNNAR ;HAAKANSSON SIWERT (SE); LJUNGGREN LIS MARIE (SE) 10 June 1999 (1999-06-10) page 5, line 18 - line 23	13

	-/--	

[X] Further documents are listed in the continuation of box C.

[X] Patent family members are listed in annex.

° Special categories of cited documents :

"A" document defining the general state of the art which is not considered to be of particular relevance

"E" earlier document but published on or after the international filing date

"L" document which may throw doubts on priority claim(s) or which is cited to establish the publication date of another citation or other special reason (as specified)

"O" document referring to an oral disclosure, use, exhibition or other means

"P" document published prior to the international filing date but later than the priority date claimed

"T" later document published after the international filing date or priority date and not in conflict with the application but cited to understand the principle or theory underlying the invention

"X" document of particular relevance; the claimed invention cannot be considered novel or cannot be considered to involve an inventive step when the document is taken alone

"Y" document of particular relevance; the claimed invention cannot be considered to involve an inventive step when the document is combined with one or more other such documents, such combination being obvious to a person skilled in the art.

"&" document member of the same patent family

Date of the actual completion of the international search	Date of mailing of the international search report
25 May 2001	

Name and mailing address of the ISA	Authorized officer
European Patent Office, P.B. 5818 Patentlaan 2 NL - 2280 HV Rijswijk Tel. (+31-70) 340-2040, Tx. 31 651 epo nl, Fax: (+31-70) 340-3016	Farese, L

2

Form PCT/ISA/210 (second sheet) (July 1992)

DISH
Exhibit 1003 Page 368

C.(Continuation) DOCUMENTS CONSIDERED TO BE RELEVANT

Category °	Citation of document, with indication,where appropriate, of the relevant passages	Relevant to claim No.
Y	EP 0 584 534 A (ALCATEL ITALIA) 2 March 1994 (1994-03-02) page 2, line 44 - line 50 page 3, line 2 - line 4 page 3, line 31 - line 35	14,15, 18,19, 31,32, 35,36
X	GB 2 330 491 A (BRITISH BROADCASTING CORP) 21 April 1999 (1999-04-21) page 5, last paragraph -page 6, line 3 figure 2	39
X	BAUML R W ET AL: "REDUCING THE PEAK-TO-AVERAGE POWER RATIO OF MULTICARRIER MODULATIONBY SELECTED MAPPING" ELECTRONICS LETTERS,GB,IEE STEVENAGE, vol. 32, no. 22, 24 October 1996 (1996-10-24), pages 2056-2057, XP000643915 ISSN: 0013-5194 page 2056, right-hand column, paragraphs 7,8 -page 2057, left-hand column, paragraph 3	1,2,4,5, 20,22, 23,37,38
A	WO 98 32065 A (FORTRESS TECHNOLOGIES INC) 23 July 1998 (1998-07-23) page 16, line 30 -page 17, line 3	8-12, 26-30
A	WO 99 22463 A (MOTOROLA INC) 6 May 1999 (1999-05-06) page 7, line 29 - line 32	8-12, 26-30

2

INTERNATIONAL SEARCH REPORT

International application No.
PCT/US 00/30958

Box I Observations where certain claims were found unsearchable (Continuation of item 1 of first sheet)

This International Search Report has not been established in respect of certain claims under Article 17(2)(a) for the following reasons:

1. ☐ Claims Nos.:
because they relate to subject matter not required to be searched by this Authority, namely:

2. ☐ Claims Nos.:
because they relate to parts of the International Application that do not comply with the prescribed requirements to such an extent that no meaningful International Search can be carried out, specifically:

3. ☐ Claims Nos.:
because they are dependent claims and are not drafted in accordance with the second and third sentences of Rule 6.4(a).

Box II Observations where unity of invention is lacking (Continuation of item 2 of first sheet)

This International Searching Authority found multiple inventions in this international application, as follows:

see additional sheet

1. ☒ As all required additional search fees were timely paid by the applicant, this International Search Report covers all searchable claims.

2. ☐ As all searchable claims could be searched without effort justifying an additional fee, this Authority did not invite payment of any additional fee.

3. ☐ As only some of the required additional search fees were timely paid by the applicant, this International Search Report covers only those claims for which fees were paid, specifically claims Nos.:

4. ☐ No required additional search fees were timely paid by the applicant. Consequently, this International Search Report is restricted to the invention first mentioned in the claims; it is covered by claims Nos.:

Remark on Protest

☐ The additional search fees were accompanied by the applicant's protest.

☒ No protest accompanied the payment of additional search fees.

DISH
Exhibit 1003 Page 370

FURTHER INFORMATION CONTINUED FROM PCT/ISA/ 210

This International Searching Authority found multiple (groups of) inventions in this international application, as follows:

1. Claims: 1-13,20-30, 37-38

   carrier phase scrambling

2. Claims: 14-19,31-36

   information throughput improvement

3. Claim : 39

   error correction

INTE `ATIONAL SEARCH REPORT

Information on patent family members

rnational Application No
PCT/US 00/30958

Patent document cited in search report	Publication date	Patent family member(s)	Publication date
EP 0719004 A	26-06-1996	JP 8321820 A	03-12-1996
		US 5682376 A	28-10-1997
WO 9929078 A	10-06-1999	SE 9704497 A	04-06-1999
EP 0584534 A	02-03-1994	IT 1259012 B	11-03-1996
		DE 69326298 D	14-10-1999
		DE 69326298 T	23-03-2000
		JP 6164664 A	10-06-1994
		NO 932469 A	28-01-1994
		US 5493587 A	20-02-1996
GB 2330491 A	21-04-1999	NONE	
WO 9832065 A	23-07-1998	AU 5811598 A	07-08-1998
		EP 0951767 A	27-10-1999
WO 9922463 A	06-05-1999	US 6044276 A	28-03-2000
		US 6061574 A	09-05-2000

Form PCT/ISA/210 (patent family annex) (July 1992)

Box III TEXT OF THE ABSTRACT (Continuation of item 5 of the first sheet)

A system and method that scrambles the phase characteristic of a multicarrier signal are described. The scrambling of the phase characteristic of each carrier signal includes associating a value with each carrier signal and computing a phase shift for each carrier signal based on the value associated with that carrier signal. The value is determined independently of any input bit value carried by that carrier signal. The phase shift computed for each carrier signal is combined with the phase characteristic of that carrier signal so as to scramble the phase characteristic of the carrier signals. Bits of an input signal are modulated onto the carrier signals having a scrambled phase characteristic to produce a transmission signal with a reduced PAR.

PATENT COOPERATION TREATY

PCT

INTERNATIONAL PRELIMINARY EXAMINATION REPORT

(PCT Article 36 and Rule 70)

REC'D 06 MAR 2002
WIPO PCT

Applicant's or agent's file reference	FOR FURTHER ACTION	See Notification of Transmittal of International Preliminary Examination Report (Form PCT/IPEA/416)
081513-49		
International application No.	International filing date *(day/month/year)*	Priority date *(day/month/year)*
PCT/US00/30958	09/11/2000	09/11/1999
International Patent Classification (IPC) or national classification and IPC H04L27/26		
Applicant AWARE, INC.		

1. This international preliminary examination report has been prepared by this International Preliminary Examining Authority and is transmitted to the applicant according to Article 36.

2. This REPORT consists of a total of 6 sheets, including this cover sheet.

   ☐ This report is also accompanied by ANNEXES, i.e. sheets of the description, claims and/or drawings which have been amended and are the basis for this report and/or sheets containing rectifications made before this Authority (see Rule 70.16 and Section 607 of the Administrative Instructions under the PCT).

   These annexes consist of a total of sheets.

3. This report contains indications relating to the following items:

   - I ☒ Basis of the report
   - II ☐ Priority
   - III ☒ Non-establishment of opinion with regard to novelty, inventive step and industrial applicability
   - IV ☐ Lack of unity of invention
   - V ☒ Reasoned statement under Article 35(2) with regard to novelty, inventive step or industrial applicability; citations and explanations suporting such statement
   - VI ☐ Certain documents cited
   - VII ☐ Certain defects in the international application
   - VIII ☐ Certain observations on the international application

Date of submission of the demand	Date of completion of this report
06/06/2001	04.03.2002
Name and mailing address of the international preliminary examining authority: European Patent Office D-80298 Munich Tel. +49 89 2399 - 0 Tx: 523656 epmu d Fax: +49 89 2399 - 4465	Authorized officer Pajatakis, E Telephone No. +49 89 2399 8898

Form PCT/IPEA/409 (cover sheet) (January 1994)

INTERNATIONAL PRELIMINARY EXAMINATION REPORT

International application No. PCT/US00/30958

I. Basis of the report

1. With regard to the **elements** of the international application *(Replacement sheets which have been furnished to the receiving Office in response to an invitation under Article 14 are referred to in this report as "originally filed" and are not annexed to this report since they do not contain amendments (Rules 70.16 and 70.17))*:
Description, pages:

1-17 as originally filed

Claims, No.:

1-39 as originally filed

Drawings, sheets:

1/2-2/2 as originally filed

2. With regard to the **language**, all the elements marked above were available or furnished to this Authority in the language in which the international application was filed, unless otherwise indicated under this item.

These elements were available or furnished to this Authority in the following language: , which is:

- ☐ the language of a translation furnished for the purposes of the international search (under Rule 23.1(b)).
- ☐ the language of publication of the international application (under Rule 48.3(b)).
- ☐ the language of a translation furnished for the purposes of international preliminary examination (under Rule 55.2 and/or 55.3).

3. With regard to any **nucleotide and/or amino acid sequence** disclosed in the international application, the international preliminary examination was carried out on the basis of the sequence listing:

- ☐ contained in the international application in written form.
- ☐ filed together with the international application in computer readable form.
- ☐ furnished subsequently to this Authority in written form.
- ☐ furnished subsequently to this Authority in computer readable form.
- ☐ The statement that the subsequently furnished written sequence listing does not go beyond the disclosure in the international application as filed has been furnished.
- ☐ The statement that the information recorded in computer readable form is identical to the written sequence listing has been furnished.

4. The amendments have resulted in the cancellation of:

- ☐ the description, pages:
- ☐ the claims, Nos.:

DISH
Exhibit 1003 Page 375

☐ the drawings, sheets:

5. ☐ This report has been established as if (some of) the amendments had not been made, since they have been considered to go beyond the disclosure as filed (Rule 70.2(c)):

(Any replacement sheet containing such amendments must be referred to under item 1 and annexed to this report.)

6. Additional observations, if necessary:

III. Non-establishment of opinion with regard to novelty, inventive step and industrial applicability

1. The questions whether the claimed invention appears to be novel, to involve an inventive step (to be non-obvious), or to be industrially applicable have not been examined in respect of:

☐ the entire international application.

☒ claims Nos. 20-36.

because:

☐ the said international application, or the said claims Nos. relate to the following subject matter which does not require an international preliminary examination (*specify*):

☐ the description, claims or drawings (*indicate particular elements below*) or said claims Nos. are so unclear that no meaningful opinion could be formed (*specify*):

☒ the claims, or said claims Nos. 20-36 are so inadequately supported by the description that no meaningful opinion could be formed.

☐ no international search report has been established for the said claims Nos. .

2. A meaningful international preliminary examination cannot be carried out due to the failure of the nucleotide and/or amino acid sequence listing to comply with the standard provided for in Annex C of the Administrative Instructions:

☐ the written form has not been furnished or does not comply with the standard.

☐ the computer readable form has not been furnished or does not comply with the standard.

V. Reasoned statement under Article 35(2) with regard to novelty, inventive step or industrial applicability; citations and explanations supporting such statement

1. Statement

Novelty (N) Yes: Claims 4,5,7-18,39

	No:	Claims	1-3,6,19,37,38
Inventive step (IS)	Yes:	Claims	39
	No:	Claims	1-19,37,38
Industrial applicability (IA)	Yes:	Claims	1-19,37-39
	No:	Claims	

2. Citations and explanations
see separate sheet

Re Item III

Non-establishment of opinion with regard to novelty, inventive step and industrial applicability

1. According to the description (page 3, lines 10-16, page 4, lines 4-10) the phase characteristics of the modulated carrier signals are scrambled by **combining the phase shift computed for each carrier signal with the phase characteristic of that carrier signal**. As this essential feature is missing from Claims 20-36, their scope comprises embodiments in which phase scrambling is carried out without the above feature which are not supported by the description, see also Guidelines III, 4.3.

2. The application comprises multiple independent claims of the same category and does not therefore meet the requirement of conciseness, Article 6.

Re Item V

Reasoned statement under Article 35(2) with regard to novelty, inventive step or industrial applicability; citations and explanations supporting such statement

1. The subject-matter of Claim 1 is not new, Article 33(2)

   D1 = *BAUML R W ET AL: 'REDUCING THE PEAK-TO-AVERAGE POWER RATIO OF MULTICARRIER MODULATIONBY SELECTED MAPPING' ELECTRONICS LETTERS,GB,IEE STEVENAGE, vol. 32, no. 22, 24 October 1996 (1996-10-24), pages 2056-2057,* **XP000643915** *ISSN: 0013-5194* discloses a method for scrambling the phase characteristics of the carrier signals in a multicarrier modulation system. The method comprises associating each carrier signal **V(μ)** with a value ϕ_μ determined independently of any input bit value (page 2056, right col., last but one paragraph). A phase shift $e^{i\phi\mu}$ is computed for each carrier signal and combined with the phase characteristic of that carrier signal so as to substantially scramble the phase characteristics of the plurality of the carrier signals (page 2056, right col., equation 4).

2. All features of Claim 1 are also known from **D2 = EP-A-0 719 004** (col. 14, line 39 - col. 15, fig. 9).

DISH
Exhibit 1003 Page 378

3. The above finding also applies to Claim 37 which corresponds to Claim 1.

4. The additional features of the dependent claims do not add anything new or inventive to the above-mentioned independent claims because these features are either known from the above prior art (reduced peak-to-average power ratio, varying value with each carrier, pseudo-random pattern) or common measures (using symbol and frame counts).

5. The subject-matter of Claim 39 is new and involves an inventive step, Article 33(2)(3).

5.1 Claim 39 relates to a method for communicating in a multicarrier system comprising receiving a transmission signal comprising DMT symbols each having a bit-value pattern.

Such a method is known from **D3 = EP-A-0 584 534**.

5.2 The underlying problem is avoiding demodulation errors due to clipping of transmitted signals as result of non linear distortions.

This problem is solved by comparing received DMT symbols with a bit-value pattern. DMT symbols matching the bit-value pattern are discarded.

5.3 Neither the problem not the solution is suggested by the prior art relevant for this invention.

In **D3** high power bit-value patterns, which could cause nonlinear distortions, are not clipped but replaced with different patterns using an enhanced alphabet. At the receiver those patterns are restored to the original patterns. Thus, **D3** leads on a different way which is recovering high power patterns rather than discarding them.

GB-A-2 330 49 does not relate to treating bit patterns which can cause non linear distortions. A dummy symbol is inserted at the start of each frame in order to provide a phase reference for differential encoding.

PATENT COOPERATION TREATY

From the:
INTERNATIONAL PRELIMINARY EXAMINING AUTHORITY

To:

VICK, Jason H.
Nixon Peabody LLP
8180 Greensboro Drive,Suite 800
McLean,Virginia 22102
ETATS-UNIS D'AMERIQUE

PCT

WRITTEN OPINION

(PCT Rule 66)

Date of mailing *(day/month/year)*	18.12.2001
Applicant's or agent's file reference: 081513-49	**REPLY DUE** **within 1 month(s) and 15 days** from the above date of mailing

International application No.	International filing date *(day/month/year)*	Priority date *(day/month/year)*
PCT/US00/30958	09/11/2000	09/11/1999

International Patent Classification (IPC) or both national classification and IPC

H04L27/26

Applicant

AWARE, INC.

1. This written opinion is the **first** drawn up by this International Preliminary Examining Authority.

2. This opinion contains indications relating to the following items:

I	☒	Basis of the opinion
II	☐	Priority
III	☒	Non-establishment of opinion with regard to novelty, inventive step and industrial applicability
IV	☐	Lack of unity of invention
V	☒	Reasoned statement under Rule 66.2(a)(ii) with regard to novelty, inventive step or industrial applicability; citations and explanations supporting such statement
VI	☐	Certain document cited
VII	☐	Certain defects in the international application
VIII	☐	Certain observations on the international application

3. The applicant is hereby **invited to reply** to this opinion.

When? See the time limit indicated above. The applicant may, before the expiration of that time limit, request this Authority to grant an extension, see Rule 66.2(d).

How? By submitting a written reply, accompanied, where appropriate, by amendments, according to Rule 66.3. For the form and the language of the amendments, see Rules 66.8 and 66.9.

Also: For an additional opportunity to submit amendments, see Rule 66.4. For the examiner's obligation to consider amendments and/or arguments, see Rule 66.4 bis. For an informal communication with the examiner, see Rule 66.6.

If no reply is filed, the international preliminary examination report will be established on the basis of this opinion.

4. The final date by which the international preliminary examination report must be established according to Rule 69.2 is: 09/03/2002.

Name and mailing address of the international preliminary examining authority:

European Patent Office
D-80298 Munich
Tel. +49 89 2399 - 0 Tx: 523656 epmu d
Fax: +49 89 2399 - 4465

Authorized officer / Examiner

Pajatakis, E

Formalities officer (incl. extension of time limits)

Barrio Baranano, A
Telephone No. +49 89 2399 8621

Form PCT/IPEA/408 (cover sheet) (January 1994)

Re Item III

Non-establishment of opinion with regard to novelty, inventive step and industrial applicability

1. According to the description (page 3, lines 10-16, page 4, lines 4-10) the phase characteristics of the modulated carrier signals are scrambled by **combining the phase shift computed for each carrier signal with the phase characteristic of that carrier signal**. As this essential feature is missing from Claims 20-36, their scope comprises embodiments in which phase scrambling is carried out without the above feature which are not supported by the description, see also Guidelines III, 4.3.

2. To meet the requirement of conciseness, Article 6, a single independent claim in each category should be filed for the first invention.

Re Item V

Reasoned statement under Rule 66.2(a)(ii) with regard to novelty, inventive step or industrial applicability; citations and explanations supporting such statement

1. The subject-matter of Claim 1 is not new, Article 33(2)

   D1 = *BAUML R W ET AL: 'REDUCING THE PEAK-TO-AVERAGE POWER RATIO OF MULTICARRIER MODULATIONBY SELECTED MAPPING' ELECTRONICS LETTERS,GB,IEE STEVENAGE, vol. 32, no. 22, 24 October 1996 (1996-10-24), pages 2056-2057*, **XP000643915** *ISSN: 0013-5194* discloses a method for scrambling the phase characteristics of the carrier signals in a multicarrier modulation system. The method comprises associating each carrier signal **V(μ)** with a value ϕ_μ determined independently of any input bit value (page 2056, right col., last but one paragraph). A phase shift $\mathbf{e}^{i\phi\mu}$ is computed for each carrier signal and combined with the phase characteristic of that carrier signal so as to substantially scramble the phase characteristics of the plurality of the carrier signals (page 2056, right col., equation 4).

2. All features of Claim 1 are also known from **D2 = EP-A-0 719 004** (col. 14, line 39 - col. 15, fig. 9).

3. The above finding also applies to Claim 37 which corresponds to Claim 1.

4. The additional features of the dependent claims do not add anything new or inventive to the above-mentioned independent claims because these features are either known from the above prior art (reduced peak-to-average power ratio, varying value with each carrier, pseudo-random pattern) or common measures (using symbol and frame counts).

I. Basis of the opinion

1. With regard to the **elements** of the international application (Replacement *sheets which have been furnished to the receiving Office in response to an invitation under Article 14 are referred to in this opinion as "originally filed")*:

   Description, pages:

   1-17 as originally filed

   Claims, No.:

   1-39 as originally filed

   Drawings, sheets:

   1/2-2/2 as originally filed

2. With regard to the **language**, all the elements marked above were available or furnished to this Authority in the language in which the international application was filed, unless otherwise indicated under this item.

   These elements were available or furnished to this Authority in the following language: , which is:

   ☐ the language of a translation furnished for the purposes of the international search (under Rule 23.1(b)).
   ☐ the language of publication of the international application (under Rule 48.3(b)).
   ☐ the language of a translation furnished for the purposes of international preliminary examination (under Rule 55.2 and/or 55.3).

3. With regard to any **nucleotide and/or amino acid sequence** disclosed in the international application, the international preliminary examination was carried out on the basis of the sequence listing:

   ☐ contained in the international application in written form.
   ☐ filed together with the international application in computer readable form.
   ☐ furnished subsequently to this Authority in written form.
   ☐ furnished subsequently to this Authority in computer readable form.
   ☐ The statement that the subsequently furnished written sequence listing does not go beyond the disclosure in the international application as filed has been furnished.
   ☐ The statement that the information recorded in computer readable form is identical to the written sequence listing has been furnished.

4. The amendments have resulted in the cancellation of:

   ☐ the description, pages:
   ☐ the claims, Nos.:

☐ the drawings, sheets:

5. ☐ This report has been established as if (some of) the amendments had not been made, since they have been considered to go beyond the disclosure as filed (Rule 70.2(c)):

   (Any replacement sheet containing such amendments must be referred to under item 1 and annexed to this report.)

6. Additional observations, if necessary:

III. Non-establishment of opinion with regard to novelty, inventive step and industrial applicability

1. The questions whether the claimed invention appears to be novel, to involve an inventive step (to be non-obvious), or to be industrially applicable have not been and will not be examined in respect of:

   ☐ the entire international application,

   ☒ claims Nos. 20-36,

because:

   ☐ the said international application, or the said claims Nos. relate to the following subject matter which does not require an international preliminary examination (*specify*):

   ☐ the description, claims or drawings (*indicate particular elements below*) or said claims Nos. are so unclear that no meaningful opinion could be formed (*specify*):

   ☒ the claims, or said claims Nos. 20-36 are so inadequately supported by the description that no meaningful opinion could be formed.

   ☐ no international search report has been established for the said claims Nos. .

2. A written opinion cannot be drawn due to the failure of the nucleotide and/or amino acid sequence listing to comply with the standard provided for in Annex C of the Administrative Instructions:

   ☐ the written form has not been furnished or does not comply with the standard.

   ☐ the computer readable form has not been furnished or does not comply with the standard.

V. Reasoned statement under Rule 66.2(a)(ii) with regard to novelty, inventive step or industrial applicability; citations and explanations supporting such statement

1. Statement

Novelty (N)	Claims	1-3,6,19,37,38
Inventive step (IS)	Claims	1-19,37,38

Industrial applicability (IA) Claims

2. Citations and explanations
see separate sheet

Electronic Patent Application Fee Transmittal	
Application Number:	
Filing Date:	
Title of Invention:	A SYSTEM AND METHOD FOR DESCRAMBLING THE PHASE OF CARRIERS IN A MULTICARRIER COMMUNICATIONS SYSTEM
First Named Inventor/Applicant Name:	Marcos C. Tzannes
Filer:	Jason Vick/Joanne Vos
Attorney Docket Number:	5550-47-CON-DIV-CON-2
Filed as Large Entity	

Utility under 35 USC 111(a) Filing Fees

Description	Fee Code	Quantity	Amount	Sub-Total in USD($)
Basic Filing:				
Utility application filing	1011	1	380	380
Utility Search Fee	1111	1	620	620
Utility Examination Fee	1311	1	250	250
Pages:				
Claims:				
Claims in excess of 20	1202	11	60	660
Miscellaneous-Filing:				
Petition:				

Description	Fee Code	Quantity	Amount	Sub-Total in USD($)
Patent-Appeals-and-Interference:				
Post-Allowance-and-Post-Issuance:				
Extension-of-Time:				
Miscellaneous:				
		Total in USD ($)		**1910**

Electronic Acknowledgement Receipt	
EFS ID:	12471182
Application Number:	13439605
International Application Number:	
Confirmation Number:	4069
Title of Invention:	A SYSTEM AND METHOD FOR DESCRAMBLING THE PHASE OF CARRIERS IN A MULTICARRIER COMMUNICATIONS SYSTEM
First Named Inventor/Applicant Name:	Marcos C. Tzannes
Customer Number:	62574
Filer:	Jason Vick/Joanne Vos
Filer Authorized By:	Jason Vick
Attorney Docket Number:	5550-47-CON-DIV-CON-2
Receipt Date:	04-APR-2012
Filing Date:	
Time Stamp:	17:42:01
Application Type:	Utility under 35 USC 111(a)

Payment information:

Submitted with Payment	yes
Payment Type	Deposit Account
Payment was successfully received in RAM	$1910
RAM confirmation Number	4937
Deposit Account	191970
Authorized User	
The Director of the USPTO is hereby authorized to charge indicated fees and credit any overpayment as follows: Charge any Additional Fees required under 37 C.F.R. Section 1.16 (National application filing, search, and examination fees) Charge any Additional Fees required under 37 C.F.R. Section 1.17 (Patent application and reexamination processing fees)	

Charge any Additional Fees required under 37 C.F.R. Section 1.19 (Document supply fees)

Charge any Additional Fees required under 37 C.F.R. Section 1.21 (Miscellaneous fees and charges)

File Listing:

Document Number	Document Description	File Name	File Size(Bytes)/ Message Digest	Multi Part /.zip	Pages (if appl.)
1	Application Data Sheet	ADS.pdf	1425016 ee07199d6e61b9037beb736e9a5ac88f510cbec8	no	5
Warnings:					
Information:					
2	Oath or Declaration filed	Executed_Declaration.pdf	129731 03aa7a3a9e95449765ced33b67bb6800be76c351	no	3
Warnings:					
Information:					
3		AMEND_PRELIM_01.pdf	567092 3f8f1c32b82f5bf8bf30e7e075986d56a382f41c	yes	9

Multipart Description/PDF files in .zip description

Document Description	Start	End
Preliminary Amendment	1	1
Specification	2	2
Drawings-only black and white line drawings	3	3
Claims	4	8
Applicant Arguments/Remarks Made in an Amendment	9	9

Warnings:					
Information:					
4		Parent_Specification.pdf	811453 aed02663f286a112a60edb1abf3e381f8cf74638	yes	22

Multipart Description/PDF files in .zip description

Document Description	Start	End
Specification	1	18
Claims	19	21
Abstract	22	22

Warnings:					
Information:					
5	Drawings-only black and white line drawings	Parent_Figures.pdf	34370 6f59ed78486e4ebaed600b38a558ebac2c115456	no	2
Warnings:					
Information:					
6		Marked_Up_Substitute_Spec.pdf	137571 cc293ff5bf5f21efd1b80daa5309bdbba5b0ec86	yes	17
	Multipart Description/PDF files in .zip description				
	Document Description		**Start**	**End**	
	Specification		1	16	
	Abstract		17	17	
Warnings:					
Information:					
7		Clean_Substitute_Spec.pdf	135747 d1c784ad66cc16df003b78417c95962d93eb7bed	yes	16
	Multipart Description/PDF files in .zip description				
	Document Description		**Start**	**End**	
	Specification		1	15	
	Abstract		16	16	
Warnings:					
Information:					
8	Drawings-only black and white line drawings	AnnotatedSheet_Fig_1.pdf	22916 073034896d2a8ad20f1a7463aa1aaebd29612331	no	1
Warnings:					
Information:					
9	Drawings-only black and white line drawings	REPLACEMENTSheet_Fig_1.pdf	22747 efc3c890fed5169a196e50c939137fcbe5844598	no	1
Warnings:					
Information:					
10		IDS_01.pdf	758516 4038c0adaa7bf4fec0e2365371a9526590a55893	yes	7

	Multipart Description/PDF files in .zip description				
	Document Description		**Start**	**End**	
	Transmittal Letter		1	3	
	Information Disclosure Statement (IDS) Form (SB08)		4	7	
Warnings:					
Information:					
11	Foreign Reference	EP0584534A1.pdf	374865 daa67e969afd848af68a2172d85f9751da315388	no	7
Warnings:					
Information:					
12	Foreign Reference	EP0719004A2.pdf	1255520 d63e031d26b98c38621e6d8b0795c1426f90b6f0	no	26
Warnings:					
Information:					
13	Foreign Reference	GB2330491A.pdf	1179859 84b2ce486b625f065739fcbbd985a139fd052fd8	no	33
Warnings:					
Information:					
14	Foreign Reference	JP_H10_1998_-084329.pdf	1648963 40c9155ecb0146a20291f62f095a0a7d62cf0c00	no	18
Warnings:					
Information:					
15	Foreign Reference	JP8321820A.pdf	1472960 24ac2b63d7fa8eb73096977d4f0bb76e9ad5da48	no	15
Warnings:					
Information:					
16	Foreign Reference	WO9832065A2.pdf	1705757 5f1e8762340877fbd918dc70a2b7ca215c1ffb3b	no	44
Warnings:					
Information:					
17	Foreign Reference	WO9922463A1.pdf	1510884 6ace37c2cf40c308a83d67456dbe4f0030fac76b	no	32
Warnings:					
Information:					

18	Foreign Reference	WO99029078.pdf	457552 b4a959a6b0a559f2d90c59bc2c5159e966512e04	no	13
Warnings:					
Information:					
19	Non Patent Literature	Bauml_Reducing.pdf	206575 2870f9e075f40e668b3949db807f17ca765a9ae1	no	2
Warnings:					
Information:					
20	Non Patent Literature	HENKEL_Analog_Codes_for_Peak-to-Average_Ratio_Reduction.pdf	350745 2c1b320e0b94c6d90f5c272e2987ed97d0eaf570	no	5
Warnings:					
Information:					
21	Non Patent Literature	NARAHASHI_New_phasing_scheme_of_N_multiple_carriers.pdf	147248 8c45df546b08740ad1dd0eb9b327bfe403aa268c	no	2
Warnings:					
Information:					
22	Non Patent Literature	TELLADO_Revisiting_DMTs_peak-to-average_ratio.pdf	972642 df9cb589d6b86d63ba05051c152c86e9cff542a1	no	14
Warnings:					
Information:					
23	Non Patent Literature	TELLAMBURA_A_coding_technique_for_reducing_peak-to-average.pdf	277399 4933268ef1c93386e1aacd07f8691a3022929b4c	no	5
Warnings:					
Information:					
24	Non Patent Literature	TELLAMBURA_Phase_optimisation_criterion_for_reducing_peak-to-average.pdf	231957 dbae4da1faf4a5eeac61904a7b28c8b9d2088382	no	2
Warnings:					
Information:					
25	Non Patent Literature	VAN_EETVELT_Peak_to_average_power_reduction.pdf	193140 13b49ed5b534c38620bc3af3fd93c2ac1ea4afac	no	2
Warnings:					
Information:					
26	Non Patent Literature	5550-47-PCT_Invite_to_Pay_Fees_03-23-2001.pdf	540050 227f1e5d63ca3b470ec978bce1dd87ff72f90ce6	no	6
Warnings:					
Information:					

27	Non Patent Literature	5550-47-PCT_Invite_to_Pay_Fees_11-14-2001.pdf	206677 8fb2afa439380e92f947f86b614a23392161df70	no	2
Warnings:					
Information:					
28	Non Patent Literature	5550-47-PCT_Annex.pdf	78735 d4efd5b41789dbb561f40a0cbbdbe547f93cb9da	no	3
Warnings:					
Information:					
29	Non Patent Literature	5550-47-PCT_ISR_06-12-2001.pdf	933284 cf7fcbf4efbcdbe9dcfd0606d16824bb2c8be5bc	no	10
Warnings:					
Information:					
30	Non Patent Literature	5550-47-PCT_IPER.pdf	254373 f0cc0f24d93aaf6927e25ae3344f3755192fcc91	no	6
Warnings:					
Information:					
31	Non Patent Literature	5550-47-PCT_Written_Opinion_2001-12-18.pdf	184614 bedc3d6d7e70564f2cf26bfc6fa7930a6e0a678d	no	6
Warnings:					
Information:					
32	Non Patent Literature	5550-47-PJP_OA_3-3-08.pdf	239891 51dea09ec4c4130a741e3d331e1e8cfa31a67233	no	4
Warnings:					
Information:					
33	Non Patent Literature	5550-47-PJP_OA_11-4-08.pdf	137000 46159ab02ab5c03caf5c5b33b9a18e570e17f14f	no	3
Warnings:					
Information:					
34	Non Patent Literature	5550-47-PKR_Rejection_2006-11-22.pdf	281029 f95ea0a061977b8a5f939acce4c1eaff1c68f2bf	no	3
Warnings:					
Information:					
35	Non Patent Literature	5550-47_OA_2004-05-04.pdf	351958 09508213fd8563650b43804c9bea177382580dfa	no	12
Warnings:					
Information:					

36	Non Patent Literature	5550-47_NOA_2005-07-05.pdf	292063 25f50caab184e8ea497aa1c7adebaca49522cd65	no	7
Warnings:					
Information:					
37	Non Patent Literature	5550-47-CON_NOA_2007-09-06.pdf	324363 54030f7d58e87f1b18590eac89b2b086d1d4d7a7	no	8
Warnings:					
Information:					
38	Non Patent Literature	5550-47-CON-DIV_NOA_2011-10-17.pdf	448359 ae238c9e3df0d089fef942aeb6fa541fb480038f	no	11
Warnings:					
Information:					
39	Non Patent Literature	5550-47-CON-DIV-CON_NOA_03-20-2012.pdf	1675020 0291b0a566ffbabfdcc7ac055302a5dc2468c96e	no	33
Warnings:					
Information:					
40	Non Patent Literature	5550-47-CON-2_OA_2-6-08.pdf	381810 bb3a2d806d1e7caaeda7cd7eade83670b6f23749	no	10
Warnings:					
Information:					
41	Non Patent Literature	5550-47-CON-2_NOA_10-08-08.pdf	235811 e92225f87acb5d1667ebd6aabf9cd1bec5d24fcc	no	5
Warnings:					
Information:					
42	Non Patent Literature	5550-47-CON-3_OA_10-15-09.pdf	573466 dc8a44f661c43463a4823ee9ea3538767aa66aa0	no	17
Warnings:					
Information:					
43	Non Patent Literature	5550-47-CON-3_NOA_5-18-10.pdf	355056 45e2b2e22f073d4802c5c23182b770d2919bfc83	no	10
Warnings:					
Information:					
44	Non Patent Literature	5550-47-CON-4_NOA_2011-11-17.pdf	359714 bf44ba2299bea4e92ed40cdcac657147e4b9afbb	no	9
Warnings:					
Information:					

45	Fee Worksheet (SB06)	fee-info.pdf	36763 1dbafa48fa7b55dc68fbf6dc9c715c0492594a41	no	2
Warnings:					
Information:					
			Total Files Size (in bytes):	23921261	

This Acknowledgement Receipt evidences receipt on the noted date by the USPTO of the indicated documents, characterized by the applicant, and including page counts, where applicable. It serves as evidence of receipt similar to a Post Card, as described in MPEP 503.

New Applications Under 35 U.S.C. 111
If a new application is being filed and the application includes the necessary components for a filing date (see 37 CFR 1.53(b)-(d) and MPEP 506), a Filing Receipt (37 CFR 1.54) will be issued in due course and the date shown on this Acknowledgement Receipt will establish the filing date of the application.

National Stage of an International Application under 35 U.S.C. 371
If a timely submission to enter the national stage of an international application is compliant with the conditions of 35 U.S.C. 371 and other applicable requirements a Form PCT/DO/EO/903 indicating acceptance of the application as a national stage submission under 35 U.S.C. 371 will be issued in addition to the Filing Receipt, in due course.

New International Application Filed with the USPTO as a Receiving Office
If a new international application is being filed and the international application includes the necessary components for an international filing date (see PCT Article 11 and MPEP 1810), a Notification of the International Application Number and of the International Filing Date (Form PCT/RO/105) will be issued in due course, subject to prescriptions concerning national security, and the date shown on this Acknowledgement Receipt will establish the international filing date of the application.

PTO/SB/14 (11-08)
Approved for use through 01/31/2014. OMB 0651-0032
U.S. Patent and Trademark Office; U.S. DEPARTMENT OF COMMERCE
Under the Paperwork Reduction Act of 1995, no persons are required to respond to a collection of information unless it contains a valid OMB control number.

Application Data Sheet 37 CFR 1.76	Attorney Docket Number	5550-47-CON-DIV-CON-2
	Application Number	
Title of Invention	A SYSTEM AND METHOD FOR DESCRAMBLING THE PHASE OF CARRIERS IN A MULTICARRIER COMMUNICATIONS SYSTEM	

The application data sheet is part of the provisional or nonprovisional application for which it is being submitted. The following form contains the bibliographic data arranged in a format specified by the United States Patent and Trademark Office as outlined in 37 CFR 1.76.
This document may be completed electronically and submitted to the Office in electronic format using the Electronic Filing System (EFS) or the document may be printed and included in a paper filed application.

Secrecy Order 37 CFR 5.2

☐ Portions or all of the application associated with this Application Data Sheet may fall under a Secrecy Order pursuant to 37 CFR 5.2 (Paper filers only. Applications that fall under Secrecy Order may not be filed electronically.)

Applicant Information:

Applicant 1 Remove

Applicant Authority ◉ Inventor ○ Legal Representative under 35 U.S.C. 117 ○ Party of Interest under 35 U.S.C. 118

Prefix	Given Name	Middle Name	Family Name	Suffix
	Marcos	C.	Tzannes	

Residence Information (Select One) ◉ US Residency ○ Non US Residency ○ Active US Military Service

City	Orinda	State/Province	CA	Country of Residence i	US

Citizenship under 37 CFR 1.41(b) i US

Mailing Address of Applicant:

Address 1	121 LaEspiral		
Address 2			
City	Orinda	State/Province	CA
Postal Code	94563	Country i	US

All Inventors Must Be Listed - Additional Inventor Information blocks may be generated within this form by selecting the **Add** button. Add

Correspondence Information:

Enter either Customer Number or complete the Correspondence Information section below.
For further information see 37 CFR 1.33(a).

☐ **An Address is being provided for the correspondence Information of this application.**

Customer Number	62574		
Email Address	jvick@sheridanross.com	Add Email	Remove Email

Application Information:

Title of the Invention	A SYSTEM AND METHOD FOR DESCRAMBLING THE PHASE OF CARRIERS IN A MULTICARRIER COMMUNICATIONS SYSTEM		
Attorney Docket Number	5550-47-CON-DIV-CON-2	Small Entity Status Claimed	☐
Application Type	Nonprovisional		
Subject Matter	Utility		
Suggested Class (if any)		Sub Class (if any)	
Suggested Technology Center (if any)			
Total Number of Drawing Sheets (if any)	2	Suggested Figure for Publication (if any)	

PTO/SB/14 (11-08)
Approved for use through 01/31/2014. OMB 0651-0032
U.S. Patent and Trademark Office; U.S. DEPARTMENT OF COMMERCE
Under the Paperwork Reduction Act of 1995, no persons are required to respond to a collection of information unless it contains a valid OMB control number.

Application Data Sheet 37 CFR 1.76	Attorney Docket Number	5550-47-CON-DIV-CON-2
	Application Number	
Title of Invention	A SYSTEM AND METHOD FOR DESCRAMBLING THE PHASE OF CARRIERS IN A MULTICARRIER COMMUNICATIONS SYSTEM	

Publication Information:

☐ Request Early Publication (Fee required at time of Request 37 CFR 1.219)
☐ **Request Not to Publish.** I hereby request that the attached application not be published under 35 U.S. C. 122(b) and certify that the invention disclosed in the attached application **has not and will not** be the subject of an application filed in another country, or under a multilateral international agreement, that requires publication at eighteen months after filing.

Representative Information:

Representative information should be provided for all practitioners having a power of attorney in the application. Providing this information in the Application Data Sheet does not constitute a power of attorney in the application (see 37 CFR 1.32).
Enter either Customer Number or complete the Representative Name section below. If both sections are completed the Customer Number will be used for the Representative Information during processing.

Please Select One:	◉ Customer Number	○ US Patent Practitioner	○ Limited Recognition (37 CFR 11.9)
Customer Number	62574		

Domestic Benefit/National Stage Information:

This section allows for the applicant to either claim benefit under 35 U.S.C. 119(e), 120, 121, or 365(c) or indicate National Stage entry from a PCT application. Providing this information in the application data sheet constitutes the specific reference required by 35 U.S.C. 119(e) or 120, and 37 CFR 1.78(a)(2) or CFR 1.78(a)(4), and need not otherwise be made part of the specification.

Prior Application Status	Pending		Remove
Application Number	Continuity Type	Prior Application Number	Filing Date (YYYY-MM-DD)
	Continuation of	13/284549	2011-10-28

Prior Application Status	Patented				Remove
Application Number	Continuity Type	Prior Application Number	Filing Date (YYYY-MM-DD)	Patent Number	Issue Date (YYYY-MM-DD)
13/284549	Continuation of	11/860080	2007-09-24	8073041	2011-12-06

Prior Application Status	Patented				Remove
Application Number	Continuity Type	Prior Application Number	Filing Date (YYYY-MM-DD)	Patent Number	Issue Date (YYYY-MM-DD)
11/860080	Division of	11/211535	2005-08-26	7292627	2007-11-06

Prior Application Status	Patented				Remove
Application Number	Continuity Type	Prior Application Number	Filing Date (YYYY-MM-DD)	Patent Number	Issue Date (YYYY-MM-DD)
11/211535	Continuation of	09/710310	2000-11-09	6961369	2005-11-01

Prior Application Status	Expired		Remove
Application Number	Continuity Type	Prior Application Number	Filing Date (YYYY-MM-DD)
09/710310	non provisional of	60/164134	1999-11-09

PTO/SB/14 (11-08)
Approved for use through 01/31/2014. OMB 0651-0032
U.S. Patent and Trademark Office; U.S. DEPARTMENT OF COMMERCE
Under the Paperwork Reduction Act of 1995, no persons are required to respond to a collection of information unless it contains a valid OMB control number.

Application Data Sheet 37 CFR 1.76	Attorney Docket Number	5550-47-CON-DIV-CON-2
	Application Number	
Title of Invention	A SYSTEM AND METHOD FOR DESCRAMBLING THE PHASE OF CARRIERS IN A MULTICARRIER COMMUNICATIONS SYSTEM	

Additional Domestic Benefit/National Stage Data may be generated within this form by selecting the **Add** button. Add

Foreign Priority Information:

This section allows for the applicant to claim benefit of foreign priority and to identify any prior foreign application for which priority is not claimed. Providing this information in the application data sheet constitutes the claim for priority as required by 35 U.S.C. 119(b) and 37 CFR 1.55(a).

Remove

Application Number	Country [i]	Parent Filing Date (YYYY-MM-DD)	Priority Claimed
			○ Yes ◉ No

Additional Foreign Priority Data may be generated within this form by selecting the **Add** button. Add

Assignee Information:

Providing this information in the application data sheet does not substitute for compliance with any requirement of part 3 of Title 37 of the CFR to have an assignment recorded in the Office.

Assignee 1 Remove

If the Assignee is an Organization check here. ☒			
Organization Name	AWARE, INC.		
Mailing Address Information:			
Address 1	40 Middlesex Turnpike		
Address 2			
City	Bedford	**State/Province**	MA
Country [i]	US	Postal Code	01730-1432
Phone Number		Fax Number	
Email Address			

Additional Assignee Data may be generated within this form by selecting the **Add** button. Add

Signature:

A signature of the applicant or representative is required in accordance with 37 CFR 1.33 and 10.18. Please see 37 CFR 1.4(d) for the form of the signature.

Signature	/Jason H. Vick/			Date (YYYY-MM-DD)	2012-04-04
First Name	Jason H.	Last Name	Vick	Registration Number	45285

PTO/SB/14 (11-08)
Approved for use through 01/31/2014. OMB 0651-0032
U.S. Patent and Trademark Office; U.S. DEPARTMENT OF COMMERCE
Under the Paperwork Reduction Act of 1995, no persons are required to respond to a collection of information unless it contains a valid OMB control number.

Application Data Sheet 37 CFR 1.76	Attorney Docket Number	5550-47-CON-DIV-CON-2
	Application Number	
Title of Invention	A SYSTEM AND METHOD FOR DESCRAMBLING THE PHASE OF CARRIERS IN A MULTICARRIER COMMUNICATIONS SYSTEM	

This collection of information is required by 37 CFR 1.76. The information is required to obtain or retain a benefit by the public which is to file (and by the USPTO to process) an application. Confidentiality is governed by 35 U.S.C. 122 and 37 CFR 1.14. This collection is estimated to take 23 minutes to complete, including gathering, preparing, and submitting the completed application data sheet form to the USPTO. Time will vary depending upon the individual case. Any comments on the amount of time you require to complete this form and/or suggestions for reducing this burden, should be sent to the Chief Information Officer, U.S. Patent and Trademark Office, U.S. Department of Commerce, P.O. Box 1450, Alexandria, VA 22313-1450. DO NOT SEND FEES OR COMPLETED FORMS TO THIS ADDRESS. **SEND TO: Commissioner for Patents, P.O. Box 1450, Alexandria, VA 22313-1450.**

Privacy Act Statement

The Privacy Act of 1974 (P.L. 93-579) requires that you be given certain information in connection with your submission of the attached form related to a patent application or patent. Accordingly, pursuant to the requirements of the Act, please be advised that: (1) the general authority for the collection of this information is 35 U.S.C. 2(b)(2); (2) furnishing of the information solicited is voluntary; and (3) the principal purpose for which the information is used by the U.S. Patent and Trademark Office is to process and/or examine your submission related to a patent application or patent. If you do not furnish the requested information, the U.S. Patent and Trademark Office may not be able to process and/or examine your submission, which may result in termination of proceedings or abandonment of the application or expiration of the patent.

The information provided by you in this form will be subject to the following routine uses:

1. The information on this form will be treated confidentially to the extent allowed under the Freedom of Information Act (5 U.S.C. 552) and the Privacy Act (5 U.S.C. 552a). Records from this system of records may be disclosed to the Department of Justice to determine whether the Freedom of Information Act requires disclosure of these records.

2. A record from this system of records may be disclosed, as a routine use, in the course of presenting evidence to a court, magistrate, or administrative tribunal, including disclosures to opposing counsel in the course of settlement negotiations.

3. A record in this system of records may be disclosed, as a routine use, to a Member of Congress submitting a request involving an individual, to whom the record pertains, when the individual has requested assistance from the Member with respect to the subject matter of the record.

4. A record in this system of records may be disclosed, as a routine use, to a contractor of the Agency having need for the information in order to perform a contract. Recipients of information shall be required to comply with the requirements of the Privacy Act of 1974, as amended, pursuant to 5 U.S.C. 552a(m).

5. A record related to an International Application filed under the Patent Cooperation Treaty in this system of records may be disclosed, as a routine use, to the International Bureau of the World Intellectual Property Organization, pursuant to the Patent Cooperation Treaty.

6. A record in this system of records may be disclosed, as a routine use, to another federal agency for purposes of National Security review (35 U.S.C. 181) and for review pursuant to the Atomic Energy Act (42 U.S.C. 218(c)).

7. A record from this system of records may be disclosed, as a routine use, to the Administrator, General Services, or his/her designee, during an inspection of records conducted by GSA as part of that agency's responsibility to recommend improvements in records management practices and programs, under authority of 44 U.S.C. 2904 and 2906. Such disclosure shall be made in accordance with the GSA regulations governing inspection of records for this purpose, and any other relevant (i.e., GSA or Commerce) directive. Such disclosure shall not be used to make determinations about individuals.

8. A record from this system of records may be disclosed, as a routine use, to the public after either publication of the application pursuant to 35 U.S.C. 122(b) or issuance of a patent pursuant to 35 U.S.C. 151. Further, a record may be disclosed, subject to the limitations of 37 CFR 1.14, as a routine use, to the public if the record was filed in an application which became abandoned or in which the proceedings were terminated and which application is referenced by either a published application, an application open to public inspections or an issued patent.

9. A record from this system of records may be disclosed, as a routine use, to a Federal, State, or local law enforcement agency, if the USPTO becomes aware of a violation or potential violation of law or regulation.

DECLARATION AND POWER OF ATTORNEY FOR UTILITY OR DESIGN PATENT APPLICATION		
	Attorney Docket No.	AWR-017 (457/19)
	First Named Inventor	Tzannes
	COMPLETE IF KNOWN	
	Application Serial Number	Not Yet Assigned
	Filing Date	Herewith
	Group Art Unit	Not Yet Assigned
	Examiner Name	Not Yet Assigned

☒ Declaration Submitted with Initial Filing ☐ Declaration Submitted after Initial Filing (surcharge 37 CFR 1.16(e) required)

As a below named inventor, I hereby declare that:

My residence, post office address, and citizenship are as stated below next to my name.

I believe I am the original, first and sole inventor (if only one name is listed below) or an original, first and joint inventor (if plural names are listed below) of the subject matter which is claimed and for which a patent is sought on the invention entitled:

A System And Method For Scrambling The Phase Of The Carriers In A Multicarrier Communications System

(Title of the Invention)

the specification of which

☒ is attached hereto

OR

☐ was filed on (MM/DD/YYYY) [ ] as United States Application Serial Number or PCT International Application Number [ ] and was amended on (MM/DD/YYYY) [ ] *(if applicable)*.

I hereby state that I have reviewed and understand the contents of the above identified specification, including the claims, as amended by any amendment specifically referred to above.

I acknowledge the duty to disclose to the Patent Office all information known by me to be material to patentability as defined in 37 CFR 1.56.

I hereby claim foreign priority benefits under 35 U.S.C. 119(a)-(d) or 365(b) of any foreign application(s) for patent or inventor's certificate, or 365(a) of any PCT international application which designated at least one country other than the United States of America, listed below and have also identified below, by checking the box, any foreign application for patent or inventor's certificate, or of any PCT international application having a filing date before that of the application on which priority is claimed.

Prior Foreign Application Number(s)	Country	Foreign Filing Date (MM/DD/YYYY)	Priority Not Claimed	Certified Copy Attached? YES	NO
			☐	☐	☐
			☐	☐	☐
			☐	☐	☐
			☐	☐	☐

☐ Additional foreign application numbers are listed on a supplemental priority data sheet attached hereto.

I hereby claim the benefit under 35 U.S.C. 119(e) of any United States provisional application(s) listed below.

Application Serial Number(s)	Filing Date (MM/DD/YYYY)	
60/164,134	11/09/1999	☐ Additional provisional application serial numbers are listed on a supplemental priority data sheet attached hereto.

DECLARATION – Utility or Design Patent Application

I hereby claim the benefit under 35 U.S.C. 120 of any United States application(s), or 365(c), of any PCT international application designating the United States of America, listed below and, insofar as the subject matter of each of the claims of this application is not disclosed in the prior United States or PCT International application in the manner provided by the first paragraph of 35 U.S.C. 112, I acknowledge the duty to disclose information which is material to patentability as defined in 37 CFR 1.56 which became available between the filing date of the prior application and the national or PCT international filing date of this application.

U.S. Parent Application or PCT Parent Serial Number	Parent Filing Date (MM/DD/YYYY)	Parent Patent Number *(if applicable)*

☐ Additional U.S. or PCT international application numbers are listed on a supplemental priority data sheet attached hereto.

As a named inventor, I hereby appoint the following registered practitioners to prosecute this application and to transact all business in the Patent and Trademark Office connected therewith: ☐ Customer Number

OR

☒ Registered practitioner(s) name/registration number listed below

→ *Place Customer Number Bar Code Label Here*

Name	Registration Number	Name	Registration Number
Steven M. Bauer	31,481	Thomas C. Meyers	36,989
John V. Bianco	36,748	Joseph B. Milstein	42,897
Isabelle A.S. Blundell	43,321	David G. Miranda	42,898
Maureen A. Bresnahan	44,559	Ronda P. Moore	44,244
Michael H. Brodowski	41,640	Indranil Mukerji	P-46,944
Jennifer A. Camacho	43,526	Edmund R. Pitcher	27,829
Joseph A. Capraro, Jr.	36,471	Michael A. Rodriguez	41,274
John J. Cotter	38,116	Jamie H. Rose	45,054
John V. Forcier	42,545	R. Stephen Rosenholm	45,283
Steven J. Frank	33,497	Christopher W. Stamos	35,370
Brian M. Gaff	44,691	Joseph P. Sullivan	45,349
Michael J. Giannetta	42,574	Robert J. Tosti	35,393
Duncan A. Greenhalgh	38,678	Thomas A. Turano	35,722
William G. Guerin	41,047	Michael J. Twomey	38,349
Jonathan A. Harris	44,744	Christine C. Vito	39,061
Ira V. Heffan	41,059	Patrick R.H. Waller	41,418
Danielle L. Herritt	43,670	Daniel A. Wilson	45,508
Douglas J. Kline	35,574	Yin P. Zhang	44,372
John D. Lanza	40,060		
Kurt W. Lockwood	40,704		

☐ Additional registered practitioners named on supplemental Registered Practitioner Information sheet attached hereto.

Direct all correspondence to:

Patent Administrator
Testa, Hurwitz & Thibeault, LLP
High Street Tower
125 High Street
Boston, MA 02110
Tel. No.: (617) 248-7000
Fax No.: (617) 248-7100

I hereby declare that all statements made herein of my own knowledge are true and that all statements made on information and belief are believed to be true; and further that these statements were made with the knowledge that willful false statements and the like so made are punishable by fine or imprisonment, or both, under 18 U.S.C. 1001 and that such willful false statements may jeopardize the validity of the application or any patent issued thereon.

Name of Sole or First Inventor:	☐ A petition has been filed for this unsigned inventor							
Given Name (first and middle [if any])			Family Name or Surname					
Marcos C.			**Tzannes**					
Inventor's Signature						Date	Nov 9, 2000	
Residence	City **Orinda**	State **CA**	Country **USA**	Citizenship **USA**				
Post Office Address	**121 LaEspiral**							
P.O. Address (line 2)	City **Orinda**	State **CA**	ZIP **94563**	Country **USA**				
☐ Additional inventors are being named on the _____ supplemental Additional Inventor(s) sheet(s) attached hereto.								
Name of Additional Joint Inventor, if any:	☐ A petition has been filed for this unsigned inventor							
Given Name (first and middle [if any])			Family Name or Surname					
Inventor's Signature						Date		
Residence	City	State	Country	Citizenship				
Post Office Address								
P.O. Address (line 2)	City	State	ZIP	Country				
Name of Additional Joint Inventor, if any:	☐ A petition has been filed for this unsigned inventor							
Given Name (first and middle [if any])			Family Name or Surname					
Inventor's Signature						Date		
Residence	City	State	Country	Citizenship				
Post Office Address								
P.O. Address (line 2)	City	State	ZIP	Country				

PTO/SB/80 (01-06)
Approved for use through 12/31/2006. OMB 0651-0035
U.S. Patent and Trademark Office; U.S. DEPARTMENT OF COMMERCE
Under the Paperwork Reduction Act of 1995, no persons are required to respond to a collection of information unless it displays a valid OMB control number.

POWER OF ATTORNEY TO PROSECUTE APPLICATIONS BEFORE THE USPTO

I hereby revoke all previous powers of attorney given in the application identified in the attached statement under 37 CFR 3.73(b).

I hereby appoint:

☑ Practitioners associated with the Customer Number: 62574

OR

☐ Practitioner(s) named below (if more than ten patent practitioners are to be named, then a customer number must be used):

Name	Registration Number	Name	Registration Number

as attorney(s) or agent(s) to represent the undersigned before the United States Patent and Trademark Office (USPTO) in connection with any and all patent applications assigned only to the undersigned according to the USPTO assignment records or assignment documents attached to this form in accordance with 37 CFR 3.73(b).

Please change the correspondence address for the application identified in the attached statement under 37 CFR 3.73(b) to:

☑ The address associated with Customer Number: 62574

OR

☐ Firm or Individual Name			
Address			
City		State	Zip
Country			
Telephone		Email	

Assignee Name and Address:

AWARE, INC.
40 Middlesex Turnpike
Bedford, MA 07130-1423

A copy of this form, together with a statement under 37 CFR 3.73(b) (Form PTO/SB/96 or equivalent) is required to be filed in each application in which this form is used. The statement under 37 CFR 3.73(b) may be completed by one of the practitioners appointed in this form if the appointed practitioner is authorized to act on behalf of the assignee, and must identify the application in which this Power of Attorney is to be filed.

SIGNATURE of Assignee of Record

The individual whose signature and title is supplied below is authorized to act on behalf of the assignee

Signature	Kevin T. Russell	Date	1/8/09
Name	Kevin T. Russell	Telephone	781-687-1535
Title	VP, General Counsel		

This collection of information is required by 37 CFR 1.31, 1.32 and 1.33. The information is required to obtain or retain a benefit by the public which is to file (and by the USPTO to process) an application. Confidentiality is governed by 35 U.S.C. 122 and 37 CFR 1.11 and 1.14. This collection is estimated to take 3 minutes to complete, including gathering, preparing, and submitting the completed application form to the USPTO. Time will vary depending upon the individual case. Any comments on the amount of time you require to complete this form and/or suggestions for reducing this burden, should be sent to the Chief Information Officer, U.S. Patent and Trademark Office, U.S. Department of Commerce, P.O. Box 1450, Alexandria, VA 22313-1450. DO NOT SEND FEES OR COMPLETED FORMS TO THIS ADDRESS. **SEND TO: Commissioner for Patents, P.O. Box 1450, Alexandria, VA 22313-1450.**

If you need assistance in completing the form, call 1-800-PTO-9199 and select option 2.

Electronic Acknowledgement Receipt	
EFS ID:	12471456
Application Number:	13439605
International Application Number:	
Confirmation Number:	4069
Title of Invention:	A SYSTEM AND METHOD FOR DESCRAMBLING THE PHASE OF CARRIERS IN A MULTICARRIER COMMUNICATIONS SYSTEM
First Named Inventor/Applicant Name:	Marcos C. Tzannes
Customer Number:	62574
Filer:	Jason Vick/Joanne Vos
Filer Authorized By:	Jason Vick
Attorney Docket Number:	5550-47-CON-DIV-CON-2
Receipt Date:	04-APR-2012
Filing Date:	
Time Stamp:	18:04:01
Application Type:	Utility under 35 USC 111(a)

Payment information:

Submitted with Payment	no

File Listing:

Document Number	Document Description	File Name	File Size(Bytes)/ Message Digest	Multi Part /.zip	Pages (if appl.)
1		Statement_Under_373b_w_POA.pdf	255320 3cb349bbbcd4d991457d9419107ce202e1a8f38f	yes	2

	Multipart Description/PDF files in .zip description		
	Document Description	**Start**	**End**
	Assignee showing of ownership per 37 CFR 3.73(b).	1	1
	Power of Attorney	2	2
Warnings:			
Information:			
	Total Files Size (in bytes):	255320	

This Acknowledgement Receipt evidences receipt on the noted date by the USPTO of the indicated documents, characterized by the applicant, and including page counts, where applicable. It serves as evidence of receipt similar to a Post Card, as described in MPEP 503.

New Applications Under 35 U.S.C. 111
If a new application is being filed and the application includes the necessary components for a filing date (see 37 CFR 1.53(b)-(d) and MPEP 506), a Filing Receipt (37 CFR 1.54) will be issued in due course and the date shown on this Acknowledgement Receipt will establish the filing date of the application.

National Stage of an International Application under 35 U.S.C. 371
If a timely submission to enter the national stage of an international application is compliant with the conditions of 35 U.S.C. 371 and other applicable requirements a Form PCT/DO/EO/903 indicating acceptance of the application as a national stage submission under 35 U.S.C. 371 will be issued in addition to the Filing Receipt, in due course.

New International Application Filed with the USPTO as a Receiving Office
If a new international application is being filed and the international application includes the necessary components for an international filing date (see PCT Article 11 and MPEP 1810), a Notification of the International Application Number and of the International Filing Date (Form PCT/RO/105) will be issued in due course, subject to prescriptions concerning national security, and the date shown on this Acknowledgement Receipt will establish the international filing date of the application.

PTO/SB/96 (07-09)
Approved for use through 07/31/2012. OMB 0651-0031
U.S. Patent and Trademark Office; U.S. DEPARTMENT OF COMMERCE
Under the Paperwork Reduction Act of 1995, no persons are required to respond to a collection of information unless it displays a valid OMB control number.

STATEMENT UNDER 37 CFR 3.73(b)

Applicant/Patent Owner: AWARE, INC.

Application No./Patent No.: 13/439,605 Filed/Issue Date: April 4, 2012

Titled: SYSTEM AND METHOD FOR DESCRAMBLING THE PHASE OF CARRIERS IN A MULTICARRIER COMMUNICATIONS SYSTEM

AWARE, INC. , a Corporation
(Name of Assignee) (Type of Assignee, e.g., corporation, partnership, university, government agency, etc.

states that it is:

1. [X] the assignee of the entire right, title, and interest in;

2. [ ] an assignee of less than the entire right, title, and interest in
(The extent (by percentage) of its ownership interest is _____ %); or

3. [ ] the assignee of an undivided interest in the entirety of (a complete assignment from one of the joint inventors was made)

the patent application/patent identified above, by virtue of either:

A. [X] An assignment from the inventor(s) of the patent application/patent identified above. The assignment was recorded in the United States Patent and Trademark Office at Reel 010877, Frame 0307, or for which a copy therefore is attached.

OR

B. [ ] A chain of title from the inventor(s), of the patent application/patent identified above, to the current assignee as follows:

1. From: _____ To: _____
The document was recorded in the United States Patent and Trademark Office at
Reel _____, Frame _____, or for which a copy thereof is attached.

2. From: _____ To: _____
The document was recorded in the United States Patent and Trademark Office at
Reel _____, Frame _____, or for which a copy thereof is attached.

3. From: _____ To: _____
The document was recorded in the United States Patent and Trademark Office at
Reel _____, Frame _____, or for which a copy thereof is attached.

[ ] Additional documents in the chain of title are listed on a supplemental sheet(s).

[X] As required by 37 CFR 3.73(b)(1)(i), the documentary evidence of the chain of title from the original owner to the assignee was, or concurrently is being, submitted for recordation pursuant to 37 CFR 3.11.

[NOTE: A separate copy (*i.e.*, a true copy of the original assignment document(s)) must be submitted to Assignment Division in accordance with 37 CFR Part 3, to record the assignment in the records of the USPTO. See MPEP 302.08]

The undersigned (whose title is supplied below) is authorized to act on behalf of the assignee.

_____ April 4, 2012
Signature Date

Jason H. Vick Attorney for Assignee
Printed or Typed Name Title

This collection of information is required by 37 CFR 3.73(b). The information is required to obtain or retain a benefit by the public which is to file (and by the USPTO to process) an application. Confidentiality is governed by 35 U.S.C. 122 and 37 CFR 1.11 and 1.14. This collection is estimated to take 12 minutes to complete, including gathering, preparing, and submitting the completed application form to the USPTO. Time will vary depending upon the individual case. Any comments on the amount of time you require to complete this form and/or suggestions for reducing this burden, should be sent to the Chief Information Officer, U.S. Patent and Trademark Office, U.S. Department of Commerce, P.O. Box 1450, Alexandria, VA 22313-1450. DO NOT SEND FEES OR COMPLETED FORMS TO THIS ADDRESS. **SEND TO: Commissioner for Patents, P.O. Box 1450, Alexandria, VA 22313-1450.**

If you need assistance in completing the form, call 1-800-PTO-9199 and select option 2.