US005953506A

United States Patent [19]

Kalra et al.

[11] **Patent Number: 5,953,506**

[45] **Date of Patent: Sep. 14, 1999**

[54] **METHOD AND APPARATUS THAT PROVIDES A SCALABLE MEDIA DELIVERY SYSTEM**

[75] Inventors: **Devendra Kalra**, Fremont; **Karnamadakala Krishnamohan**, San Jose; **Venkatasubbarao Ramamoorthy**, Pleasanton; **Jeyendran Balakrishnan**, Sunnyvale; **Timothy J. Burr**, San Jose; **Kowsik Guruswamy**, Mountain View, all of Calif.

[73] Assignee: **Adaptive Media Technologies**, Sunnyvale, Calif.

[21] Appl. No.: **08/768,114**

[22] Filed: **Dec. 17, 1996**

[51] **Int. Cl.**[6] **G06F 15/16**; H04L 7/30

[52] **U.S. Cl.** **395/200.61**; 345/428; 348/420

[58] **Field of Search** 395/200.61; 370/431, 370/437; 345/302, 428; 348/17, 18, 19, 20, 384, 387, 390, 420

[56] **References Cited**

U.S. PATENT DOCUMENTS

4,672,444	6/1987	Bergen et al.	348/441
5,068,726	11/1991	Kondo et al.	348/412
5,196,933	3/1993	Henot	348/419
5,574,724	11/1996	Bales et al.	370/410
5,612,742	3/1997	Krause et al.	348/385
5,659,691	8/1997	Durward et al.	345/329
5,675,721	10/1997	Freedman et al.	345/502
5,699,361	12/1997	Ding et al.	370/431
5,737,495	4/1998	Adams et al.	395/200.49

FOREIGN PATENT DOCUMENTS

0 577 327 A1	1/1994	European Pat. Off. .
0 593 013 A2	4/1994	European Pat. Off. .
0 661 826 A2	7/1995	European Pat. Off. .
0 661 885 A1	7/1995	European Pat. Off. .
0 687 112 A2	12/1995	European Pat. Off. .
0 739 140 A2	10/1996	European Pat. Off. .
0 751 685 A1	1/1997	European Pat. Off. .
WO 94/11993	5/1994	WIPO .
WO 96/14711	5/1996	WIPO .
WO 96/23280	8/1996	WIPO .
WO 97/15149	4/1997	WIPO .

OTHER PUBLICATIONS

Moura et al. "Retrieving quality video across heterogeneous networks", IEEE Personal Communications, Feb. 1996, pp. 44–54.

IBM Technical Disclosure Bulletin "Multi–Rate Video Transmission Scheme", vol. 38 No. 12, Dec. 1995. pp. 59–62.

Doenges, P.K. et al., "Audio/video and synthetic graphics/audio for mixed media," *Signal Processing: Image Communication*, vol. 9, No. 4, May 1997.

Arikawa, M. et al., "Dynamic LoD for QoS Management in the Next Generation VRML," *Proceedings of the Intl. Conf. on Multimedia Computing and Systems*, Jun. 17, 1996.

(List continued on next page.)

Primary Examiner—Dung C. Dinh
Attorney, Agent, or Firm—Pillsbury Madison & Sutro LLP

[57] **ABSTRACT**

The present invention provides an apparatus and method for encoding, storing, transmitting and decoding multimedia information in the form of scalable, streamed digital data. A base stream containing basic informational content and subsequent streams containing additive informational content are initially created from standard digital multimedia data by a transcoder. Client computers, each of which may have different configurations and capabilities are capable of accessing a stream server that contains the scalable streamed digital data. Each different client computer, therefore, may access different stream combinations according to a profile associated with each different client computer. Thus, the streams accessed from the server are tailored to match the profile of each client computer so that the best combination of streams can be provided to maximize the resolution of the 3D, audio and video components.

80 Claims, 39 Drawing Sheets

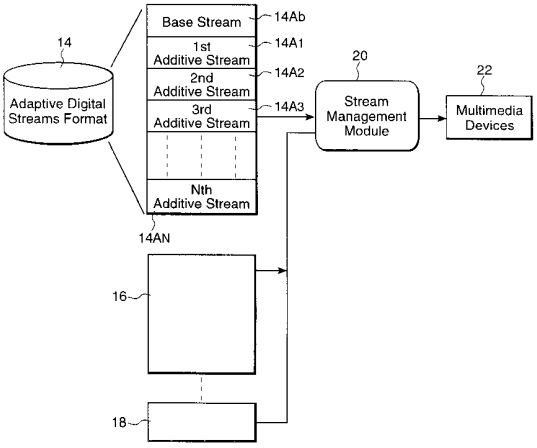

OTHER PUBLICATIONS

Kudumakis, P.E. et al., "Wavelet packet Based Scalable Audio Coding," 1996 IEEE Intl. Symposium on Circuits and Systems (*ISCAS*) *Circuits and Systems Connecting the World*, Atlanta, May 12–15, 1996; vol. 2, May 1996, *Inst. of Electrical and Electronics Engineers*, pp. 41–44.

"Transmission of non–telephone signals; information technology—generic coding of moving pictures and associated audio information: video" *ITU–T Telecommunication Standardization Sector of ITU*, Jul. 1995.

Riegel, T.; "Coding of combined natural and computer rendered image sequences," *Proc. of SPIE* vol. 2451, 1995, pp. 207–211.

Broll, W., et al.; "VRML: Today and Tomorrow," *Computers & Graphics* vol. 20, No. 3, May 1996, pp. 427–434.

Funkhouser, T.A. and Sequin, C.H., "Adaptive Display Algorithm for Interactive Frame Rates during Visualization of Complex Virtual Environments," Computer Graphics Proceedings, Annual Conf. Series 1993, pp. 247–254.

Hoppe, H., *Progressive Meshes*, Computer Graphics Proceedings, Annual Conference Series, 1996, pp. 99–108.

Popovic, J.; and Hoppe, H., *Progressive Simplicial Complexes*, Computer Graphics (SIGGRAPH '97 Proceedings), pp. 217–224.

Clarke, R.J., *Standards for Image Sequence Coding* from Digital Compression of Still Images and Video, 1995, pp. 285–299.

Kuan Hui Tan/Mohammad Ohanbari, *Layered Image Coding Using the DCT Pyramid* from IEEE Transactions On Image Processing, Apr. 1995, pp. 512–516.

Fig. 1

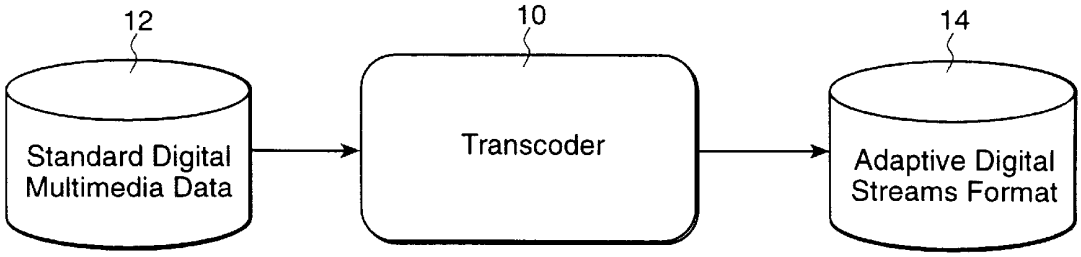

Fig. 2A

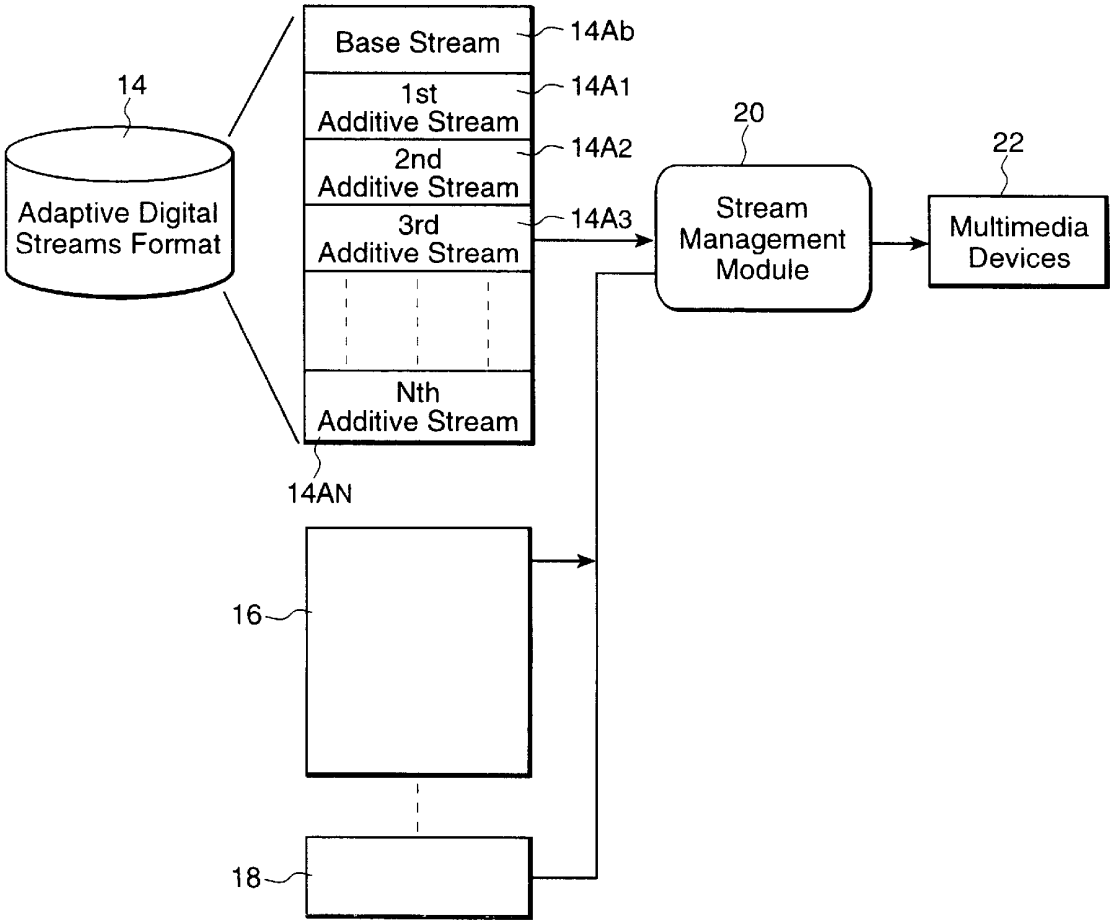

Fig. 2B

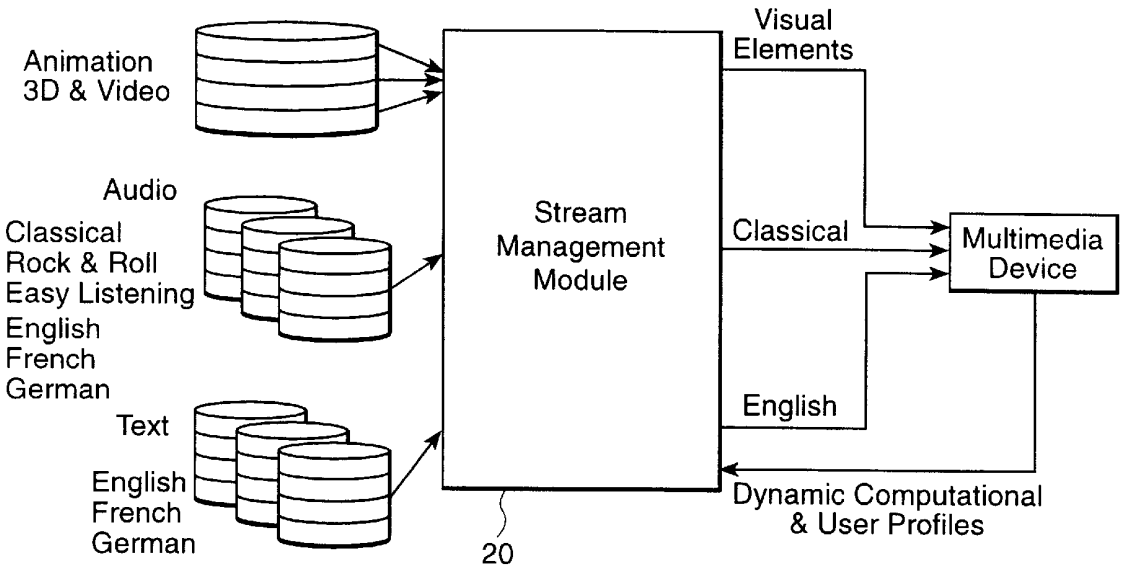

Fig. 3

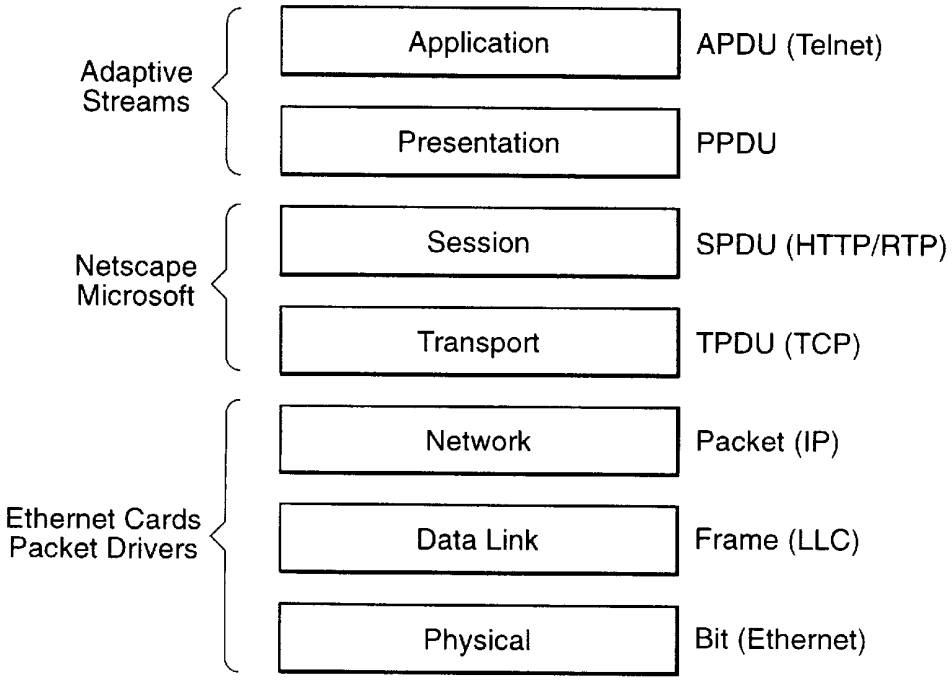

Fig. 4

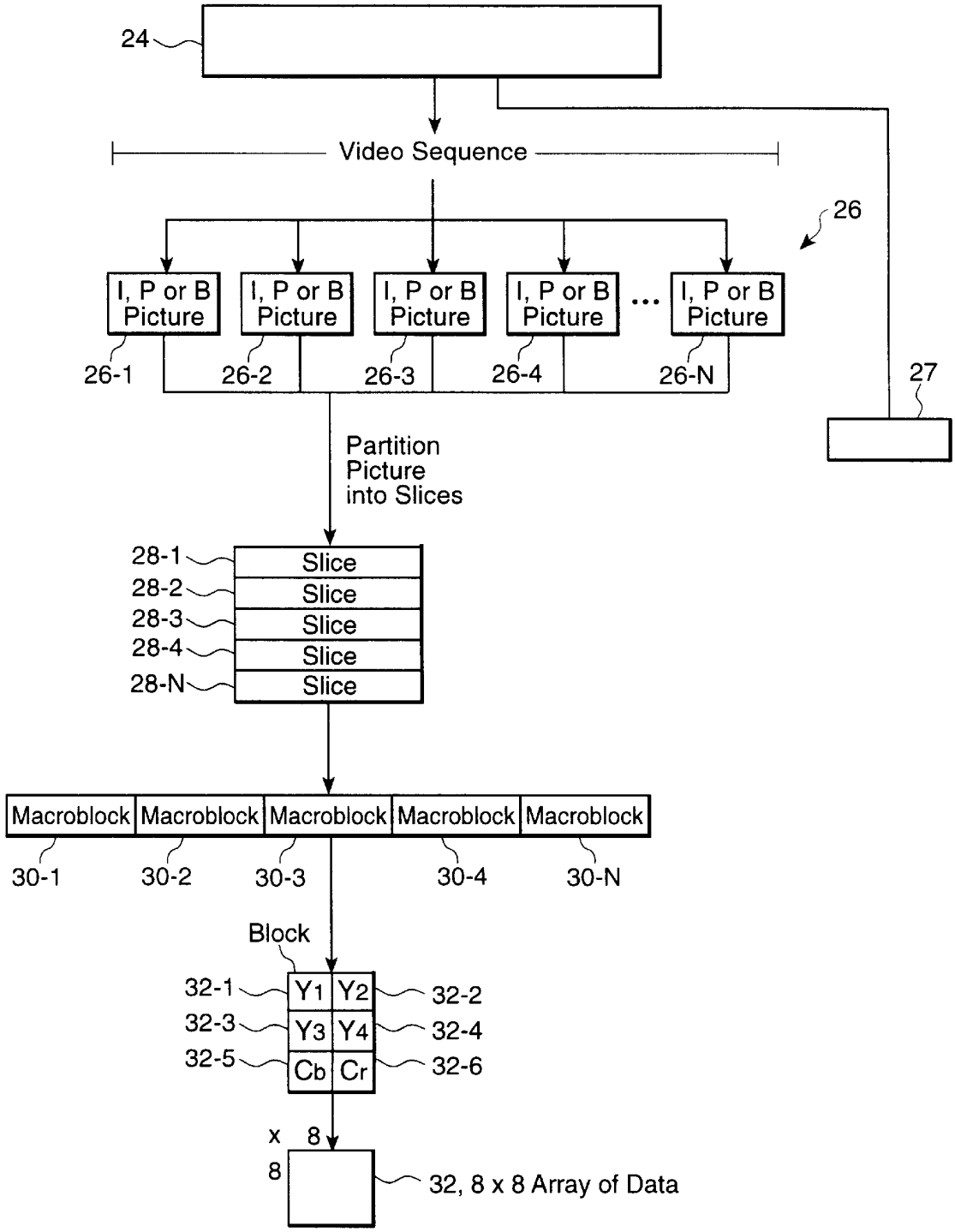

DOCKET ALARM

Explore Litigation Insights

Docket Alarm provides insights to develop a more informed litigation strategy and the peace of mind of knowing you're on top of things.

Real-Time Litigation Alerts

Keep your litigation team up-to-date with **real-time alerts** and advanced team management tools built for the enterprise, all while greatly reducing PACER spend.

Our comprehensive service means we can handle Federal, State, and Administrative courts across the country.

Advanced Docket Research

With over 230 million records, Docket Alarm's cloud-native docket research platform finds what other services can't. Coverage includes Federal, State, plus PTAB, TTAB, ITC and NLRB decisions, all in one place.

Identify arguments that have been successful in the past with full text, pinpoint searching. Link to case law cited within any court document via Fastcase.

Analytics At Your Fingertips

Learn what happened the last time a particular judge, opposing counsel or company faced cases similar to yours.

Advanced out-of-the-box PTAB and TTAB analytics are always at your fingertips.

API

Docket Alarm offers a powerful API (application programming interface) to developers that want to integrate case filings into their apps.

LAW FIRMS

Build custom dashboards for your attorneys and clients with live data direct from the court.

Automate many repetitive legal tasks like conflict checks, document management, and marketing.

FINANCIAL INSTITUTIONS

Litigation and bankruptcy checks for companies and debtors.

E-DISCOVERY AND LEGAL VENDORS

Sync your system to PACER to automate legal marketing.