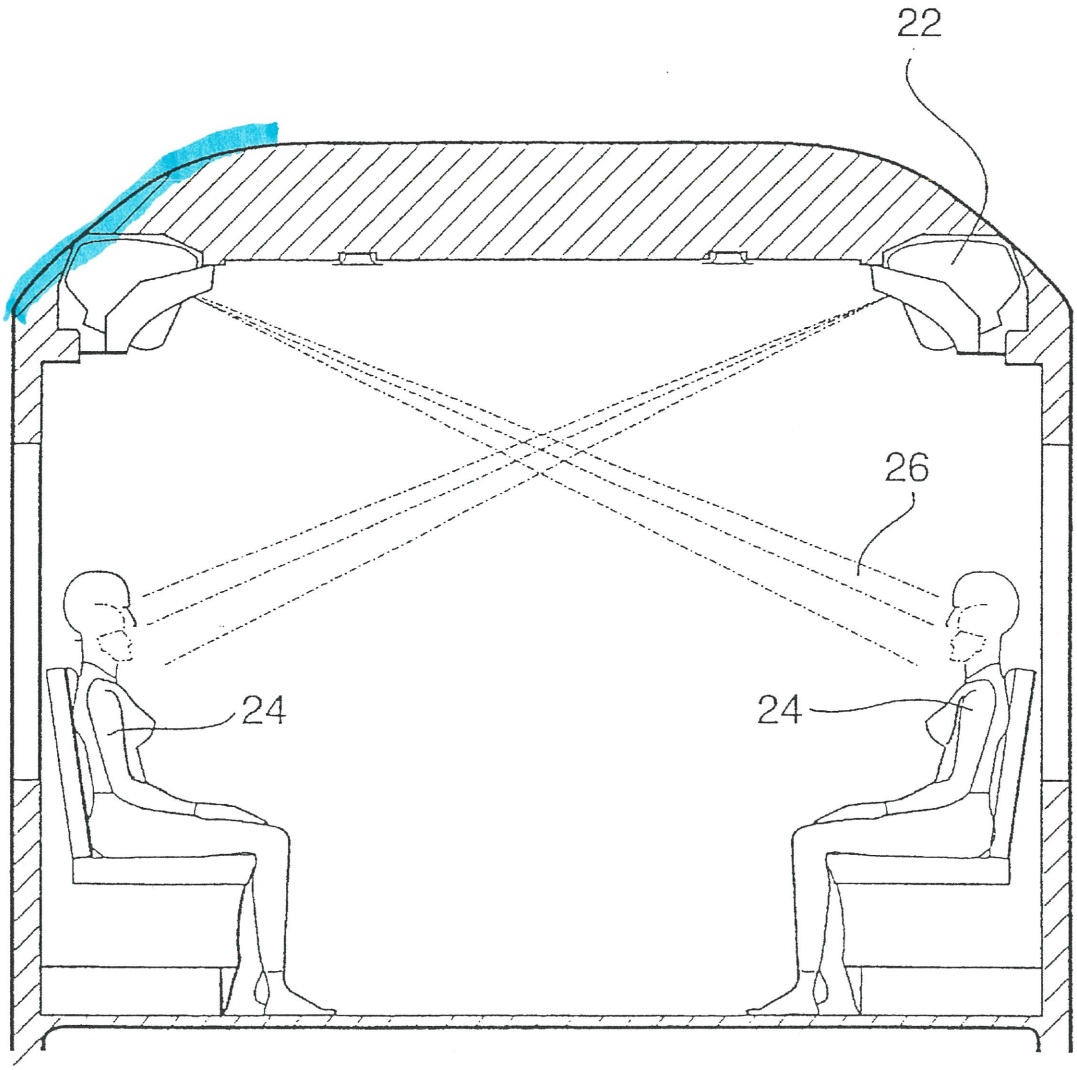

FIG.2

PENGAD 800-631-6989
EXHIBIT
Long 9
10-24-17 AKB

DOCKET ALARM
Find authenticated court documents without watermarks at docketalarm.com.