US005081454A

United States Patent [19]

Campbell, Jr. et al.

[11] Patent Number: 5,081,454

[45] Date of Patent: Jan. 14, 1992

[54] AUTOMATIC A/D CONVERTER OPERATION USING PROGRAMMABLE SAMPLE TIME

[75] Inventors: Jules D. Campbell, Jr.; William D. Huston; Mark R. Heene, all of Austin, Tex.

[73] Assignee: Motorola, Inc., Schaumburg, Ill.

[21] Appl. No.: 577,222

[22] Filed: Sep. 4, 1990

[51] Int. Cl.[5] H03M 1/12

[52] U.S. Cl. 341/141; 341/155

[58] Field of Search 341/122, 141, 155

[56] References Cited

U.S. PATENT DOCUMENTS

3,821,696	6/1974	Harrell	341/141
4,264,898	4/1981	Barman et al.	341/141
4,338,665	7/1982	Aono et al.	341/141
4,381,498	4/1983	Goodale	341/141
4,618,848	10/1986	Parfitt	341/141
4,654,632	3/1987	Yoshida et al.	341/141
4,677,422	6/1987	Naito	341/122
4,933,676	6/1990	Hauge et al.	341/141
4,937,575	6/1990	Kommer	341/118

Primary Examiner—A. D. Pellinen
Assistant Examiner—Marc S. Hoff
Attorney, Agent, or Firm—Walt Nielsen; Jonathan P. Meyer

[57] ABSTRACT

An analog-to-digital conversion system module and method provides programmable times for sampling analog input signals. Software involvement is minimized by providing a command word which includes information specifying a sample time. The command word may be stored in a register or memory table. The command word or words may specify the conversion time per analog input channel or group of channels, and per conversion or conversion sequence. In one embodiment a control table comprises a plurality of conversion command words (CCW's). Each CCW designates conversion parameters including the input sample time.

27 Claims, 14 Drawing Sheets

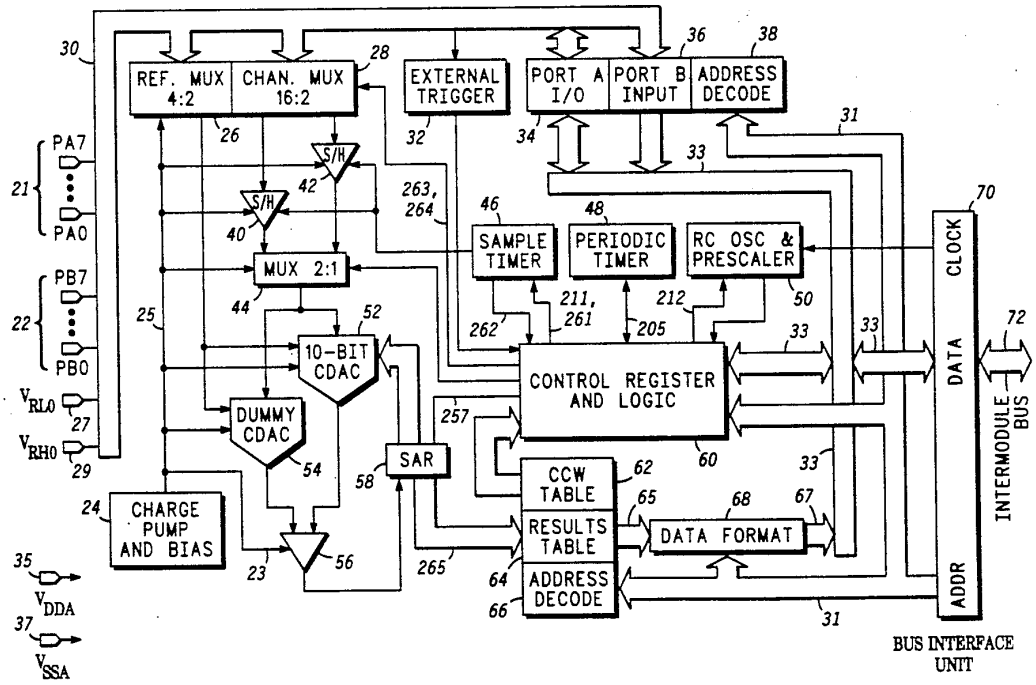

DOCKET ALARM Find authenticated court documents without watermarks at docketalarm.com.

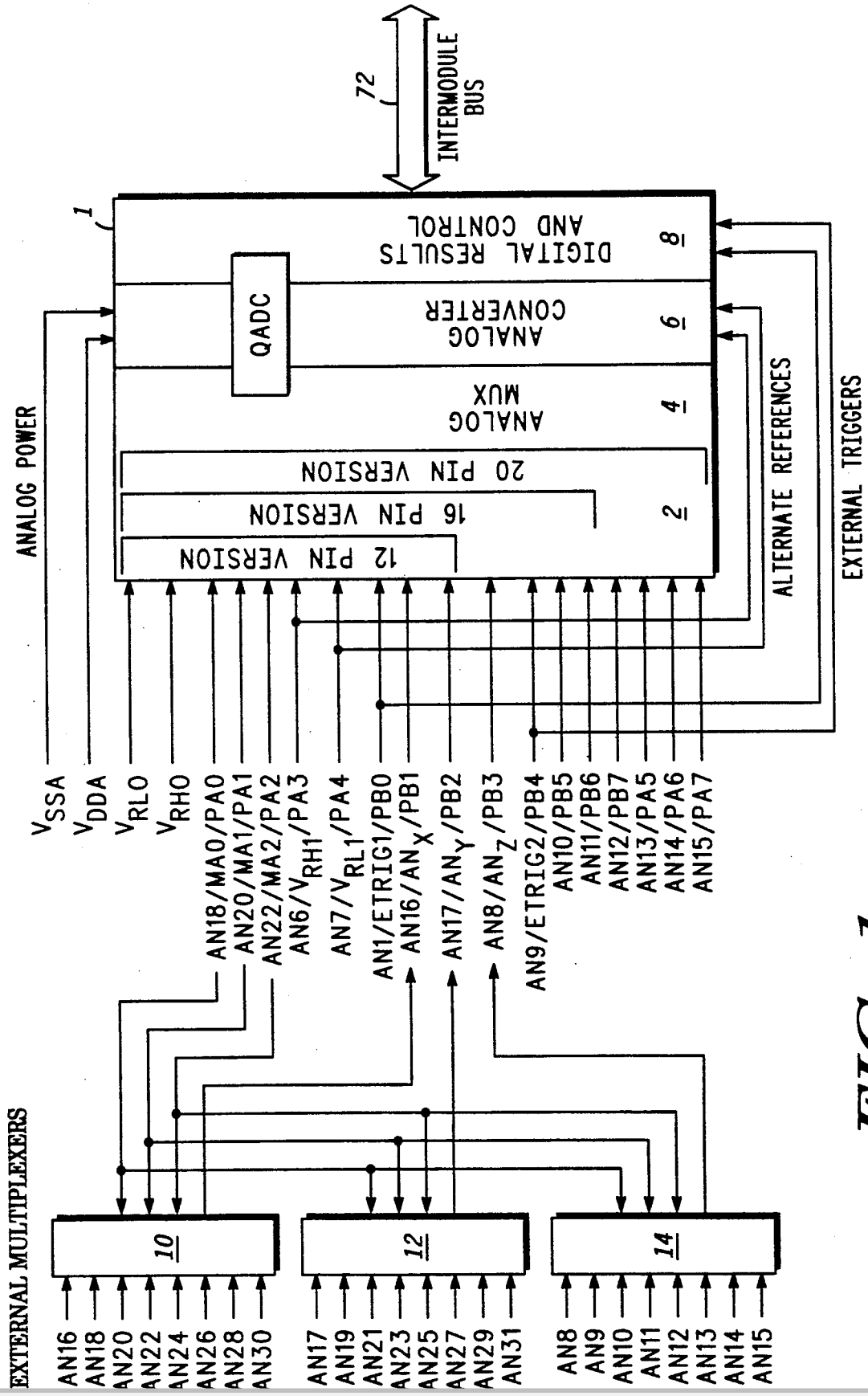

FIG. 1

DOCKET ALARM Find authenticated court documents without watermarks at docketalarm.com.

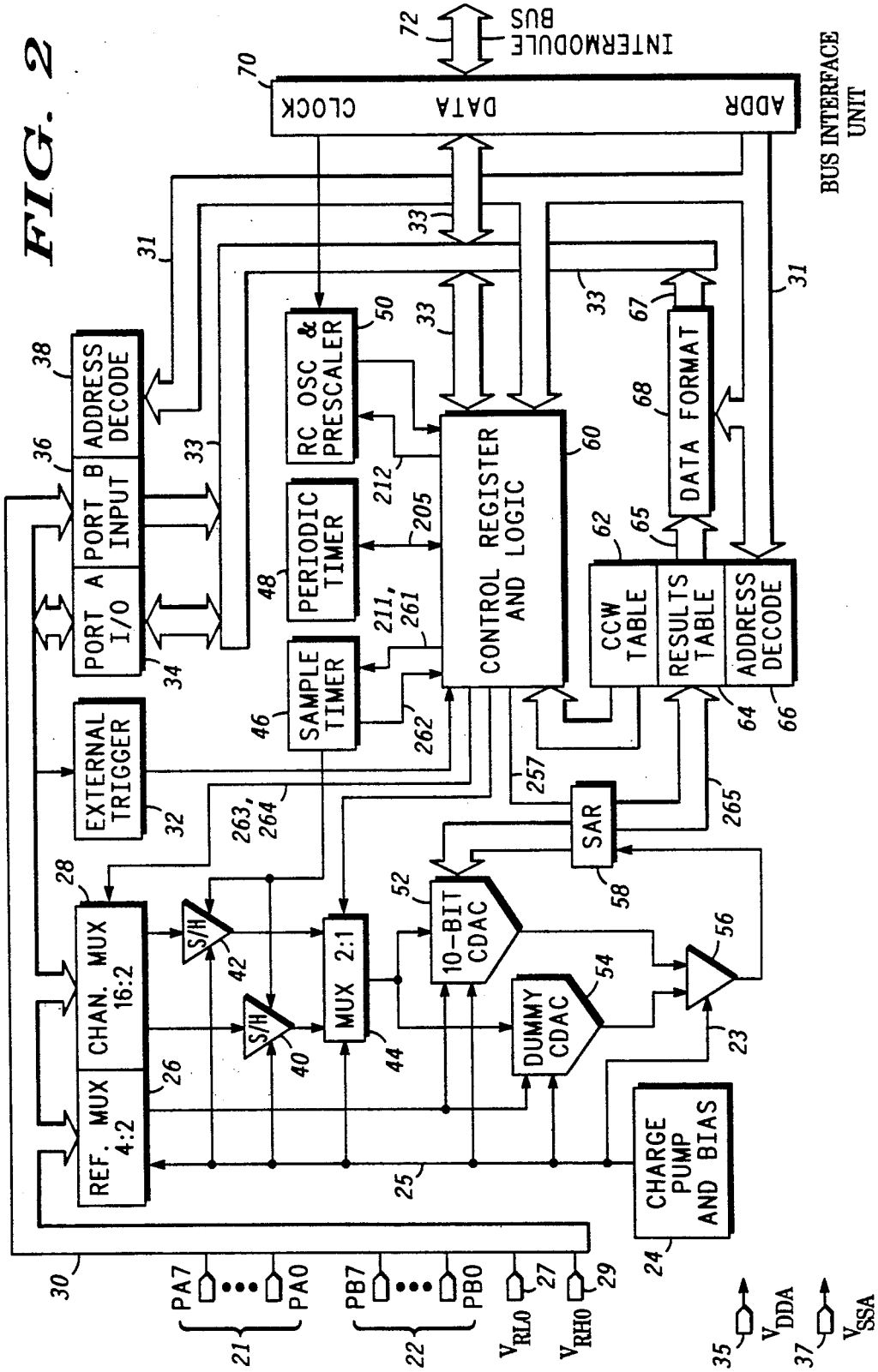

FIG. 2

DOCKET ALARM Find authenticated court documents without watermarks at docketalarm.com.

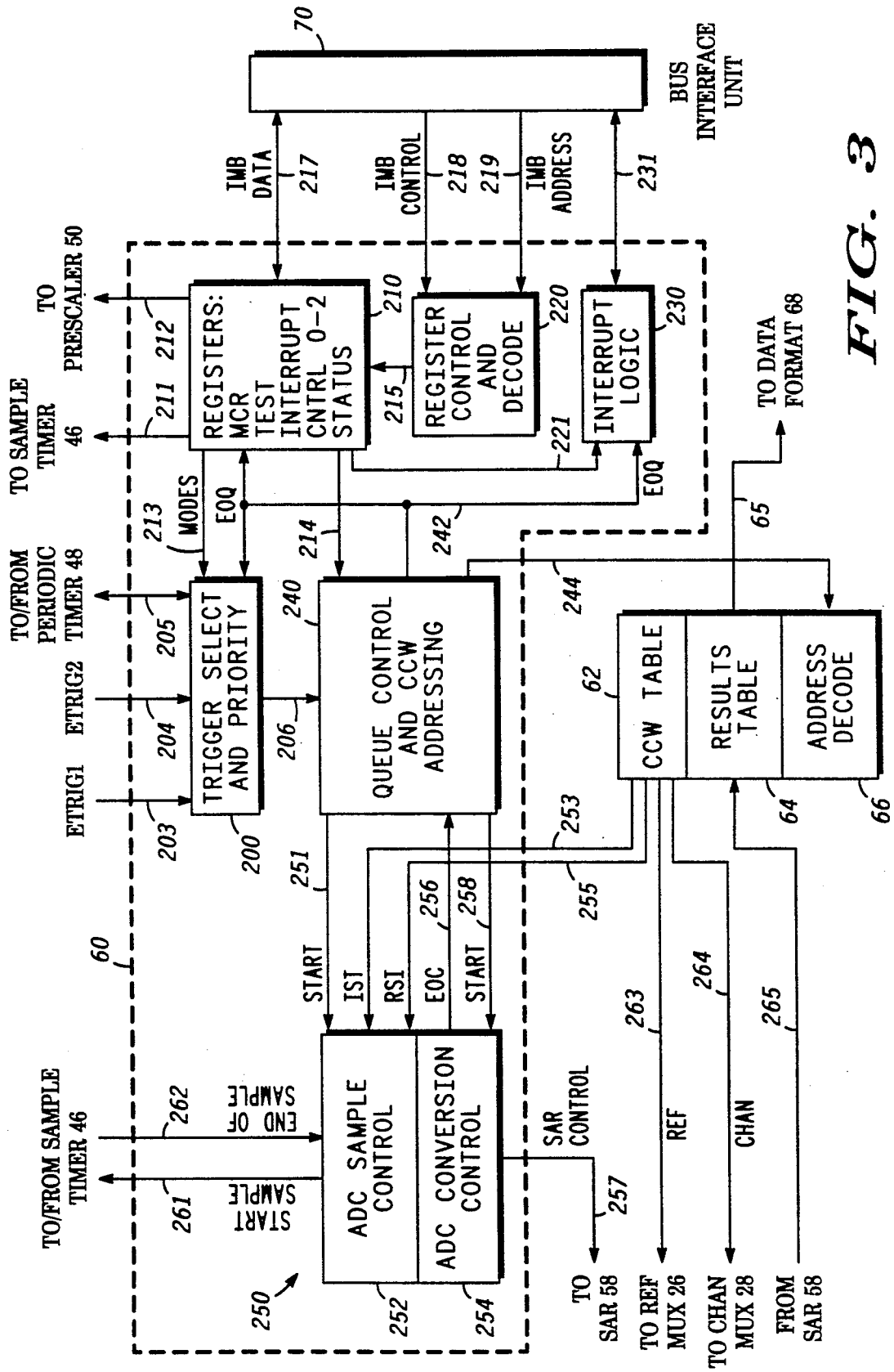

FIG. 3

DOCKET ALARM Find authenticated court documents without watermarks at docketalarm.com.

SIGNAL NAME	MNEMONIC	IMB I/O
SYSTEM CLOCK	ICLOCK	INPUT FROM IMB
MASTER RESET	IMSTRSTB	INPUT FROM IMB
SYSTEM RESET	ISYSRSTB	INPUT FROM IMB
FREEZE	IFREEZEB	INPUT FROM IMB
TEST	ITSTMODB	INPUT FROM IMB
INTERNAL PERIPHERAL SELECT	IIPCSB	INPUT FROM IMB
MODULE MAPPING	IMODMAP	INPUT FROM IMB
FUNCTION CODES	IFC[3:0]	INPUT FROM IMB
CYCLE START	ICYSB	INPUT FROM IMB
WRITE	IWRITEB	INPUT FROM IMB
ADDRESS BUS	IADDR[23:0]	INPUT FROM IMB
ADDRESS STROBE	IASB	INPUT FROM IMB
ADDRESS ACKNOWLEDGE	IAACKB	OUTPUT TO IMB
SIZE	ISIZ[1:0]	INPUT FROM IMB
DATA STROBE	IDSB	INPUT FROM IMB
DATA BUS	IDATA[15:0]	INPUT/OUTPUT FROM/TO IMB
DATA TRANSFER ACKNOWLEDGE	IDTACKB	OUTPUT TO IMB
BUS ERROR	IBERRB	OUTPUT TO IMB
INTERRUPT REQUEST LEVEL	IRQ[7:1]	OUTPUT TO IMB
INTERRUPT ARBITRATION	IARB[1:0]	INPUT/OUTPUT FROM/TO IMB

FIG. 4

FIG. 5

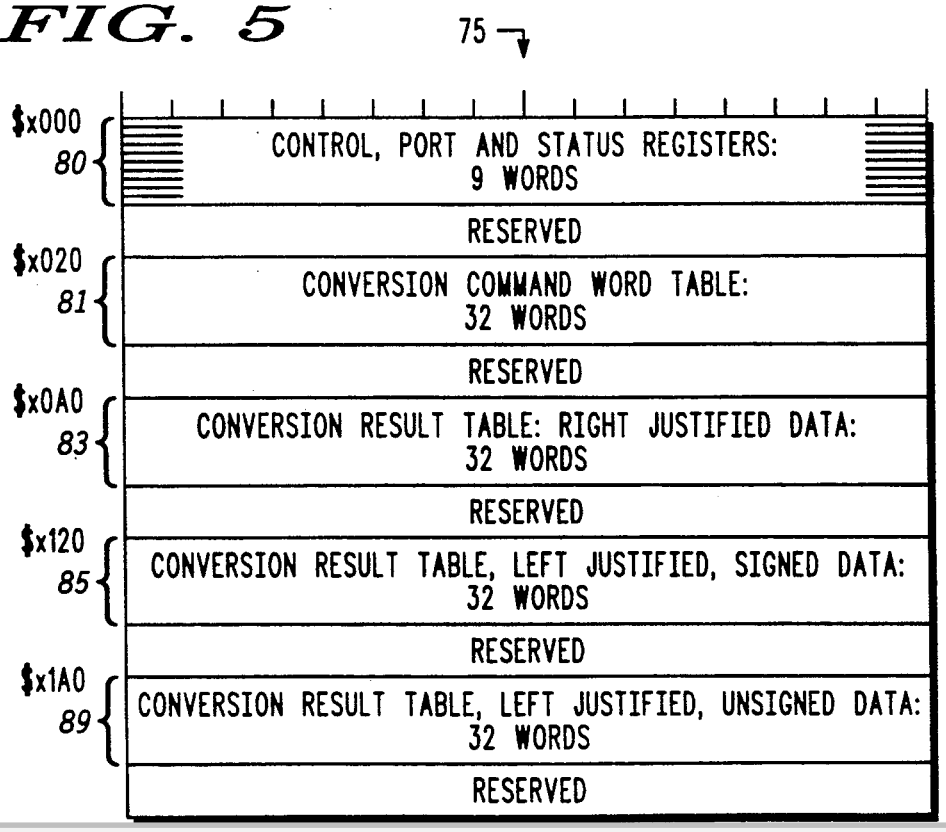

DOCKET ALARM Find authenticated court documents without watermarks at docketalarm.com.

DOCKET ALARM

Explore Litigation Insights

Docket Alarm provides insights to develop a more informed litigation strategy and the peace of mind of knowing you're on top of things.

Real-Time Litigation Alerts

Keep your litigation team up-to-date with **real-time alerts** and advanced team management tools built for the enterprise, all while greatly reducing PACER spend.

Our comprehensive service means we can handle Federal, State, and Administrative courts across the country.

Advanced Docket Research

With over 230 million records, Docket Alarm's cloud-native docket research platform finds what other services can't. Coverage includes Federal, State, plus PTAB, TTAB, ITC and NLRB decisions, all in one place.

Identify arguments that have been successful in the past with full text, pinpoint searching. Link to case law cited within any court document via Fastcase.

Analytics At Your Fingertips

Learn what happened the last time a particular judge, opposing counsel or company faced cases similar to yours.

Advanced out-of-the-box PTAB and TTAB analytics are always at your fingertips.

API

Docket Alarm offers a powerful API (application programming interface) to developers that want to integrate case filings into their apps.

LAW FIRMS

Build custom dashboards for your attorneys and clients with live data direct from the court.

Automate many repetitive legal tasks like conflict checks, document management, and marketing.

FINANCIAL INSTITUTIONS

Litigation and bankruptcy checks for companies and debtors.

E-DISCOVERY AND LEGAL VENDORS

Sync your system to PACER to automate legal marketing.