OIPE
NOV 29 2006
PATENT & TRADEMARK OFFICE
IAP51

(Express Mail Label No.: EB 069229393 US)

IN THE UNITED STATES PATENT AND TRADEMARK OFFICE

Application No.:	10/648,012
Applicant:	WOOLFORK, C. Earl
Filing Date:	08/26/2003
Title:	WIRELESS DIGITAL AUDIO MUSIC SYSTEM
TC/A.U.:	2615
Confirmation No.	3337
Examiner:	FLANDERS, Andrew C.
Docket No.	W003-4000

Mail Stop AF
Commissioner for Patents
Post Office Box 1450
Alexandria, Virginia 22313-1450

AFTER FINAL RESPONSE TO OFFICE ACTION

Dear Sir:

In response to the Final Office Action of October 2, 2006, please amend without prejudice the above-identified patent application as follows:

Amendments to the Claims are reflected in the listing of claims, which begins on page 2 of this paper.

Remarks/Arguments begin on page 29 of this paper.

AMENDMENT TO CLAIMS:

This listing of claims will replace all prior versions, and listings, of claims in the application.

Listing of Claims:

1. (Currently Amended) A wireless digital audio music system for spread spectrum communication of an audio music signal from the analog headphone jack connected to a battery powered spread spectrum transmitter and received by a battery powered spread spectrum headphone receiver comprising:

an analog headphone jack from an analog audio music source in communication with ~~a~~ the battery powered spread spectrum digital transmitter having a transmit antenna;

said battery powered digital transmitter converts an analog audio music signal from said ~~existing~~ analog headphone jack to a digital signal using an analog-to-digital converter (ADC) ~~ADC~~ in communication with an encoder;

said encoder in communication with a channel encoder;

said channel encoder in communication with a digital modulator;

said digital modulator in communication with a spread spectrum communication modulator that utilizes a code generator to create a unique codeword ~~hop pattern~~ for each individual user;

said spread spectrum communication modulator in communication with ~~a~~ the transmit antenna that transmits at a radio frequency of approximately 2.4 GHz for

receipt by a receiving antenna of the battery powered spread spectrum headphone receiver;

said receiving antenna in communication with a spread spectrum communication demodulator;

said spread spectrum communication demodulator in communication with a receiver code generator and with a digital demodulator;

said digital demodulator in communication with a channel decoder;

said channel decoder in communication with a receiver decoder;

said receiver decoder in communication with a digital-to-analog converter (DAC) ~~DAC~~;

said DAC in communication with a low pass filter to pass the analog music signal in the approximate frequency band of 20 Hz to 20 kHz; and

said low pass filter passing the analog music signal which will be amplified for processing to a speaker headphone set to provide high quality music for listening by a single user wearing the ~~headphones.~~ battery powered spread spectrum headphone receiver.

Claims 2 – 3 (canceled).

4. (Currently Amended) A method for battery powered wireless communication transmission and reception of high fidelity audio music between a battery operated digital transmitter and a battery operated digital receiver headphone

comprising the steps of:

connecting the plug attached to said battery operated digital transmitter to the existing analog headphone jack of an audio music source;

converting ~~a~~ an analog music audio signal to a digital communication signal using an analog-to-digital converter (ADC) ~~ADC~~ in communication with an encoder;

encoding the communication signal using channel encoding;

modulating the digital communication signal using a digital modulator;

creating a spread spectrum signal using a code generator to modulate a unique codeword ~~hop pattern~~ for each individual user;

transmitting said spread spectrum signal at a radio frequency of approximately 2.4 GHz;

receiving said spread spectrum signal at said battery operated digital receiver headphones;

demodulating said spread spectrum signal;

demodulating said digital communication signal;

channel decoding of said digital communication signal;

converting said digital communication signal back to said analog music audio signal using a decoder in communication with a digital-to-analog converter (DAC) ~~DAC~~; and

communicating said analog music audio signal to a headphone speaker within the ~~headphone receiver~~ said battery operated digital receiver headphone.

SONY EXHIBIT 1005 – 0504

Claim 5 (canceled).

6. (Currently Amended) An audio music digital wireless transmitter for spread spectrum communication of an audio music signal, comprising:

an analog headphone plug for attachment to an existing analog headphone jack ~~from~~ of an audio music source, said analog headphone plug in communication with a battery powered digital transmitter;

said battery powered digital transmitter being configured to convert an analog audio music signal from said existing analog headphone jack to a digital signal using an analog-to-digital converter (ADC) ~~ADC~~ in communication with an encoder;

said encoder in communication with a channel encoder;

said channel encoder in communication with a digital modulator;

said digital modulator in communication with a spread spectrum communication modulator that utilizes a code generator to create a unique codeword ~~hop pattern~~ for each individual user; and

said spread spectrum communication modulator in communication with a transmit antenna that transmits at a radio frequency of approximately 2.4 GHz for receipt by a receiving antenna.

7. (Currently Amended) An audio music digital wireless headphone receiver for spread spectrum communication of an audio music signal, comprising:

a receiving antenna in communication with a spread spectrum communication

demodulator;

said spread spectrum communication demodulator in communication with a code generator configured to create a unique codeword ~~hop pattern~~ for each individual user;

said digital demodulator in communication with a channel decoder;

said channel decoder in communication with a decoder;

said decoder in communication with a digital-to-analog converter (DAC) ~~DAC~~ to create an analog music signal;

said DAC in communication with a low pass filter to pass the analog music signal in the approximate frequency band of 20 Hz to 20kHz; and

said low pass filter passing the analog music signal which will be amplified for processing to a speaker headphone set to provide high quality music for listening by a single user wearing the ~~headphones~~ headphone receiver.

Claims 8 - 9 (canceled).

10. (Currently Amended) A wireless digital audio music system for spread spectrum communication of an audio music signal from the analog headphone jack connected to a battery powered spread spectrum transmitter and received by a battery powered spread spectrum headphone receiver comprising:

an existing analog headphone jack from an audio music source in communication with ~~a~~ the battery powered spread spectrum digital transmitter having a transmit antenna;

said battery powered spread spectrum digital transmitter converts an analog

SONY EXHIBIT 1005 – 0506

audio music signal from said existing analog headphone jack to a digital signal using an analog-to-digital converter (ADC) ~~ADC~~ in communication with an encoder;

said encoder in communication with a channel encoder that is configured to send encoded symbols that are compatible with a Viterbi decoder;

said channel encoder in communication with a digital modulator;

said digital modulator in communication with a spread spectrum communication modulator that utilizes a code generator to create a unique codeword ~~hop pattern~~ for each individual user;

said spread spectrum communication modulator in communication with ~~a~~ the transmit antenna that transmits at a radio frequency of approximately 2.4 GHz for receipt by a receiving antenna coupled to said battery powered spread spectrum headphone receiver;

said receiving antenna in communication with a spread spectrum communication demodulator;

said spread spectrum communication demodulator in communication with a receiver code generator and with a digital demodulator;

said digital demodulator in communication with a Viterbi decoder;

said Viterbi decoder in communication with a receiver decoder;

said receiver decoder in communication with a digital-to-analog converter (DAC) ~~DAC~~;

said DAC in communication with a low pass filter to pass the analog music signal in the approximate frequency band of 20 Hz to 20 kHz; and

said low pass filter passing the analog music signal which will be amplified for processing to a speaker headphone set to provide high quality music for listening by a single user wearing the ~~headphones~~ said battery powered spread spectrum headphone receiver.

11. (Currently Amended) An audio music digital wireless receiver for spread spectrum communication of an audio music signal to be received by a battery powered spread spectrum headphone receiver comprising:

a receiving antenna in communication with a spread spectrum communication demodulator;

said spread spectrum communication demodulator in communication with a code generator configured to create a unique codeword ~~hop pattern~~ for each individual user;

said digital demodulator in communication with a Viterbi decoder;

said Viterbi decoder in communication with a decoder;

said decoder in communication with a DAC;

said DAC in communication with a low pass filter to pass the analog music signal in the approximate frequency band of 20 Hz to 20kHz; and

said low pass filter passing the analog music signal which will be amplified for processing to a speaker headphone set to provide high quality music for listening by a single user wearing the ~~headphones~~ battery powered spread spectrum headphone receiver.

SONY EXHIBIT 1005 – 0508

12. (Currently Amended). A wireless digital audio music system for spread spectrum communication of an audio music signal from the analog headphone jack connected to a battery powered spread spectrum transmitter and received by a battery powered spread spectrum headphone receiver comprising:

an analog headphone jack from an audio music source in communication with a battery powered digital transmitter having a transmit antenna;

said battery powered digital transmitter converts ~~an~~ the audio music signal from said ~~existing~~ analog headphone jack to a digital signal using an analog-to-digital converter (ADC) ~~ADC~~ in communication with an encoder;

said encoder in communication with a channel encoder;

said channel encoder in communication with a digital modulator;

said digital modulator in communication with a spread spectrum communication modulator that utilizes a code generator to create a unique codeword ~~hop pattern~~ for an individual user;

said spread spectrum communication modulator in communication with ~~a~~ the transmit antenna that transmits at a radio frequency of approximately 2.4 GHz for receipt by a receiving antenna;

said receiving antenna, of said battery powered spread spectrum headphone receiver, in communication with a spread spectrum communication demodulator;

a receiver code generator configured to create ~~a~~ the unique ~~hop pattern~~ codeword for each individual user;

a 2.4 GHz direct conversion receiver that includes a spread spectrum

communication demodulator;

said spread spectrum communication demodulator in communication with said receiver code generator and with a digital demodulator;

said digital demodulator in communication with a channel decoder;

said channel decoder in communication with a receiver decoder;

said receiver decoder in communication with a DAC;

said DAC in communication with a low pass filter to pass the analog music signal in the approximate frequency band of 20 Hz to 20 kHz; and

said low pass filter passing analog music signal which will be amplified for processing to a speaker headphone set to provide high quality music for listening by a single user wearing the ~~headphones~~ battery powered spread spectrum headphone receiver.

13. (Currently Amended) An audio music digital wireless receiver for spread spectrum communication of an audio music signal, comprising:

a receiving antenna in communication with a 2.4 GHz direct conversion receiver, wherein the direct conversion receiver includes a spread spectrum communication demodulator in communication with a code generator, said code generator being configured to create a unique codeword ~~hop pattern~~ for each individual user;

said digital demodulator in communication with a channel decoder;

said channel decoder in communication with a decoder;

said decoder in communication with a digital-to-analog converter (DAC) DAC;

said DAC in communication with a low pass filter to pass the analog music signal in the approximate frequency band of 20 Hz to 20kHz; and

said low pass filter passing the analog music signal which will be amplified for processing to a speaker headphone set to provide high quality music for listening by a single user wearing the ~~headphones~~ wireless receiver.

14. (Currently Amended) A wireless digital audio system, comprising:

at least one audio source;

at least one digital audio transmitter operatively coupled to said at least one audio source;

at least one audio receiver adapted for digital wireless communication with said at least one audio transmitter and utilizing fuzzy logic to optimize digital signal processing, each of said at least one digital audio transmitter and receiver being configured for code division multiple access (CDMA) communication, the at least one receiver processing a CDMA signal having a CDMA communication configuration from the at least one audio transmitter to produce a processed CDMA signal; and

at least one module adapted to audibly reproduce said processed CDMA signal, said CDMA communication configuration providing a user with independent audio reproduction free of interference from other users or wireless devices.

15. (Currently Amended) A wireless digital audio system, comprising:

at least one audio source;

at least one digital audio transmitter operatively coupled to said at least one audio source;

at least one audio receiver adapted for digital wireless communication with said at least one audio transmitter and utilizing fuzzy logic to optimize digital signal processing, each of said at least one digital audio transmitter and receiver being configured for code division multiple access (CDMA) communication, the at least one receiver processing a CDMA signal having a CDMA communication configuration from the at least one audio transmitter to produce a processed CDMA signal;

at least one module adapted to amplify said processed CDMA signal; and

at least one module adapted to audibly reproduce said amplified signal, said CDMA communication configuration providing a user with independent audio reproduction free of interference from other users or wireless devices.

16. (Previously Presented) The wireless digital audio system of Claim 15, wherein said at least one signal amplifying module includes at least one power amplifier, said at least one power amplifier being configured to provide a low distortion audio signal output.

17. (Previously Presented) The wireless digital audio system of Claim 16, wherein said at least one audible reproducing module includes at least one headphone speaker, said at least one headphone speaker receiving said low distortion audio signal

output from said at least one power amplifier.

18. (Previously Presented) The wireless digital audio system of Claim 14, wherein said at least one audible reproducing module includes at least one headphone speaker.

19. (Previously Presented) A wireless digital audio system, comprising:

at least one audio source;

at least one digital audio transmitter operatively coupled to said at least one audio source, said at least one audio transmitter comprising:

a first analog low pass filter receiving audio output from said at least one audio source;

a digital low pass filter;

an analog-to-digital converter (ADC) operatively coupled between said first analog and digital low pass filters;

a first encoder receiving output from said digital low pass filter and being configured to reduce intersymbol interference (ISI);

a second channel encoder operatively coupled to said first encoder and adapted to reduce transmission errors;

a digital modulator operatively coupled to said second channel encoder; and

a differential phase shift key (DPSK) module receiving output from said

digital modulator and being configured for direct sequence spread spectrum (DSSS) communication, said DPSK module transmitting a corresponding DSSS signal;

at least one audio receiver configured for digital wireless communication with said at least one audio transmitter and utilizing embedded fuzzy logic to optimize digital signal processing, said at least one audio receiver comprising:

a band pass filter (BPF) configured to process said transmitted DSSS signal;

a direct conversion module receiving output from said BPF and being configured to capture the correct bit sequence embedded in said processed DSSS signal;

a digital demodulator adapted to process output from said direct conversion module;

a Viterbi decoder operatively coupled to said digital demodulator and generating a corresponding digital output;

a source decoder processing said digital output from said Viterbi decoder and being configured to decode the digital signal encoded by said first encoder;

a second analog low pass filter; and

a digital-to-analog converter (DAC) operatively coupled between said source decoder and said second analog low pass filter, said second analog low pass filter generating an audio output corresponding to the decoded and converted digital signal; and

at least one module adapted to reproduce said generated audio output, said audio output having been wirelessly transmitted from said at least one audio source to a user

without interference from other users or wireless devices.

20. (Previously Presented) The wireless digital audio system of Claim 19, wherein said BPF is a wideband BPF.

21. (Previously Presented) The wireless digital audio system of Claim 19, wherein said modulator is a 64-Ary modulator.

22. (Previously Presented) The wireless digital audio system of Claim 19, wherein said demodulator is a 64-Ary demodulator.

23. (Previously Presented) The wireless digital audio system of Claim 19, wherein said generated audio output is in the approximate range of 20 Hz to 20 kHz.

24. (Currently Amended) The wireless digital audio system of Claim 19, wherein said ~~spread-spectrum~~ transmitted DSSS signal is transmitted at about 2.4 GHz via an omni-directional antenna.

25. (Currently Amended) The wireless digital audio system of Claim 24, wherein said ~~spread-spectrum~~ transmitted DSSS signal is transmitted at a power of about 100 milliwatts or less.

26. (Previously Presented) The wireless digital audio system of Claim 19, wherein said ADC is a 4-bit analog-to-digital converter.

27. (Previously Presented) The wireless digital audio system of Claim 19, wherein said at least one audio source is a portable audio player.

28. (Previously Presented) The wireless digital audio system of Claim 19, wherein said at least one audio reproducing module includes at least one headphone speaker.

29. (Previously Presented)The wireless digital audio system of Claim 19, wherein said BPF is operatively coupled to at least one antenna configured to receive said transmitted DSSS signal.

30. (Previously Presented) A wireless digital audio system, comprising:

at least one audio source;

at least one digital audio transmitter operatively coupled to said at least one audio source, said at least one audio transmitter comprising:

a first analog low pass filter receiving audio output from said at least one audio source;

a digital low pass filter;

an analog-to-digital converter (ADC) operatively coupled between said

first analog and digital low pass filters;

a first encoder receiving output from said digital low pass filter and being configured to reduce intersymbol interference (ISI);

a second channel encoder operatively coupled to said first encoder and adapted to reduce transmission errors;

a digital modulator operatively coupled to said second channel encoder; and

a differential phase shift key (DPSK) module receiving output from said digital modulator and being configured for direct sequence spread spectrum (DSSS) communication, said DPSK module transmitting a corresponding DSSS signal;

at least one audio receiver configured for digital wireless communication with said at least one audio transmitter and utilizing embedded fuzzy logic to optimize digital signal processing, said at least one audio receiver comprising:

a band pass filter (BPF) configured to process said transmitted DSSS signal;

a direct conversion module receiving output from said BPF and being configured to capture the correct bit sequence embedded in said processed DSSS signal;

a digital demodulator adapted to process output from said direct conversion module;

a Viterbi decoder operatively coupled to said digital demodulator and generating a corresponding digital output;

a source decoder processing said digital output from said Viterbi decoder

and being configured to decode the digital signal encoded by said first encoder;

a second analog low pass filter; and

a digital-to-analog converter (DAC) operatively coupled between said source decoder and said second analog low pass filter, said second analog low pass filter generating an audio output corresponding to the decoded and converted digital signal;

at least one module adapted to amplify said generated audio output; and

at least one module adapted to reproduce said amplified audio output, said audio output having been wirelessly transmitted from said at least one audio source to a user without interference from other users or wireless devices.

31. (Previously Presented) The wireless digital audio system of Claim 30, wherein said at least one audio amplifying module includes at least one power amplifier, said at least one power amplifier being configured to provide a low distortion audio signal output.

32. (Previously Presented) The wireless digital audio system of Claim 31, wherein said at least one audio reproducing module includes at least one headphone speaker, said at least one headphone speaker receiving said low distortion audio signal output from said at least one power amplifier.

33. (Previously Presented) A wireless digital audio system, comprising:

at least one audio source;

at least one digital audio transmitter operatively coupled to said at least one audio source;

at least one audio receiver adapted for digital wireless communication with said at least one audio transmitter, each of said at least one digital audio transmitter and receiver being configured for code division multiple access (CDMA) communication; and

at least one module adapted to audibly reproduce said processed CDMA signal, said CDMA communication configuration providing a user with independent audio reproduction free of interference from other users or wireless devices.

34. (Previously Presented) A wireless digital audio system, comprising:

at least one audio source;

at least one digital audio transmitter operatively coupled to said at least one audio source;

at least one audio receiver adapted for digital wireless communication with said at least one audio transmitter, each of said at least one digital audio transmitter and receiver being configured for code division multiple access (CDMA) communication;

at least one module adapted to amplify said processed CDMA signal; and

at least one module adapted to audibly reproduce said amplified signal, said CDMA communication configuration providing a user with independent audio reproduction free of interference from other users or wireless devices.

35. (Previously Presented) The wireless digital audio system of Claim 14, wherein said at least one audio source provides analog output in the approximate range of 20 Hz to 20 kHz.

36. (Previously Presented) The wireless digital audio system of Claim 15, wherein said at least one audio source provides analog output in the approximate range of 20 Hz to 20 kHz.

37. (Previously Presented) The wireless digital audio system of Claim 33, wherein said at least one audio source provides analog output in the approximate range of 20 Hz to 20 kHz.

38. (Previously Presented) The wireless digital audio system of Claim 34, wherein said at least one audio source provides analog output in the approximate range of 20 Hz to 20 kHz.

39. (Previously Presented) The wireless digital audio system of Claim 14, wherein at least one of said digital audio transmitter and receiver is battery-powered.

40. (Previously Presented) The wireless digital audio system of Claim 15, wherein at least one of said digital audio transmitter and receiver is battery-powered.

SONY EXHIBIT 1005 – 0520

41. (Previously Presented) The wireless digital audio system of Claim 33, wherein at least one of said digital audio transmitter and receiver is battery-powered.

42. (Previously Presented) The wireless digital audio system of Claim 34, wherein at least one of said digital audio transmitter and receiver is battery-powered.

43. (Previously Presented) A wireless digital audio system, comprising:

at least one audio source;

at least one digital audio transmitter operatively coupled to said at least one audio source, said at least one audio transmitter comprising:

a first analog low pass filter receiving audio output from said at least one audio source;

a digital low pass filter;

an analog-to-digital converter (ADC) operatively coupled between said first analog and digital low pass filters;

a first encoder receiving output from said digital low pass filter and being configured to reduce intersymbol interference (ISI);

a second channel encoder operatively coupled to said first encoder and adapted to reduce transmission errors;

a digital modulator operatively coupled to said second channel encoder; and

a differential phase shift key (DPSK) module receiving output from said digital modulator and being configured for direct sequence spread spectrum (DSSS) communication, said DPSK module transmitting a corresponding DSSS signal;

at least one audio receiver configured for digital wireless communication with said at least one audio transmitter, said at least one audio receiver comprising:

a band pass filter (BPF) configured to process said transmitted DSSS signal;

a direct conversion module receiving output from said BPF and being configured to capture the correct bit sequence embedded in said processed DSSS signal;

a digital demodulator adapted to process output from said direct conversion module;

a Viterbi decoder operatively coupled to said digital demodulator and generating a corresponding digital output;

a source decoder processing said digital output from said Viterbi decoder and being configured to decode the digital signal encoded by said first encoder;

a second analog low pass filter; and

a digital-to-analog converter (DAC) operatively coupled between said source decoder and said second analog low pass filter, said second analog low pass filter generating an audio output corresponding to the decoded and converted digital signal; and

at least one module adapted to reproduce said generated audio output, said audio output having been wirelessly transmitted from said at least one audio source to a user

without interference from other users or wireless devices.

44. (Previously Presented) A wireless digital audio system, comprising:

at least one audio source;

at least one digital audio transmitter operatively coupled to said at least one audio source, said at least one audio transmitter comprising:

a first analog low pass filter receiving audio output from said at least one audio source;

a digital low pass filter;

an analog-to-digital converter (ADC) operatively coupled between said first analog and digital low pass filters;

a first encoder receiving output from said digital low pass filter and being configured to reduce intersymbol interference (ISI);

a second channel encoder operatively coupled to said first encoder and adapted to reduce transmission errors;

a digital modulator operatively coupled to said second channel encoder; and

a differential phase shift key (DPSK) module receiving output from said digital modulator and being configured for direct sequence spread spectrum (DSSS) communication, said DPSK module transmitting a corresponding DSSS signal;

at least one audio receiver configured for digital wireless communication with said at least one audio transmitter, said at least one audio receiver comprising:

a band pass filter (BPF) configured to process said transmitted DSSS signal;

a direct conversion module receiving output from said BPF and being configured to capture the correct bit sequence embedded in said processed DSSS signal;

a digital demodulator adapted to process output from said direct conversion module;

a Viterbi decoder operatively coupled to said digital demodulator and generating a corresponding digital output;

a source decoder processing said digital output from said Viterbi decoder and being configured to decode the digital signal encoded by said first encoder;

a second analog low pass filter; and

a digital-to-analog converter (DAC) operatively coupled between said source decoder and said second analog low pass filter, said second analog low pass filter generating an audio output corresponding to the decoded and converted digital signal;

at least one module adapted to amplify said generated audio output; and

at least one module adapted to reproduce said amplified audio output, said audio output having been wirelessly transmitted from said at least one audio source to a user without interference from other users or wireless devices.

45. (Previously Presented) The wireless digital audio system of Claim 43, wherein said at least one audio source provides analog output in the approximate range

of 20 Hz to 20 kHz.

46. (Previously Presented) The wireless digital audio system of Claim 44, wherein said at least one audio source provides analog output in the approximate range of 20 Hz to 20 kHz.

47. (Previously Presented) The wireless digital audio system of Claim 43, wherein at least one of said digital audio transmitter and receiver is battery-powered.

48. (Previously Presented) The wireless digital audio system of Claim 44, wherein at least one of said digital audio transmitter and receiver is battery-powered.

49. (Previously Presented) The wireless digital audio system of Claim 43, wherein said at least one audio source is a portable music player.

50. (Previously Presented) The wireless digital audio system of Claim 44, wherein said at least one audio source is a portable music player.

51. (Previously Presented) A wireless digital audio transmitter, comprising:

a first analog low pass filter receiving audio output from at least one audio source;

a digital low pass filter;

SONY EXHIBIT 1005 – 0525

an analog-to-digital converter (ADC) operatively coupled between said first analog and digital low pass filters;

a first encoder receiving output from said digital low pass filter and being configured to reduce intersymbol interference (ISI);

a second channel encoder operatively coupled to said first encoder and adapted to reduce transmission errors;

a digital modulator operatively coupled to said second channel encoder; and

a differential phase shift key (DPSK) module receiving output from said digital modulator and being configured for direct sequence spread spectrum (DSSS) communication, said DPSK module transmitting a corresponding DSSS signal.

52. (Previously Presented) A wireless digital audio receiver, comprising:

a band pass filter (BPF) configured to process a transmitted DSSS signal;

a direct conversion module receiving output from said BPF and being configured to capture the correct bit sequence embedded in said processed DSSS signal;

a digital demodulator adapted to process output from said direct conversion module;

a Viterbi decoder operatively coupled to said digital demodulator and generating a corresponding digital output;

a source decoder receiving said digital output from said Viterbi decoder and being configured to decode the digital signal encoded therein;

a second analog low pass filter; and

a digital-to-analog converter (DAC) operatively coupled between said source decoder and said second analog low pass filter, said second analog low pass filter generating an audio output corresponding to the decoded and converted digital signal, said audio output having been wirelessly transmitted to a user without interference from other users or wireless devices.

53. (Previously Presented) A wireless digital audio receiver utilizing embedded fuzzy logic to optimize digital signal processing, comprising:

a band pass filter (BPF) configured to process a transmitted DSSS signal;

a direct conversion module receiving output from said BPF and being configured to capture the correct bit sequence embedded in said processed DSSS signal;

a digital demodulator adapted to process output from said direct conversion module;

a Viterbi decoder operatively coupled to said digital demodulator and generating a corresponding digital output;

a source decoder receiving said digital output from said Viterbi decoder and being configured to decode the digital signal encoded therein;

a second analog low pass filter; and

a digital-to-analog converter (DAC) operatively coupled between said source decoder and said second analog low pass filter, said second analog low pass filter generating an audio output corresponding to the decoded and

converted digital signal, said audio output having been wirelessly transmitted to a user without interference from other users or wireless devices.

SONY EXHIBIT 1005 – 0528

REMARKS/ARGUMENTS

Applicant has reviewed the Office Action of October 2, 2006 and made amendments to the claims, as indicated hereinabove, to overcome the Examiner's objections and place the application in condition for allowance. No new matter has been added.

RESPONSE TO AFFIDAVITS:

Examiner indicates that the Declaration filed by the Applicant on August 15, 2006, regarding the limited battery life under 37 CFR 1.132, is insufficient to overcome the rejection of the claims based upon the combination of Altstatt (U.S. Patent 5,771,441) in view of Schotz et al (U.S. Patent 5,946,343). Since the Examiner indicated that some of the documents and data sheets were unreadable, a complete copy of the Declaration ("Declaration") with Exhibits is forwarded once again, as EXHIBIT - I. Applicant apologizes to the Examiner for any inconvenience this may have caused.

Applicant respectfully requests the Examiner to reconsider his position that the Altstatt and Schotz's combination is operative. As pointed out by the Applicant in the Declaration, Altstatt's invention is based on an analog technology and is operated by a battery. (Para. 6 of Declaration). Schotz's invention is based on digital technology. (Para. 7 of Declaration). Applicant further stated that Altstatt cannot be combined with Schotz. (Para. 9 of Declaration). The calculations provided by the Applicant were basically hypothetical calculations, since Applicant asserted that Altstatt cannot be

combined with Schotz. So the Applicant's use 50 mA-h has no significance and none should be attached to since the calculations were hypothetical. Applicant believes that calculations by themselves provide no meaning since Altstatt cannot be combined with Schotz. Additionally, these calculations were incomplete since some of the data sheets were unavailable, as indicated by the Applicant.

Furthermore, Applicant's previously filed amendment dated March 14, 2006, which explains in further detail as to why the combination of Altstatt and Schotz would not provide a reasonable expectation of success, is incorporated in its entirety by reference. Applicant explained that:

> "The office action provides that the combination of Alstatt and Schotz's '343 Patent teaches a battery powered digital transmitter. Applicant respectfully submits that a *prima facie* case of obviousness has not been made. More particularly, the combination of the battery-powered analog transmitter of Alstatt and the wall-powered digital transmitter of Schotz '343 would render Alstatt unsatisfactory for its intended purpose. Alstatt would suffer from a significantly reduced play time due to the power consumption of Schotz's numerous integrated circuits. Moreover, the Alstatt headphones for his portable device would be rendered too large because of the size of the integrated circuits used in Schotz.
>
> For the same reasons of reduced play time and unwieldy headphones, the combination of Alstatt and Schotz would not provide a reasonable expectation of success. Accordingly, Applicant respectfully submits that a *prima facie* case of obviousness has not been made in this respect as well." (Page 15-16 of Amendment dated March 15, 2006).

Based on the foregoing, Applicant respectfully asserts that Alstatt and Schotz cannot be combined and even if such a combination is theoretically possible, such a combination would not provide a reasonable expectation of success.

Examiner further indicates that the second declaration ("Second Declaration") filed by the Applicant on August 15, 2006, regarding FSK and FHSS under 37 CFR 1.132, is insufficient to overcome the rejection of the new matter (See Exhibit 5 to

SONY EXHIBIT 1005 – 0530

August 15, 2006 Response). The Examiner indicates that the CDMA overview provided by www.telecomspace.com discloses three ways to spread the bandwidth of a signal in CDMA. The three ways to spread the bandwidth of the signal, discussed on the website, are as follows:

1) Frequency hopping (FHSS). The signal is rapidly switched between different frequencies within the hopping bandwidth pseudo-randomly, and the receiver knows before hand where to find the signal at any given time.

2) Time hopping (THSS). The signal is transmitted in short bursts pseudo-randomly, and the receiver knows beforehand when to expect the burst.

3) Direct sequence (DHSS). The digital data is directly coded at a much higher frequency. The code is generated pseudo-randomly, the receiver knows how to generate the same code, and correlates the received signal with that code to extract the data.

Examiner asserts that the Applicant discussed the two ways to spread the bandwidth (i.e. FHSS & DHSS) in the Second Declaration and since the website discusses three, FHSS and DHSS are not inherent features of CDMA. Please note that the same website indicates that the CDMA was commercially introduced in 1995, became one of the world's fastest-growing wireless technologies, and it is a form of Direct Sequence Spread Spectrum communication. Applicant is not claiming that he invented FHSS, THSS, or DSSS. Applicant simply relied on a book entitled "Spread Spectrum Systems with Commercial Applications" by a well known author Robert C. Dixon's ("Dixon"), and the Applicant provided excerpts of some relevant pages to the Examiner to clarify the issue. The fact that the website indicated by the Examiner discusses three approaches to spread the bandwidth of the signal versus the two approaches pointed out by Dixon is irrelevant, and even if relevant, the discrepancy by

two known sources can be properly explained. For example, on page 47, Dixon explains that "Simple time-hopping modulation offers little in the way of interference rejection because a continuous carrier at the signal center frequency can block communications effectively." And, this may be the reason why Dixon has not elaborated on THSS. A copy of the relevant page(s) from Dixon is attached hereto as EXHIBIT - II.

The Examiner points out the requirements set forth in MPEP Section 2112, which are related to rejections based on inherency. The Applicant respectfully submits that the arguments presented by the Examiner with reference to inherency appear to be out of context. The Federal Circuit in *Kennecott Corp. v. Kyocera Intern., Inc.*, 835 F.2d 1419,1422 (Fed.Cir.1987) held that the doctrine of inherency provides that "[b]y disclosing in a patent application a device that inherently performs a function, ..., a patent applicant necessarily discloses that function ... *even though they say nothing concerning it*." (emphasis added). To rely on this doctrine, the patentee must show that "the missing feature is necessarily present, and that it would be so recognized by persons of ordinary skill in the relevant art." *Telemac Cellular Corp. v. Topp Telecom, Inc.*, 247 F.3d 1316, 1328 (Fed.Cir.2001). The same court further explained that to apply the doctrine of inherency, the party relying on the doctrine must prove that the challenged circumstance "inevitably occurs when the process steps ... are followed," *Kooi v. DeWitt*, 546 F.2d 403, 409 (Cust. & Pat.App.1976), or are "inevitable." *Application of Wilding*, 535 F.2d 631, 636 (Cust. & Pat.App.1976); see also *Kropa v. Robie*, 38 C.C.P.A. 858, 187 F.2d 150, 154-55 (Cust. & Pat.App.1951) ("Inherency

SONY EXHIBIT 1005 – 0532

does not mean that a thing might happen one out of twenty times.... It must inevitably happen for the doctrine to apply."). In sum, the doctrine of inherency is satisfied where the patent "inherently discloses the invention ... so that one skilled in the art could produce the results claimed in the [patent] simply by practicing the [patent], i.e., the result flows naturally from the express disclosures" of the patent. *Rosco, Inc. v. Mirror Lite Co.*, 139 F.Supp.2d 287 (E.D.N.Y.2001).

As stated above, *www.telecomspace.com* website indicates that the CDMA was commercially introduced in 1995, became one of the world's fastest-growing wireless technologies, and it is a form of Direct Sequence Spread Spectrum communications. The Applicant has disclosed CDMA and explained how his invention works utilizing a unique codeword that spreads the signal spectrum. Paragraph 0014 of the parent application states that: "Modulation of the digital signal may be performed using *direct sequence spread spectrum communication technology*. A 64-Ary modulator 42 may be used for summation at summation element 46 with a transmitter code generator 44 signal to produce a high symbol rate, and a *unique codeword* that spreads the signal spectrum." (emphasis added). Paragraph 0016 of the parent application states that "This code division multiple access (CDMA) may be used to provide each user independent operation."

Based on the prosecution history, it is abundantly clear that the Applicant has disclosed the use of the CDMA technology to provide each user independent operation. The three ways to spread the bandwidth of the signal, as explained on the website, is simply a method to spread the bandwidth of the signal generated under CDMA. These

methods are sub-sets of CDMA protocol. When the Applicant disclosed CDMA and explained how his invention works utilizing a unique codeword that spreads the signal spectrum, the Applicant, in essence, has disclosed all the three ways (i.e. FHSS, THSS, and DSSS) that would be so recognized by persons of ordinary skill in the relevant art. If Applicant's invention utilizes CDMA protocol, as expressly disclosed in paragraph 0016 of the parent application, it is also apparent to one skilled in the art that there are only three ways to spread the bandwidth of a signal under the CDMA (i.e. FHSS, THSS, and DSSS) and therefore these three ways are inherent features of the CDMA protocol. Without these methods for spreading bandwidth, CDMA protocol cannot be implemented and therefore these result (i.e. methods to spread the bandwidth) flow naturally from the express disclosures of the patent application (i.e. ". . . (CDMA) may be used to provide each user independent operation." Paragraph 0016 of the parent application).

Based on the above, Applicant respectfully requests that the Examiner withdraws his objection to the Second Declaration and also his rejection relating to the new matter.

RESPONSE TO NEW MATTER REJECTIONS:

As noted by the Examiner, the specification is directed to a unique codeword for each individual user (paras. 0014 and 0016 of the parent application). As explained in the response to the Office Action dated August 15, 2006, Applicant believes that the "unique hop pattern" is not a new matter since it is part of CDMA. Applicant's

SONY EXHIBIT 1005 – 0534

previously filed amendment dated March 14, 2006, which explains in further detail as to how unique hope pattern is created for each individual user, is incorporated in its entirety by reference. Nonetheless, in the interest of moving forward with the prosecution, Applicant has amended Claims 1, 4, 6, 7 and 10-13 without prejudice to replace the phrase "unique hope pattern" with "unique codeword."

On page 6 of the Office Action, the Examiner alleges that the terms and techniques disclosed in "A frequency shift keying (FSK) modulation/detection technique could be used given a frequency hopping spread spectrum (FHSS) system choice" sentence (FSK and FHSS) were not present in the parent disclosure or in the current application's disclosure and thus are new matter.

Applicant respectfully requests the Examiner to withdraw his objection to the new matter based on the arguments presented above under the *RESPONSE TO AFFIDAVITS* section. Applicant has discussed a 64-Ary modulation and demodulation techniques in paragraphs 0014 and 0017, respectively, in the parent application. These techniques can be used with a code division multiple access (CDMA) configuration. The parent application, paragraph 0016, specifically references that the code division multiple access (CDMA) may be used to provide each user independent operation. It is known in the art that CDMA covers FHSS (as well as direct sequence spread spectrum (DSSS) and time hopping spread spectrum (THSS)). Additionally, a 64-Ary modulation/detection technique broadly covers all types of modulation/detections of this type, *including* 64-Ary frequency shift keying (FSK). Applicant further attaches an article from the University of Birmingham, 3rd Month Report on the Optical CDMA

SONY EXHIBIT 1005 – 0535

Networks ("Report"), as EXHIBIT - III, to clarify the issue raised by the Examiner. Pages 3 -5 of this Report provide a brief literature survey and elaborates on the concept of Spread Spectrum Communication, Direct Sequence Spread Spectrum (DSSS) and Frequency Hopping Spread Spectrum (FHSS) including *FSK*.

Based on the explanation set forth above, Applicant respectfully requests that the new matter rejection pertaining to "A frequency shift keying (FSK) modulation/detection technique could be used given a frequency hopping spread spectrum (FHSS) system choice" sentence be withdrawn.

Claim Rejections Under 35 U.S.C. §112

The rejection of Claims 1, 4, 6, 10, 12 and 13 under 35 U.S.C. §112, first paragraph, as failing to comply with the written description requirement, is respectfully traversed.

As discussed above, in the interest of moving forward with the prosecution, Applicant has amended Claims 1, 4, 6, 10, 12 and 13 without prejudice to replace the phrase "unique hop pattern" with "unique codeword." Furthermore, Claims 7 and 11 have been similarly amended.

Based on the above, Applicant respectfully submits that amended Claims 1, 4, 6, 10 and 13 comply with the written description requirement of 35 U.S.C. §112, first paragraph and therefore respectfully requests that the 35 U.S.C. §112 rejection of Claims 1, 4, 6, 10, 12 and 13 be withdrawn.

SONY EXHIBIT 1005 – 0536

The rejection of Claims 19-32, 43-53 under 35 U.S.C. §112, first paragraph, as failing to comply with the written description requirement, is respectfully traversed.

Examiner alleges that the Claims contain the limitations directed to DSSS, which is not in the original specification nor inherent as alleged by Applicant. The Applicant has disclosed CDMA and explained how his invention works utilizing a unique codeword that spreads the signal spectrum. Paragraph 0014 of the parent application states that: "Modulation of the digital signal may be performed using *direct sequence spread spectrum* communication technology." The *direct sequence spread spectrum* refers to DSSS. (emphasis added).

Based on the above, Applicant respectfully submits that Claims 19-32, 43-53, are definite and comply with the written description requirement and therefore respectfully requests that the 35 U.S.C. §112 rejection of Claims 19-32, 43-53 be withdrawn.

In view of the above remarks, since Claims 19-32, 43-53 are not rejected under any cited references, Claims 19-32 and 43-53 are allowable.

The rejection of Claims 14 and 15 under 35 U.S.C. §112, second paragraph, is respectfully traversed.

Applicant has amended Claims 14 and 15 to correct the antecedent basis. Based on this, Applicant respectfully submits that amended Claims 14 and 15 comply with the requirement of 35 U.S.C. §112, second paragraph, and therefore respectfully requests that the 35 U.S.C. §112 rejection of Claims 14 and 15 be withdrawn.

SONY EXHIBIT 1005 – 0537

In view of the foregoing amendments and remarks, Applicant respectfully requests withdrawal of the §112 claim rejections.

Claim Rejections Under 35 U.S.C. §102

The rejection of Claims 33 and 34 under 35 U.S.C. §102(e) as being anticipated by Lindemann (U.S. Patent Application 2004/0223622) is respectfully traversed.

Claim 33 recites

> *...at least one module adapted to audibly reproduce said processed CDMA signal, said CDMA communication configuration providing a user with independent* ***audio reproduction free of interference*** *from other users or wireless devices.* (Emphasis added)

The above emphasized claim language is not taught or suggested by Lindemann. Lindemann does not address reproduction that is interference free. Furthermore, Applicant observes that Lindemann does not mention interference or address the problem identified by Applicant and thus Applicant's solution to provide *a user with independent audio reproduction free of interference from other users or wireless devices*. Instead, Lindemann is directed to digital wireless loudspeaker system and the delivery of signals to the speakers. Thus, Lindemann is not directed to a system capable of (1) providing a user with *independent audio reproduction;* and (2) *reproduction free of interference from other users or wireless devices*.

Claim 34 contains similar language. Thus, the remarks set forth above in relation to Claim 33 equally apply to Claim 34.

SONY EXHIBIT 1005 – 0538

Accordingly, Lindemann cannot anticipate Applicant's Claims 33 and 34. For at least this reason, Applicant respectfully requests withdrawal of the rejection of Claims 33 and 34 by Lindemann under 35 U.S.C. §102(e).

Dependent Claims 37 and 41 depend directly or indirectly from independent Claim 33. Furthermore, dependent Claims 38 and 42 depend from independent Claim 34. These dependent claims contain all of the limitations of independent Claims 33 or 34, thus, any rejections under 35 U.S.C. §§102 or 103 should be withdrawn by virtue of their dependency from independent Claims 33 or 34.

Claim Rejections Under 35 U.S.C. §103

The rejection of Claims 1, 4, 6, 7 and 10-13 under 35 U.S.C. §103(a) as being unpatentable over Altstatt '441 in view of Schotz '343 and further in view of Schotz '839 and further in view of Rozin '844 is respectively traversed.

As to Claim 1, none of the references cited teach *a battery powered spread spectrum transmitter ... said battery powered digital transmitter converts an analog audio music signal from said analog headphone jack to a digital signal*, as recited in Claim 1.

Thus, any combinations of references when combined cannot produce such *a battery powered spread spectrum transmitter,* as claimed in Claim 1.

With specific reference to Altstatt, among other things, the Examiner acknowledges that Altstatt does not clearly teach or suggest:

> *[A] wireless digital audio music system for spread spectrum communication, said battery powered digital transmitter converts an*

analog audio music signal from said existing analog headphone jack to a digital signal using an ADC in communication with an encoder...

Thus, the Examiner relies on Schotz for a digital transmitter 22. Furthermore, the Examiner relies on analog inputs 30A, 30B of Schotz for analog connection 12 and 18. Schotz '343 illustrates the transmitter receiving a plurality of audio inputs. In Applicant's invention, the transmitter is only coupled to the analog headphone jack. Applicant observes that Schotz '343 does not mention headphones or the use of an existing analog headphone jack or the use of headphones. Thus, neither Altstatt nor Schotz '343 teaches *a battery powered spread spectrum transmitter ... said battery powered digital transmitter converts an analog audio music signal from said analog headphone jack to a digital signal.* In Schotz '343, there is no teaching that the spread spectrum transmitter of Schotz '343 would operate if coupled to *said analog headphone jack* of Altstatt.

The other references Schotz '839 and Rozin '844 were not relied upon for such a teaching. Thus, the combination of Altstatt, Schotz '343, Schotz '839 and Rozin '844 does not teach the claimed invention of independent Claim 1 for at least the reason set forth above.

Additionally, Applicant observes that Schotz '343 uses PN codes which are for the different audio inputs and not individual users. Schotz '343 states that "the spread spectrum data is arrived at by outputting one of four different PN sequences depending upon the input data. This in effect performs the spread of the data." Thus, the PN sequences of Schotz '343 are not associated with individual users. Instead, the PN sequences of Schotz '343 are related to audio input data.

SONY EXHIBIT 1005 – 0540

Schotz '839 does not teach CDMA or spread spectrum. Thus, Schotz '839 cannot provide the deficiencies related to the combination of Altstatt and Schotz' 343.

Claim 1 has been amended to change hop pattern to "codeword". The rejection relied upon Rozin for a hop pattern for individual users. Thus, in view of the amendments, the combination of Altstatt, Schotz '343, Schotz '839 and Rozin also does not provide a unique codeword for individual users.

Thus, the combination of Altstatt, Schotz '343, Schotz '839 and Rozin '844 does not teach the claimed invention of independent Claim 1 for at least this additional reason set forth above.

Claims 4, 6, 10 and 12 contain similar language. Thus, the remarks set forth above in relation to Claim 1 equally apply to Claims 4, 6, 10 and 12.

In view of the amendments and remarks, the rejection of Claims 1, 4, 6 10 and 12 under 35 U.S.C. §103(a) as being unpatentable over Alstatt '441 in view of Schotz '343 and further in view of Schotz '839 and further in view of Rozin '844 should be withdrawn.

Amended Claim 7, now recites *a code generator configured to create a unique codeword for each individual user*. As to the combination under 35 U.S.C. §103 as being unpatentable over Alstatt '441 in view of Schotz '343 and further in view of Schotz '839 and further in view of Rozin '844, none of the reference teach a *code generator configured to create a unique codeword for each individual user ...to provide high quality music for listening by a single user wearing the headphone receiver.*

None of the references teach (1) sending spread spectrum communications to a

headphone receiver; and (2) a unique codeword for each individual user. Therefore, any combination of Alstatt '441 in view of Schotz '343 and further in view of Schotz '839 and further in view of Rozin '844, cannot teach the claimed invention.

Independent Claims 11 and 13 contain similar language as Claim 7. Thus, the remarks set forth above in relation to Claim 7 equally apply.

In view of the amendments and remarks, the rejection of Claims 7, 11 and 13 under 35 U.S.C. §103 as being unpatentable over Alstatt '441 in view of Schotz '343 and further in view of Schotz '839 and further in view of Rozin '844 should be withdrawn.

The rejection of Claims 14-16, 39 and 40 under 35 U.S.C. §103(a) as being unpatentable by Lindemann (U.S. Patent Application 2004/0223622) in view of Benthin (US Patent 5,790,595) is respectfully traversed.

As remarked previously in relation to Claims 33 and 34, Lindemann does not mention interference or address the problem identified by Applicant and thus Applicant's solution to provide *a user with independent audio reproduction free of interference from other users or wireless devices*. Instead, Lindemann is directed to digital wireless loudspeaker system and the delivery of signals to the speakers. Thus, Lindemann is not directed to a system capable of (1) providing a user with *independent audio reproduction;* and (2) *reproduction free of interference from other users or wireless devices*.

The Examiner acknowledges that Lindemann does not teach fuzzy logic and thus relies on Benthin for a soft decisions in a receiver or during demodulation of a signal.

SONY EXHIBIT 1005 – 0542

However, Benthin does not teach the deficiencies set forth above in relation to Lindemann. Thus, the combination of Lindemann in view of Benthin does not teach the claimed invention of Claim 14.

Claim 15 contains similar language. Thus, the remarks set forth above in relation to Claim 14 equally apply to Claim 15.

In view of the above amendments and remarks, the rejection of Claims 14 and 15 under 35 U.S.C. §103(a) as being unpatentable over Lindemann in view of Benthin should be withdrawn for at least the reasons set forth above.

Dependent Claims 16 and 39-40 depend directly or indirectly from independent Claims 14 and 15. These dependent claims contain all of the limitations of independent Claims 14 or 15, thus, any rejections under 35 U.S.C. §103 should be withdrawn by virtue of their dependency from independent Claims 14 or 15.

Additionally, dependent Claims 17, 18, 35 and 36 depend directly or indirectly on independent Claims 15 or 14. These dependent claims contain all of the limitations of independent Claims 15 or 14, thus, any rejections under 35 U.S.C. §103 should be withdrawn by virtue of their dependency from independent Claims 15 or 14.

The rejection of Claims 17 and 18 under 35 U.S.C. §103(a) as being unpatentable by Altstatt '441 in view of Lindemann (U.S. Patent Application 2004/0223622) and further in view of Benthin, et al. (US Patent 5,790,595) is respectfully traversed.

Applicant observes that the rejection of dependent Claims 17 and 18 appears to rely on Altstatt as the primary reference while their corresponding independent claims

SONY EXHIBIT 1005 – 0543

relies on Lindemann as the primary reference. Accordingly, the rejection is ambiguous.

Nevertheless, Altstatt, like Lindemann, does not teach a CDMA communications configuration providing a user with independent audio reproduction free of interference for other users or wireless device. Applicant observes that Benthin is only relied upon for fuzzy logic in a receiver. Hence, none of the references individually or in combination teach Applicant's invention.

In view of the above remarks, the rejection of Claims 17 and 18 under 35 U.S.C. §103(a) as being unpatentable by Altstatt '441 in view of Lindemann (U.S. Patent Application 2004/0223622) and further in view of Benthin, et al. (US Patent 5,790,595) should be withdrawn.

The rejection of Claims 35 and 36 under 35 U.S.C. §103(a) as being unpatentable by Lindemann (U.S. Patent Application 2004/0223622) in view of Benthin (US Patent 5,790,595) and further in view of Schotz '343 is respectfully traversed.

Schotz '343 is relied upon for a teaching of an analog output of 20 Hz to 20 KHz. However, Schotz '343 does not teach the deficiencies of Lindemann or the combination of Lindemann as modified by Benthin. Hence, the combination of Lindemann as modified by Benthin and Schotz '343 does not teach all the limitations of the base Claims (33 and 34) from which Claims 35 and 36 depend.

In view of the above remarks, the rejection of Claims 35 and 36 under 35 U.S.C. §103(a) as being unpatentable by Lindemann in view of Benthin and further in view of Schotz '343 should be withdrawn.

SONY EXHIBIT 1005 – 0544

The rejection of Claims 37 and 38 under 35 U.S.C. §103(a) as being unpatentable by Lindemann (U.S. Patent Application 2004/0223622) in view of Schotz '343 is respectfully traversed.

Schotz '343 is relied upon for a teaching of an analog output of 20 Hz to 20 KHz. However, Schotz '343 does not teach the deficiencies of Lindemann previously described in relation to independent Claims 33 and 34. Hence, the combination of Lindemann as modified Schotz '343 does not teach all the limitations of the base Claims (33 and 34) from which Claims 37 and 38 depend.

In view of the above remarks, the rejection of Claims 37 and 38 under 35 U.S.C. §103(a) as being unpatentable by Lindemann in view of Schotz '343 should be withdrawn.

The rejection of Claims 41 and 42 under 35 U.S.C. §103(a) as being unpatentable by Lindemann (U.S. Patent Application 2004/0223622) is respectfully traversed.

Lindemann as modified by the Examiner does not teach the deficiencies described in relation to independent Claims 33 and 34. Hence, Lindemann as modified does not teach the claimed invention since Lindemann as modified does not teach all the limitation of the base Claims (33 and 34) from which Claims 41 and 42 depend.

In view of the above remarks, the rejection of Claims 41 and 42 under 35 U.S.C. §103(a) as being unpatentable by Lindemann should be withdrawn.

SONY EXHIBIT 1005 – 0545

Conclusion

No amendment made was related to the statutory requirements of patentability unless expressly stated herein. No new claims have been added. Applicant believes that the application, as presently amended, is in condition for allowance. If for any reason the Examiner finds the application other than in condition for allowance, the Examiner is respectfully requested to call the undersigned attorney at the telephone number listed herein below to discuss any steps necessary for placing the application in condition for allowance.

Respectfully submitted,
THE PATEL LAW FIRM, P.C.

Date: November 29, 2006

Natu J. Patel
USPTO Reg. No. 39,559

NJP/lv/ec
Enclosure:

THE PATEL LAW FIRM, P.C.
2532 Dupont Drive
Irvine, California 92612-1524
Business: (949) 955-1077
Facsimile: (949) 955-1877

www.thepatellawfirm.com
NPatel@thePatelLawFirm.com

SONY EXHIBIT 1005 – 0546

I hereby certify that this correspondence (including Exhibits) is being deposited with the United States Postal Service via Express Mail in an envelope addressed to the Commissioner for Patents, P.O. Box 1450, Alexandria, VA 22313-1450, on August 15, 2006 (Express Mail Label No.: ET615079096US).

Natu J. Patel

IN THE UNITED STATES PATENT AND TRADEMARK OFFICE

In re Application of C. Earl Woolfork	:	
Serial No. 10/648,012	:	Group Art Unit: 2615
Confirm. No.: 3337	:	Examiner: Andrew C. Flanders
Filed: August 26, 2003	:	

For: WIRELESS DIGITAL AUDIO MUSIC SYSTEM

DECLARATION OF APPLICANT REGARDING LIMITED BATTERY LIFE UNDER 35 USC Section 132

I, C. Earl Woolfork, being duly sworn, depose and declare as follows:

1. I am the Inventor of the above referenced patent application ("Application"). I have personal knowledge of the following matter and if asked to testify, could and would testify competently, thereto.

2. Daphne Burton, my then attorney, conducted the interview with Examiner Flanders and Supervisory Patent Examiner Tran (collectively "Examiners") on June 13, 2006 regarding the pending office action dated May 17, 2006. I participated in that interview.

3. During the interview, among other things, we discussed U.S. Patent No. 5,771,441 issued to Altstatt ("Alstatt" or "'the 441 Patent") and U.S. Patent No. 5,946,343 issued to Schotz ("Schotz" or "'the 343 Patent").

4. Examiners requested that I submit evidence in an affidavit under 35 USC Section 132 explaining as to why the combination of Altstatt in view of Schotz is non-operative due to limited battery life.

5. I am hereby submitting this affidavit and all the supporting documentation to the Examiners for their consideration.

BEST AVAILABLE COPY

6. Altstatt's invention is based on an analog technology and is operated by a battery. Altstatt recites that the maximum value of V is fixed by the battery voltage of 1.5 or possibly 3 volts (Column 8, lines 22-24).

7. Schotz' invention is based on digital technology. Schotz's digital wireless speaker system requires 120VAC at 60Hz. Schotz further states that "[b]oth the transmitter 22 and the receiver 24 have respective power circuits (not shown) that convert input power (e.g., 120VAC at 60 Hz) into proper voltage levels for appropriate transmitter and receiver operation." Please refer to Column 14, lines 1-4.

8. Exhibit A, attached hereto, lists the commercially available Integrated Chip components ("IC Components") that both Altstatt and Schotz identify in their respective designs. Datasheets identifying electrical current requirements to operate the IC Components are included in Exhibit B.

9. Alstatt cannot be combined with Schotz. However, even assuming such a combination is possible, the Altstatt's battery powered analog headphone system will suffer from a significantly reduced playtime due to the power consumption of Schotz's numerous integrated circuit components, as articulated in the calculation spreadsheet attached hereto as Exhibit C.

10. The "playtime" is defined as the time the invention can be operated continuously before the battery must be changed or recharged. The playtime calculation consists of simple unit conversions as defined in chapter one, problem 1.5 and solution set of well known Theodore S. Rappaport's Wireless Communications Principles & Practice textbook. The relevant pages from the textbook are attached herewith as Exhibit D.

According to Exhibit D, the formula for the playtime calculation is:

{((60minutes/1hour) x BmA-h)/[(60 minutes/hour x 24 hour/day)(sum of IC currents in mA)]} x (24hour/day)

where B is the battery current capacity.

11. As shown in Exhibit C, Altstatt's portable invention will yield a playtime greater than 10 hours when operated with a small battery having a current capacity of 50mA-h (50 milliamp-hours).

12. If we were to hypothetically apply the same 50mA-h battery capacity to operate Schotz's invention, Exhibit C further shows that the frequency hopping spread spectrum ("FHSS") system will operate for approximately six minutes, and the direct sequence spread spectrum ("DSSS") system will operate for approximately eleven

minutes before requiring a new battery or a recharged battery. Please note that the FHSS and DSSS system operations are constrained to the lowest device (transmitter or receiver) operation time.

Respectfully Submitted,

Date: 4/14/06

By: C. Earl Woolfork

SONY EXHIBIT 1005 – 0549

EXHIBIT A

US Patent Number:5,771,441 Issued to Altstatt

Number	Component Description	Reference
1	Transmitter,BA1404	column 5, lines 34-37
2	Receiver,TA7766AF	column 8, lines 54-58
3	Receiver,TA7792F	column 8, lines 54-58

US Patent Number:5,946,343 Issued to Schotz

1	Digital Signal Processor,DSP56002	column 14, lines 49-50
2	A/D converter,SAA7360	column 7, lines 11-12
3	Stereo Filter MPEG,SAA2520	column 14, lines 47-48
4	MPEG,SAA2521	column 14, lines 47-48
5	Modulator,RF2422	column 10, lines 17-18
6	Power Amplifier,TQ9132	column 10, lines 31-32
7	Phase Locked Loop,MC12210	column 10, lines 49-50
8	Voltage Controlled Oscillator,SMV2500	column 14, lines 51-53
9	Low Noise Amplifier,MGA86576	column 11, lines 16-18
10	Digital Interface Transmitter,CS8402	column 11, lines 31-33
11	Digital to Analog Converter,TDA1305T	column 13, lines 57-59
12	Clock Recovery & Timing,TRU-050	column 12, lines 28-29
13	Demodulator,RF2703	column 12, lines 13-15
14	Microprocessor,PIC16C55	column 6, lines 63-66
15	DSSS Transmitter,CYLINK SSTX	column 16, lines 62-64
16	DSSS Receiver,CYLINK Part#SPECTRE	column 18, lines 4-5
17	Mixer,IAM81008	column 11, lines 16-18
18	Channel Encoder/Decoder,SRT241203	column 9, lines 25-26
19	Interleaver/De-interleaver,SRT-24INT	column 9, lines 50-52
20	Optical Digital Receiver,HK-3131-01	column 7, lines 40-43
21	Optical Digital Transmitter,HK-3131-03	column 13, lines 15-17
22	Voltage Controlled Oscillator,M2 D300	column 8, lines 49-50

EXHIBIT B

US Patent Number:5,771,441 Issued to Altstatt

Item Number 1: Transmitter, BA1404

● ブロックダイアグラム/Block Diagram T-77-05-05

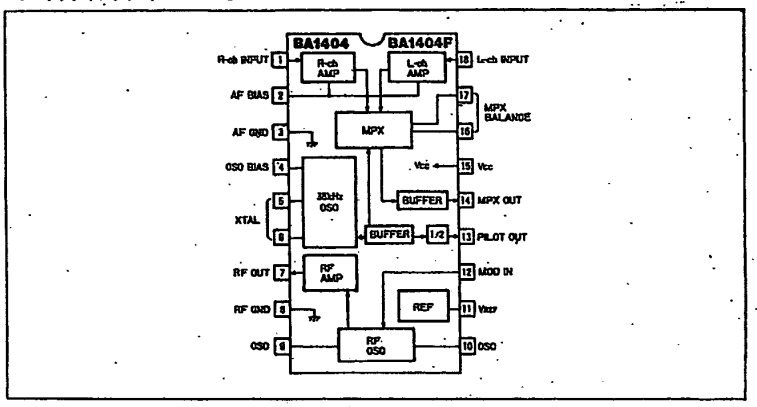

● 絶対最大定格/Absolute Maximum Ratings (Ta=25℃)

Parameter	Symbol	Limits	Unit
電源電圧	V_{CO}	2.5	V
許容損失	P_d	500*	mW
動作温度範囲	Topr	−25~75	℃
保存温度範囲	Tstg	−50~125	℃

* Ta=25℃以上で使用する場合は,1℃につき5mWを減じる

● 推奨動作条件/Recommended Operating Conditions (Ta=25℃)

Parameter	Symbol	Min.	Typ.	Max.	Unit
電源電圧	V_{CO}	1	1.25	2	V

● 電気的特性/Electrical Characteristics (Ta=25℃, V_{CC}=1.25V)

Parameter	Symbol	Min.	Typ.	Max.	Unit	Conditions
無信号時電流	I_Q	0.5	3	5	mA	—
入力インピーダンス	Z_{IN}	380	540	720	Ω	f_{IN}=1kHz
入力利得	G_V	30	37	—	dB	V_{IN}=0.5mV
チャンネルバランス	CB	—	—	2	dB	V_{IN}=0.5mV
MPX最大出力電圧	V_{OM}	200	—	—	mV_{P-P}	THD≦3%
MPX 38kHzもれ	V_{OO}	—	1	—	mV	無信号時
パイロット出力電圧	V_{OP}	460	580	—	mV_{P-P}	無負荷時
チャンネルセパレーション	Sep	25	45	—	dB	基準復調器にて
入力換算雑音電圧	V_{NIN}	—	1	—	pV_{rms}	38kHz停止時 IHF−A
RF部最大出力電圧	V_{OSO}	350	600	—	mV_{rms}	—

ELECTRICAL CHARACTERISTICS (Unless otherwise specified, Ta = 25°C, V_{CC} = 1.5V, f_m = 1kHz)

CHARACTERISTIC		SYMBOL	TEST CIR-CUIT	TEST CONDITION		MIN.	TYP.	MAX.	UNIT
Supply Current		I_{CC}	—	At lamp off		—	0.8	1.6	mA
Input Resistance		R_{IN}	—			—	36	—	kΩ
Output Resistance		R_{OUT}	—			—	15	—	kΩ
Max. Composite Signal Input Voltage		V_{in} (MAX) (STEREO)	—	L + R = 90%, P = 10%, THD = 5% $SW_1 \rightarrow R_{LED}$ = 50kΩ SW_5 → LPF ON		—	250	—	mV_{rms}
Separation		Sep	—	L + R = 90mV_{rms} P = 10mV_{rms} $SW_1 \rightarrow R_{LED}$ = 50kΩ SW_5 → LPF ON	f_m = 100Hz	—	30	—	dB
					f_m = 1kHz	22	35	—	
					f_m = 10kHz	—	30	—	
Total Harmonic Distortion	Monaural	THD (MONAURAL)	—	V_{in} = 100mV_{rms} $SW_1 \rightarrow R_{LED}$ = 500Ω		—	0.2	1.5	%
	Stereo	THD (STEREO)		L + R = 90mV_{rms}, P = 10mV_{rms} $SW_1 \rightarrow R_{LED}$ = 50kΩ SW_5 → LPF ON		—	0.4	—	
Voltage Gain		G_V	—	V_{in} = 100mV_{rms} $SW_1 \rightarrow R_{LED}$ = 500Ω		−4	−2	1	dB
Channel Balance		CB	—	V_{in} = 100mV_{rms} $SW_1 \rightarrow R_{LED}$ = 500Ω		—	0	2.0	dB
Lamp ON Sensitivity		V_L (ON)	—	Pilot input	$SW_1 \rightarrow R_{LED}$ = 50kΩ	—	—	5	mV_{rms}
Lamp OFF Sensitivity		V_L (OFF)			$SW_1 \rightarrow R_{LED}$ = 500Ω	7	—	—	
Stereo Lamp Hysteresis		V_H	—	to turn-off from turn-on		—	3	—	mV_{rms}
Capture Range		CR	—	P = 10mV_{rms}		—	±3	—	%
Carrier Leak (Note)	19kHz	CL	—	L + R = 90mV_{rms} P = 10mV_{rms} $SW_1 \rightarrow R_{LED}$ = 50kΩ		—	30	—	dB
	38kHz					—	50	—	
SCA Rejection Ratio		SCA Rej	—	P = 10mV_{rms}, L + R = 80mV_{rms} SCA = 10mV_{rms}, f_{SCA} = 67kHz $SW_1 \rightarrow R_{LED}$ = 50kΩ		—	70	—	dB
Signal To Noise Ratio		S/N	—	V_{in} = 100mV_{rms}, R_g = 620Ω $SW_1 \rightarrow R_{LED}$ = 500Ω		—	65	—	dB

(Note) Carrier leak of 38kHz is only carrier.

MAXIMUM RATINGS (Ta = 25°C)

CHARACTERISTIC		SYMBOL	RATING	UNIT
Supply Voltage		V_{CC}	5	V
Power Dissipation	TA7792P	P_D (Note)	750	mW
	TA7792F		350	
Operating Temperature		T_{opr}	−25~75	°C
Storage Temperature		T_{stg}	−55~150	°C

(Note) Derated above Ta = 25°C in the proportion of 6mW/°C for TA7792P, and of 2.8mW/°C for TA7792F.

ELECTRICAL CHARACTERISTICS

Unless otherwise specified, Ta = 25°C, V_{CC} = 1.5V

FM : V_{in} = 60dBμV EMF, f = 83MHz, f_m = 1kHz, Δf = ±22.5kHz

AM : V_{in} = 60dBμV EMF, f = 1MHz, f_m = 1kHz, MOD = 30%

CHARACTERISTIC			SYMBOL	TEST CIR-CUIT	TEST CONDITION	MIN.	TYP.	MAX.	UNIT
Supply Current			I_{CC} (FM)	1	V_{in} = 0	—	4.0	5.2	mA
			I_{CC} (AM)	1	V_{in} = 0	—	1.2	1.8	
FM	Input Limiting Voltage		V_{in} (lim)	1	−3dB limiting	—	10	16	dBμV EMF
	Total Harmonic Distortion		THD (FM)	1		—	0.25	—	%
	Signal To Noise Ratio		S/N (FM)	1		—	62	—	dB
	Quiescent Sensitivity		Q_S	1	S/N = 30dB	—	12	—	dBμV EMF
	AM Rejection Ratio		AMR	1	MOD = 30%	—	30	—	dB
	Oscillator Voltage		V_{osc}	2	f = 60MHz	53	90	135	mV_{rms}
	Oscillator Stop Supply Voltage		V_{stop} (FM)	1	V_{in} < −20dBμV EMF	—	0.85	0.95	V
	Recovered Output Voltage		V_{OD} (FM)	1		28	45	68	mV_{rms}
AM	Voltage Gain		G_V	1	V_{in} = 30dBμV EMF	14	25	50	mV_{rms}
	Recovered Output Voltage		V_{OD} (AM)	1		25	40	60	mV_{rms}
	Total Harmonic Distortion		THD (AM)	1		—	1.5	—	%
	Signal To Noise Ratio		S/N (AM)	1		—	40	—	dB
	Oscillator Stop Supply Voltage		V_{stop} (AM)	1	V_{in} < −20dBμV EMF	—	0.85	0.95	V
Output Resistance Pin⑧		FM	R_O (FM)	1	f = 1kHz	—	1.4	—	kΩ
		AM	R_O (AM)	1	f = 1kHz	—	8	—	

※ V_{in} : Open Display

DC ELECTRICAL CHARACTERISTICS

Table 2-3 DC Electrical Characteristics

Characteristics	Symbol	Min	Typ	Max	Units
Supply Voltage	V_{CC}	4.5	5.0	5.5	V
Input High Voltage					
•EXTAL	V_{IHC}	4.0	—	V_{CC}	V
•$\overline{\text{RESET}}$	V_{IHR}	2.5	—	V_{CC}	V
• MODA, MODB, MODC	V_{IHM}	3.5	—	V_{CC}	V
• All other inputs	V_{IH}	2.0	—	V_{CC}	V
Input Low Voltage					
• EXTAL	V_{ILC}	-0.5	—	0.6	V
• MODA, MODB, MODC	V_{ILM}	-0.5	—	2.0	V
• All other inputs	V_{IL}	-0.5	—	0.8	V
Input Leakage Current EXTAL, $\overline{\text{RESET}}$, MODA/$\overline{\text{IRQA}}$, MODB/$\overline{\text{IRQB}}$, MODC/$\overline{\text{NMI}}$, $\overline{\text{DR}}$, $\overline{\text{BR}}$, $\overline{\text{WT}}$, CKP, PINIT, $\overline{\text{MCBG}}$, $\overline{\text{MCBCLR}}$, MCCLK, D20IN	I_{IN}	-1	—	1	µA
Tri-state (Off-state) Input Current (@ 2.4 V/0.4 V)	I_{TSI}	-10	—	10	µA
Output High Voltage (I_{OH} = -0.4 mA)	V_{OH}	2.4	—	—	V
Output Low Voltage (I_{OL} = 3.0 mA) $\overline{\text{HREQ}}$ I_{OL} = 6.7 mA, TXD I_{OL} = 6.7 mA	V_{OL}	—	—	0.4	V
Internal Supply Current at 40 MHz[1]	I_{CCI}	—	90	105	mA
• In Wait mode[2]	I_{CCW}	—	12	20	mA
• In Stop mode[2]	I_{CCS}	—	2	95	µA
Internal Supply Current at 66 MHz[1]	I_{CCI}	—	95	130	mA
• In Wait mode[2]	I_{CCW}	—	15	25	mA
• In Stop mode[2]	I_{CCS}	—	2	95	µA
Internal Supply Current at 80 MHz[1]	I_{CCI}	—	115	160	mA
• In Wait mode[2]	I_{CCW}	—	18	30	mA
• In Stop mode[2]	I_{CCS}	—	2	95	µA
PLL Supply Current[3]					
• 40 MHz		—	1.0	1.5	mA
• 66 MHz		—	1.1	1.5	mA
• 80 MHz		—	1.2	1.8	mA
CKOUT Supply Current[4]					
• 40 MHz		—	14	20	mA
• 66 MHz		—	28	35	mA
• 80 MHz		—	34	42	mA
Input Capacitance[5]	C_{IN}	—	10	—	pF

Notes:
1. **Section 4 Design Considerations** describes how to calculate the external supply current.
2. In order to obtain these results all inputs must be terminated (i.e., not allowed to float).
3. Values are given for PLL enabled.
4. Values are given for CKOUT enabled.
5. Periodically sampled and not 100% tested

Table 1 Output data formats

ODF2	ODF1	MODE
0	0	test
0	1	format 1
1	0	format 2
1	1	I^2S

Reset

When pin $\overline{\text{RESET}}$ is held LOW the data outputs are set to zero. The $\overline{\text{RESET}}$ pin operates as a Schmitt trigger, enabling a power-on reset function by using an external RC circuit.

LIMITING VALUES

In accordance with the Absolute Maximum Rating System (IEC 134).

SYMBOL	PARAMETER	CONDITIONS	MIN.	MAX.	UNIT
V_{DDA}	analog supply voltage	note 1	−0.5	+6.5	V
V_I	DC input voltage		−0.5	+6.5	V
I_{IK}	DC input diode current		–	±20	mA
V_O	DC output voltage		−0.5	V_{DD} + 0.5	V
I_O	DC output source or sink current		–	±20	mA
I_{DD} or I_{SS}	total DC V_{DD} or V_{SS} current		–	±0.5	A
T_{amb}	operating ambient temperature		−40	+85	°C
T_{stg}	storage temperature		−65	+150	°C
V_{es}	electrostatic handling	note 2	−2000	+2000	V
		note 3	−200	+200	V

Notes

1. All V_{DD} and V_{SS} pins must be externally connected to the same power supply.
2. Equivalent to discharging a 100 pF capacitor via a 1.5 kΩ series resistor with a rise time of 15 ns.
3. Equivalent to discharging a 200 pF capacitor via a 2.5 μH series inductor.

CHARACTERISTICS

V_{DD} = 5 V; T_{amb} = 25 °C; $f_{xtal} = 256f_s$; f_s = 44.1 kHz; unless otherwise specified.

SYMBOL	PARAMETER	CONDITIONS	MIN.	TYP.	MAX.	UNIT
Supplies						
V_{DDA}	analog supply voltage		4.5	5.0	5.5	V
I_{DDA}	analog supply current		–	43	–	mA
V_{DDD}	digital supply voltage		4.5	5.0	5.5	V
I_{DDD}	digital supply current		–	50	–	mA
P_{tot}	total power consumption		–	465	–	mW

LIMITING VALUES

In accordance with the Absolute Maximum System (IEC 134).

SYMBOL	PARAMETER	CONDITIONS	MIN.	MAX.	UNIT
V_{DD}	supply voltage		−0.5	6.5	V
V_I	input voltage	note 1	−0.5	V_{DD} + 0.5	V
I_{SS}	supply current from V_{SS}		−	160	mA
I_{DD}	supply current in V_{DD}		−	160	mA
I_I	input current		−10	10	mA
I_O	output current		−20	20	mA
P_{tot}	total power dissipation		−	880	mW
T_{stg}	storage temperature range		−55	150	°C
T_{amb}	operating ambient temperature range		- 40	85	°C
V_{es1}	electrostatic handling	note 2	−1500	1500	V
V_{es2}	electrostatic handling	note 3	−70	70	V

Notes

1. Input voltage should not exceed 6.5 V unless otherwise specified
2. Equivalent to discharging a 100 pF capacitor through a 1.5 kΩ series resistor
3. Equivalent to discharging a 200 pF capacitor through a 0 Ω series resistor.

DC CHARACTERISTICS

T_{amb} = −40 to 85 °C; V_{DD} = 3.8 to 5.5 V unless otherwise specified.

SYMBOL	PARAMETER	CONDITIONS	MIN.	TYP.	MAX.	UNIT
Supply						
V_{DD}	supply voltage range		3.8	5.0	5.5	V
I_{DD}	operating current	V_{DD} = 5 V (note 1)	−	82	110	mA
I_{DD}	operating current	V_{DD} = 3.8 V (note 1)	−	58	80	mA
Inputs URDA, SBDIR, SBEF, LTCLK, LTCNT0, LTNCT1, X22IN, X24IN						
V_{IH}	HIGH level input voltage		$0.7V_{DD}$	−	−	V
V_{IL}	LOW level input voltage		−	−	$0.3V_{DD}$	V
$-I_I$	input current	V_i = 0 V; T_{amb} = 25 °C	−	−	10	µA
$+I_I$	input current	V_i = 5.5 V; T_{amb} = 25 °C	−	−	10	µA
Inputs PWRDWN, LTENA						
V_{IH}	HIGH level input voltage		$0.7V_{DD}$	−	−	V
V_{IL}	LOW level input voltage		−	−	$0.3V_{DD}$	V
$+I_I$	input current	$V_i = V_{DD}$; T_{amb} = 25 °C	40	−	250	µA

DC CHARACTERISTICS

V_{DD} = 3.8 to 5.5 V; T_{amb} = –40 to 85 °C; unless otherwise specified.

SYMBOL	PARAMETER	CONDITIONS	MIN.	TYP.	MAX.	UNIT
Supply						
V_{DD}	supply voltage range		3.8	5	5.5	V
I_{DD}	operating current	V_{DD} = 3.8 V	–	15	30	mA
I_{DD}	operating current	V_{DD} = 5 V	–	25	50	mA
I_{PWRDWN}	stand-by current	in power-down mode	–	100	–	µA
Inputs						
V_{IL}	LOW level input voltage		0	–	0.3 V_{DD}	V
V_{IH}	HIGH level input voltage		0.7 V_{DD}	–	V_{DD}	V
I_I	input current		–	–	10	µA
Outputs						
V_{OL}	LOW level output voltage	note 1	–	–	0.4	V
V_{OH}	HIGH level output voltage	note 1	V_{DD} – 0.5	–	–	V
3-state outputs						
I_{oz}	OFF state current	V_i = 0 to 5.5 V	–	–	10	µA

Note

1. Maximum load current for LTDATA, LTCNT1C, LTCNT0C, LTENC, LTCLKC, TEST1, TEST2, FDAC, FDAF = 2 mA; for LTDATAC = 3 mA.

US Patent Number:5,946,343 Issued to Schotz

Item Number 5: Modulator, RF2422

RF2422

Absolute Maximum Ratings

Parameter	Rating	Unit
Supply Voltage	-0.5 to +7.5	V_{DC}
Input LO and RF Levels	+10	dBm
Operating Ambient Temperature	-40 to +85	°C
Storage Temperature	-40 to +150	°C

Caution! ESD sensitive device.

RF Micro Devices believes the furnished information is correct and accurate at the time of this printing. However, RF Micro Devices reserves the right to make changes to its products without notice. RF Micro Devices does not assume responsibility for the use of the described product(s).

Parameter	Specification			Unit	Condition
	Min.	Typ.	Max.		
Carrier Input					T=25°C, V_{CC}=5V
Frequency Range	800		2500	MHz	
Power Level	-6		+6	dBm	
Input VSWR		5:1			At 900MHz
		1.8:1			At 1800MHz
		1.2:1			At 2500MHz
Modulation Input					
Frequency Range	DC		250	MHz	
Reference Voltage (V_{REF})	2.0	3.0		V	
Maximum Modulation (I&Q)			V_{REF}±1.0	V	
Gain Asymmetry		0.2		dB	
Quadrature Phase Error		3		°	
Input Resistance		30		kΩ	
Input Bias Current			40	µA	
RF Output					LO=2GHz and -5dBm, I&Q=2.0V_{PP} SSB
Output Power	-3		+3	dBm	
Output Impedance		50		Ω	
Output VSWR		3.5:1			At 900MHz
		1.3:1			At 2000MHz
		1.15:1			At 2500MHz
Harmonic Output	-30	-35		dBc	
Sideband Suppression	25	35		dB	
Carrier Suppression	30	35		dB	
IM_3 Suppression	30	35		dB	Intermodulation of the carrier and the desired RF signal
	25	30		dB	Intermodulation of baseband signals
Broadband Noise Floor					At 20MHz offset, V_{CC}=5V. Tied to V_{REF}: ISIG, QSIG, IREF, and QREF.
		-145		dBm/Hz	At 850MHz
		-152		dBm/Hz	At 1900MHz
Power Down					
Turn On/Off Time			100	ns	
PD Input Resistance	50			kΩ	
Power Control "ON"			2.8	V	Threshold voltage
Power Control "OFF"	1.0	1.2		V	Threshold voltage
Power Supply					
Voltage		5		V	Specifications
	4.5		6.0	V	Operating Limits
Current		45	50	mA	Operating
			25	µA	Power Down

5 MODULATORS AND UPCONVERTERS

SONY EXHIBIT 1005 – 0558

US Patent Number:5,946,343 Issued to Schotz

Item Number 6: Power Amplifier, TQ9132

TriQuint SEMICONDUCTOR
WIRELESS COMMUNICATIONS DIVISION

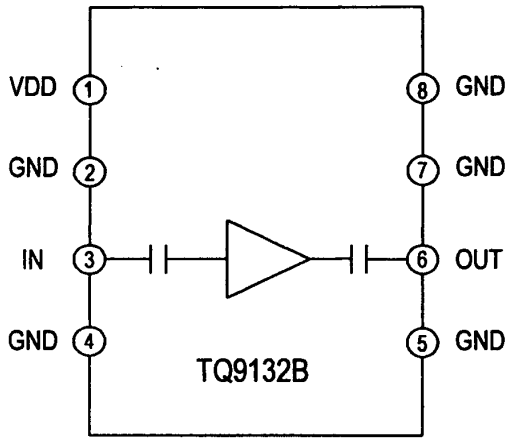

TQ9132B

DATA SHEET

3V Cellular TDMA/AMPS Power Amplifier IC

Features

- *Single 3V- 6V supply*
- *Wide frequency range*
- *+17 dBm output power*
- *Input and output matched to 50 Ω*
- *SO-8 surface mount plastic package*

Applications

- *Power Amplifier drivers*
- *PCN Medium-power amplifiers*
- *Medium-power WLANs*
- *CDPD Modems*
- *Base Station receivers*

Product Description

The TQ9132B amplifier is an 800-2500 MHz amplifier capable of providing moderate output power (50 mW) for a wide variety of transmit and receive applications. The amplifier's input and output are matched to 50 Ω with internal circuitry, simplifying interfaces to 50 Ω systems. In addition, DC blocking capacitors are included on chip, permitting direct connections to the input and output. Its 8-pin surface mount package and low cost are well suited to many wireless communications applications.

Electrical Specifications[1]

Parameter	*Min*	*Typ*	*Max*	*Units*
Gain	13.5	16		dB
Output 1 dB Gain Compression	15.5	17		dBm
Input Return Loss		12		dB
Output Return Loss		12		dB
DC Supply Current		85	100	MA

Note 1: Test Conditions: V_{DD} = 5.0 V, Freq. = 2500 MHz, T_A= 25° C.

Note 2: . Min/max values 100% production tested

ELECTRICAL CHARACTERISTICS (V_{CC} = 2.7 to 5.5 V; T_A = –40 to +85°C, unless otherwise noted.)

Parameter	Symbol	Min	Typ	Max	Unit	Condition
Supply Current for V_{CC}	I_{CC}	–	8.8	13.0	mA	Note 1
		–	10.2	16.0		Note 2
Supply Current for V_P	I_P	–	0.7	1.1	mA	Note 3
		–	0.8	1.3		Note 4
Operating Frequency f_{IN}max f_{IN}min	F_{IN}	2500 –	– –	– 500	MHz	Note 5
Operating Frequency (OSCin)	F_{OSC}	–	12	20	MHz	Crystal Mode
		–	–	40	MHz	External Reference Mode
Input Sensitivity f_{IN}	V_{IN}	200	–	1000	mVpp	
OSCin	V_{OSC}	500	–	2200	mVpp	
Input HIGH Voltage CLK, DATA, LE, FC	V_{IH}	0.7 V_{CC}	–	–	V	
Input LOW Voltage CLK, DATA, LE, FC	V_{IL}	–	–	0.3 V_{CC}	V	V_{CC} = 5.5 V
Input HIGH Current (DATA and CLK)	I_{IH}	–	1.0	2.0	µA	V_{CC} = 5.5 V
Input LOW Current (DATA and CLK)	I_{IL}	–10	–5.0	–	µA	V_{CC} = 5.5 V
Input Current (OSCin)	I_{OSC}	– –	130 –310	– –	µA	OSCin = V_{CC} OSCin = V_{CC} – 2.2 V
Input HIGH Current (LE and FC)	I_{IH}	–	1.0	2.0	µA	
Input LOW Current (LE and FC)	I_{IL}	–75	–60	–	µA	
Charge Pump Output Current	I_{Source}[6]	–2.6	–2.0	–1.4	mA	V_{Do} = V_p/2; V_p = 2.7 V
Do and BISW	I_{Sink}[6]	+1.4	+2.0	+2.6		V_{BISW} = V_p/2; V_p = 2.7 V
	I_{Hi-Z}	–15	–	+15	nA	0.5< V_{DO} < V_p – 0.5 0.5 < V_{BISW} < V_p – 0.5
Output HIGH Voltage (LD, ϕR, ϕP, f_{OUT})	V_{OH}	4.4	–	–	V	V_{CC} = 5.0 V
		2.4	–	–	V	V_{CC} = 3.0 V
Output LOW Voltage (LD, ϕR, ϕP, f_{OUT})	V_{OL}	–	–	0.4	V	V_{CC} = 5.0 V
		–	–	0.4	V	V_{CC} = 3.0 V
Output HIGH Current (LD, ϕR, ϕP, f_{OUT})	I_{OH}	–1.0	–	–	mA	
Output LOW Current (LD, ϕR, ϕP, f_{OUT})	I_{OL}	1.0	–	–	mA	

1. V_{CC} = 3.3 V, all outputs open.
2. V_{CC} = 5.5 V, all outputs open.
3. V_P = 3.3 V, all outputs open.
4. V_p = 6.0 V, all outputs open.
5. AC coupling, F_{IN} measured with a 1000 pF capacitor.
6. Source current flows out of the pin and sink current flows into the pin.

Figure 8. Typical External Charge Pump Circuit

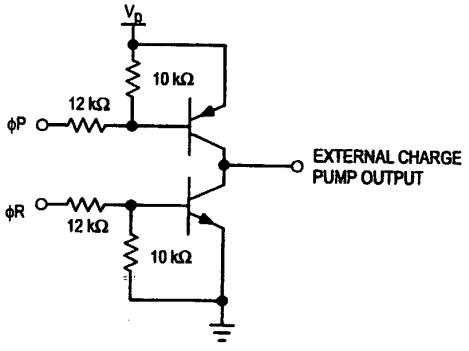

Figure 9. Typical Lock Detect Circuit

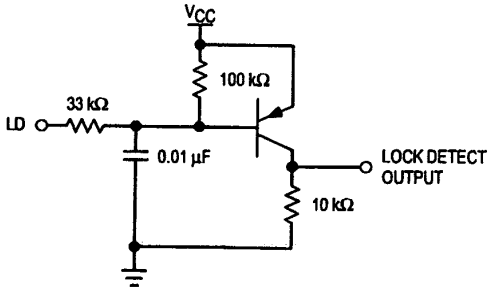

US Patent Number:5,946,343 Issued to Schotz

Item Number 8: Voltage Controlled Oscillator, SMV2500

Z-Communications, Inc.
9939 Via Pasar • San Diego, CA 92126
TEL (619) 621-2700 FAX (619) 621-2722

SMV2500L

VOLTAGE CONTROLLED OSCILLATOR

Rev E5

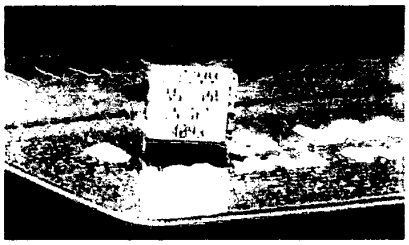

PHASE NOISE (1 Hz BW, typical)

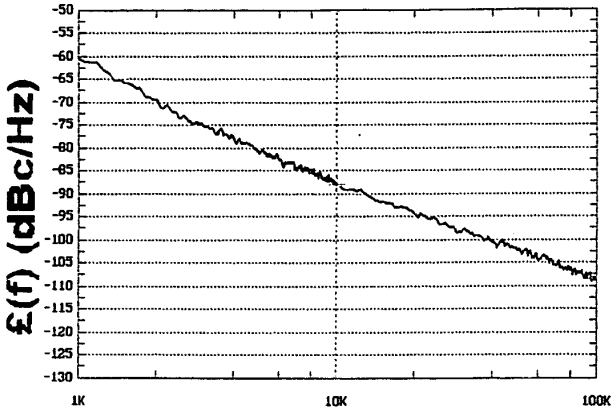

FEATURES
◦ Frequency Range: 2400 - 2484 MHz
◦ Tuning Voltage: 0-3 Vdc
◦ SUB-L - Style Package

APPLICATIONS
◦ Personal Communications Systems
◦ WLAN
◦ Portable Radios

PERFORMANCE SPECIFICATIONS	VALUE	UNITS
Oscillation Frequency Range	2400 - 2484	MHz
Phase Noise @ 10 kHz offset (1 Hz BW, typ.)	-87	dBc/Hz
Harmonic Suppression (2nd, typ.)	-20	dBc
Tuning Voltage	0-3	Vdc
Tuning Sensitivity (avg.)	105	MHz/V
Power Output	9.25±2.75	dBm
Load Impedance	50	Ω
Input Capacitance (max.)	50	pF
Pushing	<30	MHz/V
Pulling (14 dB Return Loss, Any Phase)	<25	MHz
Operating Temperature Range	-40 to 85	°C
Package Style	SUB-L	
POWER SUPPLY REQUIREMENTS		
Supply Voltage (Vcc, nom.)	3	Vdc
Supply Current (Icc, typ.)	19	mA

All specifications are typical unless otherwise noted and subject to change without notice.

APPLICATION NOTES
• AN-100/1 : Mounting and Grounding of VCOs
• AN-102 : Proper Output Loading of VCOs
• AN-107 : How to Solder Z-COMM VCOs

NOTES:

© Z-Communications, Inc.

All rights reserved

Absolute Maximum Ratings

Symbol	Parameter	Units	Absolute Maximum[1]
V_d	Device Voltage, RF output to ground	V	9
V_g	Device Voltage, RF input to ground	V	+0.5 -1.0
P_{in}	CW RF Input Power	dBm	+13
T_{ch}	Channel Temperature	°C	150
T_{STG}	Storage Temperature	°C	-65 to 150

Thermal Resistance[2]:
$\theta_{ch-c} = 110°C/W$

Notes:
1. Operation of this device above any one of these limits may cause permanent damage.
2. T_c = 25°C (T_c is defined to be the temperature at the package pins where contact is made to the circuit board).

MGA-86576 Electrical Specifications, T_C = 25°C, Z_o = 50 Ω, V_d = 5 V

Symbol	Parameters and Test Conditions		Units	Min.	Typ.	Max.
Gp	Power Gain ($\|S_{21}\|^2$)	f = 1.5 GHz	dB		21.2	
		f = 2.5 GHz			23.7	
		f = 4.0 GHz		20	23.1	
		f = 6.0 GHz			19.3	
		f = 8.0 GHz			15.4	
NF_{50}	50 Ω Noise Figure	f = 1.5 GHz	dB		2.2	
		f = 2.5 GHz			1.9	
		f = 4.0 GHz			2.0	2.3
		f = 6.0 GHz			2.3	
		f = 8.0 GHz			2.5	
NF_o	Optimum Noise Figure (Input tuned for lowest noise figure)	f = 1.5 GHz	dB		1.6	
		f = 2.5 GHz			1.5	
		f = 4.0 GHz			1.6	
		f = 6.0 GHz			1.8	
		f = 8.0 GHz			2.1	
P_{1dB}	Output Power at 1 dB Gain Compression	f = 1.5 GHz	dBm		6.4	
		f = 2.5 GHz			7.0	
		f = 4.0 GHz			6.3	
		f = 6.0 GHz			4.3	
		f = 8.0 GHz			3.8	
IP_3	Third Order Intercept Point	f = 4.0 GHz	dBm		16.0	
VSWR	Input VSWR	f = 1.5 GHz			3.6:1	
		f = 2.5 GHz			3.3:1	
		f = 4.0 GHz			2.2:1	3.6:1
		f = 6.0 GHz			1.4:1	
		f = 8.0 GHz			1.2:1	
	Output VSWR	f = 1.5 GHz			2.5:1	
		f = 2.5 GHz			2.1:1	
		f = 4.0 GHz			1.7:1	
		f = 6.0 GHz			1.4:1	
		f = 8.0 GHz			1.3:1	
I_d	Device Current		mA	9	16	22

ABSOLUTE MAXIMUM RATINGS (GND = 0V, all voltages with respect to ground.)

Parameter		Symbol	Min	Max	Units
DC Power Supply		VD+		6.0	V
Input Current, Any Pin Except Supply	Note 1	I_{in}	-	±10	mA
Digital Input Voltage		V_{IND}	-0.3	VD+	V
Ambient Operating Temperature (power applied)		T_A	-55	125	°C
Storage Temperature		T_{stg}	-65	150	°C

Notes: 1. Transient currents of up to 100 mA will not cause SCR latch-up.

WARNING: Operation at or beyond these limits may result in permanent damage to the device. Normal operation is not guaranteed at these extremes.

RECOMMENDED OPERATING CONDITIONS

(GND = 0V; all voltages with respect to ground)

Parameter		Symbol	Min	Typ	Max	Units
DC Voltage		VD+	4.5	5.0	5.5	V
Supply Current	Note 2	I_{DD}		1.5	5	mA
Ambient Operating Temperature: CS8401/2A-CP or -CS	Note 3	T_A	0	25	70	°C
CS8401/2A-IP or -IS			-40		85	°C
Power Consumption	Note 2	P_D		7.5	25	mW

Notes: 2. Drivers open (unloaded). The majority of power is used in the load connected to the drivers.
3. The '-CP' and '-CS' parts are specified to operate over 0 to 70 °C but are tested at 25 °C only. The '-IP' and '-IS' parts are tested over the full -40 to 85 °C temperature range.

DIGITAL CHARACTERISTICS

(T_A = 25 °C for suffixes 'CP' & 'CS', T_A = -40 to 85 °C for 'IP' & 'IS'; VD+ = 5V ± 10%)

Parameter			Symbol	Min	Typ	Max	Units
High-Level Input Voltage			V_{IH}	2.0		V_{DD}+0.3	V
Low-Level Input Voltage			V_{IL}	-0.3		+0.8	V
High-Level Output Voltage	(I_O = 200µA)		V_{OH}	V_{DD}-1.0			V
Low-Level Output Voltage	(I_O = 3.2mA)		V_{OL}			0.4	V
Input Leakage Current			I_{in}		1.0	10	µA
Master Clock Frequency:	CS8401A	Note 4	MCK			22	MHz
	CS8402A	Note 4				7.1	MHz
Master Clock Duty Cycle	CS8401/2A			40		60	%

Notes: 4. MCK for the CS8401 must be 128, 192, 256, or 384x the input word rate based on M0 and M1 in control register 2. MCK for the CS8402A must be 128x the input word rate, except in Transparent Mode where MCK is 256x the input word rate.

Specifications are subject to change without notice.

QUICK REFERENCE DATA

SYMBOL	PARAMETER	CONDITIONS	MIN.	TYP.	MAX.	UNIT
V_{DDD}	digital supply voltage	note 1	3.4	5.0	5.5	V
V_{DDA}	analog supply voltage	note 1	3.4	5.0	5.5	V
V_{DDO}	operational amplifier supply voltage	note 1	3.4	5.0	5.5	V
I_{DDD}	digital supply current	V_{DDD} = 5 V; at code 00000H	–	30	–	mA
I_{DDA}	analog supply current	V_{DDA} = 5 V; at code 00000H	–	5.5	8	mA
I_{DDO}	operating amplifier supply current	V_{DDO} = 5 V; at code 00000H	–	6.5	9	mA
$V_{FS(rms)}$	full-scale output voltage (RMS value)	$V_{DDD} = V_{DDA} = V_{DDO}$ = 5 V	1.425	1.5	1.575	V
(THD + N)/S	total harmonic distortion plus noise-to-signal ratio	at 0 dB signal level	–	–90	–81	dB
			–	0.003	0.009	%
		at –60 dB signal level	–	–44	–40	dB
			–	0.63	0.1	%
		at –60 dB signal level; A-weighted	–	–46	–	dB
			–	0.5	–	%
S/N	signal-to-noise ratio at bipolar zero	A-weighting; at code 00000H	100	108	–	dB
BR_{ns}	input bit rate at data input	f_s = 48 kHz; normal speed	–	–	3.072	Mbits
BR_{ds}	input bit rate at data input	f_s = 48 kHz; double speed	–	–	6.144	Mbits
f_{sys}	system clock frequency		6.4	–	18.432	MHz
TC_{FS}	full scale temperature coefficient at analog outputs (VOL and VOR)		–	$\pm 100 \times 10^{-6}$	–	
T_{amb}	operating ambient temperature		–30	–	+85	°C

Note

1. All V_{DD} and V_{SS} pins must be connected to the same supply.

Item Number 12: Clock Recovery & Timing, TRU-050

Parameter	Symbol	Min	Max	Unit
Input NRZ Data Rates	DATAIN	0.008	65.536	MHz
Input RZ Data and Clock Rates [1]	DATAIN	0.008	32.768	MHz
Nominal Output Frequency				
Output 1	OUT1	12.0	65.536	MHz
Output 2 [2]	OUT2	0.05	32.768	MHz
Supply Voltage [3]	V_{DD}	4.5	5.5	V
Supply Current (V_{DD} = 5.5 V)	I_{DD}	25	63	mA
Output Voltage Levels (V_{DD} = 4.5 V)				
Output Logic High [4]	V_{OH}	2.5	-	V
Output Logic Low [4]	V_{OL}	-	0.5	V
Transition Times: [4]				
Rise Time (0.5 V to 2.5 V)	t_R	0.5	5	ns
Fall Time (2.5 V to 0.5 V)	t_F	0.5	5	ns
Symmetry or Duty cycle [5]				
Output 1	SYM 1	40	60	%
Output 2	SYM 2	45	55	%
Recovered Clock	R_{CLK}	40	60	%
Input Data				
Input Logic High	V_{IH}	2.0	-	V
Input Logic Low	V_{IL}	-	0.8	V
Control Voltage Bandwith (-3 dB,VC = 2.50 V)	BW	50	-	kHz
Sensitivity @ VC = VO	$\Delta F/\Delta V_C$	See Figure 11		ppm/V
Loss of Signal Indication [6]	L_{OS}			
Output Logic High	V_{OH}	2.5	-	V
Output Logic Low	V_{OL}	-	0.5	V
Nominal Output Frequency on Loss of Signal: [7]				
Output 1	OUT1	-75 ppm	75 ppm	ppm from fo 1
Output 2	OUT2	-75 ppm	75 ppm	ppm from fo 2
Phase Detector Gain	K_D	-0.53 x Data Density		V/rad

Table 1.

1. For input RZ data, Manchester encoded data, and input clock recovery applications, the output clock must run at two times the input rate to ensure that the input is clocked correctly. Since the output clock has a maximum frequency of 65.536 MHz, these inputs are limited to a maximum rate of 32.768 MHz.
2. OUT2 is a binary submultiple of OUT1, or it may be disabled.
3. A 3.3 volt supply option is also available.
4. Figure 1 defines these parameters. Figure 2 illustrates the equivalent five-gate MTTL load and operating conditions under which these parameters are specified and tested.
5. Symmetry is the ON TIME/PERIOD in percent with V_S = 1.4 V for TTL, per figure 1.
6. A loss of signal (LOS) indicator is set to a logic high if no transitions are detected at DATAIN after 256 clock cycles. As soon as a transition occurs at DATAIN, LOS is set to a logic low.
7. Accuracy at room temperature. Stability over temperature is typically ± 20 ppm.

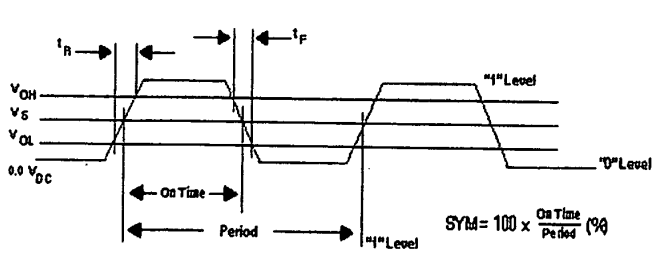

Figure 1.

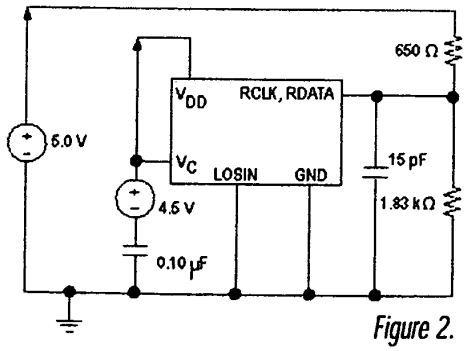

Figure 2.

Vectron International 267 Lowell Road, Hudson, NH 03051 Tel: 1-88-VECTRON-1 e-mail: vectron@vectron.com

SONY EXHIBIT 1005 – 0565

RF2703

Absolute Maximum Ratings

Parameter	Rating	Unit
Supply Voltage	-0.5 to 7.0	V_{DC}
IF Input Level	500	mV_{PP}
Operating Ambient Temperature	-40 to +85	°C
Storage Temperature	-40 to +150	°C

Caution! ESD sensitive device.

RF Micro Devices believes the furnished information is correct and accurate at the time of this printing. However, RF Micro Devices reserves the right to make changes to its products without notice. RF Micro Devices does not assume responsibility for the use of the described product(s).

Parameter	Specification			Unit	Condition
	Min.	Typ.	Max.		
Overall					T=25°C, V_{CC}=3.0V, IF=100MHz, LO=200MHz, F_{MOD}=500kHz
IF Frequency Range		0.1 to 250		MHz	For IF frequencies below ~2.5MHz, the LO should be a square wave. IF frequencies lower than 100kHz are attainable if the LO is a square wave and sufficiently large DC blocking capacitors are used.
Baseband Frequency Range		DC to 50		MHz	
Input Impedance		1200 || 1pF		Ω	Each input, single-ended
LO					
Frequency					Twice (2x) the IF frequency. For IF frequencies below ~2.5MHz, the LO should be a square wave. IF frequencies lower than 100kHz are attainable if the LO is a square wave and sufficiently large DC blocking capacitors are used.
Level		0.06 to 1		V_{PP}	
Input Impedance		500 || 1pF		Ω	
Demodulator Configuration					IF_{IN}=28mV_{PP}, LO=200mV_{PP}, Z_{LOAD}=10kΩ
Output Impedance		50 || 1pF		Ω	Each output, I_{OUT} and Q_{OUT}
Maximum Output		1.4		V_{PP}	Saturated
Voltage Gain		20		dB	V_{CC}=3.0V
	22.5	24	25.1	dB	V_{CC}=5.0V
Noise Figure		24		dB	Single Sideband, IF Input of device reactively matched
		35		dB	Single Sideband, 50Ω shunt resistor at IF Input
Input Third Order Intercept Point (IIP_3)		-22		dBm	V_{CC}=3.0V, IF Input of device reactively matched
		-11		dBm	V_{CC}=3.0V, 50Ω shunt resistor at IF Input
		-19			V_{CC}=5.0V, IF Input of device reactively matched
		-8		dBm	V_{CC}=5.0V, 50Ω shunt resistor at IF Input
		-28		dBm	V_{CC}=5.0V, IF Input of device reactively matched, Z_{LOAD}=50Ω
I/Q Amplitude Balance		0.1	0.5	dB	
Quadrature Phase Error		<±1		°	
DC Output		800		mV	V_{CC}=3.0V, I_{OUT} and Q_{OUT} to GND
	2.0	2.4	2.8	V	V_{CC}=5.0V, I_{OUT} and Q_{OUT} to GND
DC Offset		<10	60	mV	I_{OUT} to Q_{OUT}

SONY EXHIBIT 1005 – 0566

Modulator Configuration					IF_{IN}=28mV$_{PP}$, LO=200mV$_{PP}$. Z_{LOAD}=1200Ω
Maximum Output		200		mV$_{PP}$	Saturated
Input Voltage		90		mV$_{PP}$	Single Sideband, 1dB Gain Compression.
Voltage Gain		6		dB	Single Sideband
I/Q Amplitude Balance		0.1		dB	
Quadrature Phase Error		<±1		°	
Carrier Suppression		25		dBc	Unadjusted. Carrier Suppression may be optimized further by adjusting the DC offset level between the A and B inputs.
Sideband Suppression		30		dBc	
Power Supply					
Voltage		2.7 to 6		V	Operating limits
Current		8		mA	V_{CC}=3.0V
	8	10	12	mA	V_{CC}=5.0V

SONY EXHIBIT 1005 – 0567

12.1 DC Characteristics: PIC16C54/55/56/57-RC, XT, 10, HS, LP (Commercial)

PIC16C54/55/56/57-RC, XT, 10, HS, LP (Commercial)			Standard Operating Conditions (unless otherwise specified) Operating Temperature 0°C ≤ TA ≤ +70°C for commercial				
Param No.	**Symbol**	**Characteristic/Device**	**Min**	**Typ†**	**Max**	**Units**	**Conditions**
D001	VDD	**Supply Voltage**					
		PIC16C5X-RC	3.0	—	6.25	V	
		PIC16C5X-XT	3.0	—	6.25	V	
		PIC16C5X-10	4.5	—	5.5	V	
		PIC16C5X-HS	4.5	—	5.5	V	
		PIC16C5X-LP	2.5	—	6.25	V	
D002	VDR	**RAM Data Retention Voltage**(1)		1.5*	—	V	Device in SLEEP Mode
D003	VPOR	**VDD Start Voltage** to ensure Power-on Reset		VSS	—	V	See Section 5.1 for details on Power-on Reset
D004	SVDD	**VDD Rise Rate** to ensure Power-on Reset	0.05*	—	—	V/ms	See Section 5.1 for details on Power-on Reset
D010	IDD	**Supply Current**(2)					
		PIC16C5X-RC(3)	—	1.8	3.3	mA	FOSC = 4 MHz, VDD = 5.5V
		PIC16C5X-XT	—	1.8	3.3	mA	FOSC = 4 MHz, VDD = 5.5V
		PIC16C5X-10	—	4.8	10	mA	FOSC = 10 MHz, VDD = 5.5V
		PIC16C5X-HS	—	4.8	10	mA	FOSC = 10 MHz, VDD = 5.5V
		PIC16C5X-HS	—	9.0	20	mA	FOSC = 20 MHz, VDD = 5.5V
		PIC16C5X-LP	—	15	32	µA	FOSC = 32 kHz, VDD = 3.0V, WDT disabled
D020	IPD	**Power-down Current**(2)	—	4.0	12	µA	VDD = 3.0V, WDT enabled
			—	0.6	9	µA	VDD = 3.0V, WDT disabled

* These parameters are characterized but not tested.

† Data in "Typ" column is based on characterization results at 25°C. This data is for design guidance only and is not tested.

Note 1: This is the limit to which VDD can be lowered in SLEEP mode without losing RAM data.

2: The supply current is mainly a function of the operating voltage and frequency. Other factors such as bus loading, oscillator type, bus rate, internal code execution pattern and temperature also have an impact on the current consumption.

a) The test conditions for all IDD measurements in active Operation mode are: OSC1 = external square wave, from rail-to-rail; all I/O pins tristated, pulled to VSS, T0CKI = VDD, $\overline{MCLR}$ = VDD; WDT enabled/disabled as specified.

b) For standby current measurements, the conditions are the same, except that the device is in SLEEP mode. The power-down current in SLEEP mode does not depend on the oscillator type.

3: Does not include current through REXT. The current through the resistor can be estimated by the formula: IR = VDD/2REXT (mA) with REXT in kΩ.

 © 2002 Microchip Technology Inc.

SONY EXHIBIT 1005 – 0568

US Patent Number:5,946,343 Issued to Schotz

Item Number 15: DSSS Transmitter, CYLINK SSTX

NO DATASHEET

SONY EXHIBIT 1005 – 0569

US Patent Number:5,946,343 Issued to Schotz

Item Number 16: DSSS Receiver, CYLINK Part# SPECTRE

NO DATASHEET

SONY EXHIBIT 1005 – 0570

US Patent Number:5,946,343 Issued to Schotz

Item Number 17: Mixer, IAM81008

NO DATASHEET

SONY EXHIBIT 1005 – 0571

US Patent Number:5,946,343 Issued to Schotz

Item Number 18: Channel Encoder/Decoder, SRT241203

NO DATASHEET

SONY EXHIBIT 1005 – 0572

US Patent Number:5,946,343 Issued to Schotz

Item Number 19: Interleaver/De-interleaver, SRT-24INT

NO DATASHEET

SONY EXHIBIT 1005 – 0573

US Patent Number:5,946,343 Issued to Schotz

Item Number 20: Optical Digital Receiver, HK-3131-01

NO DATASHEET

SONY EXHIBIT 1005 – 0574

US Patent Number:5,946,343 Issued to Schotz

Item Number 21: Optical Digital Transmitter, HK-3131-03

NO DATASHEET

SONY EXHIBIT 1005 – 0575

US Patent Number:5,946,343 Issued to Schotz

Item Number 22: Voltage Controlled Oscillator, M2 D300

NO DATASHEET

SONY EXHIBIT 1005 – 0576

EXHIBIT C

NOTE : A=Altstatt S=Schotz FHSS=Frequency Hopping Spread Spectrum w=with Tx=transmitter

System	Part	SupplyCurrent (in mA)	Size (in inches)	Playtime	Note
					Altstatt's Tx
A(Tx)	BA1404	3	18-pin 0.44 x 0.30		FM Stereo Transmitter
				16+ hours	Tx continuous operation time
S(Tx w SS)	DSP56002	90	144-pin 0.78 x 0.78		Schotz FHSS Tx
	>PLL	1	N/A		PLL located inside DSP56002
	>ckout	14	N/A		ckout located inside DSP56002
	SAA7360		44-pin 0.50 x 0.50		A/D converter
	>analog	43			function of the A/D converter
	>digital	50			function of the A/D converter
	SAA2520	82	44-pin 0.55 x 0.55		Stereo Filter MPEG
	SAA2521	25	44-pin 0.55 x 0.55		MPEG
	RF2422	45	16-pin 0.39 x 0.24		Modulator
	TQ9132	85	8-pin 0.19 x 0.23		Power Amp
	MC12210	10.2	16-pin 0.39 x 0.24		PLL
	SMV2500	19	12-pin 0.28 x 0.28		VCO
	HK-3131-01	no data	no data		Optical Digital Rcvr (*)
	M2 D300	no data	no data		VCO (*)
	SRT241203	no data	no data		FEC (*)
	SRT-24INT	no data	no data		Interleaver (*)
				0.1 hours or 6+ minutes	

A(Tx) equation in hours:

{(60x50mA-minutes)/[(60 minutes/hour x 24 hour/day)(3mA)]} x (24hour/day) = 16.6 hours

S(Tx w SS) equation in hours:

{(60x50mA-min.)/[(60 min./hrx24 hr/day)(90+1+14+43+50+82+25+45+85+10.2+19mA)]}x(24hr/day)=6.4min

where min = minutes and hr = hours

(*) = Unable to locate datasheet for integrated chip (IC) referenced by Schotz

SONY EXHIBIT 1005 – 0577

NOTE : A=Altstatt S=Schotz FHSS=Frequency Hopping Spread Spectrum w=with Rx=Receiver

System	Part	SupplyCurrent (in mA)	Size (in inches)	Playtime	Note
					Altstatt's Rx
A(Rx)	TA7792	4	16-pin 0.77 x 0.30		AM/FM Tuner System
	TA7766A	0.8	18-pin 0.44 x 0.30		FM PLL
				10+ hours	Rx continuous operation time
S(Rx w SS)	DSP56002	90	144-pin 0.78 x 0.78		Schotz FHSS Rx
	>PLL	1	N/A		PLL located inside DSP56002
	>ckout	14	N/A		ckout located inside DSP56002
	MGA86576	16	4-pin 0.20 x 0.07		LNA
	HK-3131-03	no data	no data		**Optical Digital Tx (*)**
	CS8402	1.5	28-pin 1.20 x 0.20		Digital Interface Tx
	SAA2520	82	44-pin 0.55 x 0.55		Stereo Filter MPEG
	TDA1305T	42	28-pin 0.70 x 0.40		DAC
	TRU-050	63	16-pin 0.80 x 0.30		Clock Recovery and Timing
	RF2703	10	14-pin 0.34 x 0.24		Demodulator
	MC12210	10.2	16-pin 0.39 x 0.24		PLL
	SMV2500	19	12-pin 0.28 x 0.28		VCO
	SRT241203	no data	no data		**FEC (*)**
	SRT-24INT	no data	no data		**De-interleaver (*)**
	IAM81008	no data	no data		**Mixer (*)**
				0.14 hours or 8+ minutes	

A(Rx) equation in hours:

{(60x50mA-minutes)/[(60 minutes/hour x 24 hour/day)(4.8mA)]} x (24hour/day)

S(Rx w SS) equation in hours:

{(60x50mA-minutes)/[(60 minutes/hour x 24 hour/day)(sum of IC currents in mA)]} x (24hour/day)

(*) = Unable to locate datasheet for integrated chip (IC) referenced by Schotz

SONY EXHIBIT 1005 – 0578

NOTE : A=Altstatt S=Schotz DSSS=Direct Sequence Spread Spectrum w=with Tx=transmitter

System	Part	SupplyCurrent (in mA)	Size (in inches)	Playtime	Note
					Altstatt's Tx
A(Tx)	BA1404	3	18-pin 0.44 x 0.30		FM Stereo Transmitter
				16+ hours	Tx continuous operation time
S(Tx w SS)	DSP56002	90	144-pin 0.78 x 0.78		Schotz DSSS Tx
	>PLL	1	N/A		PLL located inside DSP56002
	>ckout	14	N/A		ckout located inside DSP56002
	PIC16C55	1.8	28-pin 1.5 x 0.50		Microprocessor
	SAA7360		44-pin 0.50 x 0.50		A/D converter
	>analog	43			function of the A/D converter
	>digital	50			function of the A/D converter
	RF2422	45	16-pin 0.39 x 0.24		Modulator
	MC12210	10.2	16-pin 0.39 x 0.24		PLL
	SMV2500	19	12-pin 0.28 x 0.28		VCO
	CYLINK SSTS	no data	no data		**DSSS Transmitter (*)**
	HK-3131-01	no data	no data		**Optical Digital Rcvr (*)**
	M2 D300	no data	no data		**VCO (*)**
				0.18 hours or 11 minutes	

A(Tx) equation in hours:

{(60x50mA-minutes)/[(60 minutes/hour x 24 hour/day)(3mA)]} x (24hour/day)

S(Tx w SS) equation in hours:

{(60x50mA-minutes)/[(60 minutes/hour x 24 hour/day)(sum of IC currents in mA)]} x (24hour/day)

(*) = Unable to locate datasheet for integrated chip (IC) referenced by Schotz

SONY EXHIBIT 1005 – 0579

NOTE : A=Altstatt S=Schotz DSSS=Direct Sequence Spread Spectrum w=with Rx=Receiver

System	Part	SupplyCurrent (in mA)	Size (in inches)	Playtime	Note
					Altstatt's Rx
A(Rx)	TA7792	4	16-pin 0.77 x 0.30		AM/FM Tuner System
	TA7766A	0.8	18-pin 0.44 x 0.30		FM PLL
				10+ hours	Rx continuous operation time
S(Rx w SS)	DSP56002	90	144-pin 0.78 x 0.78		Schotz DSSS Rx
	>PLL	1	N/A		PLL located inside DSP56002
	>ckout	14	N/A		ckout located inside DSP56002
	PIC16C55	1.8	28-pin 1.5 x 0.50		Microprocessor
	CYLINK	no data	no data		DSSS Receiver
	MGA86576	16	4-pin 0.20 x 0.07		LNA
	IAM81008	no data	no data		**Mixer (*)**
	CS8402	1.5	28-pin 1.20 x 0.20		Digital Interface Tx
	TDA1305T	42	28-pin 0.70 x 0.40		DAC
	MC12210	10.2	16-pin 0.39 x 0.24		PLL
	SMV2500	19	12-pin 0.28 x 0.28		VCO
	HK-3131-03	no data	no data		**Optical Digital Tx (*)**
				0.25 hours or 15 minutes	

A(Rx) equation in hours:

{(60x50mA-minutes)/[(60 minutes/hour x 24 hour/day)(4.8mA)]} x (24hour/day)

S(Rx w SS) equation in hours:

{(60x50mA-minutes)/[(60 minutes/hour x 24 hour/day)(sum of IC currents in mA)]} x (24hour/day)

(*) = Unable to locate datasheet for integrated chip (IC) referenced by Schotz

SONY EXHIBIT 1005 – 0580

EXHIBIT D

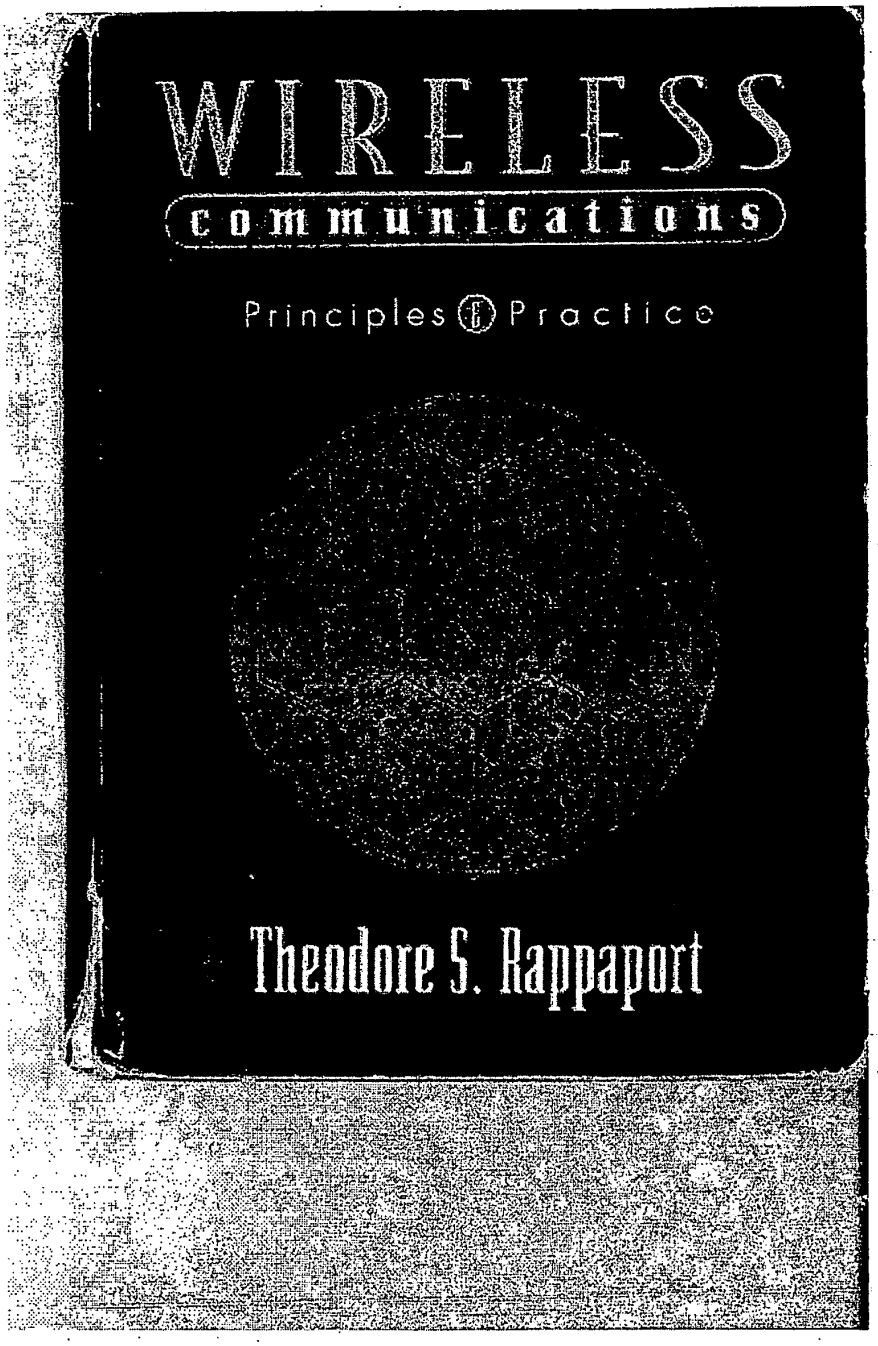

SONY EXHIBIT 1005 – 0581

microcellular systems. However, satellite mobile systems offer tremendous promise for paging, data collection, and emergency communications, as well as for global roaming before IMT-2000 is deployed. In early 1990, the aerospace industry demonstrated the first successful launch of a small satellite on a rocket from a jet aircraft. This launch technique is more than an order of magnitude less expensive than conventional ground-based launches and can be deployed quickly, suggesting that a network of LEOs could be rapidly deployed for wireless communications around the globe. Already, several companies have proposed systems and service concepts for worldwide paging, cellular telephone, and emergency navigation and notification [IEE91].

In emerging nations, where existing telephone service is almost nonexistent, fixed cellular telephone systems are being installed at a rapid rate. This is due to the fact that developing nations are finding it is quicker and more affordable to install cellular telephone systems for fixed home use, rather than install wires in neighborhoods which have not yet received telephone connections to the PSTN.

The world is now in the early stages of a major telecommunications revolution that will provide ubiquitous communication access to citizens, wherever they are [Kuc91], [Goo91], [ITU94]. This new field requires engineers who can design and develop new wireless systems, make meaningful comparisons of competing systems, and understand the engineering trade-offs that must be made in any system. Such understanding can only be achieved by mastering the fundamental technical concepts of wireless personal communications. These concepts are the subject of the remaining chapters of this text.

1.6 Problems

1.1 Why do paging systems need to provide low data rates? How does a low data rate lead to better coverage?

1.2 Qualitatively describe how the power supply requirements differ between mobile and portable cellular phones, as well as the difference between pocket pagers and cordless phones. How does coverage range impact battery life in a mobile radio system?

1.3 In simulcasting paging systems, there usually is one dominant signal arriving at the paging receiver. In most, but not all cases, the dominant signal arrives from the transmitter closest to the paging receiver. Explain how the FM capture effect could help reception of the paging receiver. Could the FM capture effect help cellular radio systems? Explain how.

1.4 Where would walkie-talkies fit in Tables 1.5 and 1.6? Carefully describe the similarities and differences between walkie-talkies and cordless telephones. Why would consumers expect a much higher grade of service for a cordless telephone system?

1.5 Assume a 1 Amp-hour battery is used on a cellular telephone (often called a cellular subscriber unit). Also assume that the phone's radio receiver draws 35 mA on receive and 250 mA during a call. How long would the phone work (i.e. what is the battery life) if the user has one 3-minute call every day? every 6

SONY EXHIBIT 1005 – 0582

hours? every hour? What is the maximum talk time available on the cellular phone in this example?

1.6 Assume a CT2 subscriber unit has the same size battery as the phone in Problem 1.5, but the paging receiver draws 5 mA and the transmitter draws 80 mA during a call. Recompute the battery life for the cases in Problem 1.5. Recompute the maximum talk time for the CT2 handset.

1.7 Why would one expect the CT2 handset in Problem 1.6 to have a smaller battery drain during transmission than a cellular telephone?

1.8 Why is FM, rather than AM, used in most mobile radio systems today? List as many reasons as you can think of, and justify your responses. Consider issues such as fidelity, power consumption, and noise.

1.9 List the factors that led to the development of (a) the GSM system for Europe, and (b) the U.S. digital cellular system. How important was it for both efforts to (i) maintain compatibility with existing cellular phones? (ii) obtain spectral efficiency? (iii) obtain new radio spectrum?

1.10 Assume that a GSM, an IS-95, and a U.S. digital cellular base station transmit the same power over the same distance. Which system will provide the best SNR at a mobile receiver? How much is the improvement over the other two systems? Assume a perfect receiver with only thermal noise is used for each of the three systems.

1.11 Discuss the similarities and difference between a conventional cellular radio system and a space-based cellular radio system. What are the advantages and disadvantages of each system? Which system could support a larger number of users for a given frequency allocation? How would this impact the cost of service for each subscriber?

1.12 Assume that wireless communication services can be classified as belonging to one of the following four groups:

High power, wide area systems (cellular)
Low power, local area systems (cordless telephone and PCS)
Low speed, wide area systems (mobile data)
High speed, local area systems (wireless LANs)

Classify each of the wireless systems described in Chapter 1 using these four groups. Justify your answers. Note that some systems may fit into more than one group.

1.13 Discuss the importance of regional and international standards organizations such as ITU-R, ETSI, and WARC. What competitive advantages are there in using different wireless standards in different parts of the world? What disadvantages arise when different standards and different frequencies are used in different parts of the world?

1.14 Based on the proliferation of wireless standards throughout the world, discuss how likely it is for IMT-2000 to be adopted. Provide a detailed explanation, along with probable scenarios of services, spectrum allocations, and cost.

SONY EXHIBIT 1005 – 0583

Solutions Manual to Accompany

Wireless Communications
Principles and Practices

FIRST EDITION

Zhigang Rong

Theodore S. Rappaport

Prentice Hall PTR
Upper Saddle River, New Jersey 07458

SONY EXHIBIT 1005 – 0584

Cont'd

infrastructure, complexity, hardware cost are all low.

A cordless telephone, on the ther hand, is a full duplex system. It allows simul- neous two-way communication. Transmission and reception s on two different channels (FDD) although new cord- ss system are using TDD. The coverage range, required nfrastructure, hardware cost of a cordless phone system are w and the complexity is moderate. User expectations are reater for a cordless telephone.

1.5 If the user has one 3-minute call every day

the battery life $= \frac{60\times1000 \text{ (mA-minute)}}{(60\times24-3)\times35 + 3\times250 \text{ (mA-minute)}}$

$\doteq 1.175$ days $\doteq$ 28.2 hours

If the user has one 3-minute call every 6 hours

the battery life $= \frac{60\times1000}{(6\times6-3)\times35+3\times250} \times 6 \doteq$ 27.18 hours

If the user has one 3-minute call every hour.

the battery life $= \frac{60\times1000}{(6-3)\times35+3\times250} \doteq$ 21.86 hours

the maximum talk time $= \frac{60\times1000}{250} = 240$ minutes $=$ 4 hours

1.6 For 3-minute call/day

battery life $= \frac{60\times1000 \text{ (mA-minute)}}{(60\times24-3)\times5+3\times80} \doteq 8.08$ days $=$ 193.94 hours

1.6 Cont'd

For 3 minute-call/6 hours,

battery life $= \frac{60\times1000}{(60\times6-3)\times5+3\times80} \times 6 \doteq$ 177.78 hours

For 3 minute-call/hour,

battery life $= \frac{60\times1000}{(60-3)\times5+3\times80} \doteq$ 114.29 hours

The maximum talk time $= \frac{60\times1000}{80} = 750$ minutes $=$ 12.5 hours

1.7 Since the coverage range of the CT-2 system is lower than that of the cellular radio system, to obtain the same signal-to-noise ratio in the coverage area, a CT-2 handset requires less transmitted power than a cellular telephone, and thus a smaller battery drain.

1.8 FM has several advantages over AM. The most important advantage is FM's superior noise suppression characteristics. With Conventional AM, the modulating signal is impressed onto the carrier in the form of amplitude variations. However, noise introduced into the system also produces changes in the amplitude of the envelope. Therefore, the noise cannot be removed from the composite waveform without also removing a portion of the information signal. With FM, the information is impressed onto the carrier in the form of frequency variations. Therefore, with FM receivers,

SONY EXHIBIT 1005 – 0585

SPREAD SPECTRUM SYSTEMS

WITH

COMMERCIAL APPLICATIONS

THIRD EDITION

ROBERT C. DIXON

SONY EXHIBIT 1005 – 0586

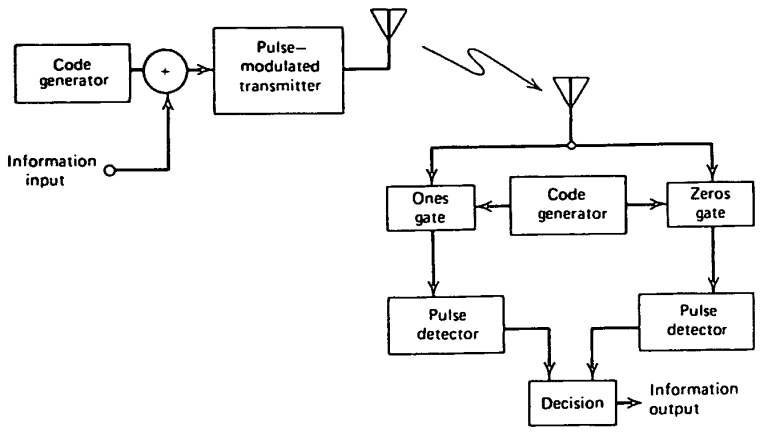

Figure 2.23 Simple time-hopping (pseudorandom pulse) system.

time-frequency hopping system might change frequency and/or amplitude only at one/zero transitions in the code sequence. Figure 2.23 shows a time-hopping system in block form. The simplicity of the modulator is obvious. Any pulse-modulatable signal source capable of following code waveforms is eligible as a time-hopping modulator.

Time hopping may be used to aid in reducing interference between systems in time-division multiplexing. However, stringent timing requirements must be placed on the overall system to ensure minimum overlap between transmitters. Also, as in any other coded communications system, the codes must be considered carefully from the standpoint of their cross-correlation properties.

Simple time-hopping modulation offers little in the way of interference rejection because a continuous carrier at the signal center frequency can block communications effectively. The primary advantage offered is in the reduced duty cycle; that is, to be really effective an interfering transmitter would be forced to transmit continuously (assuming the coding used by the time-hopper is unknown to the interferer). The power required of the reduced-duty-cycle time-hopper would be less than that of the interfering transmitter by a factor equal to the signal duty cycle.

Because of this relative vulnerability to interference, simple time-hopping transmissions should not be used for antijamming unless combined with frequency hopping to prevent single frequency interferers from causing significant losses. For ranging, multiple access, or other special uses time-hopping may be especially useful, if only because of the simplicity of generating the transmitted signal.

SONY EXHIBIT 1005 – 0587

Electronic, Electrical and Computer Engineering

UNIVERSITY OF
BIRMINGHAM

3rd month report

Optical CDMA Networks

M. Massoud Karbassian

SONY EXHIBIT 1005 – 0588

1. Introduction

The process of optical to electrical and vice versa conversion in fibre-optic-based optical networks for signal processing limits how much fibre bandwidth can be used because of the limited speed of electronic signal processors. It is believed that optical components, once fully developed and integrated, will offer much higher speeds for optical signal processing than electrical one. Therefore, a desirable feature of optical communications systems would be the ability to perform signal processing functions optically only when desired. Fibre optic CDMA takes advantages of excess bandwidth in single mode fibres to map the low information rate of electrical or optical data into high rate optical pulse sequences followed by a laser beam to obtain random, asynchronous communications access free of network control among many users. (Fig.1)

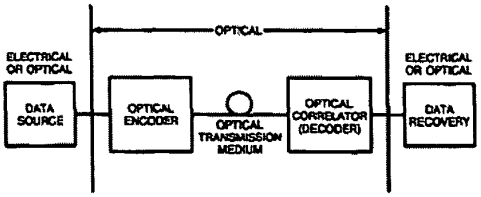

OCDMA signals would be compared at the receivers to a stored copy of itself (correlation process and characteristic of spread spectrum communications) and to a threshold level at the comparator for the data recovery. (Fig.1)

Figure 1. *Fibre optic communications system using optical codec*

Actually in such a system, there are N transmitters and receivers pairs as users that the set of OCDMA pulse sequences essentially become a set of address codes or signature sequences for the network which is shown in Figure 2.

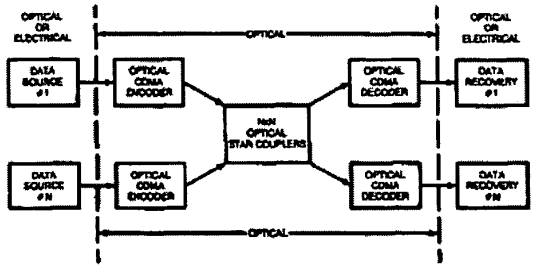

Figure 2. *Schematic diagram of an OCDMA communications system*

The theoretical available bandwidth in a standard single-mode optical fibre invites us to use it in an advantageous manner to the full usage of such great capacity. For local area networks we can use Time-Division Multiple-Access (TDMA) but we are limited to a few Gbps by the speed of current electro-optic technology and we need an exact synchronization between the

SONY EXHIBIT 1005 – 0589

users. Wavelength-Division Multiple-Access (WDMA) would be our next choice but technology again cannot help us avoid the limitations of tuneable optical receivers, which provide us just about an hundred different wavelengths. Although we can combine TDMA and WDMA to get greater speed and flexibility, we really get a great deal of advantage when using Optical Asynchronous Code-Division Multiple-Access (OACDMA) because we eliminate all these problems and others, like channel allocation, channel degradation, security, fixed bit-rate. With all this in mind we can undoubtedly consider OCDMA as a communication system which deserves our attention for present research.

2. Aims and Objectives

Based on the mentioned motivations and because CDMA coding scheme has already been applied into practical radio networks like Mobile Communication (3G) or Global Positioning System (GPS), also deploying CDMA coding in optical channel and making benefit of huge bandwidth with as less as possible *interference* would be the main aims of the project.

There are various types of interferences such as channel noise, thermal noise, users simultaneous access to the network, etc. therefore in order to provide a secure and reliable communication having a clear system performance in an acceptable standard specially dealing with Multi-User Interference (MUI) reduction based on our design or code selection and application would be the main task.

Objectives of the project principally could be pointed as following:

- Grasp CDMA method as multiple access
- Applying CDMA in Optical Communications Networks (OCDMA)
- Introduce novel system feature based on using alternative schemes than previously used
- Improving the system performance:
    - Focused on MUI Suppression
    - Noise Reduction

SONY EXHIBIT 1005 – 0590

3. Literature Survey

3.1. Spread Spectrum Communications

Spread spectrum (SS) communications systems have the characteristic attributes that the needed transmission bandwidth is much greater than the baseband message signal bandwidth and that the transmission bandwidth is determined by a spreading signal that is independent of the message. Furthermore, the receiver will recover the signal by applying the same spreading code which was in transmitted signal. The main advantage of such a system is interference rejection both intentional and unintentional one. In addition to interference rejection, spread spectrum system offers secure communication (hard to intercept), multi-user random access and high resolution ranging. So by definition a transmission technique in which a pseudo-noise code independent of the information is employed as a modulation waveform to *'spread'* the signal energy over a bandwidth much greater than the signal information bandwidth then at the receiver the signal *'despread'* using a synchronised replica of the pseudo-noise random code (Fig.3). Two main spread spectrum topologies of all are discussed in the following:

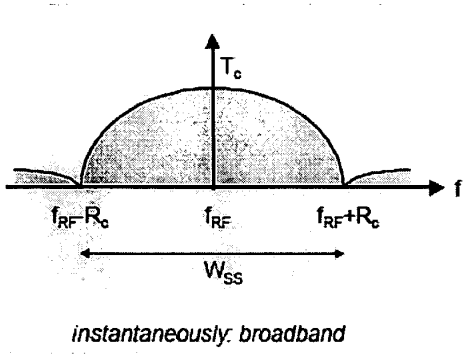

Figure 3. *Message signal energy spread on bandwidth (DSSS)*

3.1.1. Direct Sequence Spread Spectrum (DSSS)

A pseudo-noise (PN) sequence pn_t generated at the modulator is used in conjunction with an *M-array PSK* modulation to shift the phase of the *PSK* signal pseudo-randomly at the chipping rate R_c $(=1/T_c)$ that is an integer multiple of the symbol rate Rs $(=1/Ts)$ (Fig.4). The transmitted bandwidth is determined by the chip rate and by the baseband filtering. The implementation limits the maximum chip rate R_c (clock rate) and thus the maximum spreading. The *PSK* modulation scheme requires a coherent demodulation. A short-code system uses a PN code

SONY EXHIBIT 1005 – 0591

length equal to a data symbol, while a long-code system uses a PN code length that is much longer than a data symbol, so that a different chip pattern is associated with each symbol. (Fig.5)

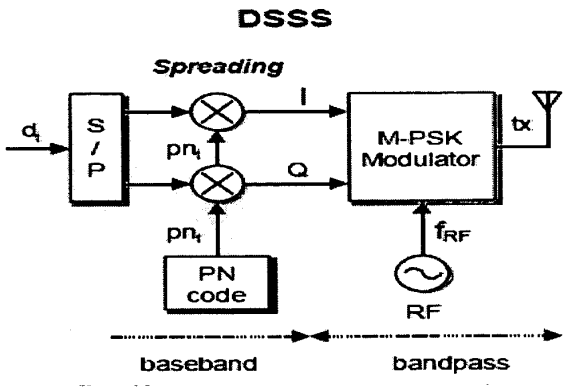

Figure 4. DSSS system concept

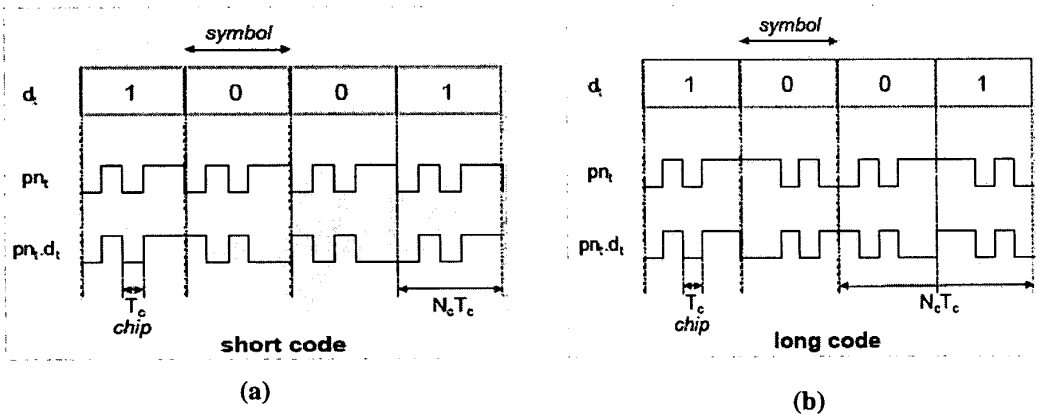

Figure 5. DSSS –a) Short-Code –b) Long-Code systems

3.1.2. Frequency Hopping Spread Spectrum (FHSS)

A pseudo-noise (PN) sequence pn_t generated at the modulator is used in conjunction with an *M-array FSK* modulation to shift the carrier frequency of the *FSK* signal pseudo-randomly, at the hopping rate T_h $(=1/R_h)$ referred to as dwell time. FHSS divides the available bandwidth into N channels and hops between these channels according to PN sequence. At each frequency hop-time the PN generator feeds the frequency synchroniser a frequency word FW (a sequence of n chips) which dictates one of 2^n frequency positions f_{hi}. Transmitter and receiver follow the same frequency hop pattern. (Fig.6)

SONY EXHIBIT 1005 – 0592

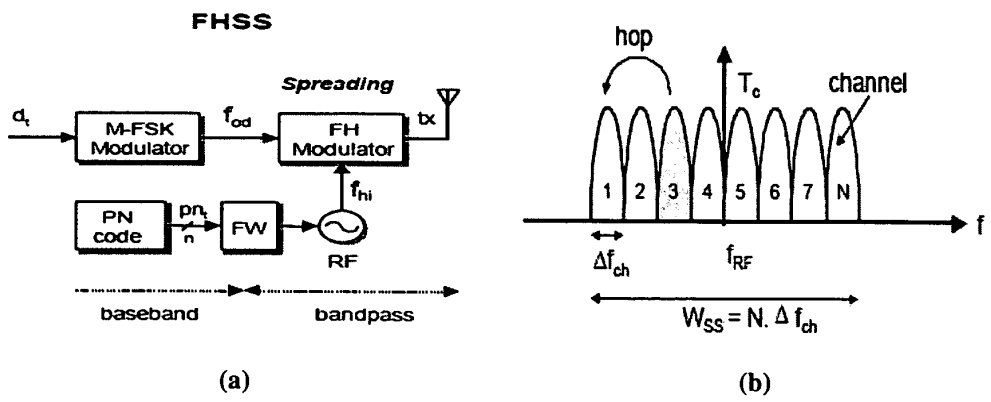

Figure 6. FHSS –a) System concept –b) Frequency hopping during the bandwidth

The transmitted bandwidth is determined by the lowest and highest hop positions and by the bandwidth per hop position (Δf_{ch}). For a given hop, the instantaneous occupied bandwidth is identical to bandwidth of conventional *M-FSK*, which is typically much smaller than W_{ss}. So the FHSS signal is a narrowband signal, all transmission power is concentrated on one channel. Averaged over many hops, the *FH/M-FSK* spectrum occupies the entire spread spectrum bandwidth. Because the bandwidth of a FHSS system only depends on the tuning range, it can be hopped over a much wider bandwidth than a DSSS system.

Since the hops generally result in phase-discontinuity (depending on the particular implementation) a non-coherent demodulation is done at the receiver, while with slow hopping there are multiple data symbols per hop and with fast hopping there are multiple hops per data symbol.(Fig.7)

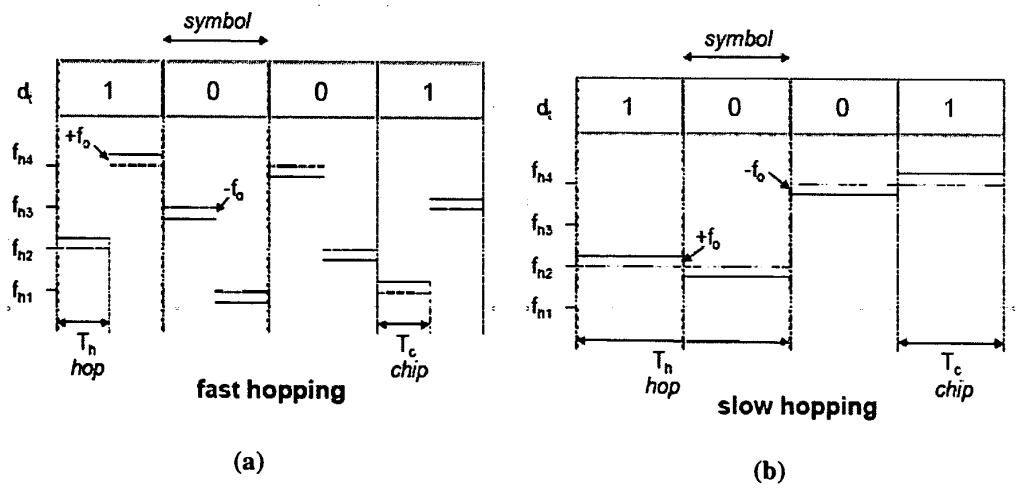

Figure 7. FHSS –a) Fast hopping –b) Slow hopping

SONY EXHIBIT 1005 – 0593

3.2. Multiple Access Systems

Code Division Multiple Access (CDMA) is a method of (wirelessly) multiplexing users by distinct (orthogonal) codes. All users can transmit at the same time, and each is allocated the entire available frequency spectrum for transmission. CDMA is also known as spread spectrum multiple access (SSMA). CDMA require neither the bandwidth allocation of FDMA nor the time synchronisation of the individual users needed in TDMA. A CDMA user has full time and full bandwidth available, but the quality of the communication decreases with the number of users (BER increases).

As it can be seen from the Figure 8, each user has its own PN code, uses the same RF bandwidth and transmits simultaneously (synchronous or asynchronous).

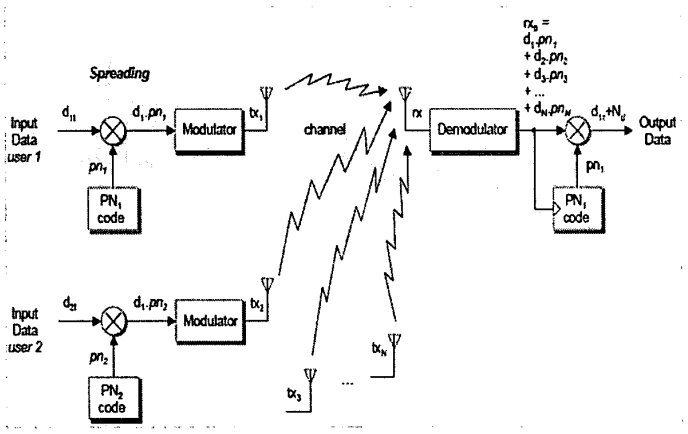

Figure 8. CDMA Network Concept

Correlation of the received baseband spread spectrum signal rx_b with the PN sequence of user1 only despread the signal of user1. The other users produce noise N_u for user1. (Fig.9)

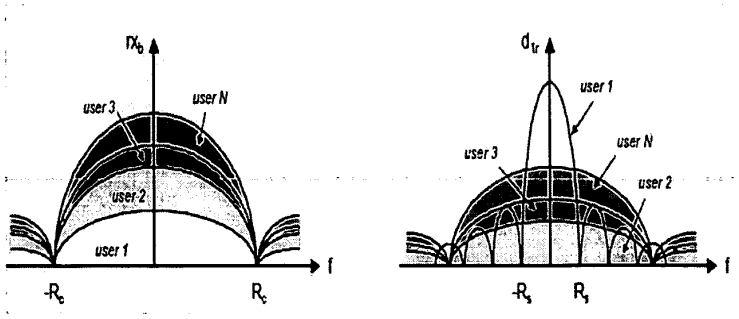

Figure 9. Power distribution on the spectrum and despreading user1

SONY EXHIBIT 1005 – 0594

3.3. Codes

In OCDMA systems with incoherent signal processing we are obliged to use signature sequences composed of only zeros and ones. Bi-polar codes used currently on radio networks are infeasible so we need to devise a new kind of codes which satisfy this requirement and the acceptable cross and auto correlation conditions. Optical orthogonal codes (OOC) is a family of unipolar (0,1) sequences characterised by a quadruple (n, ω, λ_a, λ_c) where n denotes the sequence length , ω its weight (the number of 1s) then λ_a and λ_c the maximum value of the out-of-phase auto and cross correlation respectively. OOCs are closely related to constant-weight error correcting codes and difference sets.

At the same time we can focus our attention on prime sequences (PC), extended prime sequences (EPC) and their performance improvements against OOC.

Another level of complexity and performance improvement can be achieved when using Turbo Codes (TC) and their performance evaluation on OCDMA systems, since this is a relatively new technology, some new studies of TC applied to OCDMA are worthwhile to study as well.

A field of research is also estimation of interference at the receiver. It has been shown that the system performance increases dramatically when using chip-level detection and/or blind detection. Chip-level detection system performance when using both *PPM* and *OOK* regarding MUI with receiver shot noise, blind detection and interference suppression Avalanche Photo Detector (APD) receivers and interference estimation used to choose an optimum decision threshold level.

4. Task and Time Management

4.1. First Step

Last three months have been successfully dedicated to study the fundamental and very essential materials. As an achievement, I have fully understood:

- Spread Spectrum Communications: focused on two main methods of signal spreading DSSS and FHSS
- Digital Modulations: various signal and pulse modulations, applications and properties
- Source and Channel Coding: different codes and objectives
- CDMA: system concepts and structures as a multiple-access protocol

SONY EXHIBIT 1005 – 0595

4.2. Second Step

For next 6 months, I still need a lot more details about CDMA and coding so I have to expand my knowledge in this field especially to implement the software simulation using MATLAB to understand well enough the coding features, modulation and spreading methods altogether. Finally well-developed selections of the methods from each part for the project would be considered. Furthermore, I am going to complete the initial studying of the fundamentals of optical field of research as soon as possible such as:

- Optical Sources and Transmitters
- Optical Fibre as a Channel
- Optical Detectors and Receivers
- Noise in Optical Devices and Systems

Finally at the end of 9 months, I would experiment most of the main concepts of OCDMA and face a new overview. Figure 10 illustrates time and task management progress graphically.

5. Conclusion

To sum up, as tracked in this report the project is in under well control and follows the plan as expected and more importantly a strong foundation of literature has been built. During the few months later, computational and simulation concepts will be implemented and can be realised where the project goes by the hope that a chance of novelty will also be achieved.

SONY EXHIBIT 1005 – 0596

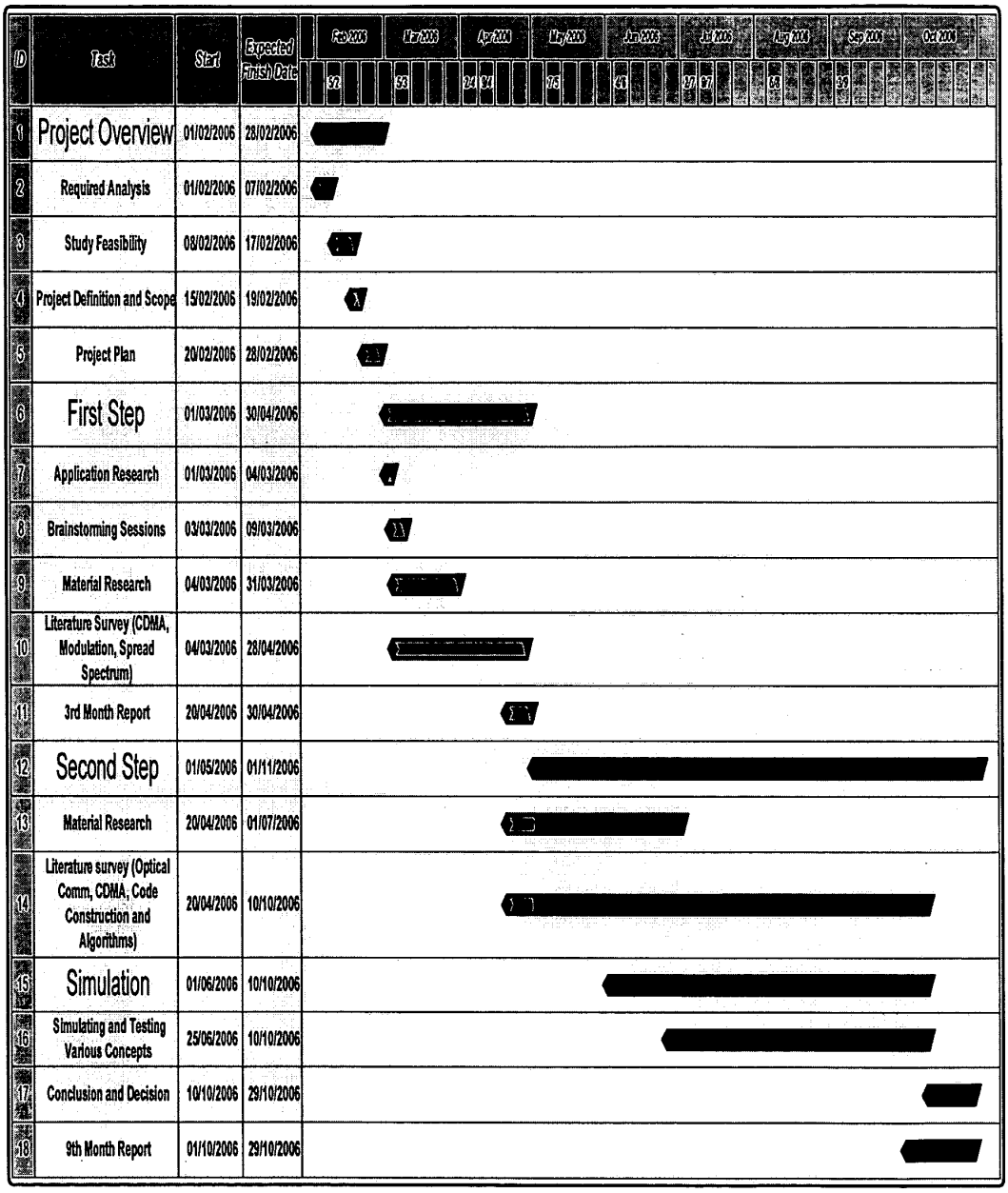

ID	Task	Start	Expected Finish Date
1	Project Overview	01/02/2006	28/02/2006
2	Required Analysis	01/02/2006	07/02/2006
3	Study Feasibility	08/02/2006	17/02/2006
4	Project Definition and Scope	15/02/2006	19/02/2006
5	Project Plan	20/02/2006	28/02/2006
6	First Step	01/03/2006	30/04/2006
7	Application Research	01/03/2006	04/03/2006
8	Brainstorming Sessions	03/03/2006	09/03/2006
9	Material Research	04/03/2006	31/03/2006
10	Literature Survey (CDMA, Modulation, Spread Spectrum)	04/03/2006	28/04/2006
11	3rd Month Report	20/04/2006	30/04/2006
12	Second Step	01/05/2006	01/11/2006
13	Material Research	20/04/2006	01/07/2006
14	Literature survey (Optical Comm, CDMA, Code Construction and Algorithms)	20/04/2006	10/10/2006
15	Simulation	01/06/2006	10/10/2006
16	Simulating and Testing Various Concepts	25/06/2006	10/10/2006
17	Conclusion and Decision	10/10/2006	29/10/2006
18	9th Month Report	01/10/2006	29/10/2006

Figure 10. Project Planning

SONY EXHIBIT 1005 – 0597

Bibliography

1. John G. Proakis, "*Digital Communications*", McGraw Hill 1995
2. Ir. J. Meel, "*Spread Spectrum – Introduction and Application*", Sirius Communication, 1999
3. R.C.V Macario, "*Personal & Mobile Radio Systems*", Peter Peregrinus Ltd., 1991
4. J.E. Flood, "*Angle Modulation: The Theory of System Assessment*", IEE Telecommunications Series 5, Peter Peregrinus Ltd. 1977
5. Samuel C. Yang, "*CDMA, RF System Engineering*", Artech House Inc. 1998
6. Jerry D. Gibson, "*Principles of Digital & Analog Communications*", Maxwell Macmillan Publishing Company 1993
7. Simon Haykin, "*Communication Systems*", John Wiley & Sons Inc. 1994
8. Martin S. Roden, "*Analog and Digital Communication Systems*", Prentice-Hall Inc. 1996
9. John G. Proakis, Masoud Salehi, "*Communication Systems Engineering*", Prentice-Hall 1994
10. Robert C. Dixon, "*Spread Spectrum Systems with Commercial Applications*", 3rd Edition John Wiley & Sons Inc.1994
11. George R. Cooper and Clare D. McGillem, "*Modern Communications and Spread Spectrum*", McGraw Hill 1986
12. A. P. Clark, "*Principle of Digital Data Transmission*", Pentech press 1983
13. Ramjee Prasad, "*CDMA for Wireless Personal Communications*", Artech House Publisher, 1996
14. Andrew J. Viterbi, "*CDMA, Principles of Spread Spectrum Communication*", Addison Wesley Publishing Company 1995
15. Jawad.A.Salehi, "*Code division multiple-access techniques in optical fibre networks - part I: Fundamental principles*" IEEE Transactions on Communications, vol. 37, pp. 824-833, Aug. 1989.
16. Jawad.A.Salehi and C. A. Brackett,"*Code division multiple-access techniques in optical fibre networks - part II: Systems performance analysis*," IEEE Transactions on Communications, vol. 37, pp. 834-842, Aug. 1989.
17. H. Chung and P. Kumar, "*Optical orthogonal codes - new bounds and an optimal construction*," IEEE Transactions on Information theory, vol. 36, pp. 866-873, July 1990
18. S. V. Maric, "*New family of algebraically designed optical orthogonal codes for use in cdma fiber-optic networks*" Electronics Letters, vol. 29, pp. 538-539, Feb./Mar./Apr. 1993
19. Jawad.A.Salehi, F. R. K. Chung, and V. K. Wei, "*Optical orthogonal codes: Design, analysis, and applications*", IEEE Transactions on Information theory, vol. 35, pp. 595-605, May 1989
20. G.-C. Yang and Wing.C.Kwong, "*Performance analysis of optical cdma with prime codes*", *Electronics Letters*, vol. 31, pp. 569-570, Mar. 1995

SONY EXHIBIT 1005 – 0598

This Page is Inserted by IFW Indexing and Scanning Operations and is not part of the Official Record

BEST AVAILABLE IMAGES

Defective images within this document are accurate representations of the original documents submitted by the applicant.

Defects in the images include but are not limited to the items checked:

- ☐ BLACK BORDERS
- ☐ IMAGE CUT OFF AT TOP, BOTTOM OR SIDES
- ☐ FADED TEXT OR DRAWING
- ☐ BLURRED OR ILLEGIBLE TEXT OR DRAWING
- ☐ SKEWED/SLANTED IMAGES
- ☑ COLOR OR BLACK AND WHITE PHOTOGRAPHS
- ☐ GRAY SCALE DOCUMENTS
- ☐ LINES OR MARKS ON ORIGINAL DOCUMENT
- ☐ REFERENCE(S) OR EXHIBIT(S) SUBMITTED ARE POOR QUALITY
- ☐ OTHER: _____

IMAGES ARE BEST AVAILABLE COPY.
As rescanning these documents will not correct the image problems checked, please do not report these problems to the IFW Image Problem Mailbox.

11-30-06

AF
JPW

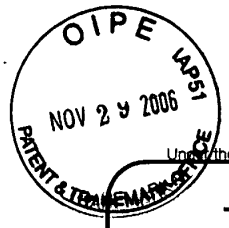

PTO/SB/21 (07-06)
Approved for use through 09/30/2006. OMB 0651-0031
U.S. Patent and Trademark Office; U.S. DEPARTMENT OF COMMERCE
Under the Paperwork Reduction Act of 1995, no persons are required to respond to a collection of information unless it displays a valid OMB control number.

TRANSMITTAL FORM

(to be used for all correspondence after initial filing)

Total Number of Pages in This Submission

Application Number	10/648,012
Filing Date	08/26/2003
First Named Inventor	Woolfork, C. Earl
Art Unit	2615
Examiner Name	Flanders, Andrew C.
Attorney Docket Number	W003-4000

ENCLOSURES *(Check all that apply)*

- ☐ Fee Transmittal Form
  - ☐ Fee Attached
- ☑ Amendment/Reply
  - ☑ After Final
  - ☑ Affidavits/declaration(s)
- ☐ Extension of Time Request
- ☐ Express Abandonment Request
- ☐ Information Disclosure Statement
- ☐ Certified Copy of Priority Document(s)
- ☐ Reply to Missing Parts/ Incomplete Application
  - ☐ Reply to Missing Parts under 37 CFR 1.52 or 1.53
- ☐ Drawing(s)
- ☐ Licensing-related Papers
- ☐ Petition
- ☐ Petition to Convert to a Provisional Application
- ☐ Power of Attorney, Revocation Change of Correspondence Address
- ☐ Terminal Disclaimer
- ☐ Request for Refund
- ☐ CD, Number of CD(s) _____
  - ☐ Landscape Table on CD
- ☐ After Allowance Communication to TC
- ☐ Appeal Communication to Board of Appeals and Interferences
- ☐ Appeal Communication to TC **(Appeal Notice, Brief, Reply Brief)**
- ☐ Proprietary Information
- ☐ Status Letter
- ☐ Other Enclosure(s) (please Identify below):

Remarks

EXPRESS MAIL LABEL NO.: EB 069229393 US

SIGNATURE OF APPLICANT, ATTORNEY, OR AGENT

Firm Name	The Patel Law Firm, P.C.		
Signature	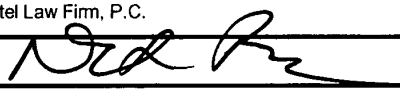		
Printed name	Natu J. Patel		
Date	11/29/06	Reg. No.	39,559

CERTIFICATE OF TRANSMISSION/MAILING

I hereby certify that this correspondence is being facsimile transmitted to the USPTO or deposited with the United States Postal Service with sufficient postage as first class mail in an envelope addressed to: Commissioner for Patents, P.O. Box 1450, Alexandria, VA 22313-1450 on the date shown below:

Signature	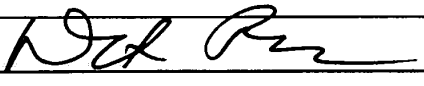		
Typed or printed name	Natu J. Patel	Date	11/29/06

This collection of information is required by 37 CFR 1.5. The information is required to obtain or retain a benefit by the public which is to file (and by the USPTO to process) an application. Confidentiality is governed by 35 U.S.C. 122 and 37 CFR 1.11 and1.14. This collection is estimated to 2 hours to complete, including gathering, preparing, and submitting the completed application form to the USPTO. Time will vary depending upon the individual case. Any comments on the amount of time you require to complete this form and/or suggestions for reducing this burden, should be sent to the Chief Information Officer, U.S. Patent and Trademark Office, U.S. Department of Commerce, P.O. Box 1450, Alexandria, VA 22313-1450. DO NOT SEND FEES OR COMPLETED FORMS TO THIS ADDRESS. **SEND TO: Commissioner for Patents, P.O. Box 1450, Alexandria, VA 22313-1450.**

If you need assistance in completing the form, call 1-800-PTO-9199 and select option 2.

CERTIFICATE OF EXPRESS MAIL

I hereby certify that this paper (along with any paper referred to as being attached or enclosed) is being deposited with the United States Postal Service on the date shown below with sufficient postage via EXPRESS MAIL in an envelope addressed as follows (**Express Mail Label No.: EB 069229393 US**):

Mail Stop AF
Commissioner for Patents
Post Office Box 1450
Alexandria, Virginia 22313-1450

11/29/06

Natu J. Patel, USPTO Reg. No. 39,559 — Date: November 29, 2006

PTO/SB/06 (07-06)
Approved for use through 1/31/2007. OMB 0651-0032
U.S. Patent and Trademark Office; U.S. DEPARTMENT OF COMMERCE
Under the Paperwork Reduction Act of 1995, no persons are required to respond to a collection of information unless it displays a valid OMB control number.

PATENT APPLICATION FEE DETERMINATION RECORD Substitute for Form PTO-875	Application or Docket Number 10/648,012	Filing Date 08/26/2003	☐ To be Mailed

APPLICATION AS FILED – PART I

	(Column 1)	(Column 2)	SMALL ENTITY ☒		OR	OTHER THAN SMALL ENTITY	
FOR	NUMBER FILED	NUMBER EXTRA	RATE ($)	FEE ($)		RATE ($)	FEE ($)
☐ BASIC FEE (37 CFR 1.16(a), (b), or (c))	N/A	N/A	N/A			N/A	
☐ SEARCH FEE (37 CFR 1.16(k), (i), or (m))	N/A	N/A	N/A			N/A	
☐ EXAMINATION FEE (37 CFR 1.16(o), (p), or (q))	N/A	N/A	N/A			N/A	
TOTAL CLAIMS (37 CFR 1.16(i))	minus 20 =	*	X $ =		OR	X $ =	
INDEPENDENT CLAIMS (37 CFR 1.16(h))	minus 3 =	*	X $ =			X $ =	
☐ APPLICATION SIZE FEE (37 CFR 1.16(s))	If the specification and drawings exceed 100 sheets of paper, the application size fee due is $250 ($125 for small entity) for each additional 50 sheets or fraction thereof. See 35 U.S.C. 41(a)(1)(G) and 37 CFR 1.16(s).						
☐ MULTIPLE DEPENDENT CLAIM PRESENT (37 CFR 1.16(j))							
* If the difference in column 1 is less than zero, enter "0" in column 2.			TOTAL			TOTAL	

APPLICATION AS AMENDED – PART II

AMENDMENT	11/29/2006	(Column 1) CLAIMS REMAINING AFTER AMENDMENT		(Column 2) HIGHEST NUMBER PREVIOUSLY PAID FOR	(Column 3) PRESENT EXTRA	SMALL ENTITY RATE ($)	ADDITIONAL FEE ($)	OR	OTHER THAN SMALL ENTITY RATE ($)	ADDITIONAL FEE ($)
	Total (37 CFR 1.16(i))	* 48	Minus	** 48	= 0	X $25 =	0	OR	X $ =	
	Independent (37 CFR 1.16(h))	* 19	Minus	***19	= 0	X $100 =	0	OR	X $ =	
	☐ Application Size Fee (37 CFR 1.16(s))									
	☐ FIRST PRESENTATION OF MULTIPLE DEPENDENT CLAIM (37 CFR 1.16(j))							OR		
						TOTAL ADD'L FEE	0	OR	TOTAL ADD'L FEE	

AMENDMENT		(Column 1) CLAIMS REMAINING AFTER AMENDMENT		(Column 2) HIGHEST NUMBER PREVIOUSLY PAID FOR	(Column 3) PRESENT EXTRA	RATE ($)	ADDITIONAL FEE ($)	OR	RATE ($)	ADDITIONAL FEE ($)
	Total (37 CFR 1.16(i))	*	Minus	**	=	X $ =		OR	X $ =	
	Independent (37 CFR 1.16(h))	*	Minus	***	=	X $ =		OR	X $ =	
	☐ Application Size Fee (37 CFR 1.16(s))									
	☐ FIRST PRESENTATION OF MULTIPLE DEPENDENT CLAIM (37 CFR 1.16(j))							OR		
						TOTAL ADD'L FEE		OR	TOTAL ADD'L FEE	

* If the entry in column 1 is less than the entry in column 2, write "0" in column 3.
** If the "Highest Number Previously Paid For" IN THIS SPACE is less than 20, enter "20".
*** If the "Highest Number Previously Paid For" IN THIS SPACE is less than 3, enter "3".
The "Highest Number Previously Paid For" (Total or Independent) is the highest number found in the appropriate box in column 1.

Legal Instrument Examiner:
carol barnes

This collection of information is required by 37 CFR 1.16. The information is required to obtain or retain a benefit by the public which is to file (and by the USPTO to process) an application. Confidentiality is governed by 35 U.S.C. 122 and 37 CFR 1.14. This collection is estimated to take 12 minutes to complete, including gathering, preparing, and submitting the completed application form to the USPTO. Time will vary depending upon the individual case. Any comments on the amount of time you require to complete this form and/or suggestions for reducing this burden, should be sent to the Chief Information Officer, U.S. Patent and Trademark Office, U.S. Department of Commerce, P.O. Box 1450, Alexandria, VA 22313-1450. DO NOT SEND FEES OR COMPLETED FORMS TO THIS ADDRESS. **SEND TO: Commissioner for Patents, P.O. Box 1450, Alexandria, VA 22313-1450.**

If you need assistance in completing the form, call 1-800-PTO-9199 and select option 2.

UNITED STATES PATENT AND TRADEMARK OFFICE

UNITED STATES DEPARTMENT OF COMMERCE
United States Patent and Trademark Office
Address: COMMISSIONER FOR PATENTS
P.O. Box 1450
Alexandria, Virginia 22313-1450
www.uspto.gov

APPLICATION NO.	FILING DATE	FIRST NAMED INVENTOR	ATTORNEY DOCKET NO.	CONFIRMATION NO.
10/648,012	08/26/2003	C. Earl Woolfork	W003-4000	3337

48162 7590 12/27/2006

THE PATEL LAW FIRM, P.C.
2532 DUPONT DRIVE
IRVINE, CA 92612

EXAMINER	
FLANDERS, ANDREW C	

ART UNIT	PAPER NUMBER
2615	

MAIL DATE	DELIVERY MODE
12/27/2006	PAPER

Please find below and/or attached an Office communication concerning this application or proceeding.

SONY EXHIBIT 1005 – 0603

Advisory Action Before the Filing of an Appeal Brief	Application No.	Applicant(s)	
	10/648,012	WOOLFORK, C. EARL	
	Examiner	Art Unit	
	Andrew C. Flanders	2615	

--The MAILING DATE of this communication appears on the cover sheet with the correspondence address --

THE REPLY FILED 29 November 2006 FAILS TO PLACE THIS APPLICATION IN CONDITION FOR ALLOWANCE.

1. ☒ The reply was filed after a final rejection, but prior to or on the same day as filing a Notice of Appeal. To avoid abandonment of this application, applicant must timely file one of the following replies: (1) an amendment, affidavit, or other evidence, which places the application in condition for allowance; (2) a Notice of Appeal (with appeal fee) in compliance with 37 CFR 41.31; or (3) a Request for Continued Examination (RCE) in compliance with 37 CFR 1.114. The reply must be filed within one of the following time periods:
   a) ☐ The period for reply expires _____months from the mailing date of the final rejection.
   b) ☒ The period for reply expires on: (1) the mailing date of this Advisory Action, or (2) the date set forth in the final rejection, whichever is later. In no event, however, will the statutory period for reply expire later than SIX MONTHS from the mailing date of the final rejection.
   Examiner Note: If box 1 is checked, check either box (a) or (b). ONLY CHECK BOX (b) WHEN THE FIRST REPLY WAS FILED WITHIN TWO MONTHS OF THE FINAL REJECTION. See MPEP 706.07(f).

Extensions of time may be obtained under 37 CFR 1.136(a). The date on which the petition under 37 CFR 1.136(a) and the appropriate extension fee have been filed is the date for purposes of determining the period of extension and the corresponding amount of the fee. The appropriate extension fee under 37 CFR 1.17(a) is calculated from: (1) the expiration date of the shortened statutory period for reply originally set in the final Office action; or (2) as set forth in (b) above, if checked. Any reply received by the Office later than three months after the mailing date of the final rejection, even if timely filed, may reduce any earned patent term adjustment. See 37 CFR 1.704(b).

NOTICE OF APPEAL

2. ☐ The Notice of Appeal was filed on _____. A brief in compliance with 37 CFR 41.37 must be filed within two months of the date of filing the Notice of Appeal (37 CFR 41.37(a)), or any extension thereof (37 CFR 41.37(e)), to avoid dismissal of the appeal. Since a Notice of Appeal has been filed, any reply must be filed within the time period set forth in 37 CFR 41.37(a).

AMENDMENTS

3. ☒ The proposed amendment(s) filed after a final rejection, but prior to the date of filing a brief, will not be entered because
   (a) ☒ They raise new issues that would require further consideration and/or search (see NOTE below);
   (b) ☐ They raise the issue of new matter (see NOTE below);
   (c) ☐ They are not deemed to place the application in better form for appeal by materially reducing or simplifying the issues for appeal; and/or
   (d) ☐ They present additional claims without canceling a corresponding number of finally rejected claims.
   NOTE: *See Continuation Sheet*. (See 37 CFR 1.116 and 41.33(a)).
4. ☐ The amendments are not in compliance with 37 CFR 1.121. See attached Notice of Non-Compliant Amendment (PTOL-324).
5. ☐ Applicant's reply has overcome the following rejection(s): _____.
6. ☐ Newly proposed or amended claim(s) _____ would be allowable if submitted in a separate, timely filed amendment canceling the non-allowable claim(s).
7. ☒ For purposes of appeal, the proposed amendment(s): a) ☒ will not be entered, or b) ☐ will be entered and an explanation of how the new or amended claims would be rejected is provided below or appended.
   The status of the claim(s) is (or will be) as follows:
   Claim(s) allowed: _____.
   Claim(s) objected to: _____.
   Claim(s) rejected: *1,4,6,7 and 10-53*.
   Claim(s) withdrawn from consideration: _____.

AFFIDAVIT OR OTHER EVIDENCE

8. ☐ The affidavit or other evidence filed after a final action, but before or on the date of filing a Notice of Appeal will not be entered because applicant failed to provide a showing of good and sufficient reasons why the affidavit or other evidence is necessary and was not earlier presented. See 37 CFR 1.116(e).
9. ☐ The affidavit or other evidence filed after the date of filing a Notice of Appeal, but prior to the date of filing a brief, will not be entered because the affidavit or other evidence failed to overcome all rejections under appeal and/or appellant fails to provide a showing a good and sufficient reasons why it is necessary and was not earlier presented. See 37 CFR 41.33(d)(1).
10. ☐ The affidavit or other evidence is entered. An explanation of the status of the claims after entry is below or attached.

REQUEST FOR RECONSIDERATION/OTHER

11. ☐ The request for reconsideration has been considered but does NOT place the application in condition for allowance because: _____.
12. ☐ Note the attached Information Disclosure Statement(s). (PTO/SB/08) Paper No(s). _____
13. ☐ Other: _____.

SONY EXHIBIT 1005 – 0604

Continuation of 3. NOTE: The claims contain amendments that change the scope of the claims and will require further search and or consideration.

SINH TRAN
SUPERVISORY PATENT EXAMINER

SONY EXHIBIT 1005 – 0605

OIPE
AUG 15 2006
PATENT & TRADEMARK OFFICE

(Express Mail Label No.: ET615079096US)

IN THE UNITED STATES PATENT AND TRADEMARK OFFICE

Application No.:	10/648,012
Applicant:	WOOLFORK, C. Earl
Filing Date:	08/26/2003
Title:	WIRELESS DIGITAL AUDIO MUSIC SYSTEM
TC/A.U.:	2615
Confirmation No.	3337
Examiner:	FLANDERS, Andrew C.
Docket No.	W003-4000

Mail Stop AMENDMENT
Commissioner for Patents
Post Office Box 1450
Alexandria, Virginia 22313-1450

RESPONSE TO OFFICE ACTION

Dear Sir:

In response to the Office Action of May 17, 2006, please amend without prejudice the above-identified patent application as follows:

Amendments to the Specification begin on page 2 of this paper.

Amendments to the Drawings begin on page 11 of this paper.

Amendments to the Claims are reflected in the listing of claims, which begins on page 12 of this paper.

Remarks/Arguments begin on page 36 of this paper.

08/17/2006 WABDELR1 00000067 10648012
01 FC:2201 1100.00 OP
02 FC:2202 1000.00 OP

12/29/2006 SFELEKE1 00000006 10648012
01 FC:2201 900.00 OP
02 FC:2202 700.00 OP

Refund Ref:
12/29/2006 0030036822

Credit Card Refund Total: $500.00

Acct....: XXXXXXXXXXX9167

Adjustment date: 12/29/2006 SFELEKE1
08/17/2006 WABDELR1 00000067 10648012
01 FC:2201 -1100.00 OP
02 FC:2202 -1000.00 OP

SONY EXHIBIT 1005 – 0606

PATENT TRADEMARK OFFICE
DIVISION

The Patel Law Firm
A Professional Corporation

2532 Dupont Drive, Irvine, California 92612
Tel: (949) 955-1077 - Fax: (949) 955-1877
NPatel@thePatelLawFirm.com

2006 DEC -5 PM 4:07

November 30, 2006

United States Patent and Trademark Office
Mail Stop 16
Director of the USPTO
P.O. Box 1450
Alexandria, Virginia 22313-1450

Re: Application No.: 10/648,012
Our File No.: W003-4000

Dear Sir or Madam:

This letter is in reference to the Patent Application Fee Determination Record ("Fee Record"), a copy of which is enclosed.

On August 15, 2006, this office filed a Response to Office Action of May 17, 2006 and paid $2,100 in filing fees. Based on the Fee Record, the correct amount that was due was $1,600. We would appreciate if a refund for $500 was credited back to us, and deposited directly in our USPTO Deposit Account, Number 50-4010.

Thank you for your prompt attention to this matter. Should you have any questions, please do not hesitate to contact us.

Very truly yours,
The Patel Law Firm, P.C.

Natu J. Patel

Enclosure
NJP/ec

PATENT APPLICATION FEE DETERMINATION RECORD
Effective January 1, 2003

Application or Docket Number: 10/648012

CLAIMS AS FILED - PART I

	(Column 1)	(Column 2)
TOTAL CLAIMS	5	
FOR	NUMBER FILED	NUMBER EXTRA
TOTAL CHARGEABLE CLAIMS	5 minus 20=	* Ø
INDEPENDENT CLAIMS	3 minus 3 =	* Ø
MULTIPLE DEPENDENT CLAIM PRESENT		☐

* If the difference in column 1 is less than zero, enter "0" in column 2

SMALL ENTITY TYPE ☐ OR OTHER THAN SMALL ENTITY

RATE	FEE		RATE	FEE
BASIC FEE	375.00	OR	BASIC FEE	750.00
X$ 9=		OR	X$18=	
X42=		OR	X84=	
+140=		OR	+280=	
TOTAL	375	OR	TOTAL	

8/15/06

CLAIMS AS AMENDED - PART II

AMENDMENT ①

	(Column 1) CLAIMS REMAINING AFTER AMENDMENT		(Column 2) HIGHEST NUMBER PREVIOUSLY PAID FOR	(Column 3) PRESENT EXTRA
Total	* 48	Minus	** 20	= 28
Independent	* 19	Minus	*** 10	= 9
FIRST PRESENTATION OF MULTIPLE DEPENDENT CLAIM				☐

SMALL ENTITY OR OTHER THAN SMALL ENTITY

RATE	ADDITIONAL FEE		RATE	ADDITIONAL FEE
~~X$ 9=~~ 85	700	OR	X$18=	
~~X42=~~ 100	900	OR	X84=	
+140=		OR	+280=	
TOTAL ADDIT. FEE	1600	OR	TOTAL ADDIT. FEE	

AMENDMENT ②

	(Column 1) CLAIMS REMAINING AFTER AMENDMENT		(Column 2) HIGHEST NUMBER PREVIOUSLY PAID FOR	(Column 3) PRESENT EXTRA
Total	*	Minus	**	=
Independent	*	Minus	***	=
FIRST PRESENTATION OF MULTIPLE DEPENDENT CLAIM				☐

RATE	ADDITIONAL FEE		RATE	ADDITIONAL FEE
X$ 9=		OR	X$18=	
X42=		OR	X84=	
+140=		OR	+280=	
TOTAL ADDIT. FEE		OR	TOTAL ADDIT. FEE	

AMENDMENT ③

	(Column 1) CLAIMS REMAINING AFTER AMENDMENT		(Column 2) HIGHEST NUMBER PREVIOUSLY PAID FOR	(Column 3) PRESENT EXTRA
Total	*	Minus	**	=
Independent	*	Minus	***	=
FIRST PRESENTATION OF MULTIPLE DEPENDENT CLAIM				☐

RATE	ADDITIONAL FEE		RATE	ADDITIONAL FEE
X$ 9=		OR	X$18=	
X42=		OR	X84=	
+140=		OR	+280=	
TOTAL ADDIT. FEE		OR	TOTAL ADDIT. FEE	

* If the entry in column 1 is less than the entry in column 2, write "0" in column 3.
** If the "Highest Number Previously Paid For" IN THIS SPACE is less than 20, enter "20."
*** If the "Highest Number Previously Paid For" IN THIS SPACE is less than 3, enter "3."
The "Highest Number Previously Paid For" (Total or Independent) is the highest number found in the appropriate box in column 1.

OIPE MP86
JAN 29 2007
PATENT & TRADEMARK OFFICE

01-30-07

AF

PTO/SB/21 (07-06)
Approved for use through 09/30/2006. OMB 0651-0031
U.S. Patent and Trademark Office; U.S. DEPARTMENT OF COMMERCE
Under the Paperwork Reduction Act of 1995, no persons are required to respond to a collection of information unless it displays a valid OMB control number.

TRANSMITTAL FORM

(to be used for all correspondence after initial filing)

Total Number of Pages in This Submission	79

Application Number	10/648,012
Filing Date	08/26/2003
First Named Inventor	Woolfork, C. Earl
Art Unit	2615
Examiner Name	Flanders, Andrew C.
Attorney Docket Number	W003-4000

ENCLOSURES *(Check all that apply)*

- ☐ Fee Transmittal Form
  - ☐ Fee Attached
- ☑ Amendment/Reply
  - ☑ After Final
  - ☑ Affidavits/declaration(s)
- ☐ Extension of Time Request
- ☐ Express Abandonment Request
- ☐ Information Disclosure Statement
- ☐ Certified Copy of Priority Document(s)
- ☐ Reply to Missing Parts/ Incomplete Application
  - ☐ Reply to Missing Parts under 37 CFR 1.52 or 1.53
- ☐ Drawing(s)
- ☐ Licensing-related Papers
- ☐ Petition
- ☐ Petition to Convert to a Provisional Application
- ☐ Power of Attorney, Revocation Change of Correspondence Address
- ☐ Terminal Disclaimer
- ☐ Request for Refund
- ☐ CD, Number of CD(s) _____
  - ☐ Landscape Table on CD
- ☐ After Allowance Communication to TC
- ☐ Appeal Communication to Board of Appeals and Interferences
- ☐ Appeal Communication to TC **(Appeal Notice, Brief, Reply Brief)**
- ☐ Proprietary Information
- ☐ Status Letter
- ☐ Other Enclosure(s) (please Identify below):

Remarks

EXPRESS MAIL LABEL NO.: EB 069222608 US

SIGNATURE OF APPLICANT, ATTORNEY, OR AGENT

Firm Name	The Patel Law Firm, P.C.		
Signature			
Printed name	Natu J. Patel		
Date	1/29/07	Reg. No.	39,559

CERTIFICATE OF TRANSMISSION/MAILING

I hereby certify that this correspondence is being facsimile transmitted to the USPTO or deposited with the United States Postal Service with sufficient postage as first class mail in an envelope addressed to: Commissioner for Patents, P.O. Box 1450, Alexandria, VA 22313-1450 on the date shown below:

Signature			
Typed or printed name	Natu J. Patel	Date	1/29/07

This collection of information is required by 37 CFR 1.5. The information is required to obtain or retain a benefit by the public which is to file (and by the USPTO to process) an application. Confidentiality is governed by 35 U.S.C. 122 and 37 CFR 1.11 and1.14. This collection is estimated to 2 hours to complete, including gathering, preparing, and submitting the completed application form to the USPTO. Time will vary depending upon the individual case. Any comments on the amount of time you require to complete this form and/or suggestions for reducing this burden, should be sent to the Chief Information Officer, U.S. Patent and Trademark Office, U.S. Department of Commerce, P.O. Box 1450, Alexandria, VA 22313-1450. DO NOT SEND FEES OR COMPLETED FORMS TO THIS ADDRESS. **SEND TO: Commissioner for Patents, P.O. Box 1450, Alexandria, VA 22313-1450.**

If you need assistance in completing the form, call 1-800-PTO-9199 and select option 2.

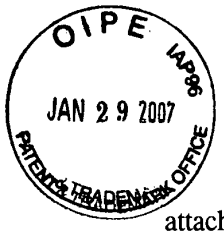

CERTIFICATE OF EXPRESS MAIL

I hereby certify that this paper (along with any paper referred to as being attached or enclosed) is being deposited with the United States Postal Service on the date shown below with sufficient postage via EXPRESS MAIL in an envelope addressed as follows (**EXPRESS MAIL LABEL NO.: EB 069222608 US**):

Mail Stop AF
Commissioner for Patents
Post Office Box 1450
Alexandria, Virginia 22313-1450

Natu J. Patel, USPTO Reg. No. 39,559 Date: January 29, 2007

OIPE
JAN 29 2007
PATENT & TRADEMARK OFFICE

EXPRESS MAIL LABEL NO.: EB 069222608 US

IN THE UNITED STATES PATENT AND TRADEMARK OFFICE

Application No.:	10/648,012
Applicant:	WOOLFORK, C. Earl
Filing Date:	08/26/2003
Title:	WIRELESS DIGITAL AUDIO MUSIC SYSTEM
TC/A.U.:	2615
Confirmation No.	3337
Examiner:	FLANDERS, Andrew C.
Docket No.	W003-4000

Mail Stop AF
Commissioner for Patents
Post Office Box 1450
Alexandria, Virginia 22313-1450

SUPPLEMENTAL AFTER FINAL RESPONSE TO OFFICE ACTION

Dear Sir:

In response to the Final Office Action of October 2, 2006 and Advisory Action of December 27, 2006, please amend without prejudice the above-identified patent application as follows:

Amendments to the Specification begin on page 2 of this paper.

Amendments to the Claims are reflected in the listing of claims, which begins on page 4 of this paper.

Remarks/Arguments begin on page 19 of this paper.

AMENDMENTS TO SPECIFICATION:

Please amend paragraph [0010] as follows:

Particularly, the received spread spectrum signal may be communicated to a 2.4 GHz direct conversion receiver or module 56. ~~A frequency shift keying (FSK) modulation/detection technique could be used given a frequency hopping spread spectrum (FHSS) system choice.~~ Referring to Figures 1 through 4, the spread spectrum modulated signal from transmit antenna 24 may be received by receiving antenna 52 and then processed by spread spectrum direct conversion receiver or module 56 with a receiver code generator 60 that contains the same transmitted unique code, in the battery powered receiver 50 headphones. The transmitted signal from antenna 24 may be received by receiving antenna 52 and communicated to a wideband bandpass filter (BPF). The battery powered receiver 50 may utilize embedded fuzzy logic (as graphically depicted in Figures 1, 4) to optimize the bit detection of the received user code. The down converted output signal of direct conversion receiver or module 56 may be summed in receiver summing element 58 with a receiver code generator 60 signal. The receiver code generator 60 may contain the same unique wireless transmission of a signal code word that was transmitted by audio transmitter 20 specific to a particular user. Other code words from wireless digital audio systems 10 may appear as noise to audio receiver 50. This may also be true for wireless signals operating in the wireless digital audio spectrum of digital audio system 10. This code division multiple access (CDMA) may be used to provide each user independent audible enjoyment. The resulting summed digital signal from receiving summary element 58

SONY EXHIBIT 1005 – 0612

may be processed by a 64-Ary demodulator 62 to demodulate the signal elements modulated in the audio transmitter 20. A block de-interleaver 64 may then decode the bits of the digital signal encoded in the block interleaver 40. Following such, a Viterbi decoder 66 may be used to decode the bits encoded by channel encoder 38 in audio transmitter 20. A source decoder 68 may further decode the coding applied by encoder 36.

SONY EXHIBIT 1005 – 0613

AMENDMENT TO CLAIMS:

This listing of claims will replace all prior versions, and listings, of claims in the application.

Listing of Claims:

Claims 1 - 18 (canceled).

19. (Previously Presented) A wireless digital audio system, comprising:

at least one audio source;

at least one digital audio transmitter operatively coupled to said at least one audio source, said at least one audio transmitter comprising:

a first analog low pass filter receiving audio output from said at least one audio source;

a digital low pass filter;

an analog-to-digital converter (ADC) operatively coupled between said first analog and digital low pass filters;

a first encoder receiving output from said digital low pass filter and being configured to reduce intersymbol interference (ISI);

a second channel encoder operatively coupled to said first encoder and adapted to reduce transmission errors;

a digital modulator operatively coupled to said second channel encoder;

SONY EXHIBIT 1005 – 0614

and

a differential phase shift key (DPSK) module receiving output from said digital modulator and being configured for direct sequence spread spectrum (DSSS) communication, said DPSK module transmitting a corresponding DSSS signal;

at least one audio receiver configured for digital wireless communication with said at least one audio transmitter and utilizing embedded fuzzy logic to optimize digital signal processing, said at least one audio receiver comprising:

a band pass filter (BPF) configured to process said transmitted DSSS signal;

a direct conversion module receiving output from said BPF and being configured to capture the correct bit sequence embedded in said processed DSSS signal;

a digital demodulator adapted to process output from said direct conversion module;

a Viterbi decoder operatively coupled to said digital demodulator and generating a corresponding digital output;

a source decoder processing said digital output from said Viterbi decoder and being configured to decode the digital signal encoded by said first encoder;

a second analog low pass filter; and

a digital-to-analog converter (DAC) operatively coupled between said source decoder and said second analog low pass filter, said second analog low pass filter generating an audio output corresponding to the decoded and converted digital signal; and

at least one module adapted to reproduce said generated audio output, said audio output having been wirelessly transmitted from said at least one audio source to a user without interference from other users or wireless devices.

20. (Previously Presented) The wireless digital audio system of Claim 19, wherein said BPF is a wideband BPF.

21. (Previously Presented) The wireless digital audio system of Claim 19, wherein said modulator is a 64-Ary modulator.

22. (Previously Presented) The wireless digital audio system of Claim 19, wherein said demodulator is a 64-Ary demodulator.

23. (Previously Presented) The wireless digital audio system of Claim 19, wherein said generated audio output is in the approximate range of 20 Hz to 20 kHz.

24. (Previously Presented) The wireless digital audio system of Claim 19, wherein said spread spectrum signal is transmitted at about 2.4 GHz via an omni-directional antenna.

25. (Previously Presented) The wireless digital audio system of Claim 24, wherein said spread spectrum signal is transmitted at a power of about 100 milliwatts or

SONY EXHIBIT 1005 – 0616

less.

26. (Previously Presented) The wireless digital audio system of Claim 19, wherein said ADC is a 4-bit analog-to-digital converter.

27. (Previously Presented) The wireless digital audio system of Claim 19, wherein said at least one audio source is a portable audio player.

28. (Previously Presented) The wireless digital audio system of Claim 19, wherein said at least one audio reproducing module includes at least one headphone speaker.

29. (Previously Presented)The wireless digital audio system of Claim 19, wherein said BPF is operatively coupled to at least one antenna configured to receive said transmitted DSSS signal.

30. (Previously Presented) A wireless digital audio system, comprising:

at least one audio source;

at least one digital audio transmitter operatively coupled to said at least one audio source, said at least one audio transmitter comprising:

a first analog low pass filter receiving audio output from said at least one audio source;

a digital low pass filter;

an analog-to-digital converter (ADC) operatively coupled between said first analog and digital low pass filters;

a first encoder receiving output from said digital low pass filter and being configured to reduce intersymbol interference (ISI);

a second channel encoder operatively coupled to said first encoder and adapted to reduce transmission errors;

a digital modulator operatively coupled to said second channel encoder; and

a differential phase shift key (DPSK) module receiving output from said digital modulator and being configured for direct sequence spread spectrum (DSSS) communication, said DPSK module transmitting a corresponding DSSS signal;

at least one audio receiver configured for digital wireless communication with said at least one audio transmitter and utilizing embedded fuzzy logic to optimize digital signal processing, said at least one audio receiver comprising:

a band pass filter (BPF) configured to process said transmitted DSSS signal;

a direct conversion module receiving output from said BPF and being configured to capture the correct bit sequence embedded in said processed DSSS signal;

a digital demodulator adapted to process output from said direct conversion module;

a Viterbi decoder operatively coupled to said digital demodulator and

SONY EXHIBIT 1005 – 0618

generating a corresponding digital output;

a source decoder processing said digital output from said Viterbi decoder and being configured to decode the digital signal encoded by said first encoder;

a second analog low pass filter; and

a digital-to-analog converter (DAC) operatively coupled between said source decoder and said second analog low pass filter, said second analog low pass filter generating an audio output corresponding to the decoded and converted digital signal;

at least one module adapted to amplify said generated audio output; and

at least one module adapted to reproduce said amplified audio output, said audio output having been wirelessly transmitted from said at least one audio source to a user without interference from other users or wireless devices.

31. (Previously Presented) The wireless digital audio system of Claim 30, wherein said at least one audio amplifying module includes at least one power amplifier, said at least one power amplifier being configured to provide a low distortion audio signal output.

32. (Previously Presented) The wireless digital audio system of Claim 31, wherein said at least one audio reproducing module includes at least one headphone speaker, said at least one headphone speaker receiving said low distortion audio signal output from said at least one power amplifier.

SONY EXHIBIT 1005 – 0619

33. (Previously Presented) A wireless digital audio system, comprising:

at least one audio source;

at least one digital audio transmitter operatively coupled to said at least one audio source;

at least one audio receiver adapted for digital wireless communication with said at least one audio transmitter, each of said at least one digital audio transmitter and receiver being configured for code division multiple access (CDMA) communication; and

at least one module adapted to audibly reproduce said processed CDMA signal, said CDMA communication configuration providing a user with independent audio reproduction free of interference from other users or wireless devices.

34. (Previously Presented) A wireless digital audio system, comprising:

at least one audio source;

at least one digital audio transmitter operatively coupled to said at least one audio source;

at least one audio receiver adapted for digital wireless communication with said at least one audio transmitter, each of said at least one digital audio transmitter and receiver being configured for code division multiple access (CDMA) communication;

at least one module adapted to amplify said processed CDMA signal; and

at least one module adapted to audibly reproduce said amplified signal, said

SONY EXHIBIT 1005 – 0620

CDMA communication configuration providing a user with independent audio reproduction free of interference from other users or wireless devices.

Claims 35 - 36 (canceled).

37. (Previously Presented) The wireless digital audio system of Claim 33, wherein said at least one audio source provides analog output in the approximate range of 20 Hz to 20 kHz.

38. (Previously Presented) The wireless digital audio system of Claim 34, wherein said at least one audio source provides analog output in the approximate range of 20 Hz to 20 kHz.

Claims 39 - 40 (canceled).

41. (Previously Presented) The wireless digital audio system of Claim 33, wherein at least one of said digital audio transmitter and receiver is battery-powered.

42. (Previously Presented) The wireless digital audio system of Claim 34, wherein at least one of said digital audio transmitter and receiver is battery-powered.

43. (Previously Presented) A wireless digital audio system, comprising:

SONY EXHIBIT 1005 – 0621

at least one audio source;

at least one digital audio transmitter operatively coupled to said at least one audio source, said at least one audio transmitter comprising:

a first analog low pass filter receiving audio output from said at least one audio source;

a digital low pass filter;

an analog-to-digital converter (ADC) operatively coupled between said first analog and digital low pass filters;

a first encoder receiving output from said digital low pass filter and being configured to reduce intersymbol interference (ISI);

a second channel encoder operatively coupled to said first encoder and adapted to reduce transmission errors;

a digital modulator operatively coupled to said second channel encoder; and

a differential phase shift key (DPSK) module receiving output from said digital modulator and being configured for direct sequence spread spectrum (DSSS) communication, said DPSK module transmitting a corresponding DSSS signal;

at least one audio receiver configured for digital wireless communication with said at least one audio transmitter, said at least one audio receiver comprising:

a band pass filter (BPF) configured to process said transmitted DSSS signal;

a direct conversion module receiving output from said BPF and being

configured to capture the correct bit sequence embedded in said processed DSSS signal;

a digital demodulator adapted to process output from said direct conversion module;

a Viterbi decoder operatively coupled to said digital demodulator and generating a corresponding digital output;

a source decoder processing said digital output from said Viterbi decoder and being configured to decode the digital signal encoded by said first encoder;

a second analog low pass filter; and

a digital-to-analog converter (DAC) operatively coupled between said source decoder and said second analog low pass filter, said second analog low pass filter generating an audio output corresponding to the decoded and converted digital signal; and

at least one module adapted to reproduce said generated audio output, said audio output having been wirelessly transmitted from said at least one audio source to a user without interference from other users or wireless devices.

44. (Previously Presented) A wireless digital audio system, comprising:

at least one audio source;

at least one digital audio transmitter operatively coupled to said at least one audio source, said at least one audio transmitter comprising:

a first analog low pass filter receiving audio output from said at least one audio source;

a digital low pass filter;

an analog-to-digital converter (ADC) operatively coupled between said first analog and digital low pass filters;

a first encoder receiving output from said digital low pass filter and being configured to reduce intersymbol interference (ISI);

a second channel encoder operatively coupled to said first encoder and adapted to reduce transmission errors;

a digital modulator operatively coupled to said second channel encoder; and

a differential phase shift key (DPSK) module receiving output from said digital modulator and being configured for direct sequence spread spectrum (DSSS) communication, said DPSK module transmitting a corresponding DSSS signal;

at least one audio receiver configured for digital wireless communication with said at least one audio transmitter, said at least one audio receiver comprising:

a band pass filter (BPF) configured to process said transmitted DSSS signal;

a direct conversion module receiving output from said BPF and being configured to capture the correct bit sequence embedded in said processed DSSS signal;

a digital demodulator adapted to process output from said direct conversion module;

a Viterbi decoder operatively coupled to said digital demodulator and generating a corresponding digital output;

SONY EXHIBIT 1005 – 0624

a source decoder processing said digital output from said Viterbi decoder and being configured to decode the digital signal encoded by said first encoder;

a second analog low pass filter; and

a digital-to-analog converter (DAC) operatively coupled between said source decoder and said second analog low pass filter, said second analog low pass filter generating an audio output corresponding to the decoded and converted digital signal;

at least one module adapted to amplify said generated audio output; and

at least one module adapted to reproduce said amplified audio output, said audio output having been wirelessly transmitted from said at least one audio source to a user without interference from other users or wireless devices.

45. (Previously Presented) The wireless digital audio system of Claim 43, wherein said at least one audio source provides analog output in the approximate range of 20 Hz to 20 kHz.

46. (Previously Presented) The wireless digital audio system of Claim 44, wherein said at least one audio source provides analog output in the approximate range of 20 Hz to 20 kHz.

47. (Previously Presented) The wireless digital audio system of Claim 43, wherein at least one of said digital audio transmitter and receiver is battery-powered.

SONY EXHIBIT 1005 – 0625

48. (Previously Presented) The wireless digital audio system of Claim 44, wherein at least one of said digital audio transmitter and receiver is battery-powered.

49. (Previously Presented) The wireless digital audio system of Claim 43, wherein said at least one audio source is a portable music player.

50. (Previously Presented) The wireless digital audio system of Claim 44, wherein said at least one audio source is a portable music player.

51. (Previously Presented) A wireless digital audio transmitter, comprising:

a first analog low pass filter receiving audio output from at least one audio source;

a digital low pass filter;

an analog-to-digital converter (ADC) operatively coupled between said first analog and digital low pass filters;

a first encoder receiving output from said digital low pass filter and being configured to reduce intersymbol interference (ISI);

a second channel encoder operatively coupled to said first encoder and adapted to reduce transmission errors;

a digital modulator operatively coupled to said second channel encoder; and

SONY EXHIBIT 1005 – 0626

a differential phase shift key (DPSK) module receiving output from said digital modulator and being configured for direct sequence spread spectrum (DSSS) communication, said DPSK module transmitting a corresponding DSSS signal.

52. (Previously Presented) A wireless digital audio receiver, comprising:

a band pass filter (BPF) configured to process a transmitted DSSS signal;

a direct conversion module receiving output from said BPF and being configured to capture the correct bit sequence embedded in said processed DSSS signal;

a digital demodulator adapted to process output from said direct conversion module;

a Viterbi decoder operatively coupled to said digital demodulator and generating a corresponding digital output;

a source decoder receiving said digital output from said Viterbi decoder and being configured to decode the digital signal encoded therein;

a second analog low pass filter; and

a digital-to-analog converter (DAC) operatively coupled between said source decoder and said second analog low pass filter, said second analog low pass filter generating an audio output corresponding to the decoded and converted digital signal, said audio output having been wirelessly transmitted to a user without interference from other users or wireless devices.

53. (Previously Presented) A wireless digital audio receiver utilizing embedded

SONY EXHIBIT 1005 – 0627

fuzzy logic to optimize digital signal processing, comprising:

a band pass filter (BPF) configured to process a transmitted DSSS signal;

a direct conversion module receiving output from said BPF and being configured to capture the correct bit sequence embedded in said processed DSSS signal;

a digital demodulator adapted to process output from said direct conversion module;

a Viterbi decoder operatively coupled to said digital demodulator and generating a corresponding digital output;

a source decoder receiving said digital output from said Viterbi decoder and being configured to decode the digital signal encoded therein;

a second analog low pass filter; and

a digital-to-analog converter (DAC) operatively coupled between said source decoder and said second analog low pass filter, said second analog low pass filter generating an audio output corresponding to the decoded and converted digital signal, said audio output having been wirelessly transmitted to a user without interference from other users or wireless devices.

SONY EXHIBIT 1005 – 0628

REMARKS/ARGUMENTS

Applicant has reviewed the Office Action of October 2, 2006 and made amendments to the claims, as indicated hereinabove, to overcome the Examiner's objections and place the application in condition for allowance. No new matter has been added.

RESPONSE TO AFFIDAVITS:

DECLARATION

Examiner indicates that the Declaration filed by the Applicant on August 15, 2006, regarding the limited battery life under 37 CFR 1.132, is insufficient to overcome the rejection of the claims based upon the combination of Altstatt (U.S. Patent 5,771,441) in view of Schotz et al (U.S. Patent 5,946,343). Since the Examiner indicated that some of the documents and data sheets were unreadable, a complete copy of the Declaration ("Declaration") with Exhibits is forwarded once again, as EXHIBIT - I. Applicant apologizes to the Examiner for any inconvenience this may have caused.

Nonetheless, in the interest of moving forward with the prosecution, Applicant has canceled those claims rejected using the combination of Altstatt (U.S. Patent 5,771,441) in view of Schotz et al (U.S. Patent 5,946,343). Specifically, Applicant cancels Claims 1-18, 35-36 and 39-40 in this amendment without prejudice and without acquiescing or agreeing to the grounds of rejection. Applicant will, however, prosecute these claims in a continuation application.

SONY EXHIBIT 1005 – 0629

Accordingly, the issues raised in the Office Action directed to the Declaration filed by the Applicant on August 15, 2006, no longer apply to the merits of pending claims 19-34, 37-38 and 41-53.

However, since claims 1-18, 35-36, and 39-40 will be included in Applicant's continuing application, Applicant wishes to preserve his rights regarding these claims.

SECOND DECLARATION

Examiner indicates that the second declaration ("Second Declaration") filed by the Applicant on August 15, 2006, regarding FSK and FHSS under 37 CFR 1.132, is insufficient to overcome the rejection of the new matter (See Exhibit 5 to August 15, 2006 Response).

According to the Examiner, the CDMA overview provided by www.telecomspace.com discloses the following three ways to spread the bandwidth of a signal in CDMA:

1) Frequency hopping (FHSS). The signal is rapidly switched between different frequencies within the hopping bandwidth pseudo-randomly, and the receiver knows before hand where to find the signal at any given time.

2) Time hopping (THSS). The signal is transmitted in short bursts pseudo-randomly, and the receiver knows beforehand when to expect the burst.

3) Direct sequence (DHSS). The digital data is directly coded at a much higher frequency. The code is generated pseudo-randomly, the receiver knows how to generate the same code, and correlates the received signal with that code to extract the data.

Examiner asserts that the Applicant discussed the two ways to spread the bandwidth (i.e. FHSS & DHSS) in the Second Declaration and since the website discusses three, FHSS and DHSS are not inherent features of CDMA.

SONY EXHIBIT 1005 – 0630

In this regard, Applicant hereby wishes to clarify that the same website indicates that the CDMA was commercially introduced in 1995, became one of the world's fastest-growing wireless technologies, and it is a form of Direct Sequence Spread Spectrum communication. Applicant is not claiming that he invented FHSS, THSS, or DSSS. Applicant simply relied on a book entitled "Spread Spectrum Systems with Commercial Applications" by a well known author Robert C. Dixon's ("Dixon"), and the Applicant provided excerpts of some relevant pages to the Examiner to clarify the issue. The fact that the website indicated by the Examiner discusses three approaches to spread the bandwidth of the signal versus the two approaches pointed out by Dixon is irrelevant, and even if relevant, the discrepancy by two known sources can be properly explained. For example, on page 47, Dixon explains that "Simple time-hopping modulation offers little in the way of interference rejection because a continuous carrier at the signal center frequency can block communications effectively." And, this may be the reason why Dixon has not elaborated on THSS. A copy of the relevant page(s) from Dixon is attached hereto as EXHIBIT - II.

However, since Applicant has canceled the subject matter indicated in this Office Action as being new matter related to FSK and FHSS in paragraph [0010], the issue raised by the Examiner with reference to Second Declaration is moot and no longer applies to the merits of the pending claims 19-34, 37-38 and 41-53.

The Examiner points out the requirements set forth in MPEP Section 2112, which are related to rejections based on inherency. The Applicant respectfully submits that the arguments presented by the Examiner with reference to inherency appear to be

SONY EXHIBIT 1005 – 0631

out of context. The Federal Circuit in *Kennecott Corp. v. Kyocera Intern., Inc.*, 835 F.2d 1419,1422 (Fed.Cir.1987) held that the doctrine of inherency provides that "[b]y disclosing in a patent application a device that inherently performs a function, ..., a patent applicant necessarily discloses that function ... *even though they say nothing concerning it*." (emphasis added). To rely on this doctrine, the patentee must show that "the missing feature is necessarily present, and that it would be so recognized by persons of ordinary skill in the relevant art." *Telemac Cellular Corp. v. Topp Telecom, Inc.*, 247 F.3d 1316, 1328 (Fed.Cir.2001). The same court further explained that to apply the doctrine of inherency, the party relying on the doctrine must prove that the challenged circumstance "inevitably occurs when the process steps ... are followed," *Kooi v. DeWitt*, 546 F.2d 403, 409 (Cust. & Pat.App.1976), or are "inevitable." *Application of Wilding*, 535 F.2d 631, 636 (Cust. & Pat.App.1976); see also *Kropa v. Robie*, 38 C.C.P.A. 858, 187 F.2d 150, 154-55 (Cust. & Pat.App.1951) ("Inherency does not mean that a thing might happen one out of twenty times.... It must inevitably happen for the doctrine to apply."). In sum, the doctrine of inherency is satisfied where the patent "inherently discloses the invention ... so that one skilled in the art could produce the results claimed in the [patent] simply by practicing the [patent], i.e., the result flows naturally from the express disclosures" of the patent. *Rosco, Inc. v. Mirror Lite Co.*, 139 F.Supp.2d 287 (E.D.N.Y.2001).

As stated above, *www.telecomspace.com* website indicates that the CDMA was commercially introduced in 1995, became one of the world's fastest-growing wireless technologies, and it is a form of Direct Sequence Spread Spectrum communications.

The Applicant has disclosed CDMA and explained how his invention works utilizing a unique codeword that spreads the signal spectrum. Paragraph 0014 of the parent application states that: "Modulation of the digital signal may be performed using *direct sequence spread spectrum communication technology*. A 64-Ary modulator 42 may be used for summation at summation element 46 with a transmitter code generator 44 signal to produce a high symbol rate, and a *unique codeword* that spreads the signal spectrum." (emphasis added). Paragraph 0016 of the parent application states that "This code division multiple access (CDMA) may be used to provide each user independent operation."

Based on the prosecution history, it is abundantly clear that the Applicant has disclosed the use of the CDMA technology to provide each user independent operation. The three ways to spread the bandwidth of the signal, as explained on the website, is simply a method to spread the bandwidth of the signal generated under CDMA. These methods are sub-sets of CDMA protocol. When the Applicant disclosed CDMA and explained how his invention works utilizing a unique codeword that spreads the signal spectrum, the Applicant, in essence, has disclosed all the three ways (i.e. FHSS, THSS, and DSSS) that would be so recognized by persons of ordinary skill in the relevant art. If Applicant's invention utilizes CDMA protocol, as expressly disclosed in paragraph 0016 of the parent application, it is also apparent to one skilled in the art that there are only three ways to spread the bandwidth of a signal under the CDMA (i.e. FHSS, THSS, and DSSS) and therefore these three ways are inherent features of the CDMA protocol. Without these methods for spreading bandwidth, CDMA protocol

SONY EXHIBIT 1005 – 0633

cannot be implemented and therefore these result (i.e. methods to spread the bandwidth) flow naturally from the express disclosures of the patent application (i.e. ". . . (CDMA) may be used to provide each user independent operation." Paragraph 0016 of the parent application).

Based on the above, Applicant respectfully requests that the Examiner withdraws his objections to the Second Declaration.

RESPONSE TO NEW MATTER REJECTIONS:

On page 6 of the Office Action, the Examiner alleges that "a unique hope pattern for each individual user" is not supported by the specification. In the interest of moving of moving forward with the prosecution, Applicant has canceled Claims 1, 4, 6, 7 and 10-13. Specifically, Applicant cancels Claims 1-18, 35-36 and 39-40 in this amendment without prejudice and without acquiescing or agreeing to the grounds of rejection. Applicant will, however, prosecute these claims in a continuation application.

On page 6 of the Office Action, the Examiner alleges that the terms and techniques disclosed in "A frequency shift keying (FSK) modulation/detection technique could be used given a frequency hopping spread spectrum (FHSS) system choice" sentence (FSK and FHSS) were not present in the parent disclosure or in the current application's disclosure and thus are new matter.

Nonetheless, in the interest of moving forward with the prosecution, Applicant has deleted the reference to FSK and FHSS from paragraph [0010] of the specification

SONY EXHIBIT 1005 – 0634

without prejudice and without acquiescing or agreeing to the grounds of objection. Therefore Applicant respectfully requests that the new matter objection pertaining to the sentence "[A] frequency shift keying (FSK) modulation/detection technique could be used given a frequency hopping spread spectrum (FHSS) system choice" be withdrawn.

Since the above identified sentence has been canceled, the objection to the amendment March 14, 2006, should be withdrawn.

Claim Rejections Under 35 U.S.C. §112

The rejection of Claims 1, 4, 6, 10, 12 and 13 under 35 U.S.C. §112, first paragraph, as failing to comply with the written description requirement, is respectfully traversed.

As discussed above, in the interest of moving forward with the prosecution, Applicant has canceled Claims 1, 4, 6, 10, 12 and 13 without prejudice.

Based on the above, Applicant respectfully requests that the 35 U.S.C. §112 rejection of Claims 1, 4, 6, 10, 12 and 13 be withdrawn.

The rejection of Claims 19-32, 43-53 under 35 U.S.C. §112, first paragraph, as failing to comply with the written description requirement, is respectfully traversed.

Examiner alleges that the Claims contain the limitations directed to DSSS, which is not in the original specification nor inherent as alleged by Applicant. The Applicant has disclosed CDMA and explained how his invention works utilizing a unique codeword that spreads the signal spectrum. Paragraph 0014 of the parent application states that: "Modulation of the digital signal may be performed using *direct*

SONY EXHIBIT 1005 – 0635

sequence spread spectrum communication technology." The *direct sequence spread spectrum* refers to DSSS. (emphasis added).

Based on the above, Applicant respectfully submits that Claims 19-32 and 43-53, are definite and comply with the written description requirement and therefore respectfully requests that the 35 U.S.C. §112 rejection of Claims 19-32, 43-53 be withdrawn.

In view of the above remarks, since Claims 19-32, 43-53 are not rejected under any cited references, Claims 19-32 and 43-53 are allowable.

The rejection of Claims 14 and 15 under 35 U.S.C. §112, second paragraph, is respectfully traversed.

Applicant has canceled Claims 14 and 15. Based on this, Applicant respectfully requests that the 35 U.S.C. §112 rejection of Claims 14 and 15 be withdrawn.

In view of the foregoing amendments and remarks, Applicant respectfully requests withdrawal of the §112 claim rejections.

Claim Rejections Under 35 U.S.C. §102

The rejection of Claims 33 and 34 under 35 U.S.C. §102(e) as being anticipated by Lindemann (U.S. Patent Application 2004/0223622) is respectfully traversed.

Claim 33 recites

> *...at least one module adapted to audibly reproduce said processed CDMA signal, said CDMA communication configuration providing a user with independent **audio reproduction free of interference** from other users or wireless devices.* (Emphasis added)

The above emphasized claim language is not taught or suggested by Lindemann. Lindemann does not address reproduction that is interference free. Furthermore, Applicant observes that Lindemann does not mention interference or address the problem identified by Applicant and thus Applicant's solution to provide *a user with independent audio reproduction free of interference from other users or wireless devices*. Instead, Lindemann is directed to digital wireless loudspeaker system and the delivery of signals to the speakers. Thus, Lindemann is not directed to a system capable of (1) providing a user with *independent audio reproduction;* and (2) *reproduction free of interference from other users or wireless devices*.

Claim 34 contains similar language. Thus, the remarks set forth above in relation to Claim 33 equally apply to Claim 34.

Accordingly, Lindemann cannot anticipate Applicant's Claims 33 and 34. For at least this reason, Applicant respectfully requests withdrawal of the rejection of Claims 33 and 34 by Lindemann under 35 U.S.C. §102(e).

Dependent Claims 37 and 41 depend directly or indirectly from independent Claim 33. Furthermore, dependent Claims 38 and 42 depend from independent Claim 34. These dependent claims contain all of the limitations of independent Claims 33 or 34, thus, any rejections under 35 U.S.C. §§102 or 103 should be withdrawn by virtue of their dependency from independent Claims 33 or 34.

SONY EXHIBIT 1005 – 0637

Claim Rejections Under 35 U.S.C. §103

As stated earlier, Claims 1-18 and 35-36 and 39-40 have been canceled without prejudice in this amendment and will be filed in a continuation application. Applicant does not acquiesce or agree to the grounds of rejection of Claims 1-18; however, because they have been cancelled, the basis of rejection of these claims will not be addressed.

The rejection of Claims 37 and 38 under 35 U.S.C. §103(a) as being unpatentable by Lindemann (U.S. Patent Application 2004/0223622) in view of Schotz '343 is respectfully traversed.

Schotz '343 is relied upon for a teaching of an analog output of 20 Hz to 20 KHz. However, Schotz '343 does not teach the deficiencies of Lindemann previously described in relation to independent Claims 33 and 34. Hence, the combination of Lindemann as modified Schotz '343 does not teach all the limitations of the base Claims (33 and 34) from which Claims 37 and 38 depend.

In view of the above remarks, the rejection of Claims 37 and 38 under 35 U.S.C. §103(a) as being unpatentable by Lindemann in view of Schotz '343 should be withdrawn.

The rejection of Claims 41 and 42 under 35 U.S.C. §103(a) as being unpatentable by Lindemann (U.S. Patent Application 2004/0223622) is respectfully traversed.

Lindemann as modified by the Examiner does not teach the deficiencies described in relation to independent Claims 33 and 34. Hence, Lindemann as modified

SONY EXHIBIT 1005 – 0638

does not teach the claimed invention since Lindemann as modified does not teach all the limitation of the base Claims (33 and 34) from which Claims 41 and 42 depend.

In view of the above remarks, the rejection of Claims 41 and 42 under 35 U.S.C. §103(a) as being unpatentable by Lindemann should be withdrawn.

Interview Summary in Compliance with MPEP Section 713.04

Applicant would like to thank Examiner Flanders for the courtesy extended during the Interview of January 29, 2006. During the interview, Examiner Flanders discussed the allowability of certain claims. Examiner Flanders decided to defer the decision pending review of the Supplemental Response.

SONY EXHIBIT 1005 – 0639

Conclusion

No amendment made was related to the statutory requirements of patentability unless expressly stated herein. No new claims have been added. Applicant believes that the application, as presently amended, is in condition for allowance. If for any reason the Examiner finds the application other than in condition for allowance, **Applicant respectfully requests** the Examiner to call the undersigned attorney at the telephone number listed herein below to discuss any steps necessary for placing the application in condition for allowance.

Respectfully submitted,
THE PATEL LAW FIRM, P.C.

Date: January 29th, 2007

Natu J. Patel
USPTO Reg. No. 39,559

NJP/lv/ec
Enclosure:
THE PATEL LAW FIRM, P.C.
2532 Dupont Drive
Irvine, California 92612-1524
Business: (949) 955-1077
Facsimile: (949) 955-1877
www.thepatellawfirm.com
NPatel@thePatelLawFirm.com

SONY EXHIBIT 1005 – 0640

OIPE
JAN 29 2007
PATENT & TRADEMARK OFFICE

I hereby certify that this correspondence (including Exhibits) is being deposited with the United States Postal Service via Express Mail in an envelope addressed to the Commissioner for Patents, P.O. Box 1450, Alexandria, VA 22313-1450, on August 15, 2006 (Express Mail Label No.: ET615079096US).

Natu J. Patel

IN THE UNITED STATES PATENT AND TRADEMARK OFFICE

In re Application of C. Earl Woolfork	
Serial No. 10/648,012	Group Art Unit: 2615
Confirm. No.: 3337	Examiner: Andrew C. Flanders
Filed: August 26, 2003	

For: WIRELESS DIGITAL AUDIO MUSIC SYSTEM

DECLARATION OF APPLICANT REGARDING LIMITED BATTERY LIFE UNDER 35 USC Section 132

I, C. Earl Woolfork, being duly sworn, depose and declare as follows:

1. I am the Inventor of the above referenced patent application ("Application"). I have personal knowledge of the following matter and if asked to testify, could and would testify competently, thereto.

2. Daphne Burton, my then attorney, conducted the interview with Examiner Flanders and Supervisory Patent Examiner Tran (collectively "Examiners") on June 13, 2006 regarding the pending office action dated May 17, 2006. I participated in that interview.

3. During the interview, among other things, we discussed U.S. Patent No. 5,771,441 issued to Altstatt ("Alstatt" or "'the 441 Patent") and U.S. Patent No. 5,946,343 issued to Schotz ("Schotz" or "'the 343 Patent").

4. Examiners requested that I submit evidence in an affidavit under 35 USC Section 132 explaining as to why the combination of Altstatt in view of Schotz is non-operative due to limited battery life.

5. I am hereby submitting this affidavit and all the supporting documentation to the Examiners for their consideration.

6. Altstatt's invention is based on an analog technology and is operated by a battery. Altstatt recites that the maximum value of V is fixed by the battery voltage of 1.5 or possibly 3 volts (Column 8, lines 22-24).

7. Schotz' invention is based on digital technology. Schotz's digital wireless speaker system requires 120VAC at 60Hz. Schotz further states that "[b]oth the transmitter 22 and the receiver 24 have respective power circuits (not shown) that convert input power (e.g., 120VAC at 60 Hz) into proper voltage levels for appropriate transmitter and receiver operation." Please refer to Column 14, lines 1-4.

8. Exhibit A, attached hereto, lists the commercially available Integrated Chip components ("IC Components") that both Altstatt and Schotz identify in their respective designs. Datasheets identifying electrical current requirements to operate the IC Components are included in Exhibit B.

9. Alstatt cannot be combined with Schotz. However, even assuming such a combination is possible, the Altstatt's battery powered analog headphone system will suffer from a significantly reduced playtime due to the power consumption of Schotz's numerous integrated circuit components, as articulated in the calculation spreadsheet attached hereto as Exhibit C.

10. The "playtime" is defined as the time the invention can be operated continuously before the battery must be changed or recharged. The playtime calculation consists of simple unit conversions as defined in chapter one, problem 1.5 and solution set of well known Theodore S. Rappaport's Wireless Communications Principles & Practice textbook. The relevant pages from the textbook are attached herewith as Exhibit D.

According to Exhibit D, the formula for the playtime calculation is:

{((60minutes/1hour) x BmA-h)/[(60 minutes/hour x 24 hour/day)(sum of IC currents in mA)]} x (24hour/day)

where B is the battery current capacity.

11. As shown in Exhibit C, Altstatt's portable invention will yield a playtime greater than 10 hours when operated with a small battery having a current capacity of 50mA-h (50 milliamp-hours).

12. If we were to hypothetically apply the same 50mA-h battery capacity to operate Schotz's invention, Exhibit C further shows that the frequency hopping spread spectrum ("FHSS") system will operate for approximately six minutes, and the direct sequence spread spectrum ("DSSS") system will operate for approximately eleven

minutes before requiring a new battery or a recharged battery. Please note that the FHSS and DSSS system operations are constrained to the lowest device (transmitter or receiver) operation time.

Respectfully Submitted,

Date: 4/14/06

By: C. Earl Woolfork

SONY EXHIBIT 1005 – 0643

OIPE
JAN 29 2007
PATENT & TRADEMARK OFFICE

EXHIBIT A

US Patent Number:5,771,441 Issued to Altstatt

Number	Component Description	Reference
1	Transmitter,BA1404	column 5, lines 34-37
2	Receiver,TA7766AF	column 8, lines 54-58
3	Receiver,TA7792F	column 8, lines 54-58

US Patent Number:5,946,343 Issued to Schotz

1	Digital Signal Processor,DSP56002	column 14, lines 49-50
2	A/D converter,SAA7360	column 7, lines 11-12
3	Stereo Filter MPEG,SAA2520	column 14, lines 47-48
4	MPEG,SAA2521	column 14, lines 47-48
5	Modulator,RF2422	column 10, lines 17-18
6	Power Amplifier,TQ9132	column 10, lines 31-32
7	Phase Locked Loop,MC12210	column 10, lines 49-50
8	Voltage Controlled Oscillator,SMV2500	column 14, lines 51-53
9	Low Noise Amplifier,MGA86576	column 11, lines 16-18
10	Digital Interface Transmitter,CS8402	column 11, lines 31-33
11	Digital to Analog Converter,TDA1305T	column 13, lines 57-59
12	Clock Recovery & Timing,TRU-050	column 12, lines 28-29
13	Demodulator,RF2703	column 12, lines 13-15
14	Microprocessor,PIC16C55	column 6, lines 63-66
15	DSSS Transmitter,CYLINK SSTX	column 16, lines 62-64
16	DSSS Receiver,CYLINK Part#SPECTRE	column 18, lines 4-5
17	Mixer,IAM81008	column 11, lines 16-18
18	Channel Encoder/Decoder,SRT241203	column 9, lines 25-26
19	Interleaver/De-interleaver,SRT-24INT	column 9, lines 50-52
20	Optical Digital Receiver,HK-3131-01	column 7, lines 40-43
21	Optical Digital Transmitter,HK-3131-03	column 13, lines 15-17
22	Voltage Controlled Oscillator,M2 D300	column 8, lines 49-50

EXHIBIT B

US Patent Number:5,771,441 Issued to Altstatt

Item Number 1: Transmitter, BA1404

T-77-05-05

● ブロックダイアグラム/Block Diagram

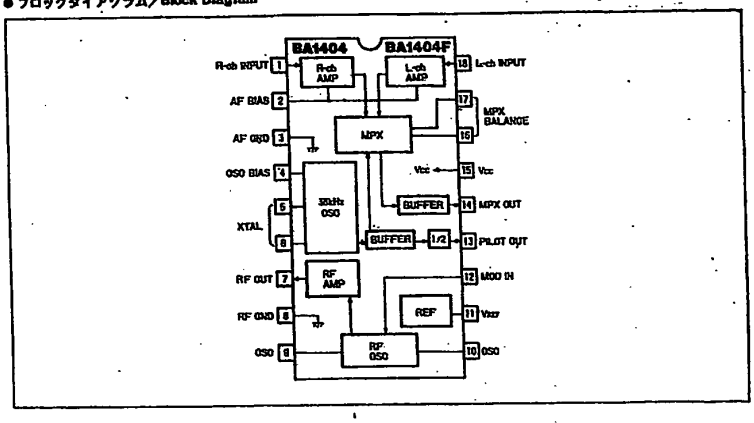

● 絶対最大定格/Absolute Maximum Ratings (Ta=25℃)

Parameter	Symbol	Limits	Unit
電源電圧	Vcc	2.5	V
許容損失	Pd	600*	mW
動作温度範囲	Topr	−25~75	℃
保存温度範囲	Tstg	−50~125	℃

*Ta=25℃以上で使用する場合は，1℃につき5mWを減じる

● 推奨動作条件/Recommended Operating Conditions (Ta=25℃)

Parameter	Symbol	Min.	Typ.	Max.	Unit
電源電圧	Vcc	1	1.25	2	V

● 電気的特性/Electrical Characteristics (Ta=25℃, Vcc=1.25V)

Parameter	Symbol	Min.	Typ.	Max.	Unit	Conditions
無信号時電流	Iq	0.5	3	6	mA	—
入力インピーダンス	Z_{IN}	380	540	720	Ω	f_{IN}=1kHz
入力利得	Gv	30	37	—	dB	V_{IN}=0.5mV
チャンネルバランス	CB	—	—	2	dB	V_{IN}=0.5mV
MPX最大出力電圧	V_{OM}	200	—	—	mV_{P-P}	THD≦3%
MPX 38kHzもれ	V_{OO}	—	1	—	mV	無信号時
パイロット出力電圧	V_{OP}	460	580	—	mV_{P-P}	無負荷時
チャンネルセパレーション	Sep	25	45	—	dB	基準周波数にて
入力換算雑音電圧	V_{NIN}	—	1	—	pV_{rms}	38kHz停止時 IHF−A
RF最大出力電圧	V_{OSO}	350	600	—	mV_{rms}	—

SONY EXHIBIT 1005 – 0645

ELECTRICAL CHARACTERISTICS (Unless otherwise specified, Ta = 25°C, V_{CC} = 1.5V, f_m = 1kHz)

CHARACTERISTIC		SYMBOL	TEST CIR-CUIT	TEST CONDITION		MIN.	TYP.	MAX.	UNIT
Supply Current		I_{CC}	—	At lamp off		—	0.8	1.6	mA
Input Resistance		R_{IN}	—			—	36	—	kΩ
Output Resistance		R_{OUT}	—			—	15	—	kΩ
Max. Composite Signal Input Voltage		V_{in} (MAX) (STEREO)	—	L + R = 90%, P = 10%, THD = 5% $SW_1 \rightarrow R_{LED}$ = 50kΩ SW_5 → LPF ON		—	250	—	mV_{rms}
Separation		Sep	—	L + R = 90mV_{rms} P = 10mV_{rms} $SW_1 \rightarrow R_{LED}$ = 50kΩ SW_5 → LPF ON	f_m = 100Hz	—	30	—	dB
					f_m = 1kHz	22	35	—	
					f_m = 10kHz	—	30	—	
Total Harmonic Distortion	Monaural	THD (MONAURAL)	—	V_{in} = 100mV_{rms} $SW_1 \rightarrow R_{LED}$ = 500Ω		—	0.2	1.5	%
	Stereo	THD (STEREO)		L + R = 90mV_{rms}, P = 10mV_{rms} $SW_1 \rightarrow R_{LED}$ = 50kΩ SW_5 → LPF ON		—	0.4	—	
Voltage Gain		G_V	—	V_{in} = 100mV_{rms} $SW_1 \rightarrow R_{LED}$ = 500Ω		-4	-2	1	dB
Channel Balance		CB	—	V_{in} = 100mV_{rms} $SW_1 \rightarrow R_{LED}$ = 500Ω		—	0	2.0	dB
Lamp ON Sensitivity		V_L (ON)	—	Pilot input	$SW_1 \rightarrow R_{LED}$ = 50kΩ	—	—	5	mV_{rms}
Lamp OFF Sensitivity		V_L (OFF)			$SW_1 \rightarrow R_{LED}$ = 500Ω	7	—	—	
Stereo Lamp Hysteresis		V_H	—	to turn-off from turn-on		—	3	—	mV_{rms}
Capture Range		CR	—	P = 10mV_{rms}		—	±3	—	%
Carrier Leak (Note)	19kHz	CL	—	L + R = 90mV_{rms} P = 10mV_{rms} $SW_1 \rightarrow R_{LED}$ = 50kΩ		—	30	—	dB
	38kHz					—	50	—	
SCA Rejection Ratio		SCA Rej	—	P = 10mV_{rms}, L + R = 80mV_{rms} SCA = 10mV_{rms}, f_{SCA} = 67kHz $SW_1 \rightarrow R_{LED}$ = 50kΩ		—	70	—	dB
Signal To Noise Ratio		S / N	—	V_{in} = 100mV_{rms}, R_g = 620Ω $SW_1 \rightarrow R_{LED}$ = 500Ω		—	65	—	dB

(Note) Carrier leak of 38kHz is only carrier.

MAXIMUM RATINGS (Ta = 25°C)

CHARACTERISTIC		SYMBOL	RATING	UNIT
Supply Voltage		V_{CC}	5	V
Power Dissipation	TA7792P	P_D (Note)	750	mW
	TA7792F		350	
Operating Temperature		T_{opr}	−25~75	°C
Storage Temperature		T_{stg}	−55~150	°C

(Note) Derated above Ta = 25°C in the proportion of 6mW/°C for TA7792P, and of 2.8mW/°C for TA7792F.

ELECTRICAL CHARACTERISTICS

Unless otherwise specified, Ta = 25°C, V_{CC} = 1.5V
FM : V_{in} = 60dBμV EMF, f = 83MHz, f_m = 1kHz, Δf = ±22.5kHz
AM : V_{in} = 60dBμV EMF, f = 1MHz, f_m = 1kHz, MOD = 30%

CHARACTERISTIC			SYMBOL	TEST CIRCUIT	TEST CONDITION	MIN.	TYP.	MAX.	UNIT
Supply Current			I_{CC} (FM)	1	V_{in} = 0	—	4.0	5.2	mA
			I_{CC} (AM)	1	V_{in} = 0	—	1.2	1.8	
FM	Input Limiting Voltage		V_{in} (lim)	1	−3dB limiting	—	10	16	dBμV EMF
	Total Harmonic Distortion		THD (FM)	1		—	0.25	—	%
	Signal To Noise Ratio		S/N (FM)	1		—	62	—	dB
	Quiescent Sensitivity		Q_S	1	S/N = 30dB	—	12	—	dBμV EMF
	AM Rejection Ratio		AMR	1	MOD = 30%	—	30	—	dB
	Oscillator Voltage		V_{osc}	2	f = 60MHz	53	90	135	mV_{rms}
	Oscillator Stop Supply Voltage		V_{stop} (FM)	1	V_{in} < −20dBμV EMF	—	0.85	0.95	V
	Recovered Output Voltage		V_{OD} (FM)	1		28	45	68	mV_{rms}
AM	Voltage Gain		G_V	1	V_{in} = 30dBμV EMF	14	25	50	mV_{rms}
	Recovered Output Voltage		V_{OD} (AM)	1		25	40	60	mV_{rms}
	Total Harmonic Distortion		THD (AM)	1		—	1.5	—	%
	Signal To Noise Ratio		S/N (AM)	1		—	40	—	dB
	Oscillator Stop Supply Voltage		V_{stop} (AM)	1	V_{in} < −20dBμV EMF	—	0.85	0.95	V
Output Resistance Pin⑧		FM	R_O (FM)	1	f = 1kHz	—	1.4	—	kΩ
		AM	R_O (AM)	1	f = 1kHz	—	8	—	

※ V_{in} : Open Display

DC ELECTRICAL CHARACTERISTICS

Table 2-3 DC Electrical Characteristics

Characteristics	Symbol	Min	Typ	Max	Units
Supply Voltage	V_{CC}	4.5	5.0	5.5	V
Input High Voltage •EXTAL •$\overline{\text{RESET}}$ • MODA, MODB, MODC • All other inputs	 V_{IHC} V_{IHR} V_{IHM} V_{IH}	 4.0 2.5 3.5 2.0	 — — — —	 V_{CC} V_{CC} V_{CC} V_{CC}	 V V V V
Input Low Voltage • EXTAL • MODA, MODB, MODC • All other inputs	 V_{ILC} V_{ILM} V_{IL}	 –0.5 –0.5 –0.5	 — — —	 0.6 2.0 0.8	 V V V
Input Leakage Current EXTAL, $\overline{\text{RESET}}$, MODA/$\overline{\text{IRQA}}$, MODB/$\overline{\text{IRQB}}$, MODC/$\overline{\text{NMI}}$, $\overline{\text{DR}}$, $\overline{\text{BR}}$, $\overline{\text{WT}}$, CKP, PINIT, $\overline{\text{MCBG}}$, $\overline{\text{MCBCLR}}$, MCCLK, D20IN	I_{IN}	–1	—	1	µA
Tri-state (Off-state) Input Current (@ 2.4 V/0.4 V)	I_{TSI}	–10	—	10	µA
Output High Voltage (I_{OH} = –0.4 mA)	V_{OH}	2.4	—	—	V
Output Low Voltage (I_{OL} = 3.0 mA) $\overline{\text{HREQ}}$ I_{OL} = 6.7 mA, TXD I_{OL} = 6.7 mA	V_{OL}	—	—	0.4	V
Internal Supply Current at 40 MHz[1] • In Wait mode[2] • In Stop mode[2]	I_{CCI} I_{CCW} I_{CCS}	— — —	90 12 2	105 20 95	mA mA µA
Internal Supply Current at 66 MHz[1] • In Wait mode[2] • In Stop mode[2]	I_{CCI} I_{CCW} I_{CCS}	— — —	95 15 2	130 25 95	mA mA µA
Internal Supply Current at 80 MHz[1] • In Wait mode[2] • In Stop mode[2]	I_{CCI} I_{CCW} I_{CCS}	— — —	115 18 2	160 30 95	mA mA µA
PLL Supply Current[3] • 40 MHz • 66 MHz • 80 MHz		 — — —	 1.0 1.1 1.2	 1.5 1.5 1.8	 mA mA mA
CKOUT Supply Current[4] • 40 MHz • 66 MHz • 80 MHz		 — — —	 14 28 34	 20 35 42	 mA mA mA
Input Capacitance[5]	C_{IN}	—	10	—	pF

Notes:
1. **Section 4 Design Considerations** describes how to calculate the external supply current.
2. In order to obtain these results all inputs must be terminated (i.e., not allowed to float).
3. Values are given for PLL enabled.
4. Values are given for CKOUT enabled.
5. Periodically sampled and not 100% tested

Table 1 Output data formats

ODF2	ODF1	MODE
0	0	test
0	1	format 1
1	0	format 2
1	1	I^2S

Reset

When pin $\overline{RESET}$ is held LOW the data outputs are set to zero. The $\overline{RESET}$ pin operates as a Schmitt trigger, enabling a power-on reset function by using an external RC circuit.

LIMITING VALUES

In accordance with the Absolute Maximum Rating System (IEC 134).

SYMBOL	PARAMETER	CONDITIONS	MIN.	MAX.	UNIT
V_{DDA}	analog supply voltage	note 1	−0.5	+6.5	V
V_I	DC input voltage		−0.5	+6.5	V
I_{IK}	DC input diode current		−	±20	mA
V_O	DC output voltage		−0.5	V_{DD} + 0.5	V
I_O	DC output source or sink current		−	±20	mA
I_{DD} or I_{SS}	total DC V_{DD} or V_{SS} current		−	±0.5	A
T_{amb}	operating ambient temperature		−40	+85	°C
T_{stg}	storage temperature		−65	+150	°C
V_{es}	electrostatic handling	note 2	−2000	+2000	V
		note 3	−200	+200	V

Notes

1. All V_{DD} and V_{SS} pins must be externally connected to the same power supply.
2. Equivalent to discharging a 100 pF capacitor via a 1.5 kΩ series resistor with a rise time of 15 ns.
3. Equivalent to discharging a 200 pF capacitor via a 2.5 µH series inductor.

CHARACTERISTICS

V_{DD} = 5 V; T_{amb} = 25 °C; $f_{xtal} = 256f_s$; f_s = 44.1 kHz; unless otherwise specified.

SYMBOL	PARAMETER	CONDITIONS	MIN.	TYP.	MAX.	UNIT
Supplies						
V_{DDA}	analog supply voltage		4.5	5.0	5.5	V
I_{DDA}	analog supply current		−	43	−	mA
V_{DDD}	digital supply voltage		4.5	5.0	5.5	V
I_{DDD}	digital supply current		−	50	−	mA
P_{tot}	total power consumption		−	465	−	mW

LIMITING VALUES

In accordance with the Absolute Maximum System (IEC 134).

SYMBOL	PARAMETER	CONDITIONS	MIN.	MAX.	UNIT
V_{DD}	supply voltage		−0.5	6.5	V
V_I	input voltage	note 1	−0.5	V_{DD} + 0.5	V
I_{SS}	supply current from V_{SS}		−	160	mA
I_{DD}	supply current in V_{DD}		−	160	mA
I_I	input current		−10	10	mA
I_O	output current		−20	20	mA
P_{tot}	total power dissipation		−	880	mW
T_{stg}	storage temperature range		−55	150	°C
T_{amb}	operating ambient temperature range		- 40	85	°C
V_{es1}	electrostatic handling	note 2	−1500	1500	V
V_{es2}	electrostatic handling	note 3	−70	70	V

Notes

1. Input voltage should not exceed 6.5 V unless otherwise specified
2. Equivalent to discharging a 100 pF capacitor through a 1.5 kΩ series resistor
3. Equivalent to discharging a 200 pF capacitor through a 0 Ω series resistor.

DC CHARACTERISTICS

T_{amb} = −40 to 85 °C; V_{DD} = 3.8 to 5.5 V unless otherwise specified.

SYMBOL	PARAMETER	CONDITIONS	MIN.	TYP.	MAX.	UNIT
Supply						
V_{DD}	supply voltage range		3.8	5.0	5.5	V
I_{DD}	operating current	V_{DD} = 5 V (note 1)	−	82	110	mA
I_{DD}	operating current	V_{DD} = 3.8 V (note 1)	−	58	80	mA
Inputs URDA, SBDIR, SBEF, LTCLK, LTCNT0, LTNCT1, X22IN, X24IN						
V_{IH}	HIGH level input voltage		0.7V_{DD}	−	−	V
V_{IL}	LOW level input voltage		−	−	0.3V_{DD}	V
$-I_I$	input current	V_i = 0 V; T_{amb} = 25 °C	−	−	10	µA
$+I_I$	input current	V_i = 5.5 V; T_{amb} = 25 °C	−	−	10	µA
Inputs PWRDWN, LTENA						
V_{IH}	HIGH level input voltage		0.7V_{DD}	−	−	V
V_{IL}	LOW level input voltage		−	−	0.3V_{DD}	V
$+I_I$	input current	V_i = V_{DD}; T_{amb} = 25 °C	40	−	250	µA

DC CHARACTERISTICS

V_{DD} = 3.8 to 5.5 V; T_{amb} = −40 to 85 °C; unless otherwise specified.

SYMBOL	PARAMETER	CONDITIONS	MIN.	TYP.	MAX.	UNIT
Supply						
V_{DD}	supply voltage range		3.8	5	5.5	V
I_{DD}	operating current	V_{DD} = 3.8 V	–	15	30	mA
I_{DD}	operating current	V_{DD} = 5 V	–	25	50	mA
I_{PWRDWN}	stand-by current	in power-down mode	–	100	–	µA
Inputs						
V_{IL}	LOW level input voltage		0	–	0.3 V_{DD}	V
V_{IH}	HIGH level input voltage		0.7 V_{DD}	–	V_{DD}	V
I_I	input current		–	–	10	µA
Outputs						
V_{OL}	LOW level output voltage	note 1	–	–	0.4	V
V_{OH}	HIGH level output voltage	note 1	V_{DD} − 0.5	–	–	V
3-state outputs						
I_{oz}	OFF state current	V_i = 0 to 5.5 V	–	–	10	µA

Note

1. Maximum load current for LTDATA, LTCNT1C, LTCNT0C, LTENC, LTCLKC, TEST1, TEST2, FDAC, FDAF = 2 mA; for LTDATAC = 3 mA.

Item Number 5: Modulator, RF2422

RF2422

Absolute Maximum Ratings

Parameter	Rating	Unit
Supply Voltage	-0.5 to +7.5	V_{DC}
Input LO and RF Levels	+10	dBm
Operating Ambient Temperature	-40 to +85	°C
Storage Temperature	-40 to +150	°C

Caution! ESD sensitive device.

RF Micro Devices believes the furnished information is correct and accurate at the time of this printing. However, RF Micro Devices reserves the right to make changes to its products without notice. RF Micro Devices does not assume responsibility for the use of the described product(s).

Parameter	Specification			Unit	Condition
	Min.	Typ.	Max.		
Carrier Input					T=25°C, V_{CC}=5V
Frequency Range	800		2500	MHz	
Power Level	-6		+6	dBm	
Input VSWR		5:1			At 900MHz
		1.8:1			At 1800MHz
		1.2:1			At 2500MHz
Modulation Input					
Frequency Range	DC		250	MHz	
Reference Voltage (V_{REF})	2.0	3.0		V	
Maximum Modulation (I&Q)			V_{REF}±1.0	V	
Gain Asymmetry		0.2		dB	
Quadrature Phase Error		3		°	
Input Resistance		30		kΩ	
Input Bias Current			40	µA	
RF Output					LO=2GHz and -5dBm, I&Q=2.0V_{PP} SSB
Output Power	-3		+3	dBm	
Output Impedance		50		Ω	
Output VSWR		3.5:1			At 900MHz
		1.3:1			At 2000MHz
		1.15:1			At 2500MHz
Harmonic Output	-30	-35		dBc	
Sideband Suppression	25	35		dB	
Carrier Suppression	30	35		dB	
IM_3 Suppression	30	35		dB	Intermodulation of the carrier and the desired RF signal
	25	30		dB	Intermodulation of baseband signals
Broadband Noise Floor					At 20MHz offset, V_{CC}=5V. Tied to V_{REF}: ISIG, QSIG, IREF, and QREF.
		-145		dBm/Hz	At 850MHz
		-152		dBm/Hz	At 1900MHz
Power Down					
Turn On/Off Time			100	ns	
PD Input Resistance	50			kΩ	
Power Control "ON"			2.8	V	Threshold voltage
Power Control "OFF"	1.0	1.2		V	Threshold voltage
Power Supply					
Voltage		5		V	Specifications
	4.5		6.0	V	Operating Limits
Current		45	50	mA	Operating
			25	µA	Power Down

SONY EXHIBIT 1005 – 0652

TriQuint SEMICONDUCTOR
WIRELESS COMMUNICATIONS DIVISION

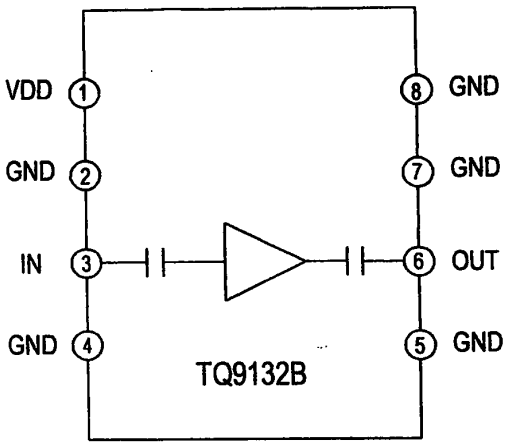

TQ9132B

DATA SHEET

3V Cellular TDMA/AMPS Power Amplifier IC

Features

- *Single 3V- 6V supply*
- *Wide frequency range*
- *+17 dBm output power*
- *Input and output matched to 50 Ω*
- *SO-8 surface mount plastic package*

Applications

- *Power Amplifier drivers*
- *PCN Medium-power amplifiers*
- *Medium-power WLANs*
- *CDPD Modems*
- *Base Station receivers*

Product Description

The TQ9132B amplifier is an 800-2500 MHz amplifier capable of providing moderate output power (50 mW) for a wide variety of transmit and receive applications. The amplifier's input and output are matched to 50 Ω with internal circuitry, simplifying interfaces to 50 Ω systems. In addition, DC blocking capacitors are included on chip, permitting direct connections to the input and output. Its 8-pin surface mount package and low cost are well suited to many wireless communications applications.

Electrical Specifications[1]

Parameter	*Min*	*Typ*	*Max*	*Units*
Gain	13.5	16		dB
Output 1 dB Gain Compression	15.5	17		dBm
Input Return Loss		12		dB
Output Return Loss		12		dB
DC Supply Current		85	100	MA

Note 1: Test Conditions: V_{DD} = 5.0 V, Freq. = 2500 MHz, T_A= 25° C.

Note 2: . Min/max values 100% production tested

ELECTRICAL CHARACTERISTICS (V_{CC} = 2.7 to 5.5 V; T_A = –40 to +85°C, unless otherwise noted.)

Parameter	Symbol	Min	Typ	Max	Unit	Condition
Supply Current for V_{CC}	I_{CC}	–	8.8	13.0	mA	Note 1
		–	10.2	16.0		Note 2
Supply Current for V_P	I_P	–	0.7	1.1	mA	Note 3
		–	0.8	1.3		Note 4
Operating Frequency f_{IN}max f_{IN}min	F_{IN}	2500 –	– –	– 500	MHz	Note 5
Operating Frequency (OSCin)	F_{OSC}	–	12	20	MHz	Crystal Mode
		–	–	40	MHz	External Reference Mode
Input Sensitivity f_{IN}	V_{IN}	200	–	1000	mVpp	
OSCin	V_{OSC}	500	–	2200	mVpp	
Input HIGH Voltage CLK, DATA, LE, FC	V_{IH}	0.7 V_{CC}	–	–	V	
Input LOW Voltage CLK, DATA, LE, FC	V_{IL}	–	–	0.3 V_{CC}	V	V_{CC} = 5.5 V
Input HIGH Current (DATA and CLK)	I_{IH}	–	1.0	2.0	µA	V_{CC} = 5.5 V
Input LOW Current (DATA and CLK)	I_{IL}	–10	–5.0	–	µA	V_{CC} = 5.5 V
Input Current (OSCin)	I_{OSC}	– –	130 –310	– –	µA	OSCin = V_{CC} OSCin = V_{CC} – 2.2 V
Input HIGH Current (LE and FC)	I_{IH}	–	1.0	2.0	µA	
Input LOW Current (LE and FC)	I_{IL}	–75	–60	–	µA	
Charge Pump Output Current	I_{Source}[6]	–2.6	–2.0	–1.4	mA	V_{Do} = V_p/2; V_p = 2.7 V
Do and BISW	I_{Sink}[6]	+1.4	+2.0	+2.6		V_{BISW} = V_p/2; V_p = 2.7 V
	I_{Hi-Z}	–15	–	+15	nA	0.5< V_{DO} < V_p – 0.5 0.5 < V_{BISW} < V_p – 0.5
Output HIGH Voltage (LD, ϕR, ϕP, f_{OUT})	V_{OH}	4.4	–	–	V	V_{CC} = 5.0 V
		2.4	–	–	V	V_{CC} = 3.0 V
Output LOW Voltage (LD, ϕR, ϕP, f_{OUT})	V_{OL}	–	–	0.4	V	V_{CC} = 5.0 V
		–	–	0.4	V	V_{CC} = 3.0 V
Output HIGH Current (LD, ϕR, ϕP, f_{OUT})	I_{OH}	–1.0	–	–	mA	
Output LOW Current (LD, ϕR, ϕP, f_{OUT})	I_{OL}	1.0	–	–	mA	

1. V_{CC} = 3.3 V, all outputs open.
2. V_{CC} = 5.5 V, all outputs open.
3. V_P = 3.3 V, all outputs open.
4. V_p = 6.0 V, all outputs open.
5. AC coupling, F_{IN} measured with a 1000 pF capacitor.
6. Source current flows out of the pin and sink current flows into the pin.

Figure 8. Typical External Charge Pump Circuit

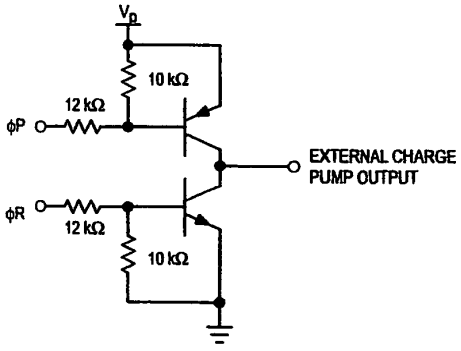

Figure 9. Typical Lock Detect Circuit

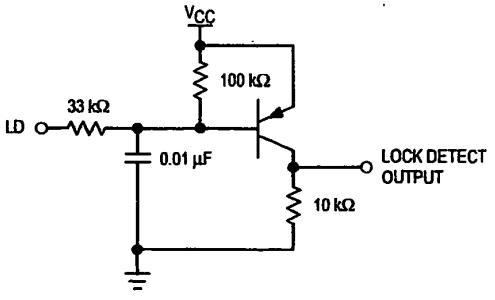

US Patent Number:5,946,343 Issued to Schotz

Item Number 8: Voltage Controlled Oscillator, SMV2500

Z-Communications, Inc.
9939 Via Pasar • San Diego, CA 92126
TEL (619) 621-2700 FAX (619) 621-2722

SMV2500L

VOLTAGE CONTROLLED OSCILLATOR

Rev E5

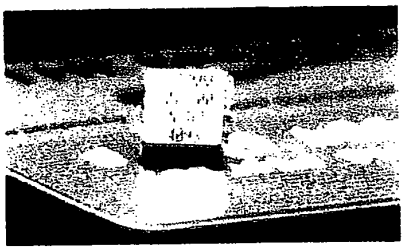

PHASE NOISE (1 Hz BW, typical)

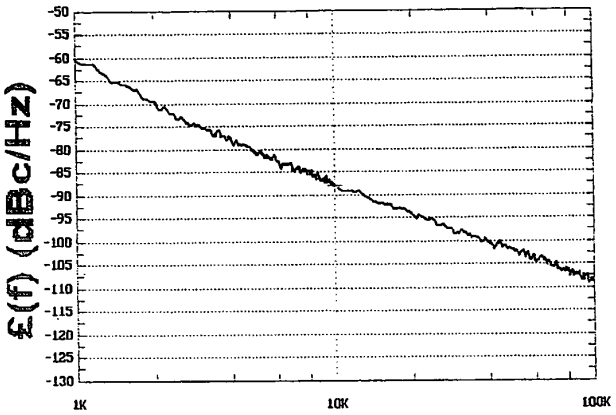

FEATURES

- Frequency Range: 2400 - 2484 MHz
- Tuning Voltage: 0-3 Vdc
- SUB-L - Style Package

APPLICATIONS

- Personal Communications Systems
- WLAN
- Portable Radios

PERFORMANCE SPECIFICATIONS	VALUE	UNITS
Oscillation Frequency Range	2400 - 2484	MHz
Phase Noise @ 10 kHz offset (1 Hz BW, typ.)	-87	dBc/Hz
Harmonic Suppression (2nd, typ.)	-20	dBc
Tuning Voltage	0-3	Vdc
Tuning Sensitivity (avg.)	105	MHz/V
Power Output	9.25±2.75	dBm
Load Impedance	50	Ω
Input Capacitance (max.)	50	pF
Pushing	<30	MHz/V
Pulling (14 dB Return Loss, Any Phase)	<25	MHz
Operating Temperature Range	-40 to 85	°C
Package Style	SUB-L	
POWER SUPPLY REQUIREMENTS		
Supply Voltage (Vcc, nom.)	3	Vdc
Supply Current (Icc, typ.)	19	mA

All specifications are typical unless otherwise noted and subject to change without notice.

APPLICATION NOTES

- AN-100/1 : Mounting and Grounding of VCOs
- AN-102 : Proper Output Loading of VCOs
- AN-107 : How to Solder Z-COMM VCOs

NOTES:

© Z-Communications, Inc.

All rights reserved

SONY EXHIBIT 1005 – 0655

Absolute Maximum Ratings

Symbol	Parameter	Units	Absolute Maximum[1]
V_d	Device Voltage, RF output to ground	V	9
V_g	Device Voltage, RF input to ground	V	+0.5 -1.0
P_{in}	CW RF Input Power	dBm	+13
T_{ch}	Channel Temperature	°C	150
T_{STG}	Storage Temperature	°C	-65 to 150

Thermal Resistance[2]:
$\theta_{ch-c} = 110°C/W$

Notes:
1. Operation of this device above any one of these limits may cause permanent damage.
2. $T_c = 25°C$ (T_c is defined to be the temperature at the package pins where contact is made to the circuit board).

MGA-86576 Electrical Specifications, $T_C = 25°C$, $Z_o = 50\,\Omega$, $V_d = 5\,V$

Symbol	Parameters and Test Conditions		Units	Min.	Typ.	Max.
Gp	Power Gain ($\|S_{21}\|^2$)	f = 1.5 GHz	dB		21.2	
		f = 2.5 GHz			23.7	
		f = 4.0 GHz		20	23.1	
		f = 6.0 GHz			19.3	
		f = 8.0 GHz			15.4	
NF_{50}	50 Ω Noise Figure	f = 1.5 GHz	dB		2.2	
		f = 2.5 GHz			1.9	
		f = 4.0 GHz			2.0	2.3
		f = 6.0 GHz			2.3	
		f = 8.0 GHz			2.5	
NF_o	Optimum Noise Figure (Input tuned for lowest noise figure)	f = 1.5 GHz	dB		1.6	
		f = 2.5 GHz			1.5	
		f = 4.0 GHz			1.6	
		f = 6.0 GHz			1.8	
		f = 8.0 GHz			2.1	
P_{1dB}	Output Power at 1 dB Gain Compression	f = 1.5 GHz	dBm		6.4	
		f = 2.5 GHz			7.0	
		f = 4.0 GHz			6.3	
		f = 6.0 GHz			4.3	
		f = 8.0 GHz			3.8	
IP_3	Third Order Intercept Point	f = 4.0 GHz	dBm		16.0	
VSWR	Input VSWR	f = 1.5 GHz			3.6:1	
		f = 2.5 GHz			3.3:1	
		f = 4.0 GHz			2.2:1	3.6:1
		f = 6.0 GHz			1.4:1	
		f = 8.0 GHz			1.2:1	
	Output VSWR	f = 1.5 GHz			2.5:1	
		f = 2.5 GHz			2.1:1	
		f = 4.0 GHz			1.7:1	
		f = 6.0 GHz			1.4:1	
		f = 8.0 GHz			1.3:1	
I_d	Device Current		mA	9	16	22

ABSOLUTE MAXIMUM RATINGS (GND = 0V, all voltages with respect to ground.)

Parameter		Symbol	Min	Max	Units
DC Power Supply		VD+		6.0	V
Input Current, Any Pin Except Supply	Note 1	I_{in}	-	±10	mA
Digital Input Voltage		V_{IND}	-0.3	VD+	V
Ambient Operating Temperature (power applied)		T_A	-55	125	°C
Storage Temperature		T_{stg}	-65	150	°C

Notes: 1. Transient currents of up to 100 mA will not cause SCR latch-up.

WARNING: Operation at or beyond these limits may result in permanent damage to the device. Normal operation is not guaranteed at these extremes.

RECOMMENDED OPERATING CONDITIONS

(GND = 0V; all voltages with respect to ground)

Parameter			Symbol	Min	Typ	Max	Units
DC Voltage			VD+	4.5	5.0	5.5	V
Supply Current		Note 2	I_{DD}		1.5	5	mA
Ambient Operating Temperature:	CS8401/2A-CP or -CS	Note 3	T_A	0	25	70	°C
	CS8401/2A-IP or -IS			-40		85	°C
Power Consumption		Note 2	P_D		7.5	25	mW

Notes: 2. Drivers open (unloaded). The majority of power is used in the load connected to the drivers.
3. The '-CP' and '-CS' parts are specified to operate over 0 to 70 °C but are tested at 25 °C only. The '-IP' and '-IS' parts are tested over the full -40 to 85 °C temperature range.

DIGITAL CHARACTERISTICS

(T_A = 25 °C for suffixes 'CP' & 'CS', T_A = -40 to 85 °C for 'IP' & 'IS'; VD+ = 5V ± 10%)

Parameter			Symbol	Min	Typ	Max	Units
High-Level Input Voltage			V_{IH}	2.0		V_{DD}+0.3	V
Low-Level Input Voltage			V_{IL}	-0.3		+0.8	V
High-Level Output Voltage	(I_O = 200µA)		V_{OH}	V_{DD}-1.0			V
Low-Level Output Voltage	(I_O = 3.2mA)		V_{OL}			0.4	V
Input Leakage Current			I_{in}		1.0	10	µA
Master Clock Frequency:	CS8401A	Note 4	MCK			22	MHz
	CS8402A	Note 4				7.1	MHz
Master Clock Duty Cycle	CS8401/2A			40		60	%

Notes: 4. MCK for the CS8401 must be 128, 192, 256, or 384x the input word rate based on M0 and M1 in control register 2. MCK for the CS8402A must be 128x the input word rate, except in Transparent Mode where MCK is 256x the input word rate.

Specifications are subject to change without notice.

QUICK REFERENCE DATA

SYMBOL	PARAMETER	CONDITIONS	MIN.	TYP.	MAX.	UNIT
V_{DDD}	digital supply voltage	note 1	3.4	5.0	5.5	V
V_{DDA}	analog supply voltage	note 1	3.4	5.0	5.5	V
V_{DDO}	operational amplifier supply voltage	note 1	3.4	5.0	5.5	V
I_{DDD}	digital supply current	V_{DDD} = 5 V; at code 00000H	–	30	–	mA
I_{DDA}	analog supply current	V_{DDA} = 5 V; at code 00000H	–	5.5	8	mA
I_{DDO}	operating amplifier supply current	V_{DDO} = 5 V; at code 00000H	–	6.5	9	mA
$V_{FS(rms)}$	full-scale output voltage (RMS value)	$V_{DDD} = V_{DDA} = V_{DDO}$ = 5 V	1.425	1.5	1.575	V
(THD + N)/S	total harmonic distortion plus noise-to-signal ratio	at 0 dB signal level	–	–90	–81	dB
			–	0.003	0.009	%
		at –60 dB signal level	–	–44	–40	dB
			–	0.63	0.1	%
		at –60 dB signal level; A-weighted	–	–46	–	dB
			–	0.5	–	%
S/N	signal-to-noise ratio at bipolar zero	A-weighting; at code 00000H	100	108	–	dB
BR_{ns}	input bit rate at data input	f_s = 48 kHz; normal speed	–	–	3.072	Mbits
BR_{ds}	input bit rate at data input	f_s = 48 kHz; double speed	–	–	6.144	Mbits
f_{sys}	system clock frequency		6.4	–	18.432	MHz
TC_{FS}	full scale temperature coefficient at analog outputs (VOL and VOR)		–	$\pm 100 \times 10^{-6}$	–	
T_{amb}	operating ambient temperature		–30	–	+85	°C

Note

1. All V_{DD} and V_{SS} pins must be connected to the same supply.

Parameter	Symbol	Min	Max	Unit
Input NRZ Data Rates	DATAIN	0.008	65.536	MHz
Input RZ Data and Clock Rates [1]	DATAIN	0.008	32.768	MHz
Nominal Output Frequency				
Output 1	OUT1	12.0	65.536	MHz
Output 2 [2]	OUT2	0.05	32.768	MHz
Supply Voltage [3]	V_{DD}	4.5	5.5	V
Supply Current (V_{DD} = 5.5 V)	I_{DD}	25	63	mA
Output Voltage Levels (V_{DD} = 4.5 V)				
Output Logic High [4]	V_{OH}	2.5	-	V
Output Logic Low [4]	V_{OL}	-	0.5	V
Transition Times: [4]				
Rise Time (0.5 V to 2.5 V)	t_R	0.5	5	ns
Fall Time (2.5 V to 0.5 V)	t_F	0.5	5	ns
Symmetry or Duty cycle [5]				
Output 1	SYM 1	40	60	%
Output 2	SYM 2	45	55	%
Recovered Clock	R_{CLK}	40	60	%
Input Data				
Input Logic High	V_{IH}	2.0	-	V
Input Logic Low	V_{IL}	-	0.8	V
Control Voltage Bandwith (-3 dB,VC = 2.50 V)	BW	50	-	kHz
Sensitivity @ VC = VO	$\Delta F/\Delta V_C$	See Figure 11		ppm/V
Loss of Signal Indication [6]	L_{OS}			
Output Logic High	V_{OH}	2.5	-	V
Output Logic Low	V_{OL}	-	0.5	V
Nominal Output Frequency on Loss of Signal: [7]				
Output 1	OUT1	-75 ppm	75 ppm	ppm from fo 1
Output 2	OUT2	-75 ppm	75 ppm	ppm from fo 2
Phase Detector Gain	K_D	-0.53 x Data Density		V/rad

Table 1.

1. For input RZ data, Manchester encoded data, and input clock recovery applications, the output clock must run at two times the input rate to ensure that the input is clocked correctly. Since the output clock has a maximum frequency of 65.536 MHz, these inputs are limited to a maximum rate of 32.768 MHz.
2. OUT2 is a binary submultiple of OUT1, or it may be disabled.
3. A 3.3 volt supply option is also available.
4. Figure 1 defines these parameters. Figure 2 illustrates the equivalent five-gate MTTL load and operating conditions under which these parameters are specified and tested.
5. Symmetry is the ON TIME/PERIOD in percent with V_S = 1.4 V for TTL, per figure 1.
6. A loss of signal (LOS) indicator is set to a logic high if no transitions are detected at DATAIN after 256 clock cycles. As soon as a transition occurs at DATAIN, LOS is set to a logic low.
7. Accuracy at room temperature. Stability over temperature is typically ± 20 ppm.

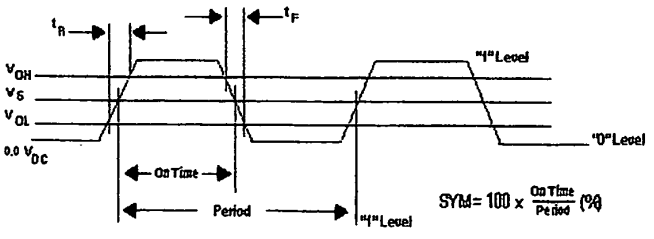

Figure 1.

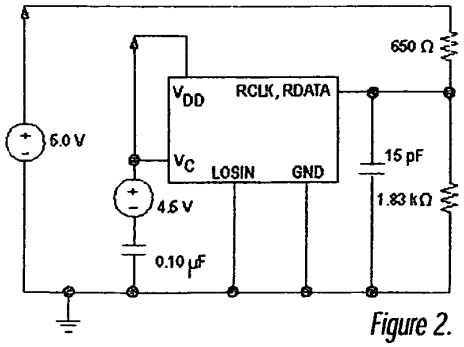

Figure 2.

Vectron International 267 Lowell Road, Hudson, NH 03051 Tel: 1-88-VECTRON-1 e-mail: vectron@vectron.com

SONY EXHIBIT 1005 – 0659

RF2703

Absolute Maximum Ratings

Parameter	Rating	Unit
Supply Voltage	-0.5 to 7.0	V_{DC}
IF Input Level	500	mV_{PP}
Operating Ambient Temperature	-40 to +85	°C
Storage Temperature	-40 to +150	°C

Caution! ESD sensitive device.

RF Micro Devices believes the furnished information is correct and accurate at the time of this printing. However, RF Micro Devices reserves the right to make changes to its products without notice. RF Micro Devices does not assume responsibility for the use of the described product(s).

Parameter	Specification			Unit	Condition
	Min.	Typ.	Max.		
Overall					T=25°C, V_{CC}=3.0V, IF=100MHz, LO=200MHz, F_{MOD}=500kHz
IF Frequency Range		0.1 to 250		MHz	For IF frequencies below ~2.5MHz, the LO should be a square wave. IF frequencies lower than 100kHz are attainable if the LO is a square wave and sufficiently large DC blocking capacitors are used.
Baseband Frequency Range		DC to 50		MHz	
Input Impedance		1200 || 1pF		Ω	Each input, single-ended
LO					
Frequency					Twice (2x) the IF frequency. For IF frequencies below ~2.5MHz, the LO should be a square wave. IF frequencies lower than 100kHz are attainable if the LO is a square wave and sufficiently large DC blocking capacitors are used.
Level		0.06 to 1		V_{PP}	
Input Impedance		500 || 1pF		Ω	
Demodulator Configuration					IF_{IN}=28mVpp, LO=200mVpp, Z_{LOAD}=10kΩ
Output Impedance		50 || 1pF		Ω	Each output, I_{OUT} and Q_{OUT}
Maximum Output		1.4		V_{PP}	Saturated
Voltage Gain		20		dB	V_{CC}=3.0V
	22.5	24	25.1	dB	V_{CC}=5.0V
Noise Figure		24		dB	Single Sideband. IF Input of device reactively matched
		35		dB	Single Sideband. 50Ω shunt resistor at IF Input
Input Third Order Intercept Point (IIP_3)		-22		dBm	V_{CC}=3.0V, IF Input of device reactively matched
		-11		dBm	V_{CC}=3.0V, 50Ω shunt resistor at IF Input
		-19			V_{CC}=5.0V, IF Input of device reactively matched
		-8		dBm	V_{CC}=5.0V, 50Ω shunt resistor at IF Input
		-28		dBm	V_{CC}=5.0V, IF Input of device reactively matched, Z_{LOAD}=50Ω
I/Q Amplitude Balance		0.1	0.5	dB	
Quadrature Phase Error		<±1		°	
DC Output		800		mV	V_{CC}=3.0V, I_{OUT} and Q_{OUT} to GND
	2.0	2.4	2.8	V	V_{CC}=5.0V, I_{OUT} and Q_{OUT} to GND
DC Offset		<10	60	mV	I_{OUT} to Q_{OUT}

7 QUADRATURE DEMODULATORS

SONY EXHIBIT 1005 – 0660

Modulator Configuration					IF_{IN}=28mV_{PP}, LO=200mV_{PP}. Z_{LOAD}=1200Ω
Maximum Output		200		mV_{PP}	Saturated
Input Voltage		90		mV_{PP}	Single Sideband, 1dB Gain Compression.
Voltage Gain		6		dB	Single Sideband
I/Q Amplitude Balance		0.1		dB	
Quadrature Phase Error		<±1		°	
Carrier Suppression		25		dBc	Unadjusted. Carrier Suppression may be optimized further by adjusting the DC offset level between the A and B inputs.
Sideband Suppression		30		dBc	
Power Supply					
Voltage		2.7 to 6		V	Operating limits
Current		8		mA	V_{CC}=3.0V
	8	10	12	mA	V_{CC}=5.0V

12.1 DC Characteristics: PIC16C54/55/56/57-RC, XT, 10, HS, LP (Commercial)

PIC16C54/55/56/57-RC, XT, 10, HS, LP (Commercial)			Standard Operating Conditions (unless otherwise specified) Operating Temperature 0°C ≤ TA ≤ +70°C for commercial				
Param No.	**Symbol**	**Characteristic/Device**	**Min**	**Typ†**	**Max**	**Units**	**Conditions**
D001	VDD	**Supply Voltage**					
		PIC16C5X-RC	3.0	—	6.25	V	
		PIC16C5X-XT	3.0	—	6.25	V	
		PIC16C5X-10	4.5	—	5.5	V	
		PIC16C5X-HS	4.5	—	5.5	V	
		PIC16C5X-LP	2.5	—	6.25	V	
D002	VDR	**RAM Data Retention Voltage**(1)		1.5*	—	V	Device in SLEEP Mode
D003	VPOR	**VDD Start Voltage** to ensure Power-on Reset		VSS	—	V	See Section 5.1 for details on Power-on Reset
D004	SVDD	**VDD Rise Rate** to ensure Power-on Reset	0.05*	—	—	V/ms	See Section 5.1 for details on Power-on Reset
D010	IDD	**Supply Current**(2)					
		PIC16C5X-RC(3)	—	1.8	3.3	mA	FOSC = 4 MHz, VDD = 5.5V
		PIC16C5X-XT	—	1.8	3.3	mA	FOSC = 4 MHz, VDD = 5.5V
		PIC16C5X-10	—	4.8	10	mA	FOSC = 10 MHz, VDD = 5.5V
		PIC16C5X-HS	—	4.8	10	mA	FOSC = 10 MHz, VDD = 5.5V
		PIC16C5X-HS	—	9.0	20	mA	FOSC = 20 MHz, VDD = 5.5V
		PIC16C5X-LP	—	15	32	µA	FOSC = 32 kHz, VDD = 3.0V, WDT disabled
D020	IPD	**Power-down Current**(2)	—	4.0	12	µA	VDD = 3.0V, WDT enabled
			—	0.6	9	µA	VDD = 3.0V, WDT disabled

* These parameters are characterized but not tested.

† Data in "Typ" column is based on characterization results at 25°C. This data is for design guidance only and is not tested.

Note 1: This is the limit to which VDD can be lowered in SLEEP mode without losing RAM data.

2: The supply current is mainly a function of the operating voltage and frequency. Other factors such as bus loading, oscillator type, bus rate, internal code execution pattern and temperature also have an impact on the current consumption.

a) The test conditions for all IDD measurements in active Operation mode are: OSC1 = external square wave, from rail-to-rail; all I/O pins tristated, pulled to VSS, T0CKI = VDD, $\overline{MCLR}$ = VDD; WDT enabled/disabled as specified.

b) For standby current measurements, the conditions are the same, except that the device is in SLEEP mode. The power-down current in SLEEP mode does not depend on the oscillator type.

3: Does not include current through REXT. The current through the resistor can be estimated by the formula: IR = VDD/2REXT (mA) with REXT in kΩ.

© 2002 Microchip Technology Inc.

SONY EXHIBIT 1005 – 0662

US Patent Number:5,946,343 Issued to Schotz

Item Number 15: DSSS Transmitter, CYLINK SSTX

NO DATASHEET

SONY EXHIBIT 1005 – 0663

US Patent Number:5,946,343 Issued to Schotz

Item Number 16: DSSS Receiver, CYLINK Part# SPECTRE

NO DATASHEET

SONY EXHIBIT 1005 – 0664

US Patent Number:5,946,343 Issued to Schotz

Item Number 17: Mixer, IAM81008

NO DATASHEET

SONY EXHIBIT 1005 – 0665

US Patent Number:5,946,343 Issued to Schotz

Item Number 18: Channel Encoder/Decoder, SRT241203

NO DATASHEET

SONY EXHIBIT 1005 – 0666

US Patent Number:5,946,343 Issued to Schotz

Item Number 19: Interleaver/De-interleaver, SRT-24INT

NO DATASHEET

SONY EXHIBIT 1005 – 0667

US Patent Number:5,946,343 Issued to Schotz

Item Number 20: Optical Digital Receiver, HK-3131-01

NO DATASHEET

SONY EXHIBIT 1005 – 0668

US Patent Number:5,946,343 Issued to Schotz

Item Number 21: Optical Digital Transmitter, HK-3131-03

NO DATASHEET

SONY EXHIBIT 1005 – 0669

US Patent Number:5,946,343 Issued to Schotz

Item Number 22: Voltage Controlled Oscillator, M2 D300

NO DATASHEET

SONY EXHIBIT 1005 – 0670

EXHIBIT C

NOTE : A=Altstatt S=Schotz FHSS=Frequency Hopping Spread Spectrum w=with Tx=transmitter

System	Part	SupplyCurrent (in mA)	Size (in inches)	Playtime	Note
					Altstatt's Tx
A(Tx)	BA1404	3	18-pin 0.44 x 0.30		FM Stereo Transmitter
				16+ hours	Tx continuous operation time
S(Tx w SS)	DSP56002	90	144-pin 0.78 x 0.78		Schotz FHSS Tx
	>PLL	1	N/A		PLL located inside DSP56002
	>ckout	14	N/A		ckout located inside DSP56002
	SAA7360		44-pin 0.50 x 0.50		A/D converter
	>analog	43			function of the A/D converter
	>digital	50			function of the A/D converter
	SAA2520	82	44-pin 0.55 x 0.55		Stereo Filter MPEG
	SAA2521	25	44-pin 0.55 x 0.55		MPEG
	RF2422	45	16-pin 0.39 x 0.24		Modulator
	TQ9132	85	8-pin 0.19 x 0.23		Power Amp
	MC12210	10.2	16-pin 0.39 x 0.24		PLL
	SMV2500	19	12-pin 0.28 x 0.28		VCO
	HK-3131-01	no data	no data		Optical Digital Rcvr (*)
	M2 D300	no data	no data		VCO (*)
	SRT241203	no data	no data		FEC (*)
	SRT-24INT	no data	no data		Interleaver (*)
				0.1 hours or 6+ minutes	

A(Tx) equation in hours:

{(60x50mA-minutes)/[(60 minutes/hour x 24 hour/day)(3mA)]} x (24hour/day) = 16.6 hours

S(Tx w SS) equation in hours:

{(60x50mA-min.)/[(60 min./hrx24 hr/day)(90+1+14+43+50+82+25+45+85+10.2+19mA)]}x(24hr/day)=6.4min

where min = minutes and hr = hours

(*) = Unable to locate datasheet for integrated chip (IC) referenced by Schotz

SONY EXHIBIT 1005 – 0671

NOTE : A=Altstatt S=Schotz FHSS=Frequency Hopping Spread Spectrum w=with Rx=Receiver

System	Part	SupplyCurrent (in mA)	Size (in inches)	Playtime	Note
					Altstatt's Rx
A(Rx)	TA7792	4	16-pin 0.77 x 0.30		AM/FM Tuner System
	TA7766A	0.8	18-pin 0.44 x 0.30		FM PLL
				10+ hours	Rx continuous operation time
S(Rx w SS)	DSP56002	90	144-pin 0.78 x 0.78		Schotz FHSS Rx
	>PLL	1	N/A		PLL located inside DSP56002
	>ckout	14	N/A		ckout located inside DSP56002
	MGA86576	16	4-pin 0.20 x 0.07		LNA
	HK-3131-03	no data	no data		Optical Digital Tx (*)
	CS8402	1.5	28-pin 1.20 x 0.20		Digital Interface Tx
	SAA2520	82	44-pin 0.55 x 0.55		Stereo Filter MPEG
	TDA1305T	42	28-pin 0.70 x 0.40		DAC
	TRU-050	63	16-pin 0.80 x 0.30		Clock Recovery and Timing
	RF2703	10	14-pin 0.34 x 0.24		Demodulator
	MC12210	10.2	16-pin 0.39 x 0.24		PLL
	SMV2500	19	12-pin 0.28 x 0.28		VCO
	SRT241203	no data	no data		FEC (*)
	SRT-24INT	no data	no data		De-interleaver (*)
	IAM81008	no data	no data		Mixer (*)
				0.14 hours or 8+ minutes	

A(Rx) equation in hours:

{(60x50mA-minutes)/[(60 minutes/hour x 24 hour/day)(4.8mA)]} x (24hour/day)

S(Rx w SS) equation in hours:

{(60x50mA-minutes)/[(60 minutes/hour x 24 hour/day)(sum of IC currents in mA)]} x (24hour/day)

(*) = Unable to locate datasheet for integrated chip (IC) referenced by Schotz

SONY EXHIBIT 1005 – 0672

NOTE : A=Altstatt S=Schotz DSSS=Direct Sequence Spread Spectrum w=with Tx=transmitter

System	Part	SupplyCurrent (in mA)	Size (in inches)	Playtime	Note
					Altstatt's Tx
A(Tx)	BA1404	3	18-pin 0.44 x 0.30		FM Stereo Transmitter
				16+ hours	Tx continuous operation time
S(Tx w SS)	DSP56002	90	144-pin 0.78 x 0.78		Schotz DSSS Tx
	>PLL	1	N/A		PLL located inside DSP56002
	>ckout	14	N/A		ckout located inside DSP56002
	PIC16C55	1.8	28-pin 1.5 x 0.50		Microprocessor
	SAA7360		44-pin 0.50 x 0.50		A/D converter
	>analog	43			function of the A/D converter
	>digital	50			function of the A/D converter
	RF2422	45	16-pin 0.39 x 0.24		Modulator
	MC12210	10.2	16-pin 0.39 x 0.24		PLL
	SMV2500	19	12-pin 0.28 x 0.28		VCO
	CYLINK SSTS	no data	no data		**DSSS Transmitter (*)**
	HK-3131-01	no data	no data		**Optical Digital Rcvr (*)**
	M2 D300	no data	no data		**VCO (*)**
				0.18 hours or 11 minutes	

A(Tx) equation in hours:

{(60x50mA-minutes)/[(60 minutes/hour x 24 hour/day)(3mA)]} x (24hour/day)

S(Tx w SS) equation in hours:

{(60x50mA-minutes)/[(60 minutes/hour x 24 hour/day)(sum of IC currents in mA)]} x (24hour/day)

(*) = Unable to locate datasheet for integrated chip (IC) referenced by Schotz

SONY EXHIBIT 1005 – 0673

NOTE : A=Altstatt S=Schotz DSSS=Direct Sequence Spread Spectrum w=with Rx=Receiver

System	Part	SupplyCurrent (in mA)	Size (in inches)	Playtime	Note
					Altstatt's Rx
A(Rx)	TA7792	4	16-pin 0.77 x 0.30		AM/FM Tuner System
	TA7766A	0.8	18-pin 0.44 x 0.30		FM PLL
				10+ hours	Rx continuous operation time
S(Rx w SS)	DSP56002	90	144-pin 0.78 x 0.78		Schotz DSSS Rx
	>PLL	1	N/A		PLL located inside DSP56002
	>ckout	14	N/A		ckout located inside DSP56002
	PIC16C55	1.8	28-pin 1.5 x 0.50		Microprocessor
	CYLINK	no data	no data		DSSS Receiver
	MGA86576	16	4-pin 0.20 x 0.07		LNA
	IAM81008	no data	no data		**Mixer (*)**
	CS8402	1.5	28-pin 1.20 x 0.20		Digital Interface Tx
	TDA1305T	42	28-pin 0.70 x 0.40		DAC
	MC12210	10.2	16-pin 0.39 x 0.24		PLL
	SMV2500	19	12-pin 0.28 x 0.28		VCO
	HK-3131-03	no data	no data		**Optical Digital Tx (*)**
				0.25 hours or 15 minutes	

A(Rx) equation in hours:

{(60x50mA-minutes)/[(60 minutes/hour x 24 hour/day)(4.8mA)]} x (24hour/day)

S(Rx w SS) equation in hours:

{(60x50mA-minutes)/[(60 minutes/hour x 24 hour/day)(sum of IC currents in mA)]} x (24hour/day)

(*) = Unable to locate datasheet for integrated chip (IC) referenced by Schotz

SONY EXHIBIT 1005 – 0674

EXHIBIT D

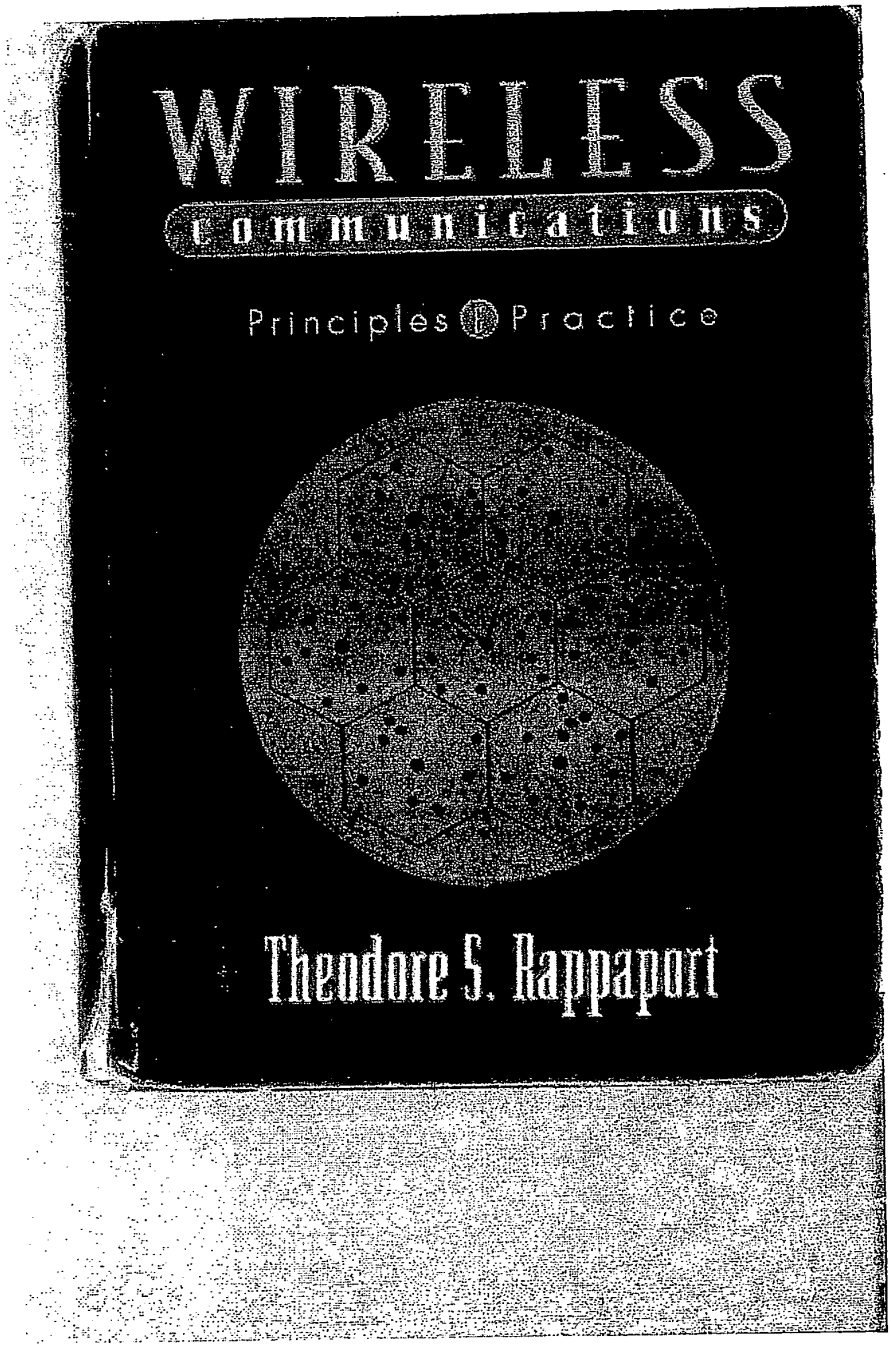
WIRELESS
communications
Principles & Practice
Theodore S. Rappaport

microcellular systems. However, satellite mobile systems offer tremendous promise for paging, data collection, and emergency communications, as well as for global roaming before IMT-2000 is deployed. In early 1990, the aerospace industry demonstrated the first successful launch of a small satellite on a rocket from a jet aircraft. This launch technique is more than an order of magnitude less expensive than conventional ground-based launches and can be deployed quickly, suggesting that a network of LEOs could be rapidly deployed for wireless communications around the globe. Already, several companies have proposed systems and service concepts for worldwide paging, cellular telephone, and emergency navigation and notification [IEE91].

In emerging nations, where existing telephone service is almost nonexistent, fixed cellular telephone systems are being installed at a rapid rate. This is due to the fact that developing nations are finding it is quicker and more affordable to install cellular telephone systems for fixed home use, rather than install wires in neighborhoods which have not yet received telephone connections to the PSTN.

The world is now in the early stages of a major telecommunications revolution that will provide ubiquitous communication access to citizens, wherever they are [Kuc91], [Goo91], [ITU94]. This new field requires engineers who can design and develop new wireless systems, make meaningful comparisons of competing systems, and understand the engineering trade-offs that must be made in any system. Such understanding can only be achieved by mastering the fundamental technical concepts of wireless personal communications. These concepts are the subject of the remaining chapters of this text.

1.6 Problems

1.1 Why do paging systems need to provide low data rates? How does a low data rate lead to better coverage?

1.2 Qualitatively describe how the power supply requirements differ between mobile and portable cellular phones, as well as the difference between pocket pagers and cordless phones. How does coverage range impact battery life in a mobile radio system?

1.3 In simulcasting paging systems, there usually is one dominant signal arriving at the paging receiver. In most, but not all cases, the dominant signal arrives from the transmitter closest to the paging receiver. Explain how the FM capture effect could help reception of the paging receiver. Could the FM capture effect help cellular radio systems? Explain how.

1.4 Where would walkie-talkies fit in Tables 1.5 and 1.6? Carefully describe the similarities and differences between walkie-talkies and cordless telephones. Why would consumers expect a much higher grade of service for a cordless telephone system?

1.5 Assume a 1 Amp-hour battery is used on a cellular telephone (often called a cellular subscriber unit). Also assume that the phone's radio receiver draws 35 mA on receive and 250 mA during a call. How long would the phone work (i.e. what is the battery life) if the user has one 3-minute call every day? every 6

SONY EXHIBIT 1005 – 0676

hours? every hour? What is the maximum talk time available on the cellular phone in this example?

1.6 Assume a CT2 subscriber unit has the same size battery as the phone in Problem 1.5, but the paging receiver draws 5 mA and the transmitter draws 80 mA during a call. Recompute the battery life for the cases in Problem 1.5. Recompute the maximum talk time for the CT2 handset.

1.7 Why would one expect the CT2 handset in Problem 1.6 to have a smaller battery drain during transmission than a cellular telephone?

1.8 Why is FM, rather than AM, used in most mobile radio systems today? List as many reasons as you can think of, and justify your responses. Consider issues such as fidelity, power consumption, and noise.

1.9 List the factors that led to the development of (a) the GSM system for Europe, and (b) the U.S. digital cellular system. How important was it for both efforts to (i) maintain compatibility with existing cellular phones? (ii) obtain spectral efficiency? (iii) obtain new radio spectrum?

1.10 Assume that a GSM, an IS-95, and a U.S. digital cellular base station transmit the same power over the same distance. Which system will provide the best SNR at a mobile receiver? How much is the improvement over the other two systems? Assume a perfect receiver with only thermal noise is used for each of the three systems.

1.11 Discuss the similarities and difference between a conventional cellular radio system and a space-based cellular radio system. What are the advantages and disadvantages of each system? Which system could support a larger number of users for a given frequency allocation? How would this impact the cost of service for each subscriber?

1.12 Assume that wireless communication services can be classified as belonging to one of the following four groups:

High power, wide area systems (cellular)
Low power, local area systems (cordless telephone and PCS)
Low speed, wide area systems (mobile data)
High speed, local area systems (wireless LANs)

Classify each of the wireless systems described in Chapter 1 using these four groups. Justify your answers. Note that some systems may fit into more than one group.

1.13 Discuss the importance of regional and international standards organizations such as ITU-R, ETSI, and WARC. What competitive advantages are there in using different wireless standards in different parts of the world? What disadvantages arise when different standards and different frequencies are used in different parts of the world?

1.14 Based on the proliferation of wireless standards throughout the world, discuss how likely it is for IMT-2000 to be adopted. Provide a detailed explanation, along with probable scenarios of services, spectrum allocations, and cost.

SONY EXHIBIT 1005 – 0677

Solutions Manual to Accompany

Wireless Communications
Principles and Practices

FIRST EDITION

Zhigang Rong

Theodore S. Rappaport

Prentice Hall PTR
Upper Saddle River, New Jersey 07458

SONY EXHIBIT 1005 – 0678

Cont'd

infrastructure, complexity, hardware cost are all low.

A cordless telephone, on the other hand, is a full duplex system. It allows simultaneous two-way communication. Transmission and reception is on two different channels (FDD) although new cordless system are using TDD. The coverage range, required infrastructure, hardware cost of a cordless phone system are low and the complexity is moderate. User expectations are greater for a cordless telephone.

1.5 If the user has one 3-minute call every day

the battery life $= \frac{60\times1000 \text{ (mA-minute)}}{(60\times24-3)\times35 + 3\times250 \text{ (mA-minute)}}$

$\doteq 1.175$ days $\doteq$ 28.2 hours

the user has one 3-minute call every 6 hours

the battery life $= \frac{60\times1000}{(60\times6-3)\times35 + 3\times250} \times 6 \doteq$ 27.18 hours

If the user has one 3-minute call every hour.

the battery life $= \frac{60\times1000}{(60-3)\times35 + 3\times250} \doteq$ 21.86 hours

the maximum talk time $= \frac{60\times1000}{250} = 240$ minutes $=$ 4 hours

1.6 For 3-minute call/day

battery life $= \frac{60\times1000 \text{ (mA-minute)}}{(60\times24-3)\times5 + 3\times80} \doteq 8.08$ days $=$ 193.94 hours

1.6 Cont'd

For 3 minute-call/6 hours,

battery life $= \frac{60\times1000}{(60\times6-3)\times5 + 3\times80} \times 6 \doteq$ 177.78 hours

For 3 minute-call/hour,

battery life $= \frac{60\times1000}{(60-3)\times5 + 3\times80} \doteq$ 114.29 hours

The maximum talk time $= \frac{60\times1000}{80} = 750$ minutes $=$ 12.5 hours

1.7 Since the coverage range of the CT-2 system is lower than that of the cellular radio system, to obtain the same signal-to-noise ratio in the coverage area, a CT-2 handset requires less transmitted power than a cellular telephone, and thus a smaller battery drain.

1.8 FM has several advantages over AM. The most important advantage is FM's superior noise suppression characteristics. With Conventional AM, the modulating signal is impressed onto the carrier in the form of amplitude variations. However, noise introduced into the system also produces changes in the amplitude of the envelope. Therefore, the noise cannot be removed from the composite waveform without also removing a portion of the information signal. With FM, the information is impressed onto the carrier in the form of frequency variations. Therefore, with FM receivers,

SONY EXHIBIT 1005 – 0679

SPREAD SPECTRUM SYSTEMS

WITH

COMMERCIAL APPLICATIONS

THIRD EDITION

ROBERT C. DIXON

SONY EXHIBIT 1005 – 0680

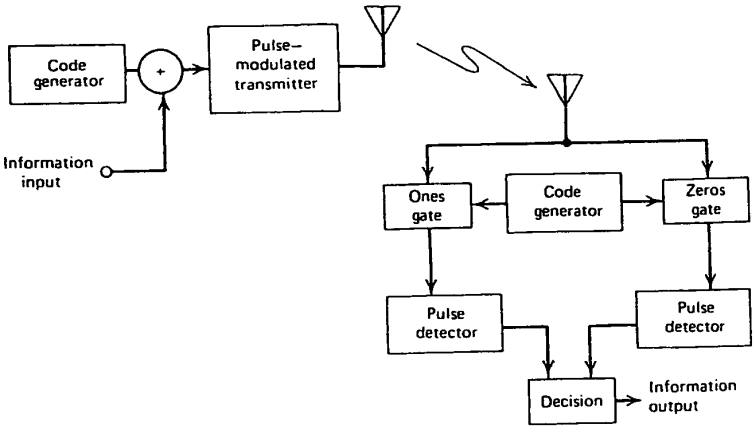

Figure 2.23 Simple time-hopping (pseudorandom pulse) system.

time-frequency hopping system might change frequency and/or amplitude only at one/zero transitions in the code sequence. Figure 2.23 shows a time-hopping system in block form. The simplicity of the modulator is obvious. Any pulse-modulatable signal source capable of following code waveforms is eligible as a time-hopping modulator.

Time hopping may be used to aid in reducing interference between systems in time-division multiplexing. However, stringent timing requirements must be placed on the overall system to ensure minimum overlap between transmitters. Also, as in any other coded communications system, the codes must be considered carefully from the standpoint of their cross-correlation properties.

Simple time-hopping modulation offers little in the way of interference rejection because a continuous carrier at the signal center frequency can block communications effectively. The primary advantage offered is in the reduced duty cycle; that is, to be really effective an interfering transmitter would be forced to transmit continuously (assuming the coding used by the time-hopper is unknown to the interferer). The power required of the reduced-duty-cycle time-hopper would be less than that of the interfering transmitter by a factor equal to the signal duty cycle.

Because of this relative vulnerability to interference, simple time-hopping transmissions should not be used for antijamming unless combined with frequency hopping to prevent single frequency interferers from causing significant losses. For ranging, multiple access, or other special uses time-hopping may be especially useful, if only because of the simplicity of generating the transmitted signal.

SONY EXHIBIT 1005 – 0681

This Page is Inserted by IFW Indexing and Scanning Operations and is not part of the Official Record

BEST AVAILABLE IMAGES

Defective images within this document are accurate representations of the original documents submitted by the applicant.

Defects in the images include but are not limited to the items checked:

- ☐ BLACK BORDERS
- ☐ IMAGE CUT OFF AT TOP, BOTTOM OR SIDES
- ☑ FADED TEXT OR DRAWING
- ☐ BLURRED OR ILLEGIBLE TEXT OR DRAWING
- ☐ SKEWED/SLANTED IMAGES
- ☑ COLOR OR BLACK AND WHITE PHOTOGRAPHS
- ☐ GRAY SCALE DOCUMENTS
- ☑ LINES OR MARKS ON ORIGINAL DOCUMENT
- ☐ REFERENCE(S) OR EXHIBIT(S) SUBMITTED ARE POOR QUALITY
- ☐ OTHER: _____

IMAGES ARE BEST AVAILABLE COPY.
As rescanning these documents will not correct the image problems checked, please do not report these problems to the IFW Image Problem Mailbox.

PTO/SB/06 (07-06)
Approved for use through 1/31/2007. OMB 0651-0032
U.S. Patent and Trademark Office; U.S. DEPARTMENT OF COMMERCE
Under the Paperwork Reduction Act of 1995, no persons are required to respond to a collection of information unless it displays a valid OMB control number.

PATENT APPLICATION FEE DETERMINATION RECORD

Substitute for Form PTO-875

Application or Docket Number	Filing Date	☐ To be Mailed
10/648,012	08/26/2003	

APPLICATION AS FILED – PART I

	(Column 1)	(Column 2)	SMALL ENTITY ☒		OR	OTHER THAN SMALL ENTITY	
FOR	NUMBER FILED	NUMBER EXTRA	RATE ($)	FEE ($)		RATE ($)	FEE ($)
☐ BASIC FEE (37 CFR 1.16(a), (b), or (c))	N/A	N/A	N/A			N/A	
☐ SEARCH FEE (37 CFR 1.16(k), (i), or (m))	N/A	N/A	N/A			N/A	
☐ EXAMINATION FEE (37 CFR 1.16(o), (p), or (q))	N/A	N/A	N/A			N/A	
TOTAL CLAIMS (37 CFR 1.16(i))	minus 20 =	*	X $ =		OR	X $ =	
INDEPENDENT CLAIMS (37 CFR 1.16(h))	minus 3 =	*	X $ =			X $ =	
☐ APPLICATION SIZE FEE (37 CFR 1.16(s))	If the specification and drawings exceed 100 sheets of paper, the application size fee due is $250 ($125 for small entity) for each additional 50 sheets or fraction thereof. See 35 U.S.C. 41(a)(1)(G) and 37 CFR 1.16(s).						
☐ MULTIPLE DEPENDENT CLAIM PRESENT (37 CFR 1.16(j))							
* If the difference in column 1 is less than zero, enter "0" in column 2.			TOTAL			TOTAL	

APPLICATION AS AMENDED – PART II

AMENDMENT 01/29/2007	(Column 1) CLAIMS REMAINING AFTER AMENDMENT		(Column 2) HIGHEST NUMBER PREVIOUSLY PAID FOR	(Column 3) PRESENT EXTRA	SMALL ENTITY RATE ($)	ADDITIONAL FEE ($)	OR	OTHER THAN SMALL ENTITY RATE ($)	ADDITIONAL FEE ($)
Total (37 CFR 1.16(i))	* 31	Minus	** 48	= 0	X $25 =	0	OR	X $ =	
Independent (37 CFR 1.16(h))	* 9	Minus	***19	= 0	X $100 =	0	OR	X $ =	
☐ Application Size Fee (37 CFR 1.16(s))									
☐ FIRST PRESENTATION OF MULTIPLE DEPENDENT CLAIM (37 CFR 1.16(j))							OR		
					TOTAL ADD'L FEE	0	OR	TOTAL ADD'L FEE	

AMENDMENT	(Column 1) CLAIMS REMAINING AFTER AMENDMENT		(Column 2) HIGHEST NUMBER PREVIOUSLY PAID FOR	(Column 3) PRESENT EXTRA	RATE ($)	ADDITIONAL FEE ($)		RATE ($)	ADDITIONAL FEE ($)
Total (37 CFR 1.16(i))	*	Minus	**	=	X $ =		OR	X $ =	
Independent (37 CFR 1.16(h))	*	Minus	***	=	X $ =		OR	X $ =	
☐ Application Size Fee (37 CFR 1.16(s))									
☐ FIRST PRESENTATION OF MULTIPLE DEPENDENT CLAIM (37 CFR 1.16(j))							OR		
					TOTAL ADD'L FEE		OR	TOTAL ADD'L FEE	

* If the entry in column 1 is less than the entry in column 2, write "0" in column 3.

** If the "Highest Number Previously Paid For" IN THIS SPACE is less than 20, enter "20".

*** If the "Highest Number Previously Paid For" IN THIS SPACE is less than 3, enter "3".

The "Highest Number Previously Paid For" (Total or Independent) is the highest number found in the appropriate box in column 1.

Legal Instrument Examiner:
Patsy Zimmerman

This collection of information is required by 37 CFR 1.16. The information is required to obtain or retain a benefit by the public which is to file (and by the USPTO to process) an application. Confidentiality is governed by 35 U.S.C. 122 and 37 CFR 1.14. This collection is estimated to take 12 minutes to complete, including gathering, preparing, and submitting the completed application form to the USPTO. Time will vary depending upon the individual case. Any comments on the amount of time you require to complete this form and/or suggestions for reducing this burden, should be sent to the Chief Information Officer, U.S. Patent and Trademark Office, U.S. Department of Commerce, P.O. Box 1450, Alexandria, VA 22313-1450. DO NOT SEND FEES OR COMPLETED FORMS TO THIS ADDRESS. **SEND TO: Commissioner for Patents, P.O. Box 1450, Alexandria, VA 22313-1450.**

If you need assistance in completing the form, call 1-800-PTO-9199 and select option 2.

OIPE
MAR 05 2007
PATENT & TRADEMARK OFFICE

03-06-07

IFW

PTO/SB/21 (07-06)
Approved for use through 09/30/2006. OMB 0651-0031
U.S. Patent and Trademark Office; U.S. DEPARTMENT OF COMMERCE
Under the Paperwork Reduction Act of 1995, no persons are required to respond to a collection of information unless it displays a valid OMB control number.

TRANSMITTAL FORM

(to be used for all correspondence after initial filing)

Total Number of Pages in This Submission

Application Number	10/648,012
Filing Date	08/26/2003
First Named Inventor	Woolfork, C. Earl
Art Unit	2615
Examiner Name	Flanders, Andrew C.
Attorney Docket Number	W003-4000

ENCLOSURES *(Check all that apply)*

- ☐ Fee Transmittal Form
  - ☐ Fee Attached
- ☐ Amendment/Reply
  - ☐ After Final
  - ☐ Affidavits/declaration(s)
- ☑ Extension of Time Request
- ☐ Express Abandonment Request
- ☐ Information Disclosure Statement
- ☐ Certified Copy of Priority Document(s)
- ☐ Reply to Missing Parts/ Incomplete Application
  - ☐ Reply to Missing Parts under 37 CFR 1.52 or 1.53
- ☐ Drawing(s)
- ☐ Licensing-related Papers
- ☐ Petition
- ☐ Petition to Convert to a Provisional Application
- ☐ Power of Attorney, Revocation Change of Correspondence Address
- ☐ Terminal Disclaimer
- ☐ Request for Refund
- ☐ CD, Number of CD(s) _____
  - ☐ Landscape Table on CD
- ☐ After Allowance Communication to TC
- ☐ Appeal Communication to Board of Appeals and Interferences
- ☐ Appeal Communication to TC **(Appeal Notice, Brief, Reply Brief)**
- ☐ Proprietary Information
- ☐ Status Letter
- ☑ Other Enclosure(s) (please Identify below):
  Credit Card Payment Form
  Request to Enter 01/29/07 Response

Remarks

EXPRESS MAIL LABEL NO.: EB 069229345 US

SIGNATURE OF APPLICANT, ATTORNEY, OR AGENT

Firm Name	The Patel Law Firm, P.C.		
Signature			
Printed name	Natu J. Patel		
Date	3/5/2007	Reg. No.	39,559

CERTIFICATE OF TRANSMISSION/MAILING

I hereby certify that this correspondence is being facsimile transmitted to the USPTO or deposited with the United States Postal Service with sufficient postage as first class mail in an envelope addressed to: Commissioner for Patents, P.O. Box 1450, Alexandria, VA 22313-1450 on the date shown below:

Signature			
Typed or printed name	Natu J. Patel	Date	3/5/2007

This collection of information is required by 37 CFR 1.5. The information is required to obtain or retain a benefit by the public which is to file (and by the USPTO to process) an application. Confidentiality is governed by 35 U.S.C. 122 and 37 CFR 1.11 and1.14. This collection is estimated to 2 hours to complete, including gathering, preparing, and submitting the completed application form to the USPTO. Time will vary depending upon the individual case. Any comments on the amount of time you require to complete this form and/or suggestions for reducing this burden, should be sent to the Chief Information Officer, U.S. Patent and Trademark Office, U.S. Department of Commerce, P.O. Box 1450, Alexandria, VA 22313-1450. DO NOT SEND FEES OR COMPLETED FORMS TO THIS ADDRESS. **SEND TO: Commissioner for Patents, P.O. Box 1450, Alexandria, VA 22313-1450.**

If you need assistance in completing the form, call 1-800-PTO-9199 and select option 2.

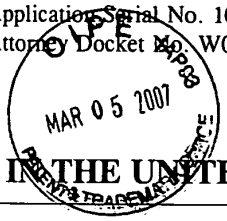

EXPRESS MAIL LABEL NO.: EB 069229345 US

IN THE UNITED STATES PATENT AND TRADEMARK OFFICE

Application No.:	10/648,012
Applicant:	WOOLFORK, C. Earl
Filing Date:	08/26/2003
Title:	WIRELESS DIGITAL AUDIO MUSIC SYSTEM
TC/A.U.:	2615
Confirmation No.	3337
Examiner:	FLANDERS, Andrew C.
Docket No.	W003-4000

Mail Stop AF
Commissioner for Patents
Post Office Box 1450
Alexandria, Virginia 22313-1450

REQUEST TO ENTER JANUARY 29, 2007 RESPONSE WITH THE PETITION FOR EXTENSION OF TIME

Dear Sir:

Applicant filed the response to the Final Office Action of October 2, 2006 and Advisory Action of December 27, 2006, with the United States Patent & Trademark Office on **January 29, 2007** ("Response"). Through an inadvertent error, the Applicant did not include the Petition for Extension of Time and pay the required fee with the Response. Applicant learnt about this error from Examiner Flanders on a morning of March 5, 2007. Applicant immediately prepared this Petition and hereby respectfully requests the Commissioner to accept this Petition with fees and enter the Response that was filed on or about January 29, 2007.

In the event that any additional fees are due, the Commissioner is hereby authorized to charge any fees, which may be required by or to give effect the to this paper to Deposit Account #50-4010. A duplicate copy of this authorization is enclosed herewith.

Respectfully submitted,
THE PATEL LAW FIRM, P.C.

Date: March 5th, 2007

Natu J. Patel
USPTO Reg. No. 39,559

NJP/lv/ec
Enclosure:

THE PATEL LAW FIRM, P.C.
2532 Dupont Drive
Irvine, California 92612-1524
Business: (949) 955-1077
Facsimile: (949) 955-1877
www.thepatellawfirm.com
NPatel@thePatelLawFirm.com

SONY EXHIBIT 1005 – 0686

Application Serial No. 10/648,012
Attorney Docket No. W003-4000

CERTIFICATE OF EXPRESS MAIL

I hereby certify that this paper (along with any paper referred to as being attached or enclosed) is being deposited with the United States Postal Service on the date shown below with sufficient postage via EXPRESS MAIL in an envelope addressed as follows (**EXPRESS MAIL LABEL NO.: EB 069229345 US**):

Mail Stop AF
Commissioner for Patents
Post Office Box 1450
Alexandria, Virginia 22313-1450

Natu J. Patel, USPTO Reg. No. 39,559 Date: March 5, 2007

OIPE
MAR 05 2007
IAP83
PATENT & TRADEMARK OFFICE

PTO/SB/22 (09-06)
Approved for use through 03/31/2007. OMB 0651-0031
U.S. Patent and Trademark Office; U.S. DEPARMENT OF COMMERCE
Under the paperwork Reduction Act of 1995, no persons are required to respond to a collection of information unless if displays a valid OMB control number.

PETITION FOR EXTENSION OF TIME UNDER 37 CFR 1.136(a) **FY 2006** *(Fees pursuant to the Consolidated Appropriations Act, 2005 (H.R. 4818).)*	Docket Number (Optional) W003-4000
Application Number 10/648,012	Filed 8/26/03
For C. Earl Woolfork	
Art Unit 2615	Examiner Andrew C. Flanders

This is a request under the provisions of 37 CFR 1.136(a) to extend the period for filing a reply in the above identified application.

The requested extension and fee are as follows (check time period desired and enter the appropriate fee below):

		Fee	Small Entity Fee	
☐	One month (37 CFR 1.17(a)(1))	$120	$60	$
☐	Two months (37 CFR 1.17(a)(2))	$450	$225	$
☒	Three months (37 CFR 1.17(a)(3))	$1020	$510	$ 510 —
☐	Four months (37 CFR 1.17(a)(4))	$1590	$795	$
☐	Five months (37 CFR 1.17(a)(5))	$2160	$1080	$

☒ Applicant claims small entity status. See 37 CFR 1.27.

☐ A check in the amount of the fee is enclosed.

☒ Payment by credit card. Form PTO-2038 is attached.

☐ The Director has already been authorized to charge fees in this application to a Deposit Account.

☒ The Director is hereby authorized to charge any fees which may be required, or credit any overpayment, to Deposit Account Number 50-4010. I have enclosed a duplicate copy of this sheet.

WARNING: Information on this form may become public. Credit card information should not be included on this form. Provide credit card information and authorization on PTO-2038.

I am the

☐ applicant/inventor.

☐ assignee of record of the entire interest. See 37 CFR 3.71. Statement under 37 CFR 3.73(b) is enclosed (Form PTO/SB/96).

☒ attorney or agent of record. Registration Number 39,559

☐ attorney or agent under 37 CFR 1.34. Registration number if acting under 37 CFR 1.34 _____

Signature — 3-5-2007 Date

Natu J. Patel — Typed or printed name

949-955-1077 — Telephone Number

NOTE: Signatures of all the inventors or assignees of record of the entire interest or their representative(s) are required. Submit multiple forms if more than one signature is required, see below.

☐ Total of _____ forms are submitted.

This collection of information is required by 37 CFR 1.136(a). The information is required to obtain or retain a benefit by the public which is to file (and by the USPTO to process) an application. Confidentiality is governed by 35 U.S.C. 122 and 37 CFR 1.11 and 1.14. This collection is estimated to take 6 minutes to complete, including gathering, preparing, and submitting the completed application form to the USPTO. Time will vary depending upon the individual case. Any comments on the amount of time you require to complete this form and/or suggestions for reducing this burden, should be sent to the Chief Information Officer, U.S. Patent and Trademark Office, U.S. Department of Commerce, P.O. Box 1450, Alexandria, VA 22313-1450. DO NOT SEND FEES OR COMPLETED FORMS TO THIS ADDRESS. **SEND TO: Commissioner for Patents, P.O. Box 1450, Alexandria, VA 22313-1450.**

If you need assistance in completing the form, call 1-800-PTO-9199 and select option 2.

03/07/2007 RMEBRAHT 00000019 10648012

01 FC:2253 510.00 OP

RECEIVED
CENTRAL FAX CENTER
MAR 07 2007

Application Serial No. 10/648,012
Attorney Docket No. W003-4000

EXPRESS MAIL LABEL NO.: EB 069229345 US

IN THE UNITED STATES PATENT AND TRADEMARK OFFICE

Application No.:	10/648,012
Applicant:	WOOLFORK, C. Earl
Filing Date:	08/26/2003
Title:	WIRELESS DIGITAL AUDIO MUSIC SYSTEM
TC/A.U.:	2615
Confirmation No.	3337
Examiner:	FLANDERS, Andrew C.
Docket No.	W003-4000

Mail Stop AF
Commissioner for Patents
Post Office Box 1450
Alexandria, Virginia 22313-1450

REQUEST TO ENTER JANUARY 29, 2007 RESPONSE WITH THE PETITION FOR EXTENSION OF TIME

Dear Sir:

Applicant filed the response to the Final Office Action of October 2, 2006 and Advisory Action of December 27, 2006, with the United States Patent & Trademark Office on January 29, 2007 ("Response"). Through an inadvertent error, the Applicant did not include the Petition for Extension of Time and pay the required fee with the Response. Applicant learnt about this error from Examiner Flanders on a morning of March 5, 2007. Applicant immediately prepared this Petition and hereby respectfully requests the Commissioner to accept this Petition with fees and enter the Response that was filed on or about January 29, 2007.

PAGE 6/8 * RCVD AT 3/7/2007 1:03:48 PM [Eastern Standard Time] * SVR:USPTO-EFXRF-2/19 * DNIS:2738300 * CSID:949 955 1877 * DURATION (mm-ss):03-58

Application Serial No. 10/648,012
Attorney Docket No. W003-4000

In the event that any additional fees are due, the Commissioner is hereby authorized to charge any fees, which may be required by or to give effect the to this paper to Deposit Account #50-4010. A duplicate copy of this authorization is enclosed herewith.

Respectfully submitted,
THE PATEL LAW FIRM, P.C.

Date: March 5th, 2007

Natu J. Patel
USPTO Reg. No. 39,559

NJP/lv/ec
Enclosure:

THE PATEL LAW FIRM, P.C.
2532 Dupont Drive
Irvine, California 92612-1524
Business: (949) 955-1077
Facsimile: (949) 955-1877
www.thepatellawfirm.com
NPatel@thePatelLawFirm.com

PAGE 7/8 * RCVD AT 3/7/2007 1:03:48 PM [Eastern Standard Time] * SVR:USPTO-EFXRF-2/19 * DNIS:2738300 * CSID:949 955 1877 * DURATION (mm-ss):03-58

Application Serial No. 10/648,012
Attorney Docket No. W003-4000

CERTIFICATE OF EXPRESS MAIL

I hereby certify that this paper (along with any paper referred to as being attached or enclosed) is being deposited with the United States Postal Service on the date shown below with sufficient postage via EXPRESS MAIL in an envelope addressed as follows (**EXPRESS MAIL LABEL NO.: EB 069229345 US**):

Mail Stop AF
Commissioner for Patents
Post Office Box 1450
Alexandria, Virginia 22313-1450

Natu J. Patel, USPTO Reg. No. 39,559 Date: March 5, 2007

RECEIVED
CENTRAL FAX CENTER
MAR 07 2007

The Patel Law Firm
A Professional Corporation

2532 Dupont Drive
Irvine, California 92612-1524
Tel: (949) 955-1077
Fax: (949) 955-1877

FACSIMILE COVER SHEET

To:	**Patent Central**	**From:**	**Natu J. Patel**
Fax:	571-273-8300	**Pages:**	8 (including Cover Page)
Phone:		**Date:**	March 7, 2007
Re:	*Application No. 10/648,012* *Attorney Docket No. W003-4000*	**CC:**	

☐ **Urgent** ☐ **For Review** ☐ **Please Comment** ☐ **Please Reply** ☐ **Please Recycle**

• **Comments:**

Dear Sir or Madam:

The enclosed documents were forwarded to **"Mail Stop AF"** via U.S. Express Mail on March 5, 2007. An additional copy is being faxed to the number above for expedited processing, based on my telephone conversation today with Ms. Jessie Childs.

Thank you for your professional courtesy. Should you have any questions, please feel free to contact me.

Very truly yours,

Natu J. Patel

The information contained in this facsimile message is information privileged by attorney-client and/or attorney work product privilege. It is intended only for the individual named above and the privileges are not waived by virtue of this having been sent by facsimile. If the person actually receiving this facsimile or any other reader of the facsimile is not the named recipient or the employee or agent responsible to deliver it to the named recipient, and use, dissemination, distribution, or copying of the communication is strictly prohibited. If you have received this communication in error, please immediately notify us by telephone and return the original message to us at the above address via U.S. Postal Service.

RECEIVED
CENTRAL FAX CENTER

MAR 07 2007

PTO/SB/21 (07-06)
Approved for use through 09/30/2006. OMB 0651-0031
U.S. Patent and Trademark Office; U.S. DEPARTMENT OF COMMERCE
Under the Paperwork Reduction Act of 1995, no persons are required to respond to a collection of information unless it displays a valid OMB control number.

TRANSMITTAL FORM

(to be used for all correspondence after initial filing)

Total Number of Pages in This Submission

Application Number	10/648,012
Filing Date	08/26/2003
First Named Inventor	Woolfork, C. Earl
Art Unit	2616
Examiner Name	Flanders, Andrew C.
Attorney Docket Number	W003-4000

ENCLOSURES *(Check all that apply)*

- ☐ Fee Transmittal Form
  - ☐ Fee Attached
- ☑ Amendment/Reply
  - ☑ After Final
  - ☐ Affidavits/declaration(s)
- ☑ Extension of Time Request
- ☐ Express Abandonment Request
- ☐ Information Disclosure Statement
- ☐ Certified Copy of Priority Document(s)
- ☐ Reply to Missing Parts/ Incomplete Application
  - ☐ Reply to Missing Parts under 37 CFR 1.52 or 1.53
- ☐ Drawing(s)
- ☐ Licensing-related Papers
- ☐ Petition
- ☐ Petition to Convert to a Provisional Application
- ☐ Power of Attorney, Revocation Change of Correspondence Address
- ☐ Terminal Disclaimer
- ☐ Request for Refund
- ☐ CD, Number of CD(s) _____
  - ☐ Landscape Table on CD
- ☐ After Allowance Communication to TC
- ☐ Appeal Communication to Board of Appeals and Interferences
- ☐ Appeal Communication to TC (Appeal Notice, Brief, Reply Brief)
- ☐ Proprietary Information
- ☐ Status Letter
- ☐ Other Enclosure(s) (please identify below):
  Credit Card Payment Form
  Request to Enter 01/29/07 Response

Remarks

EXPRESS MAIL LABEL NO.: EB 069229345 US

SIGNATURE OF APPLICANT, ATTORNEY, OR AGENT

Firm Name	The Patel Law Firm, P.C.		
Signature	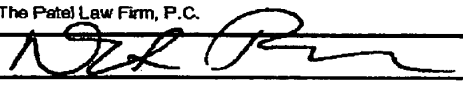		
Printed name	Natu J. Patel		
Date	3/5/2007	Reg. No.	39,559

CERTIFICATE OF TRANSMISSION/MAILING

I hereby certify that this correspondence is being facsimile transmitted to the USPTO or deposited with the United States Postal Service with sufficient postage as first class mail in an envelope addressed to: Commissioner for Patents, P.O. Box 1450, Alexandria, VA 22313-1450 on the date shown below:

Signature	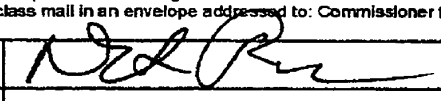		
Typed or printed name	Natu J. Patel	Date	3/5/2007

This collection of information is required by 37 CFR 1.5. The information is required to obtain or retain a benefit by the public which is to file (and by the USPTO to process) an application. Confidentiality is governed by 35 U.S.C. 122 and 37 CFR 1.11 and1.14. This collection is estimated to 2 hours to complete, including gathering, preparing, and submitting the completed application form to the USPTO. Time will vary depending upon the individual case. Any comments on the amount of time you require to complete this form and/or suggestions for reducing this burden, should be sent to the Chief Information Officer, U.S. Patent and Trademark Office, U.S. Department of Commerce, P.O. Box 1450, Alexandria, VA 22313-1450. DO NOT SEND FEES OR COMPLETED FORMS TO THIS ADDRESS. **SEND TO: Commissioner for Patents, P.O. Box 1450, Alexandria, VA 22313-1450.**

If you need assistance in completing the form, call 1-800-PTO-9199 and select option 2.

RECEIVED
CENTRAL FAX CENTER

MAR 07 2007

PTO/SB/22 (09-06)
Approved for use through 03/31/2007. OMB 0651-0031
U.S. Patent and Trademark Office; U.S. DEPARMENT OF COMMERCE
Under the paperwork Reduction Act of 1995, no persons are required to respond to a collection of information unless it displays a valid OMB control number.

PETITION FOR EXTENSION OF TIME UNDER 37 CFR 1.136(a) **FY 2006** *(Fees pursuant to the Consolidated Appropriations Act, 2006 (H.R. 4818).)*	Docket Number (Optional) W003-4000
Application Number 10/648,012	Filed 8/26/03
For C. Earl Woolfork	
Art Unit 2615	Examiner Andrew C. Flanders

This is a request under the provisions of 37 CFR 1.136(a) to extend the period for filing a reply in the above identified application.

The requested extension and fee are as follows (check time period desired and enter the appropriate fee below):

	Fee	Small Entity Fee	
☐ One month (37 CFR 1.17(a)(1))	$120	$60	$
☐ Two months (37 CFR 1.17(a)(2))	$450	$225	$
☒ Three months (37 CFR 1.17(a)(3))	$1020	$510	$ 510 —
☐ Four months (37 CFR 1.17(a)(4))	$1590	$795	$
☐ Five months (37 CFR 1.17(a)(5))	$2160	$1080	$

☒ Applicant claims small entity status. See 37 CFR 1.27.

☐ A check in the amount of the fee is enclosed.

☒ Payment by credit card. Form PTO-2038 is attached.

☐ The Director has already been authorized to charge fees in this application to a Deposit Account.

☒ The Director is hereby authorized to charge any fees which may be required, or credit any overpayment, to Deposit Account Number 50-4010. I have enclosed a duplicate copy of this sheet.

WARNING: Information on this form may become public. Credit card information should not be included on this form. Provide credit card information and authorization on PTO-2038.

I am the

☐ applicant/inventor.

☐ assignee of record of the entire interest. See 37 CFR 3.71. Statement under 37 CFR 3.73(b) is enclosed (Form PTO/SB/96).

☒ attorney or agent of record. Registration Number 39,559

☐ attorney or agent under 37 CFR 1.34. Registration number if acting under 37 CFR 1.34 _____

Signature — Date: 3-5-2007

Natu J. Patel — Typed or printed name

949-955-1077 — Telephone Number

NOTE: Signatures of all the inventors or assignees of record of the entire interest or their representative(s) are required. Submit multiple forms if more than one signature is required, see below.

☐ Total of _____ forms are submitted.

This collection of information is required by 37 CFR 1.136(a). The information is required to obtain or retain a benefit by the public which is to file (and by the USPTO to process) an application. Confidentiality is governed by 35 U.S.C. 122 and 37 CFR 1.11 and 1.14. This collection is estimated to take 6 minutes to complete, including gathering, preparing, and submitting the completed application form to the USPTO. Time will vary depending upon the individual case. Any comments on the amount of time you require to complete this form and/or suggestions for reducing this burden, should be sent to the Chief Information Officer, U.S. Patent and Trademark Office, U.S. Department of Commerce, P.O. Box 1450, Alexandria, VA 22313-1450. DO NOT SEND FEES OR COMPLETED FORMS TO THIS ADDRESS. **SEND TO: Commissioner for Patents, P.O. Box 1450, Alexandria, VA 22313-1450.**

If you need assistance in completing the form, call 1-800-PTO-9199 and select option 2.

RECEIVED
CENTRAL FAX CENTER

MAR 07 2007

PTO/SB/22 (09-06)
Approved for use through 03/31/2007. OMB 0651-0031
U.S. Patent and Trademark Office; U.S. DEPARMENT OF COMMERCE
Under the paperwork Reduction Act of 1995, no persons are required to respond to a collection of information unless it displays a valid OMB control number.

PETITION FOR EXTENSION OF TIME UNDER 37 CFR 1.136(a) FY 2006 *(Fees pursuant to the Consolidated Appropriations Act, 2005 (H.R. 4818).)*	Docket Number (Optional) W003-4000
Application Number 10/648,012	Filed 8/26/03
For C. Earl Woolfork	
Art Unit 2615	Examiner Andrew C. Flanders

This is a request under the provisions of 37 CFR 1.136(a) to extend the period for filing a reply in the above identified application.

The requested extension and fee are as follows (check time period desired and enter the appropriate fee below):

		Fee	Small Entity Fee	
☐	One month (37 CFR 1.17(a)(1))	$120	$60	$
☐	Two months (37 CFR 1.17(a)(2))	$450	$225	$
☒	Three months (37 CFR 1.17(a)(3))	$1020	$510	$ 510 —
☐	Four months (37 CFR 1.17(a)(4))	$1590	$795	$
☐	Five months (37 CFR 1.17(a)(5))	$2160	$1080	$

☒ Applicant claims small entity status. See 37 CFR 1.27.

☐ A check in the amount of the fee is enclosed.

☒ Payment by credit card. Form PTO-2038 is attached.

☐ The Director has already been authorized to charge fees in this application to a Deposit Account.

☒ The Director is hereby authorized to charge any fees which may be required, or credit any overpayment, to Deposit Account Number 50-4010. I have enclosed a duplicate copy of this sheet.

WARNING: Information on this form may become public. Credit card information should not be included on this form. Provide credit card information and authorization on PTO-2038.

I am the

☐ applicant/inventor.

☐ assignee of record of the entire interest. See 37 CFR 3.71. Statement under 37 CFR 3.73(b) is enclosed (Form PTO/SB/96).

☒ attorney or agent of record. Registration Number 39,559

☐ attorney or agent under 37 CFR 1.34. Registration number if acting under 37 CFR 1.34 _____

Signature — Date: 3-5-2007

Nath J. Patel — Typed or printed name

949-955-1077 — Telephone Number

NOTE: Signatures of all the inventors or assignees of record of the entire interest or their representative(s) are required. Submit multiple forms if more than one signature is required, see below.

☐ Total of _____ forms are submitted.

This collection of information is required by 37 CFR 1.136(a). The information is required to obtain or retain a benefit by the public which is to file (and by the USPTO to process) an application. Confidentiality is governed by 35 U.S.C. 122 and 37 CFR 1.11 and 1.14. This collection is estimated to take 6 minutes to complete, including gathering, preparing, and submitting the completed application form to the USPTO. Time will vary depending upon the individual case. Any comments on the amount of time you require to complete this form and/or suggestions for reducing this burden, should be sent to the Chief Information Officer, U.S. Patent and Trademark Office, U.S. Department of Commerce, P.O. Box 1450, Alexandria, VA 22313-1450. DO NOT SEND FEES OR COMPLETED FORMS TO THIS ADDRESS. **SEND TO: Commissioner for Patents, P.O. Box 1450, Alexandria, VA 22313-1450.**

If you need assistance in completing the form, call 1-800-PTO-9199 and select option 2.

EAST Search History

Ref #	Hits	Search Query	DBs	Default Operator	Plurals	Time Stamp
L1	34712	"band pass filter" bpf with "direct conversion receiver"	US-PGPUB; USPAT	OR	OFF	2007/03/28 15:33
L2	35	("band pass filter" bpf) with "direct conversion receiver"	US-PGPUB; USPAT	OR	OFF	2007/03/28 15:33
L3	8	l2 and @ad<"20011221"	US-PGPUB; USPAT	OR	OFF	2007/03/28 15:55
L4	1	("20030045235").PN.	US-PGPUB; USPAT	OR	OFF	2007/03/28 16:16
L5	1	("20040223622").PN.	US-PGPUB; USPAT	OR	OFF	2007/03/28 16:20
L6	1	("5946343").PN.	US-PGPUB; USPAT	OR	OFF	2007/03/28 16:27
L7	364	"64-ary"	US-PGPUB; USPAT	OR	OFF	2007/03/28 16:27
L8	74	"64-ary" near modulat$4	US-PGPUB; USPAT	OR	OFF	2007/03/28 16:27
L9	46	l8 and @ad<"20011120"	US-PGPUB; USPAT	OR	OFF	2007/03/28 16:27
S1	9	FHSS with unique with user	US-PGPUB; USPAT	OR	OFF	2007/03/20 09:30
S2	6	S1 and @ad<"20011221"	US-PGPUB; USPAT	OR	OFF	2006/05/02 17:45
S3	0	FHSS with unique adj hop	US-PGPUB; USPAT	OR	OFF	2006/05/02 17:46
S4	0	FHSS with each adj user	US-PGPUB; USPAT	OR	OFF	2006/05/02 17:46
S5	0	FHSS with individual adj user	US-PGPUB; USPAT	OR	OFF	2006/05/02 17:47
S6	0	(FHSS or "frequency hopping spread spectrum") with individual adj user	US-PGPUB; USPAT	OR	OFF	2006/05/02 17:47
S7	0	(FHSS or "frequency hopping spread spectrum") near user same unique	US-PGPUB; USPAT	OR	OFF	2006/05/02 17:47
S8	9	(FHSS or "frequency hopping spread spectrum") with user same unique	US-PGPUB; USPAT	OR	OFF	2006/05/02 17:48
S9	17	(FHSS or "frequency hopping spread spectrum") same unique same user	US-PGPUB; USPAT	OR	OFF	2006/05/02 17:48
S10	6	S9 and @ad<"20011221"	US-PGPUB; USPAT	OR	OFF	2006/05/02 17:48
S11	9	(FHSS or "frequency hopping spread spectrum") same multiple adj user!	US-PGPUB; USPAT	OR	OFF	2006/05/03 10:32

SONY EXHIBIT 1005 – 0696

EAST Search History

S12	91	(FHSS or "frequency hopping spread spectrum") same (pn or "hopping code")	US-PGPUB; USPAT	OR	OFF	2006/05/02 17:50
S13	13	(FHSS or "frequency hopping spread spectrum") with ("hopping code")	US-PGPUB; USPAT	OR	OFF	2006/05/02 17:50
S14	3	S13 and @ad<"20011221"	US-PGPUB; USPAT	OR	OFF	2006/05/02 17:51
S15	1	("5946343").PN.	US-PGPUB; USPAT	OR	OFF	2006/05/03 11:46
S16	1	("6342844").PN.	US-PGPUB; USPAT	OR	OFF	2006/05/03 11:46
S17	1	("5771441").PN.	US-PGPUB; USPAT	OR	OFF	2006/08/28 15:55
S18	10725	"rechargeable battery" and @ad<"20011220"	US-PGPUB; USPAT	OR	OFF	2006/08/28 15:55
S19	376	"rechargeable battery".ti. and @ad<"20011220"	US-PGPUB; USPAT	OR	OFF	2006/08/28 15:55
S20	17	("rechargeable battery" and portable).ti. and @ad<"20011220"	US-PGPUB; USPAT	OR	OFF	2006/08/28 15:57
S21	3623043	("rechargeable battery" and portable) with mah andd @ad<"20011220"	US-PGPUB; USPAT	OR	OFF	2006/08/28 15:57
S22	0	("rechargeable battery" and portable) with mah and @ad<"20011220"	US-PGPUB; USPAT	OR	OFF	2006/08/28 15:57
S23	3623041	("rechargeable battery" and portable) with ma-h andd @ad<"20011220"	US-PGPUB; USPAT	OR	OFF	2006/08/28 15:57
S24	3623041	("rechargeable battery" and portable) with "ma-h" andd @ad<"20011220"	US-PGPUB; USPAT	OR	OFF	2006/08/28 15:57
S25	0	("rechargeable battery" and portable) with "ma-h" and @ad<"20011220"	US-PGPUB; USPAT	OR	OFF	2006/08/28 15:57
S26	640693	("rechargeable battery" and portable) with milliamp hours and @ad<"20011220"	US-PGPUB; USPAT	OR	OFF	2006/08/28 15:57
S27	18	("rechargeable battery" and portable) and "milliamp hours" and @ad<"20011220"	US-PGPUB; USPAT	OR	OFF	2006/08/31 12:17
S28	29	"5491839"	US-PGPUB; USPAT	OR	OFF	2006/08/30 12:56
S29	1	("5491839").PN.	US-PGPUB; USPAT	OR	OFF	2006/08/30 12:56
S30	1	("5771441").PN.	US-PGPUB; USPAT	OR	OFF	2006/08/30 12:56

SONY EXHIBIT 1005 – 0697

EAST Search History

S31	1	("6,107,147").PN.	US-PGPUB; USPAT	OR	OFF	2006/08/31 12:17
S32	0	("10648012").PN.	US-PGPUB; USPAT	OR	OFF	2006/09/25 09:26
S33	1	("5946343").PN.	US-PGPUB; USPAT	OR	OFF	2006/09/25 09:50
S34	422	(455/564.1,412,413).CCLS.	US-PGPUB; USPAT	OR	OFF	2006/09/25 09:50
S35	5294	(375/219,295-297,346,348).CCLS.	US-PGPUB; USPAT	OR	OFF	2006/09/25 10:02
S36	1	("20040223622").PN.	US-PGPUB; USPAT	OR	OFF	2006/09/25 10:04
S37	1	("5946343").PN.	US-PGPUB; USPAT	OR	OFF	2006/09/25 10:05
S38	1	("7,050,419").PN.	US-PGPUB; USPAT	OR	OFF	2007/03/20 09:32
S39	1	("20010025358").PN.	US-PGPUB; USPAT	OR	OFF	2007/03/20 09:37
S40	2618	(375/341,140,147).CCLS.	US-PGPUB; USPAT	OR	OFF	2007/03/20 09:37
S41	1807	S40 and @ad<"20011220"	US-PGPUB; USPAT	OR	OFF	2007/03/20 09:38
S42	8	("2001/0025358").URPN.	USPAT	OR	OFF	2007/03/20 09:51
S43	0	("2002/0025009").URPN.	USPAT	OR	OFF	2007/03/20 09:59
S44	0	("2002/0025009").URPN.	USPAT	OR	OFF	2007/03/20 10:01
S45	12	("20020159543" | "5434623" | "5867532" | "5973642" | "6243423" | "6327314" | "6339612" | "6459728" | "6477210" | "6480554" | "6654429" | "6671338").PN. OR ("7099413").URPN.	US-PGPUB; USPAT; USOCR	OR	OFF	2007/03/20 10:08
S46	74	"band pass" and demodulator and interleaver and "viterbi decoder"	US-PGPUB; USPAT; USOCR	OR	OFF	2007/03/20 10:08
S47	59	S46 and @ad<"20011220"	US-PGPUB; USPAT; USOCR	OR	OFF	2007/03/20 10:08
S48	17	("4278978" | "4635063" | "5175558" | "5493307").PN. OR ("6130643"). URPN.	US-PGPUB; USPAT; USOCR	OR	OFF	2007/03/20 10:15
S49	1	("5175558").PN.	US-PGPUB; USPAT	OR	OFF	2007/03/20 10:16
S50	13	("4651155" | "4931977").PN. OR ("5175558").URPN.	US-PGPUB; USPAT; USOCR	OR	OFF	2007/03/20 10:34

SONY EXHIBIT 1005 – 0698

EAST Search History

S51	1	("5946343").PN.	US-PGPUB; USPAT	OR	OFF	2007/03/20 11:40
S52	7186	(375/295,146,130,340,316,148).CCLS.	US-PGPUB; USPAT	OR	OFF	2007/03/20 11:41
S53	4473	S52 and @ad<"20011220"	US-PGPUB; USPAT	OR	OFF	2007/03/20 11:41
S54	1	("20040223622").PN.	US-PGPUB; USPAT	OR	OFF	2007/03/21 12:11
S55	5	"reed solomon" with "intersymbol interference"	US-PGPUB; USPAT	OR	OFF	2007/03/21 12:13
S56	30	"reed solomon" same "intersymbol interference"	US-PGPUB; USPAT	OR	OFF	2007/03/21 12:13
S57	21	S56 and @ad<"20011220"	US-PGPUB; USPAT	OR	OFF	2007/03/21 12:27
S58	1	("20030045235").PN.	US-PGPUB; USPAT	OR	OFF	2007/03/21 12:37
S59	1	("5790595").PN.	US-PGPUB; USPAT	OR	OFF	2007/03/21 12:37
S60	2435	((375/262,265,341) or (714/794, 795)).CCLS.	US-PGPUB; USPAT	OR	OFF	2007/03/24 09:15
S62	56	"375".clas. and "fuzzy logic"	US-PGPUB; USPAT	OR	OFF	2007/03/26 11:04
S64	1	("4970637").PN.	US-PGPUB; USPAT	OR	OFF	2007/03/28 13:46
S65	755	(audio sound music voice) same (a/d "analog to digital") same (lpf "low pass")	US-PGPUB; USPAT	OR	OFF	2007/03/28 13:46
S66	282	(audio sound music voice) with (a/d "analog to digital") with ((lpf "low pass") and "digital")	US-PGPUB; USPAT	OR	OFF	2007/03/28 13:47
S67	227	(audio sound music voice) with (a/d "analog to digital") with ((lpf "low pass") and "digital") and @ad<"20011221"	US-PGPUB; USPAT	OR	OFF	2007/03/28 15:33

SONY EXHIBIT 1005 – 0699

UNITED STATES PATENT AND TRADEMARK OFFICE

UNITED STATES DEPARTMENT OF COMMERCE
United States Patent and Trademark Office
Address: COMMISSIONER FOR PATENTS
P.O. Box 1450
Alexandria, Virginia 22313-1450
www.uspto.gov

APPLICATION NO.	FILING DATE	FIRST NAMED INVENTOR	ATTORNEY DOCKET NO.	CONFIRMATION NO.
10/648,012	08/26/2003	C. Earl Woolfork	W003-4000	3337

48162 7590 03/30/2007

THE PATEL LAW FIRM, P.C.
2532 DUPONT DRIVE
IRVINE, CA 92612

EXAMINER	
FLANDERS, ANDREW C	
ART UNIT	PAPER NUMBER
2615	

SHORTENED STATUTORY PERIOD OF RESPONSE	MAIL DATE	DELIVERY MODE
3 MONTHS	03/30/2007	PAPER

Please find below and/or attached an Office communication concerning this application or proceeding.

If NO period for reply is specified above, the maximum statutory period will apply and will expire 6 MONTHS from the mailing date of this communication.

Office Action Summary	Application No.	Applicant(s)	
	10/648,012	WOOLFORK, C. EARL	
	Examiner	Art Unit	
	Andrew C. Flanders	2615	

-- The MAILING DATE of this communication appears on the cover sheet with the correspondence address --

Period for Reply

A SHORTENED STATUTORY PERIOD FOR REPLY IS SET TO EXPIRE 3 MONTH(S) OR THIRTY (30) DAYS, WHICHEVER IS LONGER, FROM THE MAILING DATE OF THIS COMMUNICATION.

- Extensions of time may be available under the provisions of 37 CFR 1.136(a). In no event, however, may a reply be timely filed after SIX (6) MONTHS from the mailing date of this communication.
- If NO period for reply is specified above, the maximum statutory period will apply and will expire SIX (6) MONTHS from the mailing date of this communication.
- Failure to reply within the set or extended period for reply will, by statute, cause the application to become ABANDONED (35 U.S.C. § 133). Any reply received by the Office later than three months after the mailing date of this communication, even if timely filed, may reduce any earned patent term adjustment. See 37 CFR 1.704(b).

Status

1)☒ Responsive to communication(s) filed on *07 March 2007*.

2a)☐ This action is **FINAL**. 2b)☒ This action is non-final.

3)☐ Since this application is in condition for allowance except for formal matters, prosecution as to the merits is closed in accordance with the practice under *Ex parte Quayle*, 1935 C.D. 11, 453 O.G. 213.

Disposition of Claims

4)☒ Claim(s) *19-34,37,38 and 41-53* is/are pending in the application.

4a) Of the above claim(s) _____ is/are withdrawn from consideration.

5)☐ Claim(s) _____ is/are allowed.

6)☒ Claim(s) *19-34,37,38 and 41-53* is/are rejected.

7)☐ Claim(s) _____ is/are objected to.

8)☐ Claim(s) _____ are subject to restriction and/or election requirement.

Application Papers

9)☐ The specification is objected to by the Examiner.

10)☐ The drawing(s) filed on _____ is/are: a)☐ accepted or b)☐ objected to by the Examiner.

Applicant may not request that any objection to the drawing(s) be held in abeyance. See 37 CFR 1.85(a).

Replacement drawing sheet(s) including the correction is required if the drawing(s) is objected to. See 37 CFR 1.121(d).

11)☐ The oath or declaration is objected to by the Examiner. Note the attached Office Action or form PTO-152.

Priority under 35 U.S.C. § 119

12)☐ Acknowledgment is made of a claim for foreign priority under 35 U.S.C. § 119(a)-(d) or (f).

a)☐ All b)☐ Some * c)☐ None of:

1.☐ Certified copies of the priority documents have been received.

2.☐ Certified copies of the priority documents have been received in Application No. _____.

3.☐ Copies of the certified copies of the priority documents have been received in this National Stage application from the International Bureau (PCT Rule 17.2(a)).

* See the attached detailed Office action for a list of the certified copies not received.

Attachment(s)

1) ☒ Notice of References Cited (PTO-892)
2) ☐ Notice of Draftsperson's Patent Drawing Review (PTO-948)
3) ☐ Information Disclosure Statement(s) (PTO/SB/08) Paper No(s)/Mail Date _____.
4) ☐ Interview Summary (PTO-413) Paper No(s)/Mail Date. _____.
5) ☐ Notice of Informal Patent Application
6) ☐ Other: _____.

DETAILED ACTION

Response to Arguments

Applicant's arguments, filed 07 March 2007, with respect to claims 19 – 32 and 43 - 53 have been fully considered and are persuasive. The previous rejection under 23 U.S.C. 112 has been withdrawn and prosecution is hereby reopened.

Claim Rejections - 35 USC § 112

The following is a quotation of the first paragraph of 35 U.S.C. 112:

> The specification shall contain a written description of the invention, and of the manner and process of making and using it, in such full, clear, concise, and exact terms as to enable any person skilled in the art to which it pertains, or with which it is most nearly connected, to make and use the same and shall set forth the best mode contemplated by the inventor of carrying out his invention.

The following is a quotation of the first paragraph of 35 U.S.C. 112:

> The specification shall contain a written description of the invention, and of the manner and process of making and using it, in such full, clear, concise, and exact terms as to enable any person skilled in the art to which it pertains, or with which it is most nearly connected, to make and use the same and shall set forth the best mode contemplated by the inventor of carrying out his invention.

Claims 19, 30 and 53 are rejected under 35 U.S.C. 112, first paragraph, as failing to comply with the enablement requirement. The claim(s) contains subject matter which was not described in the specification in such a way as to enable one skilled in the art to which it pertains, or with which it is most nearly connected, to make and/or use the invention. Claim 19 recites that the ~~reciver~~ receiver uses embedded fuzzy logic to optimize digital signal processing. However, Applicant's Fig. 1, shows a fuzzy logic detector (61) inside of the receiver unit (50). Receiver unit 50 is fully disclosed in Fig. 3, however, neither

the specification, nor the drawings provide detail as to how any fuzzy logic is used within the components of Fig. 3 to optimize digital signal processing.

Claims 20 – 29 and 31 – 32 are rejected as being dependent upon claims 19 and 30.

Claim Rejections - 35 USC § 102

The following is a quotation of the appropriate paragraphs of 35 U.S.C. 102 that form the basis for the rejections under this section made in this Office action:

> A person shall be entitled to a patent unless –
>
> (e) the invention was described in (1) an application for patent, published under section 122(b), by another filed in the United States before the invention by the applicant for patent or (2) a patent granted on an application for patent by another filed in the United States before the invention by the applicant for patent, except that an international application filed under the treaty defined in section 351(a) shall have the effects for purposes of this subsection of an application filed in the United States only if the international application designated the United States and was published under Article 21(2) of such treaty in the English language.

Claims 33 ~~and 34~~ and 37-38 are rejected under 35 U.S.C. 102(e) as being anticipated by Lindemann (U.S. Patent Application 2004/0223622).

Regarding **Claim 33**, Lindemann discloses:

A wireless digital audio system (Fig. 15B and Fig 17), comprising:

at least one audio source (Fig. 15B, 133, 134, 135);

at least one digital audio transmitter operatively coupled to said at least one audio source (Fig. 15B 131);

at least one audio receiver adapted for digital wireless communication with said at least one audio transmitter (Fig. 15B, 130 and Fig. 17 300)

each of said at least one digital audio transmitter and receiver being configured for code division multiple access (CDMA) communication (para 0075); and

at least one module adapted to audibly reproduce said processed CDMA signal, said CDMA communication configuration providing a user with independent audio reproduction free of interference from other users or wireless devices (Fig. 15A; the speakers reproduce, which receive the audio without interference from the other speakers).

Regarding **Claim 34**, in addition to the elements stated in the rejection of claim 33, Lindemann further discloses:

At least one module adapted to amplify said processed CDMA signals (Fig. 17 element 301).

Regarding **Claims 37 and 38**, ~~in addition to the elements stated above regarding claims 16 and 17,~~ Lindemann further discloses:

audio source provides analog output in the approximate range of 20 Hz to 20 kHz (i.e. audible range produced by the tweeters and woofers in Fig. 1; provided by the audio source input)

Claim Rejections - 35 USC § 103

The following is a quotation of 35 U.S.C. 103(a) which forms the basis for all obviousness rejections set forth in this Office action:

> (a) A patent may not be obtained though the invention is not identically disclosed or described as set forth in section 102 of this title, if the differences between the subject matter sought to be patented and the prior art are such that the subject matter as a whole would have been obvious at the time the invention was made to a person having ordinary skill in the art to which said subject matter pertains. Patentability shall not be negatived by the manner in which the invention was made.

Claims 19 – 32 and 43 – 53 are rejected under 35 U.S.C. 103(a) as being unpatentable over Lindemann (U.S. Patent Application 2004/0223622) in view of Sato (U.S. Patent 4,970,637) in further view of Benthin (U.S. Patent 5,790,595)

Regarding **Claim 19**, Lindemann discloses:

A wireless digital audio system (abstract) comprising:

at least one audio source (Fig. 5 digital audio sample data);

at least one digital audio transmitter operatively coupled to said at least one audio source (Figs. 4 and 5).11

Lindemann fails to explicitly disclose that the digital audio transmitter comprises:

a first analog low pass filter receiving audio input from said at least one audio source;

a digital low pass filter;

an analog-to-digital converter (ADC) operatively coupled between said first analog and digital low pass filters.

However, Lindemann does disclose inputting a digital audio signal. This signal must have been converted from the analog domain at some point in time. Further, Lindemann discloses a loudspeaker system for a stereo, stereo's are well known to include inputs such as microphones which input an analog audio signal. Filtering and converting from analog to digital and filtering again is notoriously well known in the art. For example, see Sato Fig.1.

Modifying Lindemann's transmitter to accept an analog input signal and convert it for transmission in the digital domain as taught by Sato discloses:

a first analog low pass filter receiving audio input from said at least one audio source (Sato Fig. 1which receives an analog input);

a digital low pass filter (Fig. 1 element 3; Max filter 3 operates on a digital signal and thus can be considered a 'digital low pass filter');

an analog-to-digital converter (ADC) operatively coupled between said first analog and digital low pass filters (Sato element 2).

It would have been obvious to one of ordinary skill in the art to modify Lindemann to accept an analog signal from a device such as a microphone and use a well known method such as the method taught by Sato. One would have been motivated to use the conversion technique to reduce noise and other errors.

a first encoder configured to reduce intersymbol interference (ISI) (Fig. 5 element 502 which is a Reed Solomon Encoder and Interleaver; it is known in the art to configure Reed Solomon encoding/interleaving to reduce ISI as is shown by Roberts 6,418,558. Reducing ISI is a desirable feature to any digital transmission);

a second channel encoder operatively coupled to said first encoder and adapted to reduce transmission errors(Fig. 5 element 500; para 35 which indicates 500 is used for error correction);

a digital modulator operatively coupled to said second channel encoder (Fig. 4 element 405 which includes a 'modulator' and 'DSSS spreader' which indicates these are two separate elements);

a phase shift key a module receiving output from said digital modulator and being configured for direct sequence spread spectrum (DSSS)communication, said PSK module transmitting a corresponding DSSS signal (Fig. 4 element 405, DSSS spreader using DQPSK orDBPSK).

Lindemann does not explicitly disclose DPSK as claimed, however, DPSK is a notoriously well known alternative for DQPSK. When desiging a transmitter, one must balance many various factors and depending on the characteristics desired (number of bits transferred, complexity and arrangement of the constellation), one may decide to implement a DPSK method in place of a DQPSK or DBPSK method.

The combination further discloses:

at least one audio receiver configured for digital wireless communication with said at least one audio transmitter (Fig. 3).

The combination does not explicitly disclose that the receiver utilizes embedded fuzzy logic to optimize digital signal processing. However, it is well known to use a fuzzy logic detection system in a receiver such as Lindemann's. Benthin disloses a receiver that determines soft data bits (Figure i, function of Figure 2) for additional

decoding performance in communication with the received, demodulated signal (output of II) from a spread spectrum demodulator (II) (col. 2, lines 6-31 col. 5, lines 10-25).

Applying this to the receiver of the combination meets the limitation of the receiver utilizing embedded fuzzy logic to optimize digital signal processing.

To one of ordinary skill in the art at the time the invention was made, it would have been obvious to implement the soft decision relevant components of Benethin as part of the encoding and signal reception parts of the system of the combination. The motivation behind such a modification would have been that the soft bit determining circuitry would have improved the reliability of the decision relating to the hard data bit equivalents of the received information, as is taught by Benthin.

The combination further discloses:

said at least one audio receiver comprising:

a band pass filter (BPF) configured to process said transmitted DSSS signal (BPF not shown in Fig. 3, para 57 of Lindemann);

a direct conversion module receiving output from said BPF and being configured to capture the correct bit sequence embedded in said processed DSSS signal (Fig. 3 301-304; directly converts the received signal to be ready for despreading);

a digital demodulator adapted to process output from said direct conversion module (Fig. 3 element 305);

a Viterbi decoder operatively coupled to said digital demodulator and generating a corresponding digital output (Fig. 8, 800);

a source decoder processing said digital output from said Viterbi decoder and being configured to decode the digital signal encoded by said first encoder (Fig. 8, 802).

The combination fails to explicitly disclose a second analog lowpass filter. However, it would have been obvious to provide an analog filter for the desired purpose of smoothing the analog output after a digital to analog conversion. Low pass filtering after a D/A is notoriously well known in the art, see Schotz 5,946,343 Fig. 7B element 218.

The combination further discloses:

a digital-to-analog converter (DAC) operatively coupled between said source decoder and said second analog low pass filter (Fig. 10 element 1005; the analog filter of Schotz being provided after the D/A); and

at least one module adapted to reproduce said generated audio output, said audio output having been wirelessly transmitted from said at least one audio source to a user without interference form other users or wireless devices (Fig. 1, the speakers, which receive the audio without interference from the other speakers).

Regarding **Claim 20**, in addition to the elements stated above regarding claim 19, the combination further discloses:

wherein said BPF is a wideband BPF (i.e. the band pass filter left out of Fig. 3; para 53; wideband being met by any band that could be considered 'wide'; i.e. a variety of well known configurations and choices available)

Regarding **Claim 21**, in addition to the elements stated above regarding claim 19, the combination further discloses:

wherein said modulator is a 64-Ary modulator (para 36, the modulator uses M-Ary, it is notoriously well known that M can be a variety of numbers depending on the transmission scheme, 64 being one possible obvious choice).

Regarding **Claim 22**, in addition to the elements stated above regarding claim 19, the combination further discloses:

wherein said modulator is a 64-Ary modulator (para 36, the modulator uses M-Ary, it is notoriously well known that M can be a variety of numbers depending on the transmission scheme, 64 being one possible obvious choice; thus the demodulator must operate accordingly)

Regarding **Claim 23**, in addition to the elements stated above regarding claim 19, the combination further discloses:

wherein said generated audio output is in the approximate range of 20Hz to 20kHz (i.e. audible range produced by the tweeters and woofers in Fig. 1).

Regarding **Claim 24**, in addition to the elements stated above regarding claim 19, the combination further discloses:

wherein said spread spectrum signal is transmitted at about 2.4GHz via an omni directional antennal (para 89; omni directional antenna being one of many well known and obvious choices for an annenta such as the one used by Fig. 1).

Regarding **Claim 25**, in addition to the elements stated above regarding claim 19, the combination fails to explicitly disclose the tramission power. However, it is notoriously well known to adjust the transmission power in order to achieve a desired transmission distance. It is well known and obvious that in some modifications/variations, a given distance for Lindmann may only require 100 milliwatts.

Regarding **Claim 26**, in addition to the elements stated above regarding claim 19, the combination further discloses:

Wherein said ADC is a 4-bit analog-to-digital converter (the number of bits in the Lidnemenn system is adjustable as is indicated by para 36-48; 4 being one possible obvious variation/modification).

Regarding **Claim 27**, in addition to the elements stated above regarding claim 19, the combination fails to explicitly disclose wherein said at least one audio source is a portable player. However, Examiner takes official notice that portable audio players, such as CD or MP3 players that produce an analog audio output are notoriously well known in the art. It would have been obvious to add one to the combination to be able

to play portable media on a home entertainment center such as the one in the combination.

Regarding **Claim 28**, in addition to the elements stated above regarding claim 19, the combination fails to explicitly disclose wherein said at least one audio reproducing module includes at least one headphone speaker. However, the device does include a transducer/speaker. It is notoriously well known in the art that it is obvious to substitute a headphone/earphone device in place of a speaker in the field of audio reproduction. This is typically done for a variety of reasons, including minimizing disturbance caused to others.

Regarding **Claim 29**, in addition to the elements stated above regarding claim 19, the combination further discloses:

wherein said BPF is operatively coupled to at least one antenna configured to receive said transmitted DSSS signal (BPF not shown in Fig. 3, para 57 of Lindemann).

Regarding **Claim 30**, in addition to the elements stated above regarding claim 19, the combination further discloses:

at least one module adapted to amplify said generated audio output (Fig. 10, 1007 and 1008).

Regarding **Claim 31**, in addition to the elements stated above regarding claim 30, the combination further discloses:

wherein said at least one audio amplifying module includes at least one power amplifier, said at least one power amplifier being configured to provide a low distortion audio signal output (Fig. 10, 1007 and 1008; para 73).

Regarding **Claim 32**, in addition to the elements stated above regarding claim 31, the combination further discloses:

wherein said at least one audio reproducing module includes at least one speaker, said at least one speaker receiving said low distortion audio signal output from said at least one power amplifier (Fig. 1, woofer and tweeter).

The combination fails to explicitly disclose that the speaker is a headphone speaker. However, it is notoriously well known in the art that it is obvious to substitute a headphone/earphone device in place of a speaker in the field of audio reproduction. This is typically done for a variety of reasons, including minimizing disturbance caused to others.

Regarding **Claims 43, 44 and 49 – 53**, claims 43, 44 and 49 - 53 are met by the rejections of claims 19, 27 and 30 as stated above.

Regarding **Claims 45 and 46**, in addition to the elements stated above regarding claims 43 and 44, Lindemann further discloses:

audio source provides analog output in the approximate range of 20 Hz to 20 kHz (i.e. audible range produced by the tweeters and woofers in Fig. 1; provided by the audio source input)

Regarding **Claims 47 and 48**, in addition to the elements stated above regarding claims 43 and 44, Lindemann does not disclose wherein at least one of said digital audio transmitter and receiver is battery powered. However, it would have been obvious to one of ordinary skill in the art at the time of the invention to make the speaker reception portion of Lindemann battery powered. One would have been motivated to do so to be able to place and use the speakers in an area where standard power supplies are unavailable (i.e. outdoors).

Claims 41 and 42 are rejected under 35 U.S.C. 103(a) as being unpatentable over Lindemann (U.S. Patent Application Publication 2004/0223622).

Regarding **Claims 41 and 42**, in addition to the elements stated above regarding claims 33 and 34, Lindemann does not disclose wherein at least one of said digital audio transmitter and receiver is battery powered. However, it would have been obvious to one of ordinary skill in the art at the time of the invention to make the speaker reception portion of Lindemann battery powered. One would have been motivated to do

so to be able to place and use the speakers in an area where standard power supplies are unavailable (i.e. outdoors).

Conclusion

Any inquiry concerning this communication or earlier communications from the examiner should be directed to Andrew C. Flanders whose telephone number is (571) 272-7516. The examiner can normally be reached on M-F 8:30 - 5:00.

If attempts to reach the examiner by telephone are unsuccessful, the examiner's supervisor, Sinh Tran can be reached on (571) 272-7546. The fax phone number for the organization where this application or proceeding is assigned is 571-273-8300.

Information regarding the status of an application may be obtained from the Patent Application Information Retrieval (PAIR) system. Status information for published applications may be obtained from either Private PAIR or Public PAIR. Status information for unpublished applications is available through Private PAIR only. For more information about the PAIR system, see http://pair-direct.uspto.gov. Should you have questions on access to the Private PAIR system, contact the Electronic Business Center (EBC) at 866-217-9197 (toll-free). If you would like assistance from a USPTO Customer Service Representative or access to the automated information system, call 800-786-9199 (IN USA OR CANADA) or 571-272-1000.

acf

SINH TRAN
SUPERVISORY PATENT EXAMINER

Notice of References Cited	Application/Control No. 10/648,012	Applicant(s)/Patent Under Reexamination WOOLFORK, C. EARL	
	Examiner Andrew C. Flanders	Art Unit 2615	Page 1 of 1

U.S. PATENT DOCUMENTS

*		Document Number Country Code-Number-Kind Code	Date MM-YYYY	Name	Classification
*	A	US-6,418,558	07-2002	Roberts et al.	725/129
	B	US-			
	C	US-			
	D	US-			
	E	US-			
	F	US-			
	G	US-			
	H	US-			
	I	US-			
	J	US-			
	K	US-			
	L	US-			
	M	US-			

FOREIGN PATENT DOCUMENTS

*		Document Number Country Code-Number-Kind Code	Date MM-YYYY	Country	Name	Classification
	N					
	O					
	P					
	Q					
	R					
	S					
	T					

NON-PATENT DOCUMENTS

*		Include as applicable: Author, Title Date, Publisher, Edition or Volume, Pertinent Pages)
	U	
	V	
	W	
	X	

*A copy of this reference is not being furnished with this Office action. (See MPEP § 707.05(a).)
Dates in MM-YYYY format are publication dates. Classifications may be US or foreign.

Index of Claims

Application/Control No.	Applicant(s)/Patent under Reexamination
10/648,012	WOOLFORK, C. EARL
Examiner Andrew Flanders	**Art Unit** 2644

√	Rejected	–	(Through numeral) Cancelled	N	Non-Elected	A	Appeal
=	Allowed	+	Restricted	I	Interference	O	Objected

Claim		Date									
Final	Original	5/10/05	12/22/05	5/18/06	9/12/06	12/27/06					
	1	√	√	√	√	√					
	2	√	√	√	√	√					
	3	√	√	√	√	√					
	4	√	√	√	√	√					
	5		√	√	√	√					
	6		√	√	√	√					
	7			√	√	√					
	8			√	√	√					
	9			√	√	√					
	10			√	√	√					
	11			√	√	√					
	12			√	√	√					
	13			√	√	√					
	14			√	√	√					
	15			√	√	√					
	16			√	√	√					
	17			√	√	√					
	18			√	√	√					
	19			√	√	√					
	20			√	√	√					
	21			√	√	√					
	22			√	√	√					
	23			√	√	√					
	24			√	√	√					
	25			√	√	√					
	26			√	√	√					
	27			√	√	√					
	28			√	√	√					
	29			√	√	√					
	30			√	√	√					
	31			√	√	√					
	32			√	√	√					
	33			√	√	√					
	34			√	√	√					
	35			√	√	√					
	36			√	√	√					
	37			√	√	√					
	38			√	√	√					
	39			√	√	√					
	40			√	√	√					
	41			√	√	√					
	42			√	√	√					
	43			√	√	√					
	44			√	√	√					
	45			√	√	√					
	46			√	√	√					
	47			√	√	√					
	48			√	√	√					
	49			√	√	√					
	50			√	√	√					

Claim		Date									
Final	Original				9/12/06	12/27/06					
	51				√	√					
	52				√	√					
	53				√	√					
	54				√	√					
	55										
	56										
	57										
	58										
	59										
	60										
	61										
	62										
	63										
	64										
	65										
	66										
	67										
	68										
	69										
	70										
	71										
	72										
	73										
	74										
	75										
	76										
	77										
	78										
	79										
	80										
	81										
	82										
	83										
	84										
	85										
	86										
	87										
	88										
	89										
	90										
	91										
	92										
	93										
	94										
	95										
	96										
	97										
	98										
	99										
	100										

Claim		Date									
Final	Original										
	101										
	102										
	103										
	104										
	105										
	106										
	107										
	108										
	109										
	110										
	111										
	112										
	113										
	114										
	115										
	116										
	117										
	118										
	119										
	120										
	121										
	122										
	123										
	124										
	125										
	126										
	127										
	128										
	129										
	130										
	131										
	132										
	133										
	134										
	135										
	136										
	137										
	138										
	139										
	140										
	141										
	142										
	143										
	144										
	145										
	146										
	147										
	148										
	149										
	150										

Search Notes

Application/Control No.	Applicant(s)/Patent under Reexamination
10/648,012	WOOLFORK, C. EARL
Examiner	**Art Unit**
Andrew ~~Cushin~~ Flanders	2644

SEARCHED

Class	Subclass	Date	Examiner
700	94	5/10/2005	~~AG~~ ACF
714	709,780	5/10/2005	~~AG~~
706	8,9	5/10/2005	~~AG~~
455	3.06,41	5/10/2005	~~AG~~
455	66.1	5/10/2005	~~AG~~
375	224	5/10/2005	~~AG~~
381	79	12/15/2005	~~AG~~
455	41.3	12/15/2005	~~AG~~
	updated	9/25/06	ACF
455	564.1,412	7/25/06	ACF
455	413	9/25/06	ACF
375	295-297	9/25/06	ACF
375	346,348	9/25/06	ACF
375	219	9/25/06	ACF

INTERFERENCE SEARCHED

Class	Subclass	Date	Examiner

SEARCH NOTES (INCLUDING SEARCH STRATEGY)

	DATE	EXMR
EAST search using USPAT PGPUB DERWENT EPO JPO USOCR dbs	5/10/2005	AG
cls/sbcls at left w/ keywords Bluetooth, fuzzy, soft decision, bit energy, probability, membership, and equivalents	5/10/2005	AG
Parent application, including applied references, considered	5/10/2005	AG
Inventor search, using EAST and Internet search engine	5/10/2005	AG
381/2,455/41.2,41.3(t.o.w/low pass) 381/270(t.o.w/ headphone) various text search - see search history printout	12/15/2005	dr
Received + updated Part of EAST list	5/12/06 9/25/06	ACF ACF
Tse Yeung Bill Trost Leave list	9/22/06 9/25/06	ACF ACF
Quochien Vuong	9/22/06	ACF

Search Notes	Application/Control No.	Applicant(s)/Patent under Reexamination	
	10/648,012	WOOLFORK, C. EARL	
	Examiner	Art Unit	
	Andrew C. Flanders	2615	

SEARCHED			
Class	Subclass	Date	Examiner
375	341, 140 147	3/20/07	ACF
375	295, 146	3/20/07	ACF
375	130, 340	3/20/07	ACF
375	316, 148	3/20/07	ACF
375	262, 295	3/24/07	ACF
375	341	3/24/07	ACF
714	794, 795	3/24	ACF

INTERFERENCE SEARCHED			
Class	Subclass	Date	Examiner

SEARCH NOTES (INCLUDING SEARCH STRATEGY)		
	DATE	EXMR
See History Attached		
Lexis West 375/140, 146, 147	3/20/07	ACF
Kevin Burd Class 375	3/21/07	ACF
Tsc Young 375/147, 262, 295 340, 341	3/27/07	ACF
714/794, 795		
375, class and "fuzzy logic"	3/20/07	ACF

Please Enter
3/29/07
ACF

RECEIVED
CENTRAL FAX CENTER
MAR 07 2007

Application Serial No. 10/648,012
Attorney Docket No. W003-4000

EXPRESS MAIL LABEL NO.: EB 069229345 US

IN THE UNITED STATES PATENT AND TRADEMARK OFFICE

Application No.:	10/648,012
Applicant:	WOOLFORK, C. Earl
Filing Date:	08/26/2003
Title:	WIRELESS DIGITAL AUDIO MUSIC SYSTEM
TC/A.U.:	2615
Confirmation No.	3337
Examiner:	FLANDERS, Andrew C.
Docket No.	W003-4000

Mail Stop AF
Commissioner for Patents
Post Office Box 1450
Alexandria, Virginia 22313-1450

REQUEST TO ENTER JANUARY 29, 2007 RESPONSE WITH THE PETITION FOR EXTENSION OF TIME

Dear Sir:

Applicant filed the response to the Final Office Action of October 2, 2006 and Advisory Action of December 27, 2006, with the United States Patent & Trademark Office on January 29, 2007 ("Response"). Through an inadvertent error, the Applicant did not include the Petition for Extension of Time and pay the required fee with the Response. Applicant learnt about this error from Examiner Flanders on a morning of March 5, 2007. Applicant immediately prepared this Petition and hereby respectfully requests the Commissioner to accept this Petition with fees and enter the Response that was filed on or about January 29, 2007.

PAGE 6/8 * RCVD AT 3/7/2007 1:03:48 PM [Eastern Standard Time] * SVR:USPTO-EFXRF-2/19 * DNIS:2738300 * CSID:949 955 1877 * DURATION (mm-ss):03-58

SONY EXHIBIT 1005 – 0721

RECEIVED
CENTRAL FAX CENTER

JUN 11 2007

PTO/SB/21 (04-07)
Approved for use through 09/30/2007. OMB 0651-0031
U.S. Patent and Trademark Office; U.S. DEPARTMENT OF COMMERCE
Under the Paperwork Reduction Act of 1995, no persons are required to respond to a collection of information unless it displays a valid OMB control number.

TRANSMITTAL FORM

(to be used for all correspondence after initial filing)

Total Number of Pages in This Submission

Application Number	10/648,012
Filing Date	08/26/2003
First Named Inventor	Woolfork, C. Earl
Art Unit	2815
Examiner Name	Flanders, Andrew C.
Attorney Docket Number	W003-4000

ENCLOSURES *(Check all that apply)*

- ☐ Fee Transmittal Form
  - ☐ Fee Attached
- ☑ Amendment/Reply
  - ☐ After Final
  - ☐ Affidavits/declaration(s)
- ☐ Extension of Time Request
- ☐ Express Abandonment Request
- ☐ Information Disclosure Statement
- ☐ Certified Copy of Priority Document(s)
- ☐ Reply to Missing Parts/ Incomplete Application
  - ☐ Reply to Missing Parts under 37 CFR 1.52 or 1.53
- ☐ Drawing(s)
- ☐ Licensing-related Papers
- ☐ Petition
- ☐ Petition to Convert to a Provisional Application
- ☐ Power of Attorney, Revocation Change of Correspondence Address
- ☐ Terminal Disclaimer
- ☐ Request for Refund
- ☐ CD, Number of CD(s) _____
  - ☐ Landscape Table on CD
- ☐ After Allowance Communication to TC
- ☐ Appeal Communication to Board of Appeals and Interferences
- ☐ Appeal Communication to TC (Appeal Notice, Brief, Reply Brief)
- ☐ Proprietary Information
- ☐ Status Letter
- ☐ Other Enclosure(s) (please identify below):

Remarks

This correspondence is being transmitted by Fax - (571) 273-8300

SIGNATURE OF APPLICANT, ATTORNEY, OR AGENT

Firm Name	The Patel Law Firm, P.C.		
Signature	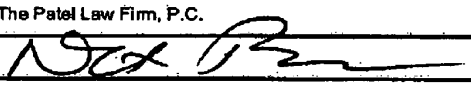		
Printed name	Natu J. Patel		
Date	June 10, 2007	Reg. No.	39,559

CERTIFICATE OF TRANSMISSION/MAILING

I hereby certify that this correspondence is being facsimile transmitted to the USPTO or deposited with the United States Postal Service with sufficient postage as first class mail in an envelope addressed to: Commissioner for Patents, P.O. Box 1450, Alexandria, VA 22313-1450 on the date shown below:

Signature	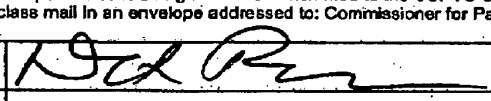		
Typed or printed name	Natu J. Patel	Date	June 10, 2007

This collection of information is required by 37 CFR 1.5. The information is required to obtain or retain a benefit by the public which is to file (and by the USPTO to process) an application. Confidentiality is governed by 35 U.S.C. 122 and 37 CFR 1.11 and1.14. This collection is estimated to 2 hours to complete, including gathering, preparing, and submitting the completed application form to the USPTO. Time will vary depending upon the individual case. Any comments on the amount of time you require to complete this form and/or suggestions for reducing this burden, should be sent to the Chief Information Officer, U.S. Patent and Trademark Office, U.S. Department of Commerce, P.O. Box 1450, Alexandria, VA 22313-1450. DO NOT SEND FEES OR COMPLETED FORMS TO THIS ADDRESS. **SEND TO: Commissioner for Patents, P.O. Box 1450, Alexandria, VA 22313-1450.**

If you need assistance in completing the form, call 1-800-PTO-9199 and select option 2.

Application Serial No. 10/648,012
Response to Office Action of March 30, 2007
Attorney Docket No. W003-4000

RECEIVED
CENTRAL FAX CENTER
JUN 11 2007

CERTIFICATE OF FACSIMILE TRANSMISSION

I hereby certify that this paper (along with any paper referred to as being attached or enclosed) is being facsimile transmitted to:

Mail Stop Amendment
Commissioner for Patents
Post Office Box 1450
Alexandria, Virginia 22313-1450

Natu J. Patel, USPTO Reg. No. 39,559 Date: June 10, 2007

PAGE 27/27 * RCVD AT 6/10/2007 3:06:20 PM [Eastern Daylight Time] * SVR:USPTO-EFXRF-1/21 * DNIS:2738300 * CSID:19499551877 * DURATION (mm-ss):10-22

RECEIVED
CENTRAL FAX CENTER
JUN 11 2007

IN THE UNITED STATES PATENT AND TRADEMARK OFFICE

Application No.:	10/648,012
Applicant:	WOOLFORK, C. Earl
Filing Date:	08/26/2003
Title:	WIRELESS DIGITAL AUDIO MUSIC SYSTEM
TC/A.U.:	2615
Confirmation No.	3337
Examiner:	FLANDERS, Andrew C.
Docket No.	W003-4000

Mail Stop Amendment
Commissioner for Patents
Post Office Box 1450
Alexandria, Virginia 22313-1450

RESPONSE TO OFFICE ACTION

Dear Sir:

In response to the Office Action (OA) of March 30, 2007, please amend without prejudice the above-identified patent application as follows:

Amendments to the Claims are reflected in the listing of claims, which begins on page 2 of this paper.

Remarks/Arguments begin on page 16 of this paper.

PAGE 2/27 * RCVD AT 6/10/2007 3:06:20 PM [Eastern Daylight Time] * SVR:USPTO-EFXRF-1/21 * DNIS:2738300 * CSID:19499551877 * DURATION (mm-ss):10-22

SONY EXHIBIT 1005 – 0724

AMENDMENT TO CLAIMS:

This listing of claims will replace all prior versions, and listings, of claims in the application. Six new claims, 54-59 have been added.

Listing of Claims:

Claims 1 - 18 (canceled).

19. (Currently Amended) A wireless digital audio system, comprising:

at least one audio source to produce an audio output representative of music;

at least one digital audio transmitter operatively coupled to said at least one audio source, said at least one audio transmitter comprising:

a first analog low pass filter receiving the audio output from said at least one audio source;

a digital low pass filter;

an analog-to-digital converter (ADC) operatively coupled between said first analog and digital low pass filters;

a first encoder receiving output from said digital low pass filter and being configured to reduce intersymbol interference (ISI);

a second channel encoder operatively coupled to said first encoder and adapted to reduce transmission errors;

a digital modulator operatively coupled to said second channel encoder; and

a differential phase shift key (DPSK) module receiving output from said digital modulator and a unique user code bit sequence and being configured for direct sequence spread spectrum (DSSS) communication, said DPSK module transmitting a corresponding DSSS signal having said audio output representative of the music and the unique user code bit sequence;

at least one audio receiver configured for digital wireless communication with said at least one audio transmitter ~~and utilizing embedded fuzzy logic to optimize digital signal processing~~, said at least one audio receiver comprising:

PAGE 3/27 * RCVD AT 6/10/2007 3:06:20 PM [Eastern Daylight Time] * SVR:USPTO-EFXRF-1/21 * DNIS:2738300 * CSID:19499551877 * DURATION (mm-ss):10-22

SONY EXHIBIT 1005 – 0725

a band pass filter (BPF) configured to process said transmitted DSSS signal;

a direct conversion module receiving output from said BPF and being configured to capture the ~~correct~~ unique user code bit sequence embedded in said processed DSSS signal;

a digital demodulator adapted to process an output from said direct conversion module;

a Viterbi decoder operatively coupled to said digital demodulator and generating a corresponding digital output;

a source decoder processing said digital output from said Viterbi decoder and being configured to decode the digital signal encoded by said first encoder;

a second analog low pass filter; and

a digital-to-analog converter (DAC) operatively coupled between said source decoder and said second analog low pass filter, said second analog low pass filter generating ~~an~~ the audio output representative of the music ~~corresponding to the decoded and converted digital signal~~; and

at least one module adapted to reproduce said ~~generated~~ audio output representative of said music, if the unique user code bit sequence is recognized, said audio output having been wirelessly transmitted from said at least one audio source to a user for private audio reproduction of said music without interference from other users or wireless devices.

20. (Previously Presented) The wireless digital audio system of Claim 19, wherein said BPF is a wideband BPF.

21. (Previously Presented) The wireless digital audio system of Claim 19, wherein said modulator is a 64-Ary modulator.

22. (Previously Presented) The wireless digital audio system of Claim 19,

PAGE 4/27 * RCVD AT 6/10/2007 3:06:20 PM [Eastern Daylight Time] * SVR:USPTO-EFXRF-1/21 * DNIS:2738300 * CSID:19499551877 * DURATION (mm-ss):10-22

SONY EXHIBIT 1005 – 0726

wherein said demodulator is a 64-Ary demodulator.

23. (Previously Presented) The wireless digital audio system of Claim 19, wherein said generated audio output is in the approximate range of 20 Hz to 20 kHz.

24. (Previously Presented) The wireless digital audio system of Claim 19, wherein said spread spectrum signal is transmitted at about 2.4 GHz via an omni-directional antenna.

25. (Previously Presented) The wireless digital audio system of Claim 24, wherein said spread spectrum signal is transmitted at a power of about 100 milliwatts or less.

26. (Previously Presented) The wireless digital audio system of Claim 19, wherein said ADC is a 4-bit analog-to-digital converter.

27. (Previously Presented) The wireless digital audio system of Claim 19, wherein said at least one audio source is a portable audio player.

28. (Previously Presented) The wireless digital audio system of Claim 19, wherein said at least one audio reproducing module includes at least one headphone speaker.

29. (Previously Presented)The wireless digital audio system of Claim 19, wherein said BPF is operatively coupled to at least one antenna configured to receive said transmitted DSSS signal.

30. (Currently Amended) A wireless digital audio system, comprising:

at least one audio source;

PAGE 5/27 * RCVD AT 6/10/2007 3:06:20 PM [Eastern Daylight Time] * SVR:USPTO-EFXRF-1/21 * DNIS:2738300 * CSID:19499551877 * DURATION (mm-ss):10-22

SONY EXHIBIT 1005 – 0727

at least one digital audio transmitter operatively coupled to said at least one audio source, said at least one audio transmitter comprising:

a first analog low pass filter receiving audio output from said at least one audio source;

a digital low pass filter;

an analog-to-digital converter (ADC) operatively coupled between said first analog and digital low pass filters;

a first encoder receiving output from said digital low pass filter and being configured to reduce intersymbol interference (ISI);

a second channel encoder operatively coupled to said first encoder and adapted to reduce transmission errors;

a digital modulator operatively coupled to said second channel encoder; and

a differential phase shift key (DPSK) module receiving output from said digital modulator and a unique user code and being configured for direct sequence spread spectrum (DSSS) communication, said DPSK module transmitting a corresponding DSSS signal;

at least one audio receiver configured for digital wireless communication with said at least one audio transmitter and utilizing embedded fuzzy logic ~~to optimize digital signal processing~~ to enhance detection of the unique user code in said transmitted DSSS signal, said at least one audio receiver comprising:

a band pass filter (BPF) configured to process said transmitted DSSS signal;

a direct conversion module receiving output from said BPF and being configured to capture the correct bit sequence embedded in said processed DSSS signal;

a digital demodulator adapted to process output from said direct conversion module;

a Viterbi decoder operatively coupled to said digital demodulator and generating a corresponding digital output;

PAGE 6/27 * RCVD AT 6/10/2007 3:06:20 PM [Eastern Daylight Time] * SVR:USPTO-EFXRF-1/21 * DNIS:2738300 * CSID:19499551877 * DURATION (mm-ss):10-22

SONY EXHIBIT 1005 – 0728

a source decoder processing said digital output from said Viterbi decoder and being configured to decode the digital signal encoded by said first encoder;

a second analog low pass filter; and

a digital-to-analog converter (DAC) operatively coupled between said source decoder and said second analog low pass filter, said second analog low pass filter generating ~~an~~ the audio output ~~corresponding to the decoded and converted digital signal~~;

at least one module adapted to amplify said generated audio output; and

at least one module adapted to reproduce said amplified audio output, if the unique user code is recognized, said audio output having been wirelessly transmitted from said at least one audio source to a user privately without interference from other users or wireless devices.

31. (Previously Presented) The wireless digital audio system of Claim 30, wherein said at least one audio amplifying module includes at least one power amplifier, said at least one power amplifier being configured to provide a low distortion audio signal output.

32. (Previously Presented) The wireless digital audio system of Claim 31, wherein said at least one audio reproducing module includes at least one headphone speaker, said at least one headphone speaker receiving said low distortion audio signal output from said at least one power amplifier.

33. (Previously Presented) A wireless digital audio system, comprising:

at least one audio source;

at least one digital audio transmitter operatively coupled to said at least one audio source;

at least one audio receiver adapted for digital wireless communication with said at least one audio transmitter, each of said at least one digital audio transmitter and

PAGE 7/27 * RCVD AT 6/10/2007 3:06:20 PM [Eastern Daylight Time] * SVR:USPTO-EFXRF-1/21 * DNIS:2738300 * CSID:19499551877 * DURATION (mm-ss):10-22

SONY EXHIBIT 1005 – 0729

receiver being configured for code division multiple access (CDMA) communication; and

at least one module adapted to audibly reproduce said processed CDMA signal, said CDMA communication configuration providing a user with independent audio reproduction free of interference from other users or wireless devices.

34. (Previously Presented) A wireless digital audio system, comprising:

at least one audio source;

at least one digital audio transmitter operatively coupled to said at least one audio source;

at least one audio receiver adapted for digital wireless communication with said at least one audio transmitter, each of said at least one digital audio transmitter and receiver being configured for code division multiple access (CDMA) communication;

at least one module adapted to amplify said processed CDMA signal; and

at least one module adapted to audibly reproduce said amplified signal, said CDMA communication configuration providing a user with independent audio reproduction free of interference from other users or wireless devices.

Claims 35 - 36 (canceled).

37. (Previously Presented) The wireless digital audio system of Claim 33, wherein said at least one audio source provides analog output in the approximate range of 20 Hz to 20 kHz.

38. (Previously Presented) The wireless digital audio system of Claim 34, wherein said at least one audio source provides analog output in the approximate range of 20 Hz to 20 kHz.

Claims 39 - 40 (canceled).

PAGE 8/27 * RCVD AT 6/10/2007 3:06:20 PM [Eastern Daylight Time] * SVR:USPTO-EFXRF-1/21 * DNIS:2738300 * CSID:19499551877 * DURATION (mm-ss):10-22

SONY EXHIBIT 1005 – 0730

41. (Previously Presented) The wireless digital audio system of Claim 33, wherein at least one of said digital audio transmitter and receiver is battery-powered.

42. (Previously Presented) The wireless digital audio system of Claim 34, wherein at least one of said digital audio transmitter and receiver is battery-powered.

43. (Currently Amended) A wireless digital audio system, comprising:

at least one audio source;

at least one digital audio transmitter operatively coupled to said at least one audio source, said at least one audio transmitter comprising:

a first analog low pass filter receiving audio output representative of music from said at least one audio source;

a digital low pass filter;

an analog-to-digital converter (ADC) operatively coupled between said first analog and digital low pass filters;

a first encoder receiving output from said digital low pass filter and being configured to reduce intersymbol interference (ISI);

a second channel encoder operatively coupled to said first encoder and adapted to reduce transmission errors;

a digital modulator operatively coupled to said second channel encoder; and

a differential phase shift key (DPSK) module receiving output from said digital modulator and a unique user code bit sequence and being configured for direct sequence spread spectrum (DSSS) communication, said DPSK module transmitting a corresponding DSSS signal;

at least one audio receiver configured for digital wireless communication with said at least one audio transmitter, said at least one audio receiver comprising:

a band pass filter (BPF) configured to process said transmitted DSSS signal;

PAGE 9/27 * RCVD AT 6/10/2007 3:06:20 PM [Eastern Daylight Time] * SVR:USPTO-EFXRF-1/21 * DNIS:2738300 * CSID:19499551877 * DURATION (mm-ss):10-22

SONY EXHIBIT 1005 – 0731

a direct conversion module receiving output from said BPF and being configured to capture the ~~correct~~ the unique user code bit sequence embedded in said processed DSSS signal;

a digital demodulator adapted to process output from said direct conversion module;

a Viterbi decoder operatively coupled to said digital demodulator and generating a corresponding digital output;

a source decoder processing said digital output from said Viterbi decoder and being configured to decode the digital signal encoded by said first encoder;

a second analog low pass filter; and

a digital-to-analog converter (DAC) operatively coupled between said source decoder and said second analog low pass filter, said second analog low pass filter generating ~~an~~ the audio output representative of said music ~~corresponding to the decoded and converted digital signal~~; and

at least one module adapted to reproduce said ~~generated~~ audio output, if the unique user code bit sequence is recognized, said audio output representative of said music having been wirelessly transmitted from said at least one audio source to a user privately without interference from other users or wireless devices.

44. (Currently Amended) A wireless digital audio system, comprising:

at least one audio source;

at least one digital audio transmitter operatively coupled to said at least one audio source, said at least one audio transmitter comprising:

a first analog low pass filter receiving audio output representative of music from said at least one audio source;

a digital low pass filter;

an analog-to-digital converter (ADC) operatively coupled between said first analog and digital low pass filters;

PAGE 10/27 * RCVD AT 6/10/2007 3:06:20 PM [Eastern Daylight Time] * SVR:USPTO-EFXRF-1/21 * DNIS:2738300 * CSID:19499551877 * DURATION (mm-ss):10-22

SONY EXHIBIT 1005 – 0732

a first encoder receiving output from said digital low pass filter and being configured to reduce intersymbol interference (ISI);

a second channel encoder operatively coupled to said first encoder and adapted to reduce transmission errors;

a digital modulator operatively coupled to said second channel encoder; and

a differential phase shift key (DPSK) module receiving output from said digital modulator and a unique user code and being configured for direct sequence spread spectrum (DSSS) communication, said DPSK module transmitting a corresponding DSSS signal;

at least one audio receiver configured for digital wireless communication with said at least one audio transmitter, said at least one audio receiver comprising:

a band pass filter (BPF) configured to process said transmitted DSSS signal;

a direct conversion module receiving output from said BPF and being configured to capture the ~~correct bit sequence~~ unique user code embedded in said processed DSSS signal;

a digital demodulator adapted to process output from said direct conversion module;

a Viterbi decoder operatively coupled to said digital demodulator and generating a corresponding digital output;

a source decoder processing said digital output from said Viterbi decoder and being configured to decode the digital signal encoded by said first encoder;

a second analog low pass filter; and

a digital-to-analog converter (DAC) operatively coupled between said source decoder and said second analog low pass filter, said second analog low pass filter generating ~~an~~ the audio output representative of the music ~~corresponding to the decoded and converted digital signal~~;

at least one module adapted to amplify said generated audio output; and

PAGE 11/27 * RCVD AT 6/10/2007 3:06:20 PM [Eastern Daylight Time] * SVR:USPTO-EFXRF-1/21 * DNIS:2738300 * CSID:19499551877 * DURATION (mm-ss):10-22

SONY EXHIBIT 1005 – 0733

at least one module adapted to reproduce said amplified audio output, if the unique user code is recognized, said audio output having been wirelessly transmitted from said at least one audio source to a user privately ~~without interference from other users or wireless devices~~.

45. (Previously Presented) The wireless digital audio system of Claim 43, wherein said at least one audio source provides analog output in the approximate range of 20 Hz to 20 kHz.

46. (Previously Presented) The wireless digital audio system of Claim 44, wherein said at least one audio source provides analog output in the approximate range of 20 Hz to 20 kHz.

47. (Previously Presented) The wireless digital audio system of Claim 43, wherein at least one of said digital audio transmitter and receiver is battery-powered.

48. (Previously Presented) The wireless digital audio system of Claim 44, wherein at least one of said digital audio transmitter and receiver is battery-powered.

49. (Previously Presented) The wireless digital audio system of Claim 43, wherein said at least one audio source is a portable music player.

50. (Previously Presented) The wireless digital audio system of Claim 44, wherein said at least one audio source is a portable music player.

51. (Currently Amended) A wireless digital audio transmitter, comprising:

a first analog low pass filter receiving audio output representative of music from at least one audio source;

a digital low pass filter;

PAGE 12/27 * RCVD AT 6/10/2007 3:06:20 PM [Eastern Daylight Time] * SVR:USPTO-EFXRF-1/21 * DNIS:2738300 * CSID:19499551877 * DURATION (mm-ss):10-22

SONY EXHIBIT 1005 – 0734

an analog-to-digital converter (ADC) operatively coupled between said first analog and digital low pass filters;

a first encoder receiving output from said digital low pass filter and being configured to reduce intersymbol interference (ISI);

a second channel encoder operatively coupled to said first encoder and adapted to reduce transmission errors;

a digital modulator operatively coupled to said second channel encoder;

a code generator to add a unique user code to a modulator output, the modulator output including the audio output representative of said music; and

a differential phase shift key (DPSK) module receiving the modulator output from said digital modulator and the unique user code and being configured for direct sequence spread spectrum (DSSS) communication, said DPSK module transmitting a corresponding DSSS signal.

52. (Currently Amended) A wireless digital audio receiver, comprising:

a band pass filter (BPF) configured to process a transmitted DSSS signal;

a direct conversion module receiving output from said BPF and being configured to capture ~~the correct~~ a unique user code bit sequence embedded in said processed DSSS signal;

a digital demodulator adapted to process output from said direct conversion module;

a Viterbi decoder operatively coupled to said digital demodulator and generating a corresponding digital output;

a source decoder receiving said digital output from said Viterbi decoder and being configured to decode the digital signal encoded therein;

a second analog low pass filter; and

a digital-to-analog converter (DAC) operatively coupled between said source decoder and said second analog low pass filter, said second analog low pass filter generating an audio output representative of music, if the unique user code bit

PAGE 13/27 * RCVD AT 6/10/2007 3:06:20 PM [Eastern Daylight Time] * SVR:USPTO-EFXRF-1/21 * DNIS:2738300 * CSID:19499551877 * DURATION (mm-ss):10-22

SONY EXHIBIT 1005 – 0735

sequence is recognized, corresponding to the decoded and converted digital signal, said audio output having been wirelessly transmitted to a user for private listening of high fidelity audio music without interference from other users or wireless devices.

53. (Currently Amended) A wireless digital audio receiver ~~utilizing embedded fuzzy logic to optimize digital signal processing~~, comprising:

a band pass filter (BPF) configured to process a transmitted DSSS signal;

a direct conversion module receiving output from said BPF and being configured to capture ~~the correct~~ a unique user code bit sequence embedded in said processed DSSS signal;

a fuzzy logic detector to enhance detection of the unique user code bit sequence;

a digital demodulator adapted to process output from said direct conversion module;

a Viterbi decoder operatively coupled to said digital demodulator and generating a corresponding digital output;

a source decoder receiving said digital output from said Viterbi decoder and being configured to decode the digital signal encoded therein;

a second analog low pass filter; and

a digital-to-analog converter (DAC) operatively coupled between said source decoder and said second analog low pass filter, said second analog low pass filter generating an audio output, if the unique user code bit sequence is recognized, corresponding to the decoded and converted digital signal, said audio output having been wirelessly transmitted to a user privately without interference from other users or wireless devices.

54. (New) A wireless digital audio system, comprising:

an audio source to provide an audio signal representative of music having an existing analog headphone plug;

PAGE 14/27 * RCVD AT 6/10/2007 3:06:20 PM [Eastern Daylight Time] * SVR:USPTO-EFXRF-1/21 * DNIS:2738300 * CSID:19499551877 * DURATION (mm-ss):10-22

SONY EXHIBIT 1005 – 0736

a battery-powered transmitter coupled to said at least one audio source via said analog headphone plug and operative to transmit a code division multiple access (CDMA) communication signal having said audio signal representative of said music and an added unique user code;

a battery-powered audio receiver headphone set operative to receive the CDMA communication signal and audibly reproduce said audio signal representative of said music, if the unique user code is recognized, to provide a particular user with private audio reproduction free of interference from other users of other wireless digital audio music systems in a shared space.

55. (New) A wireless digital audio system, comprising:

an audio source to provide an audio signal representative of music having an existing analog headphone plug;

a battery-powered transmitter coupled to said at least one audio source via said analog headphone plug and operative to transmit a code division multiple access (CDMA) communication signal having a differential phase shift keying (DPSK) modulated signal of said audio signal representative of said music and an added unique user code;

an audio receiver headphone set operative to receive the CDMA communication signal and audibly reproduce said audio signal, if the unique user code is recognized, to provide a user with private audio reproduction of said music free of interference from other users of other wireless digital audio music systems in a shared space.

56.(New) The system of claim 55, said audio receiver headphone further comprising a fuzzy logic detector to enhance detection of the unique user code.

57. (New) A wireless digital audio headset receiver, comprising:

a direct conversion module configured to receive a wirelessly transmitted code division multiple access (CDMA) signal having an audio signal representative of audio

PAGE 15/27 * RCVD AT 6/10/2007 3:06:20 PM [Eastern Daylight Time] * SVR:USPTO-EFXRF-1/21 * DNIS:2738300 * CSID:19499551877 * DURATION (mm-ss):10-22

SONY EXHIBIT 1005 – 0737

music and a unique user code; and

headset speakers for privately reproducing said audio music to a user, if the unique user code is recognized, and free of interference from other users of other wireless digital audio music systems in a shared space.

58.(New) The receiver of claim 57, further comprising a fuzzy logic detector to enhance detection of the unique user code.

59. (New) A code division multiple access (CDMA) battery-powered transmitter comprising:

a jack to connect to an existing analog headphone plug of an audio source;

means for receiving an audio output representative of music from the audio music source;

means for generating a unique user code; and

means for wirelessly transmitting a CDMA communication signal having said audio output representative of said music and said unique user code to a wireless headphone receiver.

PAGE 16/27 * RCVD AT 6/10/2007 3:06:20 PM [Eastern Daylight Time] * SVR:USPTO-EFXRF-1/21 * DNIS:2738300 * CSID:19499551877 * DURATION (mm-ss):10-22

REMARKS/ARGUMENTS

Applicant has reviewed the Office Action (OA) of March 30, 2007 and made amendments to the claims, as indicated hereinabove, to overcome the Examiner's rejections and place the application in condition for allowance. No new matter has been added.

Status of Claims

Claims 19-34, 37, 38, 41-53 and 54-59 are pending in this application.

Claims 19, 30, 43, 44, 51, 52, and 53 have been amended.

Claims 54-59 have been added.

Claim Rejections Under 35 U.S.C. §112

The rejection of Claims 19, 30, and 53 under 35 U.S.C. §112, first paragraph, as failing to comply with the enablement requirement, is respectfully traversed.

In the interest of moving forward with the prosecution, Applicant has omitted "to optimize digital signal processing" from the claims, such as Claim 19. In some instance, the omitted language has been changed to "to enhance detection of a unique user code...," as in Claim 30. The applicant has also deleted "utilizing embedded fuzzy logic to optimize digital signal processing" language from the preamble of Claim 53. In Claim 53, a "fuzzy logic detector to enhance detection..." has been added to the claim. Support for the amendments can be found in paragraph para. [0005] of the Response dated August 15, 2006.

Based on the above, Applicant respectfully requests that the rejection under 35 U.S.C. §112, first paragraph of Claims 19, 30 and 53 be withdrawn.

The rejection of Claims 19-32 and 53 under 35 U.S.C. §112, first paragraph, as failing to comply with the written description requirement, is respectfully traversed.

PAGE 17/27 * RCVD AT 6/10/2007 3:06:20 PM [Eastern Daylight Time] * SVR:USPTO-EFXRF-1/21 * DNIS:2738300 * CSID:19499551877 * DURATION (mm-ss):10-22

SONY EXHIBIT 1005 – 0739

Claim Rejections Under 35 U.S.C. §102

The rejection of Claims 33, 34 and 37-38 under 35 U.S.C. §102(e) as being anticipated by Lindemann (U.S. Patent Application 2004/0223622) is respectfully traversed.

Claim 33 recites

> *...at least one module adapted to audibly reproduce said processed CDMA signal, said CDMA communication configuration providing a user with independent audio reproduction free of interference from other users or wireless devices.* (Emphasis added)

The above emphasized claim language is not taught or suggested by Lindemann. Lindemann does not address reproduction that is interference free. Furthermore, Applicant observes that Lindemann does not mention interference or address the problem identified by Applicant and thus Applicant's solution to provide *a user with independent audio reproduction free of interference from other users or wireless devices*. Instead, Lindemann is directed to digital wireless loudspeaker system and the delivery of signals to the speakers. Thus, Lindemann is not directed to a system capable of (1) providing a user with *independent audio reproduction;* and (2) *reproduction free of interference from other users or wireless devices*. By contrast, Lindemann simply provides a "loudspeaker system" where anyone can listen.

The rejection relies on FIG. 15A for a teaching that the "speakers reproduce, which receive the audio without interference from the other speakers." (See page 4 of the OA.) A quick search of the patent application publication reveals that there is no mention of the term "interference" in Lindemann. It is well known by those skilled in the art that radio frequency (RF) interference originates from a source (i.e., transmitter) external to a RF signal path and produces undesired artifacts in the RF signal. Lindemann does not address speaker receiver interference due to many same transmitters sharing the same space [Lindemann 20040223622 paragraph 0011 "...signal generated by the single RF transmitter in the audio transmission device;" and

PAGE 18/27 * RCVD AT 6/10/2007 3:06:20 PM [Eastern Daylight Time] * SVR:USPTO-EFXRF-1/21 * DNIS:2738300 * CSID:19499551877 * DURATION (mm-ss):10-22

SONY EXHIBIT 1005 – 0740

paragraph 0058 "...Signal generated by the single RF Transmitter."]. Based on the foregoing, Applicant respectfully requests that FIG. 15A does not provide any evidence that the speakers "receive the audio without interference."

Claim 34 contains similar language. Thus, the remarks set forth above in relation to Claim 33 equally apply to Claim 34.

Accordingly, Lindemann cannot anticipate Applicant's Claims 33 and 34. For at least this reason, Applicant respectfully requests withdrawal of the rejection of Claims 33 and 34 by Lindemann under 35 U.S.C. §102(e).

Dependent Claims 37 and 41 depend directly or indirectly from independent Claim 33. Furthermore, dependent Claims 38 and 42 depend from independent Claim 34. These dependent claims contain all of the limitations of independent Claims 33 or 34, thus, any rejections under 35 U.S.C. §§102 or 103 should be withdrawn by virtue of their dependency from independent Claims 33 or 34.

Applicant believes that the dependent claims 37, 38, 41 and 42 recite other features that are clearly lacking from the applied reference(s), and do not acquiesce to any of the rejections.

Claim Rejections Under 35 U.S.C. §103

The rejection of claims 19-32 and 43-53 under 35 U.S.C. §103(a) as being unpatentable by Lindemann et al. (U.S. Patent Application 2004/0223622) in view of Sato (U.S. Patent 4,970,637) in further view of Benthin (U.S. Patent 5,790,595) is respectfully traversed. Claims 19, 30, 43, 44, 52 and 53 have been amended to better clarify applicant's invention.

Applicant would like to mention that in addition to Lindemann, Sato and Benthin, the rejection of Claim 19 also relies upon Roberts, et al. (U.S. Patent 6,415,558), and Schotz (U.S. Patent 5,946,343). Furthermore, the rejection of Claim 19 relies on numerous statements that various claimed elements in Claim 19 are notorious.

PAGE 19/27 * RCVD AT 6/10/2007 3:06:20 PM [Eastern Daylight Time] * SVR:USPTO-EFXRF-1/21 * DNIS:2738300 * CSID:19499551877 * DURATION (mm-ss):10-22

SONY EXHIBIT 1005 – 0741

In regards to amended Claim 19, in addition to the remarks set forth above in relation to claims 33 and 34, neither Lindemann, Sato nor Benthin teach *"for private audio reproduction of said music"* or *"reproduce said audio output representative of said music, if the unique user code bit sequence is recognized."* Hence any combination of Lindemann, Sato and Benthin would not produce applicant's invention. There is nothing in Lindemann, the primary reference, to provide a user with private audio reproduction, such as via headphones, and without interference from other users. By contrast, Lindemann simply provides a "loudspeaker system" where anyone can listen; Lindemann does not address interference anywhere. The word "private" does not appear anywhere in Lindemann, Sato or Benthin. Furthermore, "private" does not appear in Schotz '343 or Roberts '558.

In Lindemann, the system does not transmit "music" with a "unique user code bit sequence." At best, Lindemann sends different signals to different speakers and does not require "a unique user code bit sequence."

Furthermore, the wireless digital audio music system of the Applicant utilizes Code Division Multiple Access (CDMA) to allow multiple wireless digital audio music system users to simultaneously share a finite amount of radio frequency spectrum. Lindemann utilizes CDMA to multiplex the audio spectrum [Lindemann 20040223622 paragraph 0075 "This corresponds to a Code Division Multiple Access (CDMA) method of multiplexing the multiple audio channels."]. Moreover, Schotz does not mention CDMA anywhere. Therefore, any combination of Lindemann, Sato, Benthin, Schotz or Roberts would not produce the applicant's invention.

In view of the foregoing amendments and remarks, the rejection of Claim 19 under 35 U.S.C. §103(a) as being unpatentable by Lindemann in view of Sato in further view of Benthin, Schotz and/or Roberts, as well as, the numerous assertions by the Examiner that claimed elements are notorious, is respectfully traversed. Thus, the rejection of Claim 19 under 35 U.S.C. §103(a) should be withdrawn.

Dependent Claims 20-29 depend directly or indirectly from independent Claim 19. These dependent claims contain all of the limitations of independent Claim 19,

PAGE 20/27 * RCVD AT 6/10/2007 3:06:20 PM [Eastern Daylight Time] * SVR:USPTO-EFXRF-1/21 * DNIS:2738300 * CSID:19499551877 * DURATION (mm-ss):10-22

SONY EXHIBIT 1005 – 0742

Amended Claims 43 and 44 contain similar language as Claim 19. Thus, the remarks set forth above in relation to Claim 19 equally apply.

In view of the foregoing amendments and remarks, the rejection of Claims 43 and 44 under 35 U.S.C. §103(a) as being unpatentable by Lindemann in view of Sato in further view of Benthin, Schotz and/or Roberts, as well as, the numerous assertions by the Examiner that claimed elements are notorious, is respectfully traversed. Thus, the rejection of Claims 43 and 44 under 35 U.S.C. §103(a) should be withdrawn.

Dependent Claims 45, 47, and 49 depend directly or indirectly from independent Claim 43. Dependent Claims 46, 48, and 50 depend directly or indirectly from independent Claim 44. These dependent claims contain all of the limitations of their corresponding independent Claim 43 or 44, thus, any rejections under 35 U.S.C. §103 should be withdrawn by virtue of their dependency therefrom.

Applicant believes that many of the dependent Claims 45-50 recite other features that are clearly lacking from the applied references, and do not acquiesce to any of the rejections.

Claim 51 has been amended to positively recite "*a code generator to add a unique user code to a modulator output, the modulator output including the audio output representative of said music,*" in combination with the other claimed elements. As remarked previously, Lindemann, the primary reference, does not require a "*unique user code*" or adds "*the unique user code to a modulator output ... including the audio output representative of said music.*"

Neither Lindemann, Sato, Benthin, Schotz nor Roberts, adds "*the unique user code to a modulator output ... including the audio output representative of said music.*" Hence any combination of these references still would not produce applicant's claimed invention.

In view of the foregoing amendments and remarks, the rejection of Claim 51 under 35 U.S.C. §103(a) as being unpatentable by Lindemann in view of Sato in further view of Benthin, Schotz and/or Roberts, as well as, the numerous assertions by

PAGE 22/27 * RCVD AT 6/10/2007 3:06:20 PM [Eastern Daylight Time] * SVR:USPTO-EFXRF-1/21 * DNIS:2738300 * CSID:19499551877 * DURATION (mm-ss):10-22

SONY EXHIBIT 1005 – 0743

Best Available Copy

thus, any rejections under 35 U.S.C. §103 should be withdrawn by virtue of their dependency from independent Claim 19.

Applicant believes that many of the dependent claims 20-29 recite other features that are clearly lacking from the applied references, and do not acquiesce to any of the rejections.

As to amended Claim 30, Claim 30 includes similar amendments described above in relation to Claim 19. Thus, the remarks above equally apply to Claim 30. Claim 30 also includes "*fuzzy logic to enhance detection of the unique user code.*" Since Lindemann does not require a "*unique user code*," there is no need or motivation to place "*fuzzy logic to enhance detection of the unique user code*," in the receiver of Lindemann.

Applicant observes that Benthin is relied upon for soft decisions in a receiver or during demodulation of a signal. (See page 7 of the OA.) However, Benthin does not teach "*fuzzy logic to enhance detection of the unique user code*," in the receiver. Thus, any combination of Lindemann in view of Sato and Benthin still would not produce applicant's claimed invention.

In view of the foregoing amendments and remarks, the rejection of Claim 30 under 35 U.S.C. §103(a) as being unpatentable by Lindemann in view of Sato in further view of Benthin, Schotz and/or Roberts, as well as, the numerous assertions by the Examiner that claimed elements are notorious, is respectfully traversed. Thus, the rejection of Claim 30 under 35 U.S.C. §103(a) should be withdrawn.

Dependent Claims 31 and 32 depend directly or indirectly from independent Claim 30. These dependent claims contain all of the limitations of independent Claim 30, thus, any rejections under 35 U.S.C. §103 should be withdrawn by virtue of their dependency from independent Claim 30.

Applicant believes that many of the dependent Claims 31-32 recite other features that are clearly lacking from the applied references, and do not acquiesce to any of the rejections.

PAGE 21/27 * RCVD AT 6/10/2007 3:06:20 PM [Eastern Daylight Time] * SVR:USPTO-EFXRF-1/21 * DNIS:2738300 * CSID:19499551877 * DURATION (mm-ss):10-22

SONY EXHIBIT 1005 – 0744

the Examiner that claimed elements are notorious, is respectfully traversed. Thus, the rejection of Claim 51 under 35 U.S.C. §103(a) should be withdrawn.

Amended Claim 52 includes a positive recitation of a "*unique user code bit sequence*" and "*for private listening of high fidelity audio music.*" The remarks set forth above in relation to Claim 19 equally apply to claim 52.

In view of the foregoing amendments and remarks, the rejection of Claim 52 under 35 U.S.C. §103(a) as being unpatentable by Lindemann in view of Sato in further view of Benthin, Schotz and/or Roberts, as well as, the numerous assertions by the Examiner that claimed elements are notorious, is respectfully traversed. Thus, the rejection of Claim 52 under 35 U.S.C. §103(a) should be withdrawn.

Amended Claim 53 includes a positive recitation of a "*unique user code bit sequence*" and "*a fuzzy logic detector to enhance detection of the unique user code bit sequence.*" The remarks set forth above in relation to Claim 30 equally apply to Claim 53.

In view of the foregoing amendments and remarks, the rejection of Claim 53 under 35 U.S.C. §103(a) as being unpatentable by Lindemann in view of Sato in further view of Benthin, Schotz and/or Roberts, as well as, the numerous assertions by the Examiner that claimed elements are notorious, is respectfully traversed. Thus, the rejection of Claim 53 under 35 U.S.C. §103(a) should be withdrawn.

The rejection of Claims 41 and 42 under 35 U.S.C. §103(a) as being unpatentable by Lindemann (U.S. Patent Application 2004/0223622) is respectfully traversed.

Lindemann as modified by the Examiner does not teach the deficiencies described in relation to independent Claims 33 and 34. Hence, Lindemann as modified does not teach the claimed invention since Lindemann as modified does not teach all the limitation of the base Claims (33 and 34) from which Claims 41 and 42 depend.

In view of the above remarks, the rejection of Claims 41 and 42 under 35 U.S.C. §103(a) as being unpatentable by Lindemann should be withdrawn.

New Claims 54 and 55 are directed to a wireless digital audio system which

PAGE 23/27 * RCVD AT 6/10/2007 3:06:20 PM [Eastern Daylight Time] * SVR:USPTO-EFXRF-1/21 * DNIS:2738300 * CSID:19499551877 * DURATION (mm-ss):10-22

SONY EXHIBIT 1005 – 0745

includes among other things "*an added unique user code*," "*private audio reproduction*" at "*an audio receiver headphone set*" none of which is taught by the prior art references of record. New Claim 56, by virtue of its dependency, contains all of the limitations of Independent Claim 55, and therefore allowable. Additionally, it recites features that are clearly lacking from the prior art references of record.

New Claim 57 is directed to a wireless headset receiver receiving a wirelessly transmitted CDMA signal with an audio signal and a unique user code. The receiver also has "*headset speakers for privately reproducing said audio music to a user, if the unique user code is recognized*" which is not taught by the prior art references of record. New Claim 58, by virtue of its dependency, contains all of the limitations of Independent Claim 57, and therefore allowable. Additionally, it recites features that are clearly lacking from the prior art references of record.

New Claim 59 is directed to a CDMA transmitter that connects to an existing analog headphone plug to receive an audio output and adds a "*unique user code.*" The prior art references of record do not teach or suggest a CDMA transmitter that sends both an audio output and a unique user code to a wireless headphone receiver.

Conclusion

No amendment made was related to the statutory requirements of patentability unless expressly stated herein. Six (6) new claims have been added. Applicant believes that the application, as presently amended, is in condition for allowance. If for any reason the Examiner finds the application other than in condition for allowance, **Applicant respectfully requests** the Examiner to call the undersigned attorney at the telephone number listed herein below to discuss any steps necessary for placing the application in condition for allowance.

///

///

PAGE 24/27 * RCVD AT 6/10/2007 3:06:20 PM [Eastern Daylight Time] * SVR:USPTO-EFXRF-1/21 * DNIS:2738300 * CSID:19499551877 * DURATION (mm-ss):10-22

SONY EXHIBIT 1005 – 0746

RECEIVED
CENTRAL FAX CENTER
JUN 11 2007

In the event that any additional fees are due, the Commissioner is hereby authorized to charge any fees, which may be required by or to give effect the to this paper to **Deposit Account #50-4010**. A duplicate copy of this authorization is enclosed herewith.

Respectfully submitted,
THE PATEL LAW FIRM, P.C.

Date: June 10th, 2007

Natu J. Patel
USPTO Reg. No. 39,559

NJP/lv/ec
Enclosure:

THE PATEL LAW FIRM, P.C.
2532 Dupont Drive
Irvine, California 92612-1524
Business: (949) 955-1077
Facsimile: (949) 955-1877
www.thepatellawfirm.com
NPatel@thePatelLawFirm.com

PAGE 25/27 * RCVD AT 6/10/2007 3:08:20 PM [Eastern Daylight Time] * SVR:USPTO-EFXRF-1/21 * DNIS:2738300 * CSID:19499551877 * DURATION (mm-ss):10-22

SONY EXHIBIT 1005 – 0747

RECEIVED
CENTRAL FAX CENTER
JUN 11 2007

In the event that any additional fees are due, the Commissioner is hereby authorized to charge any fees, which may be required by or to give effect the to this paper to **Deposit Account #50-4010**. A duplicate copy of this authorization is enclosed herewith.

Respectfully submitted,
THE PATEL LAW FIRM, P.C.

Date: June 10th, 2007

Natu J. Patel
USPTO Reg. No. 39,559

NJP/lv/ec
Enclosure:

THE PATEL LAW FIRM, P.C.
2532 Dupont Drive
Irvine, California 92612-1524
Business: (949) 955-1077
Facsimile: (949) 955-1877
www.thepatellawfirm.com
NPatel@thePatelLawFirm.com

PAGE 26/27 * RCVD AT 6/10/2007 3:06:20 PM [Eastern Daylight Time] * SVR:USPTO-EFXRF-1/21 * DNIS:2738300 * CSID:19499551877 * DURATION (mm-ss):10-22

SONY EXHIBIT 1005 – 0748

RECEIVED
CENTRAL FAX CENTER
JUN 11 2007

PTO/SB/21 (04-07)
Approved for use through 09/30/2007. OMB 0651-0031
U.S. Patent and Trademark Office; U.S. DEPARTMENT OF COMMERCE
Under the Paperwork Reduction Act of 1995, no persons are required to respond to a collection of information unless it displays a valid OMB control number.

TRANSMITTAL FORM

(to be used for all correspondence after initial filing)

Total Number of Pages in This Submission

Application Number	10/648,012
Filing Date	08/26/2003
First Named Inventor	Woolfork, C. Earl
Art Unit	2615
Examiner Name	Flanders, Andrew C.
Attorney Docket Number	W003-4000

ENCLOSURES *(Check all that apply)*

- ☐ Fee Transmittal Form
  - ☐ Fee Attached
- ☑ Amendment/Reply
  - ☐ After Final
  - ☐ Affidavits/declaration(s)
- ☐ Extension of Time Request
- ☐ Express Abandonment Request
- ☐ Information Disclosure Statement
- ☐ Certified Copy of Priority Document(s)
- ☐ Reply to Missing Parts/ Incomplete Application
  - ☐ Reply to Missing Parts under 37 CFR 1.52 or 1.53
- ☐ Drawing(s)
- ☐ Licensing-related Papers
- ☐ Petition
- ☐ Petition to Convert to a Provisional Application
- ☐ Power of Attorney, Revocation Change of Correspondence Address
- ☐ Terminal Disclaimer
- ☐ Request for Refund
- ☐ CD, Number of CD(s) _____
  - ☐ Landscape Table on CD
- ☐ After Allowance Communication to TC
- ☐ Appeal Communication to Board of Appeals and Interferences
- ☐ Appeal Communication to TC **(Appeal Notice, Brief, Reply Brief)**
- ☐ Proprietary Information
- ☐ Status Letter
- ☐ Other Enclosure(s) (please identify below):

Remarks

This correspondence is being transmitted by Fax - (571) 273-8300

SIGNATURE OF APPLICANT, ATTORNEY, OR AGENT

Firm Name	The Patel Law Firm, P.C.		
Signature	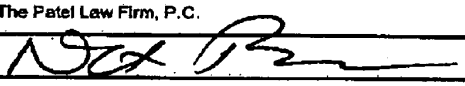		
Printed name	Natu J. Patel		
Date	June 10, 2007	Reg. No.	39,559

CERTIFICATE OF TRANSMISSION/MAILING

I hereby certify that this correspondence is being facsimile transmitted to the USPTO or deposited with the United States Postal Service with sufficient postage as first class mail in an envelope addressed to: Commissioner for Patents, P.O. Box 1450, Alexandria, VA 22313-1450 on the date shown below:

Signature	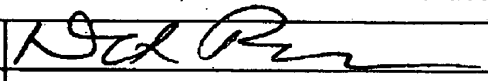		
Typed or printed name	Natu J. Patel	Date	June 10, 2007

This collection of information is required by 37 CFR 1.5. The information is required to obtain or retain a benefit by the public which is to file (and by the USPTO to process) an application. Confidentiality is governed by 35 U.S.C. 122 and 37 CFR 1.11 and1.14. This collection is estimated to 2 hours to complete, including gathering, preparing, and submitting the completed application form to the USPTO. Time will vary depending upon the individual case. Any comments on the amount of time you require to complete this form and/or suggestions for reducing this burden, should be sent to the Chief Information Officer, U.S. Patent and Trademark Office, U.S. Department of Commerce, P.O. Box 1450, Alexandria, VA 22313-1450. DO NOT SEND FEES OR COMPLETED FORMS TO THIS ADDRESS. **SEND TO: Commissioner for Patents, P.O. Box 1450, Alexandria, VA 22313-1450.**

If you need assistance in completing the form, call 1-800-PTO-9199 and select option 2.

RECEIVED
CENTRAL FAX CENTER
JUN 11 2007

IN THE UNITED STATES PATENT AND TRADEMARK OFFICE

Application No.:	10/648,012
Applicant:	WOOLFORK, C. Earl
Filing Date:	08/26/2003
Title:	WIRELESS DIGITAL AUDIO MUSIC SYSTEM
TC/A.U.:	2615
Confirmation No.	3337
Examiner:	FLANDERS, Andrew C.
Docket No.	W003-4000

Mail Stop Amendment
Commissioner for Patents
Post Office Box 1450
Alexandria, Virginia 22313-1450

RESPONSE TO OFFICE ACTION

Dear Sir:

In response to the Office Action (OA) of March 30, 2007, please amend without prejudice the above-identified patent application as follows:

Amendments to the Claims are reflected in the listing of claims, which begins on page 2 of this paper.

Remarks/Arguments begin on page 16 of this paper.

PAGE 2/4 * RCVD AT 6/10/2007 2:45:19 PM [Eastern Daylight Time] * SVR:USPTO-EFXRF-1/17 * DNIS:2738300 * CSID:949 955 1877 * DURATION (mm-ss):01-24

AMENDMENT TO CLAIMS:

This listing of claims will replace all prior versions, and listings, of claims in the application. Six new claims, 54-59 have been added.

Listing of Claims:

Claims 1 - 18 (canceled).

19. (Currently Amended) A wireless digital audio system, comprising:

at least one audio source to produce an audio output representative of music;

at least one digital audio transmitter operatively coupled to said at least one audio source, said at least one audio transmitter comprising:

a first analog low pass filter receiving the audio output from said at least one audio source;

a digital low pass filter;

an analog-to-digital converter (ADC) operatively coupled between said first analog and digital low pass filters;

a first encoder receiving output from said digital low pass filter and being configured to reduce intersymbol interference (ISI);

a second channel encoder operatively coupled to said first encoder and adapted to reduce transmission errors;

a digital modulator operatively coupled to said second channel encoder; and

a differential phase shift key (DPSK) module receiving output from said digital modulator and a unique user code bit sequence and being configured for direct sequence spread spectrum (DSSS) communication, said DPSK module transmitting a corresponding DSSS signal having said audio output representative of the music and the unique user code bit sequence;

at least one audio receiver configured for digital wireless communication with said at least one audio transmitter ~~and utilizing embedded fuzzy logic to optimize digital signal processing~~, said at least one audio receiver comprising:

PAGE 3/4 * RCVD AT 6/10/2007 2:45:19 PM [Eastern Daylight Time] * SVR:USPTO-EFXRF-1/17 * DNIS:2738300 * CSID:949 955 1877 * DURATION (mm-ss):01-24

SONY EXHIBIT 1005 – 0751

PAGE 4/4 * RCVD AT 6/10/2007 2:45:19 PM [Eastern Daylight Time] * SVR:USPTO-EFXRF-1/17 * DNIS:2738300 * CSID:949 955 1877 * DURATION (mm-ss):01-24

BEST AVAILABLE COPY

PTO/SB/06 (07-06)
Approved for use through 1/31/2007. OMB 0651-0032
U.S. Patent and Trademark Office; U.S. DEPARTMENT OF COMMERCE
Under the Paperwork Reduction Act of 1995, no persons are required to respond to a collection of information unless it displays a valid OMB control number.

PATENT APPLICATION FEE DETERMINATION RECORD Substitute for Form PTO-875	Application or Docket Number 10/648,012	Filing Date 08/26/2003	☐ To be Mailed

APPLICATION AS FILED – PART I

	(Column 1)	(Column 2)	SMALL ENTITY ☒		OR	OTHER THAN SMALL ENTITY	
FOR	NUMBER FILED	NUMBER EXTRA	RATE ($)	FEE ($)		RATE ($)	FEE ($)
☐ BASIC FEE (37 CFR 1.16(a), (b), or (c))	N/A	N/A	N/A			N/A	
☐ SEARCH FEE (37 CFR 1.16(k), (l), or (m))	N/A	N/A	N/A			N/A	
☐ EXAMINATION FEE (37 CFR 1.16(o), (p), or (q))	N/A	N/A	N/A			N/A	
TOTAL CLAIMS (37 CFR 1.16(i))	minus 20 =	*	X $ =		OR	X $ =	
INDEPENDENT CLAIMS (37 CFR 1.16(h))	minus 3 =	*	X $ =			X $ =	
☐ APPLICATION SIZE FEE (37 CFR 1.16(s))	If the specification and drawings exceed 100 sheets of paper, the application size fee due is $250 ($125 for small entity) for each additional 50 sheets or fraction thereof. See 35 U.S.C. 41(a)(1)(G) and 37 CFR 1.16(s).						
☐ MULTIPLE DEPENDENT CLAIM PRESENT (37 CFR 1.16(j))							
* If the difference in column 1 is less than zero, enter "0" in column 2.			TOTAL			TOTAL	

APPLICATION AS AMENDED – PART II

AMENDMENT 01/29/2007	(Column 1) CLAIMS REMAINING AFTER AMENDMENT		(Column 2) HIGHEST NUMBER PREVIOUSLY PAID FOR	(Column 3) PRESENT EXTRA	SMALL ENTITY RATE ($)	ADDITIONAL FEE ($)	OR	OTHER THAN SMALL ENTITY RATE ($)	ADDITIONAL FEE ($)
Total (37 CFR 1.16(i))	* 31	Minus	** 48	= 0	X $25 =	0	OR	X $ =	
Independent (37 CFR 1.16(h))	* 9	Minus	*** 19	= 0	X $100 =	0	OR	X $ =	
☐ Application Size Fee (37 CFR 1.16(s))									
☐ FIRST PRESENTATION OF MULTIPLE DEPENDENT CLAIM (37 CFR 1.16(j))							OR		
					TOTAL ADD'L FEE	0	OR	TOTAL ADD'L FEE	

AMENDMENT 6/10/06	(Column 1) CLAIMS REMAINING AFTER AMENDMENT		(Column 2) HIGHEST NUMBER PREVIOUSLY PAID FOR	(Column 3) PRESENT EXTRA	RATE ($)	ADDITIONAL FEE ($)		RATE ($)	ADDITIONAL FEE ($)
Total (37 CFR 1.16(i))	* 37	Minus	** 48	=	X $ =		OR	X $ =	
Independent (37 CFR 1.16(h))	* 11	Minus	*** 19	=	X $ =		OR	X $ =	
☐ Application Size Fee (37 CFR 1.16(s))									
☐ FIRST PRESENTATION OF MULTIPLE DEPENDENT CLAIM (37 CFR 1.16(j))							OR		
					TOTAL ADD'L FEE		OR	TOTAL ADD'L FEE	

* If the entry in column 1 is less than the entry in column 2, write "0" in column 3.
** If the "Highest Number Previously Paid For" IN THIS SPACE is less than 20, enter "20".
*** If the "Highest Number Previously Paid For" IN THIS SPACE is less than 3, enter "3".
The "Highest Number Previously Paid For" (Total or Independent) is the highest number found in the appropriate box in column 1.

Legal Instrument Examiner:
Patsy Zimmerman

This collection of information is required by 37 CFR 1.16. The information is required to obtain or retain a benefit by the public which is to file (and by the USPTO to process) an application. Confidentiality is governed by 35 U.S.C. 122 and 37 CFR 1.14. This collection is estimated to take 12 minutes to complete, including gathering, preparing, and submitting the completed application form to the USPTO. Time will vary depending upon the individual case. Any comments on the amount of time you require to complete this form and/or suggestions for reducing this burden, should be sent to the Chief Information Officer, U.S. Patent and Trademark Office, U.S. Department of Commerce, P.O. Box 1450, Alexandria, VA 22313-1450. DO NOT SEND FEES OR COMPLETED FORMS TO THIS ADDRESS. **SEND TO: Commissioner for Patents, P.O. Box 1450, Alexandria, VA 22313-1450.**

If you need assistance in completing the form, call 1-800-PTO-9199 and select option 2.

EAST Search History

Ref #	Hits	Search Query	DBs	Default Operator	Plurals	Time Stamp
L1	3	("2004/0223622").URPN.	USPAT	OR	OFF	2007/07/16 11:25
L2	1	("5771441").PN.	US-PGPUB; USPAT	OR	OFF	2007/07/16 11:25
L3	60	("2236946" | "2828413" | "2840694" | "3080785" | "3085460" | "3087117" | "3296916" | "3579211" | "3743751" | "3781451" | "3825666" | "3863157" | "3901118" | "3906160" | "4004228" | "4229826" | "4335930" | "4344184" | "4369521" | "4430757" | "4453269" | "4464792" | "4471493" | "4612688" | "4647135" | "4721926" | "4794622" | "4845751" | "4899388" | "4988957" | "5025704" | "5214568").PN. OR ("5771441").URPN.	US-PGPUB; USPAT; USOCR	OR	OFF	2007/07/16 11:26
L4	2	l3 and cdma	US-PGPUB; USPAT; USOCR	OR	OFF	2007/07/16 11:26
S1	9	FHSS with unique with user	US-PGPUB; USPAT	OR	OFF	2007/03/20 09:30
S2	6	S1 and @ad<"20011221"	US-PGPUB; USPAT	OR	OFF	2006/05/02 17:45
S3	0	FHSS with unique adj hop	US-PGPUB; USPAT	OR	OFF	2006/05/02 17:46
S4	0	FHSS with each adj user	US-PGPUB; USPAT	OR	OFF	2006/05/02 17:46
S5	0	FHSS with individual adj user	US-PGPUB; USPAT	OR	OFF	2006/05/02 17:47
S6	0	(FHSS or "frequency hopping spread spectrum") with individual adj user	US-PGPUB; USPAT	OR	OFF	2006/05/02 17:47
S7	0	(FHSS or "frequency hopping spread spectrum") near user same unique	US-PGPUB; USPAT	OR	OFF	2006/05/02 17:47
S8	9	(FHSS or "frequency hopping spread spectrum") with user same unique	US-PGPUB; USPAT	OR	OFF	2006/05/02 17:48
S9	17	(FHSS or "frequency hopping spread spectrum") same unique same user	US-PGPUB; USPAT	OR	OFF	2006/05/02 17:48
S10	6	S9 and @ad<"20011221"	US-PGPUB; USPAT	OR	OFF	2006/05/02 17:48
S11	9	(FHSS or "frequency hopping spread spectrum") same multiple adj user!	US-PGPUB; USPAT	OR	OFF	2006/05/03 10:32
S12	91	(FHSS or "frequency hopping spread spectrum") same (pn or "hopping code")	US-PGPUB; USPAT	OR	OFF	2006/05/02 17:50

SONY EXHIBIT 1005 – 0754

EAST Search History

S13	13	(FHSS or "frequency hopping spread spectrum") with ("hopping code")	US-PGPUB; USPAT	OR	OFF	2006/05/02 17:50
S14	3	S13 and @ad<"20011221"	US-PGPUB; USPAT	OR	OFF	2006/05/02 17:51
S15	1	("5946343").PN.	US-PGPUB; USPAT	OR	OFF	2006/05/03 11:46
S16	1	("6342844").PN.	US-PGPUB; USPAT	OR	OFF	2006/05/03 11:46
S17	1	("5771441").PN.	US-PGPUB; USPAT	OR	OFF	2006/08/28 15:55
S18	10725	"rechargeable battery" and @ad<"20011220"	US-PGPUB; USPAT	OR	OFF	2006/08/28 15:55
S19	376	"rechargeable battery".ti. and @ad<"20011220"	US-PGPUB; USPAT	OR	OFF	2006/08/28 15:55
S20	17	("rechargeable battery" and portable).ti. and @ad<"20011220"	US-PGPUB; USPAT	OR	OFF	2006/08/28 15:57
S21	3623043	("rechargeable battery" and portable) with mah andd @ad<"20011220"	US-PGPUB; USPAT	OR	OFF	2006/08/28 15:57
S22	0	("rechargeable battery" and portable) with mah and @ad<"20011220"	US-PGPUB; USPAT	OR	OFF	2006/08/28 15:57
S23	3623041	("rechargeable battery" and portable) with ma-h andd @ad<"20011220"	US-PGPUB; USPAT	OR	OFF	2006/08/28 15:57
S24	3623041	("rechargeable battery" and portable) with "ma-h" andd @ad<"20011220"	US-PGPUB; USPAT	OR	OFF	2006/08/28 15:57
S25	0	("rechargeable battery" and portable) with "ma-h" and @ad<"20011220"	US-PGPUB; USPAT	OR	OFF	2006/08/28 15:57
S26	640693	("rechargeable battery" and portable) with milliamp hours and @ad<"20011220"	US-PGPUB; USPAT	OR	OFF	2006/08/28 15:57
S27	18	("rechargeable battery" and portable) and "milliamp hours" and @ad<"20011220"	US-PGPUB; USPAT	OR	OFF	2006/08/31 12:17
S28	29	"5491839"	US-PGPUB; USPAT	OR	OFF	2006/08/30 12:56
S29	1	("5491839").PN.	US-PGPUB; USPAT	OR	OFF	2006/08/30 12:56
S30	1	("5771441").PN.	US-PGPUB; USPAT	OR	OFF	2006/08/30 12:56
S31	1	("6,107,147").PN.	US-PGPUB; USPAT	OR	OFF	2006/08/31 12:17

SONY EXHIBIT 1005 – 0755

EAST Search History

S32	0	("10648012").PN.	US-PGPUB; USPAT	OR	OFF	2006/09/25 09:26
S33	1	("5946343").PN.	US-PGPUB; USPAT	OR	OFF	2006/09/25 09:50
S34	422	(455/564.1,412,413).CCLS.	US-PGPUB; USPAT	OR	OFF	2006/09/25 09:50
S35	5294	(375/219,295-297,346,348).CCLS.	US-PGPUB; USPAT	OR	OFF	2006/09/25 10:02
S36	1	("20040223622").PN.	US-PGPUB; USPAT	OR	OFF	2006/09/25 10:04
S37	1	("5946343").PN.	US-PGPUB; USPAT	OR	OFF	2006/09/25 10:05
S38	1	("7,050,419").PN.	US-PGPUB; USPAT	OR	OFF	2007/03/20 09:32
S39	1	("20010025358").PN.	US-PGPUB; USPAT	OR	OFF	2007/03/20 09:37
S40	2618	(375/341,140,147).CCLS.	US-PGPUB; USPAT	OR	OFF	2007/03/20 09:37
S41	1807	S40 and @ad<"20011220"	US-PGPUB; USPAT	OR	OFF	2007/03/20 09:38
S42	8	("2001/0025358").URPN.	USPAT	OR	OFF	2007/03/20 09:51
S43	0	("2002/0025009").URPN.	USPAT	OR	OFF	2007/03/20 09:59
S44	0	("2002/0025009").URPN.	USPAT	OR	OFF	2007/03/20 10:01
S45	12	("20020159543" | "5434623" | "5867532" | "5973642" | "6243423" | "6327314" | "6339612" | "6459728" | "6477210" | "6480554" | "6654429" | "6671338").PN. OR ("7099413").URPN.	US-PGPUB; USPAT; USOCR	OR	OFF	2007/03/20 10:08
S46	74	"band pass" and demodulator and interleaver and "viterbi decoder"	US-PGPUB; USPAT; USOCR	OR	OFF	2007/03/20 10:08
S47	59	S46 and @ad<"20011220"	US-PGPUB; USPAT; USOCR	OR	OFF	2007/03/20 10:08
S48	17	("4278978" | "4635063" | "5175558" | "5493307").PN. OR ("6130643"). URPN.	US-PGPUB; USPAT; USOCR	OR	OFF	2007/03/20 10:15
S49	1	("5175558").PN.	US-PGPUB; USPAT	OR	OFF	2007/03/20 10:16
S50	13	("4651155" | "4931977").PN. OR ("5175558").URPN.	US-PGPUB; USPAT; USOCR	OR	OFF	2007/03/20 10:34
S51	1	("5946343").PN.	US-PGPUB; USPAT	OR	OFF	2007/03/20 11:40

SONY EXHIBIT 1005 – 0756

EAST Search History

S52	7186	(375/295,146,130,340,316,148).CCLS.	US-PGPUB; USPAT	OR	OFF	2007/03/20 11:41
S53	4473	S52 and @ad<"20011220"	US-PGPUB; USPAT	OR	OFF	2007/03/20 11:41
S54	1	("20040223622").PN.	US-PGPUB; USPAT	OR	OFF	2007/03/21 12:11
S55	5	"reed solomon" with "intersymbol interference"	US-PGPUB; USPAT	OR	OFF	2007/03/21 12:13
S56	30	"reed solomon" same "intersymbol interference"	US-PGPUB; USPAT	OR	OFF	2007/03/21 12:13
S57	21	S56 and @ad<"20011220"	US-PGPUB; USPAT	OR	OFF	2007/03/21 12:27
S58	1	("20030045235").PN.	US-PGPUB; USPAT	OR	OFF	2007/03/21 12:37
S59	1	("5790595").PN.	US-PGPUB; USPAT	OR	OFF	2007/03/21 12:37
S60	2435	((375/262,265,341) or (714/794, 795)).CCLS.	US-PGPUB; USPAT	OR	OFF	2007/03/24 09:15
S62	56	"375".clas. and "fuzzy logic"	US-PGPUB; USPAT	OR	OFF	2007/03/26 11:04
S64	1	("4970637").PN.	US-PGPUB; USPAT	OR	OFF	2007/03/28 13:46
S65	755	(audio sound music voice) same (a/d "analog to digital") same (lpf "low pass")	US-PGPUB; USPAT	OR	OFF	2007/03/28 13:46
S66	282	(audio sound music voice) with (a/d "analog to digital") with ((lpf "low pass") and "digital")	US-PGPUB; USPAT	OR	OFF	2007/03/28 13:47
S67	227	(audio sound music voice) with (a/d "analog to digital") with ((lpf "low pass") and "digital") and @ad<"20011221"	US-PGPUB; USPAT	OR	OFF	2007/03/28 15:33
S68	34712	"band pass filter" bpf with "direct conversion receiver"	US-PGPUB; USPAT	OR	OFF	2007/03/28 15:33
S69	35	("band pass filter" bpf) with "direct conversion receiver"	US-PGPUB; USPAT	OR	OFF	2007/03/28 15:33
S70	8	S69 and @ad<"20011221"	US-PGPUB; USPAT	OR	OFF	2007/03/28 15:55
S71	1	("20030045235").PN.	US-PGPUB; USPAT	OR	OFF	2007/03/28 16:16
S72	1	("20040223622").PN.	US-PGPUB; USPAT	OR	OFF	2007/03/28 16:20
S73	1	("5946343").PN.	US-PGPUB; USPAT	OR	OFF	2007/03/28 16:27

SONY EXHIBIT 1005 – 0757

EAST Search History

S74	364	"64-ary"	US-PGPUB; USPAT	OR	OFF	2007/03/28 16:27
S75	74	"64-ary" near modulat$4	US-PGPUB; USPAT	OR	OFF	2007/03/28 16:27
S76	46	S75 and @ad<"20011120"	US-PGPUB; USPAT	OR	OFF	2007/03/28 16:27
S77	2	(("4970637") or ("5790595")).PN.	US-PGPUB; USPAT	OR	OFF	2007/07/16 09:58
S78	3	(("4970637") or ("5790595") or ("20040223622")).PN.	US-PGPUB; USPAT	OR	OFF	2007/07/16 09:58

SONY EXHIBIT 1005 – 0758

UNITED STATES PATENT AND TRADEMARK OFFICE

UNITED STATES DEPARTMENT OF COMMERCE
United States Patent and Trademark Office
Address: COMMISSIONER FOR PATENTS
P.O. Box 1450
Alexandria, Virginia 22313-1450
www.uspto.gov

APPLICATION NO.	FILING DATE	FIRST NAMED INVENTOR	ATTORNEY DOCKET NO.	CONFIRMATION NO.
10/648,012	08/26/2003	C. Earl Woolfork	W003-4000	3337

48162 7590 07/23/2007

THE PATEL LAW FIRM, P.C.
2532 DUPONT DRIVE
IRVINE, CA 92612

EXAMINER	
FLANDERS, ANDREW C	
ART UNIT	PAPER NUMBER
2615	

MAIL DATE	DELIVERY MODE
07/23/2007	PAPER

Please find below and/or attached an Office communication concerning this application or proceeding.

The time period for reply, if any, is set in the attached communication.

SONY EXHIBIT 1005 – 0759

Office Action Summary	Application No.	Applicant(s)	
	10/648,012	WOOLFORK, C. EARL	
	Examiner	Art Unit	
	Andrew C. Flanders	2615	

-- The MAILING DATE of this communication appears on the cover sheet with the correspondence address --

Period for Reply

A SHORTENED STATUTORY PERIOD FOR REPLY IS SET TO EXPIRE 3 MONTH(S) OR THIRTY (30) DAYS, WHICHEVER IS LONGER, FROM THE MAILING DATE OF THIS COMMUNICATION.

- Extensions of time may be available under the provisions of 37 CFR 1.136(a). In no event, however, may a reply be timely filed after SIX (6) MONTHS from the mailing date of this communication.
- If NO period for reply is specified above, the maximum statutory period will apply and will expire SIX (6) MONTHS from the mailing date of this communication.
- Failure to reply within the set or extended period for reply will, by statute, cause the application to become ABANDONED (35 U.S.C. § 133). Any reply received by the Office later than three months after the mailing date of this communication, even if timely filed, may reduce any earned patent term adjustment. See 37 CFR 1.704(b).

Status

1)☒ Responsive to communication(s) filed on *11 June 2007*.

2a)☒ This action is **FINAL**. 2b)☐ This action is non-final.

3)☐ Since this application is in condition for allowance except for formal matters, prosecution as to the merits is closed in accordance with the practice under *Ex parte Quayle*, 1935 C.D. 11, 453 O.G. 213.

Disposition of Claims

4)☒ Claim(s) *19-34,37,38 and 41-59* is/are pending in the application.

4a) Of the above claim(s) _____ is/are withdrawn from consideration.

5)☐ Claim(s) _____ is/are allowed.

6)☒ Claim(s) *19-34,37,38 and 41-59* is/are rejected.

7)☐ Claim(s) _____ is/are objected to.

8)☐ Claim(s) _____ are subject to restriction and/or election requirement.

Application Papers

9)☐ The specification is objected to by the Examiner.

10)☐ The drawing(s) filed on _____ is/are: a)☐ accepted or b)☐ objected to by the Examiner.

Applicant may not request that any objection to the drawing(s) be held in abeyance. See 37 CFR 1.85(a).

Replacement drawing sheet(s) including the correction is required if the drawing(s) is objected to. See 37 CFR 1.121(d).

11)☐ The oath or declaration is objected to by the Examiner. Note the attached Office Action or form PTO-152.

Priority under 35 U.S.C. § 119

12)☐ Acknowledgment is made of a claim for foreign priority under 35 U.S.C. § 119(a)-(d) or (f).

a)☐ All b)☐ Some * c)☐ None of:

1.☐ Certified copies of the priority documents have been received.

2.☐ Certified copies of the priority documents have been received in Application No. _____.

3.☐ Copies of the certified copies of the priority documents have been received in this National Stage application from the International Bureau (PCT Rule 17.2(a)).

* See the attached detailed Office action for a list of the certified copies not received.

Attachment(s)

1) ☒ Notice of References Cited (PTO-892)
2) ☐ Notice of Draftsperson's Patent Drawing Review (PTO-948)
3) ☐ Information Disclosure Statement(s) (PTO/SB/08) Paper No(s)/Mail Date _____.
4) ☐ Interview Summary (PTO-413) Paper No(s)/Mail Date. _____.
5) ☐ Notice of Informal Patent Application
6) ☐ Other: _____.

DETAILED ACTION

Response to Arguments

Applicant's arguments filed 10 June 2007 have been fully considered but they are not persuasive.

Applicant alleges:

Claim 33 recites:

> ...at least one module adapted to audibly reproduce said processed CDMA signal, said CDMA communication configuration providing a user with independent audio reproduction free of interference from other users Or wireless devices. (Emphasis added).
>
> The above emphasized claim language is not taught or suggested by Lindemann. Lindemann does not address reproductioh that is interference free. ~~Furthermore~~ Furthermore, Applicant observes that Lindemann does not mention interference or address the problem identified by Applicant and thus Applicant's solution to provide a user with independent audio reproduction free of interference from other users or wireless devices. Instead, Lindemann is directed to digital wireless loudspeaker system and the delivery of signals to the speakers. Thus, Lindemann is not directed to a system capable of (1) providing a user with independent audio reproduction; and (2) reproduction free of interference from other users Or wireless devices. By contrast, Lindemann simply provides a "loudspeaker system" where anyone can listen.

Examiner respectfully disagrees. As stated in the rejection, the speakers reproduce audio independently without interference from other speakers. This is more clearly shown in paragraph 66 of Lindemann which states that certain groups of

speakers can be selected and independently operated using Status messages embedded in the audio packet headers and Status decode logic.

The remaining arguments regarding the claims are moot in view of the new rejections necessitated by Applicants amendment.

Claim Rejections - 35 USC § 112

The following is a quotation of the first paragraph of 35 U.S.C. 112:

> The specification shall contain a written description of the invention, and of the manner and process of making and using it, in such full, clear, concise, and exact terms as to enable any person skilled in the art to which it pertains, or with which it is most nearly connected, to make and use the same and shall set forth the best mode contemplated by the inventor of carrying out his invention.

Claims 30, 53, 56 and 58 are rejected under 35 U.S.C. 112, first paragraph, as failing to comply with the enablement requirement. The claim(s) contains subject matter which was not described in the specification in such a way as to enable one skilled in the art to which it pertains, or with which it is most nearly connected, to make and/or use the invention. Claim 30 recites that the receiver uses embedded fuzzy logic to enhance detection of the unique user code in said transmitted DSSS signal. However, Applicant's Fig. 1, shows a fuzzy logic detector (61) inside of the receiver unit (50). Receiver unit 50 is fully disclosed in Fig. 3, however, neither the specification, nor the drawings provide any detail as to how any fuzzy logic is used within the components of Fig. 3 to enhance detection of the unique user code.

Claim Rejections - 35 USC § 102

The following is a quotation of the appropriate paragraphs of 35 U.S.C. 102 that form the basis for the rejections under this section made in this Office action:

> A person shall be entitled to a patent unless –
>
> (e) the invention was described in (1) an application for patent, published under section 122(b), by another filed in the United States before the invention by the applicant for patent or (2) a patent granted on an application for patent by another filed in the United States before the invention by the applicant for patent, except that an international application filed under the treaty defined in section 351(a) shall have the effects for purposes of this subsection of an application filed in the United States only if the international application designated the United States and was published under Article 21(2) of such treaty in the English language.

Claims 33 ~~and~~ 34 and 37-38 are rejected under 35 U.S.C. 102(e) as being anticipated by Lindemann (U.S. Patent Application 2004/0223622).

Regarding **Claim 33**, Lindemann discloses:

A wireless digital audio system (Fig. 15B and Fig 17), comprising:

at least one audio source (Fig. 15B, 133, 134, 135);

at least one digital audio transmitter operatively coupled to said at least one audio source (Fig. 15B 131);

at least one audio receiver adapted for digital wireless communication with said at least one audio transmitter (Fig. 15B, 130 and Fig. 17 300)

each of said at least one digital audio transmitter and receiver being configured for code division multiple access (CDMA) communication (para 0075); and

at least one module adapted to audibly reproduce said processed CDMA signal, said CDMA communication configuration providing a user with independent audio reproduction free of interference from other users or wireless devices (Fig. 15A; the speakers reproduce, which receive the audio without interference from the other speakers).

Regarding **Claim 34**, in addition to the elements stated in the rejection of claim 33, Lindemann further discloses:

At least one module adapted to amplify said processed CDMA signals (Fig. 17 element 301).

Regarding **Claims 37 and 38**, in addition to the elements stated above regarding claims 16 and 17, Lindemann further discloses:

audio source provides analog output in the approximate range of 20 Hz to 20 kHz (i.e. audible range produced by the tweeters and woofers in Fig. 1; provided by the audio source input)

Claim Rejections - 35 USC § 103

The following is a quotation of 35 U.S.C. 103(a) which forms the basis for all obviousness rejections set forth in this Office action:

> (a) A patent may not be obtained though the invention is not identically disclosed or described as set forth in section 102 of this title, if the differences between the subject matter sought to be patented and the prior art are such that the subject matter as a whole would have been obvious at the time the

invention was made to a person having ordinary skill in the art to which said subject matter pertains. Patentability shall not be negatived by the manner in which the invention was made.

Claims 19 – 29 and 43 – 52 are rejected under 35 U.S.C. 103(a) as being unpatentable over Lindemann (U.S. Patent Application 2004/0223622) in view of Sato (U.S. Patent 4,970,637).

Regarding **Claim 19**, Lindemann discloses:

A wireless digital audio system (abstract) comprising:

at least one audio source to produce an audio output representative of music (Fig. 5 digital audio sample data);

at least one digital audio transmitter operatively coupled to said at least one audio source (Figs. 4 and 5).11

Lindemann fails to explicitly disclose that the digital audio transmitter comprises:

a first analog low pass filter receiving audio input from said at least one audio source;

a digital low pass filter;

an analog-to-digital converter (ADC) operatively coupled between said first analog and digital low pass filters.

However, Lindemann does disclose inputting a digital audio signal. This signal must have been converted from the analog domain at some point in time. Further, Lindemann discloses a loudspeaker system for a stereo, stereo's are well known to include inputs such as microphones which input an analog audio signal. Filtering and

converting from analog to digital and filtering again is notoriously well known in the art. For example, see Sato Fig.1.

Modifying Lindemann's transmitter to accept an analog input signal and convert it for transmission in the digital domain as taught by Sato discloses:

a first analog low pass filter receiving audio input from said at least one audio source (Sato Fig. 1which receives an analog input);

a digital low pass filter (Fig. 1 element 3; Max filter 3 operates on a digital signal and thus can be considered a 'digital low pass filter');

an analog-to-digital converter (ADC) operatively coupled between said first analog and digital low pass filters (Sato element 2).

It would have been obvious to one of ordinary skill in the art to modify Lindemann to accept an analog signal from a device such as a microphone and use a well known method such as the method taught by Sato. One would have been motivated to use the conversion technique to reduce noise and other errors.

The combination further

a first encoder configured to reduce intersymbol interference (ISI) (Fig. 5 element 502 which is a Reed Solomon Encoder and Interleaver; it is known in the art to configure Reed Solomon encoding/interleaving to reduce ISI as is shown by Roberts 6,418,558. Reducing ISI is a desirable feature to any digital transmission);

a second channel encoder operatively coupled to said first encoder and adapted to reduce transmission errors(Fig. 5 element 500; para 35 which indicates 500 is used for error correction);

a digital modulator operatively coupled to said second channel encoder (Fig. 4 element 405 which includes a 'modulator' and 'DSSS spreader' which indicates these are two separate elements);

a phase shift key a module receiving output from said digital modulator and a unique user code bit sequence (i.e. status messages are included in the transmission frames to control speaker attributes such as speaker group; para 11; and also see paras 64 on discussing channel selection) and being configured for direct sequence spread spectrum (DSSS)communication, said PSK module transmitting a corresponding DSSS signal having said audio output representative of the music and the unique user code bit sequence (Fig. 4 element 405, DSSS spreader using DQPSK or DBPSK; which outputs the music stream along with the status messages).

Lindemann does not explicitly disclose DPSK as claimed, however, DPSK is a notoriously well known alternative for DQPSK. When designing a transmitter, one must balance many various factors and depending on the characteristics desired (number of bits transferred, complexity and arrangement of the constellation), one may decide to implement a DPSK method in place of a DQPSK or DBPSK method.

The combination further discloses:

at least one audio receiver configured for digital wireless communication with said at least one audio transmitter (Fig. 3),

said at least one audio receiver comprising:

a band pass filter (BPF) configured to process said transmitted DSSS signal (BPF not shown in Fig. 3, para 57 of Lindemann);

a direct conversion module receiving output from said BPF and being configured to capture the unique user code bit sequence embedded in said processed DSSS signal (Fig. 3 301-304; directly converts the received signal to be ready for despreading);

a digital demodulator adapted to process output from said direct conversion module (Fig. 3 element 305);

a Viterbi decoder operatively coupled to said digital demodulator and generating a corresponding digital output (Fig. 8, 800);

a source decoder processing said digital output from said Viterbi decoder and being configured to decode the digital signal encoded by said first encoder (Fig. 8, 802).

The combination fails to explicitly disclose a second analog lowpass filter. However, it would have been obvious to provide an analog filter for the desired purpose of smoothing the analog output after a digital to analog conversion. Low pass filtering after a D/A is notoriously well known in the art, see Schotz 5,946,343 Fig. 7B element 218.

The combination further discloses:

a digital-to-analog converter (DAC) operatively coupled between said source decoder and said second analog low pass filter (Fig. 10 element 1005; the analog filter of Schotz being provided after the D/A), said second analog low pass filter generating the audio output representative of the music (i.e. see the above discussion of the second low pass filter); and

at least one module adapted to reproduce said audio output, said audio output representative of said music, if the unique user code bit sequence is recognized (i.e.

enabling a specific group of speakers; para 66) having been wirelessly transmitted from said at least one audio source to a user for private audio reproduction of said music without interference form other users or wireless devices (Fig. 1, the speakers, which receive the audio without interference from the other speakers; further certain groups can be enabled as shown in para 66 and thus can be enjoyed without interference from other speakers and thus can be considered to be private).

Regarding **Claim 20**, in addition to the elements stated above regarding claim 19, the combination further discloses:

wherein said BPF is a wideband BPF (i.e. the band pass filter left out of Fig. 3; para 53; wideband being met by any band that could be considered 'wide'; i.e. a variety of well known configurations and choices available)

Regarding **Claim 21**, in addition to the elements stated above regarding claim 19, the combination further discloses:

wherein said modulator is a 64-Ary modulator (para 36, the modulator uses M-Ary, it is notoriously well known that M can be a variety of numbers depending on the transmission scheme, 64 being one possible obvious choice).

Regarding **Claim 22**, in addition to the elements stated above regarding claim 19, the combination further discloses:

wherein said modulator is a 64-Ary modulator (para 36, the modulator uses M-Ary, it is notoriously well known that M can be a variety of numbers depending on the transmission scheme, 64 being one possible obvious choice; thus the demodulator must operate accordingly)

Regarding **Claim 23**, in addition to the elements stated above regarding claim 19, the combination further discloses:

wherein said generated audio output is in the approximate range of 20Hz to 20kHz (i.e. audible range produced by the tweeters and woofers in Fig. 1).

Regarding **Claim 24**, in addition to the elements stated above regarding claim 19, the combination further discloses:

wherein said spread spectrum signal is transmitted at about 2.4GHz via an omni directional antennal (para 89; omni directional antenna being one of many well known and obvious choices for an annenta such as the one used by Fig. 1).

Regarding **Claim 25**, in addition to the elements stated above regarding claim 19, the combination fails to explicitly disclose the tramission power. However, it is notoriously well known to adjust the transmission power in order to achieve a desired transmission distance. It is well known and obvious that in some modifications/variations, a given distance for Lindmann may only require 100 milliwatts.

Regarding **Claim 26**, in addition to the elements stated above regarding claim 19, the combination further discloses:

Wherein said ADC is a 4-bit analog-to-digital converter (the number of bits in the Lidnemenn system is adjustable as is indicated by para 36-48; 4 being one possible obvious variation/modification).

Regarding **Claim 27**, in addition to the elements stated above regarding claim 19, the combination fails to explicitly disclose wherein said at least one audio source is a portable player. However, Examiner takes official notice that portable audio players, such as CD or MP3 players that produce an analog audio output are notoriously well known in the art. It would have been obvious to add one to the combination to be able to play portable media on a home entertainment center such as the one in the combination.

Regarding **Claim 28**, in addition to the elements stated above regarding claim 19, the combination fails to explicitly disclose wherein said at least one audio reproducing module includes at least one headphone speaker. However, the device does include a transducer/speaker. It is notoriously well known in the art that it is obvious to substitute a headphone/earphone device in place of a speaker in the field of audio reproduction. This is typically done for a variety of reasons, including minimizing disturbance caused to others.

Regarding **Claim 29**, in addition to the elements stated above regarding claim 19, the combination further discloses:

wherein said BPF is operatively coupled to at least one antenna configured to receive said transmitted DSSS signal (BPF not shown in Fig. 3, para 57 of Lindemann).

Regarding **Claims 43, 44 and 49 – 52**, claims 43, 44 and 49 - 52 are met by the rejections of claims 19, 27 and 30 as stated above.

Regarding **Claims 45 and 46**, in addition to the elements stated above regarding claims 43 and 44, Lindemann further discloses:

audio source provides analog output in the approximate range of 20 Hz to 20 kHz (i.e. audible range produced by the tweeters and woofers in Fig. 1; provided by the audio source input).

Regarding **Claims 47 and 48**, in addition to the elements stated above regarding claims 43 and 44, Lindemann does not disclose wherein at least one of said digital audio transmitter and receiver is battery powered. However, it would have been obvious to one of ordinary skill in the art at the time of the invention to make the speaker reception portion of Lindemann battery powered. One would have been motivated to do so to be able to place and use the speakers in an area where standard power supplies are unavailable (i.e. outdoors).

Claims 30 – 32 and 53 are rejected under 35 U.S.C. 103(a) as being unpatentable over Lindemann (U.S. Patent Application 2004/0223622) in view of Sato (U.S. Patent 4,970,637) in further view of Benthin (U.S. Patent 5,790,595)

Regarding **Claim 30**, in addition to the elements stated above regarding claim 19, the combination further discloses:

at least one module adapted to amplify said generated audio output (Fig. 10, 1007 and 1008).

The combination does not explicitly disclose that the receiver utilizes embedded fuzzy logic to enhance detection of the unique user code in said transmitted DSSS signal. However, it is well known to use a fuzzy logic detection system in a receiver such as Lindemann's. Benthin disloses a receiver that determines soft data bits (Figure i, function of Figure 2) for additional decoding performance in communication with the received, demodulated signal (output of II) from a spread spectrum demodulator (II) (col. 2, lines 6-31 col. 5, lines 10-25).

Applying this to the receiver of the combination meets the limitation of the receiver utilizing embedded fuzzy logic to enhance detection of the unique user code in said transmitted DSSS signal..

To one of ordinary skill in the art at the time the invention was made, it would have been obvious to implement the soft decision relevant components of Benethin as part of the encoding and signal reception parts of the system of the combination. The motivation behind such a modification would have been that the soft bit determining

circuitry would have improved the reliability of the decision relating to the hard data bit equivalents of the received information, as is taught by Benethin.

Regarding **Claim 31**, in addition to the elements stated above regarding claim 30, the combination further discloses:

wherein said at least one audio amplifying module includes at least one power amplifier, said at least one power amplifier being configured to provide a low distortion audio signal output (Fig. 10, 1007 and 1008; para 73).

Regarding **Claim 32**, in addition to the elements stated above regarding claim 31, the combination further discloses:

wherein said at least one audio reproducing module includes at least one speaker, said at least one speaker receiving said low distortion audio signal output from said at least one power amplifier (Fig. 1, woofer and tweeter).

The combination fails to explicitly disclose that the speaker is a headphone speaker. However, it is notoriously well known in the art that it is obvious to substitute a headphone/earphone device in place of a speaker in the field of audio reproduction. This is typically done for a variety of reasons, including minimizing disturbance caused to others.

Regarding **Claims 53**, claim 53 is met by the rejection of claim 30 as stated above.

Claims 41 and 42 are rejected under 35 U.S.C. 103(a) as being unpatentable over Lindemann (U.S. Patent Application Publication 2004/0223622).

Regarding **Claims 41 and 42**, in addition to the elements stated above regarding claims 33 and 34, Lindemann does not disclose wherein at least one of said digital audio transmitter and receiver is battery powered. However, it would have been obvious to one of ordinary skill in the art at the time of the invention to make the speaker reception portion of Lindemann battery powered. One would have been motivated to do so to be able to place and use the speakers in an area where standard power supplies are unavailable (i.e. outdoors).

Claims 54 and ~~55~~ 57 and 59, are rejected under 35 U.S.C. 103(a) as being unpatentable over Lavelle (U.S. Patent 6,678,892).

Regarding **Claim 54**, Lavelle discloses:

A wireless digital audio system (Fig. 1B), comprising:

an audio source to provide an audio signal representative of music (i.e. various inputs; col. 4 lines 30 – 40);

a batter powered transmitter (i.e. 510; while not clearly stated, either the entertainment device contains integrated batteries or a vehicle requires a battery to power the various electronic components) coupled to said at least one audio source and operative to transmit a code division multiple access (CDMA) communication signal having said audio signal representative of said music and an added unique user code (i.e. transmitter 510 is connected to the various audio sources in Fig. 1B; it uses CDMA techonology as shown in col. 7; the audio data is superimposed onto a carrier frequency and then tuned into using the deivce via separate selection; this frequency is considered to read upon the unique user code, as it is unique and can allow use by one headphone as desired);

a battery powered audio receiver headphone set opearative to receive the CDMA communication signal and audibily reproduce said ausio dignal representative of said music (headphones 152 and 154), if the unique user code is recognized (i.e. the device is tuned to the specific carrier frequency), to provide a user with prive audio reproduction free of interference form other users of other wireless digital audio music systems in a shared space (col. 7 lines 25 – 33).

Lavelle does not explicitly disclose the audio source coming from an existing analog headphone plug. However, audio sources with headphone plugs are notoriously well known in the art (i.e. iPods etc). Lavelle discloses that other devices may be employed in accordance with the invention; col. 4 lines 35 – 40. It would have been obvious to allow an input for various devices such as iPods and other analog head phone devices. One would have been motivated to do so to make the device

compatible with a widely used portable interface thus allowing user to enjoy their devices within their automobile.

Regarding **Claim 55**, in addition to the elements stated above regarding claim 54 , Lavelle does not explicitly disclose the transmitter having a differential phase shitft keying modulated signal. However, it would have been obvious to one of ordinary skill in the art at the time of the invention to use DPSK in Lavelle. Lavelle discusses that one of ordinary skill in the art will contemplate the various elements required to implement CDMA in an entertainment system according to the invention. When designing a transmitter, one must balance many various factors and depending on the characteristics desired (number of bits transferred, complexity and arrangement of the constellation), one may decide to implement a DPSK method to achieve a certain balance.

Regarding **Claims 57 and 59**, claims 57 and 59 are met by the rejections of claims 54 and 55 as stated above.

Claims 56 and 58 are rejected under 35 U.S.C. 103(a) as being unpatentable over Lavelle (U.S. Patent 6,678,892) in view of Benthin (U.S. Patent 5,790,595)

Regarding **Claims 56 and 58**, in addition to the elements stated above regarding claims 55 and 57:

The combination does not explicitly disclose that the receiver utilizes embedded fuzzy logic to enhance detection of the unique user code in said transmitted DSSS signal. However, it is well known to use a fuzzy logic detection system in a receiver such as Lavelle's. Benthin disloses a receiver that determines soft data bits (Figure i, function of Figure 2) for additional decoding performance in communication with the received, demodulated signal (output of II) from a spread spectrum demodulator (II) (col. 2, lines 6-31 col. 5, lines 10-25).

Applying this to the receiver of the combination meets the limitation of the receiver utilizing embedded fuzzy logic to enhance detection of the unique user code.

To one of ordinary skill in the art at the time the invention was made, it would have been obvious to implement the soft decision relevant components of Benethin as part of the encoding and signal reception parts of the system of the combination. Lavelle discusses that one of ordinary skill in the art will contemplate the various elements required to implement CDMA in an entertainment system according to the invention The motivation behind such a modification would have been that the soft bit determining circuitry would have improved the reliability of the decision relating to the hard data bit equivalents of the received information, as is taught by Benethin.

Conclusion

Applicant's amendment necessitated the new ground(s) of rejection presented in this Office action. Accordingly, **THIS ACTION IS MADE FINAL**. See MPEP § 706.07(a). Applicant is reminded of the extension of time policy as set forth in 37 CFR 1.136(a).

A shortened statutory period for reply to this final action is set to expire THREE MONTHS from the mailing date of this action. In the event a first reply is filed within TWO MONTHS of the mailing date of this final action and the advisory action is not mailed until after the end of the THREE-MONTH shortened statutory period, then the shortened statutory period will expire on the date the advisory action is mailed, and any extension fee pursuant to 37 CFR 1.136(a) will be calculated from the mailing date of the advisory action. In no event, however, will the statutory period for reply expire later than SIX MONTHS from the date of this final action.

Any inquiry concerning this communication or earlier communications from the examiner should be directed to Andrew C. Flanders whose telephone number is (571) 272-7516. The examiner can normally be reached on M-F 8:30 - 5:00.

If attempts to reach the examiner by telephone are unsuccessful, the examiner's supervisor, Sinh Tran can be reached on (571) 272-7546. The fax phone number for the organization where this application or proceeding is assigned is 571-273-8300.

Information regarding the status of an application may be obtained from the Patent Application Information Retrieval (PAIR) system. Status information for published applications may be obtained from either Private PAIR or Public PAIR. Status information for unpublished applications is available through Private PAIR only. For more information about the PAIR system, see http://pair-direct.uspto.gov. Should you have questions on access to the Private PAIR system, contact the Electronic Business Center (EBC) at 866-217-9197 (toll-free). If you would like assistance from a USPTO Customer Service Representative or access to the automated information system, call 800-786-9199 (IN USA OR CANADA) or 571-272-1000.

acf

SINH TRAN
SUPERVISORY PATENT EXAMINER

Notice of References Cited	Application/Control No. 10/648,012	Applicant(s)/Patent Under Reexamination WOOLFORK, C. EARL	
	Examiner Andrew C. Flanders	Art Unit 2615	Page 1 of 1

U.S. PATENT DOCUMENTS

*		Document Number Country Code-Number-Kind Code	Date MM-YYYY	Name	Classification
*	A	US-6,678,892	01-2004	Lavelle et al.	725/75
	B	US-			
	C	US-			
	D	US-			
	E	US-			
	F	US-			
	G	US-			
	H	US-			
	I	US-			
	J	US-			
	K	US-			
	L	US-			
	M	US-			

FOREIGN PATENT DOCUMENTS

*		Document Number Country Code-Number-Kind Code	Date MM-YYYY	Country	Name	Classification
	N					
	O					
	P					
	Q					
	R					
	S					
	T					

NON-PATENT DOCUMENTS

*		Include as applicable: Author, Title Date, Publisher, Edition or Volume, Pertinent Pages)
	U	
	V	
	W	
	X	

*A copy of this reference is not being furnished with this Office action. (See MPEP § 707.05(a).)
Dates in MM-YYYY format are publication dates. Classifications may be US or foreign.

Index of Claims

Application/Control No.	Applicant(s)/Patent under Reexamination
10/648,012	WOOLFORK, C. EARL
Examiner: Andrew Flanders	Art Unit: 2644

√	Rejected	–	(Through numeral) Cancelled	N	Non-Elected	A	Appeal
=	Allowed	+	Restricted	I	Interference	O	Objected

Claim		Date									
Final	Original	5/10/05	12/22/05	5/13/06	9/28/06	12/27/06	7/14/07				
	1	√	√	√	√	√					
	2	√		√	√	√					
	3	√	√	√	√	√					
	4	√	√	√	√	√					
	5		√	√	√	√					
	6			√	√	√					
	7			√	√	√					
	8			√	√	√					
	9			√	√	√					
	10			√	√	√					
	11			√	√	√					
	12			√	√	√					
	13			√	√	√					
	14			√	√	√					
	15			√	√	√					
	16			√	√	√					
	17			√	√	√					
	18			√	√	√					
	19			√	√	√					
	20			√	√	√					
	21			√	√	√					
	22			√	√	√					
	23			√	√	√					
	24			√	√	√					
	25			√	√	√					
	26			√	√	√					
	27			√	√	√					
	28			√	√	√					
	29			√	√	√					
	30			√	√	√					
	31			√	√	√					
	32			√	√	√					
	33			√	√	√					
	34			√	√	√					
	35			√	√	√					
	36			√	√	√					
	37			√	√	√					
	38			√	√	√					
	39			√	√	√					
	40			√	√	√					
	41			√	√	√					
	42			√	√	√					
	43			√	√	√					
	44			√	√	√					
	45			√	√	√					
	46			√	√	√					
	47			√	√	√					
	48			√	√	√					
	49			√	√	√					
	50			√	√	√					

Claim		Date									
Final	Original				9/28/06	12/27/06	7/14/07				
	51				√	√	√				
	52				√	√	√				
	53				√	√	√				
	54				√	√	√				
	55						√				
	56						√				
	57						√				
	58						√				
	59						√				
	60										
	61										
	62										
	63										
	64										
	65										
	66										
	67										
	68										
	69										
	70										
	71										
	72										
	73										
	74										
	75										
	76										
	77										
	78										
	79										
	80										
	81										
	82										
	83										
	84										
	85										
	86										
	87										
	88										
	89										
	90										
	91										
	92										
	93										
	94										
	95										
	96										
	97										
	98										
	99										
	100										

Claim		Date									
Final	Original										
	101										
	102										
	103										
	104										
	105										
	106										
	107										
	108										
	109										
	110										
	111										
	112										
	113										
	114										
	115										
	116										
	117										
	118										
	119										
	120										
	121										
	122										
	123										
	124										
	125										
	126										
	127										
	128										
	129										
	130										
	131										
	132										
	133										
	134										
	135										
	136										
	137										
	138										
	139										
	140										
	141										
	142										
	143										
	144										
	145										
	146										
	147										
	148										
	149										
	150										

Search Notes

Application/Control No.	Applicant(s)/Patent under Reexamination
10/648,012	WOOLFORK, C. EARL
Examiner	**Art Unit**
Andrew ~~Cochran~~ Flanders	2644

SEARCHED

Class	Subclass	Date	Examiner
700	94	5/10/2005	~~AG~~ ACF
714	709,780	5/10/2005	~~AG~~
706	8,9	5/10/2005	~~AG~~
455	3.06,41	5/10/2005	~~AG~~
455	66.1	5/10/2005	~~AG~~
375	224	5/10/2005	~~AG~~
381	79	12/15/2005	~~AG~~
455	41.3	12/15/2005	~~AG~~
	updated	9/25/06	ACF
455	564.1,412	9/25/06	ACF
455	413	9/25/06	ACF
375	295-297	9/25/06	ACF
375	346,348	9/25/06	ACF
375	219	9/25/06	ACF

INTERFERENCE SEARCHED

Class	Subclass	Date	Examiner

SEARCH NOTES (INCLUDING SEARCH STRATEGY)

	DATE	EXMR
EAST search using USPAT PGPUB DERWENT EPO JPO USOCR dbs	5/10/2005	AG
cls/sbcls at left w/ keywords Bluetooth, fuzzy, soft decision, bit energy, probability, membership, and equivalents	5/10/2005	AG
Parent application, including applied references, considered	5/10/2005	AG
Inventor search, using EAST and Internet search engine	5/10/2005	AG
381/2,455/41.2,41.3(t.o.w/low pass) 381/270(t.o.w/ headphone) various text search - see search history printout	12/15/2005	dr
Reviewed + updated Part of EAST list	5/12/06 9/25/06	ACF ACF
Tse Yeung Bill Frost Leave list	9/22/06 9/25/06	ACF ACF
Quochien Vuong	9/22/06	ACF

SONY EXHIBIT 1005 – 0783

Search Notes

Application/Control No.	Applicant(s)/Patent under Reexamination
10/648,012	WOOLFORK, C. EARL
Examiner	**Art Unit**
Andrew C. Flanders	2615

SEARCHED			
Class	Subclass	Date	Examiner
375	341, 140 147	3/20/07	ACF
375	295, 146	3/20/07	ACF
375	130, 340	3/20/07	ACF
375	316, 148	3/20/07	ACF
375	242, 245	3/24/07	ACF
375	341	3/24/07	ACF
714	794, 795	3/24	ACF

INTERFERENCE SEARCHED			
Class	Subclass	Date	Examiner

SEARCH NOTES (INCLUDING SEARCH STRATEGY)		
	DATE	EXMR
See Hotkey Attached		
Lewis West 375/140, 146, 147	3/20/07	ACF
Kevin Burd Class 375	3/21/07	ACF
Tsc Young 375/147, 262, 295 340, 341	3/27/07	ACF
714/794, 795		
375, class and "fuzzy Logic"	3/20/07	ACF
updated	7/11/07	ACF

IN THE UNITED STATES PATENT AND TRADEMARK OFFICE

Application No.:	10/648,012
Applicant:	WOOLFORK, C. Earl
Filing Date:	08/26/2003
Title:	WIRELESS DIGITAL AUDIO MUSIC SYSTEM
TC/A.U.:	2615
Confirmation No.	3337
Examiner:	FLANDERS, Andrew C.
Docket No.	W003-4000

Mail Stop AF
Commissioner for Patents
Post Office Box 1450
Alexandria, Virginia 22313-1450

RESPONSE TO FINAL OFFICE ACTION

Dear Sir:

In response to the Final Office Action (FOA) of July 23, 2007, Applicant requests reconsideration of the patent application as follows:

Claims are reflected in the listing of claims, which begins on page 2 of this paper.

Remarks/Arguments begin on page 16 of this paper.

SONY EXHIBIT 1005 – 0785

AMENDMENT TO CLAIMS:

This listing of claims will replace all prior versions, and listings, of claims in the application.

Listing of Claims:

Claims 1 - 18 (canceled).

19. (Previously Presented) A wireless digital audio system, comprising:

at least one audio source to produce an audio output representative of music;

at least one digital audio transmitter operatively coupled to said at least one audio source, said at least one audio transmitter comprising:

a first analog low pass filter receiving the audio output from said at least one audio source;

a digital low pass filter;

an analog-to-digital converter (ADC) operatively coupled between said first analog and digital low pass filters;

a first encoder receiving output from said digital low pass filter and being configured to reduce intersymbol interference (ISI);

a second channel encoder operatively coupled to said first encoder and adapted to reduce transmission errors;

a digital modulator operatively coupled to said second channel encoder; and

a differential phase shift key (DPSK) module receiving output from said digital modulator and a unique user code bit sequence and being configured for direct sequence spread spectrum (DSSS) communication, said DPSK module transmitting a corresponding DSSS signal having said audio output representative of the music and the unique user code bit sequence;

at least one audio receiver configured for digital wireless communication with said at least one audio transmitter, said at least one audio receiver comprising:

SONY EXHIBIT 1005 – 0786

a band pass filter (BPF) configured to process said transmitted DSSS signal;

a direct conversion module receiving output from said BPF and being configured to capture the unique user code bit sequence embedded in said processed DSSS signal;

a digital demodulator adapted to process an output from said direct conversion module;

a Viterbi decoder operatively coupled to said digital demodulator and generating a corresponding digital output;

a source decoder processing said digital output from said Viterbi decoder and being configured to decode the digital signal encoded by said first encoder;

a second analog low pass filter; and

a digital-to-analog converter (DAC) operatively coupled between said source decoder and said second analog low pass filter, said second analog low pass filter generating the audio output representative of the music; and

at least one module adapted to reproduce said audio output representative of said music, if the unique user code bit sequence is recognized, said audio output having been wirelessly transmitted from said at least one audio source to a user for private audio reproduction of said music without interference from other users or wireless devices.

20. (Previously Presented) The wireless digital audio system of Claim 19, wherein said BPF is a wideband BPF.

21. (Previously Presented) The wireless digital audio system of Claim 19, wherein said modulator is a 64-Ary modulator.

22. (Previously Presented) The wireless digital audio system of Claim 19,

SONY EXHIBIT 1005 – 0787

wherein said demodulator is a 64-Ary demodulator.

23. (Previously Presented) The wireless digital audio system of Claim 19, wherein said generated audio output is in the approximate range of 20 Hz to 20 kHz.

24. (Previously Presented) The wireless digital audio system of Claim 19, wherein said spread spectrum signal is transmitted at about 2.4 GHz via an omni-directional antenna.

25. (Previously Presented) The wireless digital audio system of Claim 24, wherein said spread spectrum signal is transmitted at a power of about 100 milliwatts or less.

26. (Previously Presented) The wireless digital audio system of Claim 19, wherein said ADC is a 4-bit analog-to-digital converter.

27. (Previously Presented) The wireless digital audio system of Claim 19, wherein said at least one audio source is a portable audio player.

28. (Previously Presented) The wireless digital audio system of Claim 19, wherein said at least one audio reproducing module includes at least one headphone speaker.

29. (Previously Presented)The wireless digital audio system of Claim 19, wherein said BPF is operatively coupled to at least one antenna configured to receive said transmitted DSSS signal.

30. (Previously Presented) A wireless digital audio system, comprising:

SONY EXHIBIT 1005 – 0788

at least one audio source;

at least one digital audio transmitter operatively coupled to said at least one audio source, said at least one audio transmitter comprising:

a first analog low pass filter receiving audio output from said at least one audio source;

a digital low pass filter;

an analog-to-digital converter (ADC) operatively coupled between said first analog and digital low pass filters;

a first encoder receiving output from said digital low pass filter and being configured to reduce intersymbol interference (ISI);

a second channel encoder operatively coupled to said first encoder and adapted to reduce transmission errors;

a digital modulator operatively coupled to said second channel encoder; and

a differential phase shift key (DPSK) module receiving output from said digital modulator and a unique user code and being configured for direct sequence spread spectrum (DSSS) communication, said DPSK module transmitting a corresponding DSSS signal;

at least one audio receiver configured for digital wireless communication with said at least one audio transmitter and utilizing embedded fuzzy logic to enhance detection of the unique user code in said transmitted DSSS signal, said at least one audio receiver comprising:

a band pass filter (BPF) configured to process said transmitted DSSS signal;

a direct conversion module receiving output from said BPF and being configured to capture the correct bit sequence embedded in said processed DSSS signal;

a digital demodulator adapted to process output from said direct conversion module;

SONY EXHIBIT 1005 – 0789

a Viterbi decoder operatively coupled to said digital demodulator and generating a corresponding digital output;

a source decoder processing said digital output from said Viterbi decoder and being configured to decode the digital signal encoded by said first encoder;

a second analog low pass filter; and

a digital-to-analog converter (DAC) operatively coupled between said source decoder and said second analog low pass filter, said second analog low pass filter generating the audio output;

at least one module adapted to amplify said generated audio output; and

at least one module adapted to reproduce said amplified audio output, if the unique user code is recognized, said audio output having been wirelessly transmitted from said at least one audio source to a user privately without interference from other users or wireless devices.

31. (Previously Presented) The wireless digital audio system of Claim 30, wherein said at least one audio amplifying module includes at least one power amplifier, said at least one power amplifier being configured to provide a low distortion audio signal output.

32. (Previously Presented) The wireless digital audio system of Claim 31, wherein said at least one audio reproducing module includes at least one headphone speaker, said at least one headphone speaker receiving said low distortion audio signal output from said at least one power amplifier.

33. (Previously Presented) A wireless digital audio system, comprising:

at least one audio source;

at least one digital audio transmitter operatively coupled to said at least one audio source;

SONY EXHIBIT 1005 – 0790

at least one audio receiver adapted for digital wireless communication with said at least one audio transmitter, each of said at least one digital audio transmitter and receiver being configured for code division multiple access (CDMA) communication; and

at least one module adapted to audibly reproduce said processed CDMA signal, said CDMA communication configuration providing a user with independent audio reproduction free of interference from other users or wireless devices.

34. (Previously Presented) A wireless digital audio system, comprising:

at least one audio source;

at least one digital audio transmitter operatively coupled to said at least one audio source;

at least one audio receiver adapted for digital wireless communication with said at least one audio transmitter, each of said at least one digital audio transmitter and receiver being configured for code division multiple access (CDMA) communication;

at least one module adapted to amplify said processed CDMA signal; and

at least one module adapted to audibly reproduce said amplified signal, said CDMA communication configuration providing a user with independent audio reproduction free of interference from other users or wireless devices.

Claims 35 - 36 (canceled).

37. (Previously Presented) The wireless digital audio system of Claim 33, wherein said at least one audio source provides analog output in the approximate range of 20 Hz to 20 kHz.

38. (Previously Presented) The wireless digital audio system of Claim 34, wherein said at least one audio source provides analog output in the approximate range of 20 Hz to 20 kHz.

SONY EXHIBIT 1005 – 0791

Claims 39 - 40 (canceled).

41. (Previously Presented) The wireless digital audio system of Claim 33, wherein at least one of said digital audio transmitter and receiver is battery-powered.

42. (Previously Presented) The wireless digital audio system of Claim 34, wherein at least one of said digital audio transmitter and receiver is battery-powered.

43. (Previously Presented) A wireless digital audio system, comprising:

at least one audio source;

at least one digital audio transmitter operatively coupled to said at least one audio source, said at least one audio transmitter comprising:

a first analog low pass filter receiving audio output representative of music from said at least one audio source;

a digital low pass filter;

an analog-to-digital converter (ADC) operatively coupled between said first analog and digital low pass filters;

a first encoder receiving output from said digital low pass filter and being configured to reduce intersymbol interference (ISI);

a second channel encoder operatively coupled to said first encoder and adapted to reduce transmission errors;

a digital modulator operatively coupled to said second channel encoder; and

a differential phase shift key (DPSK) module receiving output from said digital modulator and a unique user code bit sequence and being configured for direct sequence spread spectrum (DSSS) communication, said DPSK module transmitting a corresponding DSSS signal;

SONY EXHIBIT 1005 – 0792

at least one audio receiver configured for digital wireless communication with said at least one audio transmitter, said at least one audio receiver comprising:

a band pass filter (BPF) configured to process said transmitted DSSS signal;

a direct conversion module receiving output from said BPF and being configured to capture the the unique user code bit sequence embedded in said processed DSSS signal;

a digital demodulator adapted to process output from said direct conversion module;

a Viterbi decoder operatively coupled to said digital demodulator and generating a corresponding digital output;

a source decoder processing said digital output from said Viterbi decoder and being configured to decode the digital signal encoded by said first encoder;

a second analog low pass filter; and

a digital-to-analog converter (DAC) operatively coupled between said source decoder and said second analog low pass filter, said second analog low pass filter generating the audio output representative of said music; and

at least one module adapted to reproduce said audio output, if the unique user code bit sequence is recognized, said audio output representative of said music having been wirelessly transmitted from said at least one audio source to a user privately without interference from other users or wireless devices.

44. (Previously Presented) A wireless digital audio system, comprising:

at least one audio source;

at least one digital audio transmitter operatively coupled to said at least one audio source, said at least one audio transmitter comprising:

a first analog low pass filter receiving audio output representative of music from said at least one audio source;

SONY EXHIBIT 1005 – 0793

a digital low pass filter;

an analog-to-digital converter (ADC) operatively coupled between said first analog and digital low pass filters;

a first encoder receiving output from said digital low pass filter and being configured to reduce intersymbol interference (ISI);

a second channel encoder operatively coupled to said first encoder and adapted to reduce transmission errors;

a digital modulator operatively coupled to said second channel encoder; and

a differential phase shift key (DPSK) module receiving output from said digital modulator and a unique user code and being configured for direct sequence spread spectrum (DSSS) communication, said DPSK module transmitting a corresponding DSSS signal;

at least one audio receiver configured for digital wireless communication with said at least one audio transmitter, said at least one audio receiver comprising:

a band pass filter (BPF) configured to process said transmitted DSSS signal;

a direct conversion module receiving output from said BPF and being configured to capture the unique user code embedded in said processed DSSS signal;

a digital demodulator adapted to process output from said direct conversion module;

a Viterbi decoder operatively coupled to said digital demodulator and generating a corresponding digital output;

a source decoder processing said digital output from said Viterbi decoder and being configured to decode the digital signal encoded by said first encoder;

a second analog low pass filter; and

a digital-to-analog converter (DAC) operatively coupled between said source decoder and said second analog low pass filter, said second analog low

SONY EXHIBIT 1005 – 0794

pass filter generating the audio output representative of the music;

at least one module adapted to amplify said generated audio output; and

at least one module adapted to reproduce said amplified audio output, if the unique user code is recognized, said audio output having been wirelessly transmitted from said at least one audio source to a user privately.

45. (Previously Presented) The wireless digital audio system of Claim 43, wherein said at least one audio source provides analog output in the approximate range of 20 Hz to 20 kHz.

46. (Previously Presented) The wireless digital audio system of Claim 44, wherein said at least one audio source provides analog output in the approximate range of 20 Hz to 20 kHz.

47. (Previously Presented) The wireless digital audio system of Claim 43, wherein at least one of said digital audio transmitter and receiver is battery-powered.

48. (Previously Presented) The wireless digital audio system of Claim 44, wherein at least one of said digital audio transmitter and receiver is battery-powered.

49. (Previously Presented) The wireless digital audio system of Claim 43, wherein said at least one audio source is a portable music player.

50. (Previously Presented) The wireless digital audio system of Claim 44, wherein said at least one audio source is a portable music player.

51. (Previously Presented) A wireless digital audio transmitter, comprising:

a first analog low pass filter receiving audio output representative of

SONY EXHIBIT 1005 – 0795

music from at least one audio source;

a digital low pass filter;

an analog-to-digital converter (ADC) operatively coupled between said first analog and digital low pass filters;

a first encoder receiving output from said digital low pass filter and being configured to reduce intersymbol interference (ISI);

a second channel encoder operatively coupled to said first encoder and adapted to reduce transmission errors;

a digital modulator operatively coupled to said second channel encoder;

a code generator to add a unique user code to a modulator output, the modulator output including the audio output representative of said music; and

a differential phase shift key (DPSK) module receiving the modulator output from said digital modulator and the unique user code and being configured for direct sequence spread spectrum (DSSS) communication, said DPSK module transmitting a corresponding DSSS signal.

52. (Previously Presented) A wireless digital audio receiver, comprising:

a band pass filter (BPF) configured to process a transmitted DSSS signal;

a direct conversion module receiving output from said BPF and being configured to capture a unique user code bit sequence embedded in said processed DSSS signal;

a digital demodulator adapted to process output from said direct conversion module;

a Viterbi decoder operatively coupled to said digital demodulator and generating a corresponding digital output;

a source decoder receiving said digital output from said Viterbi decoder and being configured to decode the digital signal encoded therein;

a second analog low pass filter; and

SONY EXHIBIT 1005 – 0796

a digital-to-analog converter (DAC) operatively coupled between said source decoder and said second analog low pass filter, said second analog low pass filter generating an audio output representative of music, if the unique user code bit sequence is recognized, corresponding to the decoded and converted digital signal, said audio output having been wirelessly transmitted to a user for private listening of high fidelity audio music without interference from other users or wireless devices.

53. (Previously Presented) A wireless digital audio receiver, comprising:

a band pass filter (BPF) configured to process a transmitted DSSS signal;

a direct conversion module receiving output from said BPF and being configured to capture a unique user code bit sequence embedded in said processed DSSS signal;

a fuzzy logic detector to enhance detection of the unique user code bit sequence;

a digital demodulator adapted to process output from said direct conversion module;

a Viterbi decoder operatively coupled to said digital demodulator and generating a corresponding digital output;

a source decoder receiving said digital output from said Viterbi decoder and being configured to decode the digital signal encoded therein;

a second analog low pass filter; and

a digital-to-analog converter (DAC) operatively coupled between said source decoder and said second analog low pass filter, said second analog low pass filter generating an audio output, if the unique user code bit sequence is recognized, corresponding to the decoded and converted digital signal, said audio output having been wirelessly transmitted to a user privately without interference from other users or wireless devices.

SONY EXHIBIT 1005 – 0797

54. (Previously Presented) A wireless digital audio system, comprising:

an audio source to provide an audio signal representative of music having an existing analog headphone plug;

a battery-powered transmitter coupled to said at least one audio source via said analog headphone plug and operative to transmit a code division multiple access (CDMA) communication signal having said audio signal representative of said music and an added unique user code;

a battery-powered audio receiver headphone set operative to receive the CDMA communication signal and audibly reproduce said audio signal representative of said music, if the unique user code is recognized, to provide a particular user with private audio reproduction free of interference from other users of other wireless digital audio music systems in a shared space.

55. (Previously Presented) A wireless digital audio system, comprising:

an audio source to provide an audio signal representative of music having an existing analog headphone plug;

a battery-powered transmitter coupled to said at least one audio source via said analog headphone plug and operative to transmit a code division multiple access (CDMA) communication signal having a differential phase shift keying (DPSK) modulated signal of said audio signal representative of said music and an added unique user code;

an audio receiver headphone set operative to receive the CDMA communication signal and audibly reproduce said audio signal, if the unique user code is recognized, to provide a user with private audio reproduction of said music free of interference from other users of other wireless digital audio music systems in a shared space.

56.(New) The system of claim 55, said audio receiver headphone further comprising a fuzzy logic detector to enhance detection of the unique user code.

SONY EXHIBIT 1005 – 0798

57. (Previously Presented) A wireless digital audio headset receiver, comprising:

a direct conversion module configured to receive a wirelessly transmitted code division multiple access (CDMA) signal having an audio signal representative of audio music and a unique user code; and

headset speakers for privately reproducing said audio music to a user, if the unique user code is recognized, and free of interference from other users of other wireless digital audio music systems in a shared space.

58.(Previously Presented) The receiver of claim 57, further comprising a fuzzy logic detector to enhance detection of the unique user code.

59. (Previously Presented) A code division multiple access (CDMA) battery-powered transmitter comprising:

a jack to connect to an existing analog headphone plug of an audio source;

means for receiving an audio output representative of music from the audio music source;

means for generating a unique user code; and

means for wirelessly transmitting a CDMA communication signal having said audio output representative of said music and said unique user code to a wireless headphone receiver.

SONY EXHIBIT 1005 – 0799

REMARKS/ARGUMENTS

Applicant has reviewed the Office Action (OA) of July 23, 2007 and request reconsideration of the application for the reasons described below.

Status of Claims

Claims 19-34, 37, 38, 41-59 are pending in this application.

Claim Rejections Under 35 U.S.C. §112

The rejection of Claims 30, 53, 56 and 58 under 35 U.S.C. §112, first paragraph, as failing to comply with the enablement requirement, is respectfully traversed.

The final office action ("FOA") states that:

> *Claim 30 recites that the receiver uses embedded fuzzy logic to enhance detection of the unique user code in said transmitted DSSS signal. However, Applicant's FIG. 1, shows a fuzzy logic detector (61) inside of the receiver unit (50). Receiver unit 50 is fully disclosed in FIG. 3, however, neither the specification, nor the drawings provide any detail as to how any fuzzy logic is used within the components of FIG. 3 to enhance detection of the unique user code. (Emphasis added)*

First, there are multiple paragraphs directed to fuzzy logic detection embedded in receiver 50. The Applicant directs the Examiner's attention to the entire specification but specifically to paragraphs [0010], [0013] and [0014] for detailed support of the fuzzy logic detection. Fuzzy logic is software that employs a set of rules. For example, in paragraph [0013], the specification states "fuzzy logic detection sub-system 61 may use a set of if-then rules." In paragraph [0014], the specification states "fuzzy logic detection sub-system 61 in ... receiver 50 utilizes the if-then fuzzy set to map the received user code bits ..." Paragraph [0014] provides explicit details related to the "rules" and the evaluation of such "rules." More importantly, FIG. 4 is provided to graphically illustrate features of the fuzzy logic detection and the basis of

SONY EXHIBIT 1005 – 0800

the evaluation of the rules. In fact, FIG. 4 is described as "graph showing utilization of an embedded fuzzy logic coding algorithm."

The fuzzy logic detection sub-system 61 is shown in FIG. 1 and described as being associated with receiver 50. As acknowledged in the FOA, the rejection states "receiver unit 50 is fully disclosed in FIG. 3." Hence, in view of the disclosure and drawings, Applicant has described the fuzzy logic detection sub-system 61 and how it is used to enhance detection of the unique user code.

Based on the above, Applicant respectfully requests that the rejection of Claims 30, 53, 56 and 58 under 35 U.S.C. §112, first paragraph, as failing to comply with the written description requirement, be withdrawn.

SONY EXHIBIT 1005 – 0801

Claim Rejections Under 35 U.S.C. §102(e)
Lindemann et al. (U.S. Patent Application 2004/0223622)

The rejection of Claims 33, 34 and 37-38 under 35 U.S.C. §102(e) as being anticipated by Lindemann (U.S. Patent Application 2004/0223622) is respectfully traversed.

Claim 33 recites

> *...at least one module adapted to audibly reproduce said processed CDMA signal, said CDMA communication configuration providing* ***a user with independent audio reproduction free of interference*** *from other users or wireless devices.* (Emphasis added)

The above emphasized claim language is not taught or suggested by Lindemann. Lindemann does not address reproduction that is interference free. Furthermore, Applicant observes that Lindemann does not mention interference or address the problem identified by Applicant and thus Applicant's solution to provide *a user with independent audio reproduction free of interference from other users or wireless devices*. Instead, Lindemann is directed to digital wireless loudspeaker system and the delivery of signals to the speakers. Thus, Lindemann is not directed to a system capable of (1) providing a user with *independent audio reproduction;* and (2) *reproduction free of interference from other users or wireless devices*. By contrast, Lindemann simply provides a "loudspeaker system" where anyone can listen.

The Examiner states on page 2 of the FOA that the ". . . speakers reproduce audio independently without interference from other speakers. This is more clearly shown in paragraph 66 of Lindemann which states that certain groups of speakers can be selected and independently operated using Status messages embedded in the audio packet headers and Status decode logic." Applicant has provided the text from Lindemann beginning from the paragraph 0064 through paragraph 0066 below which states:

SONY EXHIBIT 1005 – 0802

[0064] The output of the Channel Selection Interface 1000 determines which audio channel the individual loudspeaker is assigned to in a surround sound or stereo system, which mix mode to use (described later), and digital crossover filter EQ information (also described later). FIG. 18 shows one embodiment of the Channel Selection Interface. A Channel Selection Switch 1801 located on the speaker cabinet allows the user to specify what role an individual speaker is assigned to in a surround sound system: left front, center front, right front, left read, right rear. In the case of subwoofer the speaker itself is sufficiently distinctive that know switch is necessary. The output of the Channel Selection Switch is input to the Channel Selection Register and Status Decode Logic 1802. The output of the Channel Selection Register and Status Decode Logic 1802 is the output of the Channel Selection Interface 1000 and is sent to the remaining functional units of the Digital to Speaker Input Conversion and Channel Selector. A special NO_CHANNEL output code from the Channel Selection Interface specifies that the speaker is disabled and should respond to no channel selection. Also comprised in the Channel Selection Interface is a Group Selection Switch 1800. Many homes and offices have multiple groups of loudspeakers--e.g. a group of loudspeakers in the living room and another group in the kitchen. The Group Selection Switch allows a loudspeaker to be assigned to one of many groups of loudspeakers. (Emphasis added)

[0065] Status information from the Framing and Error Protection Decoder and Sample Clock Generator 106,116,126 of FIG. 1) is also received by the Channel Selection Interface 1000 and input to the Channel Selection Register and Status Decode Logic 1802. Among other messages, the status information contains commands to enable or disable a particular group of speakers. When the group to which the current loudspeaker is assigned is disabled, the Channel Selection Register and Status Decoder Logic 1802 is set to output the special NO_CHANNEL output code.

[0066] Another status message determines enabling of different speaker modes according to speaker group. For example, "enable only left and right front channels for stereo speaker Group A". Another useful status message is "enable left and right front channels of speaker Group B to mix down the received six channel surround data to two channel stereo". This would be appropriate if there were only two stereo speakers in speaker Group B. This mix information appears at the output of the Channel Selection Register and Status Decode Logic 1802, and is input

SONY EXHIBIT 1005 – 0803

> *to the Channel Selector and Mixer and Volume Control (1003 of FIG. 10). At the same time another status message can be sent saying "enable full six channel decode on Group B". This would be appropriate if Speaker Group A consists of a full complement of six surround sound speakers. Again the mix information is used in this case. (Emphasis added)*

First, Applicant observes that the term "independent" or "independently" cannot be found anywhere in Lindemann.

Second, Applicant fails to see how the Examiner's characterization of paragraph 66 in Lindemann teaches (1) providing *a user* with *independent audio reproduction* (i.e., an individual using the transmitter and receiver headphone of the wireless digital audio music system); and (2) *reproduction free of interference from other users* (i.e., multiple individuals, each using their own transmitter and receiver headphone of the wireless digital audio music system) *or wireless devices*. Instead, according to Lindemann the loudspeaker system includes "multiple groups of loudspeakers--e.g. a group of loudspeakers in the living room and another group in the kitchen. The Group Selection Switch allows a loudspeaker to be assigned to one of many groups of loudspeakers." Applicant fails to see the nexus of the Examiner's characterization of paragraph 66 with the explicit claim language in claim 33.

More specifically, Lindemann is directed to a "Digital wireless loudspeaker system" (Abstract). Applicant acknowledges that the speakers of Lindemann produces an audio output and may be selectively enabled and disabled. However, the speakers are not "*independent*" or "*independently*" operated. Instead, the speakers are part of Lindeman's system.

Even assuming that the operation of the speakers in Lindemann is independent, there is no teaching that such independent operation of speakers provides "a user with *independent* audio reproduction free of interference."

Returning again to the FOA, the rejection again relies on FIG. 15A for a teaching that the "the speakers reproduce, which receive the audio without interference

SONY EXHIBIT 1005 – 0804

from the other speakers." (See page 5 of the FOA.) A quick search of the patent application publication reveals that there is no mention of the term "interference" in Lindemann. It is well known by those skilled in the art that radio frequency (RF) interference originates from a source (i.e., transmitter) external to a RF signal path and produces undesired artifacts in the RF signal. Lindemann does not address speaker receiver interference due to many same transmitters sharing the same space [Lindemann 20040223622 paragraph 0011 "...signal generated by the single RF transmitter in the audio transmission device;" and paragraph 0058 "...Signal generated by the single RF Transmitter."]. Based on the foregoing, Applicant respectfully submits that FIG. 15A does not provide any evidence that the speakers "receive the audio without interference."

Claim 34 contains similar language. Thus, the remarks set forth above in relation to Claim 33 equally apply to Claim 34.

Accordingly, Lindemann cannot anticipate Applicant's Claims 33 and 34. For at least this reason, Applicant respectfully requests withdrawal of the rejection of Claims 33 and 34 by Lindemann under 35 U.S.C. §102(e).

Dependent Claims 37 and 41 depend directly or indirectly from independent Claim 33. Furthermore, dependent Claims 38 and 42 depend from independent Claim 34. These dependent claims contain all of the limitations of independent Claims 33 or 34, thus, any rejections under 35 U.S.C. §§102 or 103 should be withdrawn by virtue of their dependency from independent Claims 33 or 34.

Additionally, Applicant believes that the dependent claims 37, 38, 41 and 42 recite other features that are clearly lacking from the applied reference(s), and do not acquiesce to any of the rejections.

SONY EXHIBIT 1005 – 0805

Claim Rejections Under 35 U.S.C. §103
Lindemann et al. (U.S. Patent Application 2004/0223622)
in view of Sato (U.S. Patent 4,970,637)

The rejection of claims 19-29 and 43-52 under 35 U.S.C. §103(a) as being unpatentable by Lindemann et al. (U.S. Patent Application 2004/0223622) in view of Sato (U.S. Patent 4,970,637) is respectfully traversed.

Applicant would like to mention that in addition to Lindemann and Sato, the rejection of Claim 19 also relies upon Roberts, et al. (U.S. Patent 6,418,558), and Schotz (U.S. Patent 5,946,343). Furthermore, the rejection of Claim 19 relies on numerous statements that various claimed elements in Claim 19 are notorious.

In regards to Claim 19, in addition to the remarks set forth above in relation to claims 33 and 34, neither Lindemann nor Sato teach "*for private audio reproduction of said music*" or "*reproduce said audio output representative of said music, if the unique user code bit sequence is recognized.*" Hence any combination of Lindemann and Sato would not produce applicant's invention. There is nothing in Lindemann, the primary reference, to provide a user with private audio reproduction, such as via headphones, and without interference from other users or wireless devices. By contrast, Lindemann simply provides a "loudspeaker system" where anyone can listen; Lindemann does not address interference anywhere. The word "private" does not appear anywhere in Lindemann or Sato. Furthermore, "private" does not appear in Schotz '343 or Roberts '558.

In Lindemann, the system does not transmit "music" with a "unique user code bit sequence." At best, Lindemann sends different channels (for stereo or surround sound) to different speakers and does not require "a unique user code bit sequence."

Furthermore, the wireless digital audio music system of the Applicant utilizes Code Division Multiple Access (CDMA) to allow multiple wireless digital audio music system users to simultaneously share a finite amount of radio frequency spectrum. Lindemann utilizes CDMA to multiplex the audio spectrum [Lindemann 20040223622

SONY EXHIBIT 1005 – 0806

paragraph 0075 "This corresponds to a Code Division Multiple Access (CDMA) method of multiplexing the multiple audio channels."]. Moreover, Schotz does not mention CDMA anywhere. Therefore, any combination of Lindemann, Sato, Schotz or Roberts would not produce the applicant's invention.

On page 8 of the FOA, the Examiner appears to be equating "unique user code bit sequence," as claimed by Applicant, to "status messages ... in the transmission frames to control speaker attributes such as speaker group." The FOA also directs Applicant to paragraphs 0011 and 0064. However, Lindemann provides channel selection for various combinations of speakers or groups of speakers such as to provide, in one embodiment, a "full complement of six surround sound speakers." Lindemann is essentially silent with regard to the use of or the need for a "unique user code bit sequence."

In view of the foregoing remarks, the rejection of Claim 19 under 35 U.S.C. §103(a) as being unpatentable by Lindemann in view of Sato (Schotz and/or Roberts), as well as, the numerous assertions by the Examiner that claimed elements are notorious, is respectfully traversed. Thus, the rejection of Claim 19 under 35 U.S.C. §103(a) should be withdrawn.

Dependent Claims 20-29 depend directly or indirectly from independent Claim 19. These dependent claims contain all of the limitations of independent Claim 19, thus, any rejections under 35 U.S.C. §103 should be withdrawn by virtue of their dependency from independent Claim 19.

Additionally, the Applicant believes that many of the dependent claims 20-29 recite other features that are clearly lacking from the applied references, and do not acquiesce to any of the rejections.

As to claim 28, Lindemann is directed to a "digital wireless loudspeaker system" with surround sound capability. Thus, modifying Lindemann to incorporate the teachings of Lindemann as modified by Sato (Schotz and/or Roberts) into a headphone set is using applicant's own disclosure. Furthermore, such a modification

SONY EXHIBIT 1005 – 0807

destroys the intended operation of Lindemann, the primary reference, to disperse multiple speakers with speaker groups in different rooms as well as provide a "full complement of six surround sound speakers."

Claims 43 and 44 contain similar language as Claim 19. Thus, the remarks set forth above in relation to Claim 19 equally apply.

In view of the foregoing remarks related to Claim 19, the rejection of Claims 43 and 44 under 35 U.S.C. §103(a) as being unpatentable by Lindemann in view of Sato (Schotz and/or Roberts), as well as, the numerous assertions by the Examiner that claimed elements are notorious, is respectfully traversed. Thus, the rejection of Claims 43 and 44 under 35 U.S.C. §103(a) should be withdrawn.

Dependent Claims 45, 47, and 49 depend directly or indirectly from independent Claim 43. Dependent Claims 46, 48, and 50 depend directly or indirectly from independent Claim 44. These dependent claims contain all of the limitations of their corresponding independent Claim 43 or 44, thus, any rejections under 35 U.S.C. §103 should be withdrawn by virtue of their dependency therefrom.

Applicant further believes that many of the dependent Claims 45-50 recite other features that are clearly lacking from the applied references, and do not acquiesce to any of the rejections.

Claim 51 positively recites "*a code generator to add a unique user code to a modulator output, the modulator output including the audio output representative of said music.*". As remarked previously, Lindemann, the primary reference, does not require a "*unique user code*" or add "*the unique user code to a modulator output ... including the audio output representative of said music.*" Hence, Lindemann does not have a "*code generator to add a unique user code.*"

Moreover, neither Lindemann, nor Sato, adds "*the unique user code to a modulator output ... including the audio output representative of said music.*" Hence any combination of these references still would not produce applicant's claimed invention.

SONY EXHIBIT 1005 – 0808

In view of the foregoing amendments and remarks, the rejection of Claim 51 under 35 U.S.C. §103(a) as being unpatentable by Lindemann in view of Sato (Schotz and/or Roberts), as well as, the numerous assertions by the Examiner that claimed elements are notorious, is respectfully traversed. Thus, the rejection of Claim 51 under 35 U.S.C. §103(a) should be withdrawn.

Claim 52 includes a positive recitation of a "*unique user code bit sequence*" and "*for private listening of high fidelity audio music.*" The remarks set forth above in relation to Claim 19 equally apply to Claim 52.

In view of the foregoing remarks, the rejection of Claim 52 under 35 U.S.C. §103(a) as being unpatentable by Lindemann in view of Sato (Schotz and/or Roberts), as well as, the numerous assertions by the Examiner that claimed elements are notorious, is respectfully traversed. Thus, the rejection of Claim 52 under 35 U.S.C. §103(a) should be withdrawn.

On page 13 of the FOA, when rejecting claims 43, 44 and 49-52, the Examiner relies on the rejections provided for 19, 27 and 30. However, Claim 30 is not rejected under Lindemann in view of Sato (Schotz and/or Roberts).

Claim Rejections Under 35 U.S.C. §103
Lindemann et al. in view of Sato and in further view of Benthin (U.S. Patent 5,790,595)

The rejection of Claims 30-32 and 53 under 35 U.S.C. §103(a) as being unpatentable by Lindemann et al. (U.S. Patent Application 2004/0223622) in view of Sato (U.S. Patent 4,970,637) in further view of Benthin (U.S. Patent 5,790,595) is respectfully traversed.

As to Claim 30, Claim 30 includes similar claim limitations as claim 19. Thus, the remarks set forth above in relation to Lindemann, Sato and the combination of Lindemann and Sato, as applied to Claim 19 equally apply.

SONY EXHIBIT 1005 – 0809

The FOA acknowledges that Lindemann as modified by Sato does not "disclose that the receiver utilizes embedded fuzzy logic." Thus, the rejection relies on Benthin.

First, Claim 30 includes "*fuzzy logic to enhance detection of the unique user code*." Since Lindemann does not require a "*unique user code*," there is no need or motivation to place "*fuzzy logic to enhance detection of the unique user code*," in the receiver of Lindemann.

Applicant observes that Benthin is relied upon for soft decisions in a receiver or during demodulation of a signal. (See page 14 of the FOA.) However, Benthin does not teach "*fuzzy logic to enhance detection of the unique user code*," in the receiver. Thus, any combination of Lindemann in view of Sato and Benthin still would not produce applicant's claimed invention.

In view of the foregoing remarks, the rejection of Claim 30 under 35 U.S.C. §103(a) as being unpatentable by Lindemann in view of Sato in further view of Benthin, Schotz and/or Roberts, as well as, the numerous assertions by the Examiner that claimed elements are notorious, is respectfully traversed. Thus, the rejection of Claim 30 under 35 U.S.C. §103(a) should be withdrawn.

Dependent Claims 31 and 32 depend directly or indirectly from independent Claim 30. These dependent claims contain all of the limitations of independent Claim 30, thus, any rejections under 35 U.S.C. §103 should be withdrawn by virtue of their dependency from independent Claim 30.

Applicant believes that many of the dependent Claims 31-32 recite other features that are clearly lacking from the applied references, and do not acquiesce to any of the rejections.

As to Claim 32, Lindemann is directed to a "digital wireless loudspeaker system" with surround sound capability. Thus, modifying Lindemann to incorporate the teachings of Lindemann as modified by Sato (Schotz and/or Roberts) into a headphone set is using applicant's own disclosure. Furthermore, such a modification destroys the intended operation of Lindemann, the primary reference, to disperse

SONY EXHIBIT 1005 – 0810

multiple speakers with speaker groups in different rooms as well as provide a "full complement of six surround sound speakers."

Claim 53 includes a positive recitation of a "*unique user code bit sequence*" and "*a fuzzy logic detector to enhance detection of the unique user code bit sequence.*" The remarks set forth above in relation to Claim 30 equally apply to Claim 53.

In view of the foregoing amendments and remarks, the rejection of Claim 53 under 35 U.S.C. §103(a) as being unpatentable by Lindemann in view of Sato in further view of Benthin (Schotz and/or Roberts), as well as, the numerous assertions by the Examiner that claimed elements are notorious, is respectfully traversed. Thus, the rejection of Claim 53 under 35 U.S.C. §103(a) should be withdrawn.

Claim Rejections Under 35 U.S.C. §103
Lindemann et al. (U.S. Patent Application 2004/0223622)

The rejection of Claims 41 and 42 under 35 U.S.C. §103(a) as being unpatentable by Lindemann (U.S. Patent Application 2004/0223622) is respectfully traversed.

Lindemann as modified by the Examiner does not teach the deficiencies described in relation to independent Claims 33 and 34. Hence, Lindemann as modified does not teach the claimed invention since Lindemann as modified does not teach all the limitation of the base Claims (33 and 34) from which Claims 41 and 42 depend.

In view of the above remarks, the rejection of Claims 41 and 42 under 35 U.S.C. §103(a) as being unpatentable by Lindemann should be withdrawn.

Claim Rejections Under 35 U.S.C. §103(a)
Lavelle (U.S. Patent 6,678,892)

The rejection of Claims 54, 55, 57 and 59 under 35 U.S.C. §103(a) as being unpatentable by Lavelle (U.S. Patent 6,678,892) is respectfully traversed.

Claim 54 recites

SONY EXHIBIT 1005 – 0811

...an audio source to provide an audio signal representative of music having an existing analog headphone plug;

a battery-powered transmitter coupled to ... via said analog headphone plug... (Emphasis added)

The FOA relies on the wireless transmitter 510 in FIG. 1B for the battery powered transmitter of Applicant's claim. The Examiner acknowledges in the FOA that Lavelle does not include headphone plugs. However, the Examiner states that "headphone plugs are notoriously well known in the art." The Examiner provides Applicant with an example of an iPod.

First, in Applicant's claim, both a headphone plug and a transmitter coupled to an audio source via the headphone plug is positively recited. Applicant observes that the transmitter and receiver of Lavelle are intended to be installed in a vehicle and would generally be permanent fixtures in the vehicle. The transmitter 510 is arranged to communicate with wireless headphone sets via CDMA. Hence, there is neither an "*existing analog headphone plug,*" as claimed, nor a need for one. More importantly, Lavelle has no need for a headphone plug since the original configuration of the primary reference (Lavelle) seeks to provide wireless communications in a vehicle (obviating the need for a headphone plug to connect the headphone).

Nonetheless, even assuming that Lavelle may be modified with a headphone plug, there is no teaching in Lavelle to further remove the transmitter 510 from the vehicle and couple this "transmitter" via a headphone plug (which is not even present in Lavelle). Nowhere in Lavelle is such an arrangement described, especially since a headphone plug does not exist in the first place. Hence, the Examiner is rejecting Applicant's invention on hindsight using applicant's own disclosure.

Applicant further observes that the "transmitter" 510 of Lavelle is battery powered by virtue of its installation in the vehicle and connection to the vehicle's battery source. Thus, for Lavelle's transmitter to utilize the charging (battery) system of a vehicle for power, it is necessary to connect the entertainment unit and transmitter

SONY EXHIBIT 1005 – 0812

by cable or cord to the charging (battery) system. Henceforth, removing the transmitter 510 from the vehicle's battery source destroys the transmitter's ability to use the vehicle's battery source relied upon in the Examiner's rejection on page 17 of the FOA.

Additionally, while Lavelle employs CDMA communications between the transmitter and headphone, Lavelle does not teach a unique user code, as claimed. In the CDMA embodiment of Lavelle, Walsh code generators and PN (pseudo random number) generators are described. However, while these generators produce a code, such code is designed to change. Thus, Lavelle codes are not a "unique" user code.

Applicant observes that Lavelle provides multiple headphone sets in a vehicle and intends to minimize interference between the headphone sets [Lavelle 6,678,892 column 6 lines 43 – 45 "...the wireless signals may be encoded to prevent interference between the two wireless headphone sets 152, 154."]. By contrast, claim 54 states "... CDMA communication ...provide a particular user with private audio reproduction free of interference from other users of other wireless digital audio music systems in a shared space." Each wireless digital audio music system consists of a CDMA transmitter and a CDMA receiver headphone; hence, interference between a particular CDMA receiver headphone of a wireless digital audio music system and the CDMA transmitters of other wireless digital audio music systems, in a shared space, is eliminated. However, Lavelle's CDMA embodiment does not address interference between a headphone set and many same transmitters sharing the same space. Additionally, Lavelle does not also "*provide a particular user with private audio reproduction free of interference from other users of other wireless digital audio music systems in a shared space,*" as claimed. Lavelle does not use a unique user code.

In Applicant's invention, both the transmitter and receiver of the wireless digital audio music system are battery-powered for use that includes portable audio sources so the wireless digital audio music system is without cable or cord to limit the mobility of a user operating a portable music player. Because the user is mobile, two or more

SONY EXHIBIT 1005 – 0813

wireless digital audio music systems may be in use at the same time in a shared space. In this event, a particular wireless digital audio music system (containing a transmitter and receiver) does not interfere with any other wireless digital audio music system (containing another transmitter and receiver) in a shared space.

As stated previously by Applicant, in the June 11, 2007 Response "It is well known by those skilled in the art that radio frequency (RF) interference originates from a source (i.e. transmitter) external to a RF signal path and produces undesired artifacts in the RF signal." Lavelle's CDMA system contains only one transmitter [Lavelle column 7 lines 26 – 28 states "It is to be appreciated that the use of CDMA technology enables a single transmitter (i.e., wireless transmitter 510) to transmit all programs simultaneously"]. Hence, Lavelle's CDMA system does not address headphone receiver interference due to many same transmitters sharing the same space because the system contains only one transmitter for the CDMA embodiment.

Claims 55 and 59 contains similar language as claim 54. Thus, the remarks above in relation to Claim 54 equally apply to Claims 55 and 59.

In view of the foregoing remarks, the rejection of Claims 54, 55 and 59 under 35 U.S.C. §103(a) as being unpatentable over Lavelle (U.S. Patent 6,678,892) is respectfully traversed. Thus, the rejection of Claims 54 and 55 under 35 U.S.C. §103(a) should be withdrawn.

As to Claim 57, Lavelle or Lavelle as modified does not teach a "*unique user code*" and *"free of interference from other users of other wireless digital audio music systems in a shared space."*

Claim Rejections Under 35 U.S.C. §103(a)
Lavelle in view of Benthin

The rejection of Claims 56 and 58 under 35 U.S.C. §103(a) as being unpatentable by Lavelle (U.S. Patent 6,678,892) in view of Benthin (U.S. Patent 5,790,595) is respectfully traversed.

SONY EXHIBIT 1005 – 0814

Claim 56, by virtue of its dependency, contains all of the limitations of Independent Claim 55, and therefore allowable. Additionally, it recites features that are clearly lacking from Lavelle. Lavelle does not teach a "unique user code." Thus, there is no motivation to modify Lavelle with a fuzzy logic detector to enhance the detection of the "unique user code."

Claim 58, by virtue of its dependency, contains all of the limitations of Independent Claim 57, and therefore allowable. Additionally, it recites features that are clearly lacking from Lavelle. Lavelle does not teach a "unique user code." Thus, there is no motivation to modify Lavelle with a fuzzy logic detector to enhance the detection of the "unique user code."

In view of the foregoing remarks, the rejection of Claims 56 and 58 under 35 U.S.C. §103(a) as being unpatentable over Lavelle (U.S. Patent 6,678,892) in view of Benthin (U.S. Patent 5,790,595) is respectfully traversed. Thus, the rejection of Claims 56 and 58 under 35 U.S.C. §103(a) should be withdrawn.

Conclusion

In view of the foregoing remarks, Applicant believes that the application is in condition for allowance. If for any reason the Examiner finds the application other than in condition for allowance, Applicant respectfully requests the Examiner to call the undersigned attorney at the telephone number listed herein below to discuss any steps necessary for placing the application in condition for allowance.

In the event that any additional fees are due, the Commissioner is hereby authorized to charge any fees, which may be required by or to give effect the to this paper to **Deposit Account #50-4010**. A duplicate copy of this authorization is enclosed herewith.

SONY EXHIBIT 1005 – 0815

Respectfully submitted,
THE PATEL LAW FIRM, P.C.

Date: September 20th, 2007

Natu J. Patel
USPTO Reg. No. 39,559

NJP/lv/ec
Enclosure:
THE PATEL LAW FIRM, P.C.
2532 Dupont Drive
Irvine, California 92612-1524
Business: (949) 955-1077
Facsimile: (949) 955-1877
www.thepatellawfirm.com
NPatel@thePatelLawFirm.com

SONY EXHIBIT 1005 – 0816

CERTIFICATE OF FACSIMILE TRANSMISSION

I hereby certify that this paper (along with any paper referred to as being attached or enclosed) is being electronically transmitted to:

United States Patent & Trademark Office
Mail Stop AF
Commissioner for Patents
Post Office Box 1450
Alexandria, Virginia 22313-1450

9/20/07

Natu J. Patel, USPTO Reg. No. 39,559 Date:

Electronic Acknowledgement Receipt

EFS ID:	2222951
Application Number:	10648012
International Application Number:	
Confirmation Number:	3337
Title of Invention:	WIRELESS DIGITAL AUDIO SYSTEM
First Named Inventor/Applicant Name:	C. Earl Woolfork
Customer Number:	48162
Filer:	Natu J. Patel
Filer Authorized By:	
Attorney Docket Number:	W003-4000
Receipt Date:	20-SEP-2007
Filing Date:	26-AUG-2003
Time Stamp:	18:28:01
Application Type:	Utility under 35 USC 111(a)

Payment information:

Submitted with Payment	no

File Listing:

Document Number	Document Description	File Name	File Size(Bytes) /Message Digest	Multi Part /.zip	Pages (if appl.)
1		E_Woolfork_OA_Response.pdf	2739478 96c12533db8b312eb4d4acf8c1c44f369cf22331	yes	33

	Multipart Description/PDF files in .zip description		
	Document Description	**Start**	**End**
	Amendment After Final	1	1
	Claims	2	15
	Applicant Arguments/Remarks Made in an Amendment	16	32
	Miscellaneous Incoming Letter	33	33
Warnings:			
Information:			
	Total Files Size (in bytes):	2739478	

This Acknowledgement Receipt evidences receipt on the noted date by the USPTO of the indicated documents, characterized by the applicant, and including page counts, where applicable. It serves as evidence of receipt similar to a Post Card, as described in MPEP 503.

New Applications Under 35 U.S.C. 111
If a new application is being filed and the application includes the necessary components for a filing date (see 37 CFR 1.53(b)-(d) and MPEP 506), a Filing Receipt (37 CFR 1.54) will be issued in due course and the date shown on this Acknowledgement Receipt will establish the filing date of the application.

National Stage of an International Application under 35 U.S.C. 371
If a timely submission to enter the national stage of an international application is compliant with the conditions of 35 U.S.C. 371 and other applicable requirements a Form PCT/DO/EO/903 indicating acceptance of the application as a national stage submission under 35 U.S.C. 371 will be issued in addition to the Filing Receipt, in due course.

New International Application Filed with the USPTO as a Receiving Office
If a new international application is being filed and the international application includes the necessary components for an international filing date (see PCT Article 11 and MPEP 1810), a Notification of the International Application Number and of the International Filing Date (Form PCT/RO/105) will be issued in due course, subject to prescriptions concerning national security, and the date shown on this Acknowledgement Receipt will establish the international filing date of the application.

PTO/SB/06 (12-04)
Approved for use through 7/31/2006. OMB 0651-0032
U.S. Patent and Trademark Office; U.S. DEPARTMENT OF COMMERCE
Under the Paperwork Reduction Act of 1995, no persons are required to respond to a collection of information unless it displays a valid OMB control number.

PATENT APPLICATION FEE DETERMINATION RECORD

Substitute for Form PTO-875

Application or Docket Number 10/648,012

APPLICATION AS FILED – PART I

FOR	(Column 1) NUMBER FILED	(Column 2) NUMBER EXTRA	SMALL ENTITY RATE ($)	SMALL ENTITY FEE ($)	OR	OTHER THAN SMALL ENTITY RATE ($)	OTHER THAN SMALL ENTITY FEE ($)
BASIC FEE (37 CFR 1.16(a), (b), or (c))							
SEARCH FEE (37 CFR 1.16(k), (i), or (m))							
EXAMINATION FEE (37 CFR 1.16(o), (p), or (q))							
TOTAL CLAIMS (37 CFR 1.16(i))	minus 20 =	*	X =		OR	X =	
INDEPENDENT CLAIMS (37 CFR 1.16(h))	minus 3 =	*	X =			X =	
APPLICATION SIZE FEE (37 CFR 1.16(s))	If the specification and drawings exceed 100 sheets of paper, the application size fee due is $250 ($125 for small entity) for each additional 50 sheets or fraction thereof. See 35 U.S.C. 41(a)(1)(G) and 37 CFR 1.16(s).						
MULTIPLE DEPENDENT CLAIM PRESENT (37 CFR 1.16(j))							
			TOTAL			TOTAL	

* If the difference in column 1 is less than zero, enter "0" in column 2.

APPLICATION AS AMENDED – PART II

AMENDMENT A	(Column 1) CLAIMS REMAINING AFTER AMENDMENT		(Column 2) HIGHEST NUMBER PREVIOUSLY PAID FOR	(Column 3) PRESENT EXTRA	SMALL ENTITY RATE ($)	SMALL ENTITY ADDITIONAL FEE ($)	OR	OTHER THAN SMALL ENTITY RATE ($)	OTHER THAN SMALL ENTITY ADDITIONAL FEE ($)
Total (37 CFR 1.16(i))	* 37	Minus	** 28	= 9	X =		OR	X =	
Independent (37 CFR 1.16(h))	* 13	Minus	*** 19	=	X =		OR	X =	
Application Size Fee (37 CFR 1.16(s))									
FIRST PRESENTATION OF MULTIPLE DEPENDENT CLAIM (37 CFR 1.16(j))							OR		
					TOTAL ADD'L FEE		OR	TOTAL ADD'L FEE	

AMENDMENT B	(Column 1) CLAIMS REMAINING AFTER AMENDMENT		(Column 2) HIGHEST NUMBER PREVIOUSLY PAID FOR	(Column 3) PRESENT EXTRA	SMALL ENTITY RATE ($)	SMALL ENTITY ADDITIONAL FEE ($)	OR	OTHER THAN SMALL ENTITY RATE ($)	OTHER THAN SMALL ENTITY ADDITIONAL FEE ($)
Total (37 CFR 1.16(i))	*	Minus	**	=	X =		OR	X =	
Independent (37 CFR 1.16(h))	*	Minus	***	=	X =		OR	X =	
Application Size Fee (37 CFR 1.16(s))									
FIRST PRESENTATION OF MULTIPLE DEPENDENT CLAIM (37 CFR 1.16(j))							OR		
					TOTAL ADD'L FEE		OR	TOTAL ADD'L FEE	

* If the entry in column 1 is less than the entry in column 2, write "0" in column 3.
** If the "Highest Number Previously Paid For" IN THIS SPACE is less than 20, enter "20".
*** If the "Highest Number Previously Paid For" IN THIS SPACE is less than 3, enter "3".
The "Highest Number Previously Paid For" (Total or Independent) is the highest number found in the appropriate box in column 1.

This collection of information is required by 37 CFR 1.16. The information is required to obtain or retain a benefit by the public which is to file (and by the USPTO to process) an application. Confidentiality is governed by 35 U.S.C. 122 and 37 CFR 1.14. This collection is estimated to take 12 minutes to complete, including gathering, preparing, and submitting the completed application form to the USPTO. Time will vary depending upon the individual case. Any comments on the amount of time you require to complete this form and/or suggestions for reducing this burden, should be sent to the Chief Information Officer, U.S. Patent and Trademark Office, U.S. Department of Commerce, P.O. Box 1450, Alexandria, VA 22313-1450. DO NOT SEND FEES OR COMPLETED FORMS TO THIS ADDRESS. **SEND TO: Commissioner for Patents, P.O. Box 1450, Alexandria, VA 22313-1450.**

If you need assistance in completing the form, call 1-800-PTO-9199 and select option 2.

SONY EXHIBIT 1005 – 0820

UNITED STATES PATENT AND TRADEMARK OFFICE

UNITED STATES DEPARTMENT OF COMMERCE
United States Patent and Trademark Office
Address: COMMISSIONER FOR PATENTS
P.O. Box 1450
Alexandria, Virginia 22313-1450
www.uspto.gov

APPLICATION NO.	FILING DATE	FIRST NAMED INVENTOR	ATTORNEY DOCKET NO.	CONFIRMATION NO.
10/648,012	08/26/2003	C. Earl Woolfork	W003-4000	3337

48162 7590 10/11/2007

THE PATEL LAW FIRM, P.C.
2532 DUPONT DRIVE
IRVINE, CA 92612

EXAMINER	
FLANDERS, ANDREW C	
ART UNIT	PAPER NUMBER
2615	

MAIL DATE	DELIVERY MODE
10/11/2007	PAPER

Please find below and/or attached an Office communication concerning this application or proceeding.

The time period for reply, if any, is set in the attached communication.

Advisory Action Before the Filing of an Appeal Brief	Application No.	Applicant(s)	
	10/648,012	WOOLFORK, C. EARL	
	Examiner	Art Unit	
	Andrew C. Flanders	2615	

--The MAILING DATE of this communication appears on the cover sheet with the correspondence address --

THE REPLY FILED 20 September 2007 FAILS TO PLACE THIS APPLICATION IN CONDITION FOR ALLOWANCE.

1. ☒ The reply was filed after a final rejection, but prior to or on the same day as filing a Notice of Appeal. To avoid abandonment of this application, applicant must timely file one of the following replies: (1) an amendment, affidavit, or other evidence, which places the application in condition for allowance; (2) a Notice of Appeal (with appeal fee) in compliance with 37 CFR 41.31; or (3) a Request for Continued Examination (RCE) in compliance with 37 CFR 1.114. The reply must be filed within one of the following time periods:
   a) ☒ The period for reply expires 3 months from the mailing date of the final rejection.
   b) ☐ The period for reply expires on: (1) the mailing date of this Advisory Action, or (2) the date set forth in the final rejection, whichever is later. In no event, however, will the statutory period for reply expire later than SIX MONTHS from the mailing date of the final rejection.

   Examiner Note: If box 1 is checked, check either box (a) or (b). ONLY CHECK BOX (b) WHEN THE FIRST REPLY WAS FILED WITHIN TWO MONTHS OF THE FINAL REJECTION. See MPEP 706.07(f).

Extensions of time may be obtained under 37 CFR 1.136(a). The date on which the petition under 37 CFR 1.136(a) and the appropriate extension fee have been filed is the date for purposes of determining the period of extension and the corresponding amount of the fee. The appropriate extension fee under 37 CFR 1.17(a) is calculated from: (1) the expiration date of the shortened statutory period for reply originally set in the final Office action; or (2) as set forth in (b) above, if checked. Any reply received by the Office later than three months after the mailing date of the final rejection, even if timely filed, may reduce any earned patent term adjustment. See 37 CFR 1.704(b).

NOTICE OF APPEAL

2. ☐ The Notice of Appeal was filed on _____. A brief in compliance with 37 CFR 41.37 must be filed within two months of the date of filing the Notice of Appeal (37 CFR 41.37(a)), or any extension thereof (37 CFR 41.37(e)), to avoid dismissal of the appeal. Since a Notice of Appeal has been filed, any reply must be filed within the time period set forth in 37 CFR 41.37(a).

AMENDMENTS

3. ☐ The proposed amendment(s) filed after a final rejection, but prior to the date of filing a brief, will not be entered because
   (a) ☐ They raise new issues that would require further consideration and/or search (see NOTE below);
   (b) ☐ They raise the issue of new matter (see NOTE below);
   (c) ☐ They are not deemed to place the application in better form for appeal by materially reducing or simplifying the issues for appeal; and/or
   (d) ☐ They present additional claims without canceling a corresponding number of finally rejected claims.

   NOTE: _____. (See 37 CFR 1.116 and 41.33(a)).
4. ☐ The amendments are not in compliance with 37 CFR 1.121. See attached Notice of Non-Compliant Amendment (PTOL-324).
5. ☐ Applicant's reply has overcome the following rejection(s): _____.
6. ☐ Newly proposed or amended claim(s) _____ would be allowable if submitted in a separate, timely filed amendment canceling the non-allowable claim(s).
7. ☐ For purposes of appeal, the proposed amendment(s): a) ☐ will not be entered, or b) ☐ will be entered and an explanation of how the new or amended claims would be rejected is provided below or appended.

   The status of the claim(s) is (or will be) as follows:
   Claim(s) allowed: _____.
   Claim(s) objected to: _____.
   Claim(s) rejected: _____.
   Claim(s) withdrawn from consideration: _____.

AFFIDAVIT OR OTHER EVIDENCE

8. ☐ The affidavit or other evidence filed after a final action, but before or on the date of filing a Notice of Appeal will not be entered because applicant failed to provide a showing of good and sufficient reasons why the affidavit or other evidence is necessary and was not earlier presented. See 37 CFR 1.116(e).
9. ☐ The affidavit or other evidence filed after the date of filing a Notice of Appeal, but prior to the date of filing a brief, will not be entered because the affidavit or other evidence failed to overcome all rejections under appeal and/or appellant fails to provide a showing a good and sufficient reasons why it is necessary and was not earlier presented. See 37 CFR 41.33(d)(1).
10. ☐ The affidavit or other evidence is entered. An explanation of the status of the claims after entry is below or attached.

REQUEST FOR RECONSIDERATION/OTHER

11. ☐ The request for reconsideration has been considered but does NOT place the application in condition for allowance because: _____.
12. ☐ Note the attached Information Disclosure Statement(s). (PTO/SB/08) Paper No(s). _____
13. ☒ Other: See attached remarks.

SINH TRAN
SUPERVISORY PATENT EXAMINER

SONY EXHIBIT 1005 – 0822

DETAILED ACTION

Response to Arguments

Applicant's arguments filed 20 September 2007 have been fully considered but they are not persuasive.

Regarding the arguments to the claim rejections under 35 U.S.C. 112 first paragraph, Applicant points to paragraphs [0010], [0013] and [0014] of the specification to show that the fuzzy logic detector within the receiver is enabled. Examiner respectfully disagrees. The paragraphs pointed to by Applicant do show a fuzzy logic method. However, it is unclear whether this "fuzzy logic detector" is a method, software, logic or hardware device. Furthermore, the specification leads one of ordinary skill in the art to believe that this "detector" is a hardware module of some sort. If it is to be a hardware module, it is not sufficiently shown in Figure 3, more specifically, it is not shown how this module interacts with the rest of the elements in Figure 3 (i.e. where is this detector located with respect to the other block elements?) Further, if it is just to be software, which Examiner does not necessarily interpret from a reading of the specification, which module in Figure 3. performs these operations. Neither of these elements are addressed by the specification and thus the claim cannot be enabled.

Applicants arguments regarding the 35 U.S.C. 102(e) rejection in view of Lindemann (U.S. Patent Application Publication 2004/0223622) are not persuasive for

the same reasons stated before in the Final Rejection mailed 23 July 2007. To further clarify, Applicant is alleging that Lindemann is not directed to a system capable of

(1) providing a user with independent audio reproduction; and

(2) reproduction free of interference from other users or wireless devices.

Examiner respectfully disagrees with this allegation. Element (1) can be met in multiple ways. For example, a single user of Lindemann's system enjoying a music selection would meet the limitation of "independent audio reproduction" by the virtue of listening to the music alone (i.e. independently). Further, the speakers can be independently operated and selected as is shown in the passages pointed out by Applicant. Even further, the passages noted by Applicant state that the music may be enjoyed in separate rooms such as the kitchen or living room (other rooms clearly anticipated) thus a user in the kitchen may be listening to one musical selection while the user in the living room might not, thus the kitchen user is listening to "independent audio reproduction."

Element (2) is clearly met by virtue of the fact that it is CDMA reproduction. CDMA's entire goal is to minimize interference to provide a clear transmission. Furthermore, the status messages indicate to the speakers which speakers should operate and which speakers should reproduce what. This is succinctly shown in paragraph 66. The fact that the speakers decode status messages to determine whether or not to produce music as well as what to produce (i.e. Left speaker reproduces the Left status message transmission and not the Right status message

transmission) clearly meets the "reproduction free of interference from other users or **wireless devices**.

Applicants arguments regarding the claim rejections under 35 U.S.C.103 of Lindemann (U.S. Patent Application Publication 2004/0223622) in view of Sato (U.S. Patent 4,970,637) are not persuasive.

Applicant alleges that the combination does not teach (1) for private audio reproduction of said music or (2) reproduce said audio output representative of said music, if the unique user code bit sequence is recognized.

Regarding (1), as shown above in the 102(e) arguments of Lindemann, the system may enable speakers in differing rooms, i.e. the kitchen or living room. Thus a user may enjoy music in the living room completely separate from another user in the kitchen, thus being "private".

Regarding (2) the status messages are equated to the unique user code as stated by Applicant. To further clarify, para [0065] explicitly states that "the status information contains commands to enable or disable a particular group of speakers." Thus, if the status message enables a speaker (i.e. if the unique user code bit sequence is recognized [in this case if the enable command is recognized]) the speaker reproduces music (i.e. reproduce said audio output representative of said music).

Applicant further alleges regarding claim 28 that modifying Lindemann into a headphone set is using Applicant's own disclosure and that such a modification

destroys the intended operation of Lindemann. Examiner respectfully disagrees. First, Applicant has provided no evidence as support for this allegation. Second, Examiner maintains that using headphones in place of speakers is notoriously well known. Lindemann is concerned with enabling and disabling speaker sets in multiple rooms/zones within a household. Often speaker systems will include a port or other connection to allow a user to insert a headphone that disables the speaker system and enables the headphones. This does not destroy the purpose of Lindemann which is to provide music to multiple zones, it merely changes the end reproduction unit.

Regarding the arguments pertaining to claim 51, Lindemann's status messages read upon the claimed limitation of the unique user code as shown above.

Applicant states regarding claim 30:

"First, Claim 30 includes "fuzzy logic to enhance detection of the unique user code." Since Lindemann does not require a "unique user code," there is no need or motivation to place "fuzzy logic to enhance detection of the unique user code," in the receiver of Lindemann."

"Applicant observes that Benthin is relied upon for soft decisions in a receiver or during demodulation of a signal. (See page 14 of the FOA.) However, Benthin does not teach "fuzzy logic to enhance detection of the unique user code," in the receiver. Thus, any combination of Lindemann in view of Sato and Benthin still would not produce applicant's claimed invention."

Examiner respectfully disagrees. With respect to the first allegation, it is submitted that it is clearly shown above how the status messages correspond to the unique user code limitation. Benethin clearly teaches using soft decisions in a receiver (i.e. fuzzy logic). Applying the teachings of Benethin (specifically the soft decision

decoding) to the receiver's of Lindemann to determine the status messages, meets the claimed limitation of "fuzzy logic (i.e. soft decision decoding) to enhance detection of the unique user code (i.e. Lindemann's status messages).

Regarding the arguments as to claim 50, Applicant alleges that Lavelle does not teach "an audio source to provide an audio signal representative of music having an existing analog headphone plug." Applicant states that "Lavelle has no need for a headphone plug since the original configuration of the primary reference seeks to provide wireless communications in a vehicle (obviating the need for a headphone plug to connect the headphone."

Examiner respectfully disagrees. First, while Lavelle does not explicitly teach an "an audio source to provide an audio signal representative of music having an existing analog headphone plug," it is at least suggested/made obvious. Lavelle recognizes in col. 4 lines 35 – 40 the need to accept other inputs not listed. Furthermore, in col. 5 lines 35 – 40 Lavelle further discusses accepting inputs from devices such as portable cd players, handheld video games etc. It is notoriously well known in the art that these devices typically provide an analog out headphone jack. While it is not explicitly stated, it is at least obvious that Lavelle's system is configured to accept these inputs from these devices outputs.

Furthermore, it appears to the Examiner that Applicant is misreading the rejection. It appears as though Applicant is arguing there would be no need to connect Lavelle's headphones to a speaker jack since they are already wireless. The Examiner

agrees with this statement, however this is never stated in the rejection. Rather, the rejection states that one audio source is the output from a portable devices headphone jack (i.e. an iPod) which corresponds directly to the portable devices stated in col. 5 lines 30 – 40. It is never argued by the Examiner to modify the headphones of Lavelle.

Applicant further alleges that there is no unique user code taught. Examiner respectfully disagrees. The specific carrier frequency enables the device to tune to a particular program. This is equated with the unique user code. If this was not unique to each headphone device, there would be nothing to prevent interference or allow any selection as shown in col. 7.

Applicant further alleges that Lavelle does not "provide a particular user with private audio reproduction free of interference from other users of other wireless digital audio music systems in a shared space."

Examiner is unsure of the logic behinds such an allegation. Examiner submits that the whole purpose to Lavelle is to provide at least two users of the system, wireless audio via headphones minimizing interference within a car. Lavelle allows two users to wear wireless headphones and enjoy two different pieces of media content. Essentially this provides a user (i.e. one of the listeners of the headphones) with private audio reproduction (i.e. by virtue of the nature of headphones) free from interference from other users (i.e. headphones 152 and 154 have the interference minimized utilizing CDMA technology col. 7) in a shared space (i.e. the interior of an automobile).

PTO/SB/21 (10-07)
Approved for use through 10/31/2007. OMB 0651-0031
U.S. Patent and Trademark Office; U.S. DEPARTMENT OF COMMERCE
Under the Paperwork Reduction Act of 1995, no persons are required to respond to a collection of information unless it displays a valid OMB control number.

TRANSMITTAL FORM

(to be used for all correspondence after initial filing)

Total Number of Pages in This Submission

Application Number	10/648,012
Filing Date	August 26, 2003
First Named Inventor	Woolfork, C. Earl
Art Unit	2615
Examiner Name	Flanders, Andrew C.
Attorney Docket Number	W003-4000

ENCLOSURES *(Check all that apply)*

- ☐ Fee Transmittal Form
  - ☐ Fee Attached
- ☐ Amendment/Reply
  - ☐ After Final
  - ☐ Affidavits/declaration(s)
- ☐ Extension of Time Request
- ☐ Express Abandonment Request
- ☐ Information Disclosure Statement
- ☐ Certified Copy of Priority Document(s)
- ☐ Reply to Missing Parts/ Incomplete Application
  - ☐ Reply to Missing Parts under 37 CFR 1.52 or 1.53
- ☐ Drawing(s)
- ☐ Licensing-related Papers
- ☐ Petition
- ☐ Petition to Convert to a Provisional Application
- ☐ Power of Attorney, Revocation Change of Correspondence Address
- ☐ Terminal Disclaimer
- ☐ Request for Refund
- ☐ CD, Number of CD(s) _____
  - ☐ Landscape Table on CD
- ☐ After Allowance Communication to TC
- ☐ Appeal Communication to Board of Appeals and Interferences
- ☑ Appeal Communication to TC **(Appeal Notice, Brief, Reply Brief)**
- ☐ Proprietary Information
- ☐ Status Letter
- ☐ Other Enclosure(s) (please identify below):

Remarks

SIGNATURE OF APPLICANT, ATTORNEY, OR AGENT

Firm Name	The Patel Law Firm, P.C.		
Signature	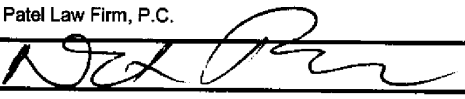		
Printed name	Natu J. Patel		
Date	October 22, 2007	Reg. No.	39,559

CERTIFICATE OF TRANSMISSION/MAILING

I hereby certify that this correspondence is being facsimile transmitted to the USPTO or deposited with the United States Postal Service with sufficient postage as first class mail in an envelope addressed to: Commissioner for Patents, P.O. Box 1450, Alexandria, VA 22313-1450 on the date shown below:

Signature			
Typed or printed name	Natu J. Patel	Date	October 22, 2007

This collection of information is required by 37 CFR 1.5. The information is required to obtain or retain a benefit by the public which is to file (and by the USPTO to process) an application. Confidentiality is governed by 35 U.S.C. 122 and 37 CFR 1.11 and1.14. This collection is estimated to 2 hours to complete, including gathering, preparing, and submitting the completed application form to the USPTO. Time will vary depending upon the individual case. Any comments on the amount of time you require to complete this form and/or suggestions for reducing this burden, should be sent to the Chief Information Officer, U.S. Patent and Trademark Office, U.S. Department of Commerce, P.O. Box 1450, Alexandria, VA 22313-1450. DO NOT SEND FEES OR COMPLETED FORMS TO THIS ADDRESS. **SEND TO: Commissioner for Patents, P.O. Box 1450, Alexandria, VA 22313-1450.**

If you need assistance in completing the form, call 1-800-PTO-9199 and select option 2.

PTO/SB/31 (10-07)
Approved for use through 10/31/2007. OMB 0651-0031
U.S. Patent and Trademark Office; U.S. DEPARTMENT OF COMMERCE
Under the Paperwork Reduction Act of 1995, no persons are required to respond to a collection of information unless it displays a valid OMB control number.

NOTICE OF APPEAL FROM THE EXAMINER TO THE BOARD OF PATENT APPEALS AND INTERFERENCES

Docket Number (Optional): W003 - 4000

I hereby certify that this correspondence is being facsimile transmitted to the USPTO or deposited with the United States Postal Service with sufficient postage as first class mail in an envelope addressed to "Commissioner for Patents, P.O. Box 1450, Alexandria, VA 22313-1450" [37 CFR 1.8(a)] on October 22, 2007

Signature: _____

Typed or printed name: Natu J. Patel

In re Application of: Woolfork, C. Earl

Application Number: 10/648,012 | Filed: 08/26/2003

For: Wireless Digital Audio Music System

Art Unit: 2615 | Examiner: Flanders, Andrew C.

Applicant hereby **appeals** to the Board of Patent Appeals and Interferences from the last decision of the examiner.

The fee for this Notice of Appeal is (37 CFR 41.20(b)(1)) $ 510.00

☑ Applicant claims small entity status. See 37 CFR 1.27. Therefore, the fee shown above is reduced by half, and the resulting fee is: $ 255.00

☐ A check in the amount of the fee is enclosed.

☐ Payment by credit card. Form PTO-2038 is attached.

☐ The Director has already been authorized to charge fees in this application to a Deposit Account. I have enclosed a duplicate copy of this sheet.

☑ The Director is hereby authorized to charge any fees which may be required, or credit any overpayment to Deposit Account No. 50-4010 . I have enclosed a duplicate copy of this sheet.

☐ A petition for an extension of time under 37 CFR 1.136(a) (PTO/SB/22) is enclosed.

WARNING: Information on this form may become public. Credit card information should not be included on this form. Provide credit card information and authorization on PTO-2038.

I am the

☐ applicant/inventor.

☐ assignee of record of the entire interest. See 37 CFR 3.71. Statement under 37 CFR 3.73(b) is enclosed. (Form PTO/SB/96)

☑ attorney or agent of record. Registration number 39,559

☐ attorney or agent acting under 37 CFR 1.34. Registration number if acting under 37 CFR 1.34. _____

Signature

NATU J. PATEL
Typed or printed name

(949) 559-1077
Telephone number

Date

NOTE: Signatures of all the inventors or assignees of record of the entire interest or their representative(s) are required. Submit multiple forms if more than one signature is required, see below*.

☐ *Total of _____ forms are submitted.

This collection of information is required by 37 CFR 41.31. The information is required to obtain or retain a benefit by the public which is to file (and by the USPTO to process) an application. Confidentiality is governed by 35 U.S.C. 122 and 37 CFR 1.11, 1.14 and 41.6. This collection is estimated to take 12 minutes to complete, including gathering, preparing, and submitting the completed application form to the USPTO. Time will vary depending upon the individual case. Any comments on the amount of time you require to complete this form and/or suggestions for reducing this burden, should be sent to the Chief Information Officer, U.S. Patent and Trademark Office, U.S. Department of Commerce, P.O. Box 1450, Alexandria, VA 22313-1450. DO NOT SEND FEES OR COMPLETED FORMS TO THIS ADDRESS. **SEND TO: Commissioner for Patents, P.O. Box 1450, Alexandria, VA 22313-1450.**

If you need assistance in completing the form, call 1-800-PTO-9199 and select option 2.

Electronic Patent Application Fee Transmittal

Application Number:	10648012
Filing Date:	26-Aug-2003
Title of Invention:	WIRELESS DIGITAL AUDIO SYSTEM
First Named Inventor/Applicant Name:	C. Earl Woolfork
Filer:	Natu J. Patel
Attorney Docket Number:	W003-4000

Filed as Small Entity

Utility Filing Fees

Description	Fee Code	Quantity	Amount	Sub-Total in USD($)
Basic Filing:				
Pages:				
Claims:				
Miscellaneous-Filing:				
Petition:				
Patent-Appeals-and-Interference:				
Notice of appeal	2401	1	255	255
Post-Allowance-and-Post-Issuance:				
Extension-of-Time:				

Description	Fee Code	Quantity	Amount	Sub-Total in USD($)
Miscellaneous:				
			Total in USD ($)	**255**

Electronic Acknowledgement Receipt

EFS ID:	2350237
Application Number:	10648012
International Application Number:	
Confirmation Number:	3337
Title of Invention:	WIRELESS DIGITAL AUDIO SYSTEM
First Named Inventor/Applicant Name:	C. Earl Woolfork
Customer Number:	48162
Filer:	Natu J. Patel
Filer Authorized By:	
Attorney Docket Number:	W003-4000
Receipt Date:	22-OCT-2007
Filing Date:	26-AUG-2003
Time Stamp:	14:41:14
Application Type:	Utility under 35 USC 111(a)

Payment information:

Submitted with Payment	yes
Payment was successfully received in RAM	$255
RAM confirmation Number	7329
Deposit Account	

File Listing:

Document Number	Document Description	File Name	File Size(Bytes) /Message Digest	Multi Part /.zip	Pages (if appl.)

1		NoticeOfAppeal.pdf	79346 ef38d848d535bf8af6b86c00f41c7fdbea26d942	yes	2

	Multipart Description/PDF files in .zip description		
	Document Description	**Start**	**End**
	Miscellaneous Incoming Letter	1	1
	Notice of Appeal Filed	2	2

Warnings:

Information:

2	Fee Worksheet (PTO-06)	fee-info.pdf	8118 ef2f45d24d05121d3d26ad972780ec2fcd0be1db	no	2

Warnings:

Information:

Total Files Size (in bytes):	87464

This Acknowledgement Receipt evidences receipt on the noted date by the USPTO of the indicated documents, characterized by the applicant, and including page counts, where applicable. It serves as evidence of receipt similar to a Post Card, as described in MPEP 503.

New Applications Under 35 U.S.C. 111
If a new application is being filed and the application includes the necessary components for a filing date (see 37 CFR 1.53(b)-(d) and MPEP 506), a Filing Receipt (37 CFR 1.54) will be issued in due course and the date shown on this Acknowledgement Receipt will establish the filing date of the application.

National Stage of an International Application under 35 U.S.C. 371
If a timely submission to enter the national stage of an international application is compliant with the conditions of 35 U.S.C. 371 and other applicable requirements a Form PCT/DO/EO/903 indicating acceptance of the application as a national stage submission under 35 U.S.C. 371 will be issued in addition to the Filing Receipt, in due course.

New International Application Filed with the USPTO as a Receiving Office
If a new international application is being filed and the international application includes the necessary components for an international filing date (see PCT Article 11 and MPEP 1810), a Notification of the International Application Number and of the International Filing Date (Form PCT/RO/105) will be issued in due course, subject to prescriptions concerning national security, and the date shown on this Acknowledgement Receipt will establish the international filing date of the application.

Docket No.: W003-4000 PATENT

IN THE UNITED STATES PATENT AND TRADEMARK OFFICE

In re Application of: WOOLFORK, C. Earl.	:	
Serial No. 10/648,012	:	Group Art Unit: 2615
Confirmation No.: 3337	:	Examiner: Flanders, Andrew
Filed: August 26, 2003	:	
For: WIRELESS DIGITAL AUDIO SYSTEM	:	

APPEAL BRIEF IN COMPLIANCE WITH 37 CFR § 41.37

Attention: Mail Stop Appeal Brief-Patents
Commissioner for Patents
P.O. Box 1450
Alexandria, VA 22313-1450

Dear Sir:

The Appellant respectfully submits this Appeal Brief pursuant to 37 C.F.R. §41.37, in support of the Notice of Appeal filed October 22, 2007[1]. The required fee under 37 C.F.R. § 41.20(b)(2) is submitted herewith. This Appeal is filed to appeal the rejections of Claims 19-34, 37, 38, and 41-59 set forth in the Final Office Action ("FOA") mailed July 23, 2007.

This Appeal Brief is being submitted within two (2) months of the October 22, 2007 filing date of the Notice of Appeal. In compliance with 37 CFR § 41.37, this Appeal Brief has the following sections, as identified in the Table of Contents below.

[1] Appellant's Petition to Make Special under 37 CFR Section 1.102(d) and MPEP Section 708.02, SECTION II (Infringement) was granted by the Director on January 25, 2005.

TABLE OF CONTENTS

IN THE UNITED STATES PATENT AND TRADEMARK OFFICE 1

I. Real Party in Interest 3

II. Related Appeals and Interferences 4

III. Status of Claims 5

IV. Status of Amendments 6

V. Summary of Claimed Subject Matter 7

VI. Grounds of Rejection to be Reviewed ON APPEAL 14

VII. Argument 16
A. Introduction 16
B. Detailed Arguments 16

VIII. Claims Appendix 47

IX. Evidence Appendix 59

X. Related Proceedings Appendix 60

I. REAL PARTY IN INTEREST

The real party in interest is C. Earl Woolfork.

II. RELATED APPEALS AND INTERFERENCES

There are currently no other appeals or interferences of which Appellant or Appellant's legal representative are aware, that will directly affect or be directly affected by or have a bearing on the Board's decision in the pending appeal.

III. STATUS OF CLAIMS

The following is the status of all of the claims:

(a) Claims 1-18, 35-36 and 39-40 are cancelled.

(b) Claims 19-34, 37, 38 and 41-59 stand rejected and are being appealed.

IV. STATUS OF AMENDMENTS

No amendments to the Claims subsequent to the Final Office Action mailed July 23, 2007 have been filed by the Appellant.

V. SUMMARY OF CLAIMED SUBJECT MATTER

Appellant's invention is generally directed to a wireless digital audio system 10 for coded digital transmission of an analog audio signal from any music audio player with an analog headphone jack 82 to a receiver headphone located away from the audio player. Fuzzy logic technology may be utilized by the wireless digital audio music system to enhance bit detection. A battery-powered transmitter 20 may include a headphone plug 22 in communication with any suitable music audio source 80. For reception, a battery-powered headphone receiver 50 may use embedded fuzzy logic to enhance user code bit detection. Fuzzy logic detection may be used to enhance user code bit detection during decoding of the transmitted audio signal. The wireless digital audio music system provides private listening without interference from other users or wireless devices and without the use of conventional cable connections.

Independent Claims 19 and 43 are directed to a wireless digital audio system 10 for transmitting audio from at least one audio source wirelessly via at least one digital audio transmitter 20 to at least one receiver 50, wherein the receiver 50 is a headphone receiver (See paragraph [0009], and FIG. 1, of the Instant Application[2], and paragraph [0011] of Parent Application[3]).

[2] Unless reference to the paragraph is made specifically to the Parent Application, all paragraph numbers and Figure numbers relate to the Instant Application. Instant Application is the CIP Application that was filed on August 26, 2003, application no. 10/648,012 and subsequent amendment entered thereafter during the prosecution. CIP Application claimed priority from the Parent Application that was filed on December 21, 2001.

[3] Parent Application refers to the application filed by the same inventor on December 21, 2001, application no. 10/027,391 and published on June 26, 2003, Publication No. US 2003/0118196 A1.

With reference to FIG. 2 and paragraph [0009], the transmitter 20 includes a first analog low pass filter 30 receiving the audio output, a digital low pass filter 34, an analog-to-digital converter (ADC) 32 operatively coupled between the first analog low pass filter and the digital low pass filter, a first encoder 36 receiving output from the digital low pass filter 34 and being configured to reduce intersymbol interference (ISI), a second channel encoder 38 operatively coupled to the first encoder 36 and adapted to reduce transmission errors, a digital modulator 42 operatively coupled to the second channel encoder 38, and a differential phase shift key (DPSK) module 48 for transmitting a corresponding DSSS signal having said audio output representative of the music and the unique user code bit sequence (paragraph [0014] of the Parent Application).

With reference to FIG. 3 and paragraph [0010], the receiver 50 includes a band pass filter (BPF) 54 configured to process the transmitted DSSS signal, a direct conversion module 56, a digital demodulator 62 adapted to process an output from the direct conversion module 56, a Viterbi decoder 66 coupled to the digital demodulator 62 and for generating a corresponding digital output. The receiver 50 further includes a source decoder 68 for processing the digital output from the Viterbi decoder 66. The receiver 50 further includes a second analog low pass filter 72, and a digital-to-analog converter (DAC) 70 operatively coupled between the source decoder 68 and the second analog low pass filter 72. The second analog low pass filter 72 generates the audio output representative of the music. The music is reproduced if the unique code bit

sequence is recognized, in order to provide the user with private audio reproduction of the music without interference from other users or wireless devices.

Independent Claim 30 also relates to a wireless digital audio system 10. Claim 30 includes limitations of Claim 19 and further includes at least one module (amplifier 74) to amplify the audio output generated by second analog low pass filter 72. Claim 30 further relates to a limitation directed to a receiver 50 that utilizes embedded fuzzy logic to enhance detection of the unique user code. A fuzzy logic detection sub-system 61 is described in detail in paragraphs [0013, 0014, and 0015] and depicted in FIG. 1.

Independent Claim 33 also relates to a wireless digital audio system 10, which includes at least one audio source 80, at least one digital audio transmitter 20 coupled to at least one audio source 80, and at least one audio receiver 50. The audio transmitter 20 and receiver 50 are configured for code division multiple access (CDMA) communication. (See paragraph [0009] and FIG. 1) The system 10 further includes at least one module adapted to audibly reproduce the processed CDMA signal. The system 10 provides a user with independent audio reproduction free of interference from other users or wireless devices. (See paragraphs [0005] and [0011])

Independent Claim 34 also relates to a wireless digital audio system 10. In addition to the limitations recited in Claim 33, Claim 34 also includes at least one module (amplifier 74) to amplify the processed CDMA signal generated.

Independent Claim 44 also relates to a wireless digital audio system 10. Claim 44 contains similar limitations as Claim 19. However, in Claim 44, if the unique user

code is recognized, the audio output is reproduced, the audio output having been wirelessly transmitted privately from at least one audio source to a user.

Independent Claim 51 is directed to a wireless digital audio transmitter 20. With reference to FIG. 2 and paragraph [0009], the transmitter 20 includes a first analog low pass filter 30, a digital low pass filter 34, an analog-to-digital converter 32, a first encoder 36, a second channel encoder 38, a digital modulator 42 and a differential phase shift key (DPSK) module 48. The transmitter 20 transmits a spread spectrum modulated signal such as a direct sequence spread spectrum (DSSS) modulated signal. (See paragraph [0014] of the Parent Application)

The transmitter 20 further includes a code generator 44 that may be used to create a unique user code. The unique user code generated is specifically associated with one wireless digital audio system user, and it is the only code recognized by the receiver 50 operated by a particular user. (See paragraph [0009]) For further noise immunity, a spread spectrum DPSK (differential phase shift key) transmitter or module is utilized.

Independent Claim 52 is directed to a wireless digital audio receiver 50. With reference to FIG. 3 and paragraph [0010], the receiver 50 includes a receiving antenna 52, a bandpass filter 54, a direct conversion receiver or module 56, a demodulator 62, a Viterbi decoder 66, a source decoder 68, a low pass filter 72, and a digital-to-analog converter 70. The spread spectrum modulated signal received by the receiving antenna 52 is processed by the spread spectrum direct conversion receiver or module 56 with a receiver code generator 60. The receiver code generator 60 may contain the same

unique wireless transmission of a signal code word that was transmitted by audio transmitter 20 specific to a particular user. If the unique user code bit sequence is recognized, an audio output representative of music is generated, corresponding to the decoded and converted digital signal. The audio output is wirelessly transmitted to a user for private listening of high fidelity audio music without interference from other users or wireless devices.

Independent Claim 53 also relates to a wireless digital audio receiver 50. Claim 53 contains similar limitations as Claim 52. However, Claim 53 includes an additional limitation directed to a fuzzy logic detector to enhance detection of the unique user code bit sequence. A fuzzy logic detection sub-system 61 is described in paragraphs [0013, 0014, and 0015] and shown in FIG. 1. FIG. 4 is an exemplary graph showing the utilization of an embedded fuzzy logic coding algorithm.

The system 10 further includes a battery-powered audio receiver headphone 50 which receives the CDMA communication signal and audibly reproduces the audio signal representative of music, if the unique user code is recognized, to provide a particular user with private audio reproduction free of interference from other users of other wireless digital audio music systems in a shared space.

Independent Claim 54 relates to a wireless digital audio system 10 comprising of an audio source 80 which provides a signal representative of music to a battery-powered transmitter 20 which transmits a code division multiple access (CDMA) communication signal, as seen in FIG. 1. The audio source 80 and the transmitter 20 are coupled via an analog headphone jack 82 and plug 22. The CDMA signal

transmitted by the transmitter contains the audio signal representative of music and an added unique user code, as described in paragraph [0009]

Independent Claim 55 also relates to a wireless digital audio system 10. However, in Claim 55, the transmitted CDMA signal has a differential phase shit keying (DPSK) modulated signal as well as an added unique user code for further noise immunity, as described in paragraph [0009].

Independent Claim 57 also relates to a wireless digital audio headset receiver 50. However, in Claim 57, the receiver 50 also includes a direct conversion module 56 configured to receive a wirelessly transmitted code division multiple access (CDMA) signal, the CDMA signal having an audio signal representative of both audio music and a unique user code.

The wireless digital audio headset receiver 50 further includes headset speakers 75 for privately reproducing the audio music to a user that is free of interference from other users of other wireless digital audio music systems in a shared space, if the unique user code is recognized. (See paragraphs [0003] and [0004])

Independent Claim 59 also relates to a wireless digital audio transmitter 20. However, in Claim 59, the wireless digital audio transmitter 20 is configured for CDMA communication. The wireless digital audio transmitter connects to the audio source through an existing headphone jack 82 and plug 22. The transmitter 20 also includes a means for receiving an audio output representative of music from the audio music source 80 which is embodied by a first analog low pass filter 30 receiving the audio output, a digital low pass filter 34, and an analog-to-digital converter (ADC) 32

operatively coupled between the filters 30 and 34 (shown in FIG. 2). The means for generating a unique user code is embodied by a code generator 44 (shown in FIG. 2.) The means for wirelessly transmitting a CDMA communication signal is embodied by a first encoder 36, a second channel encoder 38, a digital modulator 42, a DPSK transmitter 48, and a transmitting antenna 24 (shown in FIG. 2).

The summary above is intended to comply with 37 CFR § 41.37(c) (1) (v) and is not intended to limit the Claims through prosecution history estoppel in any way.

VI. GROUNDS OF REJECTION TO BE REVIEWED ON APPEAL

ISSUE 1:

Whether Claims 30, 53, 56, and 58 are unpatentable under 35 U.S.C. § 112, first paragraph, as failing to comply with the enablement requirement.

ISSUE 2:

Whether Claims 33 and 37 are unpatentable under 35 U.S.C. § 102(e) as being anticipated by Lindemann (U.S. Patent Application Publication 2004/0223622).

ISSUE 3:

Whether Claims 34 and 38 are unpatentable under 35 U.S.C. § 102(e) as being anticipated by Lindemann (U.S. Patent Application Publication 2004/0223622).

ISSUE 4:

Whether Claims 19-29 are unpatentable under 35 U.S.C. § 103(a) over Lindemann (U.S. Patent Application Publication 2004/0223622) in view of Sato (U.S. Patent No. 4,970,637).

ISSUE 5:

Whether Claims 30-32 are unpatentable under 35 U.S.C. § 103(a) over Lindemann (U.S. Patent Application Publication 2004/0223622) in view of Sato (U.S. Patent No. 4,970,637) and in further view of Benthin (U.S. Patent No. 5,790,595).

ISSUE 6:

Whether Claims 41 and 42 are unpatentable under 35 U.S.C. § 103(a) over Lindemann (U.S. Patent Application Publication 2004/0223622).

ISSUE 7:

Whether Claims 43-52 are unpatentable under 35 U.S.C. § 103(a) over Lindemann (U.S. Patent Application Publication 2004/0223622) in view of Sato (U.S. Patent No. 4,970,637).

ISSUE 8:

Whether Claim 53 is unpatentable under 35 U.S.C. § 103(a) over Lindemann (U.S. Patent Application Publication 2004/0223622) in view of Sato (U.S. Patent No. 4,970,637) and in further view of Benthin (U.S. Patent No. 5,790,595).

ISSUE 9:

Whether Claims 54, 55, 57 and 59 are unpatentable under 35 U.S.C. § 103(a) over Lavelle (U. S. Patent No. 6,678,892).

ISSUE 10:

Whether Claims 56 and 58 are unpatentable under 35 U.S.C. § 103(a) as being unpatentable over Lavelle (U. S. Patent No. 6,678,892) in view of Benthin (U. S. Patent No. 5,790,595).

VII. ARGUMENT

A. Introduction

Each Claim of this patent application is separately patentable and, upon issuance of a patent, will be entitled to a separate presumption of validity under 35 U.S.C. § 282. Hence, each of the Claims 19-34, 37, 38, and 41-59 should be considered individually in light of the arguments against the rejections.

B. Detailed Arguments

1. The rejection of Claims 30, 53, 56 and 58 under 35 U.S.C. § 112, first paragraph, as failing to comply with the enablement requirement, should be reversed.

The rejection of Claims 30, 53, 56 and 58 under 35 U.S.C. § 112, first paragraph, as failing to comply with the enablement requirement, should be reversed because all of the elements claimed in Claims 30, 53, 56 and 58 are supported in the originally-filed application.

Independent Claim 30 recites a combination including at least "one audio receiver configured for digital wireless communication ... utilizing embedded fuzzy logic to enhance detection of the unique user code in the transmitted DSSS signal."

Independent Claims 53 and dependent Claims 56, and 58 recite a combination including at least "a fuzzy logic detector to enhance detection of the unique user bit code sequence."

The MPEP provides that the written description requirement of 35 U.S.C. § 112, first paragraph may be satisfied:

> by describing the claimed invention with all of its limitations using such descriptive means as *words*, structures, *figures*, diagrams, and formulas that fully set forth the claimed invention ... [p]ossession may be shown in a variety of ways including ... *the disclosure of drawings*. (Internal citations omitted) (emphasis added). MPEP § 2163.02, 8th Ed. (Rev. 6), September, 2007.

It is clear from the cited section of the MPEP that Appellant can satisfy the written description requirement by having described the claimed invention through "words" or "drawings."

The Final Office Action dated July 23, 2007 ("FOA"), on page 3, states that:

> *Claim 30 recites that the receiver uses embedded fuzzy logic to enhance detection of the unique user code in said transmitted DSSS signal. However, Applicant's Fig. 1, shows a fuzzy logic detector (61) inside of the receiver unit (50). Receiver unit 50 is fully disclosed in Fig. 3, however, neither the specification, nor the drawings provide any detail as to how any fuzzy logic is used within the components of Fig. 3 to enhance detection of the unique user code. (Emphasis added)*

First, there are multiple paragraphs directed to fuzzy logic detection embedded in receiver 50. The Appellant directs the board's attention to the entire specification but specifically to paragraphs [0010], [0013] and [0014] for detailed support of the fuzzy logic detection[4]. Fuzzy logic is software that employs a set of rules. For example, in paragraph [0013], the specification states "fuzzy logic detection sub-system 61 may use a set of if-then rules." In paragraph [0014], the specification states:

> "Fuzzy logic detection sub-system 61 in battery powered headphone receiver 50 utilizes the if-then fuzzy set to map the received user code bits into two values: a low (0 or -1) and a high (1). Thus, as the user code bits are received, the "if" rules map the signal bit energy to the fuzzy set low value to some degree and to the fuzzy set high value to some degree. Figure 4 graphically shows that x-value -1 equals the maximum low bit energy representation and x-value 1 equals the maximum high bit energy representation. Due to additive noise, the user code bit

[4] All paragraphs referenced relate to the Instant Application, unless specified otherwise.

> energy may have some membership to low and high as represented in Figure 4. The if-part fuzzy set may determine if each bit in the user code, for every received packet, has a greater membership to a high bit representation or a low bit representation. The more a user code bit energy fits into the high or low representation, the closer its subsethood, i.e., a measure of the membership degree to which a set may be a subset of another set, may be to one."

Paragraph [0014] provides explicit details related to the "rules" and the evaluation of such "rules." More importantly, FIG. 4 is provided to graphically illustrate features of the fuzzy logic detection and the basis of the evaluation of the rules. In fact, FIG. 4 is described as a "graph showing utilization of an embedded fuzzy logic coding algorithm."

The fuzzy logic detection sub-system 61 is shown in FIG. 1 and described as being associated with receiver 50. As acknowledged on page 3 of the FOA, the rejection states "receiver unit 50 is fully disclosed in Fig. 3." Hence, in view of the disclosure and drawings, Appellant has described the fuzzy logic detection sub-system 61 and how it is used to enhance detection of the unique user code.

The Advisory Action dated October 11, 2007 ("Advisory Action"), page 2, states that:

> "... it is unclear whether this "fuzzy logic detector" is a method, software, logic, or hardware device. Furthermore, the specification leads one of ordinary skill in the art to believe that this "detector" is a hardware module of some sort. If it is to be a hardware module, it is not sufficiently shown in Figure 3, more specifically, it is not shown how this module interacts with the rest of the elements in Figure 3 (i.e. where is this detector located with respect to the other block elements?) Further, if it is just to be software, which Examiner does not necessarily interpret from a reading of the specification, which module in Figure 3. performs these operations. Neither of these elements are addressed by the specification and thus the claim cannot be enabled."

First, as the Examiner realizes, multiple methods of implementing a fuzzy logic detector exist. Therefore a person skilled in the art can use any method of

implementation to enable the claim. However, the more important issue is not how the fuzzy logic detector is implemented, but how the fuzzy logic algorithm operates and how the fuzzy logic detector interacts with the other elements, which is unmistakably described in the specification. Second, the algorithm for the fuzzy logic detector was clearly laid out in the specification, as shown above. As the specification demonstrates, the fuzzy logic detector is used in the receiver 50 and a person skilled in the art would recognize that the detector is used somewhere after receiving the signal and before audio output. Additionally, there is no requirement that the fuzzy logic detector be discussed specifically in the drawings so long as the specification makes note of it.

Appellant is unclear as to why the Examiner views "software" as being different from "logic." Nonetheless, "if-then" rules are implemented in software. Many programming languages provide "if-then" syntax. Appellant is also at a loss as to how or why a fuzzy logic detector would be considered "a method."

Appellant notes that a receiver is not just a hardware device such that it functions without any software. On the other hand, a receiver cannot be just software. Software must be executed by a processor having hardware properties. For example, a decoder is implemented using a set of instructions executed by a processor in accordance with various decoding standards or protocols.

In general, a receiver marries hardware components such as a housing, resistors, capacitors, antenna, processors, etc. with software to carryout the receiving functions including, but not limited to, CDMA reception and user code detection. As

disclosed by Appellant, the fuzzy logic detection is used to enhance the detection of a user code by the receiver, especially in a shared space environment with other users.

As to Claims 53, 56 and 58, they include similar claim limitations as Claim 30. Thus, the remarks set forth above in relation to embedded fuzzy logic, as applied to Claim 30, equally apply to Claims 53, 56 and 58.

Appellant therefore respectfully submits that Claims 30, 53, 56 and 58 clearly comply with the provisions of the first paragraph of 35 U.S.C. § 112. Therefore, the improper rejection of Claims 30, 53, 56 and 58 under 35 U.S.C. § 112, first paragraph, should be reversed.

2/3. The rejection of Claims 33, 34, 37 and 38 under 35 U.S.C. § 102(e), as being anticipated by Lindemann, should be reversed.

The rejection of Claims 33, 34, 37 and 38 under 35 U.S.C. § 102(e), as being anticipated by Lindemann, should be reversed because no *prima facie* case of anticipation has been established.

To establish a *prima facie* case of anticipation under 35 U.S.C. § 102(e), a single prior art reference must describe each and every element as set forth in the subject claim. *Verdegaal Bros. v. Union Oil Co. of California*, 814 F.2d 628, 631, 2 USPQ2d 1051, 1053 (Fed. Cir. 1987). "The identical invention must be shown in as complete detail as is contained in the ... claim." *Richardson v. Suzuki Motor Co.*, 868 F.2d 1226, 1236, 9 USPQ2d 1913, 1920 (Fed. Cir. 1989). Also see M.P.E.P. § 2131.

Independent Claims 33 and 34 recite "...at least one module adapted to audibly reproduce said processed CDMA signal, said CDMA communication configuration

providing a user with *independent audio reproduction free of interference from other users or wireless devices.*"

The above emphasized claim language is not taught or suggested by Lindemann. Lindemann relates to a digital wireless loudspeaker system, as specified in the title. Lindemann does not address reproduction that is interference free. Furthermore, Appellant observes that Lindemann does not mention interference or address the problem identified by Appellant and thus Appellant's solution to provide a user with independent audio reproduction free of interference from other users or wireless devices. Instead, Lindemann is directed to a digital wireless loudspeaker system and the delivery of signals to the speakers. Thus, Lindemann is not directed to a system capable of (1) providing a user with independent audio reproduction; and (2) reproduction free of interference from other users or wireless devices. By contrast, Lindemann simply provides a "loudspeaker system" where anyone can listen.

The Examiner asserts on page 4 and 5 of the FOA that

> "Lindemann discloses ... at least one audio transmitter and receiver being configured for code division multiple access (CDMA) communication (para 0075); and at least one module adapted to audibly reproduce said processed CDMA signal, said CDMA communication configuration providing a user with independent audio reproduction *free of interference from other users or wireless devices*. (Fig. 15A; the speakers reproduce, which receive the audio *without interference from the other speakers*)".

The Advisory Action further asserts on page 3 and 4 that "Element (2) is clearly met by virtue of the fact that it is CDMA reproduction. CDMA's entire goal is to minimize interference to provide a clear transmission. ... The fact that the speakers decode status messages to determine whether or not to produce music as well as what to

produce ... clearly meets the 'reproduction free of interference with other users or wireless devices.'"

A quick search of the patent application publication reveals that there is no mention of the term "interference" in Lindemann. It is well known by those skilled in the art that radio frequency (RF) interference originates from a source (i.e., transmitter) external to an RF signal path and produces undesired artifacts in the RF signal. Lindemann does not address speaker receiver interference due to many same transmitters sharing the same space [Lindemann, paragraph 0011 states "...signal generated by the single RF transmitter in the audio transmission device;" and paragraph 0058 states "...Signal generated by the single RF Transmitter."]. Thus, Lindemann does not address a key problem associated with transmitters using the CDMA technology.

It is well known by those skilled in the art that (a) a single transmitter transmits with equal power to multiple receivers; and (b) when multiple CDMA transmitters transmit simultaneously at equal power in a shared space, a receiver will receive more power from the nearest transmitter. Thus, when multiple transmitters are used, the nearest transmitter transmits a signal to a receiver that is of a higher order of magnitude, which is more detectable than a signal from a farther transmitter. Therefore, communications between a receiver and a transmitter, other than the transmitter closest to the receiver, become more difficult, if not impossible. Thus multiple Lindemann systems in proximity will have communication problems, which Lindemann does not address.

Lindemann's system differs from Appellant's invention in that all signals in Lindemann are intended to originate from the same stationary transmitter. As disclosed in paragraph 0013 of Lindemann:

> "When transmitting to several wireless loudspeakers simultaneously, as is the case with stereo or six channel surround sound, the sample rate clocks for the loudspeakers must be accurately synchronized to the data and with each other. Small delays from one speaker to the next would compromise the stereo or surround sound imaging of the sound. Even worse, variable delays would cause sounds to appear to move around in space. This invention solves the audio sample rate synchronization problem by generating the audio sample rate clock directly from the RF receiver symbol rate clock. For an RF system with continuously streaming data transmission, as is the case with digital audio in this invention, this clock is highly accurate and is guaranteed to be synchronized between RF receivers in multiple loudspeakers because it is generated at a single location in the RF transmitter."

In contrast, in Appellant's invention, signals originate from multiple CDMA transmitters. Since the signals originate from multiple CDMA transmitters, it is not feasible to have a common time reference for all the different wireless digital audio system transmissions that arrive at each associated CDMA headphone receivers. Because the transmissions from different CDMA transmitters propagate through different paths, they suffer variable time delays.

In connection with these variable time delays, it is well known by those skilled in the art that a CDMA receiver trying to detect the signal of the ith CDMA transmitter may be much closer in distance (typically resulting in smaller time delay) to, for example, the jth CDMA transmitter than the ith CDMA transmitter. When all transmission powers are equal, the signal from the jth CDMA transmitter will arrive at the CDMA receiver in question with a sufficiently larger power than that of the ith CDMA transmitter, causing incorrect decoding of the ith CDMA transmission.

The Advisory Action asserts that the element (2) (i.e. reproduction free of interference from other users or wireless devices) is clearly met by the virtue of the fact that it is CDMA reproduction. Unfortunately, this is not true. The interference problem lies in the difference in distance from a receiver to its desired transmitter and to the nearby transmitter. Unfortunately, the anti-jamming capacity (or interference avoidance capability) related to CDMA reproduction, as implied by the Advisory Action, is inadequate under most conditions to overcome the disparity seen in near-far signals. Appellant's invention minimizes the described interference, as addressed in detail in paragraphs [0011, 0015 and 0016] of the Parent Application. Therefore, just the mere use of "CDMA reproduction," as asserted on page 3 and 4 of the Advisory Action, does not meet the claim limitation recited in Independent Claims.

Accordingly, Lindemann does not disclose a "CDMA configuration providing a user with independent audio reproduction *free of interference from other users or wireless devices*", particularly when multiple Lindemann systems operate in proximity.

Additionally, dependent Claim 37 depends directly or indirectly from Independent Claim 33. Furthermore, dependent Claim 38 depends from Independent Claim 34. These dependent Claims contain all of the limitations of Independent Claims 33 or 34. Thus, any rejections under 35 U.S.C. §102(e) should be withdrawn by virtue of their dependency from Independent Claims 33 or 34.

Furthermore, Appellant believes that the dependent Claims 37 and 38 recite other features that are clearly lacking from the applied reference(s), and therefore these claims should be allowed.

At least because Lindemann does not disclose all of the recitations of Claims 33 and 34, a *prima facie* case of anticipation has not been established under 35 U.S.C. § 102(e). Therefore, the improper rejection of Claims 33, 34, 37 and 38 under 35 U.S.C. § 102(e) should be reversed.

4. The rejection of Claims 19-29 under 35 U.S.C. § 103(a), as being unpatentable over Lindemann in view of Sato, should be reversed.

The rejection of Claims 19-29 under 35 U.S.C. § 103(a) as being unpatentable over Lindemann in view of Sato, should be reversed because no *prima facie* case of obviousness has been established.

The examiner bears the initial burden of factually supporting any prima facie conclusion of obviousness. MPEP § 2142. To establish a *prima facie* case of obviousness under 35 U.S.C. § 103, two basic criteria must be met. First, the prior art references (or references when combined) must teach or suggest all the claim limitations. Second, there is evidence that the combination of prior art references would yield a predictable result to one of ordinary skill in the art. *KSR International Co. v. Teleflex Inc.,* 127 S.Ct. 1727 (2007). Rejections on obviousness cannot be sustained with mere conclusory statements; instead, there must be some articulated reasoning with some rational underpinning to support the legal conclusions of obviousness. *In re Kahn*, 441 F.3d 977, 988, 78 USPQ2d 1329, 1336 (Fed. Cir. 2006).

In determining the scope and content of the prior art, Office personnel must first obtain a thorough understanding of the invention disclosed and claimed in the application under examination by reading the specification, including the claims, to understand what the applicant has invented. See MPEP § 904 (8th edition, revision 5,

August 2006). The scope of the claimed invention must be clearly determined by giving the claims the "broadest reasonable interpretation consistent with the specification." See *Phillips v. AWH Corp.*, 415 F.3d 1303, 1316 (Fed. Cir. 2005) and MPEP § 2111. Ascertaining the differences between the claimed invention and the prior art requires interpreting the claim language and considering both the invention and the prior art as a whole. See MPEP §§ 2111, 2141.02.

As shown below, the examiner has not met his burden in establishing a *prima facie* case of obviousness.

Independent Claim 19 recites

> "...at least one module adapted to reproduce said audio output representative of said music, if the unique user bit code sequence is recognized, said audio output having been wirelessly transmitted from said at least one audio source to a user for private audio reproduction of said music without interference from other users or wireless devices."

In addition to Lindemann and Sato (U.S. Patent No. 4,970,637), the rejection of Claim 19 also relies upon Roberts, *et al.* (U.S. Patent 6,418,558), and Schotz (U.S. Patent 5,946,343). Furthermore, the rejection of Claim 19 relies on numerous statements that various claimed elements in Claim 19 are notorious.

In regards to Claim 19, in addition to the remarks set forth above in relation to Claims 33 and 34, neither Lindemann nor Sato teach "for private audio reproduction of said music" or "reproduce said audio output representative of said music, if the unique user code bit sequence is recognized." Hence any combination of Lindemann and Sato would not produce Appellant's invention. There is nothing in Lindemann, the primary reference, to provide a user with private audio reproduction, such as via headphones,

and without interference from other users or wireless devices. By contrast, Lindemann simply provides a "loudspeaker system" where anyone can listen; Lindemann does not address interference anywhere. The word "private" does not appear anywhere in Lindemann or Sato. Furthermore, "private" does not appear in Schotz '343 or Roberts '558.

Page 5 of the Advisory Action asserts that the purpose of Lindemann is to provide music to multiple zones. Appellant's invention, on the other hand, among other things, provides private listening of different music to multiple individuals sharing the same space (i.e. room/zone). Paragraph [0004] states:

> "There is a need for a battery powered simple connection system for existing music player devices (i.e., the previously mentioned music devices), to allow coded digital wireless transmission (using a battery powered transmitter) to a headphone receiver (using battery powered receiver headphones) that accomplishes private listening to multiple users occupying the same space without the use of wires."

Music devices enumerated in paragraph [0002] includes portable devices. Therefore, Lindemann does not disclose Appellant's system that provides different music privately to multiple individuals, where each user has her own receiver headphone and transmitter and is in the same shared space with other users.

Additionally, in Lindemann, the system does not transmit "music" with a "unique user code bit sequence." At best, Lindemann sends different channels (for stereo or surround sound) to different speakers and does not require "a unique user code bit sequence." Providing a "loudspeaker system" is at the heart of the Lindemann invention. By contrast Appellant's invention seeks to provide "private audio

reproduction." *"Private audio reproduction" is diametrically opposed to the operation of a "loudspeaker" system such as that of Lindemann.*

Appellant's wireless digital audio music system utilizes Code Division Multiple Access (CDMA) to allow multiple wireless digital audio music system users to simultaneously share a finite amount of radio frequency spectrum. Lindemann utilizes CDMA to multiplex the audio spectrum (Lindemann, paragraph 0075 states "This corresponds to a Code Division Multiple Access (CDMA) method of multiplexing the multiple audio channels."). Moreover, Schotz does not mention CDMA anywhere. Therefore, any combination of Lindemann, Sato, Schotz or Roberts would not produce the Appellant's invention.

On page 8 of the FOA, the Examiner appears to be equating "unique user code bit sequence," as claimed by Appellant, to "status messages ... in the transmission frames to control speaker attributes such as speaker group." The FOA also directs Appellant to paragraphs [0011] and [0064]. However, Lindemann provides channel selection for various combinations of speakers or groups of speakers such as to provide, in one embodiment, a "full complement of six surround sound speakers." Lindemann is essentially silent on the use of or the need for a "unique user code bit sequence."

On page 4 of the Advisory Action asserts that:

> "Regarding (2) the status messages are equated to the unique user code as stated by Applicant. To further clarify, para [0065] explicitly states that 'the status information contains commands to enable or disable a particular group of speakers.' Thus, if the status message enables a speaker (i.e. if the unique user code bit sequence is recognized [in this case if the enable command is

recognized]) the speaker reproduces music (i.e. reproduce said audio output representative of said music)."

However, the status message enables an individual speaker to select a particular channel from a set of channels contained in a single RF signal transmitted from a particular RF transmitter. (Lindemann, Claim 1 states "means for selecting *one* of the audio channels *from the* RF signal for broadcast" (emphasis added); Lindemann Claim 14 states "transmitting *an* RF signal *including at least two audio channels* of transmission data." (emphasis added)). Lindemann does not disclose the use of unique user codes to select between *multiple* RF signals. As discussed above, Lindemann does not discuss the problem of interference caused by multiple CDMA transmission sources in proximity of a CDMA receiver, and therefore does not discuss utilization and capture of unique user codes to select between multiple RF signals.

Dependent Claims 20-29 depend directly or indirectly from independent Claim 19. These dependent Claims contain all of the limitations of independent Claim 19, thus, any rejections under 35 U.S.C. § 103 should be withdrawn by virtue of their dependency from independent Claim 19.

Additionally, the Appellant believes that many of the dependent Claims 20-29 recite other features that are clearly lacking from the applied references, and therefore requests the Board to overturn these rejections.

As to Claim 28, Lindemann is directed to a "digital wireless loudspeaker system" with surround sound capability. Thus, modifying Lindemann to incorporate the teachings of Lindemann as modified by Sato (Schotz and/or Roberts) into a headphone set is basically using Appellant's own disclosure. Furthermore, such a modification

destroys the heart of Lindemann's invention (primary reference) and its intended operation, which is to disperse multiple speakers with speaker groups in different rooms as well as provide a "full complement of six surround sound speakers."

Accordingly, neither Lindemann nor Sato teach or suggest, alone or in combination, "private audio reproduction of said music" or "reproduce said audio output representative of said music, if the unique user code bit sequence is recognized," as recited in Claim 19. At least because neither Lindemann nor Sato, alone or in combination, teach or suggest all of the recitations of Claim 19, a *prima facie* case of obviousness under 35 U.S.C. § 103(a) has not been established. Therefore, Appellant respectfully requests the Board to reverse the improper rejection of Claims 19-29 under 35 U.S.C. § 103(a).

5. The rejection of Claims 30-32 under 35 U.S.C. § 103(a), as being unpatentable over Lindemann in view of Sato and in further view of Benthin, should be reversed.

The rejection of Claims 30-32 under 35 U.S.C. § 103(a), as being unpatentable over Lindemann in view of Sato, should be reversed because no *prima facie* case of obviousness has been established.

As shown below, the Examiner has not met his burden in establishing a *prima facie* case of obviousness. The case law and the MPEP requirements relating to obviousness are described above under the arguments relating to Issue 4 of this Appeal Brief.

Independent Claim 30 recites

> "...at least one audio receiver configured for digital wireless communication with said at least one audio transmitter and using embedded fuzzy logic to enhance detection of the unique user code in said transmitted DSSS signal ..."

Claim 30 includes similar Claim limitations as Claim 19. Thus, the remarks set forth above in relation to Lindemann, Sato and the combination of Lindemann and Sato, as applied to Claim 19 equally apply to Claim 30. Claim 30 includes additional limitations such as "using embedded fuzzy logic."

On Page 14, lines 8-10 of the FOA, the Examiner acknowledges that Lindemann, as modified by Sato, does not "disclose that the receiver utilizes embedded fuzzy logic to enhance detection of the unique user code in said transmitted DSSS signal." Thus, the rejection relies on Benthin. However, Benthin does not teach "*fuzzy logic to enhance detection of the unique user code.*"

In Appellant's invention, embedded fuzzy logic to enhance detection of the unique user code is useful. Lindemann does not require a unique user code. Since Lindemann does not require a unique user code, there is no need to use "embedded fuzzy logic to enhance detection of the unique user code in said transmitted DSSS signal". (FOA page 14, lines 15-17) Therefore, it would not be obvious, to one of ordinary skill in the art at the time the invention was made, to implement the soft decision components of Benthin for Lindemann in view of Sato.

Dependent Claims 31 and 32 depend directly or indirectly from Independent Claim 30. These dependent Claims contain all of the limitations of Independent Claim 30. Thus, any rejections under 35 U.S.C. § 103 should be reversed by virtue of their dependency from Independent Claim 30.

Appellant further believes that the dependent Claims 31-32 recite other features that are clearly lacking in the applied references, which is another ground for reversing these rejections.

As to Claim 32, Lindemann is directed to a "digital wireless loudspeaker system" with surround sound capability. Thus, modifying Lindemann to incorporate the teachings of Lindemann, as modified by Sato (Schotz and/or Roberts), into a headphone set is using Appellant's own disclosure. Furthermore, such a modification destroys the heart of Lindemann's invention (primary reference) and its intended operation, which is to disperse multiple speakers with speaker groups in different rooms as well as provide a "full complement of six surround sound speakers."

Accordingly, neither Lindemann, Sato nor Benthin teach or suggest, alone or in combination, "... at least one audio transmitter using embedded fuzzy logic to enhance detection of the unique user code in said transmitted DSSS signal ...", as recited in Claim 30. At least because neither Lindemann, Sato, nor Benthin, alone or in combination, teach or suggest all of the recitations of Claim 30, a *prima facie* case of obviousness under 35 U.S.C. § 103(a) has not been established. Therefore, the improper rejection of Claims 30-32 under 35 U.S.C. § 103(a) should be reversed.

6. The rejection of Claims 41 and 42 under 35 U.S.C. § 103(a), as being unpatentable over Lindemann, should be reversed.

The rejection of Claims 41 and 42 under 35 U.S.C. § 103(a), as being unpatentable over Lindemann, should be reversed because no *prima facie* case of obviousness has been established.

As shown below, the Examiner has not met his burden in establishing a *prima facie* case of obviousness. The case law and the MPEP requirements relating to obviousness are described above under the arguments relating to Issue 4 of this Appeal Brief.

Dependent Claims 41 and 42 depend directly or indirectly from Independent Claims 33 and 34. These dependent Claims contain all of the limitations of Independent Claims 33 and 34. Therefore, any rejections under 35 U.S.C. §103 should be withdrawn by virtue of their dependency from Independent Claims 33 and 34.

Lindemann, as modified by the Examiner, does not teach the deficiencies described in relation to Independent Claims 33 and 34. Hence, Lindemann, as modified, does not teach the claimed invention since Lindemann, as modified, does not teach all the limitations of the base Claims (33 and 34) from which Claims 41 and 42 depend.

Additionally, there is no suggestion to make the transmitter of Lindemann "battery-powered," as claimed in Claims 41 and 42.

In view of the above remarks, the rejection of Claims 41 and 42 under 35 U.S.C. § 103(a) as being unpatentable by Lindemann should be reversed.

Accordingly, Lindemann does not teach or suggest the claimed invention as recited in Claims 41 and 42. At least because Lindemann does not teach or suggest all of the recitations of Claims 41 and 42, a *prima facie* case of obviousness under 35 U.S.C. § 103(a) has not been established. Therefore, the improper rejection of Claims 41 and 42 under 35 U.S.C. § 103(a) should be reversed.

7. The rejection of Claims 43-52 under 35 U.S.C. § 103(a), as being unpatentable over Lindemann in view of Sato, should be reversed.

The rejection of Claims 43-52 under 35 U.S.C. § 103(a) as being unpatentable over Lindemann in view of Sato should be reversed because no *prima facie* case of obviousness has been established.

As shown below, the Examiner has not met his burden in establishing a *prima facie* case of obviousness. The case law and the MPEP requirements relating to obviousness are described above under the arguments relating to Issue 4 of this Appeal Brief.

Independent Claims 43 and 44 contain similar language as Claim 19. Thus, the remarks set forth above in relation to Claim 19 equally apply to Claims 43 and 44.

Dependent Claims 45, 47, and 49 depend directly or indirectly from Independent Claim 43. Dependent Claims 46, 48, and 50 depend directly or indirectly from Independent Claim 44. These dependent Claims contain all of the limitations of their corresponding Independent Claim 43 or 44. Therefore, any rejections under 35 U.S.C. §103 should be withdrawn by virtue of their dependency thereof.

Appellant further believes that many of the dependent Claims 45-50 recite other features that are clearly lacking in the applied references, and therefore requests the Board to overturn these rejections.

Claim 51 positively recites "a code generator to add a unique user code to a modulator output, the modulator output including the audio output representative of said music." As remarked previously, Lindemann, the primary reference, neither requires a "unique user code" nor adds "the unique user code to a modulator output ... including

the audio output representative of said music." Hence, Lindemann does not have a "code generator to add a unique user code."

Moreover, neither Lindemann, nor Sato, adds "the unique user code to a modulator output ... including the audio output representative of said music." Hence any combination of these references still would not produce Appellant's claimed invention.

Claim 52 includes a positive recitation of a "unique user code bit sequence" and "for private listening of high fidelity audio music." The remarks set forth above in relation to Claim 19 equally apply to Claim 52. As previously mentioned, the heart of Lindemann's invention is a "loudspeaker system." The operations of a "loudspeaker system" are diametrically opposed to Appellant's invention to provide "private listening of ... music."

On page 13 of the FOA, Appellant observes that when rejecting Claims 43, 44 and 49-52, the Examiner relies on the rejections provided for 19, 27 and 30. However, Claim 30 is not rejected under Lindemann in view of Sato (Schotz and/or Roberts).

Nonetheless, neither Lindemann, nor Sato teach or suggest, alone or in combination, the claimed invention as recited in Claims 43-52. At least because neither Lindemann, Sato nor Benthin, alone or in combination, teach or suggest all of the recitations of Claims 43-52, a *prima facie* case of obviousness under 35 U.S.C. § 103(a) has not been established. Therefore, the improper rejection of Claims 43-52 under 35 U.S.C. § 103(a) should be reversed.

8. The rejection of Claim 53 under 35 U.S.C. § 103(a), as being unpatentable over Lindemann in view of Sato and in further view of Benthin, should be reversed.

The rejection of Claim 53 under 35 U.S.C. § 103(a), as being unpatentable over Lindemann in view of Sato and in further view of Benthin, should be reversed because no *prima facie* case of obviousness has been established.

As shown below, the Examiner has not met his burden in establishing a *prima facie* case of obviousness. The case law and the MPEP requirements relating to obviousness are described above under the arguments relating to Issue 4 of this Appeal Brief.

Claim 53 includes a positive recitation of a "unique user code bit sequence" and "a fuzzy logic detector to enhance detection of the unique user code bit sequence." The remarks set forth above in relation to Claim 30 equally apply to Claim 53.

As mentioned previously, Lindemann does not require a unique user code. In Appellant's invention, a fuzzy logic detector to enhance detection of the unique user code is useful. By contrast, since Lindemann does not require a unique user code, "a fuzzy logic detector to enhance detection of the unique user code" would not be useful. Additionally, arguments related to Benthin, as discussed above, are also applicable here.

Accordingly, neither Lindemann, Sato nor Benthin teach or suggest, alone or in combination, "unique user code bit sequence" and "a fuzzy logic detector to enhance detection of the unique user code bit sequence" as recited in Claim 53. At least because neither Lindemann, Sato nor Benthin, alone or in combination, teach or

suggest all of the recitations of Claim 53, a *prima facie* case of obviousness under 35 U.S.C. § 103(a) has not been established. Therefore, the improper rejection of Claim 53 under 35 U.S.C. § 103(a) should be reversed.

9. The rejection of Claims 54, 55, 57 and 59 under 35 U.S.C. § 103(a), as being unpatentable over Lavelle, should be reversed.

The rejection of Claims 54, 55, 57 and 59 under 35 U.S.C. § 103(a), as being unpatentable over Lavelle (U.S. Patent No. 6,678,892), should be reversed because no *prima facie* case of obviousness has been established.

As shown below, the Examiner has not met his burden in establishing a *prima facie* case of obviousness. The case law and the MPEP requirements relating to obviousness are described above under the arguments relating to Issue 4 of this Appeal Brief.

Claim 54 recites

> "...an audio source to provide an audio signal representative of music having an existing analog headphone plug; a battery-powered transmitter coupled to ... via said analog headphone plug ..."

The FOA relies on the wireless transmitter 510 in FIG. 1B for the battery powered transmitter of Appellant's Claim. The Examiner acknowledges in the FOA that Lavelle does not include headphone plugs. However, the Examiner states that "headphone plugs are notoriously well known in the art." The Examiner provides Appellant with an example of an iPod.

First, in Appellant's Claim, the connection of the audio source and the transmitter via a headphone plug/jack is positively recited. Appellant observes that the transmitter and receiver of Lavelle are intended to be installed in a vehicle and would generally be

permanent fixtures in the vehicle. The transmitter 510 in Lavelle, is arranged to communicate with wireless headphone sets via CDMA. Hence, in Lavelle, there is neither an existing analog headphone plug/jack, as claimed, nor a need for one. More importantly, Lavelle has no need for a headphone plug/jack since the original configuration of the primary reference (i.e. Lavelle) seeks to provide wireless communications in a vehicle (obviating the need for a headphone plug/jack to connect the headphone).

Nonetheless, even assuming that Lavelle may be modified with a headphone plug/jack, there is no teaching in Lavelle to further remove the transmitter 510 from the vehicle and couple this "transmitter" via a headphone plug/jack (which is not even present in Lavelle). Nowhere in Lavelle is such an arrangement described, especially since a headphone plug/jack does not exist in the first place. Hence, it appears that the Examiner is rejecting Appellant's invention in hindsight, using Appellant's own disclosure.

Appellant further observes that the transmitter 510 of Lavelle is battery powered by virtue of its installation in the vehicle and connection to the vehicle's battery source. Thus, for Lavelle's transmitter to utilize the charging (battery) system of a vehicle for power, it is necessary to connect the entertainment unit and transmitter by cable or cord to the charging (battery) system. Hence, removing the transmitter 510 from the vehicle's battery source destroys the transmitter's ability to use the vehicle's battery source relied upon in the Examiner's rejection on page 17 of the FOA.

Additionally, Lavelle uses a vehicle battery as a power source. Please note that vehicle batteries operate at significantly different voltages and amperage compared to the type of battery used in a portable music system. A typical vehicle battery operates at roughly 12.6 volts to 14.4 volts, while a battery in a portable music player typically operates at 3.7 volts to 6 volts. Furthermore, a vehicle battery is designed to output a fairly large amount of cranking amps, typically 400 to 1000 amps, upon startup to start the engine and cannot sustain its amperage level for more than a short period of time, typically 30 seconds. After the massive amperage provided at startup, the battery recedes to an output level that typically varies from 200 to 500 amps. On the other hand, a battery in a wireless music player is typically designed to constantly output several hundred *milli*-amps. Thus, Lavelle systems are designed to use a completely different battery type with completely a different function as compared to Appellant's portable music player battery. Moreover, and fairly obviously, vehicle batteries are designed for massive power drain, and thus are fairly bulky and heavy, with weight typically in the tens of pounds. Portable music player batteries are obviously designed to be portable, and thus are light and compact, with weight typically under a pound. Lavelle does not contemplate using a portable battery type, and thus Lavelle does not disclose the use of a portable battery-powered transmitter for use in a portable system.

Additionally, while Lavelle employs CDMA communications between the transmitter and headphone, Lavelle does not teach a unique user code, as claimed. In the CDMA embodiment of Lavelle, Walsh code generators and PN (pseudo random

number) generators are described. However, while these generators produce a code, such a code is designed to change. Thus, Lavelle codes are not "unique" user codes.

Appellant observes that Lavelle provides multiple headphone sets in a vehicle and intends to minimize interference between the headphone sets [Lavelle 6,678,892 column 6 lines 43 – 45 "...the wireless signals may be encoded to prevent interference between the two wireless headphone sets 152, 154."]. By contrast, Claim 54 recites "... CDMA communication ...provide a particular user with private audio reproduction free of interference from other users of other wireless digital audio music systems in a shared space." Each wireless digital audio music system consists of a CDMA transmitter and a CDMA receiver headphone; hence, interference between a particular CDMA receiver headphone of a wireless digital audio music system and the CDMA transmitters of other wireless digital audio music systems, in a shared space, is eliminated.

Lavelle's CDMA embodiment does not address interference between a headphone set and many transmitters simultaneously sharing the same space. Additionally, Lavelle also does not "provide a particular user with private audio reproduction free of interference from other users of other wireless digital audio music systems in a shared space," as claimed. Furthermore, Lavelle does not use a unique user code.

Page 7 of the Advisory Action asserts that:

> "The specific carrier frequency enables the device to tune to a particular program. This is equated with the unique user code. If this was not unique to each headphone device, there would be nothing to prevent interference or allow selection as shown in col. 7."

However, with regards to CDMA transmissions, Lavelle states "... the use of CDMA technology enables a single transmitter (i.e. wireless transmitter 510) to transmit all programs simultaneously, with a user being able to select the program he or she intends to hear via a selector ...". Lavelle further states "... the plurality of audio programs are then combined, superimposed onto *a* carrier frequency, and transmitted by the wireless transmitter 510 ..." (emphasis added). Appellant's invention uses multiple transmitters, where each transmitter outputs data packets in a stream. These data packets contain unique user codes to allow a receiver to determine whether or not to process a particular data packet stream. The unique user codes allow a receiver to pick and choose one of several data packet streams, instead of selecting just a particular program within a particular data packet stream. The unique user codes in Appellant's invention aid in allowing CDMA transmitters to operate in proximity to a CDMA receiver, as discussed above.

In Appellant's invention, both the transmitter and receiver of the wireless digital audio music system are battery-powered for use that includes portable audio sources so the wireless digital audio music system is without cable or cord to limit the mobility of a user operating a portable music player. Because the user is mobile, two or more wireless digital audio music systems may be in use at the same time in a shared space. In this event, a particular wireless digital audio music system (containing a transmitter and receiver) does not interfere with any other wireless digital audio music system (containing another transmitter and receiver) in a shared space.

As stated previously by Appellant, in the June 11, 2007 Response "It is well known by those skilled in the art that radio frequency (RF) interference originates from a source (i.e. transmitter) external to a RF signal path and produces undesired artifacts in the RF signal." Lavelle's CDMA system contains only one transmitter (Lavelle column 7 lines 26 – 28 states "It is to be appreciated that the use of CDMA technology enables a single transmitter (i.e., wireless transmitter 510) to transmit all programs simultaneously"). Because Lavelle's CDMA embodied system contains only one transmitter, it does not address headphone receiver interference due to many same transmitters simultaneously sharing the same space.

Appellant notes that a basic communication system consists of a transmitter, the channel and a receiver. The channel represents the propagating media or the electromagnetic path interconnecting the transmitter and the receiver. It is from this transmission channel that various anomalies and interference effects enter the system operation. Thus, although the design and fabrication of the transmitter and receiver portions are, for the most part, entirely in the hands of the communication engineer, it is often the properties of the channel that ultimately influence and dictate such procedures; knowledge of these channel properties is mandatory for successful engineering.

Lavelle's system differs from Appellant's invention because all signals in Lavelle originate from a single stationary transmitter. Lavelle at Column 7 lines 26 – 30 recites:

> "It is to be appreciated that the use of CDMA technology enables a single transmitter (i.e., wireless transmitter 510) to transmit all programs simultaneously"

The Advisory Action on page 7 asserts that Lavelle ". . . provides a user (i.e. one of the listeners of the headphones) with private audio reproduction (i.e. by virtue of the nature of headphones) free from interference from other users (i.e. headphones 152 and 154 have the interference minimized utilizing CDMA technology col. 7) in a shared space (i.e. interior of an automobile)." The Advisory Action misconstrues Appellant's invention. As stated earlier, Lavelle only utilizes a single transmitter. Therefore, Lavelle does not deal with interference that could result from multiple transmitters and multiple receivers, whereby each transmitter transmits to each respective receiver in a shared space. Additionally, the arguments advanced by Appellant under Issues 2/3 relating to CDMA reproduction interference are equally applicable here.

Lavelle never mentions or suggests that his CDMA design accounts for multiple similar CDMA transmitters operating in the same space. Hence, because this channel condition is not considered in Lavelle's design, Lavelle could not possibly teach a solution – namely, Appellant's solution where "Other code words from wireless digital audio systems 10 may appear as noise to a particular audio receiver 50." (Parent Application paragraph [0016]); "...utilizing timing and synchronization to capture the correct bit sequence embedded in the received spread spectrum signal." (Parent Application, paragraph [0015]); and "transmit an electromagnetic signal ... using approximately 100 milliwatts or less of power." (paragraph [0011] of the Parent Application).

Claims 55 and 59 contains similar language as Claim 54. Thus, the remarks above in relation to Claim 54 equally apply to Claims 55 and 59.

As to Claim 57, Lavelle or Lavelle, as modified, does not teach a "unique user code" and "free of interference from other users of other wireless digital audio music systems in a shared space." Previous arguments in this Appeal Brief relating to unique user code equally apply to Claims 57 and 59.

Accordingly, Lavelle does not teach or suggest "...an audio source to provide an audio signal representative of music having an existing analog headphone plug; a battery-powered transmitter coupled to ... via said analog headphone plug ..." as recited in Claims 54 and 55. Additionally, as discussed above, Lavelle also does not teach or suggest the limitations of Claims 57 and 59.

At least because Lavelle does not teach or suggest all of the recitations of Claims 54, 55, 57, and 59, a *prima facie* case of obviousness under 35 U.S.C. § 103(a) has not been established. Therefore, the improper rejection of Claims 54, 55, 57, and 59 under 35 U.S.C. § 103(a) should be reversed.

10. The rejection of Claims 56 and 58 under 35 U.S.C. § 103(a), as being unpatentable over Lavelle in view of Benthin, should be reversed.

The rejection of Claims 56 and 58 under 35 U.S.C. § 103(a) as being unpatentable over Lavelle in view of Benthin, should be reversed because no *prima facie* case of obviousness has been established.

As shown below, the Examiner has not met his burden in establishing a *prima facie* case of obviousness. The case law and the MPEP requirements relating to obviousness are described above under the arguments relating to Issue 4 of this Appeal Brief.

Claim 56, by virtue of its dependency, contains all of the limitations of Independent Claim 55, and therefore allowable. Additionally, it recites features that are clearly lacking from Lavelle. Lavelle does not teach a "unique user code." Thus, there is no motivation to modify Lavelle with a fuzzy logic detector to enhance the detection of the "unique user code."

Claim 58, by virtue of its dependency, contains all of the limitations of Independent Claim 57, and therefore allowable. Additionally, it recites features that are clearly lacking from Lavelle. Lavelle does not teach a "unique user code." Thus, there is no motivation to modify Lavelle with a fuzzy logic detector to enhance the detection of the "unique user code."

Additionally, arguments related to Benthin, as discussed above, are also applicable here.

Accordingly, Lavelle alone or in view of Benthin does not teach or suggest a "unique user code," as recited in Claims 56 and 58. At least because Lavelle alone or in view of Benthin does not teach or suggest all of the recitations of Claims 56 and 58, a *prima facie* case of obviousness under 35 U.S.C. § 103(a) has not been established. Therefore, the improper rejection of Claims 56 and 58 under 35 U.S.C. § 103(a) should be reversed.

C. Conclusion

For the foregoing reasons, Appellant respectfully requests the Honorable Board to reverse the Examiner's rejections and allow the pending Claims 19-34, 37, 38, and 41-59.

To the extent any extension of time under 37 C.F.R. § 1.136 is required to obtain entry of this Appeal Brief, Appellant hereby respectfully requests such extension. If there are any fees due under 37 C.F.R. §§ 1.16 or 1.17 that are not enclosed herewith, including any fees required for an extension of time under 37 C.F.R. § 1.136, the Commissioner is hereby authorized to charge such fees to our Deposit Account No. 50-4010.

Respectfully submitted,
THE PATEL LAW FIRM, P.C.

Natu J. Patel
USPTO Reg. No. 39,559

Date: December 22, 2007

NJP/lv/jc

THE PATEL LAW FIRM, P.C.
2532 Dupont Drive
Irvine, California 92612-1524
Business: (949) 955-1077
Facsimile: (949) 955-1877
NPatel@thePatelLawFirm.com

VIII. CLAIMS APPENDIX

Claims Appendix to Appeal Brief Under Rule 41.37(c)(1)(viii)

19. A wireless digital audio system, comprising:

at least one audio source to produce an audio output representative of music;

at least one digital audio transmitter operatively coupled to said at least one audio source, said at least one audio transmitter comprising:

a first analog low pass filter receiving the audio output from said at least one audio source;

a digital low pass filter;

an analog-to-digital converter (ADC) operatively coupled between said first analog and digital low pass filters;

a first encoder receiving output from said digital low pass filter and being configured to reduce intersymbol interference (ISI);

a second channel encoder operatively coupled to said first encoder and adapted to reduce transmission errors;

a digital modulator operatively coupled to said second channel encoder; and

a differential phase shift key (DPSK) module receiving output from said digital modulator and a unique user code bit sequence and being configured for direct sequence spread spectrum (DSSS) communication, said DPSK module transmitting a corresponding DSSS signal having said audio output representative of the music and the unique user code bit sequence;

at least one audio receiver configured for digital wireless communication with said at least one audio transmitter, said at least one audio receiver comprising:

a band pass filter (BPF) configured to process said transmitted DSSS signal;

a direct conversion module receiving output from said BPF and being configured to capture the unique user code bit sequence embedded in said processed DSSS signal;

a digital demodulator adapted to process an output from said direct conversion module;

a Viterbi decoder operatively coupled to said digital demodulator and generating a corresponding digital output;

a source decoder processing said digital output from said Viterbi decoder and being configured to decode the digital signal encoded by said first encoder;

a second analog low pass filter; and

a digital-to-analog converter (DAC) operatively coupled between said source decoder and said second analog low pass filter, said second analog low pass filter generating the audio output representative of the music; and

at least one module adapted to reproduce said audio output representative of said music, if the unique user code bit sequence is recognized, said audio output having been wirelessly transmitted from said at least one audio source to a user for private audio reproduction of said music without interference from other users or wireless devices.

20. The wireless digital audio system of Claim 19, wherein said BPF is a wideband BPF.

21. The wireless digital audio system of Claim 19, wherein said modulator is a 64-Ary modulator.

22. The wireless digital audio system of Claim 19, wherein said demodulator is a 64-Ary demodulator.

23. The wireless digital audio system of Claim 19, wherein said generated audio output is in the approximate range of 20 Hz to 20 kHz.

24. The wireless digital audio system of Claim 19, wherein said spread spectrum signal is transmitted at about 2.4 GHz via an omni-directional antenna.

25. The wireless digital audio system of Claim 24, wherein said spread

spectrum signal is transmitted at a power of about 100 milliwatts or less.

26. The wireless digital audio system of Claim 19, wherein said ADC is a 4-bit analog-to-digital converter.

27. The wireless digital audio system of Claim 19, wherein said at least one audio source is a portable audio player.

28. The wireless digital audio system of Claim 19, wherein said at least one audio reproducing module includes at least one headphone speaker.

29. The wireless digital audio system of Claim 19, wherein said BPF is operatively coupled to at least one antenna configured to receive said transmitted DSSS signal.

30. A wireless digital audio system, comprising:

at least one audio source;

at least one digital audio transmitter operatively coupled to said at least one audio source, said at least one audio transmitter comprising:

a first analog low pass filter receiving audio output from said at least one audio source;

a digital low pass filter;

an analog-to-digital converter (ADC) operatively coupled between said first analog and digital low pass filters;

a first encoder receiving output from said digital low pass filter and being configured to reduce intersymbol interference (ISI);

a second channel encoder operatively coupled to said first encoder and adapted to reduce transmission errors;

a digital modulator operatively coupled to said second channel encoder; and

a differential phase shift key (DPSK) module receiving output from said digital

modulator and a unique user code and being configured for direct sequence spread spectrum (DSSS) communication, said DPSK module transmitting a corresponding DSSS signal;

at least one audio receiver configured for digital wireless communication with said at least one audio transmitter and utilizing embedded fuzzy logic to enhance detection of the unique user code in said transmitted DSSS signal, said at least one audio receiver comprising:

a band pass filter (BPF) configured to process said transmitted DSSS signal;

a direct conversion module receiving output from said BPF and being configured to capture the correct bit sequence embedded in said processed DSSS signal;

a digital demodulator adapted to process output from said direct conversion module;

a Viterbi decoder operatively coupled to said digital demodulator and generating a corresponding digital output;

a source decoder processing said digital output from said Viterbi decoder and being configured to decode the digital signal encoded by said first encoder;

a second analog low pass filter; and

a digital-to-analog converter (DAC) operatively coupled between said source decoder and said second analog low pass filter, said second analog low pass filter generating the audio output;

at least one module adapted to amplify said generated audio output; and

at least one module adapted to reproduce said amplified audio output, if the unique user code is recognized, said audio output having been wirelessly transmitted from said at least one audio source to a user privately without interference from other users or wireless devices.

31. The wireless digital audio system of Claim 30, wherein said at least one audio amplifying module includes at least one power amplifier, said at least one power amplifier being configured to provide a low distortion audio signal output.

32. The wireless digital audio system of Claim 31, wherein said at least one audio reproducing module includes at least one headphone speaker, said at least one headphone speaker receiving said low distortion audio signal output from said at least one power amplifier.

33. A wireless digital audio system, comprising:

at least one audio source;

at least one digital audio transmitter operatively coupled to said at least one audio source;

at least one audio receiver adapted for digital wireless communication with said at least one audio transmitter, each of said at least one digital audio transmitter and receiver being configured for code division multiple access (CDMA) communication; and

at least one module adapted to audibly reproduce said processed CDMA signal, said CDMA communication configuration providing a user with independent audio reproduction free of interference from other users or wireless devices.

34. A wireless digital audio system, comprising:

at least one audio source;

at least one digital audio transmitter operatively coupled to said at least one audio source;

at least one audio receiver adapted for digital wireless communication with said at least one audio transmitter, each of said at least one digital audio transmitter and receiver being configured for code division multiple access (CDMA) communication;

at least one module adapted to amplify said processed CDMA signal; and

at least one module adapted to audibly reproduce said amplified signal, said CDMA communication configuration providing a user with independent audio reproduction free of interference from other users or wireless devices.

37. The wireless digital audio system of Claim 33, wherein said at least one audio source provides analog output in the approximate range of 20 Hz to 20 kHz.

38. The wireless digital audio system of Claim 34, wherein said at least one audio source provides analog output in the approximate range of 20 Hz to 20 kHz.

41. The wireless digital audio system of Claim 33, wherein at least one of said digital audio transmitter and receiver is battery-powered.

42. The wireless digital audio system of Claim 34, wherein at least one of said digital audio transmitter and receiver is battery-powered.

43. A wireless digital audio system, comprising:

at least one audio source;

at least one digital audio transmitter operatively coupled to said at least one audio source, said at least one audio transmitter comprising:

a first analog low pass filter receiving audio output representative of music from said at least one audio source;

a digital low pass filter;

an analog-to-digital converter (ADC) operatively coupled between said first analog and digital low pass filters;

a first encoder receiving output from said digital low pass filter and being configured to reduce intersymbol interference (ISI);

a second channel encoder operatively coupled to said first encoder and adapted to reduce transmission errors;

a digital modulator operatively coupled to said second channel encoder; and

a differential phase shift key (DPSK) module receiving output from said digital modulator and a unique user code bit sequence and being configured for direct sequence spread spectrum (DSSS) communication, said DPSK module transmitting a corresponding DSSS signal;

at least one audio receiver configured for digital wireless communication with said at least one audio transmitter, said at least one audio receiver comprising:

a band pass filter (BPF) configured to process said transmitted DSSS signal;

a direct conversion module receiving output from said BPF and being configured to capture the the unique user code bit sequence embedded in said processed DSSS signal;

a digital demodulator adapted to process output from said direct conversion module;

a Viterbi decoder operatively coupled to said digital demodulator and generating a corresponding digital output;

a source decoder processing said digital output from said Viterbi decoder and being configured to decode the digital signal encoded by said first encoder;

a second analog low pass filter; and

a digital-to-analog converter (DAC) operatively coupled between said source decoder and said second analog low pass filter, said second analog low pass filter generating the audio output representative of said music; and

at least one module adapted to reproduce said audio output, if the unique user code bit sequence is recognized, said audio output representative of said music having been wirelessly transmitted from said at least one audio source to a user privately without interference from other users or wireless devices.

44. A wireless digital audio system, comprising:

at least one audio source;

at least one digital audio transmitter operatively coupled to said at least one audio source, said at least one audio transmitter comprising:

a first analog low pass filter receiving audio output representative of music from said at least one audio source;

a digital low pass filter;

an analog-to-digital converter (ADC) operatively coupled between said first analog and digital low pass filters;

a first encoder receiving output from said digital low pass filter and being configured to reduce intersymbol interference (ISI);

a second channel encoder operatively coupled to said first encoder and adapted to reduce transmission errors;

a digital modulator operatively coupled to said second channel encoder; and

a differential phase shift key (DPSK) module receiving output from said digital modulator and a unique user code and being configured for direct sequence spread spectrum (DSSS) communication, said DPSK module transmitting a corresponding DSSS signal;

at least one audio receiver configured for digital wireless communication with said at least one audio transmitter, said at least one audio receiver comprising:

a band pass filter (BPF) configured to process said transmitted DSSS signal;

a direct conversion module receiving output from said BPF and being configured to capture the unique user code embedded in said processed DSSS signal;

a digital demodulator adapted to process output from said direct conversion module;

a Viterbi decoder operatively coupled to said digital demodulator and generating a corresponding digital output;

a source decoder processing said digital output from said Viterbi decoder and being configured to decode the digital signal encoded by said first encoder;

a second analog low pass filter; and

a digital-to-analog converter (DAC) operatively coupled between said source decoder and said second analog low pass filter, said second analog low pass filter generating the audio output representative of the music;

at least one module adapted to amplify said generated audio output; and

at least one module adapted to reproduce said amplified audio output, if the unique user code is recognized, said audio output having been wirelessly transmitted from said at least one audio source to a user privately.

45. The wireless digital audio system of Claim 43, wherein said at least one audio source provides analog output in the approximate range of 20 Hz to 20 kHz.

46. The wireless digital audio system of Claim 44, wherein said at least one audio source provides analog output in the approximate range of 20 Hz to 20 kHz.

47. The wireless digital audio system of Claim 43, wherein at least one of said digital audio transmitter and receiver is battery-powered.

48. The wireless digital audio system of Claim 44, wherein at least one of said digital audio transmitter and receiver is battery-powered.

49. The wireless digital audio system of Claim 43, wherein said at least one audio source is a portable music player.

50. The wireless digital audio system of Claim 44, wherein said at least one audio source is a portable music player.

51. A wireless digital audio transmitter, comprising:

a first analog low pass filter receiving audio output representative of music from at least one audio source;

a digital low pass filter;

an analog-to-digital converter (ADC) operatively coupled between said first analog and digital low pass filters;

a first encoder receiving output from said digital low pass filter and being configured to reduce intersymbol interference (ISI);

a second channel encoder operatively coupled to said first encoder and adapted to reduce transmission errors;

a digital modulator operatively coupled to said second channel encoder;

a code generator to add a unique user code to a modulator output, the modulator output including the audio output representative of said music; and

a differential phase shift key (DPSK) module receiving the modulator output from said digital modulator and the unique user code and being configured for direct

sequence spread spectrum (DSSS) communication, said DPSK module transmitting a corresponding DSSS signal.

52. A wireless digital audio receiver, comprising:

a band pass filter (BPF) configured to process a transmitted DSSS signal;

a direct conversion module receiving output from said BPF and being configured to capture a unique user code bit sequence embedded in said processed DSSS signal;

a digital demodulator adapted to process output from said direct conversion module;

a Viterbi decoder operatively coupled to said digital demodulator and generating a corresponding digital output;

a source decoder receiving said digital output from said Viterbi decoder and being configured to decode the digital signal encoded therein;

a second analog low pass filter; and

a digital-to-analog converter (DAC) operatively coupled between said source decoder and said second analog low pass filter, said second analog low pass filter generating an audio output representative of music, if the unique user code bit sequence is recognized, corresponding to the decoded and converted digital signal, said audio output having been wirelessly transmitted to a user for private listening of high fidelity audio music without interference from other users or wireless devices.

53. A wireless digital audio receiver, comprising:

a band pass filter (BPF) configured to process a transmitted DSSS signal;

a direct conversion module receiving output from said BPF and being configured to capture a unique user code bit sequence embedded in said processed DSSS signal;

a fuzzy logic detector to enhance detection of the unique user code bit sequence;

a digital demodulator adapted to process output from said direct conversion module;

a Viterbi decoder operatively coupled to said digital demodulator and generating a corresponding digital output;

a source decoder receiving said digital output from said Viterbi decoder and being configured to decode the digital signal encoded therein;

a second analog low pass filter; and

a digital-to-analog converter (DAC) operatively coupled between said source decoder and said second analog low pass filter, said second analog low pass filter generating an audio output, if the unique user code bit sequence is recognized, corresponding to the decoded and converted digital signal, said audio output having been wirelessly transmitted to a user privately without interference from other users or wireless devices.

54. A wireless digital audio system, comprising:

an audio source to provide an audio signal representative of music having an existing analog headphone plug;

a battery-powered transmitter coupled to said at least one audio source via said analog headphone plug and operative to transmit a code division multiple access (CDMA) communication signal having said audio signal representative of said music and an added unique user code;

a battery-powered audio receiver headphone set operative to receive the CDMA communication signal and audibly reproduce said audio signal representative of said music, if the unique user code is recognized, to provide a particular user with private audio reproduction free of interference from other users of other wireless digital audio music systems in a shared space.

55. A wireless digital audio system, comprising:

an audio source to provide an audio signal representative of music having an existing analog headphone plug;

a battery-powered transmitter coupled to said at least one audio source via said analog headphone plug and operative to transmit a code division multiple access (CDMA) communication signal having a differential phase shift keying (DPSK) modulated signal of said audio signal representative of said music and an added unique

user code;

an audio receiver headphone set operative to receive the CDMA communication signal and audibly reproduce said audio signal, if the unique user code is recognized, to provide a user with private audio reproduction of said music free of interference from other users of other wireless digital audio music systems in a shared space.

56. The system of Claim 55, said audio receiver headphone further comprising a fuzzy logic detector to enhance detection of the unique user code.

57. A wireless digital audio headset receiver, comprising:

a direct conversion module configured to receive a wirelessly transmitted code division multiple access (CDMA) signal having an audio signal representative of audio music and a unique user code; and

headset speakers for privately reproducing said audio music to a user, if the unique user code is recognized, and free of interference from other users of other wireless digital audio music systems in a shared space.

58. The receiver of Claim 57, further comprising a fuzzy logic detector to enhance detection of the unique user code.

59. A code division multiple access (CDMA) battery-powered transmitter comprising:

a jack to connect to an existing analog headphone plug of an audio source;

means for receiving an audio output representative of music from the audio music source;

means for generating a unique user code; and

means for wirelessly transmitting a CDMA communication signal having said audio output representative of said music and said unique user code to a wireless headphone receiver.

IX. EVIDENCE APPENDIX

NONE

SONY EXHIBIT 1005 – 0893

X. RELATED PROCEEDINGS APPENDIX

NONE

SONY EXHIBIT 1005 – 0894

Electronic Patent Application Fee Transmittal

Application Number:	10648012
Filing Date:	26-Aug-2003
Title of Invention:	WIRELESS DIGITAL AUDIO SYSTEM
First Named Inventor/Applicant Name:	C. Earl Woolfork
Filer:	Natu J. Patel
Attorney Docket Number:	W003-4000

Filed as Small Entity

Utility Filing Fees

Description	Fee Code	Quantity	Amount	Sub-Total in USD($)
Basic Filing:				
Pages:				
Claims:				
Miscellaneous-Filing:				
Petition:				
Patent-Appeals-and-Interference:				
Filing a brief in support of an appeal	2402	1	255	255
Post-Allowance-and-Post-Issuance:				
Extension-of-Time:				

Description	Fee Code	Quantity	Amount	Sub-Total in USD($)
Miscellaneous:				
		Total in USD ($)		**255**

Electronic Acknowledgement Receipt

EFS ID:	2636416
Application Number:	10648012
International Application Number:	
Confirmation Number:	3337
Title of Invention:	WIRELESS DIGITAL AUDIO SYSTEM
First Named Inventor/Applicant Name:	C. Earl Woolfork
Customer Number:	48162
Filer:	Natu J. Patel
Filer Authorized By:	
Attorney Docket Number:	W003-4000
Receipt Date:	22-DEC-2007
Filing Date:	26-AUG-2003
Time Stamp:	18:12:04
Application Type:	Utility under 35 USC 111(a)

Payment information:

Submitted with Payment	yes
Payment Type	Credit Card
Payment was successfully received in RAM	$255
RAM confirmation Number	5618
Deposit Account	504010
Authorized User	PATEL,NATU J.

The Director of the USPTO is hereby authorized to charge indicated fees and credit any overpayment as follows:

Charge any Additional Fees required under 37 C.F.R. Section 1.17 (Patent application and reexamination processing fees)

Charge any Additional Fees required under 37 C.F.R. Section 1.21 (Miscellaneous fees and charges)

File Listing:

Document Number	Document Description	File Name	File Size(Bytes) /Message Digest	Multi Part /.zip	Pages (if appl.)
1	Miscellaneous Incoming Letter	TransmittalForm.pdf	54654 54db240410c19d2230dbfaa279d45b80597e6ad7	no	1
Warnings:					
Information:					
2	Appeal Brief Filed	AppealBrief.pdf	2374317 9b40dfc8e6f7fd7019e1efbc821c7114b7b5d527	no	60
Warnings:					
Information:					
3	Fee Worksheet (PTO-06)	fee-info.pdf	8131 0c5c7790d286eb984b4d05fa1d594252214a560f	no	2
Warnings:					
Information:					
		Total Files Size (in bytes):	2437102		

This Acknowledgement Receipt evidences receipt on the noted date by the USPTO of the indicated documents, characterized by the applicant, and including page counts, where applicable. It serves as evidence of receipt similar to a Post Card, as described in MPEP 503.

New Applications Under 35 U.S.C. 111
If a new application is being filed and the application includes the necessary components for a filing date (see 37 CFR 1.53(b)-(d) and MPEP 506), a Filing Receipt (37 CFR 1.54) will be issued in due course and the date shown on this Acknowledgement Receipt will establish the filing date of the application.

National Stage of an International Application under 35 U.S.C. 371
If a timely submission to enter the national stage of an international application is compliant with the conditions of 35 U.S.C. 371 and other applicable requirements a Form PCT/DO/EO/903 indicating acceptance of the application as a national stage submission under 35 U.S.C. 371 will be issued in addition to the Filing Receipt, in due course.

New International Application Filed with the USPTO as a Receiving Office
If a new international application is being filed and the international application includes the necessary components for an international filing date (see PCT Article 11 and MPEP 1810), a Notification of the International Application Number and of the International Filing Date (Form PCT/RO/105) will be issued in due course, subject to prescriptions concerning national security, and the date shown on this Acknowledgement Receipt will establish the international filing date of the application.

PTO/SB/21 (09-04)
Approved for use through 07/31/2006. OMB 0651-0031
U.S. Patent and Trademark Office; U.S. DEPARTMENT OF COMMERCE
Under the Paperwork Reduction Act of 1995, no persons are required to respond to a collection of information unless it displays a valid OMB control number.

TRANSMITTAL FORM

(to be used for all correspondence after initial filing)

Total Number of Pages in This Submission

Application Number	10/648,012
Filing Date	August 26, 2003
First Named Inventor	WOOLFORK, C. Earl
Art Unit	2615
Examiner Name	FLANDERS, Andrew C.
Attorney Docket Number	W003-4000

ENCLOSURES *(Check all that apply)*

- ☐ Fee Transmittal Form
  - ☐ Fee Attached
- ☐ Amendment/Reply
  - ☐ After Final
  - ☐ Affidavits/declaration(s)
- ☐ Extension of Time Request
- ☐ Express Abandonment Request
- ☐ Information Disclosure Statement
- ☐ Certified Copy of Priority Document(s)
- ☐ Reply to Missing Parts/ Incomplete Application
  - ☐ Reply to Missing Parts under 37 CFR 1.52 or 1.53
- ☐ Drawing(s)
- ☐ Licensing-related Papers
- ☐ Petition
- ☐ Petition to Convert to a Provisional Application
- ☐ Power of Attorney, Revocation Change of Correspondence Address
- ☐ Terminal Disclaimer
- ☐ Request for Refund
- ☐ CD, Number of CD(s) _____
  - ☐ Landscape Table on CD
- ☐ After Allowance Communication to TC
- ☐ Appeal Communication to Board of Appeals and Interferences
- ☑ Appeal Communication to TC **(Appeal Notice, Brief, Reply Brief)**
- ☐ Proprietary Information
- ☐ Status Letter
- ☐ Other Enclosure(s) (please Identify below):

Remarks

Filed Electronically with the USPTO

SIGNATURE OF APPLICANT, ATTORNEY, OR AGENT

Firm Name	The Patel Law Firm, P.C.		
Signature	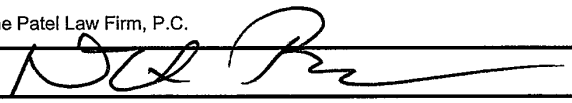		
Printed name	Natu J. Patel		
Date	December 22, 2007	Reg. No.	39,559

CERTIFICATE OF TRANSMISSION/MAILING

I hereby certify that this correspondence is being facsimile transmitted to the USPTO or deposited with the United States Postal Service with sufficient postage as first class mail in an envelope addressed to: Commissioner for Patents, P.O. Box 1450, Alexandria, VA 22313-1450 on the date shown below:

Signature			
Typed or printed name	Natu J. Patel	Date	July 10, 2006

This collection of information is required by 37 CFR 1.5. The information is required to obtain or retain a benefit by the public which is to file (and by the USPTO to process) an application. Confidentiality is governed by 35 U.S.C. 122 and 37 CFR 1.11 and1.14. This collection is estimated to 2 hours to complete, including gathering, preparing, and submitting the completed application form to the USPTO. Time will vary depending upon the individual case. Any comments on the amount of time you require to complete this form and/or suggestions for reducing this burden, should be sent to the Chief Information Officer, U.S. Patent and Trademark Office, U.S. Department of Commerce, P.O. Box 1450, Alexandria, VA 22313-1450. DO NOT SEND FEES OR COMPLETED FORMS TO THIS ADDRESS. **SEND TO: Commissioner for Patents, P.O. Box 1450, Alexandria, VA 22313-1450.**

If you need assistance in completing the form, call 1-800-PTO-9199 and select option 2.

UNITED STATES PATENT AND TRADEMARK OFFICE

UNITED STATES DEPARTMENT OF COMMERCE
United States Patent and Trademark Office
Address: COMMISSIONER FOR PATENTS
P.O. Box 1450
Alexandria, Virginia 22313-1450
www.uspto.gov

APPLICATION NO.	FILING DATE	FIRST NAMED INVENTOR	ATTORNEY DOCKET NO.	CONFIRMATION NO.
10/648,012	08/26/2003	C. Earl Woolfork	W003-4000	3337

48162 7590 03/13/2008
THE PATEL LAW FIRM, P.C.
2532 DUPONT DRIVE
IRVINE, CA 92612

EXAMINER	
FLANDERS, ANDREW C	
ART UNIT	PAPER NUMBER
2615	

MAIL DATE	DELIVERY MODE
03/13/2008	PAPER

Please find below and/or attached an Office communication concerning this application or proceeding.

The time period for reply, if any, is set in the attached communication.

UNITED STATES PATENT AND TRADEMARK OFFICE

Commissioner for Patents
United States Patent and Trademark Office
P.O. Box 1450
Alexandria, VA 22313-1450
www.uspto.gov

BEFORE THE BOARD OF PATENT APPEALS AND INTERFERENCES

Application Number: 10/648,012
Filing Date: August 26, 2003
Appellant(s): WOOLFORK, C. EARL

Natu J. Patel
For Appellant

EXAMINER'S ANSWER

This is in response to the appeal brief filed 22 December 2007 appealing from the Office action mailed 23 July 2007.

(1) Real Party in Interest

A statement identifying by name the real party in interest is contained in the brief.

(2) Related Appeals and Interferences

The examiner is not aware of any related appeals, interferences, or judicial proceedings which will directly affect or be directly affected by or have a bearing on the Board's decision in the pending appeal.

(3) Status of Claims

The statement of the status of claims contained in the brief is correct.

(4) Status of Amendments After Final

The appellant's statement of the status of amendments after final rejection contained in the brief is correct.

(5) Summary of Claimed Subject Matter

The summary of claimed subject matter contained in the brief is correct.

(6) Grounds of Rejection to be Reviewed on Appeal

The appellant's statement of the grounds of rejection to be reviewed on appeal is correct.

(7) Claims Appendix

The copy of the appealed claims contained in the Appendix to the brief is correct.

(8) Evidence Relied Upon

2004/0223622	Lindemann	11-2004
4,970,637	Sato	11-1990
6,418,558	Roberts	7-2000

5,946,343	Schotz	8-1999
5,790,595	Benthin	8-1998
6,678,892	Lavelle	1-2004

(9) Grounds of Rejection

The following ground(s) of rejection are applicable to the appealed claims:

Claim Rejections - 35 USC § 112

The following is a quotation of the first paragraph of 35 U.S.C. 112:

> The specification shall contain a written description of the invention, and of the manner and process of making and using it, in such full, clear, concise, and exact terms as to enable any person skilled in the art to which it pertains, or with which it is most nearly connected, to make and use the same and shall set forth the best mode contemplated by the inventor of carrying out his invention.

Claims 30, 53, 56 and 58 are rejected under 35 U.S.C. 112, first paragraph, as failing to comply with the enablement requirement. The claim(s) contains subject matter which was not described in the specification in such a way as to enable one skilled in the art to which it pertains, or with which it is most nearly connected, to make and/or use the invention. Claim 30 recites that the receiver uses embedded fuzzy logic to enhance detection of the unique user code in said transmitted DSSS signal. However, Applicant's Fig. 1, shows a fuzzy logic detector (61) inside of the receiver unit (50). Receiver unit 50 is fully disclosed in Fig. 3, however, neither the specification, nor the drawings provide any detail as to how any fuzzy logic is used within the components of Fig. 3 to enhance detection of the unique user code.

Claim Rejections - 35 USC § 102

The following is a quotation of the appropriate paragraphs of 35 U.S.C. 102 that form the basis for the rejections under this section made in this Office action:

> A person shall be entitled to a patent unless –
>
> (e) the invention was described in (1) an application for patent, published under section 122(b), by another filed in the United States before the invention by the applicant for patent or (2) a patent granted on an application for patent by another filed in the United States before the invention by the applicant for patent, except that an international application filed under the treaty defined in section 351(a) shall have the effects for purposes of this subsection of an application filed in the United States only if the international application designated the United States and was published under Article 21(2) of such treaty in the English language.

Claims 33, 34 and 37-38 are rejected under 35 U.S.C. 102(e) as being anticipated by Lindemann (U.S. Patent Application 2004/0223622).

Regarding **Claim 33**, Lindemann discloses:

A wireless digital audio system (Fig. 15B and Fig 17), comprising:

at least one audio source (Fig. 15B, 133, 134, 135);

at least one digital audio transmitter operatively coupled to said at least one audio source (Fig. 15B 131);

at least one audio receiver adapted for digital wireless communication with said at least one audio transmitter (Fig. 15B, 130 and Fig. 17 300)

each of said at least one digital audio transmitter and receiver being configured for code division multiple access (CDMA) communication (para 0075); and

at least one module adapted to audibly reproduce said processed CDMA signal, said CDMA communication configuration providing a user with independent audio

reproduction free of interference from other users or wireless devices (Fig. 15A; the speakers reproduce, which receive the audio without interference from the other speakers).

Regarding **Claim 34**, in addition to the elements stated in the rejection of claim 33, Lindemann further discloses:

At least one module adapted to amplify said processed CDMA signals (Fig. 17 element 301).

Regarding **Claims 37 and 38**, in addition to the elements stated above regarding claims 16 and 17, Lindemann further discloses:

audio source provides analog output in the approximate range of 20 Hz to 20 kHz (i.e. audible range produced by the tweeters and woofers in Fig. 1; provided by the audio source input)

Claim Rejections - 35 USC § 103

The following is a quotation of 35 U.S.C. 103(a) which forms the basis for all obviousness rejections set forth in this Office action:

> (a) A patent may not be obtained though the invention is not identically disclosed or described as set forth in section 102 of this title, if the differences between the subject matter sought to be patented and the prior art are such that the subject matter as a whole would have been obvious at the time the invention was made to a person having ordinary skill in the art to which said subject matter pertains. Patentability shall not be negatived by the manner in which the invention was made.

Claims 19 – 29 and 43 – 52 are rejected under 35 U.S.C. 103(a) as being unpatentable over Lindemann (U.S. Patent Application 2004/0223622) in view of Sato (U.S. Patent 4,970,637).

Regarding **Claim 19**, Lindemann discloses:

A wireless digital audio system (abstract) comprising:

at least one audio source to produce an audio output representative of music (Fig. 5 digital audio sample data);

at least one digital audio transmitter operatively coupled to said at least one audio source (Figs. 4 and 5).11

Lindemann fails to explicitly disclose that the digital audio transmitter comprises:

a first analog low pass filter receiving audio input from said at least one audio source;

a digital low pass filter;

an analog-to-digital converter (ADC) operatively coupled between said first analog and digital low pass filters.

However, Lindemann does disclose inputting a digital audio signal. This signal must have been converted from the analog domain at some point in time. Further, Lindemann discloses a loudspeaker system for a stereo, stereos are well known to include inputs such as microphones which input an analog audio signal. Filtering and converting from analog to digital and filtering again is notoriously well known in the art. For example, see Sato Fig.1.

Modifying Lindemann's transmitter to accept an analog input signal and convert it for transmission in the digital domain as taught by Sato discloses:

a first analog low pass filter receiving audio input from said at least one audio source (Sato Fig. 1which receives an analog input);

a digital low pass filter (Fig. 1 element 3; Max filter 3 operates on a digital signal and thus can be considered a 'digital low pass filter');

an analog-to-digital converter (ADC) operatively coupled between said first analog and digital low pass filters (Sato element 2).

It would have been obvious to one of ordinary skill in the art to modify Lindemann to accept an analog signal from a device such as a microphone and use a well known method such as the method taught by Sato. One would have been motivated to use the conversion technique to reduce noise and other errors.

The combination further

a first encoder configured to reduce intersymbol interference (ISI) (Fig. 5 element 502 which is a Reed Solomon Encoder and Interleaver; it is known in the art to configure Reed Solomon encoding/interleaving to reduce ISI as is shown by Roberts 6,418,558. Reducing ISI is a desirable feature to any digital transmission);

a second channel encoder operatively coupled to said first encoder and adapted to reduce transmission errors(Fig. 5 element 500; para 35 which indicates 500 is used for error correction);

a digital modulator operatively coupled to said second channel encoder (Fig. 4 element 405 which includes a 'modulator' and 'DSSS spreader' which indicates these are two separate elements);

a phase shift key a module receiving output from said digital modulator and a unique user code bit sequence (i.e. status messages are included in the transmission frames to control speaker attributes such as speaker group; para 11; and also see paras 64 on discussing channel selection) and being configured for direct sequence spread spectrum (DSSS)communication, said PSK module transmitting a corresponding DSSS signal having said audio output representative of the music and the unique user code bit sequence (Fig. 4 element 405, DSSS spreader using DQPSK or DBPSK; which outputs the music stream along with the status messages).

Lindemann does not explicitly disclose DPSK as claimed, however, DPSK is a notoriously well known alternative for DQPSK. When designing a transmitter, one must balance many various factors and depending on the characteristics desired (number of bits transferred, complexity and arrangement of the constellation), one may decide to implement a DPSK method in place of a DQPSK or DBPSK method.

The combination further discloses:

at least one audio receiver configured for digital wireless communication with said at least one audio transmitter (Fig. 3),

said at least one audio receiver comprising:

a band pass filter (BPF) configured to process said transmitted DSSS signal (BPF not shown in Fig. 3, para 57 of Lindemann);

a direct conversion module receiving output from said BPF and being configured to capture the unique user code bit sequence embedded in said processed DSSS signal (Fig. 3 301-304; directly converts the received signal to be ready for despreading);

a digital demodulator adapted to process output from said direct conversion module (Fig. 3 element 305);

a Viterbi decoder operatively coupled to said digital demodulator and generating a corresponding digital output (Fig. 8, 800);

a source decoder processing said digital output from said Viterbi decoder and being configured to decode the digital signal encoded by said first encoder (Fig. 8, 802).

The combination fails to explicitly disclose a second analog low pass filter. However, it would have been obvious to provide an analog filter for the desired purpose of smoothing the analog output after a digital to analog conversion. Low pass filtering after a D/A is notoriously well known in the art, see Schotz 5,946,343 Fig. 7B element 218.

The combination further discloses:

a digital-to-analog converter (DAC) operatively coupled between said source decoder and said second analog low pass filter (Fig. 10 element 1005; the analog filter of Schotz being provided after the D/A), said second analog low pass filter generating the audio output representative of the music (i.e. see the above discussion of the second low pass filter); and

at least one module adapted to reproduce said audio output, said audio output representative of said music, if the unique user code bit sequence is recognized (i.e.

enabling a specific group of speakers; para 66) having been wirelessly transmitted from said at least one audio source to a user for private audio reproduction of said music without interference form other users or wireless devices (Fig. 1, the speakers, which receive the audio without interference from the other speakers; further certain groups can be enabled as shown in para 66 and thus can be enjoyed without interference from other speakers and thus can be considered to be private).

Regarding **Claim 20**, in addition to the elements stated above regarding claim 19, the combination further discloses:

wherein said BPF is a wideband BPF (i.e. the band pass filter left out of Fig. 3; para 53; wideband being met by any band that could be considered 'wide'; i.e. a variety of well known configurations and choices available)

Regarding **Claim 21**, in addition to the elements stated above regarding claim 19, the combination further discloses:

wherein said modulator is a 64-Ary modulator (para 36, the modulator uses M-Ary, it is notoriously well known that M can be a variety of numbers depending on the transmission scheme, 64 being one possible obvious choice).

Regarding **Claim 22**, in addition to the elements stated above regarding claim 19, the combination further discloses:

wherein said modulator is a 64-Ary modulator (para 36, the modulator uses M-Ary, it is notoriously well known that M can be a variety of numbers depending on the transmission scheme, 64 being one possible obvious choice; thus the demodulator must operate accordingly)

Regarding **Claim 23**, in addition to the elements stated above regarding claim 19, the combination further discloses:

wherein said generated audio output is in the approximate range of 20Hz to 20kHz (i.e. audible range produced by the tweeters and woofers in Fig. 1).

Regarding **Claim 24**, in addition to the elements stated above regarding claim 19, the combination further discloses:

wherein said spread spectrum signal is transmitted at about 2.4GHz via an omni directional antennal (para 89; omni directional antenna being one of many well known and obvious choices for an antenna such as the one used by Fig. 1).

Regarding **Claim 25**, in addition to the elements stated above regarding claim 19, the combination fails to explicitly disclose the remission power. However, it is notoriously well known to adjust the transmission power in order to achieve a desired transmission distance. It is well known and obvious that in some modifications/variations, a given distance for Lindemann may only require 100 milliwatts.

Regarding **Claim 26**, in addition to the elements stated above regarding claim 19, the combination further discloses:

Wherein said ADC is a 4-bit analog-to-digital converter (the number of bits in the Lindemenn system is adjustable as is indicated by para 36-48; 4 being one possible obvious variation/modification).

Regarding **Claim 27**, in addition to the elements stated above regarding claim 19, the combination fails to explicitly disclose wherein said at least one audio source is a portable player. However, Examiner takes official notice that portable audio players, such as CD or MP3 players that produce an analog audio output are notoriously well known in the art. It would have been obvious to add one to the combination to be able to play portable media on a home entertainment center such as the one in the combination.

Regarding **Claim 28**, in addition to the elements stated above regarding claim 19, the combination fails to explicitly disclose wherein said at least one audio reproducing module includes at least one headphone speaker. However, the device does include a transducer/speaker. It is notoriously well known in the art that it is obvious to substitute a headphone/earphone device in place of a speaker in the field of audio reproduction. This is typically done for a variety of reasons, including minimizing disturbance caused to others.

Regarding **Claim 29**, in addition to the elements stated above regarding claim 19, the combination further discloses:

wherein said BPF is operatively coupled to at least one antenna configured to receive said transmitted DSSS signal (BPF not shown in Fig. 3, para 57 of Lindemann).

Regarding **Claims 43, 44 and 49 – 52**, claims 43, 44 and 49 - 52 are met by the rejections of claims 19, 27 and 30 as stated above, specifically in claim 30 the amplification module taught by Lindemann.

Regarding **Claims 45 and 46**, in addition to the elements stated above regarding claims 43 and 44, Lindemann further discloses:

audio source provides analog output in the approximate range of 20 Hz to 20 kHz (i.e. audible range produced by the tweeters and woofers in Fig. 1; provided by the audio source input).

Regarding **Claims 47 and 48**, in addition to the elements stated above regarding claims 43 and 44, Lindemann does not disclose wherein at least one of said digital audio transmitter and receiver is battery powered. However, it would have been obvious to one of ordinary skill in the art at the time of the invention to make the speaker reception portion of Lindemann battery powered. One would have been motivated to do

so to be able to place and use the speakers in an area where standard power supplies are unavailable (i.e. outdoors).

Claims 30 – 32 and 53 are rejected under 35 U.S.C. 103(a) as being unpatentable over Lindemann (U.S. Patent Application 2004/0223622) in view of Sato (U.S. Patent 4,970,637) in further view of Benthin (U.S. Patent 5,790,595)

Regarding **Claim 30**, in addition to the elements stated above regarding claim 19, the combination further discloses:

at least one module adapted to amplify said generated audio output (Fig. 10, 1007 and 1008).

The combination does not explicitly disclose that the receiver utilizes embedded fuzzy logic to enhance detection of the unique user code in said transmitted DSSS signal. However, it is well known to use a fuzzy logic detection system in a receiver such as Lindemann's. Benthin discloses a receiver that determines soft data bits (Figure i, function of Figure 2) for additional decoding performance in communication with the received, demodulated signal (output of II) from a spread spectrum demodulator (II) (col. 2, lines 6-31 col. 5, lines 10-25).

Applying this to the receiver of the combination meets the limitation of the receiver utilizing embedded fuzzy logic to enhance detection of the unique user code in said transmitted DSSS signal..

To one of ordinary skill in the art at the time the invention was made, it would have been obvious to implement the soft decision relevant components of Benethin as part of the encoding and signal reception parts of the system of the combination. The motivation behind such a modification would have been that the soft bit determining circuitry would have improved the reliability of the decision relating to the hard data bit equivalents of the received information, as is taught by Benethin.

Regarding **Claim 31**, in addition to the elements stated above regarding claim 30, the combination further discloses:

wherein said at least one audio amplifying module includes at least one power amplifier, said at least one power amplifier being configured to provide a low distortion audio signal output (Fig. 10, 1007 and 1008; para 73).

Regarding **Claim 32**, in addition to the elements stated above regarding claim 31, the combination further discloses:

wherein said at least one audio reproducing module includes at least one speaker, said at least one speaker receiving said low distortion audio signal output from said at least one power amplifier (Fig. 1, woofer and tweeter).

The combination fails to explicitly disclose that the speaker is a headphone speaker. However, it is notoriously well known in the art that it is obvious to substitute a headphone/earphone device in place of a speaker in the field of audio reproduction.

This is typically done for a variety of reasons, including minimizing disturbance caused to others.

Regarding **Claims 53**, claim 53 is met by the rejection of claim 30 as stated above.

Claims 41 and 42 are rejected under 35 U.S.C. 103(a) as being unpatentable over Lindemann (U.S. Patent Application Publication 2004/0223622).

Regarding **Claims 41 and 42**, in addition to the elements stated above regarding claims 33 and 34, Lindemann does not disclose wherein at least one of said digital audio transmitter and receiver is battery powered. However, it would have been obvious to one of ordinary skill in the art at the time of the invention to make the speaker reception portion of Lindemann battery powered. One would have been motivated to do so to be able to place and use the speakers in an area where standard power supplies are unavailable (i.e. outdoors).

Claims 54 and 55 are rejected under 35 U.S.C. 103(a) as being unpatentable over Lavelle (U.S. Patent 6,678,892).

Regarding **Claim 54**, Lavelle discloses:

A wireless digital audio system (Fig. 1B), comprising:

an audio source to provide an audio signal representative of music (i.e. various inputs; col. 4 lines 30 – 40);

a batter powered transmitter (i.e. 510, while not clearly stated, either the entertainment device contains integrated batteries or a vehicle requires a battery to power the various electronic components) coupled to said at least one audio source and operative to transmit a code division multiple access (CDMA) communication signal having said audio signal representative of said music and an added unique user code (i.e. transmitter 510 is connected to the various audio sources in Fig. 1B; it uses CDMA technology as shown in col. 7; the audio data is superimposed onto a carrier frequency and then tuned into using the device via separate selection; this frequency is considered to read upon the unique user code, as it is unique and can allow use by one headphone as desired);

a battery powered audio receiver headphone set operative to receive the CDMA communication signal and audibly reproduce said audio signal representative of said music (headphones 152 and 154), if the unique user code is recognized (i.e. the device is tuned to the specific carrier frequency), to provide a user with private audio reproduction free of interference form other users of other wireless digital audio music systems in a shared space (col. 7 lines 25 – 33).

Lavelle does not explicitly disclose the audio source coming from an existing analog headphone plug. However, audio sources with headphone plugs are notoriously well known in the art (i.e. iPods etc). Lavelle discloses that other devices may be employed in accordance with the invention; col. 4 lines 35 – 40. It would have been

obvious to allow an input for various devices such as iPods and other analog head phone devices. One would have been motivated to do so to make the device compatible with a widely used portable interface thus allowing user to enjoy their devices within their automobile.

Regarding **Claim 55**, in addition to the elements stated above regarding claim 54 , Lavelle does not explicitly disclose the transmitter having a differential phase shift keying modulated signal. However, it would have been obvious to one of ordinary skill in the art at the time of the invention to use DPSK in Lavelle. Lavelle discusses that one of ordinary skill in the art will contemplate the various elements required to implement CDMA in an entertainment system according to the invention. When designing a transmitter, one must balance many various factors and depending on the characteristics desired (number of bits transferred, complexity and arrangement of the constellation), one may decide to implement a DPSK method to achieve a certain balance.

Regarding **Claims 57 and 59**, claims 57 and 59 are met by the rejections of claims 54 and 55 as stated above.

Claims 56 and 58 are rejected under 35 U.S.C. 103(a) as being unpatentable over Lavelle (U.S. Patent 6,678,892) in view of Benthin (U.S. Patent 5,790,595)

Regarding **Claims 56 and 58**, in addition to the elements stated above regarding claims 55 and 57:

The combination does not explicitly disclose that the receiver utilizes embedded fuzzy logic to enhance detection of the unique user code in said transmitted DSSS signal. However, it is well known to use a fuzzy logic detection system in a receiver such as Lavelle's. Benthin discloses a receiver that determines soft data bits (Figure i, function of Figure 2) for additional decoding performance in communication with the received, demodulated signal (output of II) from a spread spectrum demodulator (II) (col. 2, lines 6-31 col. 5, lines 10-25).

Applying this to the receiver of the combination meets the limitation of the receiver utilizing embedded fuzzy logic to enhance detection of the unique user code.

To one of ordinary skill in the art at the time the invention was made, it would have been obvious to implement the soft decision relevant components of Benethin as part of the encoding and signal reception parts of the system of the combination. Lavelle discusses that one of ordinary skill in the art will contemplate the various elements required to implement CDMA in an entertainment system according to the invention The motivation behind such a modification would have been that the soft bit determining circuitry would have improved the reliability of the decision relating to the hard data bit equivalents of the received information, as is taught by Benethin.

(10) Response to Argument

In **section 1** of Appellants arguments, Appellant submits that the rejections under 35 U.S.C. 112 1st paragraph should be reversed.

Appellant alleges first:

> First, there are multiple paragraphs directed to fuzzy logic detection embedded in receiver 50. The Appellant directs the board's attention to the entire specification but specifically to paragraphs [0010], [0013] and [0014] for detailed support of the fuzzy logic detection 4. Fuzzy logic is software that employs a set of rules. For example, in paragraph [0013], the specification states "fuzzy logic detection sub-system 61 may use a set of if-then rules." and;
>
> Paragraph [0014] provides explicit details related to the "rules" and the evaluation of such "rules." More importantly, FIG. 4 is provided to graphically illustrate features of the fuzzy logic detection and the basis of the evaluation of the rules. In fact, FIG. 4 is described as a "graph showing utilization of an embedded fuzzy logic coding algorithm."

Examiner agrees that these paragraphs discuss some sort of fuzzy logic detection system. Further, it's shown that this system is located in the receiver of Fig. 1. Appellant agrees that this receiver is fully disclosed in Fig. 3 (Appeal Brief pg 18). However, these portions discussed show various rules on how the fuzzy logic operates. It does not include any disclosure on this piece of this system as to how these rules operate in conjunction with the other pieces of hardware. Nor does it disclose what portion of hardware actually performs these operations. One of ordinary skill in the art reviewing this disclosure would notice there is some sort of fuzzy logic detection system taught. However, one would not understand how to implement it within the receiver. It

is merely out there on an island, no corresponding connections nor is its implementation in another piece disclosed.

Appellant further submits in section 1:

> The fuzzy logic detection sub-system 61 is shown in FIG. 1 and described as being associated with receiver 50. As acknowledged on page 3 of the FOA, the rejection states "receiver unit 50 is fully disclosed in Fig. 3." Hence, in view of the disclosure and drawings, Appellant has described the fuzzy logic detection sub-system 61 and how it is used to enhance detection of the unique user code.

As stated above, Appellant has disclosed a form of fuzzy logic detection. However, Appellant has failed to explicitly show how it is implemented within the receiver of Figs.1 and 3. One of ordinary skill in the art would not know how or where to implement this fuzzy logic within the receiver 50 as disclosed in Fig. 3. There is not disclosure on where the sub system receives data from or what it outputs it to, only that it performs some operations on data.

Appellant further submits in section 1:

> “First, as the Examiner realizes, multiple methods of implementing a fuzzy logic detector exist. Therefore a person skilled in the art can use any method of implementation to enable the claim. However, the more important issue is not how the fuzzy logic detector is implemented, but how the fuzzy logic algorithm operates and how the fuzzy logic detector interacts with the other elements, which is unmistakably described in the specification.”

Examiner respectfully disagrees. Examiner submits that it is important how the fuzzy logic detector is implemented. Examiner submits that how the fuzzy logic

algorithm operates is disclosed in the specification, but how it interacts with the other elements, is not unmistakably described in the specification. Appellant has provided no location where the interaction is described. After multiple reviews of the specification, the Examiner is unable to find any location disclosing any interaction. Rather, it appears as though it is just an algorithm out in space, somewhere in this receiver. One of ordinary skill in the art would have no idea where to place this algorithm and logic within the device.

Appellant further submits in section 1:

> Second, the algorithm for the fuzzy logic detector was clearly laid out in the specification, as shown above. As the specification demonstrates, the fuzzy logic detector is used in the receiver 50 and a person skilled in the art would recognize that the detector is used somewhere after receiving the signal and before audio output. Additionally, there is no requirement that the fuzzy logic detector be discussed specifically in the drawings so long as the specification makes note of it.

Examiner respectfully disagrees. Appellant sufficiently sums up the enablement problem by stating "the detector is used somewhere after receiving the signal and before audio output." One of ordinary skill in the art would have no idea where to place this component or what component in Fig. 3 performs these operations. Appellant submits that it is used in receiver 50, but where is it implemented? Examiner agrees that one of ordinary skill in the art would understand that it is implemented somewhere after receiving the signal and before the audio output, but that is the crux of the problem. One would not know exactly where. Thus recreating the system would be

impossible for one of ordinary skill in the art. **Undue experimentation** would be necessary to figure out exactly where it would need to be implemented as it is not sufficiently disclosed. Where exactly would one place this software or hardware within the disclosure of Fig. 3?

Appellant further submits in section 1:

> Appellant is unclear as to why the Examiner views "software" as being different from "logic." Nonetheless, "if-then" rules are implemented in software. Many programming languages provide "if-then" syntax. Appellant is also at a loss as to how or why a fuzzy logic detector would be considered "a method."
>
> Appellant notes that a receiver is not just a hardware device such that it functions without any software. On the other hand, a receiver cannot be just software. Software must be executed by a processor having hardware properties. For example, a decoder is implemented using a set of instructions executed by a processor in accordance with various decoding standards or protocols.
>
> In general, a receiver marries hardware components such as a housing, resistors, capacitors, antenna, processors, etc. with software to carryout the receiving functions including, but not limited to, CDMA reception and user code detection. As disclosed by Appellant, the fuzzy logic detection is used to enhance the detection of a user code by the receiver, especially in a shared space environment with other users.

Examiner submits that the statement as to not being able to determine whether the fuzzy logic detection subsystem is hardware or software is part of the enablement problem. It is agreed by the examiner that if it is software, then it must have corresponding hardware to operate. If this is the case, then which portion of the receiver in Fig. 3 performs the fuzzy logic operations? If it is merely hardwired logic, then where is this hardware located within Fig. 3?

In **section 2/3** of Appellants arguments, Appellant submits that the rejections under 35 U.S.C. 102(e) in view of Lindemann should be reversed.

Appellant argues in section 2/3 that Lindemann doesn't teach "independent audio reproduction free of interference from other users or wireless devices. But rather:

> Furthermore, Appellant observes that Lindemann does not mention interference or address the problem identified by Appellant and thus Appellant's solution to provide a user with independent audio reproduction free of interference from other users or wireless devices. Instead, Lindemann is directed to a digital wireless loudspeaker system and the delivery of signals to the speakers. Thus, Lindemann is not directed to a system capable of (1) providing a user with independent audio reproduction; and (2) reproduction free of interference from other users or wireless devices. By contrast, Lindemann simply provides a "loudspeaker system" where anyone can listen."

Examiner respectfully disagrees. Regarding the first issue of "independent audio reproduction," it appears as though Appellant is attempting to further narrow the claims within these statements. It appears as though Appellant is equating "independent audio reproduction" with a single person listening via headphone devices without others being able to listen. Examiner respectfully disagrees with this characterization of the claim. Lindemann does provide playback via a speaker system. Lindemann's system is capable of providing audio to specific speaker's in specific zones; para 66. For example, there may be two rooms A and B, each room may have 5 speakers. The device will send music to as few as 1 and as many as 5 to each of the rooms. The system will only enable the speakers in the zones desired by the user. It is respectfully submitted that a single user in any one of these zones enjoying audio reproduction alone, would meet the limitation of independent audio reproduction. For example,

assume a single user is located in zone A and another single user in zone B. Zone A and B would typically be separate rooms of a single family dwelling (i.e. kitchen and bedroom). The user in zone A would be enjoying music alone and separate from the user in zone B (i.e. independent).

Additionally, Lindemann does teach reproduction free of interference from other users or wireless devices, specifically wireless devices. The speakers in Lindemann sent status messages, these messages tell specific speakers within the system whether or not they should be enabled; para 66. For example, speaker x in Group A and speaker y in Group B are two separate speaker that will only be enabled when the particular status message corresponding to each individual speaker is activated. Activating speaker x will not interfere with the activation or reproduction of music of speaker y because they have specific messages corresponding to specific speakers. Thus, assuming both speaker x and y are active, if the user decides to deactivate speaker x, a status message will be sent to the entire system, it will be received by all of the devices, but only x will be deactivated. Y will remain on and will not be interfered with.

Appellant further states in section 2/3:

> The Advisory Action further asserts on page 3 and 4 that "Element (2) is clearly met by virtue of the fact that it is CDMA reproduction. CDMA's entire goal is to minimize interference to provide a clear transmission. The fact that the speakers decode status messages to determine whether or not to produce music as well as what to produce ... clearly meets the 'reproduction free of interference with other users or wireless devices.'"

Examiner submits that in addition to what was stated above regarding "reproduction free of interference from other user or wireless devices," the limitation is also met by virtue of the fact it is a CDMA transmission. A CDMA transmission is set up to ensure that a particular user or group of users will receive the transmission. This must occur, otherwise cell phone transmission which typically use CDMA would not operate properly.

The remaining arguments in section 2/3 are directed to the fact that Lindemann doesn't have multiple RF transmitters and thus can't correct the interference from multiple transmitters. It also states that Appellant's device contains multiple transmitters and corrects interference of communication sent from multiple transmitters.

However, this argument is irrelevant. First, Appellant's claim is directed only to "at least **one** digital audio transmitter." Thus only one transmitter is necessary to meet the claim. Further it is only necessary to correct the interference from one transmitter since it is the only one required in the claim.

Furthermore, Appellant's specification is completely silent as to multiple transmitters being present, let alone any disclosure as to how to correct interference amongst multiple.

As a result, while these problems (stated on pages 21 – 25 of the Appeal Brief) may exist in communication systems with multiple transmitters, the arguments are completely irrelevant due to the lack of limitations in the claims and disclosure in the specification.

It should also be noted that Appellant is attempting to characterize in section 2 the interference claimed is RF interference. However, the claims are not limited to this interference, nor does the disclosure limit the interference to RF interference.

In **section 4** of Appellants arguments, Appellant submits that the rejections under 35 U.S.C. 103(a) in view of Lindemann and Sato should be reversed.

Appellant first states in section 4:

> In addition to Lindemann and Sato (U.S. Patent No. 4,970,637), the rejection of Claim 19 also relies upon Roberts, et aL (U.S. Patent 6,418,558), and Schotz (U.S. Patent 5,946,343). Furthermore, the rejection of Claim 19 relies on numerous statements that various claimed elements in Claim 19 are notorious.

Examiner submits that the rejections do not rely upon the Roberts and Schotz references. Rather, notoriously well known modifications are shown (which have not been challenged during prosecution) by the Examiner, and then Roberts and Schotz are shown as evidentiary support. The rejection does not rely upon these references.

In this section, Appellant submits that the combination fails to disclose 1.) "for private audio reproduction of said music" or 2.) "reproduce said audio output representative of said music, if the unique user code bit sequence is recognized."

Regarding element 1.), Appellant states:

> There is nothing in Lindemann, the primary reference, to provide a user with private audio reproduction, such as via headphones... By contrast, Lindemann simply provides a "loudspeaker system" where anyone can listen; …The word "private" does not appear anywhere in Lindemann or Sato. Furthermore, "private" does not appear in Schotz '343 or Roberts '558.

Examiner respectfully disagrees with this statement. As stated above in section 2, the private/independent audio reproduction is achieved by single users in separate rooms. Examples and further description is shown in the response to section 2/3.

Further Regarding element 1.), Appellant states:

> Page 5 of the Advisory Action asserts that the purpose of Lindemann is to provide music to multiple zones. Appellant's invention, on the other hand, among other things, provides private listening of different music to multiple individuals sharing the same space (i.e. room/zone).

Examiner somewhat agrees with this statement. While, Appellant's invention is disclosed as providing private listening to multiple individuals sharing the same space, this is not claimed. Since it is not specifically stated in the claim, it can not be considered to limit the claim language. No language is present regarding "multiple users" or "sharing the same space."

Further Regarding element 1.), Appellant states:

> Music devices enumerated in paragraph [0002] includes portable devices. Therefore, Lindemann does not disclose Appellant's system that provides different music privately to multiple individuals, where each user has her own receiver headphone and transmitter and is in the same shared space with other users.

Again, there are no claim limitations for "multiple individuals" or "in the same shared space with other users."

Regarding element 2.) Appellant states:

> Additionally, in Lindemann, the system does not transmit "music" with a "unique user code bit sequence." At best, Lindemann sends different channels (for stereo or surround sound) to different speakers and does not require "a unique user code bit sequence." Providing a "loudspeaker system" is at the heart of the Lindemann invention. By contrast Appellant's invention seeks to provide "private audio reproduction.' .... Private audio reproduction" is diametrically opposed to the operation of a "loudspeaker" system such as that of Lindemann.

Examiner respectfully disagrees. As shown previously, status messages are included in the transmission frames (i.e. audio transmissions) to control speaker attributes such as speaker group and speaker activation (abstract). Paragraph 35 further states that this status information is added to each digital audio frame 503. This is in direct contract to what Appellant is alleging. These status messages are meant to meet the unique user code limitation as they only permit playback by the activated speakers. Further, a user of the system must assign which groups and speakers are activated; para 64. Since these speakers are assigned by a user, and activated by status messages, the status messages can be considered produced by the user, and thus can be considered a unique user code (i.e. created by a user and unique to each individual speaker).

Appellant further states regarding element 2):

> Appellant's wireless digital audio music system utilizes Code Division Multiple Access (CDMA) to allow multiple wireless digital audio music system users to simultaneously share a finite amount of radio frequency spectrum. Lindemann utilizes CDMA to multiplex the audio spectrum (Lindemann, paragraph 0075 states "This corresponds to a Code Division Multiple Access (CDMA) method of multiplexing the multiple audio channels."). Moreover, Schotz does not mention CDMA anywhere. Therefore, any combination of Lindemann, Sato, Schotz or Roberts would not produce the Appellant's invention.

Again, Appellant is attempting to limit the device to show multiple users simultaneously sharing a finite amount of radio frequency spectrum. While Appellants invention may be able to do this, it is not positively recited within the claims. Thus, the argument is considered irrelevant.

Appellant further states regarding element 2):

> On page 8 of the FOA, the Examiner appears to be equating "unique user code bit sequence," as claimed by Appellant, to "status messages ... in the transmission frames to control speaker attributes such as speaker group." The FOA also directs Appellant to paragraphs [0011] and [0064]. However, Lindemann provides channel selection for various combinations of speakers or groups of speakers such as to provide, in one embodiment, a "full complement of six surround sound speakers." Lindemann is essentially silent on the use of or the need for a "unique user code bit sequence."
>
> However, the status message enables an individual speaker to select a particular channel from a set of channels contained in a single RF signal transmitted from a particular RF transmitter. (Lindemann, Claim 1 states "means for selecting one of the audio channels from the RF signal for broadcast" (emphasis added); Lindemann Claim 14 states "transmitting an RF signal including at least two audio channels of transmission data." (emphasis added)). Lindemann does not disclose the use of unique user codes to select between multiple RF signals. As discussed above, Lindemann does not discuss the problem of interference caused by multiple CDMA transmission sources in proximity of a CDMA receiver, and therefore does not discuss utilization and capture of unique user codes to select between multiple RF signals.

Examiner respectfully disagrees with this statement. Again, Appellant is stating that Lindemann does not teach a feature that is not positively claimed, specifically: "Lindemann does not disclose the use of unique user codes to select between multiple RF signals, does not discuss the problem of interference caused by multiple CDMA transmission sources in proximity of a CDMA receiver, and therefore does not discuss utilization and capture of unique user codes to select between multiple RF signals." These limitations are not positively recited in the claim and thus cannot be given weight. The arguments are therefore rendered irrelevant.

Appellant states regarding claim 28 in section 4:

> As to Claim 28, Lindemann is directed to a "digital wireless loudspeaker system" with surround sound Capability. Thus, modifying Lindemann to incorporate the teachings of Lindemann as modified by Sato (Schotz and/or Roberts) into a headphone set is basically using Appellant's own disclosure.

Examiner respectfully disagrees. The combination is directed to a zone distributed speaker system. It is notoriously well known in the art to substitute headphones where a speaker is located. Thus, the combination would still provide zone distributed music, but in place of the speaker, a headphone would be present. It is also notoriously well known that speakers include a headphone port. Modifying or substituting speakers for headphones in this manner is notoriously well known. It cannot be said that it is using Appellant's own disclosure as headphone and speaker substitution and modification was known **well before** 20 December 2001.

Appellant further states regarding claim 28 in section 4:

> Furthermore, such a modification destroys the heart of Lindemann's invention (primary reference) and its intended operation, which is to disperse multiple speakers with speaker groups in different rooms as well as provide a "full complement of six surround sound speakers."

Examiner respectfully disagrees. the combination still operates as a zone distribution system if a headphone system is substituted. Further, the system is not required to have a full 6 speaker surround sound system. Paragraph 66 shows a stereo surround sound set up. Headphones with left and right channels are notoriously well known.

In **section 5** of Appellants arguments, Appellant submits that the rejections under 35 U.S.C. 103(a) in view of Lindemann, Sato and Benthin should be reversed.

Appellant states in section 5 that the combination does not disclose "the receiver utilizes embedded fuzzy logic to enhance detection of the unique user code in said transmitted DSSS signal."

In support of this argument, Appellant submits that Lindemann does not require a unique user code, thus there is no need to use fuzzy logic to enhance detection of the unique user code.

Examiner respectfully disagrees. The unique user codes are met by the status messages as shown above in section 4 subsection 2. Since it is shown that the unique

user codes are taught, it cannot be argued that the combination fails due to their absence.

In **section 6** of Appellants arguments, Appellant submits that the rejections under 35 U.S.C. 103(a) in view of Lindemann should be reversed.

Appellant states in section 6 regarding claims 41 and 42:

> Additionally, there is no suggestion to make the transmitter of Lindemann "battery-powered," as claimed in Claims 41 and 42.

Examiner respectfully disagrees. Substituting power sources, i.e. wired or battery powered, is notoriously well known in the art. It would have been obvious to one of ordinary skill in the art to try to modify the combination to produce a receiver using battery power. It is even further likely that this would have been obvious to try since it was a wireless transmission system. It would be likely that one would want to remove all of the wires from the system.

In **section 7** of Appellants arguments, Appellant submits that the rejections under 35 U.S.C. 103(a) in view of Lindemann should be reversed.

The arguments regarding claims 51 and 52 are met by the above statements regarding the unique user code and the private listening.

Appellant further states:

> On page 13 of the FOA, Appellant observes that when rejecting Claims 43, 44 and 49-52, the Examiner relies on the rejections provided for 19, 27 and 30. However, Claim 30 is not rejected under Lindemann in view of Sato (Schotz and/or Roberts).

Examiner would like to note that a typographical error was present in the Final rejection on page 13. Specifically claim 30 was used to meet the limitation of claims 43, 44 and 49 - 52. However, the entire rejection was not meant to be used, but rather the features taught by Lindemann present in the claims (i.e. at least one module adapted to amplify said generated audio output).

In **section 8** of Appellants arguments, Appellant submits that the rejections under 35 U.S.C. 103(a) in view of Lindemann, Sato and Benthin should be reversed.

The arguments regarding claim 53 are met by the above statements regarding the unique user code and the private listening.

In **section 9** of Appellants arguments, Appellant submits that the rejections under 35 U.S.C. 103(a) in view of Lavelle should be reversed.

Appellant states in regard to claim 54:

> First, in Appellant's Claim, the connection of the audio source and the transmitter via a headphone plug/jack is positively recited. Appellant observes that the transmitter and receiver of Lavelle are intended to be installed in a vehicle and would generally be permanent fixtures in the

> vehicle. The transmitter 510 in Lavelle, is arranged to communicate with wireless headphone sets via CDMA. Hence, in Lavelle, there is neither an existing analog headphone plug/jack, as claimed, nor a need for one. More importantly, Lavelle has no need for a headphone plug/jack since the original configuration of the primary reference (i.e. Lavelle) seeks to provide wireless communications in a vehicle (obviating the need for a headphone plug/jack to connect the headphone).

Examiner disagrees with the statement that there is no need for an analog headphone jack in Lavelle. First, Lavelle recognizes that the input devices 190 are merely illustrative and other devices may be employed in accordance with the invention; col. 4 lines 35-40. Lavelle shows an external audio device section that receives external audio/video signals; Element 124 and col. 5 lines 30 – 37. Lavelle does not disclose a headphone jack specifically, but headphone jacks were notoriously well known at the time of the invention. Portable CD players, TVs and DVD players typically include this jack and are taught to be known by Lavelle. Thus, there is a need, contrary to Appellants statements.

Appellant further states in regard to claim 54:

> Nonetheless, even assuming that Lavelle may be modified with a headphone plug/jack, there is no teaching in Lavelle to further remove the transmitter 510 from the vehicle and couple this "transmitter" via a headphone plug/jack (which is not even present in Lavelle). Nowhere in Lavelle is such an arrangement described, especially since a headphone plug/jack does not exist in the first place. Hence, it appears that the Examiner is rejecting Appellant's invention in hindsight, using Appellant's own disclosure.
>
> Appellant further observes that the transmitter 510 of Lavelle is battery powered by virtue of its installation in the vehicle and connection to the vehicle's battery source. Thus, for Lavelle's transmitter to utilize the charging (battery) system of a vehicle for power, it is necessary to connect the entertainment unit and transmitter by cable or cord to the charging

> (battery) system. Hence, removing the transmitter 510 from the vehicle's battery source destroys the transmitter's ability to use the vehicle's battery source relied upon in the Examiner's rejection on page 17 of the FOA.

Examiner respectfully disagrees with this allegation. It is unclear why it must be necessary to remove the transmitter from the vehicle as it appears Appellant is attempting to state. Modification of the system would not require removal from the vehicle, rather modification would alter plug 124 to accept an analog headphone jack. No removal would be necessary as the device would remain fixed, and clearly 124 would be accessible without removable as Lavelle discloses that external units can be used as inputs. A user must have access to this input, else one would not be able to input another device.

Appellant next discusses the differences between a typical vehicle battery and a typical portable player battery. Appellant states specifically that "Lavelle does not contemplate use of a portable battery-powered type, and thus Lavelle does not disclose the use of a portable battery-powered transmitter for use portable system."

However, the use of a portable battery-powered transmitter for use in a portable system is not required as the claim is not limited at all to any portable system. Furthermore, a portable battery is not required, only a battery-powered transmitter. Finally, while a vehicle battery is given, the specifics of Appellants battery are not claimed. Any battery meets the battery disclosed by Appellant since specific details are not given. While power provided by car batteries and portable device batteries may

differ, it is clear that there are power regulators and transformers used to supply the power necessary to the transmitter device of Lavelle.

Appellant further states in regard to claim 54:

> Additionally, while Lavelle employs CDMA communications between the transmitter and headphone, Lavelle does not teach a unique user code, as claimed. In the CDMA embodiment of Lavelle, Walsh code generators and PN (pseudo random number) generators are described. However, while these generators produce a code, such a code is designed to change. Thus, Lavelle codes are not "unique" user codes.

Examiner respectfully disagrees. These PN generators are not meant to read upon the limitation of the “unique” user codes. As stated in the FOA, the specific carrier frequencies are meant to read upon the unique use codes. Each user has a headset that will be tuned to a specific carrier frequency to listen to the audio. Since this is set by a user, and the frequency is supplied by the receiver to transmit the audio, it is a unique user code.

Appellant further states in regard to claim 54:

> Appellant observes that Lavelle provides multiple headphone sets in a vehicle and intends to minimize interference between the headphone sets [Lavelle 6,678,892 column 6 lines 43 - 45 "...the wireless signals may be encoded to prevent interference between the two wireless headphone sets 152, 154."]. By contrast, Claim 54 recites "... CDMA communication ... provide a particular user with private audio reproduction free of interference from other users of other wireless digital audio music systems in a shared space." Each wireless digital audio music system consists of a CDMA transmitter and a CDMA receiver headphone; hence, interference between a particular CDMA receiver headphone of a wireless digital audio music system and the CDMA transmitters of other wireless digital audio music systems, in a shared space, is eliminated.

> Lavelle's CDMA embodiment does not address interference between a headphone set and many transmitters simultaneously sharing the same space. Additionally, Lavelle also does not "provide a particular user with private audio reproduction free of interference from other users of other wireless digital audio music systems in a shared space," as claimed. Furthermore, Lavelle does not use a unique user code.

Examiner respectfully disagrees. Lavelle is directed to reducing interference in a CDMA system as explicitly stated in col. 7 lines 25 – 35. Lavelle may not explicitly disclose multiple transmitters. However, this limitation does not need to be met as it is not sufficiently claimed nor disclosed. Further information regarding the multiple transmitters limitation is provided above in section 2/3.

Appellant further states in regard to claim 54:

> Lavelle also does not "provide a particular user with private audio reproduction free of interference from other users of other wireless digital audio music systems in a shared space."

Examiner respectfully disagrees. Lavelle does precisely this, in the same manner as taught by Appellant. Lavelle teaches" providing a particular user (user of headphone 152 or 154) with private audio reproduction (private by virtue of the headphone use, and specifically argued as private within Appellants appeal brief) free of interference from other user of other wireless digital audio music systems (Lavelle wishes to reduce interference between the users; col. 7 lines 25 – 35) in a shared space (both users in a vehicle).

Appellant further argues in section 9 about and "multiple transmitter" limitations. Appellant states for example:

> "Appellant's invention uses multiple transmitters, where each transmitter outputs data packets in a stream."
> "Because Lavelle's CDMA embodied system contains only one transmitter, it does not address headphone receiver interference due to many same transmitters simultaneously sharing the same space."
> "Lavelle's system differs from Appellant's invention because all signals in Lavelle originate from a single stationary transmitter."
> "As stated earlier, Lavelle only utilizes a single transmitter. Therefore, Lavelle does not deal with interference that could result from multiple transmitters and multiple receivers, whereby each transmitter transmits to each respective receiver in a shared space."
> "Lavelle never mentions or suggests that his CDMA design accounts for multiple similar CDMA transmitters operating in the same space."

However, while these arguments may point out differences between the cited references and Appellants inventions, it is neither claimed nor sufficiently disclosed. (emphasis added as this seems to be a recurring contention with the arguments).

In **section 10** of Appellants arguments, Appellant submits that the rejections under 35 U.S.C. 103(a) in view of Lavelle and Benthin should be reversed.

The arguments in section 10 are directed to the device of Lavelle not disclosing unique user codes and thus there is no reason to use fuzzy logic. This is not

persuasive for the same reasons as shown above. Namely, the teaching of the unique user code is present and thus there is a reason to sue the fuzzy logic.

(11) Related Proceeding(s) Appendix

No decision rendered by a court or the Board is identified by the examiner in the Related Appeals and Interferences section of this examiner's answer.

For the above reasons, it is believed that the rejections should be sustained.

Respectfully submitted,

/Andrew C Flanders/

Conferees:

/Sinh Tran/

Supervisory Patent Examiner, Art Unit 2615

/Vivian Chin/

Supervisory Patent Examiner, Art Unit 2615

UNITED STATES PATENT AND TRADEMARK OFFICE

UNITED STATES DEPARTMENT OF COMMERCE
United States Patent and Trademark Office
Address: COMMISSIONER FOR PATENTS
P.O. Box 1450
Alexandria, Virginia 22313-1450
www.uspto.gov

APPLICATION NO.	FILING DATE	FIRST NAMED INVENTOR	ATTORNEY DOCKET NO.	CONFIRMATION NO.
10/648,012	08/26/2003	C. Earl Woolfork	W003-4000	3337

48162 7590 04/09/2008

THE PATEL LAW FIRM, P.C.
2532 DUPONT DRIVE
IRVINE, CA 92612

EXAMINER	
FLANDERS, ANDREW C	
ART UNIT	PAPER NUMBER
2615	

MAIL DATE	DELIVERY MODE
04/09/2008	PAPER

Please find below and/or attached an Office communication concerning this application or proceeding.

The time period for reply, if any, is set in the attached communication.

UNITED STATES DEPARTMENT OF COMMERCE
U.S. Patent and Trademark Office
Address: COMMISSIONER FOR PATENTS
P.O. Box 1450
Alexandria, Virginia 22313-1450

APPLICATION NO./ CONTROL NO.	FILING DATE	FIRST NAMED INVENTOR / PATENT IN REEXAMINATION	ATTORNEY DOCKET NO.
10648012	8/26/2003	WOOLFORK, C. EARL	W003-4000

THE PATEL LAW FIRM, P.C.
2532 DUPONT DRIVE
IRVINE, CA 92612

EXAMINER	
ANDREW C. FLANDERS	
ART UNIT	**PAPER**
2615	20080403

DATE MAILED:

Please find below and/or attached an Office communication concerning this application or proceeding.

Commissioner for Patents

A typographic error has caused claims 57 and 59 to be omitted from the heading in the 103(a) rejection in view of Lavelle on page 16 of the Examiner's answer. The actual rejections are included in the body under the heading of the rejection in view of Lavelle and 57 and 59 should be included in the heading as well.

/Sinh N Tran/
Supervisory Patent Examiner, Art Unit 2615

Electronic Acknowledgement Receipt

EFS ID:	3131955
Application Number:	10648012
International Application Number:	
Confirmation Number:	3337
Title of Invention:	WIRELESS DIGITAL AUDIO SYSTEM
First Named Inventor/Applicant Name:	C. Earl Woolfork
Customer Number:	48162
Filer:	Megan Elizabeth Lyman
Filer Authorized By:	
Attorney Docket Number:	W003-4000
Receipt Date:	10-APR-2008
Filing Date:	26-AUG-2003
Time Stamp:	12:33:14
Application Type:	Utility under 35 USC 111(a)

Payment information:

Submitted with Payment	no

File Listing:

Document Number	Document Description	File Name	File Size(Bytes) /Message Digest	Multi Part /.zip	Pages (if appl.)
1	Power of Attorney	POAWoolfork_4_Megan_Signed_4-10-2008.pdf	403494 0123a314f6d2600f20530a2f5c2411c991e63d2d	no	1

Warnings:	
Information:	

Total Files Size (in bytes):	403494

This Acknowledgement Receipt evidences receipt on the noted date by the USPTO of the indicated documents, characterized by the applicant, and including page counts, where applicable. It serves as evidence of receipt similar to a Post Card, as described in MPEP 503.

New Applications Under 35 U.S.C. 111
If a new application is being filed and the application includes the necessary components for a filing date (see 37 CFR 1.53(b)-(d) and MPEP 506), a Filing Receipt (37 CFR 1.54) will be issued in due course and the date shown on this Acknowledgement Receipt will establish the filing date of the application.

National Stage of an International Application under 35 U.S.C. 371
If a timely submission to enter the national stage of an international application is compliant with the conditions of 35 U.S.C. 371 and other applicable requirements a Form PCT/DO/EO/903 indicating acceptance of the application as a national stage submission under 35 U.S.C. 371 will be issued in addition to the Filing Receipt, in due course.

New International Application Filed with the USPTO as a Receiving Office
If a new international application is being filed and the international application includes the necessary components for an international filing date (see PCT Article 11 and MPEP 1810), a Notification of the International Application Number and of the International Filing Date (Form PCT/RO/105) will be issued in due course, subject to prescriptions concerning national security, and the date shown on this Acknowledgement Receipt will establish the international filing date of the application.

PTO/SB/82 (01-06)
Approved for use through 12/31/2008. OMB 0651-0035
U.S. Patent and Trademark Office; U.S. DEPARTMENT OF COMMERCE
Under the Paperwork Reduction Act of 1995, no persons are required to respond to a collection of information unless it displays a valid OMB control number.

REVOCATION OF POWER OF ATTORNEY WITH NEW POWER OF ATTORNEY AND CHANGE OF CORRESPONDENCE ADDRESS

Application Number	10/648,012
Filing Date	August 26, 2003
First Named Inventor	C. Earl Woolfork
Art Unit	2615
Examiner Name	Andrew Flanders
Attorney Docket Number	W003-4000

I hereby revoke all previous powers of attorney given in the above-identified application.

☐ A Power of Attorney is submitted herewith.

OR

☑ I hereby appoint the practitioners associated with the Customer Number: 68533

☑ Please change the correspondence address for the above-identified application to:

☑ The address associated with Customer Number: 68533

OR

☐ Firm *or* Individual Name					
Address					
City		State		Zip	
Country					
Telephone		Email			

I am the:

☑ Applicant/Inventor.

☐ Assignee of record of the entire interest. See 37 CFR 3.71.
Statement under 37 CFR 3.73(b) is enclosed. (Form PTO/SB/96)

SIGNATURE of Applicant or Assignee of Record

Signature			
Name	C. Earl Woolfork		
Date	4/10/08	Telephone	(818) 625-4966

NOTE: Signatures of all the inventors or assignees of record of the entire interest or their representative(s) are required. Submit multiple forms if more than one signature is required, see below*.

☐ *Total of _____ forms are submitted.

This collection of information is required by 37 CFR 1.36. The information is required to obtain or retain a benefit by the public which is to file (and by the USPTO to process) an application. Confidentiality is governed by 35 U.S.C 122 and 37 CFR 1.11 and 1.14. This collection is estimated to take 3 minutes to complete, including gathering, preparing, and submitting the completed application form to the USPTO. Time will vary depending upon the individual case. Any comments on the amount of time you require to complete this form and/or suggestions for reducing this burden, should be sent to the Chief Information Officer, U.S. Patent and Trademark Office, U.S. Department of Commerce, P.O. Box 1450, Alexandria, VA 22313-1450. DO NOT SEND FEES OR COMPLETED FORMS TO THIS ADDRESS. **SEND TO: Commissioner for Patents, P.O. Box 1450, Alexandria, VA 22313-1450.**

If you need assistance in completing the form, call 1-800-PTO-9199 and select option 2.

UNITED STATES PATENT AND TRADEMARK OFFICE

UNITED STATES DEPARTMENT OF COMMERCE
United States Patent and Trademark Office
Address: COMMISSIONER FOR PATENTS
P.O. Box 1450
Alexandria, Virginia 22313-1450
www.uspto.gov

APPLICATION NUMBER	FILING OR 371(C) DATE	FIRST NAMED APPLICANT	ATTY. DOCKET NO./TITLE
10/648,012	08/26/2003	C. Earl Woolfork	W003-4000

CONFIRMATION NO. 3337

68533
MEGAN LYMAN
1816 SILVER MIST CT.
RALEIGH, NC 27613

POA ACCEPTANCE LETTER

OC000000029448628

Date Mailed: 04/17/2008

NOTICE OF ACCEPTANCE OF POWER OF ATTORNEY

This is in response to the Power of Attorney filed 04/10/2008.

The Power of Attorney in this application is accepted. Correspondence in this application will be mailed to the above address as provided by 37 CFR 1.33.

/sibrahim/

Office of Data Management, Application Assistance Unit (571) 272-4000, or (571) 272-4200, or 1-888-786-0101

UNITED STATES PATENT AND TRADEMARK OFFICE

UNITED STATES DEPARTMENT OF COMMERCE
United States Patent and Trademark Office
Address: COMMISSIONER FOR PATENTS
P.O. Box 1450
Alexandria, Virginia 22313-1450
www.uspto.gov

APPLICATION NUMBER	FILING OR 371(C) DATE	FIRST NAMED APPLICANT	ATTY. DOCKET NO./TITLE
10/648,012	08/26/2003	C. Earl Woolfork	W003-4000

CONFIRMATION NO. 3337

48162
THE PATEL LAW FIRM, P.C.
2532 DUPONT DRIVE
IRVINE, CA 92612

POWER OF ATTORNEY NOTICE

OC000000029448576

Date Mailed: 04/17/2008

NOTICE REGARDING CHANGE OF POWER OF ATTORNEY

This is in response to the Power of Attorney filed 04/10/2008.

- The Power of Attorney to you in this application has been revoked by the applicant. Future correspondence will be mailed to the new address of record(37 CFR 1.33).

/sibrahim/

Office of Data Management, Application Assistance Unit (571) 272-4000, or (571) 272-4200, or 1-888-786-0101

Electronic Acknowledgement Receipt

EFS ID:	3168376
Application Number:	10648012
International Application Number:	
Confirmation Number:	3337
Title of Invention:	WIRELESS DIGITAL AUDIO SYSTEM
First Named Inventor/Applicant Name:	C. Earl Woolfork
Customer Number:	68533
Filer:	Megan Elizabeth Lyman
Filer Authorized By:	
Attorney Docket Number:	W003-4000
Receipt Date:	17-APR-2008
Filing Date:	26-AUG-2003
Time Stamp:	14:57:16
Application Type:	Utility under 35 USC 111(a)

Payment information:

Submitted with Payment	no

File Listing:

Document Number	Document Description	File Name	File Size(Bytes) /Message Digest	Multi Part /.zip	Pages (if appl.)
1	Letter Requesting Interview with Examiner	Interview_Request_Final.pdf	828287 2aa48122d36d13543ae9c506468250929b63dd56	no	2

Warnings:	
Information:	

Total Files Size (in bytes):	828287

This Acknowledgement Receipt evidences receipt on the noted date by the USPTO of the indicated documents, characterized by the applicant, and including page counts, where applicable. It serves as evidence of receipt similar to a Post Card, as described in MPEP 503.

New Applications Under 35 U.S.C. 111
If a new application is being filed and the application includes the necessary components for a filing date (see 37 CFR 1.53(b)-(d) and MPEP 506), a Filing Receipt (37 CFR 1.54) will be issued in due course and the date shown on this Acknowledgement Receipt will establish the filing date of the application.

National Stage of an International Application under 35 U.S.C. 371
If a timely submission to enter the national stage of an international application is compliant with the conditions of 35 U.S.C. 371 and other applicable requirements a Form PCT/DO/EO/903 indicating acceptance of the application as a national stage submission under 35 U.S.C. 371 will be issued in addition to the Filing Receipt, in due course.

New International Application Filed with the USPTO as a Receiving Office
If a new international application is being filed and the international application includes the necessary components for an international filing date (see PCT Article 11 and MPEP 1810), a Notification of the International Application Number and of the International Filing Date (Form PCT/RO/105) will be issued in due course, subject to prescriptions concerning national security, and the date shown on this Acknowledgement Receipt will establish the international filing date of the application.

PTOL-413A (09-06)
Approved for use through 03/31/2007. OMB 0651-0031
U.S. Patent and Trademark Office: U.S. DEPARTMENT OF COMMERCE

Applicant Initiated Interview Request Form

Application No.: 10/648,012 First Named Applicant: C. Earl Woolfork
Examiner: Andrew C. Flanders Art Unit: 2615 Status of Application: in appeal

Tentative Participants:
(1) C. Earl Woolfork (2) Megan E. Lyman
(3) Sinh Tran (4)

Proposed Date of Interview: Monday, April 21, 2008 **Proposed Time:** 10:00 (AM/PM)
* or as soon as possible, I may be contacted at 919 341-4023

Type of Interview Requested:
(1) [✓] Telephonic (2) [ ] Personal (3) [ ] Video Conference

Exhibit To Be Shown or Demonstrated: [ ] YES [✓] NO
If yes, provide brief description:

Issues To Be Discussed

Issues (Rej., Obj., etc)	Claims/ Fig. #s	Prior Art	Discussed	Agreed	Not Agreed
(1) 112	Claims 30, 53, 56-58	fuzzy logic descrip	[ ]	[ ]	[ ]
(2) 103(a)	Claims 19-29, 43-52	Lindemann & Sato	[ ]	[ ]	[ ]
(3) 103(a)	Claims 30-32, 53	Lindemann, Sato & Benthin	[ ]	[ ]	[ ]
(4) 103(a)	Claims 54, 55	Lavelle	[ ]	[ ]	[ ]

[✓] Continuation Sheet Attached

Brief Description of Arguments to be Presented:

~~Per MPEP sec. 713.05, "An interview may be appropriate before applicant's first reply when the examiner~~ has suggested that allowable subject matter is present or where it will assist the applicant in judging the propriety of continuing the prosecution." On page 39 of the Examiner's Answer he states that if the ~~specification and claims disclosed and claimed more specifically the fuzzy logic detector, prior art could be~~

An interview was conducted on the above-identified application on _____.
NOTE: This form should be completed by applicant and submitted to the examiner in advance of the interview (see MPEP § 713.01).
This application will not be delayed from issue because of applicant's failure to submit a written record of this interview. Therefore, applicant is advised to file a statement of the substance of this interview (37 CFR 1.133(b)) as soon as possible.

Applicant/Applicant's Representative Signature

Examiner/SPE Signature

Megan E. Lyman
Typed/Printed Name of Applicant or Representative

57, 054
Registration Number, if applicable

This collection of information is required by 37 CFR 1.133. The information is required to obtain or retain a benefit by the public which is to file (and by the USPTO to process) an application. Confidentiality is governed by 35 U.S.C. 122 and 37 CFR 1.11 and 1.14. This collection is estimated to take 21 minutes to complete, including gathering, preparing, and submitting the completed application form to the USPTO. Time will vary depending upon the individual case. Any comments on the amount of time you require to complete this form and/or suggestions for reducing this burden, should be sent to the Chief Information Officer, U.S. Patent and Trademark Office, U.S. Department of Commerce, P.O. Box 1450, Alexandria, VA 22313-1450. DO NOT SEND FEES OR COMPLETED FORMS TO THIS ADDRESS. SEND TO: Commissioner for Patents, P.O. Box 1450, Alexandria, VA 22313-1450.
If you need assistance in completing the form, call 1-800-PTO-9199 and select option 2.

U.S. Patent Application No.: 10/648,012

Attorney Docket No.: 1028.1

IN THE UNITED STATES PATENT AND TRADEMARK OFFICE

In re Application of:	:	Art Unit: 2615
C. Earl Woolfork	:	Examiner: Andrew Flanders
Confirmation No.: 3337	:	Filed: August 26, 2003
For: WIRELESS DIGITAL AUDIO SYSTEM	:	Customer No.: 68533

TRANSMITTAL

Dear Sir:

The Applicant respectfully submits this Continuation Sheet to PTOL-413A: "Applicant Initiated Interview Request Form."

Under Issues to be discussed:

Issue five (5) is a 103(a) rejection of Claims 41 and 42 with the prior art of Lindemann.

Issue six (6) is a 103(a) rejection of Claims 56 and 58 with the prior art of Lavelle and Benthin.

Issue seven (7) is the application as a whole as to whether a continuation or RCE (request for continued examination) should be considered.

Under Brief Description the last sentence should end with:

"prior art could be overcome by modifications. The Applicant respectfully requests this Interview to discuss such changes and potential continuation of the prosecution of this application."

Best Regards,

Megan Lyman, Reg. No. 57,054

Doc code: RCEX
Doc description: Request for Continued Examination (RCE)

PTO/SB/30EFS (03/08)
Approved for use through 04/30/2008. OMB 0651-0031
U.S. Patent and Trademark Office; U.S. DEPARTMENT OF COMMERCE
Under the Paperwork Reduction Act of 1995, no persons are required to respond to a collection of information unless it contains a valid OMB control number.

REQUEST FOR CONTINUED EXAMINATION(RCE)TRANSMITTAL
(Submitted Only via EFS-Web)

Application Number	10/648,012	Filing Date	2003-08-26	Docket Number (if applicable)	1028.1	Art Unit	2615
First Named Inventor	C. Earl Woolfork			Examiner Name	Andrew C. Flanders		

This is a Request for Continued Examination (RCE) under 37 CFR 1.114 of the above-identified application.
Request for Continued Examination (RCE) practice under 37 CFR 1.114 does not apply to any utility or plant application filed prior to June 8, 1995, or to any design application. The Instruction Sheet for this form is located at WWW.USPTO.GOV

SUBMISSION REQUIRED UNDER 37 CFR 1.114

Note: If the RCE is proper, any previously filed unentered amendments and amendments enclosed with the RCE will be entered in the order in which they were filed unless applicant instructs otherwise. If applicant does not wish to have any previously filed unentered amendment(s) entered, applicant must request non-entry of such amendment(s).

☒ Previously submitted. If a final Office action is outstanding, any amendments filed after the final Office action may be considered as a submission even if this box is not checked.

- ☒ Consider the arguments in the Appeal Brief or Reply Brief previously filed on 2007-12-22
- ☐ Other _____

☒ Enclosed

- ☒ Amendment/Reply
- ☐ Information Disclosure Statement (IDS)
- ☐ Affidavit(s)/ Declaration(s)
- ☐ Other _____

MISCELLANEOUS

☐ Suspension of action on the above-identified application is requested under 37 CFR 1.103(c) for a period of months _____
(Period of suspension shall not exceed 3 months; Fee under 37 CFR 1.17(i) required)

☐ Other _____

FEES

☐ **The RCE fee under 37 CFR 1.17(e) is required by 37 CFR 1.114 when the RCE is filed.**
The Director is hereby authorized to charge any underpayment of fees, or credit any overpayments, to Deposit Account No _____

SIGNATURE OF APPLICANT, ATTORNEY, OR AGENT REQUIRED

☒ Patent Practitioner Signature

☐ Applicant Signature

PTO/SB/30EFS (03/08)
Approved for use through 04/30/2008. OMB 0651-0031
U.S. Patent and Trademark Office; U.S. DEPARTMENT OF COMMERCE
Under the Paperwork Reduction Act of 1995, no persons are required to respond to a collection of information unless it contains a valid OMB control number.

Signature of Registered U.S. Patent Practitioner			
Signature	/Megan E. Lyman/	Date (YYYY-MM-DD)	2008-04-29
Name	Megan E. Lyman	Registration Number	57054

This collection of information is required by 37 CFR 1.114. The information is required to obtain or retain a benefit by the public which is to file (and by the USPTO to process) an application. Confidentiality is governed by 35 U.S.C. 122 and 37 CFR 1.11 and 1.14. This collection is estimated to take 12 minutes to complete, including gathering, preparing, and submitting the completed application form to the USPTO. Time will vary depending upon the individual case. Any comments on the amount of time you require to complete this form and/or suggestions for reducing this burden, should be sent to the Chief Information Officer, U.S. Patent and Trademark Office, U.S. Department of Commerce, P.O. Box 1450, Alexandria, VA 22313-1450.

If you need assistance in completing the form, call 1-800-PTO-9199 and select option 2.

Privacy Act Statement

The Privacy Act of 1974 (P.L. 93-579) requires that you be given certain information in connection with your submission of the attached form related to a patent application or patent. Accordingly, pursuant to the requirements of the Act, please be advised that: (1) the general authority for the collection of this information is 35 U.S.C. 2(b)(2); (2) furnishing of the information solicited is voluntary; and (3) the principal purpose for which the information is used by the U.S. Patent and Trademark Office is to process and/or examine your submission related to a patent application or patent. If you do not furnish the requested information, the U.S. Patent and Trademark Office may not be able to process and/or examine your submission, which may result in termination of proceedings or abandonment of the application or expiration of the patent.

The information provided by you in this form will be subject to the following routine uses:

1. The information on this form will be treated confidentially to the extent allowed under the Freedom of Information Act (5 U.S.C. 552) and the Privacy Act (5 U.S.C. 552a). Records from this system of records may be disclosed to the Department of Justice to determine whether the Freedom of Information Act requires disclosure of these record s.

2. A record from this system of records may be disclosed, as a routine use, in the course of presenting evidence to a court, magistrate, or administrative tribunal, including disclosures to opposing counsel in the course of settlement negotiations.

3. A record in this system of records may be disclosed, as a routine use, to a Member of Congress submitting a request involving an individual, to whom the record pertains, when the individual has requested assistance from the Member with respect to the subject matter of the record.

4. A record in this system of records may be disclosed, as a routine use, to a contractor of the Agency having need for the information in order to perform a contract. Recipients of information shall be required to comply with the requirements of the Privacy Act of 1974, as amended, pursuant to 5 U.S.C. 552a(m).

5. A record related to an International Application filed under the Patent Cooperation Treaty in this system of records may be disclosed, as a routine use, to the International Bureau of the World Intellectual Property Organization, pursuant to the Patent Cooperation Treaty.

6. A record in this system of records may be disclosed, as a routine use, to another federal agency for purposes of National Security review (35 U.S.C. 181) and for review pursuant to the Atomic Energy Act (42 U.S.C. 218(c)).

7. A record from this system of records may be disclosed, as a routine use, to the Administrator, General Services, or his/her designee, during an inspection of records conducted by GSA as part of that agency's responsibility to recommend improvements in records management practices and programs, under authority of 44 U.S.C. 2904 and 2906. Such disclosure shall be made in accordance with the GSA regulations governing inspection of records for this purpose, and any other relevant (i.e., GSA or Commerce) directive. Such disclosure shall not be used to make determinations about individuals.

8. A record from this system of records may be disclosed, as a routine use, to the public after either publication of the application pursuant to 35 U.S.C. 122(b) or issuance of a patent pursuant to 35 U.S.C. 151. Further, a record may be disclosed, subject to the limitations of 37 CFR 1.14, as a routine use, to the public if the record was filed in an application which became abandoned or in which the proceedings were terminated and which application is referenced by either a published application, an application open to public inspections or an issued patent.

9. A record from this system of records may be disclosed, as a routine use, to a Federal, State, or local law enforcement agency, if the USPTO becomes aware of a violation or potential violation of law or regulation.

IN THE UNITED STATES PATENT AND TRADEMARK OFFICE

In re Application of:	:	Art Unit: 2615
C. Earl Woolfork	:	Examiner: Andrew Flanders
Confirmation No.: 3337	:	Filed: August 26, 2003
For: WIRELESS DIGITAL AUDIO SYSTEM	:	Customer No.: 68533

Mail Stop RCE
Commissioner for Patents
P.O. Box 1450
Alexandria, VA 22313-1450

REMARKS/AMENDMENT

Dear Sir:

The Applicant respectfully submits this Request for Continued Examination under 37 C.F.R. 1.114 of the above-identified application. Please amend the above-identified application as indicated below.

Amendments to the specification begin on page 2 of this document.

Amendments to the claims are reflected in the listing of claims, which begins on page 5 of this document.

Amendments to the drawings begin on page 21.

Remarks begin on page 22 of this document.

Amendments to the Specification

Please amend paragraph [0003] as follows:

--There are also known wireless headphones that may receive A.M. and F.M. radio transmissions. However, they do not allow use of a simple plug in (i.e., plug in to the existing analog audio headphone jack) battery powered transmitter for connection to any music audio player device jack, such as the above mentioned music audio player devices, for coded wireless transmission and reception by headphones of audio music for private listening ~~to~~ without interference where multiple users occupying the same space are operating wireless transmission devices, ~~without the use of wires~~. Existing audio systems make use of electrical wire connections between the audio source and the headphones to accomplish private listening to multiple users.--

Please amend paragraph [0005] as follows:

--The present invention is generally directed to a wireless digital audio system for coded digital transmission of an audio signal from any audio player with an analog headphone jack to a receiver headphone located away from the audio player. Fuzzy logic technology may be utilized by the system to enhance bit detection. A battery-powered digital transmitter may include a headphone plug in communication with any suitable music audio source. For reception, a battery-powered headphone receiver may use embedded fuzzy logic to enhance user code bit detection. Fuzzy logic detection may be used to enhance user code bit detection during decoding of the transmitted audio signal. The wireless digital audio music system provides private listening without interference from other users or wireless devices and without the use of conventional cable connections.--

Please amend paragraph [010] as follows:

--Particularly, the received spread spectrum signal may be communicated to a 2.4 GHz direct conversion receiver or module 56. Referring to Figures 1 through 4, the spread spectrum modulated signal from transmit antenna 24 may be received by receiving antenna 52 and then processed by spread spectrum direct conversion receiver or module

SONY EXHIBIT 1005 – 0956

56 with a receiver code generator 60 that contains the same transmitted unique code, in the battery powered receiver 50 headphones. The transmitted signal from antenna 24 may be received by receiving antenna 52 and communicated to a wideband bandpass filter (BPF). The battery powered receiver 50 may utilize embedded fuzzy logic 61 (as graphically depicted in Figures 1, 4) to optimize the bit detection of the received user code. The down converted output signal of direct conversion receiver or module 56 may be summed ~~in~~ by receiver summing element 58 with a receiver code generator 60 signal. The receiver code generator 60 may contain the same unique wireless transmission of a signal code word that was transmitted by audio transmitter 20 specific to a particular user. Other code words from wireless digital audio systems 10 may appear as noise to audio receiver 50. This may also be true for other device transmitted wireless signals operating in the wireless digital audio spectrum of digital audio system 10. This code division multiple access (CDMA) may be used to provide each user independent audible enjoyment. The resulting summed digital signal from receiving summary element 58 and direct conversion receiver or module 56 may be processed by a 64-Ary demodulator 62 to demodulate the signal elements modulated in the audio transmitter 20. A block de-interleaver 64 may then decode the bits of the digital signal encoded in the block interleaver 40. Following such, a Viterbi decoder 66 may be used to decode the bits encoded by the channel encoder 38 in audio transmitter 20. A source decoder 68 may further decode the coding applied by encoder 36.--

Please amend paragraph [0011] as follows:

-- Each receiver headphone 50 user may be able to listen (privately) to high fidelity audio music, using any of the audio devices listed previously, without the use of wires, and without interference from any other receiver headphone 50 user, even when operated within a shared space. The fuzzy logic detection technique 61 used in the receiver 50 could provide greater user separation through optimizing code division in the headphone receiver.--

SONY EXHIBIT 1005 – 0957

Please amend paragraph [0017] as follows:

--A wireless digital audio system includes a portable audio source with a digital audio transmitter operatively coupled thereto and an audio receiver operatively coupled to a headphone set. The audio receiver is configured for digital wireless communication with the audio transmitter. The digital audio receiver utilizes fuzzy logic to optimize digital signal processing. Each of the digital audio transmitter and receiver is configured for code division multiple access (CDMA) communication. The wireless digital audio system allows private audio enjoyment without interference from other users ~~or other wireless devices~~ of independent wireless digital transmitters and receivers sharing the same space. ~~And without the inconvenience of wires~~.--

Amendments to the Claims

Please amend the claims as follows:

19. (Currently Amended) A wireless digital audio system comprising:

at least one audio source to produce an audio output ~~representative of music~~;

at least one digital portable audio transmitter operatively coupled to said at least one audio source, said at least one portable audio transmitter comprising:

a first analog low pass filter receiving audio output from said at least one audio source;

a digital low pass filter;

an analog-to-digital converter (ADC) operatively coupled between said first analog and digital low pass filters;

a first encoder receiving output from said digital low pass filter and being configured to reduce intersymbol interference (ISI);

a second channel encoder operatively coupled to said first encoder and adapted to reduce transmission errors;

a digital modulator operatively coupled to said second channel encoder; and

a differential phase shift key (DPSK) module receiving output from said digital modulator and a unique user code bit sequence and being configured for direct sequence spread spectrum (DSSS) communication, said DPSK module transmitting a corresponding DSSS signal having said audio output ~~representative of the music~~ and the unique user code bit sequence;

at least one portable audio receiver configured for digital wireless communication with said at least one portable audio transmitter and utilizing an embedded fuzzy logic detector wherein the fuzzy logic detector activates fuzzy logic rules and performs a defuzzification operation in response to a received user code to optimize digital signal processing, said at least one portable audio receiver comprising:

a band pass filter (BPF) configured to process said transmitted DSSS signal;

a direct conversion module receiving output from said BPF and being

configured to capture the correct unique user code bit sequence embedded in said processed DSSS signal;

a digital demodulator adapted to process output from said direct conversion module;

a Viterbi decoder operatively coupled to said digital demodulator and generating a corresponding digital output;

a source decoder processing said digital output from said Viterbi decoder and being configured to decode the digital signal encoded by said first encoder;

a second analog low pass filter; and

a digital-to-analog converter (DAC) operatively coupled between said source decoder and said second analog low pass filter, said second analog low pass filter generating an audio output ~~representative of the music~~ corresponding to the decoded and converted digital signal; and

at least one module adapted to reproduce said generated audio output ~~representative of said music~~, if the unique user code bit sequence is recognized, said audio output having been wirelessly transmitted from said at least one audio source ~~to a user for private audio reproduction of said music~~ without interference from other users or wireless devices when operated within a shared space containing multiple users of wireless devices utilizing code division multiple access (CDMA) communication.

20. (Previously Presented) The wireless digital audio system of Claim 19, wherein said BPF is a wideband BPF.

21. (Previously Presented) The wireless digital audio system of Claim 19, wherein said modulator is a 64-Ary modulator.

22. (Previously Presented) The wireless digital audio system of Claim 19, wherein said demodulator is a 64-Ary demodulator.

23. (Previously Presented) The wireless digital audio system of Claim 19,

wherein said generated audio output is in the approximate range of 20 Hz to 20 kHz.

24. (Previously Presented) The wireless digital audio system of Claim 19, wherein said spread spectrum signal is transmitted at about 2.4 GHz via an omni-directional antenna.

25. (Previously Presented) The wireless digital audio system of Claim 24, wherein said spread spectrum signal is transmitted at a power of about 100 milliwatts or less.

26. (Previously Presented) The wireless digital audio system of Claim 19, wherein said ADC is a 4-bit analog-to-digital converter.

27. (Cancelled).

28. (Cancelled).

29. (Previously Presented) The wireless digital audio system of Claim 19, wherein said BPF is operatively coupled to at least one antenna configured to receive said transmitted DSSS signal.

30. (Currently Amended) A wireless digital audio system, comprising:

at least one audio source;

at least one portable digital audio transmitter operatively coupled to said at least one audio source, said at least one portable digital audio transmitter comprising:

a first analog low pass filter receiving audio output from said at least one audio source;

a digital low pass filter;

an analog-to-digital converter (ADC) operatively coupled between said first analog and digital low pass filters;

a first encoder receiving output from said digital low pass filter and being

configured to reduce intersymbol interference (ISI);

a second channel encoder operatively coupled to said first encoder and adapted to reduce transmission errors;

a digital modulator operatively coupled to said second channel encoder; and

a differential phase shift key (DPSK) module receiving output from said digital modulator and a unique user code and being configured for direct sequence spread spectrum (DSSS) communication, said DPSK module transmitting a corresponding DSSS signal;

at least one audio receiver configured for digital wireless communication with said at least one portable digital audio transmitter and utilizing embedded fuzzy logic to enhance detection of the unique user code in said transmitted DSSS signal, said at least one audio receiver comprising:

a band pass filter (BPF) configured to process said transmitted DSSS signal;

a direct conversion module receiving output from said BPF and being configured to capture the correct bit sequence embedded in ~~said processed~~ the received DSSS signal;

a digital demodulator adapted to process output from said direct conversion module;

a Viterbi decoder operatively coupled to said digital demodulator and generating a corresponding digital output;

a source decoder processing said digital output from said Viterbi decoder and being configured to decode the digital signal encoded by said first encoder;

a second analog low pass filter; and

a digital-to-analog converter (DAC) operatively coupled between said source decoder and said second analog low pass filter, said second analog low pass filter generating the audio output;

at least one module adapted to reproduce said amplified audio output, if the unique user code is recognized, said audio output having been wirelessly transmitted from said at least one audio source to a user privately without interference from other users or wireless devices when operated in a shared space containing multiple users of wireless devices utilizing code division multiple access (CDMA) communication..

31. (Previously Presented) The wireless digital audio system of Claim 30, wherein said at least one audio amplifying module includes at least one power amplifier, said at least one power amplifier being configured to provide a low distortion audio signal output.

32. (Previously Presented) The wireless digital audio system of Claim 31, wherein said at least one audio reproducing module includes at least one headphone speaker, said at least one headphone speaker receiving said low distortion audio signal output from said at least one power amplifier.

33. (Currently Amended) A wireless digital audio system, comprising:

at least one audio source;

at least one digital audio transmitter operatively coupled to said at least one audio source;

at least one audio receiver adapted for digital wireless communication with said at least one digital audio transmitter, each of said at least one digital audio transmitter and receiver being configured for code division multiple access (CDMA) communication; and

at least one module adapted to audibly reproduce ~~said~~ processed CDMA signal and utilizing an embedded fuzzy logic detector wherein the fuzzy logic detector activates fuzzy logic rules and performs a defuzzification operation in response to a received unique user code to enhance detection of the unique user code, said CDMA communication configuration providing a user with independent audio reproduction operation free of interference from other users or wireless devices when operated in a shared space containing multiple users of wireless transmission devices.

34. (Currently Amended) A wireless digital audio system, comprising:

at least one audio source;

at least one digital audio transmitter operatively coupled to said at least one audio source;

at least one audio receiver adapted for digital wireless communication with said at

least one digital audio transmitter, each of said at least one digital audio transmitter and receiver being configured for code division multiple access (CDMA) communication;

at least one module adapted to amplify ~~said~~ processed CDMA signal; and

at least one module adapted to audibly reproduce said amplified signal, and utilizing an embedded fuzzy logic detector wherein the fuzzy logic detector activates fuzzy logic rules and performs a defuzzification operation in response to a received unique user code to enhance detection of the unique user code, said CDMA communication configuration providing a user with independent audio reproduction operation free of interference from other users or wireless devices when operated in a shared space containing multiple users of wireless transmission devices.

37. (Previously Presented) The wireless digital audio system of Claim 33, wherein said at least one audio source provides analog output in the approximate range of 20 Hz to 20 kHz.

38. (Previously Presented) The wireless digital audio system of Claim 34, wherein said at least one audio source provides analog output in the approximate range of 20 Hz to 20 kHz.

41-42. (Cancelled).

43. (Currently Amended) A wireless digital audio system, comprising:

at least one audio source;

at least one digital audio transmitter operatively coupled to said at least one audio source, said at least one audio transmitter comprising:

a first analog low pass filter receiving audio output representative of music from said at least one audio source;

a digital low pass filter;

an analog-to-digital converter (ADC) operatively coupled between said first analog and digital low pass filters;

a first encoder receiving output from said digital low pass filter and being

configured to reduce intersymbol interference (ISI);

a second channel encoder operatively coupled to said first encoder and adapted to reduce transmission errors;

a digital modulator operatively coupled to said second channel encoder; and

a differential phase shift key (DPSK) module receiving output from said digital modulator and a unique user code bit sequence and being configured for direct sequence spread spectrum (DSSS) communication, said DPSK module transmitting a corresponding DSSS signal;

at least one audio receiver configured for digital wireless communication with said at least one audio transmitter, said at least one audio receiver comprising:

an embedded fuzzy logic detector wherein the fuzzy logic detector activates fuzzy logic rules and performs a defuzzification operation in response to a received unique user code to enhance detection of the unique user code;

a band pass filter (BPF) configured to process said transmitted DSSS signal;

a direct conversion module receiving output from said BPF and being configured to capture the correct unique user code bit sequence embedded in ~~said processed~~ the received DSSS signal;

a digital demodulator adapted to process output from said direct conversion module;

a Viterbi decoder operatively coupled to said digital demodulator and generating a corresponding digital output;

a source decoder processing said digital output from said Viterbi decoder and being configured to decode the digital signal encoded by said first encoder;

a second analog low pass filter; and

a digital-to-analog converter (DAC) operatively coupled between said source decoder and said second analog low pass filter, said second analog low pass filter generating an audio output ~~representative of said music~~ corresponding to the decoded and converted digital signal; and

at least one module adapted to reproduce said generated audio output, if the unique user code bit sequence is recognized, said audio output ~~representative of said music~~ having been wirelessly transmitted from said at least one audio source to a user

privately without interference from other users or wireless devices when operated in a shared space containing multiple users of wireless transmission devices.

44. (Currently Amended) A wireless digital audio system, comprising:

at least one audio source;

at least one digital audio transmitter operatively coupled to said at least one audio source, said at least one audio transmitter comprising:

a first analog low pass filter receiving audio output ~~representative of music~~ from said at least one audio source;

a digital low pass filter;

an analog-to-digital converter (ADC) operatively coupled between said first analog and digital low pass filters;

a first encoder receiving output from said digital low pass filter and being configured to reduce intersymbol interference (ISI);

a second channel encoder operatively coupled to said first encoder and adapted to reduce transmission errors;

a digital modulator operatively coupled to said second channel encoder; and

a differential phase shift key (DPSK) module receiving output from said digital modulator and a unique user code and being configured for direct sequence spread spectrum (DSSS) communication, said DPSK module transmitting a corresponding DSSS signal;

at least one audio receiver configured for digital wireless communication with said at least one audio transmitter, said at least one audio receiver comprising:

an embedded fuzzy logic detector wherein the fuzzy logic detector activates fuzzy logic rules and performs a defuzzification operation in response to a received unique user code to enhance detection of the unique user code;

a band pass filter (BPF) configured to process said transmitted DSSS signal;

a direct conversion module receiving output from said BPF and being configured to capture the correct unique user code bit sequence embedded in ~~said processed~~ the received DSSS signal;

a digital demodulator adapted to process output from said direct conversion

SONY EXHIBIT 1005 – 0966

module;

a Viterbi decoder operatively coupled to said digital demodulator and generating a corresponding digital output;

a source decoder processing said digital output from said Viterbi decoder and being configured to decode the digital signal encoded by said first encoder;

a second analog low pass filter; and

a digital-to-analog converter (DAC) operatively coupled between said source decoder and said second analog low pass filter, said second analog low pass filter generating an audio output ~~representative of the music~~ corresponding to the decoded and converted digital signal;

at least one module adapted to amplify said generated audio output; and

at least one module adapted to reproduce said amplified audio output, if the unique user code is recognized, said audio output having been wirelessly transmitted from said at least one audio source to a user ~~privately~~ without interference from other users or wireless devices when operated in a shared space containing multiple users of wireless transmission devices.

45. (Previously Presented) The wireless digital audio system of Claim 43, wherein said at least one audio source provides analog output in the approximate range of 20 Hz to 20 kHz.

46. (Previously Presented) The wireless digital audio system of Claim 44, wherein said at least one audio source provides analog output in the approximate range of 20 Hz to 20 kHz.

47. (Canceled).

48 (Canceled).

49. (Previously Presented) The wireless digital audio system of Claim 43, wherein said at least one audio source is a portable music player.

50. (Previously Presented) The wireless digital audio system of Claim 44, wherein said at least one audio source is a portable music player.

51. (Previously Presented) A wireless digital audio transmitter, comprising:

a first analog low pass filter receiving audio output representative of music from at least one audio source;

a digital low pass filter;

an analog-to-digital converter (ADC) operatively coupled between said first analog and digital low pass filters;

a first encoder receiving output from said digital low pass filter and being configured to reduce intersymbol interference (ISI);

a second channel encoder operatively coupled to said first encoder and adapted to reduce transmission errors;

a digital modulator operatively coupled to said second channel encoder;

a code generator to add a unique user code to a modulator output, the modulator output including the audio output representative of said music; and a differential phase shift key (DPSK) module receiving the modulator output from said digital modulator and the unique user code and being configured for direct sequence spread spectrum (DSSS) communication, said DPSK module transmitting a corresponding DSSS signal.

52. (Currently Amended) A wireless digital audio receiver, comprising:

a band pass filter (BPF) configured to process a transmitted DSSS signal;

a direct conversion module receiving output from said BPF and being configured to capture a unique user code bit sequence embedded in said processed DSSS signal;

a digital demodulator adapted to process output from said direct conversion module;

a Viterbi decoder operatively coupled to said digital demodulator and generating a corresponding digital output;

a source decoder receiving said digital output from said Viterbi decoder and being configured to decode the digital signal encoded therein;

a second analog low pass filter; and a digital-to-analog converter (DAC) operatively coupled between said source decoder and said second analog low pass filter, said second analog low pass filter generating an audio output representative of music, if the unique user code bit sequence is recognized, corresponding to the decoded and converted digital signal, said audio output having been wirelessly transmitted to a user for private listening of high fidelity audio music without interference from other users or wireless devices when present in a shared space.

53. (Currently Amended) A wireless digital audio receiver comprising:

an embedded fuzzy logic detector wherein the fuzzy logic detector activates fuzzy logic rules and performs a defuzzification operation in response to a received unique user code to enhance detection of the unique user code;

a band pass filter (BPF) configured to process a transmitted DSSS signal;

a direct conversion module receiving output from said BPF and being configured to capture ~~a~~ the correct unique user code bit sequence embedded in ~~said processed~~ the received DSSS signal;

~~a fuzzy logic detector to enhance detection of the unique user code bit sequence;~~

a digital demodulator adapted to process output from said direct conversion module;

a Viterbi decoder operatively coupled to said digital demodulator and generating a corresponding digital output;

a source decoder receiving said digital output from said Viterbi decoder and being configured to decode the digital signal encoded therein;

a second analog low pass filter; and

a digital-to-analog converter (DAC) operatively coupled between said source decoder and said second analog low pass filter, said second analog low pass filter generating an audio output, if the unique user code bit sequence is recognized, corresponding to the decoded and converted digital signal, said audio output having been wirelessly transmitted to a user without interference from other users or wireless devices when operated in a shared space containing multiple users of wireless transmission devices.

SONY EXHIBIT 1005 – 0969

54. (Currently Amended) A wireless digital audio system, comprising:

an audio source to provide an audio signal representative of music having an existing analog headphone ~~plug~~ jack;

a portable battery-powered transmitter coupled to said ~~at least one~~ audio source via said analog headphone ~~plug~~ jack and operative to transmit a code division multiple access (CDMA) communication signal having said audio signal representative of said music and an added unique user code;

a battery-powered audio receiver headphone set operative to receive the CDMA communication signal and utilizing an embedded fuzzy logic detector wherein the fuzzy logic detector activates fuzzy logic rules and performs a defuzzification operation in response to a received unique user code to enhance detection of the unique user code; and audibly reproduce said audio signal representative of said music, if the unique user code is recognized, to provide a particular user with private audio reproduction when operated in a shared space containing other wireless digital audio system users, wherein each of said wireless digital audio system users utilize an independent portable transmitter and audio receiver, free of interference from ~~other~~ users of said other wireless digital audio ~~music~~ systems ~~in a shared space~~.

55. (Currently Amended) A wireless digital audio system, comprising:

an audio source to provide an audio signal representative of music having an existing analog headphone ~~plug~~ jack;

a portable battery-powered transmitter coupled to said ~~at least one~~ audio source via said analog headphone ~~plug~~ jack and operative to transmit a code division multiple access (CDMA) communication signal having a differential phase shift keying (DPSK) modulated signal of said audio signal representative of said music and an added unique user code;

a audio receiver headphone set operative to receive the CDMA communication signal and utilizing an embedded fuzzy logic detector wherein the fuzzy logic detector activates fuzzy logic rules and performs a defuzzification operation in response to a received unique user code that to enhance detection of the unique user code; and audibly

reproduce said audio signal representative of said music, if the unique user code is recognized, to provide a particular user with private audio reproduction ~~of said music~~ when operated in a shared space containing other wireless digital audio system users, wherein each of said wireless digital audio system users utilize an independent portable transmitter and audio receiver, free of interference from ~~other~~ users of said other wireless digital audio ~~music~~ systems ~~in a shared space~~.

56. (Cancelled).

57. (Currently Amended) A wireless digital audio headset receiver, comprising:

a direct conversion module configured to receive a wirelessly transmitted code division multiple access (CDMA) signal having an audio signal representative of audio music and a unique user code; and

utilizing an embedded fuzzy logic detector wherein the fuzzy logic detector activates fuzzy logic rules and performs a defuzzification operation in response to a received unique user code to enhance detection of the unique user code; and headset speakers for privately reproducing said audio music to a user, if the unique user code is recognized, when operated in a shared space containing other wireless digital audio system users, wherein each of said wireless digital audio system users utilize an independent portable transmitter and audio receiver, and free of interference from ~~other~~ users of said other wireless digital audio ~~music~~ systems ~~in a shared space~~ .

58. (Cancelled).

59. (Currently Amended) A code division multiple access (CDMA) portable battery-powered transmitter comprising:

a ~~jack~~ plug to connect to an existing analog headphone ~~plug~~ jack of an audio source;

means for receiving an audio output ~~representative of music~~ from the audio music source;

SONY EXHIBIT 1005 – 0971

means for generating a unique user code that minimizes interference from multiple CDMA transmission sources; and means for wirelessly transmitting a CDMA communication signal having said audio output ~~representative of said music~~ and said unique user code to a wireless headphone receiver, maintaining fidelity between said wireless transmission and said wireless headphone receiver when operated in the presence of separate and independent CDMA transmitters and receivers in a shared space.

60. (New) A wireless digital audio system, comprising:

an audio source to provide an audio signal representative of music;

a portable digital audio transmitter operatively coupled to said audio source, said portable audio transmitter comprising:

a first analog low pass filter receiving audio output from said audio source;

a digital low pass filter;

an analog-to-digital converter (ADC) operatively coupled between said first analog and digital low pass filters;

a first encoder receiving output from said digital low pass filter and being configured to reduce intersymbol interference (ISI);

a second channel encoder operatively coupled to said first encoder and adapted to reduced transmission errors;

a digital modulator operatively coupled to said second channel encoder;

and

a differential phase shift key (DPSK) module receiving output from said digital modulator and being configured for code division multiple access (CDMA) communication, said DPSK module transmitting a corresponding CDMA signal with a unique user code;

an audio receiver configured for digital wireless communication with said portable digital audio transmitter and utilizing an embedded fuzzy logic detector wherein the fuzzy logic detector activates fuzzy logic rules and performs a defuzzification operation in response to a received unique user code to enhance detection of the unique user code, said audio receiver comprising:

SONY EXHIBIT 1005 – 0972

a band pass filter (BPF) configured to process said transmitted CDMA signal;

a direct conversion module receiving output from said BPF and being configured to capture the correct bit sequence embedded in the received spread spectrum signal;

a digital demodulator adapted to process output from said direct conversion module;

a Viterbi decoder operatively coupled to said digital demodulator and generating a corresponding digital output;

a source decoder processing said digital output from said Viterbi decoder and being configured to decode the digital signal encoded by said first encoder;

a second analog low pass filter; and

a digital-to-analog converter (DAC) operatively coupled between said source decoder and said second analog low pass filter, said second analog low pass filter generating an audio output corresponding to the decoded and converted digital signal; and at least one module adapted to reproduce said generated audio output, said audio having been wirelessly transmitted from said audio source virtually free from interference from multiple CDMA transmission sources and other device transmitted signals operating in the wireless digital audio system spectrum to a user providing a particular said audio receiver headphone user with independent audio in a shared space with other wireless digital audio system users, wherein each of said wireless digital audio system users utilize an independent portable transmitter and headphone receiver.

61. (New) A wireless digital audio system, comprising:

a portable audio player;

a portable compact digital transmitter using approximately 100 milliwatts or less of power operatively coupled to said portable audio player wherein said portable compact digital transmitter operatively coupled to said portable audio player is amenable for running;

an audio receiver headphone adapted for digital wireless communication with said portable compact digital transmitter, each of said portable compact digital transmitter and audio receiver headphone being configured for code division multiple access (CDMA) communication;

a direct conversion module configured to capture the correct bit sequence embedded in the received spread spectrum signal; and

a module adapted to audibly reproduce processed CDMA signal, said CDMA communication configuration providing a particular said audio receiver headphone user with independent audio when operated in a shared space with other wireless digital audio system users, wherein each of said wireless digital audio system users utilize an independent portable compact digital transmitter and headphone receiver.

SONY EXHIBIT 1005 – 0974

Amendments to the Drawings

Figure 3 has been amended to include a fuzzy logic subsystem as is well described in the specification. Continuation paragraph [0011] states: "The fuzzy logic detection technique 61 that may be used in the receiver 50 could provide greater user separation through optimizing code division in the headphone receiver." Moreover, Continuation paragraph [0010] discloses "the spread spectrum modulated signal from transmit antenna 24 may be received by receiving antenna 52 and then processed by spread spectrum direct conversion receiver or module 56 with a receiver code generator 60 that contains the same transmitted unique code". Further support for the amendment is found in the Parent application (App. No. 10/027,391) (See Parent ¶ [0014]; ". . . a unique code word that spreads the signal spectrum.") Such amendment demands removal any 35 U.S.C. § 112 rejections for enablement of the instant invention. Because this element is found in both the Parent and instant application's specification, it does not constitute new matter.

ATTACHMENTS: 1 REPLACEMENT SHEET FOR FIGURES 2 AND 3.

SONY EXHIBIT 1005 – 0975

REMARKS

Applicant would like to thank Andrew Flanders for discussing the claims and prosecution of the application on April 24, 2008.

Claims 1-18, 35-36, and 39-40 were previously cancelled in this application. Claims 19-34, 37, 38, and 41-59 stand rejected and have been appealed. Pursuant to 37 C.F.R. 1.114(d) the filing of this Request for Continued Examination removes the instant application from appeal. Claims 19, 30, 33, 34, 43, 44, 52, 53, 54, 55, 57, and 59 have been amended to further clarify the scope of the invention for the reasons set forth below. Claims 27, 28, 41, 42, 47, 48, 56, and 58 have been cancelled without prejudice. Moreover, new Claims 60 and 61 have been added with additional limitations that address the concerns discussed in the Advisory Action of October 11, 2007 and the Examiner's Answer of March 13, 2008.

Arguments made in Applicant's Appeal Brief Filed December 22, 2007

All arguments made in Applicant's Appeal Brief filed December 22, 2007 are herein incorporated by reference as part of this submission under 37 C.F.R. 1.114.

Further Argument Regarding the Rejections Under 35 U.S.C. § 112, first paragraph of Claims 30 and 53

As stated above, all arguments made in Applicant's Appeal Brief filed on December 22, 2007 are incorporated by reference. Moreover, because claims 56 and 58 have been cancelled without prejudice in the instant amendment, the enablement rejection as it applies to Claims 30 and 53 is discussed. This rejection is respectfully traversed.

In order to make a rejection under 35 U.S.C. § 112, first paragraph the examiner has the burden of establishing a reasonable basis to question the enablement provided for the claimed invention. In re Wright, 999 F.2d 1557, 1562 (Fed. Cir. 1993) (examiner must provide a reasonable explanation as to why the scope of protection provided by a claim is not adequately enabled by the disclosure). The evidence of enablement provided by appellant need not be conclusive, it merely needs to be convincing to one skilled in the art. In re Brandstadter, 484 F.2d 1395, 1406-07 (C.C.P.A. 1973). Moreover, "[p]atent

SONY EXHIBIT 1005 – 0976

documents are written for persons familiar with the relevant field; the patentee is not required to include in the specification information readily understood by practitioners . . . ." Verve LLC v. Crane Cams Inc., 311 F.3d 1116, 65 USPQ2d 1051, 1053-54 (Fed. Cir. 2002).

Applicant respectfully asserts that one skilled in the art would know where the fuzzy logic detection sub-system would operate within the present invention (Parent Application No. 10/027,391, hereafter "Parent"; and Continuation-in-Part Application No. 10/648,012, hereafter "Continuation"). Parent paragraph [0014] states "a unique code word that spreads the signal spectrum." Thus, it is clear that the same spread spectrum code word used within transmitter 20 to spread the signal spectrum would be used to despread the spread spectrum signal in receiver 50. As reiterated below in the argument regarding application of the Benthin reference (U.S. Patent No. 5,790,595), correlation occurs prior to carrier, or spread spectrum, demodulation. One skilled in the art would understand that the spreading code word does not exist after the despreading process, therefore, any signal processing (i.e., fuzzy logic operation) that is performed on the unique code word in the receiver must occur prior to the despreading that takes place within the spread spectrum receiver.

Further, Continuation paragraph [0011] states: "The fuzzy logic detection technique 61 that may be used in the receiver 50 could provide greater user separation through optimizing code division in the headphone receiver." This discloses that the application of code division optimization, in the context of the present invention, is applicable to the intended and unintended code words. Moreover, because the code words should not exist after despreading, then the fuzzy logic operations must occur prior to despreading. Thus, one skilled in the art would ascertain, based on the disclosures in the present application, that the fuzzy logic detection sub-system is contained within the direct conversion receiver (Continuation ¶ [0010] "the spread spectrum modulated signal from transmit antenna 24 may be received by receiving antenna 52 and then processed by spread spectrum direct conversion receiver or module 56 with a receiver code generator 60 that contains the same transmitted unique code"; and ¶ [0009] "fuzzy logic detection may be used to optimize reception of the received user code"). Based on the disclosures

in the text of the specification (See id.), Figure 3 has been amended to further demonstrate the placement of the fuzzy logic sub-system (Figure 3; 21).

It is well known by those skilled in the art that a typical direct conversion receiver consists of mixers, amplifiers, filters, analog-to-digital converters and a digital signal processor (DSP). After reviewing the specification, one skilled in the art would realize that the DSP of the direct conversion receiver is host to the fuzzy logic software operations. Fuzzy logic is adequately described and enabled by the specification and drawings. As such any rejection under 35 U.S.C. § 112 is in error and should be removed.

Further Argument Regarding the Rejections Under 35 U.S.C. § 103(a) that Claims 30-32 are Obvious by reference to Lindemann (U.S. Patent Application No. 2004/0223622) in view of Sato (U.S. Patent No. 4,790,637) in view of Benthin (U.S. Patent No. 5,790,595)

As previously outlined, all arguments made in Applicant's Appeal Brief filed on December 22, 2008 are incorporated by reference. Beyond argument made in that filing, Applicant urges that Claims 30-32 cannot be obvious in view of Benthin (U.S. Patent No. 5,790,595) for the following reasons.

Throughout Benthin probability calculations are disclosed (Claims 1, 3, 6, 7; and col. 3 lns. 15, 17-20, 44). By contrast, the present invention discloses fuzzy logic operations (Continuation ¶s [0013]-[0015]). Benthin utilizes probability to deal with the uncertainty of occurrence of well-defined events (Claim 1 " . . . signals representing a defined group of stored data bits; . . ."), whereas the present invention utilizes fuzzy logic to deal with degrees of occurrence of ill-defined events (Continuation ¶ [0009] "fuzzy logic detection may be used to optimize reception of the received user code"; and Parent ¶ [0016] "Other code words from wireless digital audio systems 10 . . . as noise to a particular audio receiver 50"). The intended unique code word sequence of the present invention experiences many ill-defined noise effects due to the wireless channel, some of which include unintended unique code word sequences. The implementation of fuzzy logic aids in suppressing certain noise components allowing a user to listen to music free from interference of other users of similar wireless devices. Benthin cannot accomplish

SONY EXHIBIT 1005 – 0978

this through groups of stored data bits. The combination of Lindemann and Sato neither describes nor suggests to one skilled in the art to create and implement a fuzzy logic subsystem for wireless transmission of music as has been accomplished in the present invention.

Furthermore, Benthin specifically demodulates the carrier (or spread spectrum signal) first and then applies his method (Fig. 1, block 12 and col. 2 lns. 4-5 "The demodulator 11 carries out carrier demodulation and passes the demodulated signal to the computer unit 12"). In contrast, in the present invention (Parent and Continuation) the correct user codeword, embedded within the transmitted spread spectrum signal, is detected prior to carrier, or spread spectrum, demodulation (See Continuation Figure 3, and [0010]). It is well known in the art that spread spectrum signals are pseudorandom and have noise-like properties. Benthin's method is applied to digital information data that typically remains after spread spectrum demodulation, and does not resemble spread spectrum signal characteristics in the wireless channel noise environment. Prior to carrier, or spread spectrum, demodulation the codeword is subjected to the harsh wireless channel noise environment (Parent ¶ [0016] "Other code words from wireless digital audio systems 10 may appear as noise to a particular audio receiver 50. This may also be true for other device transmitted signals operating in the wireless digital audio system 10 spectrum"). Certain harsh wireless channel noise components are not present, at least in its original form, after carrier, or spread spectrum, demodulation in the present invention. Note, "other code words" as described in the Parent are unintended code words (See Parent ¶ [0016]).

Parent paragraph [0014] discloses ". . . a unique code word that spreads the signal spectrum." This clarifies that the unique code word is used to spread the spread spectrum signal in the transmitter. Similarly, the unique code word is utilized within the receiver headphones to despread the spread spectrum signal (See Continuation ¶ [0010]). It is well known by those skilled in the art, that the despreading takes place within the spread spectrum correlator. The spread spectrum correlator in a spread spectrum receiver is the point at which interference (or noise) signals due to other code words are not permitted to pass. Within the present invention, the unique user codeword specific to a particular user is detected out of other code words from wireless digital audio systems 10 prior to spread

spectrum demodulation (See Continuation ¶ [0010]). As is well known, correlation occurs prior to spread spectrum (or carrier) demodulation within the receiver. So, as any person skilled in the art would deduce, any signal processing applied to the unique code word must take place before the despreading because the code word does not exist after despreading of the spread spectrum (or carrier) signal.

The present invention detects the intended unique user code word, out of noise causing unintended unique user code words, prior to spread spectrum demodulation (Continuation ¶ [0010]: "Other code words from wireless digital audio systems 10 may appear as noise to the audio receiver 50). The process aids in suppressing interference from other wireless digital audio system users (i.e. other unintended unique code words). Benthin's system does not, and can not, account for unintended spread spectrum code words because, as stated previously, despreading by code word correlation has already taken place prior to spread spectrum demodulation. Benthin is silent in regards to selecting an intended unique code word (that spreads the signal spectrum) prior to spread spectrum demodulation while the intended unique code word is subjected to noise from other unintended unique code words. Therefore, for at least the reasons stated, Benthin does not teach fuzzy logic detection, nor teach fuzzy logic detection, prior to spread spectrum demodulation, of a unique user spreading code word in the presence of noise due to other unique user code words. The limitations of Benthin do not make the instant invention a mere change in form, or degree; the present invention has solved a problem with a novel solution, and cannot be obvious in light of Benthin, Lindemann and Sato. Smith v. Nichols, 88 U.S. 112, 118-119 (1875). Moreover because of both the argument above, and that Lindemann and Sato cannot be combined with Benthin to obviate Claims 30-32 of the present invention, the rejection should be removed.

Support for Amendments to the Specification

Amendments to the specification do not constitute new matter and further support the removal of any rejections under 35 U.S.C. § 112, first paragraph for failing to comply with the enablement requirement. For example, the amendment in paragraph [0003] finds support from paragraph [0016] of the Parent specification (". . . may also be true for other device transmitted signals operating in the wireless digital audio system 10

spectrum.") Further support for the amendment is found in the same paragraph ([0016] of the Parent): "Other code words from wireless digital audio systems 10 . . . to a particular audio receiver 50," because it follows the logic from Parent paragraph [[0014] stating " . . . a unique code word that spreads the signal spectrum" that any code word (that spreads the signal spectrum) from any other wireless digital audio system 10 that is seen by the receiver 50 is transmitted by another transmitter 20. The amendment to paragraph [0010] of the instant application to include "other device transmitted" uses the same support and is not new matter.

The amendment to paragraph [0010] of the instant application to include the "direct conversion receiver or module 56" is not new matter. Support for this insertion is clearly found in the Parent (¶ [0015] "The received spread spectrum signal may then be communicated to a 2.4 GHz direct conversion receiver 56. The direct conversion receiver 56 may provide a method for down converting the received signal . . . ."). Thus, this amendment contains no new matter.

Moreover, the amendment to paragraph [0011] adding the language to include operation of the present invention in a shared space is clearly supported in the prosecution history of the instant application (See ¶ [0004] of the instant application as filed: "There is a need for a battery powered simple connection system for existing audio player devices, to allow wireless transmission to a headphone receiver that accomplishes private listening to multiple users occupying the same space."). The above insertion does nothing more than emphasizes the advantages of the present invention that have already been disclosed and described, it is not new matter.

The amendments made to paragraph [0018] are similarly supported. The additional language describing the present invention's ability to provide a user with independent music listening in the presence of multiple independent digital transmitters and receivers in the same shared space is supported (See id.). This language further emphasizes and describes the novelty and application of the instant invention and does not constitute new matter.

In sum, none of the amendments made to the specification constitute new matter. Each amendment is supported by either or both the Parent application or the instant application, either in its present form or in the prosecution history. These amendments

SONY EXHIBIT 1005 – 0981

have been made for the purpose of further disclosing and describing the novelty and advantages of the present invention and should be allowed. These amendments further substantiate the need to remove previous rejections for failing to comply with the enablement requirement under 35 U.S.C. § 112, first paragraph.

Amendments to the Claims and Additional Claims are Not New Matter and Overcome Rejections for (1) Failing to Comply with the Enablement Requirement under 35 U.S.C. § 112, first paragraph, (2) Anticipation under 35 U.S.C. § 102(e), and for (3) Obviousness under 35 U.S.C. § 103(a)

Amendments to the Claims and Addition of Claims 60 and 61 are Not New Matter

Claims 19, 30, 33, 34, 43, 44, 52-55, 57, and 59 have been amended. Claims 60 and 61 have been added to the instant application. The amendments further disclose the present invention and are supported by the specification and drawings of the Parent and Continuation of this application. Specifically, Claims 19, 33, 34, 43, 44, 53-55, 57 and new Claim 60 describe "utilizing an embedded fuzzy logic detector wherein the fuzzy logic detector activates fuzzy logic rules and performs a defuzzification operation in response to a received unique user code to enhance detection of the unique user code". This language is derived specifically from the instant application (See Continuation ¶ [0005]: "Fuzzy logic detection may be used to enhance user code bit detection during decoding of the transmitted audio signal."; ¶ [0013]: "The fuzzy logic detection sub-system 61 may measure the degree to which a high/low bit occurs in the user code vector, which produces a low probability of bit error in the presence of noise. The fuzzy logic detection sub-system 61 may use a set of if-then rules to map the user code bit inputs to validation outputs."; See also Figure 3, 61). This additional language is well-supported.

Claims 19, 30, 33, 34, 43, 44, 52-55, 57, 59 and new Claims 60 and 61 contain language directed to the present invention's ability to maintain independent music transmission and reception when operated in a shared space containing similar devices. This language is clearly supported by the instant application (See ¶ [0005]: "provides private listening without interference from other users or wireless devices"; See ¶ [0003] of the instant application as filed on August 26, 2003: "for wireless transmission and

reception of audio music for private listening to multiple users occupying the same space."). The amendments described above are not new matter and should be entered.

(1) Amendments to Claims 30 and 53 Further Support Removal of the Rejection for Failing to Comply with the Enablement Requirement under 35 U.S.C. § 112, first paragraph

Claims 30 and 53 currently stand rejected under 35 U.S.C. § 112, first paragraph as nonenabling. In addition to the arguments provided in the Appeal Brief filed December 22, 2007, and the arguments asserted above in these Remarks, the amendments made to these Claims further support the removal of this rejection. Claims 30 and 53 as amended clearly disclose and claim that the operation of the present invention allows a user independent listening of music in the presence of other users of wireless transmitters and receivers. Claim 53 contains the well-supported language describing the functioning of the fuzzy logic sub-system. Although Applicant has clearly disclosed and described the fuzzy logic system such that one of ordinary skill in the art would be able to practice the invention without such amendment (see argument above and in the Appeal Brief pgs. 22-24), these amendments further show enablement. The rejection for nonenablement should be removed.

(2) Amendments to Claims 33 and 34 Further Compels Removal of the Rejection under 35 U.S.C. § 102(e)

Claims 33 and 34 have been rejected as anticipated by Lindemann. In order for a claim to be anticipated by prior art, each of the claimed elements must be taught. W.L. Gore & Assocs. V. Garlock, Inc., 721 F.2d 1540, 220 USPQ 303, 313 (Fed. Cir. 1983). Applicant maintains the argument previously presented and especially those contained in the Appeal Brief. Moreover, the amendments made in this submission further disclose the fuzzy logic sub-system. Because Lindemann does not teach this element, the rejection should be removed.

(3) Amendments to Claims 43 and 52 Further Requires Removal of the Rejection for Obviousness under 35 U.S.C. § 103(a) of Lindemann in view of Sato

Claims 43 and 52 stand rejected as obvious in view of Lindemann and Sato. In addition to the arguments previously made, and in particular those presented in the Appeal Brief, the instant amendments to Claims 43 and 52 further describe and disclose

the ability of the present invention to provide a user with independent music reproduction with a wireless transmitter and receiver while in the presence of other wireless transmitters and receivers occupying the same shared space. Lindemann's ability to provide users independent listening in separate rooms and Sato's anti-aliasing filter would not lead one skilled in the art to develop Applicant's present invention. The mechanisms and use of the cited prior art and the instant application are disparate and further necessitate the removal of the rejection of Claims 43 and 52.

Amendments to Claim 53 Further Necessitates Removal of the Rejection for Obviousness under 35 U.S.C. § 103(a) of Lindemann in view of Sato in view of Benthin

In addition to the argument above for the removal of Benthin, and the argument contained in the Appeal Brief, amendment of Claim 53 further removes any rejection under 35 U.S.C. § 103(a). Neither Lindemann, Sato, nor Benthin anticipate or even suggest the use of a fuzzy logic sub-system that performs a defuzzification operation, which allows the operation of the present invention in a shared space with multiple users of wireless devices. The rejection should be removed.

Amendments to Claims 54, 55, 57, and 59 Further Dictates the Removal of the Rejection for Obviousness under 35 U.S.C. § 103(a) of Lavelle

In addition to arguments previously made and contained within the Appeal Brief, amendments to Claims 54, 55, 57 and 59 further urge the removal of the obviousness rejection. The amendments further disclose and describe the implementation of the fuzzy logic sub-system and the present invention's functionality within a shared space with other wireless device users. Because Lavelle does not suggest such operation, the rejection should be removed.

SONY EXHIBIT 1005 – 0984

Conclusion

In view of the arguments supplied in the Appeal Brief, and in these Remarks, it is respectfully requested that all amendments be entered, and that the rejections be reversed.

Respectfully Submitted,

Megan E. Lyman, Registration No. 57, 054 Date: April 29, 2008
Lyman Patent Services
1816 Silver Mist Ct.
Raleigh, NC 27613
(919) 341-4023
(919) 341-0271 (fax)
melyman@lymanpatents.com

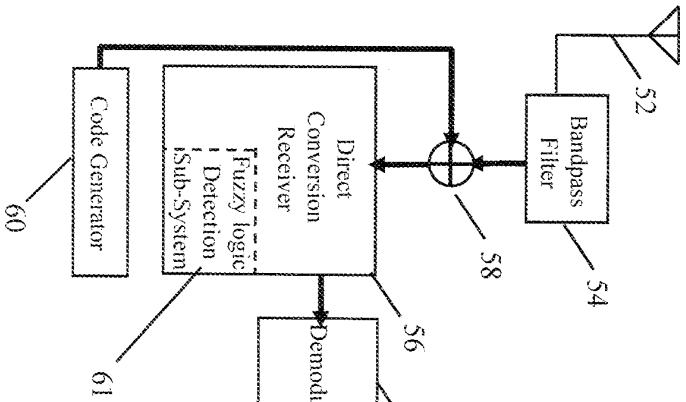
Bandpass Filter
Direct Conversion Receiver
Fuzzy logic
Detection
Sub-System
Code Generator
Demodulator
De-interleaver
Viterbi Decoder
Source Decoder
DAC
Analog Low Pass Filter
Power Amplifier
Headphone Speaker(s)
52
54
56
58
60
61
62
64
66
68
70
72
74
75

FIG. 3

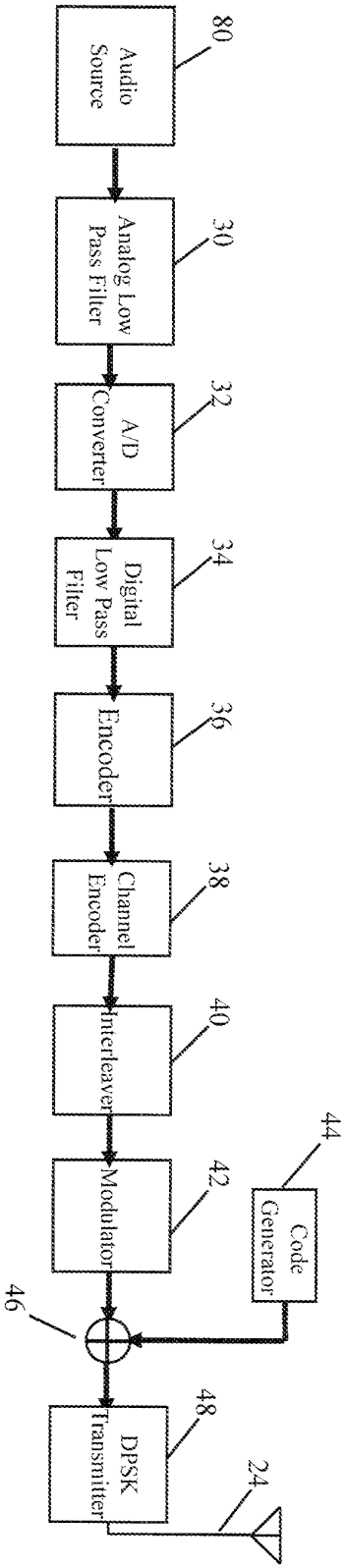
Audio Source
Analog Low Pass Filter
A/D Converter
Digital Low Pass Filter
Encoder
Channel Encoder
Interleaver
Modulator
Code Generator
DPSK Transmitter
80
30
32
34
36
38
40
42
44
46
48
24

FIG. 2

Electronic Patent Application Fee Transmittal

Application Number:	10648012
Filing Date:	26-Aug-2003
Title of Invention:	WIRELESS DIGITAL AUDIO SYSTEM
First Named Inventor/Applicant Name:	C. Earl Woolfork
Filer:	Megan Elizabeth Lyman
Attorney Docket Number:	W003-4000
Filed as Small Entity	

Utility Filing Fees

Description	Fee Code	Quantity	Amount	Sub-Total in USD($)
Basic Filing:				
Pages:				
Claims:				
Independent claims in excess of 3	2201	2	105	210
Miscellaneous-Filing:				
Petition:				
Patent-Appeals-and-Interference:				
Post-Allowance-and-Post-Issuance:				
Extension-of-Time:				

Description	Fee Code	Quantity	Amount	Sub-Total in USD($)
Miscellaneous:				
Request for continued examination	2801	1	405	405
		Total in USD ($)		**615**

Electronic Acknowledgement Receipt

EFS ID:	3223955
Application Number:	10648012
International Application Number:	
Confirmation Number:	3337
Title of Invention:	WIRELESS DIGITAL AUDIO SYSTEM
First Named Inventor/Applicant Name:	C. Earl Woolfork
Customer Number:	68533
Filer:	Megan Elizabeth Lyman
Filer Authorized By:	
Attorney Docket Number:	W003-4000
Receipt Date:	29-APR-2008
Filing Date:	26-AUG-2003
Time Stamp:	12:18:55
Application Type:	Utility under 35 USC 111(a)

Payment information:

Submitted with Payment	yes
Payment Type	Credit Card
Payment was successfully received in RAM	$615
RAM confirmation Number	7711
Deposit Account	
Authorized User	

File Listing:

Document Number	Document Description	File Name	File Size(Bytes) /Message Digest	Multi Part /.zip	Pages (if appl.)

1	Request for Continued Examination (RCE)	RCEform042908Final.pdf	703393 bcb20488065c0275172f7315a5352751a552f4f0	no	3
Warnings:					
Information:					
2	Amendment Submitted/Entered with Filing of CPA/RCE	RCE042908.pdf	1179414 b5a35c0819e1cfcd417754c6d8f71cc4893f052c	no	32
Warnings:					
Information:					
3	Fee Worksheet (PTO-06)	fee-info.pdf	8312 d29a0e41b8b6ec80f312f5c988bd481cb841fbf5	no	2
Warnings:					
Information:					
		Total Files Size (in bytes):	1891119		

This Acknowledgement Receipt evidences receipt on the noted date by the USPTO of the indicated documents, characterized by the applicant, and including page counts, where applicable. It serves as evidence of receipt similar to a Post Card, as described in MPEP 503.

New Applications Under 35 U.S.C. 111
If a new application is being filed and the application includes the necessary components for a filing date (see 37 CFR 1.53(b)-(d) and MPEP 506), a Filing Receipt (37 CFR 1.54) will be issued in due course and the date shown on this Acknowledgement Receipt will establish the filing date of the application.

National Stage of an International Application under 35 U.S.C. 371
If a timely submission to enter the national stage of an international application is compliant with the conditions of 35 U.S.C. 371 and other applicable requirements a Form PCT/DO/EO/903 indicating acceptance of the application as a national stage submission under 35 U.S.C. 371 will be issued in addition to the Filing Receipt, in due course.

New International Application Filed with the USPTO as a Receiving Office
If a new international application is being filed and the international application includes the necessary components for an international filing date (see PCT Article 11 and MPEP 1810), a Notification of the International Application Number and of the International Filing Date (Form PCT/RO/105) will be issued in due course, subject to prescriptions concerning national security, and the date shown on this Acknowledgement Receipt will establish the international filing date of the application.

PTO/SB/06 (07-06)
Approved for use through 1/31/2007. OMB 0651-0032
U.S. Patent and Trademark Office; U.S. DEPARTMENT OF COMMERCE
Under the Paperwork Reduction Act of 1995, no persons are required to respond to a collection of information unless it displays a valid OMB control number.

PATENT APPLICATION FEE DETERMINATION RECORD

Substitute for Form PTO-875

Application or Docket Number	Filing Date	☐ To be Mailed
10/648,012	08/26/2003	

APPLICATION AS FILED – PART I

	(Column 1)	(Column 2)	SMALL ENTITY ☒		OR	OTHER THAN SMALL ENTITY	
FOR	NUMBER FILED	NUMBER EXTRA	RATE ($)	FEE ($)		RATE ($)	FEE ($)
☐ BASIC FEE (37 CFR 1.16(a), (b), or (c))	N/A	N/A	N/A			N/A	
☐ SEARCH FEE (37 CFR 1.16(k), (i), or (m))	N/A	N/A	N/A			N/A	
☐ EXAMINATION FEE (37 CFR 1.16(o), (p), or (q))	N/A	N/A	N/A			N/A	
TOTAL CLAIMS (37 CFR 1.16(i))	minus 20 =	*	X $ =		OR	X $ =	
INDEPENDENT CLAIMS (37 CFR 1.16(h))	minus 3 =	*	X $ =			X $ =	
☐ APPLICATION SIZE FEE (37 CFR 1.16(s))	If the specification and drawings exceed 100 sheets of paper, the application size fee due is $250 ($125 for small entity) for each additional 50 sheets or fraction thereof. See 35 U.S.C. 41(a)(1)(G) and 37 CFR 1.16(s).						
☐ MULTIPLE DEPENDENT CLAIM PRESENT (37 CFR 1.16(j))							
* If the difference in column 1 is less than zero, enter "0" in column 2.			TOTAL			TOTAL	

APPLICATION AS AMENDED – PART II

		(Column 1)		(Column 2)	(Column 3)	SMALL ENTITY		OR	OTHER THAN SMALL ENTITY	
AMENDMENT	04/29/2008	CLAIMS REMAINING AFTER AMENDMENT		HIGHEST NUMBER PREVIOUSLY PAID FOR	PRESENT EXTRA	RATE ($)	ADDITIONAL FEE ($)		RATE ($)	ADDITIONAL FEE ($)
	Total (37 CFR 1.16(i))	* 37	Minus	** 48	= 0	X $25 =	0	OR	X $ =	
	Independent (37 CFR 1.16(h))	* 13	Minus	***19	= 0	X $105 =	0	OR	X $ =	
	☐ Application Size Fee (37 CFR 1.16(s))									
	☐ FIRST PRESENTATION OF MULTIPLE DEPENDENT CLAIM (37 CFR 1.16(j))							OR		
						TOTAL ADD'L FEE	0	OR	TOTAL ADD'L FEE	

		(Column 1)		(Column 2)	(Column 3)					
AMENDMENT		CLAIMS REMAINING AFTER AMENDMENT		HIGHEST NUMBER PREVIOUSLY PAID FOR	PRESENT EXTRA	RATE ($)	ADDITIONAL FEE ($)		RATE ($)	ADDITIONAL FEE ($)
	Total (37 CFR 1.16(i))	*	Minus	**	=	X $ =		OR	X $ =	
	Independent (37 CFR 1.16(h))	*	Minus	***	=	X $ =		OR	X $ =	
	☐ Application Size Fee (37 CFR 1.16(s))									
	☐ FIRST PRESENTATION OF MULTIPLE DEPENDENT CLAIM (37 CFR 1.16(j))							OR		
						TOTAL ADD'L FEE		OR	TOTAL ADD'L FEE	

* If the entry in column 1 is less than the entry in column 2, write "0" in column 3.

** If the "Highest Number Previously Paid For" IN THIS SPACE is less than 20, enter "20".

*** If the "Highest Number Previously Paid For" IN THIS SPACE is less than 3, enter "3".

The "Highest Number Previously Paid For" (Total or Independent) is the highest number found in the appropriate box in column 1.

Legal Instrument Examiner:
/LAWANDA MILTON/

This collection of information is required by 37 CFR 1.16. The information is required to obtain or retain a benefit by the public which is to file (and by the USPTO to process) an application. Confidentiality is governed by 35 U.S.C. 122 and 37 CFR 1.14. This collection is estimated to take 12 minutes to complete, including gathering, preparing, and submitting the completed application form to the USPTO. Time will vary depending upon the individual case. Any comments on the amount of time you require to complete this form and/or suggestions for reducing this burden, should be sent to the Chief Information Officer, U.S. Patent and Trademark Office, U.S. Department of Commerce, P.O. Box 1450, Alexandria, VA 22313-1450. DO NOT SEND FEES OR COMPLETED FORMS TO THIS ADDRESS. **SEND TO: Commissioner for Patents, P.O. Box 1450, Alexandria, VA 22313-1450.**

If you need assistance in completing the form, call 1-800-PTO-9199 and select option 2.

IN THE UNITED STATES PATENT AND TRADEMARK OFFICE

In re Application of:	Art Unit: 2615
C. Earl Woolfork	Examiner: Andrew Flanders
Confirmation No.: 3337	Filed: August 26, 2003
For: WIRELESS DIGITAL AUDIO SYSTEM	Customer No.: 68533

Mail Stop AF
Commissioner for Patents
P.O. Box 1450
Alexandria, VA 22313-1450

TRANSMITTAL

Dear Sir:

The Applicant respectfully submits this Interview Summary conducted between Mr. Flanders, Mr. Woolfork, and Ms. Lyman on May 20, 2008 at 11 a.m. regarding the above-identified application. The Summary begins on page 2.

SONY EXHIBIT 1005 – 0992

IN THE UNITED STATES PATENT AND TRADEMARK OFFICE

In re Application of:	Art Unit: 2615
C. Earl Woolfork	Examiner: Andrew Flanders
Confirmation No.: 3337	Filed: August 26, 2003
For: WIRELESS DIGITAL AUDIO SYSTEM	Customer No.: 68533

Mail Stop AF
Commissioner for Patents
P.O. Box 1450
Alexandria, VA 22313-1450

SUMMARY OF EXAMINER INTERVIEW

The interview was held at 11:00 a.m. on May 20, 2008 by telephone. Mr. Andrew Flanders, Mr. C. Earl Woolfork, and Ms. Megan Lyman were all present. The Applicant appreciates the courtesy extended by Mr. Flanders during the interview.

A. Discussion of Amendments to the Claims further disclosing the Fuzzy Logic Subsystem and Amendment to Figure 3 locating the Fuzzy Logic Subsystem within the Direct Conversion Receiver

Amendments to the Claims and Drawings submitted in the Request for Continued Examination, filed April 29, 2008, were discussed. In Particular, in Claim 53, the additional language relating to the implementation of the fuzzy logic subsystem was discussed. It can be noted that similar amendments were made to Claims 19, 33, 34, 43, 44, 53, 54, 55, 57, and language contained in newly submitted Claim 61 in the above-named RCE. Examiner Flanders raised concerns regarding whether such amendment was supported by the specification. This coincided with a similar concern regarding the amendment to Figure 3, also contained within the RCE, which places the fuzzy logic subsystem within the direct conversion receiver. This led to a discussion both regarding support for the fuzzy logic subsystem in the Parent (App. No. 10/027,391) and the

SONY EXHIBIT 1005 – 0993

Continuation application, and to whether one skilled in the art would be aware that the fuzzy logic subsystem would be located within the direct conversion receiver.

1. Support for the Fuzzy Logic Subsystem being Located Within the Direct Conversion Receiver

Mr. Woolfork identified support for the fuzzy logic subsystem's location in multiple areas. Moreover, the RCE submission cites support from the Continuation and Parent application for the location of the fuzzy logic subsystem. During the interview, Parent ¶ [0014] was identified as supporting the amendments ("and a unique code word spreads the signal spectrum."). Paragraph [0015] of the Parent was also discussed as further support ("The direct conversion receiver **56** may provide a method for down converting the received signal while utilizing timing and synchronization to capture the correct bit sequence embedded in the received spread spectrum signal.").

2. Discussion Regarding One Skilled in the Art Would Know Where the Fuzzy Logic Subsystem Would be Located

In general, as discussed and is well known in the art, spread spectrum communication occurs via the transmission of data through a channel (a wireless channel) by use of a code word sequence that spreads the signal spectrum, and then receipt of the transmitted data is by use of the identical code word sequence that serves to despread the signal spectrum in the receiver. The despreading takes place within the correlator of the spread spectrum receiver. Due to the harsh wireless channel environment, the correlator can process an unintended code word, which will cause interference. To prevent this type of interference, it is important to capture the intended code word sequence prior to digital demodulation.

Following the above rationale, the fuzzy logic subsystem would have to be located within the direct conversion receiver (DCR), and it would be apparent to one skilled in the art. Moreover by looking at Figure 3, the band pass filter passes the appropriate frequencies and then the DCR that follows has a DSP inside, the intended spread spectrum signal must be despread before any other action may occur. After the signal is despread, there is

SONY EXHIBIT 1005 – 0994

no need for the unique user code. Because the fuzzy logic system assists in maintaining fidelity between the transmitted and received signal, it must be located in a position before the signal is despread. The signal must be despread in order to get the data, as is apparent to one skilled in the art. As disclosed in paragraph [0011] of the Continuation, the fuzzy logic system allows for greater user separation between the transmitter and receiver of a particular user and the transmitter and receiver of any other user(s); it optimizes code division. The operation of the present invention uses the same code generated in both the receiver and transmitter with some added delay due to propagation through the channel. As is known in the art, some code design must be involved with low cross correlation properties. This must be done so that the system does not compare to another code, otherwise the codes look the same and interference is present. The fuzzy logic subsystem identifies the proper code and minimizes interference from other codes present in the vicinity. Examiner Flanders agreed to review the amendments to the Claims, as well as new Claim 61 and Figure 3 with this in mind.

B. Claim 61: Claiming an Intended Use; Running

The parties also discussed new Claim 61, presented in the above-named RCE. The claim, directed to the apparatus, discloses the invention's use while the operator is running. The Examiner expressed initial concern regarding the use environment, suggesting that the Claim would be in a better position for allowance if re-written as a method claim, perhaps using language such as "activated during a run" would be helpful. The presence of the running limitation would not be anticipated by Lavelle (U.S. Patent No. 6,678,892), which discloses an entertainment system for use in a vehicle. It was agreed that a proposed amendment to Claim 61 would be generated for further review.

C. General Outcome

The interview was helpful to all parties. Examiner Flander's suggestions were well-taken, and his patience and effort during the interview were very much appreciated. The Examiner's concerns regarding amendments to the Claims named above, and Figure 3 were addressed, as well as putative concerns regarding new Claim 61. Mr. Woolfork was able to provide further explanation regarding the fuzzy logic subsystem, a principal

SONY EXHIBIT 1005 – 0995

aspect of his invention. The applicant wishes to thank Mr. Flander's for his time and effort.

Respectfully Submitted,

Megan E. Lyman
Registration No. 57,054
Lyman Patent Services
1816 Silver Mist Ct.
Raleigh, NC 27613
Phone (919) 341-4023
Fax: (919) 341-0271
melyman@lymanpatents.com

Date: May 21, 2008

SONY EXHIBIT 1005 – 0996

Electronic Acknowledgement Receipt

EFS ID:	3338860
Application Number:	10648012
International Application Number:	
Confirmation Number:	3337
Title of Invention:	WIRELESS DIGITAL AUDIO SYSTEM
First Named Inventor/Applicant Name:	C. Earl Woolfork
Customer Number:	68533
Filer:	Megan Elizabeth Lyman
Filer Authorized By:	
Attorney Docket Number:	1028.1
Receipt Date:	21-MAY-2008
Filing Date:	26-AUG-2003
Time Stamp:	16:56:17
Application Type:	Utility under 35 USC 111(a)

Payment information:

Submitted with Payment	no

File Listing:

Document Number	Document Description	File Name	File Size(Bytes) /Message Digest	Multi Part /.zip	Pages (if appl.)
1	Applicant summary of interview with examiner	InterviewSummary.pdf	133262 6b6d3d899397e8a3d90116f57629ce9d7476dac5	no	5

Warnings:	
Information:	

Total Files Size (in bytes):	133262

This Acknowledgement Receipt evidences receipt on the noted date by the USPTO of the indicated documents, characterized by the applicant, and including page counts, where applicable. It serves as evidence of receipt similar to a Post Card, as described in MPEP 503.

New Applications Under 35 U.S.C. 111
If a new application is being filed and the application includes the necessary components for a filing date (see 37 CFR 1.53(b)-(d) and MPEP 506), a Filing Receipt (37 CFR 1.54) will be issued in due course and the date shown on this Acknowledgement Receipt will establish the filing date of the application.

National Stage of an International Application under 35 U.S.C. 371
If a timely submission to enter the national stage of an international application is compliant with the conditions of 35 U.S.C. 371 and other applicable requirements a Form PCT/DO/EO/903 indicating acceptance of the application as a national stage submission under 35 U.S.C. 371 will be issued in addition to the Filing Receipt, in due course.

New International Application Filed with the USPTO as a Receiving Office
If a new international application is being filed and the international application includes the necessary components for an international filing date (see PCT Article 11 and MPEP 1810), a Notification of the International Application Number and of the International Filing Date (Form PCT/RO/105) will be issued in due course, subject to prescriptions concerning national security, and the date shown on this Acknowledgement Receipt will establish the international filing date of the application.

IN THE UNITED STATES PATENT AND TRADEMARK OFFICE

In re Application of:	Art Unit: 2615
C. Earl Woolfork	Examiner: Andrew Flanders
Confirmation No.: 3337	Filed: August 26, 2003
For: WIRELESS DIGITAL AUDIO SYSTEM	Customer No.: 68533

Mail Stop Amendment
Commissioner for Patents
P.O. Box 1450
Alexandria, VA 22313-1450

TRANSMITTAL

Dear Sir:

The Applicant respectfully submits this Supplemental Amendment to Claim 61, which was first presented in the Request for Continued Examination filed April 29, 2008. The amendment to this Claim begins on page 2.

In the event that any additional fees are due, the Commissioner is hereby authorized charge any such fees to Deposit Account No. 50-4576.

SONY EXHIBIT 1005 – 0999

AMENDMENT TO CLAIM 61

This listing of Claim 61 will replace all prior versions, and listings, of Claim 61 in the application.

61. (Currently Amended) ~~A wireless digital audio system comprising:~~ A method for listening to a wireless digital audio system while running comprising:

connecting a headphone plug attached to a portable compact digital transmitter to a portable audio player to remain therewith for activating said wireless digital audio system while running, said wireless digital audio system, comprising:

~~a~~ said portable audio player;

~~a~~ said portable compact digital transmitter using approximately 100 milliwatts or less of power operatively coupled to said portable audio player wherein said portable compact digital transmitter operatively coupled to said portable audio player;

an audio receiver headphone adapted for digital wireless communication with said portable compact digital transmitter, each of said portable compact digital transmitter and audio receiver headphone being configured for code division multiple access (CDMA) communication;

a direct conversion module configured to capture the correct bit sequence embedded in the received spread spectrum signal; and

a module adapted to audibly reproduce processed CDMA signal, said CDMA communication configuration providing a particular said audio receiver headphone user with independent audio when operated in a shared space with other wireless digital audio system users, wherein each of said wireless digital audio system users utilize an independent portable compact digital transmitter and headphone receiver.

Respectfully Submitted,

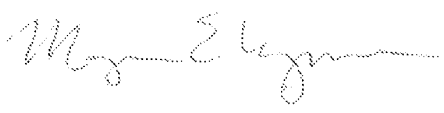

Date: May 22, 2008

Megan E. Lyman
Registration No. 57,054
Lyman Patent Services
1816 Silver Mist Ct.
Raleigh, NC 27613
Phone (919) 341-4023
Fax: (919) 341-0271

SONY EXHIBIT 1005 – 1000

Electronic Acknowledgement Receipt

EFS ID:	3342661
Application Number:	10648012
International Application Number:	
Confirmation Number:	3337
Title of Invention:	WIRELESS DIGITAL AUDIO SYSTEM
First Named Inventor/Applicant Name:	C. Earl Woolfork
Customer Number:	68533
Filer:	Megan Elizabeth Lyman
Filer Authorized By:	
Attorney Docket Number:	1028.1
Receipt Date:	22-MAY-2008
Filing Date:	26-AUG-2003
Time Stamp:	12:31:50
Application Type:	Utility under 35 USC 111(a)

Payment information:

Submitted with Payment	no

File Listing:

Document Number	Document Description	File Name	File Size(Bytes) /Message Digest	Multi Part /.zip	Pages (if appl.)
1	Supplemental Response or Supplemental Amendment	SupplementaAmendmentClaim61.pdf	99135 a50ede638c43e6b9be416afbb84c443a5c479ca4	no	2

Warnings:	
Information:	

Total Files Size (in bytes):	99135

This Acknowledgement Receipt evidences receipt on the noted date by the USPTO of the indicated documents, characterized by the applicant, and including page counts, where applicable. It serves as evidence of receipt similar to a Post Card, as described in MPEP 503.

New Applications Under 35 U.S.C. 111
If a new application is being filed and the application includes the necessary components for a filing date (see 37 CFR 1.53(b)-(d) and MPEP 506), a Filing Receipt (37 CFR 1.54) will be issued in due course and the date shown on this Acknowledgement Receipt will establish the filing date of the application.

National Stage of an International Application under 35 U.S.C. 371
If a timely submission to enter the national stage of an international application is compliant with the conditions of 35 U.S.C. 371 and other applicable requirements a Form PCT/DO/EO/903 indicating acceptance of the application as a national stage submission under 35 U.S.C. 371 will be issued in addition to the Filing Receipt, in due course.

New International Application Filed with the USPTO as a Receiving Office
If a new international application is being filed and the international application includes the necessary components for an international filing date (see PCT Article 11 and MPEP 1810), a Notification of the International Application Number and of the International Filing Date (Form PCT/RO/105) will be issued in due course, subject to prescriptions concerning national security, and the date shown on this Acknowledgement Receipt will establish the international filing date of the application.

UNITED STATES PATENT AND TRADEMARK OFFICE

UNITED STATES DEPARTMENT OF COMMERCE
United States Patent and Trademark Office
Address: COMMISSIONER FOR PATENTS
P.O. Box 1450
Alexandria, Virginia 22313-1450
www.uspto.gov

NOTICE OF ALLOWANCE AND FEE(S) DUE

68533 7590 06/16/2008

MEGAN LYMAN
1816 SILVER MIST CT.
RALEIGH, NC 27613

EXAMINER	
FLANDERS, ANDREW C	
ART UNIT	PAPER NUMBER
2615	

DATE MAILED: 06/16/2008

APPLICATION NO.	FILING DATE	FIRST NAMED INVENTOR	ATTORNEY DOCKET NO.	CONFIRMATION NO.
10/648,012	08/26/2003	C. Earl Woolfork	1028.1	3337

TITLE OF INVENTION: WIRELESS DIGITAL AUDIO SYSTEM

APPLN. TYPE	SMALL ENTITY	ISSUE FEE DUE	PUBLICATION FEE DUE	PREV. PAID ISSUE FEE	TOTAL FEE(S) DUE	DATE DUE
nonprovisional	YES	$720	$0	$0	$720	09/16/2008

THE APPLICATION IDENTIFIED ABOVE HAS BEEN EXAMINED AND IS ALLOWED FOR ISSUANCE AS A PATENT. PROSECUTION ON THE MERITS IS CLOSED. THIS NOTICE OF ALLOWANCE IS NOT A GRANT OF PATENT RIGHTS. THIS APPLICATION IS SUBJECT TO WITHDRAWAL FROM ISSUE AT THE INITIATIVE OF THE OFFICE OR UPON PETITION BY THE APPLICANT. SEE 37 CFR 1.313 AND MPEP 1308.

THE ISSUE FEE AND PUBLICATION FEE (IF REQUIRED) MUST BE PAID WITHIN THREE MONTHS FROM THE MAILING DATE OF THIS NOTICE OR THIS APPLICATION SHALL BE REGARDED AS ABANDONED. THIS STATUTORY PERIOD CANNOT BE EXTENDED. SEE 35 U.S.C. 151. THE ISSUE FEE DUE INDICATED ABOVE DOES NOT REFLECT A CREDIT FOR ANY PREVIOUSLY PAID ISSUE FEE IN THIS APPLICATION. IF AN ISSUE FEE HAS PREVIOUSLY BEEN PAID IN THIS APPLICATION (AS SHOWN ABOVE), THE RETURN OF PART B OF THIS FORM WILL BE CONSIDERED A REQUEST TO REAPPLY THE PREVIOUSLY PAID ISSUE FEE TOWARD THE ISSUE FEE NOW DUE.

HOW TO REPLY TO THIS NOTICE:

I. Review the SMALL ENTITY status shown above.

If the SMALL ENTITY is shown as YES, verify your current SMALL ENTITY status:

A. If the status is the same, pay the TOTAL FEE(S) DUE shown above.

B. If the status above is to be removed, check box 5b on Part B - Fee(s) Transmittal and pay the PUBLICATION FEE (if required) and twice the amount of the ISSUE FEE shown above, or

If the SMALL ENTITY is shown as NO:

A. Pay TOTAL FEE(S) DUE shown above, or

B. If applicant claimed SMALL ENTITY status before, or is now claiming SMALL ENTITY status, check box 5a on Part B - Fee(s) Transmittal and pay the PUBLICATION FEE (if required) and 1/2 the ISSUE FEE shown above.

II. PART B - FEE(S) TRANSMITTAL, or its equivalent, must be completed and returned to the United States Patent and Trademark Office (USPTO) with your ISSUE FEE and PUBLICATION FEE (if required). If you are charging the fee(s) to your deposit account, section "4b" of Part B - Fee(s) Transmittal should be completed and an extra copy of the form should be submitted. If an equivalent of Part B is filed, a request to reapply a previously paid issue fee must be clearly made, and delays in processing may occur due to the difficulty in recognizing the paper as an equivalent of Part B.

III. All communications regarding this application must give the application number. Please direct all communications prior to issuance to Mail Stop ISSUE FEE unless advised to the contrary.

IMPORTANT REMINDER: Utility patents issuing on applications filed on or after Dec. 12, 1980 may require payment of maintenance fees. It is patentee's responsibility to ensure timely payment of maintenance fees when due.

PTOL-85 (Rev. 08/07) Approved for use through 08/31/2010.

SONY EXHIBIT 1005 – 1003

PART B - FEE(S) TRANSMITTAL

Complete and send this form, together with applicable fee(s), to: Mail **Mail Stop ISSUE FEE**
Commissioner for Patents
P.O. Box 1450
Alexandria, Virginia 22313-1450
or Fax (571)-273-2885

INSTRUCTIONS: This form should be used for transmitting the ISSUE FEE and PUBLICATION FEE (if required). Blocks 1 through 5 should be completed where appropriate. All further correspondence including the Patent, advance orders and notification of maintenance fees will be mailed to the current correspondence address as indicated unless corrected below or directed otherwise in Block 1, by (a) specifying a new correspondence address; and/or (b) indicating a separate "FEE ADDRESS" for maintenance fee notifications.

CURRENT CORRESPONDENCE ADDRESS (Note: Use Block 1 for any change of address)

68533 7590 06/16/2008

MEGAN LYMAN
1816 SILVER MIST CT.
RALEIGH, NC 27613

Note: A certificate of mailing can only be used for domestic mailings of the Fee(s) Transmittal. This certificate cannot be used for any other accompanying papers. Each additional paper, such as an assignment or formal drawing, must have its own certificate of mailing or transmission.

Certificate of Mailing or Transmission

I hereby certify that this Fee(s) Transmittal is being deposited with the United States Postal Service with sufficient postage for first class mail in an envelope addressed to the Mail Stop ISSUE FEE address above, or being facsimile transmitted to the USPTO (571) 273-2885, on the date indicated below.

(Depositor's name)
(Signature)
(Date)

APPLICATION NO.	FILING DATE	FIRST NAMED INVENTOR	ATTORNEY DOCKET NO.	CONFIRMATION NO.
10/648,012	08/26/2003	C. Earl Woolfork	1028.1	3337

TITLE OF INVENTION: WIRELESS DIGITAL AUDIO SYSTEM

APPLN. TYPE	SMALL ENTITY	ISSUE FEE DUE	PUBLICATION FEE DUE	PREV. PAID ISSUE FEE	TOTAL FEE(S) DUE	DATE DUE
nonprovisional	YES	$720	$0	$0	$720	09/16/2008

EXAMINER	ART UNIT	CLASS-SUBCLASS
FLANDERS, ANDREW C	2615	700-094000

1. Change of correspondence address or indication of "Fee Address" (37 CFR 1.363).

❑ Change of correspondence address (or Change of Correspondence Address form PTO/SB/122) attached.

❑ "Fee Address" indication (or "Fee Address" Indication form PTO/SB/47; Rev 03-02 or more recent) attached. **Use of a Customer Number is required.**

2. For printing on the patent front page, list

(1) the names of up to 3 registered patent attorneys or agents OR, alternatively,

(2) the name of a single firm (having as a member a registered attorney or agent) and the names of up to 2 registered patent attorneys or agents. If no name is listed, no name will be printed.

1 _____

2 _____

3 _____

3. ASSIGNEE NAME AND RESIDENCE DATA TO BE PRINTED ON THE PATENT (print or type)

PLEASE NOTE: Unless an assignee is identified below, no assignee data will appear on the patent. If an assignee is identified below, the document has been filed for recordation as set forth in 37 CFR 3.11. Completion of this form is NOT a substitute for filing an assignment.

(A) NAME OF ASSIGNEE (B) RESIDENCE: (CITY and STATE OR COUNTRY)

Please check the appropriate assignee category or categories (will not be printed on the patent) : ❑ Individual ❑ Corporation or other private group entity ❑ Government

4a. The following fee(s) are submitted:

❑ Issue Fee

❑ Publication Fee (No small entity discount permitted)

❑ Advance Order - # of Copies _____

4b. Payment of Fee(s): **(Please first reapply any previously paid issue fee shown above)**

❑ A check is enclosed.

❑ Payment by credit card. Form PTO-2038 is attached.

❑ The Director is hereby authorized to charge the required fee(s), any deficiency, or credit any overpayment, to Deposit Account Number _____ (enclose an extra copy of this form).

5. **Change in Entity Status** (from status indicated above)

❑ a. Applicant claims SMALL ENTITY status. See 37 CFR 1.27.

❑ b. Applicant is no longer claiming SMALL ENTITY status. See 37 CFR 1.27(g)(2).

NOTE: The Issue Fee and Publication Fee (if required) will not be accepted from anyone other than the applicant; a registered attorney or agent; or the assignee or other party in interest as shown by the records of the United States Patent and Trademark Office.

Authorized Signature _____ Date _____

Typed or printed name _____ Registration No. _____

This collection of information is required by 37 CFR 1.311. The information is required to obtain or retain a benefit by the public which is to file (and by the USPTO to process) an application. Confidentiality is governed by 35 U.S.C. 122 and 37 CFR 1.14. This collection is estimated to take 12 minutes to complete, including gathering, preparing, and submitting the completed application form to the USPTO. Time will vary depending upon the individual case. Any comments on the amount of time you require to complete this form and/or suggestions for reducing this burden, should be sent to the Chief Information Officer, U.S. Patent and Trademark Office, U.S. Department of Commerce, P.O. Box 1450, Alexandria, Virginia 22313-1450. DO NOT SEND FEES OR COMPLETED FORMS TO THIS ADDRESS. SEND TO: Commissioner for Patents, P.O. Box 1450, Alexandria, Virginia 22313-1450.

Under the Paperwork Reduction Act of 1995, no persons are required to respond to a collection of information unless it displays a valid OMB control number.

SONY EXHIBIT 1005 – 1004

UNITED STATES PATENT AND TRADEMARK OFFICE

UNITED STATES DEPARTMENT OF COMMERCE
United States Patent and Trademark Office
Address: COMMISSIONER FOR PATENTS
P.O. Box 1450
Alexandria, Virginia 22313-1450
www.uspto.gov

APPLICATION NO.	FILING DATE	FIRST NAMED INVENTOR	ATTORNEY DOCKET NO.	CONFIRMATION NO.
10/648,012	08/26/2003	C. Earl Woolfork	1028.1	3337

68533 7590 06/16/2008

MEGAN LYMAN
1816 SILVER MIST CT.
RALEIGH, NC 27613

EXAMINER	
FLANDERS, ANDREW C	
ART UNIT	PAPER NUMBER
2615	

DATE MAILED: 06/16/2008

Determination of Patent Term Adjustment under 35 U.S.C. 154 (b)
(application filed on or after May 29, 2000)

The Patent Term Adjustment to date is 199 day(s). If the issue fee is paid on the date that is three months after the mailing date of this notice and the patent issues on the Tuesday before the date that is 28 weeks (six and a half months) after the mailing date of this notice, the Patent Term Adjustment will be 199 day(s).

If a Continued Prosecution Application (CPA) was filed in the above-identified application, the filing date that determines Patent Term Adjustment is the filing date of the most recent CPA.

Applicant will be able to obtain more detailed information by accessing the Patent Application Information Retrieval (PAIR) WEB site (http://pair.uspto.gov).

Any questions regarding the Patent Term Extension or Adjustment determination should be directed to the Office of Patent Legal Administration at (571)-272-7702. Questions relating to issue and publication fee payments should be directed to the Customer Service Center of the Office of Patent Publication at 1-(888)-786-0101 or (571)-272-4200.

PTOL-85 (Rev. 08/07) Approved for use through 08/31/2010.

SONY EXHIBIT 1005 – 1005

Notice of Allowability	Application No.	Applicant(s)	
	10/648,012	WOOLFORK, C. EARL	
	Examiner	Art Unit	
	ANDREW C. FLANDERS	2615	

-- The MAILING DATE of this communication appears on the cover sheet with the correspondence address--

All claims being allowable, PROSECUTION ON THE MERITS IS (OR REMAINS) CLOSED in this application. If not included herewith (or previously mailed), a Notice of Allowance (PTOL-85) or other appropriate communication will be mailed in due course. **THIS NOTICE OF ALLOWABILITY IS NOT A GRANT OF PATENT RIGHTS.** This application is subject to withdrawal from issue at the initiative of the Office or upon petition by the applicant. See 37 CFR 1.313 and MPEP 1308.

1. ☒ This communication is responsive to *the interview on 20 May 2008*.

2. ☒ The allowed claim(s) is/are *19-26,29-32,43,44,45,46,49,50 and 60*.

3. ☐ Acknowledgment is made of a claim for foreign priority under 35 U.S.C. § 119(a)-(d) or (f).
   a) ☐ All b) ☐ Some* c) ☐ None of the:
      1. ☐ Certified copies of the priority documents have been received.
      2. ☐ Certified copies of the priority documents have been received in Application No. _____ .
      3. ☐ Copies of the certified copies of the priority documents have been received in this national stage application from the International Bureau (PCT Rule 17.2(a)).

   * Certified copies not received: _____.

Applicant has THREE MONTHS FROM THE "MAILING DATE" of this communication to file a reply complying with the requirements noted below. Failure to timely comply will result in ABANDONMENT of this application.
THIS THREE-MONTH PERIOD IS NOT EXTENDABLE.

4. ☐ A SUBSTITUTE OATH OR DECLARATION must be submitted. Note the attached EXAMINER'S AMENDMENT or NOTICE OF INFORMAL PATENT APPLICATION (PTO-152) which gives reason(s) why the oath or declaration is deficient.

5. ☐ CORRECTED DRAWINGS (as "replacement sheets") must be submitted.
   (a) ☐ including changes required by the Notice of Draftsperson's Patent Drawing Review (PTO-948) attached
      1) ☐ hereto or 2) ☐ to Paper No./Mail Date _____.
   (b) ☐ including changes required by the attached Examiner's Amendment / Comment or in the Office action of Paper No./Mail Date _____.

   Identifying indicia such as the application number (see 37 CFR 1.84(c)) should be written on the drawings in the front (not the back) of each sheet. Replacement sheet(s) should be labeled as such in the header according to 37 CFR 1.121(d).

6. ☐ DEPOSIT OF and/or INFORMATION about the deposit of BIOLOGICAL MATERIAL must be submitted. Note the attached Examiner's comment regarding REQUIREMENT FOR THE DEPOSIT OF BIOLOGICAL MATERIAL.

Attachment(s)

1. ☐ Notice of References Cited (PTO-892)
2. ☐ Notice of Draftperson's Patent Drawing Review (PTO-948)
3. ☐ Information Disclosure Statements (PTO/SB/08), Paper No./Mail Date _____
4. ☐ Examiner's Comment Regarding Requirement for Deposit of Biological Material
5. ☐ Notice of Informal Patent Application
6. ☐ Interview Summary (PTO-413), Paper No./Mail Date _____ .
7. ☒ Examiner's Amendment/Comment
8. ☒ Examiner's Statement of Reasons for Allowance
9. ☐ Other _____.

/Suhan Ni/
Primary Examiner, Art Unit 2615

EXAMINER'S AMENDMENT

An examiner's amendment to the record appears below. Should the changes and/or additions be unacceptable to applicant, an amendment may be filed as provided by 37 CFR 1.312. To ensure consideration of such an amendment, it MUST be submitted no later than the payment of the issue fee.

Authorization for this examiner's amendment was given in a telephone interview with Megan Lyman on 02 June 2008.

The application has been amended as follows:

Please cancel claims 33, 34, 37, 38, 51, 52, 53, 54, 55, 57, 59 and 61.

30. (Currently Amended) A wireless digital audio system, comprising:

at least one audio source;

at least one portable digital audio transmitter operatively coupled to said at least one audio source, said at least one portable digital audio transmitter comprising:

a first analog low pass filter receiving audio output from said at least one audio source;

a digital low pass filter;

an analog-to-digital converter (ADC) operatively coupled between said first analog and digital low pass filters;

a first encoder receiving output from said digital low pass filter and being configured to reduce intersymbol interference (ISI);

a second channel encoder operatively coupled to said first encoder and adapted to reduce transmission errors;

a digital modulator operatively coupled to said second channel encoder; and

a differential phase shift key (DPSK) module receiving output from said digital modulator and a unique user code and being configured for direct sequence spread spectrum (DSSS) communication, said DPSK module transmitting a corresponding DSSS signal;

at least one audio receiver configured for digital wireless communication with said at least one portable digital audio transmitter and utilizing embedded fuzzy logic detector wherein the fuzzy logic detector activates fuzzy logic rules and performs a defuzzification operation in response to a received unique user code to enhance detection of the unique user code ~~to enhance detection of the unique user code~~ in said transmitted DSSS signal, said at least one audio receiver comprising:

a band pass filter (BPF) configured to process said transmitted DSSS signal;

a direct conversion module receiving output from said BPF and being configured to capture the correct bit sequence embedded in the received DSSS signal;

a digital demodulator adapted to process output from said direct conversion module;

a Viterbi decoder operatively coupled to said digital demodulator and generating

a corresponding digital output;

a source decoder processing said digital output from said Viterbi decoder and being configured to decode the digital signal encoded by said first encoder;

a second analog low pass filter; and

a digital-to-analog converter (DAC) operatively coupled between said source decoder and said second analog low pass filter, said second analog low pass filter generating the audio output;

at least one module adapted to reproduce said amplified audio output, if the unique user code is recognized, said audio output having been wirelessly transmitted from said at least one audio source to a user privately without interference from other users or wireless devices when operated in a shared space containing multiple users of wireless devices utilizing code division multiple access (CDMA) communication.

60. (New) A wireless digital audio system, comprising: an audio source to provide an audio signal representative of music;

a portable digital audio transmitter operatively coupled to said audio source, said portable audio transmitter comprising:

a first analog low pass filter receiving audio output from said audio source; a digital low pass filter;

an analog-to-digital converter (ADC) operatively coupled between said first analog and digital low pass filters;

a first encoder receiving output from said digital low pass filter and being configured to reduce intersymbol interference (ISI);

a second channel encoder operatively coupled to said first encoder and adapted to reduced transmission errors;

a digital modulator operatively coupled to said second channel encoder;

and

a differential phase shift key (DPSK) module receiving output from said digital modulator and being configured for code division multiple access (CDMA) communication, said DPSK module transmitting a corresponding CDMA signal with a unique user code;

an audio receiver configured for digital wireless communication with said portable digital audio transmitter and utilizing an embedded fuzzy logic detector wherein the fuzzy logic detector activates fuzzy logic rules and performs a defuzzification operation in response to a received unique user code to enhance detection of the unique user code, said audio receiver comprising:

a band pass filter (BPF) configured to process said transmitted CDMA signal;

a direct conversion module receiving output from said BPF and being configured to capture the correct bit sequence embedded in the received spread spectrum signal;

a digital demodulator adapted to process output from said direct conversion module;

a Viterbi decoder operatively coupled to said digital demodulator and generating a corresponding digital output;

a source decoder processing said digital output from said Viterbi decoder and being configured to decode the digital signal encoded by said first encoder;

a second analog low pass filter; and

a digital-to-analog converter (DAC) operatively coupled between said source decoder and said second analog low pass filter, said second analog low pass filter generating an audio output corresponding to the decoded and converted digital signal; and at least one module adapted to reproduce said generated audio output, said audio having been wirelessly transmitted from said audio source ~~virtually~~ free from interference from multiple CDMA transmission sources and other device transmitted signals operating in the wireless digital audio system spectrum to a user providing a particular said audio receiver headphone user with independent audio in a shared space with other wireless digital audio system users, wherein each of said wireless digital audio system users utilize an independent portable transmitter and headphone receiver.

Allowable Subject Matter

Claims 19 – 26, 29 - 32, 43,44, 45, 46, 49, 50 and 60 are allowed.

The following is an examiner's statement of reasons for allowance:

Claims 19, 30, 43, 44 and 60 are allowable for the reasons stated in Applicant's remarks filed 29 April 2008.

Any comments considered necessary by applicant must be submitted no later than the payment of the issue fee and, to avoid processing delays, should preferably accompany the issue fee. Such submissions should be clearly labeled "Comments on Statement of Reasons for Allowance."

Conclusion

Any inquiry concerning this communication or earlier communications from the examiner should be directed to ANDREW C. FLANDERS whose telephone number is (571)272-7516. The examiner can normally be reached on M-F 8:30 - 5:00.

If attempts to reach the examiner by telephone are unsuccessful, the examiner's supervisor, Suhan Ni can be reached on (571) 272-7505. The fax phone number for the organization where this application or proceeding is assigned is 571-273-8300.

Information regarding the status of an application may be obtained from the Patent Application Information Retrieval (PAIR) system. Status information for published applications may be obtained from either Private PAIR or Public PAIR. Status information for unpublished applications is available through Private PAIR only. For more information about the PAIR system, see http://pair-direct.uspto.gov. Should you have questions on access to the Private PAIR system, contact the Electronic Business Center (EBC) at 866-217-9197 (toll-free). If you would like assistance from a USPTO Customer Service Representative or access to the automated information system, call 800-786-9199 (IN USA OR CANADA) or 571-272-1000.

/Andrew C Flanders/
Patent Examiner
Art Unit 2615

/Suhan Ni/

Primary Examiner, Art Unit 2615

EAST Search History

Ref #	Hits	Search Query	DBs	Default Operator	Plurals	Time Stamp
L1	22	"fuzzy logic" and modulat$5 and filter and (dpsk "phase shift key")	US-PGPUB; USPAT	OR	OFF	2008/06/06 09:20
L2	0	"455".clas. and "375".clas. and l1	US-PGPUB; USPAT	OR	OFF	2008/06/06 09:21
S1	9	FHSS with unique with user	US-PGPUB; USPAT	OR	OFF	2007/03/20 09:30
S2	6	S1 and @ad<"20011221"	US-PGPUB; USPAT	OR	OFF	2006/05/02 17:45
S3	0	FHSS with unique adj hop	US-PGPUB; USPAT	OR	OFF	2006/05/02 17:46
S4	0	FHSS with each adj user	US-PGPUB; USPAT	OR	OFF	2006/05/02 17:46
S5	0	FHSS with individual adj user	US-PGPUB; USPAT	OR	OFF	2006/05/02 17:47
S6	0	(FHSS or "frequency hopping spread spectrum") with individual adj user	US-PGPUB; USPAT	OR	OFF	2006/05/02 17:47
S7	0	(FHSS or "frequency hopping spread spectrum") near user same unique	US-PGPUB; USPAT	OR	OFF	2006/05/02 17:47
S8	9	(FHSS or "frequency hopping spread spectrum") with user same unique	US-PGPUB; USPAT	OR	OFF	2006/05/02 17:48
S9	17	(FHSS or "frequency hopping spread spectrum") same unique same user	US-PGPUB; USPAT	OR	OFF	2006/05/02 17:48
S10	6	S9 and @ad<"20011221"	US-PGPUB; USPAT	OR	OFF	2006/05/02 17:48
S11	9	(FHSS or "frequency hopping spread spectrum") same multiple adj user!	US-PGPUB; USPAT	OR	OFF	2006/05/03 10:32
S12	91	(FHSS or "frequency hopping spread spectrum") same (pn or "hopping code")	US-PGPUB; USPAT	OR	OFF	2006/05/02 17:50
S13	13	(FHSS or "frequency hopping spread spectrum") with ("hopping code")	US-PGPUB; USPAT	OR	OFF	2006/05/02 17:50
S14	3	S13 and @ad<"20011221"	US-PGPUB; USPAT	OR	OFF	2006/05/02 17:51
S15	1	("5946343").PN.	US-PGPUB; USPAT	OR	OFF	2006/05/03 11:46

SONY EXHIBIT 1005 – 1014

S16	1	("6342844").PN.	US-PGPUB; USPAT	OR	OFF	2006/05/03 11:46
S17	1	("5771441").PN.	US-PGPUB; USPAT	OR	OFF	2006/08/28 15:55
S18	10725	"rechargeable battery" and @ad<"20011220"	US-PGPUB; USPAT	OR	OFF	2006/08/28 15:55
S19	376	"rechargeable battery".ti. and @ad<"20011220"	US-PGPUB; USPAT	OR	OFF	2006/08/28 15:55
S20	17	("rechargeable battery" and portable).ti. and @ad<"20011220"	US-PGPUB; USPAT	OR	OFF	2006/08/28 15:57
S21	3623043	("rechargeable battery" and portable) with mah andd @ad<"20011220"	US-PGPUB; USPAT	OR	OFF	2006/08/28 15:57
S22	0	("rechargeable battery" and portable) with mah and @ad<"20011220"	US-PGPUB; USPAT	OR	OFF	2006/08/28 15:57
S23	3623041	("rechargeable battery" and portable) with ma-h andd @ad<"20011220"	US-PGPUB; USPAT	OR	OFF	2006/08/28 15:57
S24	3623041	("rechargeable battery" and portable) with "ma-h" andd @ad<"20011220"	US-PGPUB; USPAT	OR	OFF	2006/08/28 15:57
S25	0	("rechargeable battery" and portable) with "ma-h" and @ad<"20011220"	US-PGPUB; USPAT	OR	OFF	2006/08/28 15:57
S26	640693	("rechargeable battery" and portable) with milliamp hours and @ad<"20011220"	US-PGPUB; USPAT	OR	OFF	2006/08/28 15:57
S27	18	("rechargeable battery" and portable) and "milliamp hours" and @ad<"20011220"	US-PGPUB; USPAT	OR	OFF	2006/08/31 12:17
S28	29	"5491839"	US-PGPUB; USPAT	OR	OFF	2006/08/30 12:56
S29	1	("5491839").PN.	US-PGPUB; USPAT	OR	OFF	2006/08/30 12:56
S30	1	("5771441").PN.	US-PGPUB; USPAT	OR	OFF	2006/08/30 12:56
S31	1	("6,107,147").PN.	US-PGPUB; USPAT	OR	OFF	2006/08/31 12:17
S32	0	("10648012").PN.	US-PGPUB; USPAT	OR	OFF	2006/09/25 09:26
S33	1	("5946343").PN.	US-PGPUB; USPAT	OR	OFF	2006/09/25 09:50
S34	422	(455/564.1,412,413).CCLS.	US-PGPUB; USPAT	OR	OFF	2006/09/25 09:50

SONY EXHIBIT 1005 – 1015

S35	5294	(375/219,295-297,346,348).CCLS.	US-PGPUB; USPAT	OR	OFF	2006/09/25 10:02
S36	1	("20040223622").PN.	US-PGPUB; USPAT	OR	OFF	2006/09/25 10:04
S37	1	("5946343").PN.	US-PGPUB; USPAT	OR	OFF	2006/09/25 10:05
S38	1	("7,050,419").PN.	US-PGPUB; USPAT	OR	OFF	2007/03/20 09:32
S39	1	("20010025358").PN.	US-PGPUB; USPAT	OR	OFF	2007/03/20 09:37
S40	2618	(375/341,140,147).CCLS.	US-PGPUB; USPAT	OR	OFF	2007/03/20 09:37
S41	1807	S40 and @ad<"20011220"	US-PGPUB; USPAT	OR	OFF	2007/03/20 09:38
S42	8	("2001/0025358").URPN.	USPAT	OR	OFF	2007/03/20 09:51
S43	0	("2002/0025009").URPN.	USPAT	OR	OFF	2007/03/20 09:59
S44	0	("2002/0025009").URPN.	USPAT	OR	OFF	2007/03/20 10:01
S45	12	("20020159543" | "5434623" | "5867532" | "5973642" | "6243423" | "6327314" | "6339612" | "6459728" | "6477210" | "6480554" | "6654429" | "6671338").PN. OR ("7099413").URPN.	US-PGPUB; USPAT; USOCR	OR	OFF	2007/03/20 10:08
S46	74	"band pass" and demodulator and interleaver and "viterbi decoder"	US-PGPUB; USPAT; USOCR	OR	OFF	2007/03/20 10:08
S47	59	S46 and @ad<"20011220"	US-PGPUB; USPAT; USOCR	OR	OFF	2007/03/20 10:08
S48	17	("4278978" | "4635063" | "5175558" | "5493307").PN. OR ("6130643").URPN.	US-PGPUB; USPAT; USOCR	OR	OFF	2007/03/20 10:15
S49	1	("5175558").PN.	US-PGPUB; USPAT	OR	OFF	2007/03/20 10:16
S50	13	("4651155" | "4931977").PN. OR ("5175558").URPN.	US-PGPUB; USPAT; USOCR	OR	OFF	2007/03/20 10:34
S51	1	("5946343").PN.	US-PGPUB; USPAT	OR	OFF	2007/03/20 11:40
S52	7186	(375/295,146,130,340,316,148).CCLS.	US-PGPUB; USPAT	OR	OFF	2007/03/20 11:41

SONY EXHIBIT 1005 – 1016

S53	4473	S52 and @ad<"20011220"	US-PGPUB; USPAT	OR	OFF	2007/03/20 11:41
S54	1	("20040223622").PN.	US-PGPUB; USPAT	OR	OFF	2007/03/21 12:11
S55	5	"reed solomon" with "intersymbol interference"	US-PGPUB; USPAT	OR	OFF	2007/03/21 12:13
S56	30	"reed solomon" same "intersymbol interference"	US-PGPUB; USPAT	OR	OFF	2007/03/21 12:13
S57	21	S56 and @ad<"20011220"	US-PGPUB; USPAT	OR	OFF	2007/03/21 12:27
S58	1	("20030045235").PN.	US-PGPUB; USPAT	OR	OFF	2007/03/21 12:37
S59	1	("5790595").PN.	US-PGPUB; USPAT	OR	OFF	2007/03/21 12:37
S60	2435	((375/262,265,341) or (714/794,795)).CCLS.	US-PGPUB; USPAT	OR	OFF	2007/03/24 09:15
S62	56	"375".clas. and "fuzzy logic"	US-PGPUB; USPAT	OR	OFF	2007/03/26 11:04
S64	1	("4970637").PN.	US-PGPUB; USPAT	OR	OFF	2007/03/28 13:46
S65	755	(audio sound music voice) same (a/d "analog to digital") same (lpf "low pass")	US-PGPUB; USPAT	OR	OFF	2007/03/28 13:46
S66	282	(audio sound music voice) with (a/d "analog to digital") with ((lpf "low pass") and "digital")	US-PGPUB; USPAT	OR	OFF	2007/03/28 13:47
S67	227	(audio sound music voice) with (a/d "analog to digital") with ((lpf "low pass") and "digital") and @ad<"20011221"	US-PGPUB; USPAT	OR	OFF	2007/03/28 15:33
S68	34712	"band pass filter" bpf with "direct conversion receiver"	US-PGPUB; USPAT	OR	OFF	2007/03/28 15:33
S69	35	("band pass filter" bpf) with "direct conversion receiver"	US-PGPUB; USPAT	OR	OFF	2007/03/28 15:33
S70	8	S69 and @ad<"20011221"	US-PGPUB; USPAT	OR	OFF	2007/03/28 15:55
S71	1	("20030045235").PN.	US-PGPUB; USPAT	OR	OFF	2007/03/28 16:16
S72	1	("20040223622").PN.	US-PGPUB; USPAT	OR	OFF	2007/03/28 16:20
S73	1	("5946343").PN.	US-PGPUB; USPAT	OR	OFF	2007/03/28 16:27

SONY EXHIBIT 1005 – 1017

S74	364	"64-ary"	US-PGPUB; USPAT	OR	OFF	2007/03/28 16:27
S75	74	"64-ary" near modulat$4	US-PGPUB; USPAT	OR	OFF	2007/03/28 16:27
S76	46	S75 and @ad<"20011120"	US-PGPUB; USPAT	OR	OFF	2007/03/28 16:27
S77	2	(("4970637") or ("5790595")).PN.	US-PGPUB; USPAT	OR	OFF	2007/07/16 09:58
S78	3	(("4970637") or ("5790595") or ("20040223622")).PN.	US-PGPUB; USPAT	OR	OFF	2007/07/16 09:58
S79	3	("2004/0223622").URPN.	USPAT	OR	OFF	2007/07/16 11:25
S80	1	("5771441").PN.	US-PGPUB; USPAT	OR	OFF	2007/07/16 11:25
S81	60	("2236946" | "2828413" | "2840694" | "3080785" | "3085460" | "3087117" | "3296916" | "3579211" | "3743751" | "3781451" | "3825666" | "3863157" | "3901118" | "3906160" | "4004228" | "4229826" | "4335930" | "4344184" | "4369521" | "4430757" | "4453269" | "4464792" | "4471493" | "4612688" | "4647135" | "4721926" | "4794622" | "4845751" | "4899388" | "4988957" | "5025704" | "5214568").PN. OR ("5771441").URPN.	US-PGPUB; USPAT; USOCR	OR	OFF	2007/07/16 11:26
S82	2	S81 and cdma	US-PGPUB; USPAT; USOCR	OR	OFF	2007/07/16 11:26
S83	1	("6678892").PN.	US-PGPUB; USPAT	OR	OFF	2008/05/20 11:41
S84	1	("20020072816").PN.	US-PGPUB; USPAT	OR	OFF	2008/05/20 14:24

6/6/2008 9:29:12 AM
C:\Documents and Settings\aflanders\My Documents\EAST\Workspaces\10648012.wsp

SONY EXHIBIT 1005 – 1018

Index of Claims	Application/Control No.	Applicant(s)/Patent Under Reexamination
	10648012	WOOLFORK, C. EARL
	Examiner	Art Unit
	ANDREW C FLANDERS	2615

✓	Rejected	-	Cancelled	N	Non-Elected	A	Appeal
=	Allowed	÷	Restricted	I	Interference	O	Objected

☐ Claims renumbered in the same order as presented by applicant ☐ CPA ☐ T.D. ☐ R.1.47

CLAIM		DATE								
Final	Original	06/06/2008								
	1	-								
	2	-								
	3	-								
	4	-								
	5	-								
	6	-								
	7	-								
	8	-								
	9	-								
	10	-								
	11	-								
	12	-								
	13	-								
	14	-								
	15	-								
	16	-								
	17	-								
	18	-								
1	19	=								
2	20	=								
3	21	=								
4	22	=								
5	23	=								
6	24	=								
7	25	=								
8	26	=								
	27	-								
	28	-								
9	29	=								
10	30	=								
11	31	=								
12	32	=								
	33	-								
	34	-								
	35	-								
	36	-								

SONY EXHIBIT 1005 – 1019

Index of Claims	Application/Control No.	Applicant(s)/Patent Under Reexamination
	10648012	WOOLFORK, C. EARL
	Examiner	Art Unit
	ANDREW C FLANDERS	2615

✓	Rejected	-	Cancelled	N	Non-Elected	A	Appeal
=	Allowed	÷	Restricted	I	Interference	O	Objected

☐ Claims renumbered in the same order as presented by applicant ☐ CPA ☐ T.D. ☐ R.1.47

CLAIM		DATE								
Final	Original	06/06/2008								
	37	-								
	38	-								
	39	-								
	40	-								
	41	-								
	42	-								
13	43	=								
14	44	=								
15	45	=								
16	46	=								
	47	-								
	48	-								
17	49	=								
18	50	=								
	51	-								
	52	-								
	53	-								
	54	-								
	55	-								
	56	-								
	57	-								
	58	-								
	59	-								
19	60	=								
	61	-								

SONY EXHIBIT 1005 – 1020

Issue Classification	Application/Control No.	Applicant(s)/Patent Under Reexamination
	10648012	WOOLFORK, C. EARL
	Examiner	**Art Unit**
	ANDREW C FLANDERS	2615

ORIGINAL		INTERNATIONAL CLASSIFICATION										
CLASS	SUBCLASS	CLAIMED					NON-CLAIMED					
700	94	G	0	6	F	17 / 00 (2006.01.01)						
CROSS REFERENCE(S)		H	0	4	H	40 / 00 (2008.01.01)						
CLASS	SUBCLASS (ONE SUBCLASS PER BLOCK)											
455	3.06											

/Andrew C Flanders (Assistant Examiner)	6/6/08 (Date)		Total Claims Allowed: 19	
/Suhan Ni/ (Primary Examiner)		6/6/08 (Date)	O.G. Print Claim(s) 19	O.G. Print Figure 1

Search Notes	Application/Control No.	Applicant(s)/Patent Under Reexamination
	10648012	WOOLFORK, C. EARL
	Examiner	Art Unit
	ANDREW C FLANDERS	2615

SEARCHED

Class	Subclass	Date	Examiner
700	94	5/3/06	acf
714	709, 780	5/3/06	acf
705	8, 9	5/3/06	acf
455	3.06, 41, 66.1, 41.3	5/3/06	acf
375	224	5/3/06	acf
381	79	5/3/06	acf
455	564.1, 412, 413	9/25/06	acf
375	413, 295-297, 346, 348, 219	9/25/06	acf
375	341, 140, 147, 295, 146, 130, 340, 316, 148, 262, 265, 341	3/20/07	acf
714	794, 75	3/20/07	acf

SEARCH NOTES

Search Notes	Date	Examiner
See History Attached	6/6/08	acf
Reviewed and repeated search history of previous examiner	6/6/08	acf
Tse Young for search help	9/22/06	acf
Bill Trost for search help	9/25/06	acf
Lewis West for search help	9/25/06	acf
Quochien Vuong for search help	9/22/06	acf
Lewis West, suggested 375/140, 146, 147	3/20/07	acf
Kevin Bard, suggested clas 375	3/21/07	acf
Tse young, suggested 375/147, 262, 265, 340, 341 and 714/ 794, 795	3/27/07	acf
Interference search Classes 455 and 375 with claim keywords	6/6/08	acf

INTERFERENCE SEARCH

Class	Subclass	Date	Examiner
700	94	6/6/08	acf

JUN 25 2008
PATENT & TRADEMARK OFFICE

PART B - FEE(S) TRANSMITTAL

Complete and send this form, together with applicable fee(s), to: Mail Mail Stop ISSUE FEE
Commissioner for Patents
P.O. Box 1450
Alexandria, Virginia 22313-1450
or Fax (571)-273-2885

INSTRUCTIONS: This form should be used for transmitting the ISSUE FEE and PUBLICATION FEE (if required). Blocks 1 through 5 should be completed where appropriate. All further correspondence including the Patent, advance orders and notification of maintenance fees will be mailed to the current correspondence address as indicated unless corrected below or directed otherwise in Block 1, by (a) specifying a new correspondence address; and/or (b) indicating a separate "FEE ADDRESS" for maintenance fee notifications.

CURRENT CORRESPONDENCE ADDRESS (Note: Use Block 1 for any change of address)

58533 7590 06/16/2008

MEGAN LYMAN
1816 SILVER MIST CT.
RALEIGH, NC 27613

06/26/2008 SSANDAR1 00000006 10648012
01 FC:2501 720.00 OP

Note: A certificate of mailing can only be used for domestic mailings of the Fee(s) Transmittal. This certificate cannot be used for any other accompanying papers. Each additional paper, such as an assignment or formal drawing, must have its own certificate of mailing or transmission.

Certificate of Mailing or Transmission
I hereby certify that this Fee(s) Transmittal is being deposited with the United States Postal Service with sufficient postage for first class mail in an envelope addressed to the Mail Stop ISSUE FEE address above, or being facsimile transmitted to the USPTO (571) 273-2885, on the date indicated below.

(Depositor's name)
(Signature)
(Date)

APPLICATION NO.	FILING DATE	FIRST NAMED INVENTOR	ATTORNEY DOCKET NO.	CONFIRMATION NO.
10/648,012	08/26/2003	C. Earl Woolfork	1028.1	3327

TITLE OF INVENTION: WIRELESS DIGITAL AUDIO SYSTEM

APPLN. TYPE	SMALL ENTITY	ISSUE FEE DUE	PUBLICATION FEE DUE	PREV. PAID ISSUE FEE	TOTAL FEE(S) DUE	DATE DUE
nonprovisional	YES	$720	$0	$0	$720	09/16/2008

EXAMINER	ART UNIT	CLASS-SUBCLASS
FLANDERS, ANDREW C	2615	700-094000

1. Change of correspondence address or indication of "Fee Address" (37 CFR 1.363).
☐ Change of correspondence address (or Change of Correspondence Address form PTO/SB/122) attached.
☐ "Fee Address" indication (or "Fee Address" Indication form PTO/SB/47; Rev 03-02 or more recent) attached. Use of a Customer Number is required.

2. Fee printing on the patent front page, list
(1) the names of up to 3 registered patent attorneys or agents OR, alternatively,
(2) the name of a single firm (having as a member a registered attorney or agent) and the names of up to 2 registered patent attorneys or agents. If no name is listed, no name will be printed.
1 Megan E. Lyman
2
3

3. ASSIGNEE NAME AND RESIDENCE DATA TO BE PRINTED ON THE PATENT (print or type)

PLEASE NOTE: Unless an assignee is identified below, no assignee data will appear on the patent. If an assignee is identified below, the document has been filed for recordation as set forth in 37 CFR 3.11. Completion of this form is NOT a substitute for filing an assignment.

(A) NAME OF ASSIGNEE (B) RESIDENCE: (CITY and STATE OR COUNTRY)

Please check the appropriate assignee category or categories (will not be printed on the patent): ☐ Individual ☐ Corporation or other private group entity ☐ Government

4a. The following fee(s) are submitted:
☒ Issue Fee
☐ Publication Fee (No small entity discount permitted)
☐ Advance Order - # of Copies

4b. Payment of Fee(s): (Please first reapply any previously paid issue fee shown above)
☐ A check is enclosed.
☒ Payment by credit card. Form PTO-2038 is attached.
☒ The Director is hereby authorized to charge the required fee(s), any deficiency, or credit any overpayment, to Deposit Account Number 50-4576 (enclose an extra copy of this form).

5. Change in Entity Status (from status indicated above)
☐ a. Applicant claims SMALL ENTITY status. See 37 CFR 1.27. ☐ b. Applicant is no longer claiming SMALL ENTITY status. See 37 CFR 1.27(g)(2).

NOTE: The Issue Fee and Publication Fee (if required) will not be accepted from anyone other than the applicant; a registered attorney or agent; or the assignee or other party in interest as shown by the records of the United States Patent and Trademark Office.

Authorized Signature Megan E. Lyman Date 6.25.2008
Typed or printed name Megan E. Lyman Registration No. 57,054

This collection of information is required by 37 CFR 1.311. The information is required to obtain or retain a benefit by the public which is to file (and by the USPTO to process) an application. Confidentiality is governed by 35 U.S.C. 122 and 37 CFR 1.14. This collection is estimated to take 12 minutes to complete, including gathering, preparing, and submitting the completed application form to the USPTO. Time will vary depending upon the individual case. Any comments on the amount of time you require to complete this form and/or suggestions for reducing this burden, should be sent to the Chief Information Officer, U.S. Patent and Trademark Office, U.S. Department of Commerce, P.O. Box 1450, Alexandria, Virginia 22313-1450. DO NOT SEND FEES OR COMPLETED FORMS TO THIS ADDRESS. SEND TO: Commissioner for Patents, P.O. Box 1450, Alexandria, Virginia 22313-1450.
Under the Paperwork Reduction Act of 1995, no persons are required to respond to a collection of information unless it displays a valid OMB control number.

PAGE 2/3 * RCVD AT 6/25/2008 7:55:39 AM [Eastern Daylight Time] * SVR:USPTO-EFXRF-6/34 * DNIS:2732885 * CSID:9193410271 * DURATION (mm-ss):01-54

LYMAN
PATENT SERVICE
www.lymanpatents.com
Megan E. Lyman, MA, JD

FAX TRANSMITTAL

To: USPTO (571) 273-2885

From: Megan Lyman: (919) 341-0271

RE: Issue Fee Payment for Application No. 10/648,012 3pages

Please find PTOL 85B and Credit Card payment form to pay the issue fee for the above named application.

Thank you and if you have any questions, please do not hesitate to contact me.

Best regards,

Megan E Lyman

to map the user code bit inputs to validation outputs. These rules may be developed as if-then statements [[61]].--

~~Please amend paragraph [0014] as follows:~~

--[[The]] [[f]]Fuzzy logic detection sub-system 61 in [[the]] battery-powered headphone receiver 50 utilizes the if-then fuzzy set to map the received user code bits into two values[[;]]: a low (0 or -1) and a high (1). Thus, as the user code bits are received, the "if" rules map the signal bit energy to the fuzzy set low value to some degree and to the fuzzy set high value to some degree. ~~See Figure 4 schematic block 61.~~ Figure 4 ~~schematic block 61~~ graphically shows that x-value -1 equals the maximum low bit energy representation and x-value 1 equals the maximum high bit energy representation. Due to additive noise, the user code bit energy may have some membership to low and high as represented in [[61]] [[of]] Figure 4. The if-part fuzzy set may determine if each bit in the user code, for every received packet, has a greater membership to a high bit representation or a low bit representation. The more a user code bit energy fits into the high or low representation, the closer its subsethood, i.e., a measure of the membership degree to which a set may be a subset of another set, may be to one.--

~~Please amend paragraph [0015] as follows:~~

--The if-then rule parts that make up the fuzzy logic detection sub-system 61 must be followed by a defuzzifying operation. This operation reduces the aforementioned fuzzy set to a bit energy representation (i.e., -1 or 1) that is received by the transmitted

SONY EXHIBIT 1005 – 1025

packet. [[The]] [[f]]Fuzzy logic detection sub-system 61 may be used in [[the]] battery-powered head[[set]]phone receiver 50 to enhance overall system [[10]] performance.--

BB 7-2-08

~~Please amend~~ added paragraph ~~[0016] as follows:~~ (from tif 8)

--The ~~channel decoder 66 may be a Viterbi decoder. A channel decoder 66 may be in communication with the bandpass filter. A decoder 68 may be in communication with a digital to analog converter or DAC 70 that may convert the digital signal back to an analog audio music signal~~. The next step may process the digital signal to return the signal to analog or base band format for use in powering speaker(s) 75. A digital-to-analog converter 70 (DAC) may be used to transform the digital signal to an analog audio signal. An analog low pass filter 72 may be used to filter the analog audio music signal to pass a signal in the approximate 20 Hz to 20 kHz frequency range and filter other frequencies. The analog audio music signal may then be processed by a power amplifier 74 that may be optimized [[to]] for powering headphone speakers 75[[4]] to ~~optimize~~ provide a high quality, low distortion audio music signal for ~~hearing~~ audible enjoyment by a user wearing [[the]] headphones 55. A person skilled in the art would appreciate that some of the embodiments described hereinabove are merely illustrative of the general principles of the present invention. Other modifications or variations may be employed that are within the scope of the invention. Thus, by way of example, but not of limitation, alternative configurations may be utilized in accordance with the teachings herein. Accordingly, the drawings and description are illustrative and not meant to be a limitation thereof.--

SONY EXHIBIT 1005 – 1026

BB 7-2-08

~~Please amend paragraph [0017] as follows:~~

~~--While the invention has been particularly shown and described with respect to the illustrated and preferred embodiments thereof, it will be understood by those skilled in the art that the foregoing and other changes in form and details may be made therein without departing from the spirit and scope of the invention~~ Moreover, all terms should be interpreted in the broadest possible manner consistent with the context. In particular, the terms "comprises" and "comprising" should be interpreted as referring to elements, components, or steps in a non-exclusive manner, indicating that the referenced elements, components, or steps may be present, or utilized, or combined with other elements, components, or steps that are not expressly referenced. Thus, it is intended that the invention cover all embodiments and variations thereof as long as such embodiments and variations come within the scope of the appended claims and their equivalents.--

~~Please amend paragraph [0018] as follows:~~

--~~[0017] The~~ A wireless digital audio ~~music~~ system includes a portable audio source with a digital audio transmitter operatively coupled thereto and an audio receiver operatively coupled to a headphone set. The audio receiver is configured for digital wireless communication with the audio transmitter. The digital audio receiver utilizes fuzzy logic to optimize digital signal processing. Each of the digital audio transmitter and receiver is configured for code division multiple access (CDMA) communication. ~~may utilize a battery powered transmitter to transmit a coded digital signal from an existing analog headphone jack of a music audio player device or source to a battery powered headphone receiver without the use of wires. A battery powered digital transmitter may~~

BB 7-2-08

SENT ~~Please amend paragraph [0017] as follows:~~

--A wireless digital audio system includes a portable audio source with a digital audio transmitter operatively coupled thereto and an audio receiver operatively coupled to a headphone set. The audio receiver is configured for digital wireless communication with the audio transmitter. The digital audio receiver utilizes fuzzy logic to optimize digital signal processing. Each of the digital audio transmitter and receiver is configured for code division multiple access (CDMA) communication. The wireless digital audio system allows private audio enjoyment without interference from other users ~~or other wireless devices~~ of independent wireless digital transmitters and receivers sharing the same space. ~~And without the inconvenience of wires.~~--

SONY EXHIBIT 1005 – 1028

UNITED STATES PATENT AND TRADEMARK OFFICE

UNITED STATES DEPARTMENT OF COMMERCE
United States Patent and Trademark Office
Address: COMMISSIONER FOR PATENTS
P.O. Box 1450
Alexandria, Virginia 22313-1450
www.uspto.gov

APPLICATION NO.	ISSUE DATE	PATENT NO.	ATTORNEY DOCKET NO.	CONFIRMATION NO.
10/648,012	08/12/2008	7412294	1028.1	3337

68533 7590 07/23/2008

MEGAN LYMAN
1816 SILVER MIST CT.
RALEIGH, NC 27613

ISSUE NOTIFICATION

The projected patent number and issue date are specified above.

Determination of Patent Term Adjustment under 35 U.S.C. 154 (b)
(application filed on or after May 29, 2000)

The Patent Term Adjustment is 199 day(s). Any patent to issue from the above-identified application will include an indication of the adjustment on the front page.

If a Continued Prosecution Application (CPA) was filed in the above-identified application, the filing date that determines Patent Term Adjustment is the filing date of the most recent CPA.

Applicant will be able to obtain more detailed information by accessing the Patent Application Information Retrieval (PAIR) WEB site (http://pair.uspto.gov).

Any questions regarding the Patent Term Extension or Adjustment determination should be directed to the Office of Patent Legal Administration at (571)-272-7702. Questions relating to issue and publication fee payments should be directed to the Customer Service Center of the Office of Patent Publication at (571)-272-4200.

APPLICANT(s) (Please see PAIR WEB site http://pair.uspto.gov for additional applicants):

C. Earl Woolfork, Pasadena, CA;

SONY EXHIBIT 1005 – 1029

PTO/SB/44 (09-07)
Approved for use through 08/31/2013. OMB 0651-0033
U.S. Patent and Trademark Office; U.S. DEPARTMENT OF COMMERCE
Under the Paperwork Reduction Act of 1995, no persons are required to respond to a collection of information unless it displays a valid OMB control number.
(Also Form PTO-1050)

UNITED STATES PATENT AND TRADEMARK OFFICE
CERTIFICATE OF CORRECTION

PATENT NO. : 7,412,294

APPLICATION NO.: 10/648,012

ISSUE DATE : August 12, 2008

INVENTOR(S) : C. Earl Woolfork

It is certified that an error appears or errors appear in the above-identified patent and that said Letters Patent is hereby corrected as shown below:

Column 1, line 3, cancel the text beginning with "This utility patent application" to "entirety by reference." in column 1, lines 7-8, and insert the following text:

This application is a continuation-in-part of U.S. patent application No. 10/027,391, filed on December 21, 2001, now abandoned, the disclosure of which is incorporated herein in its entirety by reference.

MAILING ADDRESS OF SENDER (Please do not use customer number below):

Megan Lyman
1816 Silver Mist Ct.
Raleigh, NC 27613

This collection of information is required by 37 CFR 1.322, 1.323, and 1.324. The information is required to obtain or retain a benefit by the public which is to file (and by the USPTO to process) an application. Confidentiality is governed by 35 U.S.C. 122 and 37 CFR 1.14. This collection is estimated to take 1.0 hour to complete, including gathering, preparing, and submitting the completed application form to the USPTO. Time will vary depending upon the individual case. Any comments on the amount of time you require to complete this form and/or suggestions for reducing this burden, should be sent to the Chief Information Officer, U.S. Patent and Trademark Office, U.S. Department of Commerce, P.O. Box 1450, Alexandria, VA 22313-1450. DO NOT SEND FEES OR COMPLETED FORMS TO THIS ADDRESS. **SEND TO: Attention Certificate of Corrections Branch, Commissioner for Patents, P.O. Box 1450, Alexandria, VA 22313-1450.**

If you need assistance in completing the form, call 1-800-PTO-9199 and select option 2.

Privacy Act Statement

The **Privacy Act of 1974 (P.L. 93-579)** requires that you be given certain information in connection with your submission of the attached form related to a patent application or patent. Accordingly, pursuant to the requirements of the Act, please be advised that: (1) the general authority for the collection of this information is 35 U.S.C. 2(b)(2); (2) furnishing of the information solicited is voluntary; and (3) the principal purpose for which the information is used by the U.S. Patent and Trademark Office is to process and/or examine your submission related to a patent application or patent. If you do not furnish the requested information, the U.S. Patent and Trademark Office may not be able to process and/or examine your submission, which may result in termination of proceedings or abandonment of the application or expiration of the patent.

The information provided by you in this form will be subject to the following routine uses:

1. The information on this form will be treated confidentially to the extent allowed under the Freedom of Information Act (5 U.S.C. 552) and the Privacy Act (5 U.S.C 552a). Records from this system of records may be disclosed to the Department of Justice to determine whether disclosure of these records is required by the Freedom of Information Act.
2. A record from this system of records may be disclosed, as a routine use, in the course of presenting evidence to a court, magistrate, or administrative tribunal, including disclosures to opposing counsel in the course of settlement negotiations.
3. A record in this system of records may be disclosed, as a routine use, to a Member of Congress submitting a request involving an individual, to whom the record pertains, when the individual has requested assistance from the Member with respect to the subject matter of the record.
4. A record in this system of records may be disclosed, as a routine use, to a contractor of the Agency having need for the information in order to perform a contract. Recipients of information shall be required to comply with the requirements of the Privacy Act of 1974, as amended, pursuant to 5 U.S.C. 552a(m).
5. A record related to an International Application filed under the Patent Cooperation Treaty in this system of records may be disclosed, as a routine use, to the International Bureau of the World Intellectual Property Organization, pursuant to the Patent Cooperation Treaty.
6. A record in this system of records may be disclosed, as a routine use, to another federal agency for purposes of National Security review (35 U.S.C. 181) and for review pursuant to the Atomic Energy Act (42 U.S.C. 218(c)).
7. A record from this system of records may be disclosed, as a routine use, to the Administrator, General Services, or his/her designee, during an inspection of records conducted by GSA as part of that agency's responsibility to recommend improvements in records management practices and programs, under authority of 44 U.S.C. 2904 and 2906. Such disclosure shall be made in accordance with the GSA regulations governing inspection of records for this purpose, and any other relevant (*i.e.*, GSA or Commerce) directive. Such disclosure shall not be used to make determinations about individuals.
8. A record from this system of records may be disclosed, as a routine use, to the public after either publication of the application pursuant to 35 U.S.C. 122(b) or issuance of a patent pursuant to 35 U.S.C. 151. Further, a record may be disclosed, subject to the limitations of 37 CFR 1.14, as a routine use, to the public if the record was filed in an application which became abandoned or in which the proceedings were terminated and which application is referenced by either a published application, an application open to public inspection or an issued patent.
9. A record from this system of records may be disclosed, as a routine use, to a Federal, State, or local law enforcement agency, if the USPTO becomes aware of a violation or potential violation of law or regulation.

Electronic Patent Application Fee Transmittal

Application Number:	10648012
Filing Date:	26-Aug-2003
Title of Invention:	WIRELESS DIGITAL AUDIO SYSTEM
First Named Inventor/Applicant Name:	C. Earl Woolfork
Filer:	Megan Elizabeth Lyman
Attorney Docket Number:	1028.1

Filed as Small Entity

Utility under 35 USC 111(a) Filing Fees

Description	Fee Code	Quantity	Amount	Sub-Total in USD($)
Basic Filing:				
Pages:				
Claims:				
Miscellaneous-Filing:				
Petition:				
Patent-Appeals-and-Interference:				
Post-Allowance-and-Post-Issuance:				
Certificate of correction	1811	1	100	100
Extension-of-Time:				

Description	Fee Code	Quantity	Amount	Sub-Total in USD($)
Miscellaneous:				
		Total in USD ($)		**100**

Electronic Acknowledgement Receipt	
EFS ID:	9547952
Application Number:	10648012
International Application Number:	
Confirmation Number:	3337
Title of Invention:	WIRELESS DIGITAL AUDIO SYSTEM
First Named Inventor/Applicant Name:	C. Earl Woolfork
Customer Number:	68533
Filer:	Megan Elizabeth Lyman
Filer Authorized By:	
Attorney Docket Number:	1028.1
Receipt Date:	28-FEB-2011
Filing Date:	26-AUG-2003
Time Stamp:	15:16:07
Application Type:	Utility under 35 USC 111(a)

Payment information:

Submitted with Payment	yes
Payment Type	Deposit Account
Payment was successfully received in RAM	$100
RAM confirmation Number	2231
Deposit Account	504576
Authorized User	
The Director of the USPTO is hereby authorized to charge indicated fees and credit any overpayment as follows: Charge any Additional Fees required under 37 C.F.R. Section 1.20 (Post Issuance fees) Charge any Additional Fees required under 37 C.F.R. Section 1.21 (Miscellaneous fees and charges)	

File Listing:

Document Number	Document Description	File Name	File Size(Bytes)/ Message Digest	Multi Part /.zip	Pages (if appl.)
1	Transmittal Letter	CoverSheetForCertificateofCorrection7412294.pdf	73891 0276bf1ac07ab6a59c35cc43ba4fea075ad11b70	no	1
Warnings:					
Information:					
2	Request for Certificate of Correction	294CertofCorr.pdf	164985 39b70dfb65d05f21bb7953f99e8e34afde9124f8	no	2
Warnings:					
Information:					
3	Fee Worksheet (PTO-875)	fee-info.pdf	29942 67faaf01fa5fa096bc87f0827e0529bc6da76a93	no	2
Warnings:					
Information:					
		Total Files Size (in bytes):	268818		

This Acknowledgement Receipt evidences receipt on the noted date by the USPTO of the indicated documents, characterized by the applicant, and including page counts, where applicable. It serves as evidence of receipt similar to a Post Card, as described in MPEP 503.

New Applications Under 35 U.S.C. 111
If a new application is being filed and the application includes the necessary components for a filing date (see 37 CFR 1.53(b)-(d) and MPEP 506), a Filing Receipt (37 CFR 1.54) will be issued in due course and the date shown on this Acknowledgement Receipt will establish the filing date of the application.

National Stage of an International Application under 35 U.S.C. 371
If a timely submission to enter the national stage of an international application is compliant with the conditions of 35 U.S.C. 371 and other applicable requirements a Form PCT/DO/EO/903 indicating acceptance of the application as a national stage submission under 35 U.S.C. 371 will be issued in addition to the Filing Receipt, in due course.

New International Application Filed with the USPTO as a Receiving Office
If a new international application is being filed and the international application includes the necessary components for an international filing date (see PCT Article 11 and MPEP 1810), a Notification of the International Application Number and of the International Filing Date (Form PCT/RO/105) will be issued in due course, subject to prescriptions concerning national security, and the date shown on this Acknowledgement Receipt will establish the international filing date of the application.

U.S. Patent No.: 7,412,294

U.S. Patent Application No.: 10/648,012

IN THE UNITED STATES PATENT AND TRADEMARK OFFICE

In re Patent of:	:	Art Unit: 2615
C. Earl Woolfork	:	
	:	
	:	
For: WIRELESS DIGITAL AUDIO SYSTEM	:	Customer No.: 68533
	:	

COVER LETTER FOR CERTIFICATE OF CORRECTION FORM

Dear Sir or Madam:

The Applicant respectfully resubmits this form for a Certificate of Correction. The new language detailing the genealogy of the patent has been amended as allowed under 35 U.S.C. §§ 119 (e) and 120. The appropriate fee accompanies this transmission. Any overpayment or underpayment of fees associated with this filing are authorized to be charged to Deposit Acct. No. 50-4576. Any questions or concerns can be directed to Ms. Lyman at (919) 341-4023.

Best Regards,

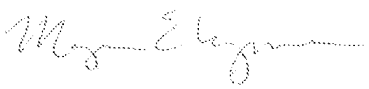

Megan Lyman, Reg. No. 57,054

Date: February 28, 2011

UNITED STATES PATENT AND TRADEMARK OFFICE

CERTIFICATE OF CORRECTION

PATENT NO.	: 7,412,294 B1
APPLICATION NO.	: 10/648012
DATED	: August 12, 2008
INVENTOR(S)	: C. Earl Woolfork

It is certified that error appears in the above-identified patent and that said Letters Patent is hereby corrected as shown below:

Column 1, line 3, cancel the text beginning with "This utility patent application" to "entirety by reference." in column 1, lines 7-8, and insert the following text:

--This application is a continuation-in-part of U.S. patent application No. 10/027,391, filed on December 21, 2001, now abandoned, the disclosure of which is incorporated herein in its entirety by reference.--

Signed and Sealed this
Fifth Day of April, 2011

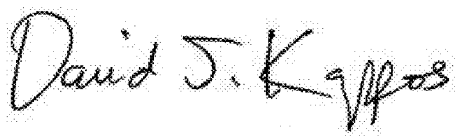

David J. Kappos
Director of the United States Patent and Trademark Office