Ultrahigh-Temperature Materials for Jet Engines

ARTICLE · AUGUST 2003

DOI: 10.1557/mrs2003.189

1 AUTHOR:

Ji-Cheng Zhao
The Ohio State University

MRS BULLETIN

Serving the International Materials Research Community

A Publication of the Materials Research Society

September 2003, Volume 28, No. 9

Ultrahigh-Temperature Materials for Jet Engines

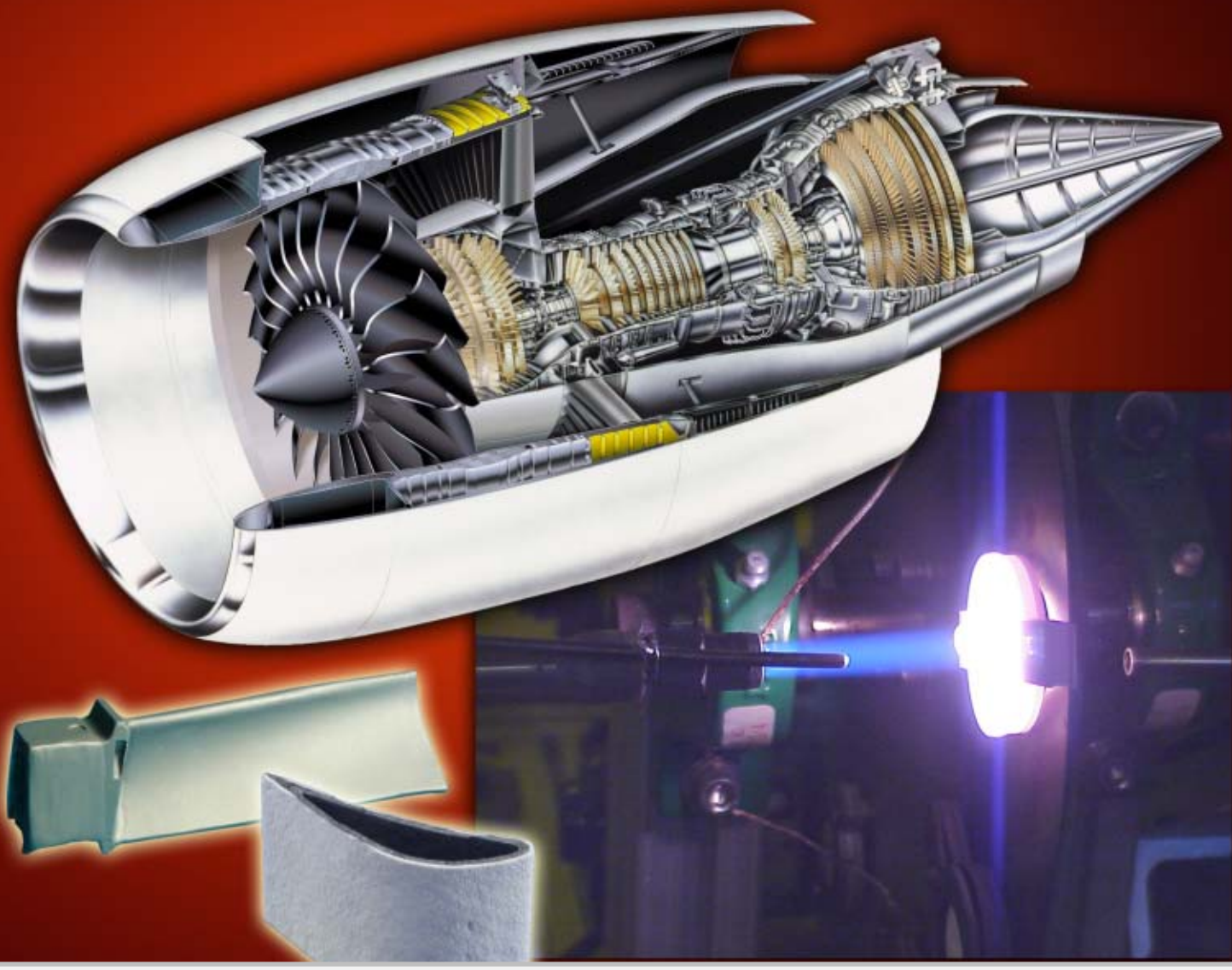

Ultrahigh-Temperature Materials for Jet Engines

J.-C. Zhao and J.H. Westbrook, Guest Editors

Abstract

This introductory article provides the background for the September 2003 issue of *MRS Bulletin* on Ultrahigh-Temperature Materials for Jet Engines. It covers the need for these materials, the history of their development, and current challenges driving continued research and development. The individual articles that follow review achievements in four different material classes (three *in situ* composites—based on molybdenum silicide, niobium silicide, and silicon carbide, respectively—and high-melting-point platinum-group-metal alloys), as well as advances in coating systems developed both for oxidation protection and as thermal barriers. The articles serve as a benchmark to illustrate the progress made to date and the challenges ahead for ultrahigh-temperature jet-engine materials.

Keywords: *coatings, composites, ductility, jet engines, oxidation, oxides, platinum-group-metal alloys (PGM alloys), silicides, strength, structural materials, thermal-barrier coatings, toughness, ultrahigh-temperature materials.*

This year marks the centennial of the Wright brothers' first flight. In the second half of the last century, aircraft powered by jet engines came to dominate both civilian and military flights, and they continue to have tremendous impact on the economy and on our lives (e.g., aircraft turbine engines are the single largest U.S. export product).

The history of the jet engine goes back much farther than one would suppose. Jacques Etienne Montgolfier was the first to propose reaction propulsion for aircraft in 1783. His concept was intended for a balloon rather than an airplane and more for steering than main propulsion. The first patent for a turbine engine appeared in 1791; it was intended for use on a horseless carriage (automobile). Charles de Leuvrié first suggested the idea for a jet-powered monoplane in 1865, but it was not until 1928 that Frank Whittle, a 21-year-old Royal Air Force cadet, advanced the idea of jet propulsion for aircraft in a published thesis. Although his concept was rejected by the authorities of the time, he persevered and by April 12, 1937, had built and successfully tested his first turbo-jet engine. Whittle's engine first powered an airplane (the Gloster E2) on May 15, 1941. Meanwhile, an independent parallel effort was going forward in Germany. Hans von Ohain obtained a patent for a jet engine on November 10, 1935. With backing from Ernst Heinkel, he built the He S3B engine, which successfully powered an airplane, the He 178, on August 27, 1939. Both of these developments came too late to have a significant impact on World War II, although some military jets were flown in the 1940s. The commercial significance of the new mode of power was apparent, and in 1952, the British Overseas Airways Co. (BOAC) inaugurated the first scheduled jet passenger service. In 1992, Ohain and Whittle shared the Draper Prize for "early jet development and contributions to mankind." Readers may be interested in their biographies[1,2] and in another book[3] that clearly explains the fundamentals of a jet engine.

The need in any engine for materials with strength at high temperatures was recognized early, but the first step was to use alloys already known for their modest high-temperature strength and oxidation resistance, such as the Ni-Cr alloys introduced by Marsh in 1906. Only in the late 1930s and early 1940s, with the introduction of the jet engine, was a concerted research effort launched, principally by the Mond Nickel Co. in the United Kingdom, to develop alloys particularly for this purpose. The history of this development was sketched in a recent review.[4] Present-day alloys for this application, Ni-based superalloys, evolved during a period of 70 years or more through small incremental changes contributed by engine manufacturers, materials producers, and materials research and development specialists. These alloys are composed of Ni_3Al (γ') precipitates in a Ni (γ) matrix with admixtures of 10–12 other elements dissolved in one or both of the major phases. The current alloys operate for thousands of hours under loads on the order of 140 MPa at 85% of their melting point. It is now clear that neither the increasing sophistication of our understanding of how such performance is achieved, nor the possibility of further tinkering with composition or processing, nor advances in turbine design (e.g., more complex cooling systems) will yield the improvements demanded by engine designers. We still need substantially improved high-temperature materials that can only come from a completely different materials class.

The jet engine is a very complex yet operationally simple device. Figure 1 shows a GE 90-115B engine, the most powerful jet engine in the world. It consists essentially of a stationary, hour-glass-shaped, cylindrical case on which all of the vanes (nozzles) and the combustion chamber (combustor) are attached, and a rotating mandrel on which a series of disks (rotors, wheels) are mounted. Attached to the peripheries (perimeters/rims) of the disks are the blades (either compressor blades or turbine blades). The vanes duct the air into appropriate directions to effectively propel the blades. Alternating rows of vanes and blades are arranged in both the compressor and turbine sections. As the air is compressed, its temperature rises; it is then mixed with fuel and burned in the combustor to raise the temperature. The high-temperature, high-pressure (high-energy) gas coming out of the combustor is ducted by the first-stage, high-pressure turbine (HPT) vanes to propel the first-stage HPT blades. The efficiency and performance of the jet engine are strongly dependent on the highest temperature in the engine—the inlet temperature of the HPT—and it is the high-temperature capability of these parts that is critical. To achieve higher thrust, higher operating

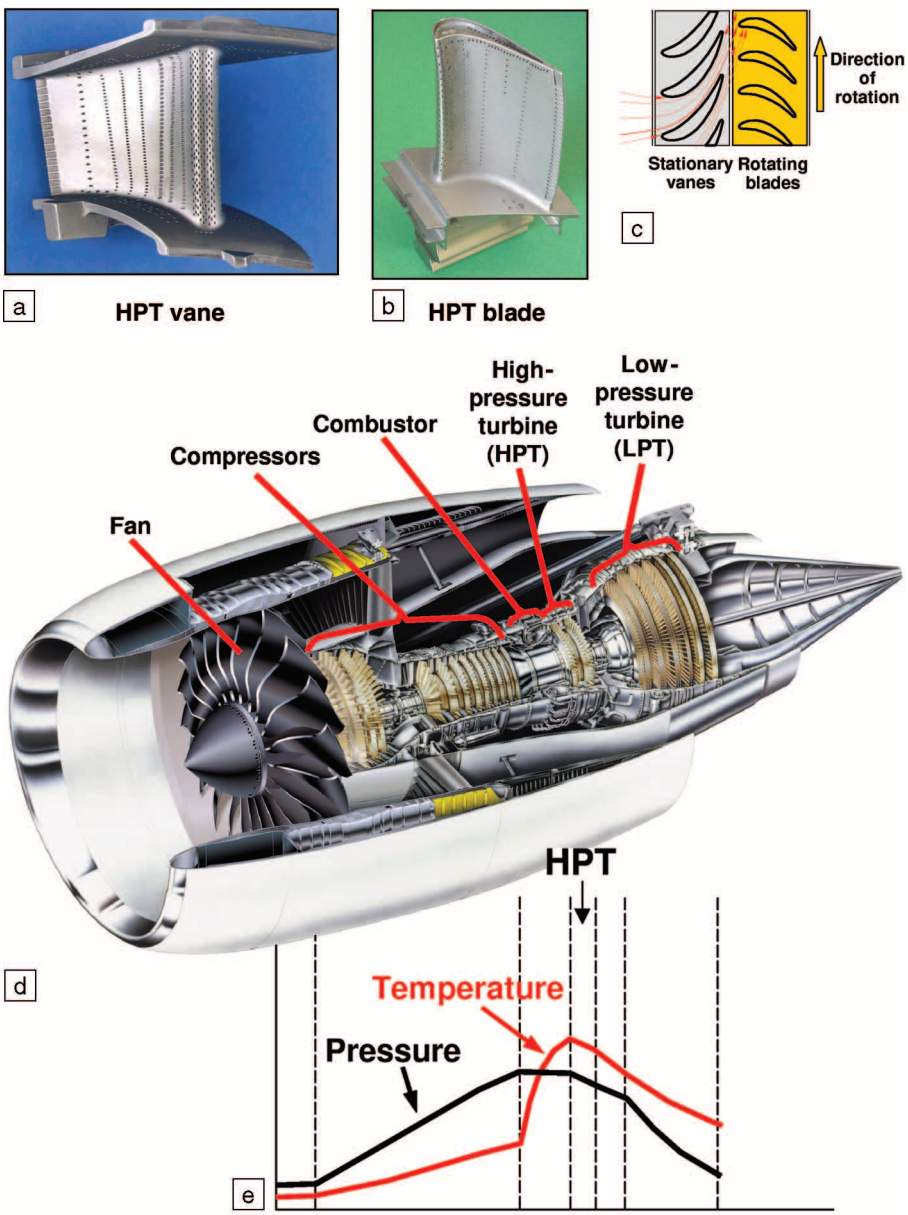

Figure 1. (a), (b) Photographs of a high-pressure turbine (HPT) vane and a HPT blade of a jet engine. (c) Schematic arrangement of the stationary vanes relative to the rotating blades within the engine. (d) Illustration of the GE 90-115B jet engine, showing its various components. (e) Pressure and temperature trends from the front to the back of the engine.

temperatures must be realized. To achieve higher efficiency, engines must be made significantly lighter without loss of thrust. In either case, it is obvious that completely new families of materials must be developed, ones with higher melting points and greater intrinsic strength.

There are only four categories of materials that can be considered: refractory metals, monolithic ceramics, intermetallic compounds, and composites (natural or synthetic).

The first category can be immediately ruled out. None of the refractory metals is sufficiently oxidation-resistant, and all of them, with the exception of chromium, are substantially denser than present-day Ni-based alloys. Chromium, while having the advantage of a lower density than nickel, is only marginally tough at room temperature and is subject to nitrogen embrittlement when exposed to air at high temperatures. Klopp[5] and Ro et al.[6] summarized the progress made with Cr-based alloys; these alloys are currently not considered good prospects for meeting the need. Perhaps significantly, Cr-based alloys were not covered in Sims et al.'s 1987 work, *Superalloys II*.[7]

Many monolithic ceramic materials possess good strength at jet-engine operating temperatures. However, their inherent brittleness poses a significant challenge in withstanding the rigors of assembly and the impact damage caused by foreign objects that may pass through the engines in operation. These materials will have limited applications in turbine engines without further development of improved materials and innovative system architectures.

Thus, we focus on the remaining two classes of potential materials: intermetallic compounds and composites. It is these two groups that are the subjects of the detailed reviews that follow in this issue of *MRS Bulletin*.

There are three families among the intermetallics that have received serious attention for jet-engine applications: γ-TiAl, NiAl, and the platinum-group metal (PGM) compounds. TiAl is considered from an engineering point of view to be the most mature intermetallic for jet-engine applications. Yet its modest melting point (~1500°C) precludes it from use in high-temperature blades and restricts it to the low-pressure turbine and static parts of the engine. After more than 20 years of effort on TiAl,[8–11] it is not yet used in commercial jet engines, despite the fact that a 1993 engine test of a low-pressure fan with 98 TiAl blades was successful. The problems that remain include low room-temperature ductility (1–2%), low fracture toughness, high stress-sensitivity of fatigue life, and high manufacturing cost for finished parts.

NiAl has a number of attractive properties for jet-engine applications, such as a high melting point (~1650°C), good thermal conductivity, low density, and intrinsic oxidation resistance. With suitable alloying (Ta + Cr), good strength properties at temperatures higher than 1000°C can be achieved. Alloy parts based on this intermetallic have been successfully made by a variety of processes (e.g., investment casting, powder metallurgy, hot extrusion, and injection molding). Tests for application as static parts for stationary turbines have been successful. In NiAl alloy development for jet-engine applications, both directionally solidified eutectics and polycrystalline multiphase structures have been explored. Serious consideration for engine applications will require better toughness at room temperature and higher creep strength at high temperatures. Recent summaries of the status of NiAl for engine applications may be found in Mir-

acle and Darolia,[12] Noebe and Walston,[13] and several other papers.[14–17]

The PGM-based intermetallic alloys that have been studied for possible application as high-temperature structural materials fall into two classes: those that are isomorphous with Ni_3Al (e.g., Pt_3Al), and those that are isomorphous with NiAl (e.g., RuAl). In both cases, the advantages of PGM-based intermetallics over Ni-based superalloys are a significantly higher melting point (~1500°C for Pt_3Al and ~2100°C for RuAl) and inherent oxidation resistance, albeit with some increase in density. Recent reviews of these alloys are presented by Wolff et al.[18,19] and Yamabe-Mitarai et al.[20] Most of the attention has been focused on Pt- and Ru-based compounds, but there have been some studies of Ir-based[21] and Rh-based[22] materials. Progress toward the desired properties has been either by alloying to improve strength and reduce density or by oxide-dispersion strengthening (ODS). In this issue, Cornish et al. review current activities and achievements with each approach.

Composite materials are defined[23] as a macroscopic combination of two or more distinct materials having a recognizable interface between them. More particularly, structural composites are those in which a continuous matrix phase bonds and provides toughening characteristics to an array of pieces of a stronger, stiffer reinforcement phase. Structural composites may be formed by artificially bringing together a suitable combination of matrix and reinforcement phase (as in the case of glass-fiber-reinforced polymers) or produced naturally by suitable processing of a carefully selected composition (so-called *in situ* composites). All three composite systems reviewed here fall into this category of *in situ* composites. All are silicon-rich, which lowers density and provides a basis for oxidation resistance, but they differ in the nature of the reinforcing phase or phases. Dimiduk and Perepezko review achievements with *in situ* composites in the Mo-Si-B system, Bewlay et al. address the Nb-Ti-Cr-Si system, and Naslain and Christin cover SiC/SiC ceramic-matrix composites (CMCs). The oxidation behavior and the density-normalized strength of these materials are compared in Figures 2 and 3.[24–37] The reader is cautioned that the data for the different materials were not necessarily obtained under comparable conditions and that all materials shown are under continuous development with progressively improving properties.

Although all of the materials discussed in this issue show promise as ultrahigh-temperature materials for advanced jet engines, there is no clear winner among them so far. Relatively speaking, the development of Mo-Si-B, Nb-silicide-based composites, and PGM-based alloys is still in its infancy, while the development of CMCs has a much longer history. Each class of materials has its own merits and drawbacks, as briefly summarized here and discussed in the respective articles.

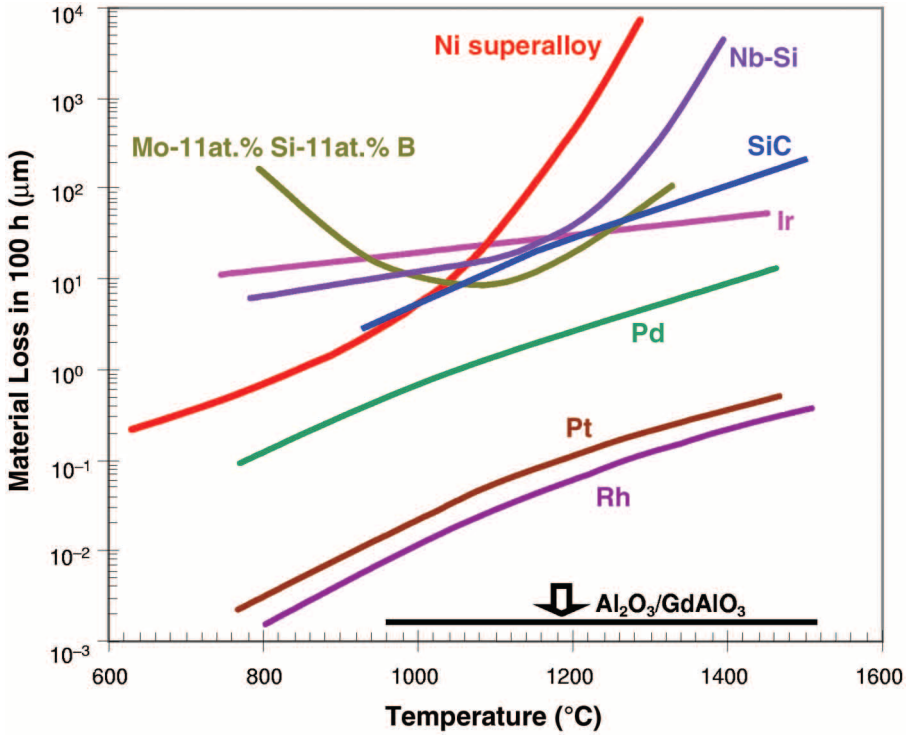

Figure 2. The oxidation/recession rate of various ultrahigh-temperature materials discussed in this issue of MRS Bulletin. *The data were obtained from References 24–29. The best published data were plotted for each class of materials. The recession rate is a good figure of merit for oxidation resistance, as it measures the material loss in thickness by oxidation at certain temperatures and time periods. The material loss is usually by formation and spallation of a thermally grown oxide scale, or by evaporation of the metal and oxide in the case of platinum-group metal alloys and Mo-Si-B. The results on Mo-Si-B are only for one alloy (Mo-11at.%Si-11at.%B) and are only preliminary, sensitive to a variety of processing, composition, and microstructure variables. The SiC data were used as a proxy for ceramic-matrix composites (CMCs), since the CMC data were not available in the literature. The data reported here for SiC were an average of both lean- and rich-burn combustion conditions.[28] The oxidation data were not obtained under identical conditions, therefore this figure is only intended to show the approximate present performance for each class of materials; such data are likely to get better with further materials development.*

■ **SiC/SiC Ceramic-Matrix Composites** are the closest to the long-term engine testing stage; several engine tests with CMCs as combustion chambers have been performed on land-based gas turbines, and similar efforts for jet engines are currently under way. Their strength is relatively low, even on a density-normalized basis. For well-designed systems, the good impact resistance and stability at high operating temperatures make this system an attractive option; significant design effort will be required to take full advantage of the properties as well as to master the challenges poised by mating CMCs with metallic components. Significant progress has been made in environmental-barrier coatings to combat the SiO_2 evaporation problem in high-velocity water-vapor environments. Cost, reliability, estimation of component life, and the manufacture of complex shapes are among the challenges requiring continued attention and development.

■ **Nb Silicide Composites** show good oxidation resistance, good resistance to pesting (intermediate-temperature pulverization), reasonable fracture toughness, good fatigue resistance, good high-temperature strength, good impact resistance, and can be cast reasonably well. Good coatings have also been developed for these composites. However, combining high oxidation resistance with high strength in a

DOCKET ALARM

Explore Litigation Insights

Docket Alarm provides insights to develop a more informed litigation strategy and the peace of mind of knowing you're on top of things.

Real-Time Litigation Alerts

Keep your litigation team up-to-date with **real-time alerts** and advanced team management tools built for the enterprise, all while greatly reducing PACER spend.

Our comprehensive service means we can handle Federal, State, and Administrative courts across the country.

Advanced Docket Research

With over 230 million records, Docket Alarm's cloud-native docket research platform finds what other services can't. Coverage includes Federal, State, plus PTAB, TTAB, ITC and NLRB decisions, all in one place.

Identify arguments that have been successful in the past with full text, pinpoint searching. Link to case law cited within any court document via Fastcase.

Analytics At Your Fingertips

Learn what happened the last time a particular judge, opposing counsel or company faced cases similar to yours.

Advanced out-of-the-box PTAB and TTAB analytics are always at your fingertips.

API

Docket Alarm offers a powerful API (application programming interface) to developers that want to integrate case filings into their apps.

LAW FIRMS

Build custom dashboards for your attorneys and clients with live data direct from the court.

Automate many repetitive legal tasks like conflict checks, document management, and marketing.

FINANCIAL INSTITUTIONS

Litigation and bankruptcy checks for companies and debtors.

E-DISCOVERY AND LEGAL VENDORS

Sync your system to PACER to automate legal marketing.