PCT WORLD INTELLECTUAL PROPERTY ORGANIZATION
International Bureau

INTERNATIONAL APPLICATION PUBLISHED UNDER THE PATENT COOPERATION TREATY (PCT)

(51) International Patent Classification 6 :
H04B 7/26, 17/00, H04Q 7/20, 7/22, 7/24, 7/26, G01S 3/02, H04M 11/00

A1

(11) International Publication Number: **WO 98/10538**

(43) International Publication Date: 12 March 1998 (12.03.98)

(21) International Application Number: PCT/US97/15933

(22) International Filing Date: 8 September 1997 (08.09.97)

(30) Priority Data:

60/025,855	9 September 1996 (09.09.96)	US
60/044,821	25 April 1997 (25.04.97)	US
Not furnished	20 August 1997 (20.08.97)	US

(71)(72) Applicants and Inventors: LEBLANC, Frederick, W. [US/US]; 7547 Braun Street, Arvada, CO 80005 (US). DuPRAY, Dennis, Jay [US/US]; 222 South Marion Parkway, Denver, CO 80209 (US). KARR, Charles, L. [US/US]; 400 Sandbrook Lane, Tuscaloosa, AL 35405 (US).

(74) Agents: DuPRAY, Dennis, J. et al.; Sheridan Ross P.C., Suite 3500, 1700 Lincoln Street, Denver, CO 80203-4501 (US).

(81) Designated States: AL, AM, AT, AU, AZ, BA, BB, BG, BR, BY, CA, CH, CN, CU, CZ, DE, DK, EE, ES, FI, GB, GE, GH, HU, ID, IL, IS, JP, KE, KG, KP, KR, KZ, LC, LK, LR, LS, LT, LU, LV, MD, MG, MK, MN, MW, MX, NO, NZ, PL, PT, RO, RU, SD, SE, SG, SI, SK, SL, TJ, TM, TR, TT, UA, UG, US, UZ, VN, YU, ZW, ARIPO patent (GH, KE, LS, MW, SD, SZ, UG, ZW), Eurasian patent (AM, AZ, BY, KG, KZ, MD, RU, TJ, TM), European patent (AT, BE, CH, DE, DK, ES, FI, FR, GB, GR, IE, IT, LU, MC, NL, PT, SE), OAPI patent (BF, BJ, CF, CG, CI, CM, GA, GN, ML, MR, NE, SN, TD, TG).

Published
With international search report.
With amended claims.

Date of publication of the amended claims:
4 June 1998 (04.06.98)

(54) Title: LOCATION OF A MOBILE STATION USING A PLURALITY OF COMMERCIAL WIRELESS INFRASTRUCTURES

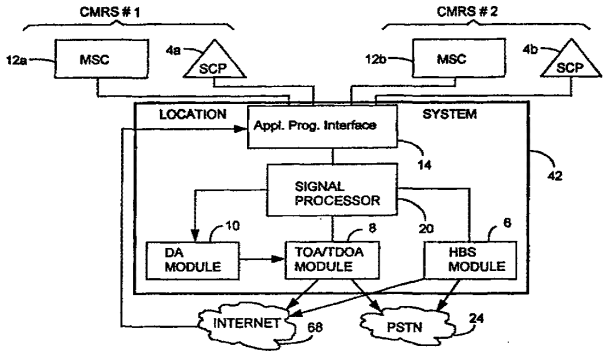

WIRELESS LOCATION USING MULTIPLE CMRSs

(57) Abstract

A location system for commercial wireless telecommunication infrastructures (CMRRs). The system is an end-to-end solution having one or more location systems (42) for outputting requested locations of commercially available hand sets or mobile stations (not shown) based on, e.g, AMPS, NAMPS, CDMA or TDMA communication standards, for processing both local mobile station location requests and more global mobile station location requests via, e.g., Internet communication between a distributed network of location systems. The system uses a plurality of mobile station locating technologies including those based on: two-way TOA and TDOA; home base stations and distributed antenna provisioning. Further, the system can be modularly configured for use in location signaling environments ranging from urban, dense urban, suburban, rural, mountain to low traffic or isolated roadways. Accordingly, the system is useful for 911 emergency calls, tracking, routing, people and animal location including applications for confinement to and from certain areas.

FOR THE PURPOSES OF INFORMATION ONLY

Codes used to identify States party to the PCT on the front pages of pamphlets publishing international applications under the PCT.

AL	Albania	**ES**	Spain	**LS**	Lesotho	**SI**	Slovenia
AM	Armenia	**FI**	Finland	**LT**	Lithuania	**SK**	Slovakia
AT	Austria	**FR**	France	**LU**	Luxembourg	**SN**	Senegal
AU	Australia	**GA**	Gabon	**LV**	Latvia	**SZ**	Swaziland
AZ	Azerbaijan	**GB**	United Kingdom	**MC**	Monaco	**TD**	Chad
BA	Bosnia and Herzegovina	**GE**	Georgia	**MD**	Republic of Moldova	**TG**	Togo
BB	Barbados	**GH**	Ghana	**MG**	Madagascar	**TJ**	Tajikistan
BE	Belgium	**GN**	Guinea	**MK**	The former Yugoslav Republic of Macedonia	**TM**	Turkmenistan
BF	Burkina Faso	**GR**	Greece			**TR**	Turkey
BG	Bulgaria	**HU**	Hungary	**ML**	Mali	**TT**	Trinidad and Tobago
BJ	Benin	**IE**	Ireland	**MN**	Mongolia	**UA**	Ukraine
BR	Brazil	**IL**	Israel	**MR**	Mauritania	**UG**	Uganda
BY	Belarus	**IS**	Iceland	**MW**	Malawi	**US**	United States of America
CA	Canada	**IT**	Italy	**MX**	Mexico	**UZ**	Uzbekistan
CF	Central African Republic	**JP**	Japan	**NE**	Niger	**VN**	Viet Nam
CG	Congo	**KE**	Kenya	**NL**	Netherlands	**YU**	Yugoslavia
CH	Switzerland	**KG**	Kyrgyzstan	**NO**	Norway	**ZW**	Zimbabwe
CI	Côte d'Ivoire	**KP**	Democratic People's Republic of Korea	**NZ**	New Zealand		
CM	Cameroon			**PL**	Poland		
CN	China	**KR**	Republic of Korea	**PT**	Portugal		
CU	Cuba	**KZ**	Kazakstan	**RO**	Romania		
CZ	Czech Republic	**LC**	Saint Lucia	**RU**	Russian Federation		
DE	Germany	**LI**	Liechtenstein	**SD**	Sudan		
DK	Denmark	**LK**	Sri Lanka	**SE**	Sweden		
EE	Estonia	**LR**	Liberia	**SG**	Singapore		

AMENDED CLAIMS

[received by the International Bureau on 3 April 1998 (03.04.98); original claims 1-94 replaced by amended claims 1-79 (24 pages)]

1. A method for locating a wireless mobile station in an area, wherein the area is included in a first area for a first network, and a second area for a second network, wherein:

the first network has a first collection of one or more base station controllers, wherein each of the base station controllers control communications with a corresponding predetermined plurality of geographically dispersed base stations of the first network, wherein each base station controller of said first collection has access to operating characteristics of mobile stations registered with the first network for subscribing to a first wireless service offered by the first network,

the second network has a second collection of one or more base station controllers, wherein each of the base station controllers in the second collection control communications with a corresponding predetermined plurality of geographically dispersed base stations of the second network, said second collection operably disjoint from said first collection, wherein each base station controller of said second collection has a more restricted access to at least one operating characteristic of mobile stations: (i) registered with the first network, and (ii) not registered with the second network for subscribing to a wireless service offered by the second network,

comprising:

receiving first data related to wireless signals communicated between a particular mobile station in the area and the first network, wherein said particular mobile station is registered with the first network;

first activating first location estimator for providing a first estimate of a location of the mobile station, wherein said first location estimator is supplied with first location information for deriving said first estimate, said first location information at least partially derived from the first data, said location information capable of changing with a

AMENDED SHEET (ARTICLE 19)

Bright House Networks - Ex. 1008, Page 1218

change in a location of said particular mobile station;

determining, from at least one of said first location information and said first estimate, a subset of one or more base station transceivers of the second network, wherein said subset is expected to include one or more base station transceivers:

(A1) detected by said particular mobile station, and

(A2) that detects said particular mobile station;

providing the second network with said at least one operating characteristic of said particular mobile station obtained from the first network;

obtaining, in response to said step of providing, additional location information derived at least partially from communications between said particular mobile station and said subset of transceivers related to wireless signals communicated between said particular mobile station and said subset of transceivers;

second activating a second location estimator for providing a second estimate of a location of said particular mobile station, wherein said second location estimator is supplied with said additional location information; and

outputting at least one of the first and second estimates of the location of the mobile station as an estimate of the location of said particular mobile station.

2. A method as claimed in Claim 1, wherein said step of providing includes a prior step of populating a database with mobile station provisioning data, received from a customer care system used by said second network.

3. A method for locating a particular wireless mobile

Bright House Networks - Ex. 1008, Page 1219

station during a wireless communication for an emergency response, wherein an area about said particular mobile station is included in a first area for a first wireless network, and in a second area for a second wireless network, said particular mobile station registered with the first network for subscribing to a wireless service, wherein for each network of said first and second networks, the network includes a collection of one or more mobile switching centers, each of the mobile switching centers controlling communications with a corresponding predetermined plurality of geographically dispersed base stations of the network, and each mobile switching center of said collection:

(a1) having access to predetermined identification information for identifying each mobile station registered with the network, said identifying information being accessible by the mobile switching center independently of a communication between the registered mobile station and the mobile switching center, and

(a2) does not have independent access to said identification information for mobile stations not registered with the network,

comprising:

first receiving, during said emergency response communication, first data including: (b1) said predetermined identification information for identifying said particular mobile station, and (b2) location related data obtained from wireless signals communicated between said particular mobile station and the first network, wherein said location data, is capable of changing when said particular mobile station changes location;

selecting the second network as a different wireless network for obtaining additional location related data obtained from wireless signals communicated between said particular mobile station and the second network;

second receiving said additional location related data;

Bright House Networks - Ex. 1008, Page 1220

determining a location estimate of said particular mobile station using one or more of said location related data and said additional location related data;

outputting a location estimate of said particular mobile station, wherein said location estimate is derived using said one or more estimates.

4. A method as claimed in Claim 3, wherein one or more of said steps of selecting, second receiving, activating and outputting occur during said emergency response communication.

5. A method as claimed in Claim 3, wherein said step of outputting includes a step of transmitting said at least one location estimator to a Public Safety Answering Point.

6. A method as claimed in Claim 3, wherein said particular mobile station is not registered with said second wireless network.

7. method as claimed in Claim 3, further including a step of requesting that said particular mobile station scan for detecting signals transmitted by base station transceivers of the second network.

8. method as claimed in Claim 7, wherein said step of requesting includes providing a transmission to the first network, wherein said transmission instructs said particular mobile station to perform a scan for detecting signals transmitted by base station transceivers of the second network.

9. Method as claimed in Claim 8, wherein said step of receiving includes determining a base station transceiver identification of a base station transceiver from the second network.

Bright House Networks - Ex. 1008, Page 1221

10. A method as claimed in Claim 9, wherein said location related data includes an identification of first set of one or more base station transceivers of the first network such that for each said transceiver at least one of: (a) it detects said particular mobile station, and (b) it is detected by said particular mobile station; and

11. A method as claimed in Claim 10, further including a step of requesting that said transceivers of said second set scan for detecting signals transmitted by said particular mobile station.

12. A method as claimed in Claim 11, wherein said step of requesting includes providing a transmission to the second network, wherein said transmission instructs said second set of transceivers to perform a scan for detecting signals transmitted by said particular base mobile station.

13. A method as claimed in Claim 11, wherein said step of receiving includes determining measurements of wireless signals of a reverse path from said particular mobile station to said transceivers of said second set.

14. A method as claimed in Claim 3, wherein said step of determining includes activating at least one location estimator for providing at least two estimates of a location of said particular mobile station, wherein each said at least one location estimator is supplied with location information derived using at least one of said location related data and said additional location related data.

15. A method for locating a wireless mobile station, comprising:

receiving, by a receiving means, first data related to wireless signals communicated between a particular mobile station and at least a first network of a plurality of

AMENDED SHEET (ARTICLE 19)

Bright House Networks - Ex. 1008, Page 1222

commercial mobile service provider networks, wherein for each said network, there are a plurality of base stations for at least one of transmitting and receiving wireless signals with a corresponding plurality of mobile stations registered with the network, and wherein said particular mobile station is registered with said first network for subscribing to a wireless service;

first activating a first location estimator for providing a first estimate of a location of said particular mobile station, wherein said first location estimator is supplied with first location information from said receiving means for deriving said_first estimate, said first location information including data obtained using the first data, said location information capable of changing with a change in a location of said particular mobile station;

wherein when said location estimator supplied with said first location information, said first estimate is one of: (a) is deemed ambiguous, (b) can not be provided, (c) is not within a desired range of accuracy, and (d) has an extent greater than or equal to a predetermined size, then the steps (A1) and (A2) are performed:

(A1) instructing said particular mobile station to communicate with a second network of the plurality of networks for supplying second data to said receiving means, wherein said particular mobile station is not registered with said second network for subscribing to a wireless service, and wherein said second data is [related to] derived using wireless signals communicated between the mobile station and the second network;

Bright House Networks - Ex. 1008, Page 1223

(A2) second activating a second location estimator for providing a second estimate of a location of said particular mobile station wherein said second location estimator is supplied with additional location information from said receiving means, said additional location information including data obtained using the second data;

outputting at least one of the first and second estimates of the location of the mobile station as an estimate of the location of the mobile station.

16. A method for locating a wireless mobile station as claimed in Claim 15, wherein said additional location information and said first location information are utilized together by said location estimator.

17. A method of locating a wireless mobile station as claimed in Claim 15, wherein said communication stations include wireless base stations for one of CDMA, TDMA, and GSM.

18. A method of locating a wireless mobile station as claimed in Claim 17, wherein said communication stations include home base stations.

19. A method of locating a wireless mobile station as claimed in Claim 15, wherein the mobile station includes one of: a CDMA transmitter, a TDMA transmitter, and a GSM transmitter, and a AMPS transmitter.

20. A method for locating a wireless mobile station as claimed in Claim 15, wherein one or more of said activating steps includes:

(a) said location estimator for determining whether the mobile station is detected by a communication station which communicates with the mobile station as a cordless telephone;

Bright House Networks - Ex. 1008, Page 1224

(b) said location estimator for estimating a location of the mobile station using location information related to data from a distributed antenna system;

(c) said location estimator for estimating a location of the mobile station by one of: triangulation and trilateration.

21. A method for locating a wireless mobile station as claimed in Claim 15, wherein said predetermined extent is less than one thousand feet.

22. A method for locating a wireless mobile station, comprising:

first receiving first signal characteristic measurements of wireless signals communicated between a mobile station and a first network of base stations, wherein said base stations in the first network are cooperatively linked by a first wireless service provider for providing wireless communication;

[instructing] providing to a second network of cooperatively linked base stations for providing wireless services to registered mobile stations [that are cooperatively linked by a second wireless service provider for providing wireless communication so that the] mobile station location data obtained using said first signal characteristic measurements, wherein said second network [searches for] uses said mobile station location data for detecting wireless signals from the mobile station, and wherein said [first and second wireless service providers are different] mobile station is a subscriber of said first wireless service provider's network and mobile station is not a subscriber of said second wireless service provider's network;

second receiving second signal characteristic measurements of wireless signals communicated between the mobile station and said second network of base stations;

estimating a location of the mobile station using said first and second signal characteristic measurements.

AMENDED SHEET (ARTICLE 19)

Bright House Networks - Ex. 1008, Page 1225

23. A method for locating a wireless mobile station, wherein the mobile station communicates via wireless signals with a wireless network infrastructure having a plurality of spaced apart base stations for wireless communication with said first mobile station, wherein said wireless network infrastructure identifies said mobile station by a first identifier for routing substantially all of its communications to said mobile station, comprising:

providing an in-premise transceiver at a predetermined premise address for communicating with said mobile station, wherein said in-premise transceiver routes substantially all communication with said mobile station through a communications network that identifies said mobile station by a second identifier different from said first identifier, wherein the communications network uses said second identifier for routing substantially all of its communications to said mobile station;

storing information relating the premise address and said second identifier;

transmitting, by said in-premise transceiver, a status to the communications network when there is a change as to whether said mobile station and said in-premise transceiver are within a range of one another to wirelessly communicate, wherein said status is indicative of said change;

storing, in a predetermined storage, said status, wherein a first value is stored when said mobile station is within range for communicating with said in-premise transceiver, and has a second value which is stored when said mobile station communicates with said in-premise transceiver;

retrieving, using at least a portion of said information, said status from said predetermined storage;

determining that the premise address is a location of said mobile station when said first value is retrieved as a value for said status.

24. A method for locating a wireless mobile station, as

AMENDED SHEET (ARTICLE 19)

Bright House Networks - Ex. 1008, Page 1226

claimed in Claim 23, wherein said in-premises transceiver is a home base station.

25. A method for locating a wireless mobile station, as claimed in Claim 23, wherein said predetermined storage is accessible via one of: autonomous notification message and a request-response message.

26. A method for locating a wireless mobile station, as claimed in Claim 23, wherein said predetermined storage is a home location register.

27. A method for locating a wireless mobile station, as claimed in Claim 23, wherein said predetermined storage includes one or more of the following data items related to said mobile station: mobile station identification number, in-premise transceiver identification and mobile switch center identification.

28. A method for locating a wireless mobile station, as claimed in claim 23, wherein said step of transmitting further includes associating said change with a predetermined fixed location and said in-premise transceiver identification.

29. A method for locating a wireless mobile station, as claimed in Claim 23, further including a prior step of provisioning a translating database from a customer care system containing the location of the in-premise transceiver.

30. A method as claimed in Claim 23, wherein said communications network is physically connected by a wire to said in-premise transceiver for communicating with said mobile station.

31. A method as claimed in Claim 23, wherein said communications network includes a public switched telephone

Bright House Networks - Ex. 1008, Page 1227

network.

32. A method as claimed in Claim 23, wherein said step of providing includes providing a correspondence in-premise transceiver and said mobile station that is used by said communications network for routing substantially all communications to said mobile station via said in-premise transceiver.

33. A method as claimed in Claim 23, wherein said steps of storing and retrieving include a step of notifying a service control point component of said communications network.

34. A method as claimed in Claim 23, wherein said step of retrieving includes accessing a home location register for said mobile station.

35. A method as claimed in Claim 23, wherein said step of retrieving is performed for determining when to route calls to said mobile station by said first identifier and when to route calls to said mobile station by said second identifier.

36. A method as claimed in Claim 23, wherein said step of retrieving is performed for redirecting a communication to said mobile station, wherein said redirecting is one of: (a) from said in-premise transceiver to said wireless network infrastructure, and (b) from said wireless network infrastructure to said in-premise transceiver.

37. A method as claimed in Claim 36, wherein said redirecting from said in-premise transceiver to said wireless network infrastructure is performed when said second value is retrieved in said step of retrieving.

38. A method as claimed in Claim 36, wherein said redirecting from said wireless network infrastructure to said

AMENDED SHEET (ARTICLE 19)

Bright House Networks - Ex. 1008, Page 1228

in-premise transceiver is performed when said first value is retrieved in said step of retrieving.

39. A method for locating a wireless mobile station, comprising:

receiving data from wireless signals communicated between a mobile station and a wireless network including a plurality of distributed antennas;

detecting, using said data, that the mobile station is in wireless communication with [a] said distributed antenna system having a plurality of antennas connected in series and distributed along a signal conducting line so that there is a predetermined and purposefully introduced signal time delay between said antennas and at predetermined locations;

determining a plurality of signal time delay measurements for signals transmitted between the mobile station and a collection of some of said antennas, wherein said signals are also communicated through said line;

estimating a location of the mobile station using said plurality of signal time delay measurements.

40. A method for locating a wireless mobile station as claimed in Claim 39, wherein said step of estimating includes correlating each measurement of said plurality of signal time delay measurements with a unique corresponding one of said antennas.

41. A method for locating a wireless mobile station as claimed in Claim 39, wherein said step of estimating includes performing a triangulation using values related to one of: a signal time of arrival, and a signal time difference of arrival for time difference of arrival corresponding to each antenna in said collection.

42. A method for locating a wireless mobile station, as claimed in Claim 39 wherein said step of estimating includes a

AMENDED SHEET (ARTICLE 19)

Bright House Networks - Ex. 1008, Page 1229

step of computing a most likely location of said mobile station using a fuzzy logic computation.

43. A method for locating a wireless mobile station as claimed in Claim 39, wherein said step of activating includes activating one of:

(a) a location estimator for determining whether the mobile station is detected by a base station of the network, wherein said base station communicates with the mobile station as a cordless telephone;

(b) a location estimator for estimating a location of the mobile station using location information obtained from said distributed antenna system;

(c) a location estimator for estimating a location of the mobile station by one of: triangulation and trilateration.

44. A method for locating a wireless mobile station, comprising:

first receiving first signal characteristic measurements of wireless signals communicated between a mobile station and a first network of base stations, wherein said base stations in the first network are cooperatively linked by a first wireless service provider for providing wireless communication;

instructing the mobile station to search for a wireless signal from a second network of base stations that are cooperatively linked by a second wireless service provider for providing wireless communication, wherein said mobile station is a subscriber of said first [and second wireless service providers are different] wireless service provider, and said mobile station is not a subscriber of said second wireless

AMENDED SHEET (ARTICLE 19)

Bright House Networks - Ex. 1008, Page 1230

service provider;

second receiving second signal characteristic measurements of wireless signals communicated between the mobile station and said second network of base stations; estimating a location of the mobile station using said first and second signal characteristic measurements.

45. A method for locating a wireless mobile station as claimed in Claim 44, wherein the mobile station is registered for a wireless communication service with the first wireless service provider, and the mobile station is not registered for the wireless communication service with the second wireless service provider.

46. A method for locating a wireless mobile station as claimed in Claim 44, wherein said step of instructing includes transmitting a command to the mobile station for instructing the mobile station to search for a signal from a base station of said second wireless service provider in a frequency bandwidth different from a frequency bandwidth for communicating with the base stations of said first wireless service provider.

47. An apparatus for locating a first mobile station, wherein the first mobile station communicates via wireless signals with a first wireless network infrastructure having:

a plurality of spaced apart base stations for wireless communication with said first mobile station, wherein at least one of said first mobile station and said first wireless network infrastructure has a capability for obtaining a plurality of multipath measurements for one of: one or more forward transmissions to said first mobile station, and one or more reverse transmissions from said first mobile station to said first wireless network infrastructure, and wherein said multipath measurements are derived from both fixed clutter and variable clutter, comprising: [wherein said mobile

AMENDED SHEET (ARTICLE 19)

Bright House Networks - Ex. 1008, Page 1231

switching center also communicates with said plurality of base stations for receiving measurements of said radio signals, said measurements including:

(i) first measurements of said radio signals received by said first mobile station in said forward radio bandwidth, and (ii) second measurements of said radio signals transmitted by said first mobile station in said reverse radio bandwidth;]

a mobile station location determining system for locating said first mobile station, wherein said location determining system is capable of transforming [receives said first and second] values indicative of said multipath measurements for at least one of said forward transmissions and said reverse transmissions, wherein said transformed values have an enhanced dependence on multipath measurements derived from fixed clutter as compared to multipath measurements derived from variable clutter;

wherein said mobile station location determining system includes at least one wireless location determining model for estimating a location of said first mobile station, said at least one model uses one or more of said transformed values;

a means for transmitting, to said location determining system, said values indicative of said multipath measurements;

a means for outputting, from said location determining system, a resulting location estimate of said first mobile station.

48. An apparatus for locating a mobile station as claimed in Claim 47, further including a means for requesting data related to additional radio signals between said first mobile station and at least a second wireless network infrastructure different from said first wireless network infrastructure.

49. An apparatus for locating a mobile station, comprising:

a wireless network infrastructure for communicating with a plurality of mobile stations, each said mobile station for

AMENDED SHEET (ARTICLE 19)

Bright House Networks - Ex. 1008, Page 1232

transmitting and receiving wireless signals, wherein said wireless signals are received in a forward bandwidth and said wireless signals are transmitted in a different reverse bandwidth, and, said wireless network infrastructure having a plurality of spaced apart base stations for communicating via said wireless signals with said plurality of mobile stations;

a location determining means for communicating with said plurality of mobile stations, via said radio signals with the base stations, wherein said location determining means communicates with said plurality of base stations for receiving CDMA finger measurements related to said radio signals for estimating a location of at least a first of said plurality of mobile stations, said measurements including: (i) first measurements of said wireless signals received by said first mobile station in said forward radio bandwidth, and (ii) second measurements of said wireless signals transmitted by said first mobile station in said reverse radio bandwidth;

wherein said location determining means estimates a location of said first mobile station using both said first measurements and said second measurements.

50. An apparatus for locating a mobile station as claimed in Claim 5, wherein said measurements include at least one of: a ratio of energy per bit versus signal to noise, a word error rate, a frame error rate, a mobile signaling means, a power control value, a pilot index, a finger identification, timeoffset, an identification of said first mobile station for communicating with the wireless network infrastructure, a make of said first mobile station, a revision of said first mobile station, a sector identification of one of the base stations receiving said radio signals transmitted from said first mobile station.

51. An apparatus for locating a mobile station as claimed in Claim 49, wherein said location determining means receives

Bright House Networks - Ex. 1008, Page 1233

said measurements from a distributed antenna system.

52. An apparatus for locating a mobile station as claimed in Claim 49, wherein said location determining means receives active, candidate and remaining set information from said first mobile signaling means.

53. A method for locating a wireless mobile station, as claimed in Claim 22, further including a step of requesting the mobile station to raise it's transmitter power level to a predetermined level, prior to said step of second receiving second signal characteristics measurements.

54. A method for locating a mobile station, comprising:

receiving, by said mobile station, a request control message from one of a plurality of base stations, wherein said message is received by a receiving antenna of said mobile station;

the control message providing information related to said message to at least one of a control processor and a searcher receiver in said mobile station;

determining, using at least one of said control processor and said searcher receiver, a plurality of multipath finger sets for a wireless communication between said mobile station and at least a first of the base stations, wherein for at least some of said multipath finger sets are different;

transmitting signals for said finger sets to one or more of the base stations via a transmitting antenna of said mobile station;

routing data for at least one of said finger sets from said one or more base stations to a mobile station location estimator for estimating a location of said mobile station.

55. A method for locating a mobile station, as claimed in Claim 54, wherein each of said multipath finger sets includes

AMENDED SHEET (ARTICLE 19)

Bright House Networks - Ex. 1008, Page 1234

at least a pilot offset identification value, an energy per bit over effective power spectral noise plus interference value, and a time offset value.

56. A method for locating a mobile station, as claimed in Claim 54, wherein said step of determining includes a step of instructing, by said control processor, said searcher receiver to output a plurality of said radio signal strength related values for a plurality of fingers resulting from said communication from said first base station to said mobile station.

57. A method for locating a mobile station, as claimed in Claim 54, further including a step of establishing a software controllable data connection between said control processor and a mobile station component including at least one of: a user digital baseband component and said modulator, wherein said connection inputs said data to said component.

56. A method for locating a mobile station, as claimed in claim 54 further said data for said fingers to a mobile station location estimation system having a first mobile station location estimating component using time difference of arrival measurements for locating said mobile station via one of trilateration and triangulation.

59. A method for locating a mobile station, as claimed in Claim 56, wherein said step of providing includes selecting one of: said first mobile station estimating component, a second mobile station estimating component using data obtained from a distributed antenna system, and a third mobile station estimating component for using data obtained from activation of a home base station.

60. A method for locating a mobile station, as claimed in Claim 59, further including a step of computing a most likely

Bright House Networks - Ex. 1008, Page 1235

location of said mobile station using a fuzzy logic computation.

61. A method for locating a mobile station, as claimed in Claim 60, wherein said step of computing is performed by said second mobile station estimating component for determining a most likely floor that said mobile station resides in a multi-story building having a distributed antenna system.

62. A method for obtaining data related to wireless signal characteristics, comprising:

providing a user with a mobile station for use when the user traverses a route having one or more predetermined route locations, wherein one or more of the route locations have a corresponding telephone number and a corresponding description stored in the mobile station;

performing the following substeps when the user visits each of the route locations: activating a call to said corresponding telephone number;

transmitting a code identifying the route location when the user is substantially at the route location; storing an association of:

(a) signal characteristic measurements for wireless communication between the mobile station and one or more base stations, and

(b) a unique identifier for the route location obtained using said code transmitted by said call;

Wherein said stored signal characteristic measurements are accessible using said unique identifier.

63. A method as claimed in Claim 62, further including, prior to said step of activating, a step of determining, by the user, that a display on the mobile station uniquely identifies that said corresponding description of the route location is available for calling said corresponding telephone

Bright House Networks - Ex. 1008, Page 1236

number and transmitting said identifying code.

64. A method as claimed in Claim 62, wherein said step of storing includes using a phone number identifying the mobile station in combination with said transmitted identifying code for determining said unique identifier.

65. A method as claimed in Claim 62, wherein said corresponding description includes at least one of: a textual description of its corresponding route location, and an address of its corresponding route location.

66. A method as claimed in Claim 62, further including a step of filtering said signal characteristic measurements so that when said signal characteristic measurements are suspected of being transmitted from a location substantially different from the route location, said step of storing is one of: (a) not performed, and (b) performed so as to indicate that said signal characteristic measurements are suspect.

67. A method as claimed in Claim 66, wherein said step of filtering includes at least one of: (a) determining an amount by which an estimated location of the mobile station using said signal characteristic measurements differs from a location of the mobile station obtained from said unique identifier; (b) determining whether a predetermined amount of time has elapsed between successive performances of said step of activating.

68. A method for locating a wireless mobile station, comprising:

first receiving first signal characteristic measurements of wireless signals communicated between a mobile station and a first network of base stations, wherein said first signal characteristic measurements includes:

AMENDED SHEET (ARTICLE 19)

Bright House Networks - Ex. 1008, Page 1237

(a) one or more multipath finger data sets for a wireless communication between the mobile station and at least a first of the base stations;

(b) data identifying operational characteristics of the mobile station including information related to a signal transmission power for the mobile station and information for determining a maximum transmission power level of the mobile station;

adjusting, for at least one of said data sets, using said data, data set has the corresponding adjusted value wherein said adjusted value is an expected value of a predetermined standardized mobile station transmitter power level having a predetermined maximum transmission power and operating at a predetermined transmission power level;

outputting second signal characteristic information, obtained using said adjusted signal strength, to a mobile station location estimator for determining a location estimate of said first mobile station.

69. A method for locating a mobile station as claimed in Claim 68, further including applying a sequence of one or more signal processing filters to one of: said data sets and said adjusted data sets.

70. A method for locating a wireless mobile station, comprising:

first receiving first signal characteristic measurements of wireless signals communicated between a mobile station and a first network of base stations, wherein said first signal characteristic measurements includes one or more multipath finger_measurement sets for a wireless communication between the mobile station and at least a first of the base stations;

AMENDED SHEET (ARTICLE 19)

Bright House Networks - Ex. 1008, Page 1238

categorizing said sets into categories according to ranges of related values for obtaining a representation of a frequency of occurrence of said one or more pairs in said categories;

applying one or more filters to said categorizing sets for one of: (a) reducing characteristics of said representation that are expected to be insufficiently repeatable for use in identifying a location of the mobile station, and (b) enhancing a signal to noise ratio;

supplying an output obtained from said step of applying to a mobile station location estimator;

estimating a location of the mobile station using said mobile station location estimator.

71. An apparatus for locating a mobile station as claimed in Claim 47, further including a means for providing a location estimate using the Internet.

72. An apparatus for locating a mobile station as claimed in Claim 47, further including a means for providing a location estimate using digital certificate keys and the Internet.

73. apparatus for locating a mobile station as claimed in Claim 72, further including a means for providing a location estimate using push technology on the Internet.

74. An apparatus as claimed in Claim 73, wherein said means for outputting includes an Internet web site for transmitting said resulting estimate location from said location determining system to a predetermined Internet address.

75. An apparatus as claimed in Claim 74, further including

AMENDED SHEET (ARTICLE 19)

Bright House Networks - Ex. 1008, Page 1239

encryption/decryption modules for providing secure Internet communications between said Internet web site and said predetermined Internet address.

76. An apparatus as claimed in Claim 75, wherein said predetermined Internet address corresponds to an Internet receiving client at an emergency assistance service center, wherein an identification of said first mobile station is provided to said emergency assistance service center substantially concurrently with the location of said first mobile station being transmitted to said location determining system.

77. An apparatus as claimed in Claim 76, wherein said receiving client is used at an emergency response center.

78. A method for locating a first mobile station, wherein the first mobile station communicates via wireless signals with a first wireless network infrastructure having a plurality of spaced apart base stations for wireless communication with said first mobile station, wherein at least one of said first mobile station and said first wireless network infrastructure has a capability for obtaining a plurality of multipath measurements for one of: one or more forward transmissions to said first mobile station, and one or more reverse transmissions from said first mobile station to said first wireless network infrastructure, and wherein said multipath measurements are derived from both fixed clutter and variable cluster, comprising:

transmitting, from said first wireless network infrastructure to a location determining system, values indicative of said multipath measurements;

transforming said values indicative of said multipath measurements for at least one of said forward transmissions and said reverse transmissions, wherein said transformed values have an enhanced dependence on multipath measurements

Bright House Networks - Ex. 1008, Page 1240

derived from fixed clutter as compared to multipath measurements derived from variable cluster;

determining at least one wireless location estimate of said first mobile station using one or more of said transformed values;

outputting said location estimate of said first mobile station.

79. A method as claimed in Claim 78, wherein said first mobile station and said first wireless network infrastructure communicate using CDMA.

AMENDED SHEET (ARTICLE 19)

Bright House Networks - Ex. 1008, Page 1241

PCT WORLD INTELLECTUAL PROPERTY ORGANIZATION
International Bureau

INTERNATIONAL APPLICATION PUBLISHED UNDER THE PATENT COOPERATION TREATY (PCT)

(51) International Patent Classification 6 :		(11) International Publication Number:
H04M 3/00, 3/42, H04Q 3/00	**A1**	**WO 98/16051**
		(43) International Publication Date: 16 April 1998 (16.04.98)

(21) International Application Number: PCT/CA97/00733

(22) International Filing Date: 6 October 1997 (06.10.97)

(30) Priority Data:
2,187,240 7 October 1996 (07.10.96) CA

(71) Applicant: MITEL CORPORATION [CA/CA]; 350 Legget Drive, P.O. Box 13089, Kanata, Ontario K2K 1X3 (CA).

(72) Inventor: DEADMAN, Richard; 80 Evelyn Avenue, Ottawa, Ontario K1S 0C7 (CA).

(74) Agent: MITCHELL, Richard, J.; Marks & Clerk, P.O. Box 957, Station B, Ottawa, Ontario K1P 5S7 (CA).

(81) Designated States: IL, MX, European patent (AT, BE, CH, DE, DK, ES, FI, FR, GB, GR, IE, IT, LU, MC, NL, PT, SE).

Published
With international search report.
Before the expiration of the time limit for amending the claims and to be republished in the event of the receipt of amendments.

(54) Title: NETWORK CONTROL OF TELEPHONY SERVICES USING DOWNLOADABLE APPLICATIONS

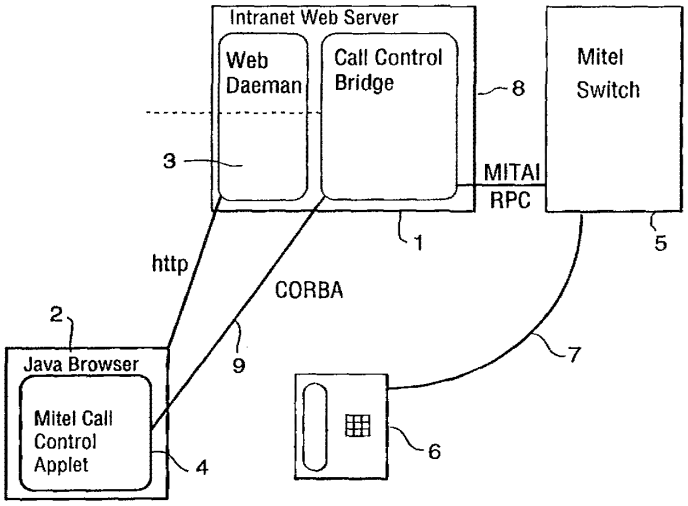

(57) Abstract

A remote call control system comprises a local area network, a network server, a call control server, a plurality of client machines connected to the network server over the local area network, and a telephone switch responsive to instructions from the call control server using a call control protocol to establish connections between telephone sets. Call control applets are downloaded on demand from the server to the client machines for running on the clients. A call control bridge for passes control messages between the applets running on the client machines and the call control server to permit a user operating a client machine to exercise selective control over calls controlled by the call server.

FOR THE PURPOSES OF INFORMATION ONLY

Codes used to identify States party to the PCT on the front pages of pamphlets publishing international applications under the PCT.

AL	Albania	**ES**	Spain	**LS**	Lesotho	**SI**	Slovenia
AM	Armenia	**FI**	Finland	**LT**	Lithuania	**SK**	Slovakia
AT	Austria	**FR**	France	**LU**	Luxembourg	**SN**	Senegal
AU	Australia	**GA**	Gabon	**LV**	Latvia	**SZ**	Swaziland
AZ	Azerbaijan	**GB**	United Kingdom	**MC**	Monaco	**TD**	Chad
BA	Bosnia and Herzegovina	**GE**	Georgia	**MD**	Republic of Moldova	**TG**	Togo
BB	Barbados	**GH**	Ghana	**MG**	Madagascar	**TJ**	Tajikistan
BE	Belgium	**GN**	Guinea	**MK**	The former Yugoslav Republic of Macedonia	**TM**	Turkmenistan
BF	Burkina Faso	**GR**	Greece			**TR**	Turkey
BG	Bulgaria	**HU**	Hungary	**ML**	Mali	**TT**	Trinidad and Tobago
BJ	Benin	**IE**	Ireland	**MN**	Mongolia	**UA**	Ukraine
BR	Brazil	**IL**	Israel	**MR**	Mauritania	**UG**	Uganda
BY	Belarus	**IS**	Iceland	**MW**	Malawi	**US**	United States of America
CA	Canada	**IT**	Italy	**MX**	Mexico	**UZ**	Uzbekistan
CF	Central African Republic	**JP**	Japan	**NE**	Niger	**VN**	Viet Nam
CG	Congo	**KE**	Kenya	**NL**	Netherlands	**YU**	Yugoslavia
CH	Switzerland	**KG**	Kyrgyzstan	**NO**	Norway	**ZW**	Zimbabwe
CI	Côte d'Ivoire	**KP**	Democratic People's Republic of Korea	**NZ**	New Zealand		
CM	Cameroon			**PL**	Poland		
CN	China	**KR**	Republic of Korea	**PT**	Portugal		
CU	Cuba	**KZ**	Kazakstan	**RO**	Romania		
CZ	Czech Republic	**LC**	Saint Lucia	**RU**	Russian Federation		
DE	Germany	**LI**	Liechtenstein	**SD**	Sudan		
DK	Denmark	**LK**	Sri Lanka	**SE**	Sweden		
EE	Estonia	**LR**	Liberia	**SG**	Singapore		

NETWORK CONTROL OF TELEPHONY SERVICES USING DOWNLOADABLE APPLICATIONS

This invention relates generally to the field of telephony, and in particular to a remote call control system for use in a local area network environment.

The Telephony industry has provided a large set of features for managing and controlling telephone calls. Generally users have had to use either the limited interface of their telephone or expensive add-on applications with specific set-up environment requirements. Now that public telephone companies are providing many of these same features to their users through such features as Centrex, the problem is moving past the private branch exchange (PBX) and into the home. Both business and home users are faced with trying to figure out how to do simple tasks, such as call forwarding, using arcane DTMF and switch-hook sequences.

Studies show that of the dozens of features offered on modern PBXs, only a small number are usable by the average user. The transferring of a call is often preceeded by a warning such as "if I lose you...". Other features, which may be useful to the user, are too difficult to access or are totally invisible.

Client Call Management applications which provide the user with an interface on a computer for controlling telephones have emerged as one alternative. They provide easier access to features and customization of telephony requirements. Unfortunately, such applications tend to be costly, difficult to install and maintain, and are limited in platform availability. For these reasons, they have tended to be limited to specific high demand users, such as call centres. The typical low-demand user has not been able to benefit from the enhanced interface available within a computer' s graphical user interface. For many businesses, this has led to the purchasing of expensive telephone sets for their PBX system, which only provide limited extra functionality.

An object of the invention is to alleviate this problem.

According to the present invention there is provided a remote call control system comprising a local area network, a network server, a call control server, a plurality of client machines connected to the network server over the local area network, a telephone

switch responsive to instructions from said call control server using a call control protocol to establish connections between telephone sets, means for downloading on demand call control applets from said server to said client machines for running on said clients, and a call control bridge for passing control messages between said applets running on the client machines and said call control server to permit a user operating a client machine to exercise selective control over calls controlled by the call server.

The invention makes use of platform independent mobile and downloadable software components in distributed computing environments. A downloadable application can be provided which is platform independent and does not need to be installed or maintained on the client machines. Such an application, with a communication path back to a telephone switch, can provide enhanced telephony notification and control to any user with a net-work connected computer.

This invention thus provides a general framework for implementing a mobile telephony client which can use a distributed environment for remotely controlling a telephony server or switch.

The invention will now be described in more detail, by way of example, only with reference to the accompanying drawings, in which the single figure is a block diagram of a remote call control system in accordance with the invention.

Referring to the Figure, a local area network comprises a network application server 1 and a plurality of client machines 2 connected to the application server in a conventional manner, for example, using an Ethernet connection. The application server 1 includes a Web Daemon 3 for providing HTML documents and Java applets. The client machine 2 includes a Java-enabled web browser 4 capable of running Java applets downloaded from the web browser 4.

Java is a hardware-independent interpreted language from Sun Microsystems, which enables mini-programs or "applets" to be downloaded from the server and run on the client machines 2.

A PABX 5, such as a Mitel corporation PABX, is connected to telephone sets 6 over telephone lines 7. The PABX has a MiTAI, Mitel Telephony Application Interface,

and is responsive to instructions in the MiTAI call control protocol to set up calls between telephone sets 6. Alternatively, TSAPI or TAPI interfaces could be used.

The application server 1 includes a call control bridge 8 connecting a call control server 9 to the switch 5. The bridge 8 exchanges messages with the call control server 8 using "COBRA", which stands for Common Object Request broker Architecture. The call control bridge 8 communicates with the switch 5 using the MiTAI interface. In addition, the call control bridge 8 communicates with the client machines 2 over the local area network.

The remote call control system thus consists of the application server 1, the call control server 9, a downloadable platform independent application (applet), and a platform and language independent communication protocol, and a client virtual machine that can download and run the applet.

The application server 1 sends the downloadable application or applet to the client's virtual machine 2 on demand. The applet is executed on the virtual machine 2 and sets up a COBRA connection with the call control server 9 via the call control bridge 8, thereby allowing the user of the client application control over some set of calls controlled by the call Server 9. The applet can register interest in certain events with the call server 9. When these events occur on the server, the applet is notified so that it can take the appropriate action, such-as popping up an "incoming call" window.

User I.D.s and passwords or IP mapping tables can be used for identifying access levels and matching the application to a telephony line. Both individual and group line management services can be provided. Remote debugging of switches and whiteboard conferencing between parties in a call can also be provided.

In the preferred implementation, Hypertext Transport Protocol and associated Hypertext Markup Language browsers are used as the client interface. Sun Microsystem's Java language serves as the platform independent application language. CORBA, the platform independent standard for distributed object message passing, provides messaging between the client applet and the Call Control Server.

The call control bridge 8 exports CORBA objects to client machines and interacts using standard telephony APIs to the PBX 5 controlling the telephone calls.

The Java Applet which registers with the call control bridge and provides control and notification of calls to the client's desktop.

In operation, when the Java-enabled Web browser accesses the Call Control HTML page on the Server, the browser downloads a Java Applet which includes classes for a Java CORBA Object Request Broker. In this way, CORBA is distributed to the clients on an as-needed basis. No installation, customization or management of client-side machines is required, as long as they have a Java enabled browser. When started, the Java applet on the client machines presents a log-in screen. When the user logs in, the applet uses the CORBA classes to connect to the server and then ex-changes object references with the server. A window is created on the client machine that allows the user to use the Call Control applet even as they move on to browsing other Web pages. Asynchronous messages from the server are handled by the applet to update the applets state; in particular, incoming call events cause the applet to pop a window up on the user's screen to alert them to the incoming call.

The invention thus enables a user on a client machine to have selective access to telephone control features on an as needed basis.

The invention can thus provide the control of telephony switches through downloadable applications, the notification of calls through downloadable applications, the control of telephone calls through a World Wide Web HTML browser, such as Netscape, the provision of a COBRA to Telephony API bridge for object oriented telephone calls, client to telephony permission mapping through network addressing, remote debuggin of telephony switches through wide area networks, and data transfer between parties over wide-are networks coordinated with standard telephony calls.

Claims:

1. A remote call control system comprising a local area network, a network server, a call control server, a plurality of client machines connected to the network server over the local area network, a telephone switch responsive to instructions from said call control server using a call control protocol to establish connections between telephone sets, means for downloading on demand call control applets from said server to said client machines for running on said clients, and a call control bridge for passing control messages between said applets running on the client machines and said call control server to permit a user operating a client machine to exercise selective control over calls controlled by the call server.

2. A remote call control system as claimed in claim 1, wherein said network server includes a call control bridge for exchanging messages between said applets and said call control server using object oriented control of calls.

3. A remote call control system as claimed in claim 2, wherein call control server is connected to said switch through a telephony Application Programming Interface.

4. A remote call control system as claimed in claim 3, wherein said network server includes a web daemon, and said client machine includes a web browser for accessing a call control page on said web daemon.

5. A remote call control system as claimed in claim 1, wherein said web browser is Java-enabled for running a Java call control applet on the client machine.

6. A remote call control system as claimed in claim 1, wherein said applets provide notification of calls to users of client machines.

7. A method of controlling telephone calls from a client machine in a local area network environment, comprising downloading on demand call control applets from a network server to client machines, for running said applets on said clients, passing control messages between said applets running on the client machines and a call control server to permit a user operating a client machine to exercise selective control over calls setup by a switch controlled by the call server.

8. A method as claimed in claim 7, wherein said messages between said applets using object oriented control of calls.

9. A method as claimed in claim 8, wherein said applets are accessed using a web browser running on a said client machine.

10. A method as claimed in claim 9, wherein said web browser is Java-enabled.

11. A method as claimed in claim 7, wherein said applets provide pop-up windows to offer notification of calls to users of client machines.

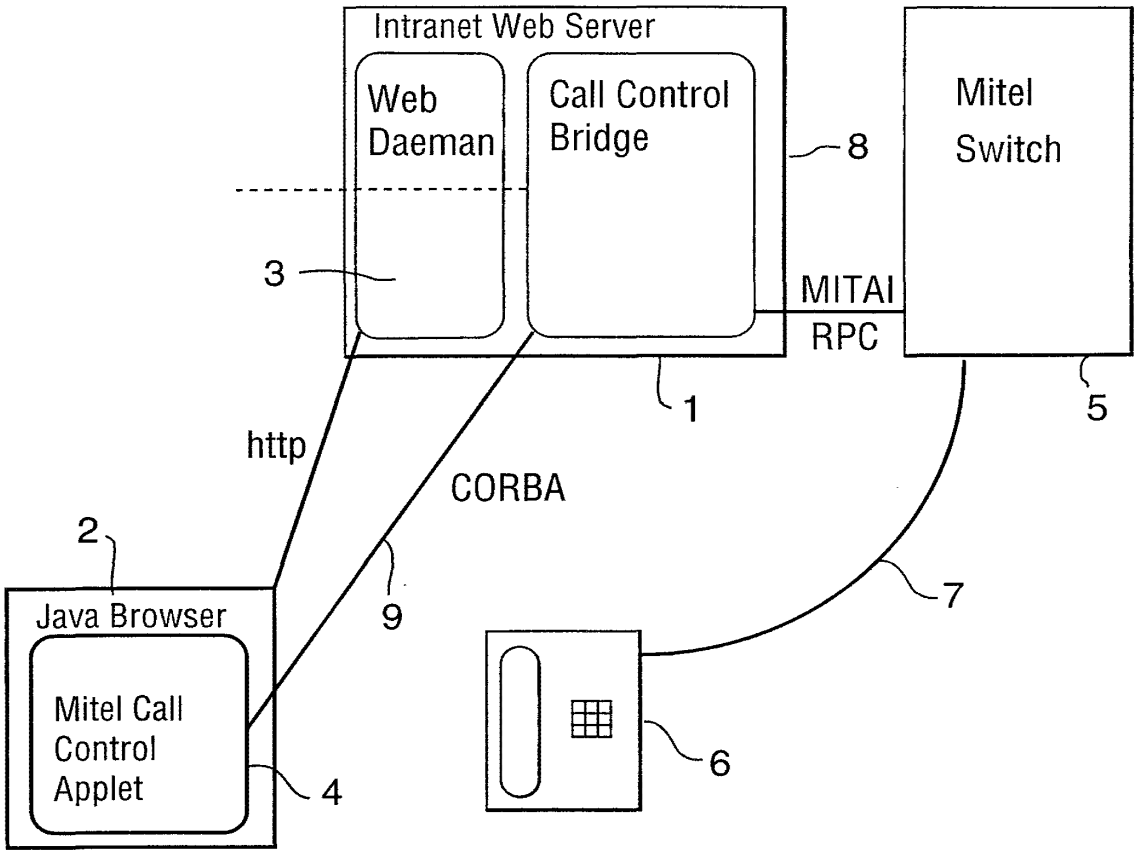
Intranet Web Server
Web Daeman
Call Control Bridge
8
Mitel Switch
3
MITAI
RPC
1
5
http
CORBA
2
Java Browser
9
7
Mitel Call Control Applet
4
6

INTERNATIONAL SEARCH REPORT

Int .tional Application No
PCT/CA 97/00733

A. CLASSIFICATION OF SUBJECT MATTER
IPC 6 H04M3/00 H04M3/42 H04Q3/00

According to International Patent Classification (IPC) or to both national classification and IPC

B. FIELDS SEARCHED

Minimum documentation searched (classification system followed by classification symbols)
IPC 6 H04M

Documentation searched other than minimum documentation to the extent that such documents are included in the fields searched

Electronic data base consulted during the international search (name of data base and, where practical, search terms used)

C. DOCUMENTS CONSIDERED TO BE RELEVANT

Category °	Citation of document, with indication, where appropriate, of the relevant passages	Relevant to claim No.
X	LOW C: "THE INTERNET TELEPHONY RED HERRING" HP LABORATORIES TECHNICAL REPORT, 15 May 1996, pages 1-15, XP002043901 see the whole document ---	1-11
X	LOW C ET AL: "WEBIN - AN ARCHITECTURE FOR FAST DEPLOYMENT OF IN-BASED PERSONAL SERVICES" WORKSHOP RECORD. INTELLIGENT NETWORK. FREEDOM AND FLEXIBILITY: REALISING THE PROMISE OF INTELLIGENT NETWORK SERVICES, 21 April 1996, pages 1-12, XP002043670 see the whole document ---	1-11

-/--

[X] Further documents are listed in the continuation of box C.

[X] Patent family members are listed in annex.

° Special categories of cited documents :

"A" document defining the general state of the art which is not considered to be of particular relevance

"E" earlier document but published on or after the international filing date

"L" document which may throw doubts on priority claim(s) or which is cited to establish the publication date of another citation or other special reason (as specified)

"O" document referring to an oral disclosure, use, exhibition or other means

"P" document published prior to the international filing date but later than the priority date claimed

"T" later document published after the international filing date or priority date and not in conflict with the application but cited to understand the principle or theory underlying the invention

"X" document of particular relevance; the claimed invention cannot be considered novel or cannot be considered to involve an inventive step when the document is taken alone

"Y" document of particular relevance; the claimed invention cannot be considered to involve an inventive step when the document is combined with one or more other such documents, such combination being obvious to a person skilled in the art.

"&" document member of the same patent family

1

Date of the actual completion of the international search	Date of mailing of the international search report
23 February 1998	02/03/1998

Name and mailing address of the ISA	Authorized officer
European Patent Office, P.B. 5818 Patentlaan 2 NL – 2280 HV Rijswijk Tel. (+31–70) 340–2040, Tx. 31 651 epo nl, Fax: (+31–70) 340–3016	Megalou, M

Form PCT/ISA/210 (second sheet) (July 1992)

Bright House Networks - Ex. 1008, Page 1251

INTERNATIONAL SEARCH REPORT

Int ational Application No
PCT/CA 97/00733

C.(Continuation) DOCUMENTS CONSIDERED TO BE RELEVANT

Category °	Citation of document, with indication,where appropriate, of the relevant passages	Relevant to claim No.
P,X	WO 97 22211 A (HEWLETT PACKARD CO ;LOW COLIN (GB); PENKLER DAVID (FR); BOUTHORS N) 19 June 1997 see abstract see page 16, line 13 - page 18, line 16 see page 33, line 18 - page 34, line 17 see figures 13-18	1-11
P,X	WO 97 23988 A (BRITISH TELECOMM ;HARRIS STEPHEN (GB)) 3 July 1997 see page 8, line 26 - page 13, line 8	1,7

1

Form PCT/ISA/210 (continuation of second sheet) (July 1992)

Bright House Networks - Ex. 1008, Page 1252

INTERNATIONAL SEARCH REPORT

Int. tional Application No
PCT/CA 97/00733

Patent document cited in search report	Publication date	Patent family member(s)	Publication date
WO 9722211 A	19-06-97	AU 1104097 A	03-07-97
		AU 1104297 A	03-07-97
		AU 1104697 A	03-07-97
		AU 1181397 A	03-07-97
		WO 9722209 A	19-06-97
		WO 9722210 A	19-06-97
		WO 9722212 A	19-06-97
WO 9723988 A	03-07-97	AU 1184997 A	17-07-97

Form PCT/ISA/210 (patent family annex) (July 1992)

PCT WORLD INTELLECTUAL PROPERTY ORGANIZATION
International Bureau

INTERNATIONAL APPLICATION PUBLISHED UNDER THE PATENT COOPERATION TREATY (PCT)

(51) International Patent Classification 6 :
H04Q 7/38, H04M 3/42

A1

(11) International Publication Number: **WO 98/21911**

(43) International Publication Date: 22 May 1998 (22.05.98)

(21) International Application Number: PCT/SE97/01896

(22) International Filing Date: 11 November 1997 (11.11.97)

(30) Priority Data:
08/747,594 12 November 1996 (12.11.96) US

(71) Applicant: TELEFONAKTIEBOLAGET LM ERICSSON (publ) [SE/SE]; S–126 25 Stockholm (SE).

(72) Inventor: TRÄNK, Jörgen; Hallonstigen 3, S–651 15 Kil (SE).

(74) Agent: TELEFONAKTIEBOLAGET LM ERICSSON; Patent and Trademark Dept., S–126 25 Stockholm (SE).

(81) Designated States: AL, AM, AT, AU, AZ, BA, BB, BG, BR, BY, CA, CH, CN, CU, CZ, DE, DK, EE, ES, FI, GB, GE, GH, HU, ID, IL, IS, JP, KE, KG, KP, KR, KZ, LC, LK, LR, LS, LT, LU, LV, MD, MG, MK, MN, MW, MX, NO, NZ, PL, PT, RO, RU, SD, SE, SG, SI, SK, SL, TJ, TM, TR, TT, UA, UG, UZ, VN, YU, ZW, ARIPO patent (GH, KE, LS, MW, SD, SZ, UG, ZW), Eurasian patent (AM, AZ, BY, KG, KZ, MD, RU, TJ, TM), European patent (AT, BE, CH, DE, DK, ES, FI, FR, GB, GR, IE, IT, LU, MC, NL, PT, SE), OAPI patent (BF, BJ, CF, CG, CI, CM, GA, GN, ML, MR, NE, SN, TD, TG).

Published
With international search report.
Before the expiration of the time limit for amending the claims and to be republished in the event of the receipt of amendments.

(54) Title: DEVICE FOR ROUTING INFORMATION UPDATES

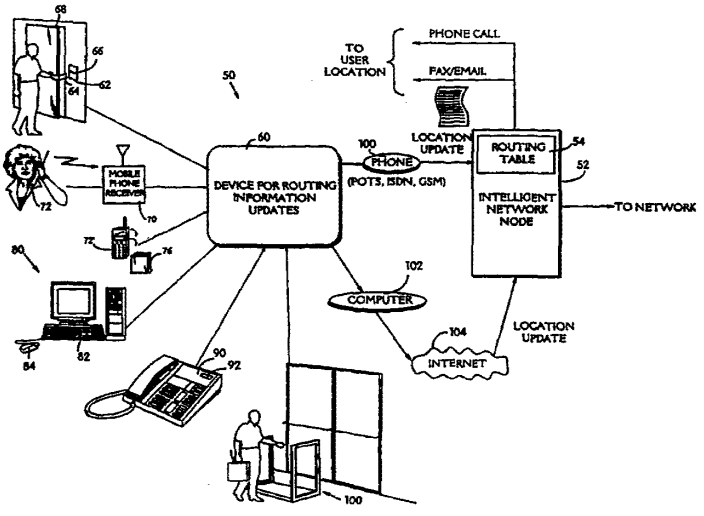

(57) Abstract

A telecommunications network automatically registers and de–registers terminal equipment based on sensed user location. A Universal Personal Telecommunications (UPT) user does not need to remember or take the time to manually register upon arriving at a location or de–register before leaving a location. Instead, automatic sensing devices sense when the UPT user arrives and/or leaves a location. A device for routing information updates automatically generates and sends UPT registration and de–registration messages to an Intelligent Network node in response to sensed user location. The Intelligent Network node updates its routing tables in response to the messages, and automatically routes user calls to the appropriate terminal locations based on the routing tables.

FOR THE PURPOSES OF INFORMATION ONLY

Codes used to identify States party to the PCT on the front pages of pamphlets publishing international applications under the PCT.

AL	Albania	**ES**	Spain	**LS**	Lesotho	**SI**	Slovenia
AM	Armenia	**FI**	Finland	**LT**	Lithuania	**SK**	Slovakia
AT	Austria	**FR**	France	**LU**	Luxembourg	**SN**	Senegal
AU	Australia	**GA**	Gabon	**LV**	Latvia	**SZ**	Swaziland
AZ	Azerbaijan	**GB**	United Kingdom	**MC**	Monaco	**TD**	Chad
BA	Bosnia and Herzegovina	**GE**	Georgia	**MD**	Republic of Moldova	**TG**	Togo
BB	Barbados	**GH**	Ghana	**MG**	Madagascar	**TJ**	Tajikistan
BE	Belgium	**GN**	Guinea	**MK**	The former Yugoslav Republic of Macedonia	**TM**	Turkmenistan
BF	Burkina Faso	**GR**	Greece			**TR**	Turkey
BG	Bulgaria	**HU**	Hungary	**ML**	Mali	**TT**	Trinidad and Tobago
BJ	Benin	**IE**	Ireland	**MN**	Mongolia	**UA**	Ukraine
BR	Brazil	**IL**	Israel	**MR**	Mauritania	**UG**	Uganda
BY	Belarus	**IS**	Iceland	**MW**	Malawi	**US**	United States of America
CA	Canada	**IT**	Italy	**MX**	Mexico	**UZ**	Uzbekistan
CF	Central African Republic	**JP**	Japan	**NE**	Niger	**VN**	Viet Nam
CG	Congo	**KE**	Kenya	**NL**	Netherlands	**YU**	Yugoslavia
CH	Switzerland	**KG**	Kyrgyzstan	**NO**	Norway	**ZW**	Zimbabwe
CI	Côte d'Ivoire	**KP**	Democratic People's Republic of Korea	**NZ**	New Zealand		
CM	Cameroon			**PL**	Poland		
CN	China	**KR**	Republic of Korea	**PT**	Portugal		
CU	Cuba	**KZ**	Kazakstan	**RO**	Romania		
CZ	Czech Republic	**LC**	Saint Lucia	**RU**	Russian Federation		
DE	Germany	**LI**	Liechtenstein	**SD**	Sudan		
DK	Denmark	**LK**	Sri Lanka	**SE**	Sweden		
EE	Estonia	**LR**	Liberia	**SG**	Singapore		

Bright House Networks - Ex. 1008, Page 1255

DEVICE FOR ROUTING INFORMATION UPDATES

Field of the Invention

This invention relates to telecommunications networks such as Intelligent Networks. Still more particularly, this invention relates to Universal Personal Telecommunications, and to systems and methods for automatically updating a telecommunications network concerning the location of a Universal Personal Telecommunications user.

Background and Summary of the Invention

People have more convenient access to telecommunications devices than ever before. Almost everyone has a telephone at home, and most of us also have a telephone at work. Some people also carry portable cellular telephones with them wherever they go. We can see people talking on digital pocket phones in the car, in restaurants, in shopping malls and at the beach.

This multiplicity of communications devices theoretically allows a person to be contacted wherever he or she happens to be. However, the process of successfully reaching a particular person has become complicated. Nowadays, when you ask for someone's telephone number, it is common to get back a list of phone numbers: the work number, the home number, the cellular phone number, the work facsimile number, the home facsimile number, an electronic mail address, etc. All of these telephone numbers are difficult to remember. One must also guess which numbers to try first. It can take a long time to dial the numbers in the list until you finally try the right one. Failed attempts can be expensive if the caller is calling long distance and an answering machine, fax machine or voice mail answers the telephone in the person's absence.

"Universal Personal Telecommunication" ("UPT") addresses this problem. The objective of personal telecommunications is to provide a means of communicating with anyone, anytime, anywhere -- whether at work, at home or on the move. Under the UPT concept, the telecommunications network takes care of routing your call to the correct telephone or other terminal device. You request the

network to connect you to the person you want to reach -- not to a place or a particular terminal. You need not know where this person is for the moment -- the network will find out.

In UPT, the fixed association between terminal access and user identification is removed. The network treats identification of UPT users separately from the addressing of terminals and network access points. Any UPT user can make and receive calls on any terminal. The so-called "Intelligent Network" ("IN") architecture can be used to efficiently implement Universal Personal Telecommunications. See, for example, S derberg, L., "Evolving an Intelligent Architecture for Personal Telecommunication", 4 Ericsson Review 156-170 (1993); Sundborg, J., "Universal Personal Telecommunication (UPT) -- Concept and Standardisation", 4 Ericsson Review 140-155 (1993); and Wallinder, S., "Implementation of UPT--Universal Personal Telecommunications", 1 Ericsson Review (1994).

Because UPT user identification is independent of telephone or other terminal addressing, the telecommunications network must have some way of locating users so it can associate them with nearby telephones or other terminals. UPT requires the network to be constantly updated about UPT users' locations, to enable routing of phone calls and email/fax to the right network address (extension/location). This locating process is sometimes called personal mobility call registration.

In the past, personal mobility registration has been carried out manually, i.e., the user of the service has to access the service from some kind of terminal and manually tell it to associate that (or a different) terminal with the user for the time at least. For example, the UPT user can register a terminal address for incoming calls -- telling the network to route all incoming calls for that user to that terminal address. The UPT user can also register outgoing calls so all outgoing calls from a terminal will be charged to the user. The call registration is made as an update of the UPT user's current terminal address. Such updates are normally done by means of DTMF tone signaling from an ordinary telephone, or via computer terminals connected to the Intelligent Network service management system.

For example, in the standard telephone example, when the UPT user arrives at a new location he can pick up a standard telephone set and dial the UPT service. The user may be required to input his personal universal telephone number and an

associated personal identification number or other password to identify and authenticate himself to the UPT service. The UPT service may prompt the user with a voice menu. The user can make selections by depressing corresponding touch-tone buttons on the standard telephone set. One of the options may be "personal mobility." Upon selecting this option, the user may be prompted concerning what kind of registration he desires (e.g., register incoming calls, register outgoing calls, or registering all calls). Upon depressing an appropriate touch-tone button to select registration type, the service may prompt the user to enter the terminal address of the terminal device he is registering and the time when registration is to expire.

In another prior registration example, the user may use a display device to access the UPT service. The display enables the UPT user to receive graphical information on the screen, and to respond by touching the screen, using a mouse or pressing buttons on a separate keyboard. See Sundborg (cited above), Figure 12.

An appropriate node (or nodes) in the network updates its routing table upon receiving a call registration. From then until the registration is canceled or superseded, the network will route all incoming calls for that UPT user to the registered terminal address -- and may also charge the user for all calls outgoing from that terminal address. The registration may have a certain valid time period associated with it. A new call registration from the same UPT user will cancel the one made previously. The UPT user can explicitly de-register -- breaking the association between the user and a network address.

A significant problem with prior personal mobility features described above is that the user has to remember (and take the time) to update the network routing table each time he or she changes location. If the user forgets or doesn't take the time to manually update the network, the network will be unable to direct messages to the right location and terminal. This can cause serious problems. For example, the network may erroneously direct an important personal call to the user's work phone after the user has gone home for the day.

The prior art includes various techniques for locating subscribers and routing calls to subscriber locations. For example:

U.S. Patent No. 5,506,887 teaches an Advanced Intelligent Network system providing a personal communication service to subscriber wireless handsets or other

portable devices (e.g., laptop computers). When a wireless unit comes within range of a mobile base station, the mobile base station automatically dials and informs the central network controller of the registration.

WO 95/34985 (Alcatel) discloses a subscriber ID card that can be remotely interrogated. Each terminal device which recognizes, through remote interrogation, that the subscriber is nearby reports this fact to the service operator. Calls addressed to the subscriber are directed to the service operator and from there, to whatever terminal device reported last.

WO 95 01070 (Ericsson) discloses sensing when a mobile phone has been placed into a battery charger; and sending a message from the battery charger to the telephone network. This message causes the network to route, to a fixed telephone at the same location, calls directed to the mobile phone. The battery charger similarly detects when the mobile phone has been removed from the charger, and sends a message to the network that causes the network to route, to the mobile phone, calls directed to the fixed telephone.

EP 0520194 (Network Access) discloses a radio tracking system for tracking the location of a telephone user. The user carries a personal communicator that transmits radio signals to the tracking system. The tracking system tracks the user's location, and sends information to the telephone system service node. The service node stores this information in a look-up table along with the directory telephone number of the phone at the subscriber's current location.

EP 0578374 (Northern Telecom) discloses a building access control system using badges. The system determines when subscribers leave and access a building -- and in some cases, where the subscribers are within the building. A telephone switch uses this information to redirect calls to the phone nearest the subscriber.

EP 0 433 465 (NTT) discloses a personal telephone number system. Registration is provided automatically when a portable telephone is connected by a cable to the system. See page 11, lines 11-15.

However, further improvements are possible. For example, none of these references specifically mentions how automatic subscriber locator features including a means that can sense the location of a subscriber without requiring the subscriber to

carry portable telephone equipment, can be integrated with an intelligent network architecture.

The present invention relieves the user of having to manually update the network or the UPT service with the user's location. The present invention solves the manual updating problem by providing methods and devices for automatically generating personal mobility location updates and providing them to the network. By means of a special device connected to either a telephone or to a personal computer/workstation, the telecom service is notified each time the service user is visiting the location where the device is located. The device is capable of detecting when the user is entering/leaving the location where the device is located. Because the UPT service is automatically informed of the user's location, the chance an incoming phone call, facsimile transmission and/or electronic mail message reaching the user is much higher.

When the device detects that the service user is entering the premises, a "location update" is sent to the network node where the routing table is stored. The network node updates the routing table with the terminal address of the nearest terminal (e.g., the phone/fax number and/or email address of the terminal) -- automatically registering the terminal for that user. When the device detects that the service user leaves the premises, it sends another "location update" to the network to de-register the user with respect to that terminal at that location.

Detection of service user presence at a specific location can be accomplished in any of several ways. For example, the network can detect user presence by:

- using information in electronic security locking systems (e.g., where the user must slip a card in a card reader to enter the building);
- detecting "location updates" sent from a mobile phone;
- detecting when a mobile phone is put into its battery charger;
- executing a small application on a personal computer/workstation that lets the user indicate his presence by a single keystroke or mouse "click";
- depressing a special key on a telephone set; and/or

- using an anti-theft system to detect when the user enters/leaves his room or building.

The detection device can be connected to the telecom service in any of several different ways depending upon access method, for example:

- the device send routing updates by means of DTMF signaling (POTS) over a standard telephone link, user-to-user information (ISDN) over an ISDN link, or through use of USSD (GSM) signaling over a GSM link; or

- the device can be connected to a personal computer/workstation, and can send routing updates by means of electronic mail messages over the Internet or other computer network.

Brief Description of the Drawings

These and other features and advantages provided by the invention will be better and more completely understood by referring to the following detailed description of presently preferred embodiments in conjunction with the drawings, of which:

Figure 1 shows a telecommunications system including a device for routing information updates;

Figure 2 is a flowchart of example steps performed by the device for routing information updates; and

Figure 3 is a flowchart of example steps performed by an intelligent network node.

Detailed Description of Presently Preferred Example Embodiments

Figure 1 shows an example overall telecommunications system 50. System 50 may include an Intelligent Network architecture having at least one Intelligent Network node 52. Node 52 may be part of a larger Intelligent Network architecture. Node 52 stores a routing table 54. Routing table 54 may be used as part of the Universal Personal Telephone (UPT) service to route incoming telephone calls, facsimile transmissions and/or electronic mail messages to particular terminals such

as stationary or mobile telephones, fax machines, computers or other terminal devices.

System 50 also includes a device 60 for routing information updates to node 52. In the preferred embodiment, device 60 routes location updates informing node 52 of users' locations. For example, device 60 informs network node 52 when a particular user has arrived at a particular location, and when a particular user has departed from a particular location. Node 52 treats such location updates as UPT call registration or de-registration requests. More specifically, node 52 changes the information in routing table to reflect current user location as indicated by the location updates.

Device 60 includes or is connected to a sensing means for sensing user location. The sensing means can comprise any number of different arrangements or a combination of different arrangements.

In one example, the sensing means can comprise an electronic security locking system 62 or other electronic lock. In this example, the user must slip a card 64 into a card reader 66 to open a door 68 and enter or exit a room or building. When the user slips card 64 into the card reader 66 to enter, the security system 62 senses this and sends a message to the device 60 identifying the card holder. Device 60 sends a corresponding message to node 52 indicating that the identified user is on the premises and can receive telephone calls and other communications there. If the user needs to slip card 64 into the card reader 66 to exit, the security system 62 senses this and sends another message to device 60. Device 60 can send a corresponding message to node 52 indicating that the particular user is no longer on the premises and therefore cannot receive telephone calls or other communications there.

In another example, device 60 can be connected to a conventional mobile telephone receiver 70 of the type that receives mobile telephone location update messages. Such messages are sent periodically by standard mobile telephones 72 whenever they are turned on and operating, to allow cellular communications networks to keep track of which cell the mobile telephones are operating in. Device 60 can respond to such location update messages by automatically generating and sending location update messages to node 52. Node 52 may use such location update messages to register the mobile telephone as the device to which incoming calls for

the phone's owner should be routed, and can route incoming calls to mobile phone 72.

In yet another example, device 60 can be connected to a mobile phone battery charger 76. Battery charging station 76 can alert device 60 whenever mobile phone 72' is placed into the battery charging station. Device 60 can send a location update/registration message to node 52 that de-registers mobile phone 72' as being the user's terminal, and registering the stationary telephone at the charging station 76's location (e.g., the user's home).

In still another example, device 60 can be connected to a conventional personal computer/workstation 80 that runs a small application allowing the user to indicate his presence very simply (e.g., by a single keystroke on keyboard 82 and/or by a "click" of mouse 84). Device 60 can, upon receiving a user presence indicating message from personal computer/workstation 80, send a location update message to node 52 effectively registering the personal computer/workstation (and/or telephones or other telecommunications equipment co-located with the personal computer/workstation) as being the user's destination network address. This registration can expire a certain amount of time after initial registration, or it can stay effective until the user registers from another location.

In yet another example, device 60 can be connected to a conventional telephone set 90 having a special key 92. When the user depresses key 92, device 60 can send a location update message to node 52 registering telephone set 90 as the user's incoming telephone call destination. When the user depresses key 92 again (or depresses a different, "de-registration" key), device 60 can send a further location update message that de-registers telephone set 90 for the user.

In yet another example, device 60 can be connected to a security system 100 of the type shops use to prevent theft. In this example, every user carries a badge, card or other object having a personalized transducer that electronically indicates user identity. Security system 100 detects when the user walks into the room or building, and also detects when the user walks out of the room or building. Security system 100 sends responsive messages to device 60, which in turn sends location update information to node 52 for purposes of registering or deregistering particular terminal

devices at the location with respect to particular users who have walked through the security system 100.

The location update information generated by device 60 may include the following information for example:

user identity information (e.g., user's UPT number or another identification from which the network node 52 can derive the user's UPT number);

registration/deregistration indicator (i.e., whether the user is arriving or leaving the location); and

an optional registration time duration (e.g., in the case of sensing devices that sense only arrival and not departure, the registration can be set for a certain number of hours such as the length of a work day for registering a place of work).

Device 60 can be connected to node 52 through any number of different communications paths. In one example, device 60 is connected through a standard telecommunications link such as DTMF (POTS) signaling, user-to-user information (ISDN) signaling, or USSD (GSM) signaling. In another example, device 60 can be connected to node 52 through a computer 102. Computer 102 can route messages from device 60 to node 52 through electronic mail or other messages over a computer network such as the Internet 104.

Figure 2 shows example steps performed by device 60. In this example, device 60 senses the user's arrival at a certain location (Figure 2, decision block 150). If the user has not yet arrived, device 60 keeps on checking periodically. Device 60 senses when the user arrives and is on site ("yes" exit to decision block 150), and sends a location update message to node 52 that registers the telecommunications devices at the location (Figure 2, block 152). Device 60 may then, if desired, sense user departure from the location (Figure 2, decision block 154). If the user has not yet departed, device 60 waits and keeps on checking. Device 60 senses when the user departs from the location (Figure 2, "yes" exit to decision block 154), and sends a corresponding location update to node 52 that de-registers the telecommunications devices at the location.

Figure 3 shows an example process performed by node 52. In this example, node 52 determines whether it has received a location update from device 60 (Figure 3, decision block 200). If it has ("yes" exit to decision block 200), node 52 retrieves

the network addresses of the telecommunications devices of the corresponding location from a database (block 202), and writes those network addresses into routing table 54 (Figure 3, block 204). If node receives an incoming call for the user ("yes" exit to decision block 206), node 52 routes the call to the user location based on the routing information contained within routing table (Figure 3, block 208).

The present invention thus allows a telecommunications network to automatically register and de-register terminal equipment based on sensed user location. The UPT user does not need to remember to manually register upon arriving at a location or de-register upon leaving a location. Instead, automatic sensing devices sense when the UPT user arrive and/or leave a location, and a device for routing information updates automatically generates and sends UPT registration and/or de-registration messages to an intelligent network node in response to sensed user location.

While the invention has been described in connection with various preferred embodiments, the embodiments have been presented by way of example only, and not limitation. The breadth and scope of the present invention should not be limited by any of the described example embodiments, but to the contrary, should be defined only in accordance with the following claims and their equivalents.

What is claimed is:

1. A telecommunications system having an intelligent network architecture, the system comprising:

an intelligent network including at least one intelligent network node, the intelligent network node storing at least one intelligent network universal personal telephone service routing table and routing calls to users at least in part in response to the routing table contents;

at least one means for sensing user location without requiring the user to carry portable telephone equipment; and

a device for routing information updates coupled to the sensing means and to the intelligent network node, the device for routing information updates generating intelligent network universal personal telephone service location update messages in response to the sensing means and sending the intelligent network universal personal telephone service location update messages to the intelligent network node, the intelligent network node updating its intelligent network universal personal telephone service routing table at least in part in response to the location update messages.

2. A telecommunications system as in claim 1 wherein the sensing means comprises a personal computer including a keyboard and a mouse, the personal computer running a small application that allows the user to indicate his presence by a single keystroke on the keyboard and/or clicking the mouse.

3. A telecommunications system as in claim 1 wherein the location update message includes a user UPT number, a registration/deregistration indicator, and an optional registration time duration.

4. A telecommunications system comprising:

an intelligent network including at least one intelligent network node, the intelligent network node storing at least one routing table and routing calls to users at least in part in response to the routing table contents;

at least one means for sensing user location; and

a device for routing information updates coupled to the sensing means and to the intelligent network node, the device for routing information updates generating location update messages in response to the sensing means and sending the location

update messages to the intelligent network node, the intelligent network node updating its routing table at least in part in response to the location update messages.

5. A telecommunications system as in claim 4 wherein the sensing means comprises an electronic lock.

6. A telecommunications system as in claim 4 wherein the sensing means comprises a mobile phone receiver responsive to location updates generated by a mobile phone.

7. A telecommunications system as in claim 4 wherein the sensing means comprises a mobile phone battery charging station that senses when a mobile phone is coupled thereto.

8. A telecommunications system as in claim 4 wherein the sensing means comprises a computer that senses user manipulation thereof.

9. A telecommunications system as in claim 4 wherein the sensing means comprises a telephone set including a special key, the special key, in use, being depressed by the user to indicate user presence at the location of the telephone set.

10. A telecommunications system as in claim 4 wherein the sensing means comprises a security system that automatically senses user passage through a security zone.

11. A telecommunications system as in claim 4 further including means for coupling the routing device to the intelligent network node.

12. A telecommunications system as in claim 11 wherein the coupling means comprises a standard DTMF telephone signaling line.

13. A telecommunications system as in claim 11 wherein the coupling means comprises an ISDN signaling link.

14. A telecommunications system as in claim 11 wherein the coupling means comprises a GSM signaling link.

15. A telecommunications system as in claim 11 wherein the coupling means comprises means for sending a message over the Internet.

16. A method of registering a terminal to a user comprising:

(a) automatically sensing user presence at a location having at least one terminal;

(b) generating a location update message in response to step (a); and

(c) in response to the location update message generated by step (b), registering the terminal to the user sensed by step (a).

17. A method as in claim 16 wherein sensing step (a) comprises sensing user operation of an electronic lock.

18. A method as in claim 16 wherein sensing step (a) comprises sensing receipt of at least one mobile phone location update message.

19. A method as in claim 16 wherein sensing step (a) comprises sensing coupling of a mobile phone to a battery charger.

20. A method as in claim 16 wherein sensing step (a) comprises sensing user operation of a computer device.

21. A method as in claim 16 wherein sensing step (a) comprises sensing user depression of a special button mounted on a telephone set.

22. A method as in claim 16 wherein sensing step (a) comprises sensing user passage through a security system.

23. A method as in claim 16 further including transmitting the location update message to an intelligent network node over the Internet.

24. A method as in claim 16 further including transmitting the location update message to an intelligent network node over a conventional telecommunications link.

25. In a telecommunications network of the type including a Universal Personal Telecommunications service that enables the network to route incoming communications directed to a particular user to any of a multiplicity of terminal devices, a method of automatically de-registering a terminal device comprising:

(a) automatically sensing user departure from the terminal device location;

(b) generating a location update message in response to step (a); and

(c) in response to the location update message generated by step (b), deregistering the terminal with respect to the user sensed by step (a).

26. A method as in claim 25 wherein the sensing step senses the identity of the user, and the generating step generates a location update message that encodes sensed user identity.

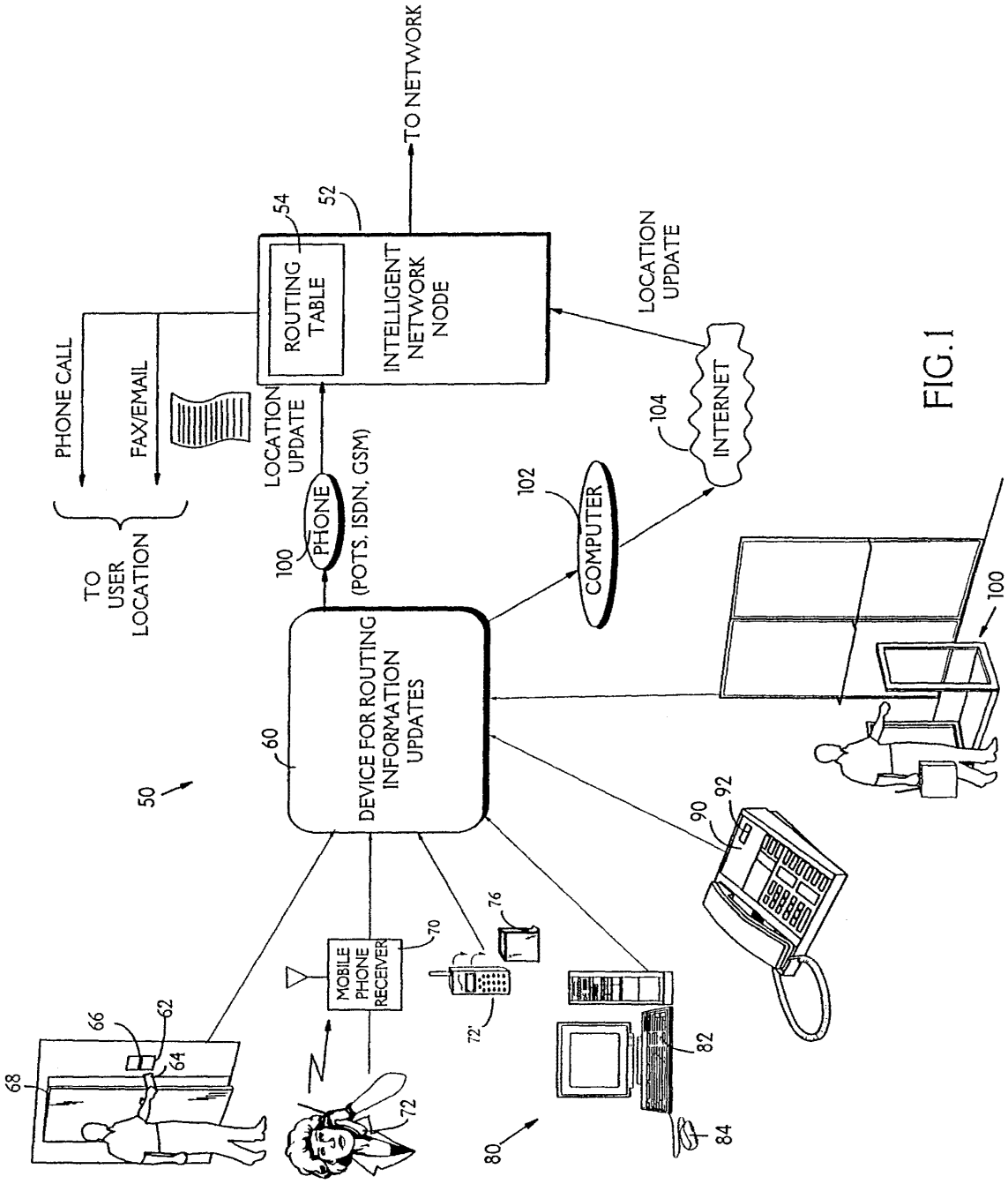

FIG.1

Bright House Networks - Ex. 1008, Page 1270

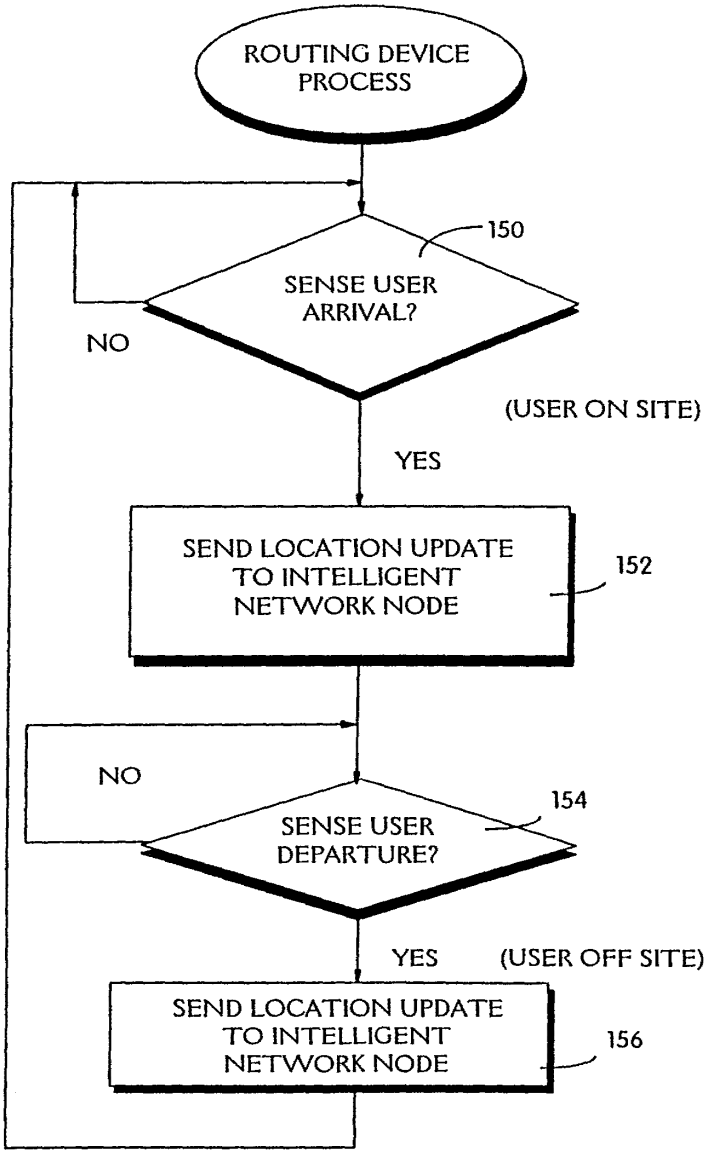
ROUTING DEVICE PROCESS
150
SENSE USER ARRIVAL?
NO
(USER ON SITE)
YES
SEND LOCATION UPDATE TO INTELLIGENT NETWORK NODE
152
NO
154
SENSE USER DEPARTURE?
YES
(USER OFF SITE)
SEND LOCATION UPDATE TO INTELLIGENT NETWORK NODE
156

FIG.2

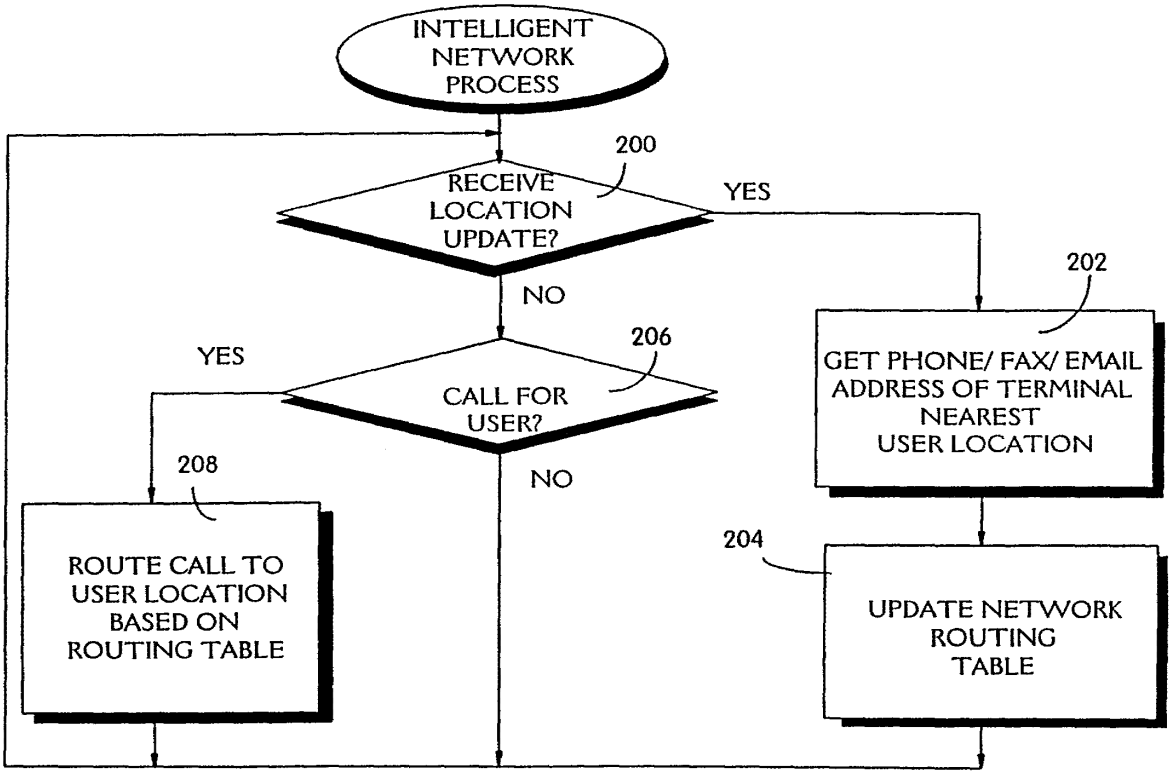
INTELLIGENT NETWORK PROCESS
200
RECEIVE LOCATION UPDATE?
YES
NO
202
GET PHONE/ FAX/ EMAIL ADDRESS OF TERMINAL NEAREST USER LOCATION
206
CALL FOR USER?
YES
NO
208
ROUTE CALL TO USER LOCATION BASED ON ROUTING TABLE
204
UPDATE NETWORK ROUTING TABLE

FIG.3

INTERNATIONAL SEARCH REPORT

Inter ional Application No
PCT/SE 97/01896

A. CLASSIFICATION OF SUBJECT MATTER
IPC 6 H04Q7/38 H04M3/42

According to International Patent Classification(IPC) or to both national classification and IPC

B. FIELDS SEARCHED

Minimum documentation searched (classification system followed by classification symbols)
IPC 6 H04Q H04M

Documentation searched other than minimum documentation to the extent that such documents are included in the fields searched

Electronic data base consulted during the international search (name of data base and, where practical, search terms used)

C. DOCUMENTS CONSIDERED TO BE RELEVANT

Category °	Citation of document, with indication, where appropriate, of the relevant passages	Relevant to claim No.
X	DE 44 20 462 A (SEL ALCATEL AG) 14 December 1995 see the whole document ---	1-6, 8-18, 20-24
X	EP 0 448 076 A (FUJITSU LIMITED) 25 September 1991 see column 10, line 54 - column 11, line 39 see column 6, line 23 - column 9, line 5 ---	1-4, 8-13,16, 20-22, 24,25
X	EP 0 484 067 A (AMERICAN TELEPHONE & TELEGRAPH) 6 May 1992 see the whole document --- -/--	1,4,5,8, 11,16, 17,20, 25,26

[X] Further documents are listed in the continuation of box C.

[X] Patent family members are listed in annex.

° Special categories of cited documents :

"A" document defining the general state of the art which is not considered to be of particular relevance

"E" earlier document but published on or after the international filing date

"L" document which may throw doubts on priority claim(s) or which is cited to establish the publication date of another citation or other special reason (as specified)

"O" document referring to an oral disclosure, use, exhibition or other means

"P" document published prior to the international filing date but later than the priority date claimed

"T" later document published after the international filing date or priority date and not in conflict with the application but cited to understand the principle or theory underlying the invention

"X" document of particular relevance; the claimed invention cannot be considered novel or cannot be considered to involve an inventive step when the document is taken alone

"Y" document of particular relevance; the claimed invention cannot be considered to involve an inventive step when the document is combined with one or more other such documents, such combination being obvious to a person skilled in the art.

"&" document member of the same patent family

1

Date of the actual completion of the international search	Date of mailing of the international search report
16 April 1998	23/04/1998

Name and mailing address of the ISA	Authorized officer
European Patent Office, P.B. 5818 Patentlaan 2 NL - 2280 HV Rijswijk Tel. (+31-70) 340-2040, Tx. 31 651 epo nl, Fax: (+31-70) 340-3016	Janyszek, J-M

Form PCT/ISA/210 (second sheet) (July 1992)

Bright House Networks - Ex. 1008, Page 1273

INTERNATIONAL SEARCH REPORT

Inte. ional Application No
PCT/SE 97/01896

C.(Continuation) DOCUMENTS CONSIDERED TO BE RELEVANT

Category °	Citation of document, with indication,where appropriate, of the relevant passages	Relevant to claim No.
X	EP 0 433 465 A (NIPPON TELEGRAPH & TELEPHONE) 26 June 1991 see page 9, line 11 - page 10, line 6 see page 11, line 1 - line 28; claims 1,6-11; figures	4,6, 11-16, 18,23,24
X	US 5 506 887 A (EMERY MARK J ET AL) 9 April 1996 see column 7, line 61 - column 9, line 19 see column 15, line 63 - column 16, line 11 see column 16, line 49 - column 17, line 39; figures	4,6,9, 11-16, 18,21, 23,24
X	WO 95 01070 A (ERICSSON TELEFON AB L M) 5 January 1995 see page 17, line 26 - page 19, line 33	4,6,7, 11-14, 16,18, 19,23-26
X	EP 0 520 194 A (NETWORK ACCESS CORP) 30 December 1992 see column 5, line 24 - column 12, line 28 see column 13, line 26 - line 45	4,11-16, 23-26
X	EP 0 578 374 A (NORTHERN TELECOM LTD) 12 January 1994 see page 3, line 42 - line 55 see page 4, line 18 - line 28 see page 4, line 40 - line 58 see page 5, line 39 - page 6, line 32 see page 8, line 38 - page 9, line 24; figures	4,5, 10-13, 15-17, 22-24
P,X	US 5 592 533 A (FARRIS ROBERT D ET AL) 7 January 1997 see column 11, line 55 - column 12, line 37 see column 15, line 50 - column 19, line 67	1-26

1

Form PCT/ISA/210 (continuation of second sheet) (July 1992)

Bright House Networks - Ex. 1008, Page 1274

INTERNATIONAL SEARCH REPORT

Information on patent family members

Inter...ional Application No
PCT/SE 97/01896

Patent document cited in search report	Publication date	Patent family member(s)	Publication date
DE 4420462 A	14-12-95	AU 2791695 A	05-01-96
		CA 2169379 A	21-12-95
		WO 9534985 A	21-12-95
		EP 0713626 A	29-05-96
		JP 9502072 T	25-02-97
EP 0448076 A	25-09-91	JP 3270453 A	02-12-91
		CA 2038476 C	07-02-95
		DE 69126806 D	21-08-97
		US 5414759 A	09-05-95
EP 0484067 A	06-05-92	US 5243645 A	07-09-93
		CA 2050691 A,C	02-05-92
		JP 4267664 A	24-09-92
EP 0433465 A	26-06-91	DE 69027412 D	18-07-96
		DE 69027412 T	30-01-97
		WO 9100664 A	10-01-91
		US 5251248 A	05-10-93
US 5506887 A	09-04-96	US 5469496 A	21-11-95
		US 5353331 A	04-10-94
		US 5579379 A	26-11-96
		US 5664005 A	02-09-97
		US 5610972 A	11-03-97
		WO 9318606 A	16-09-93
WO 9501070 A	05-01-95	AU 7089294 A	17-01-95
		CA 2163745 A	05-01-95
		CN 1126017 A	03-07-96
		EP 0705522 A	10-04-96
		FI 956144 A	20-12-95
		JP 8511925 T	10-12-96
		NO 955209 A	21-02-96
		SE 9302161 A	23-12-94
EP 0520194 A	30-12-92	US 5315636 A	24-05-94
		CA 2069727 A	29-12-92
		JP 5191516 A	30-07-93
		US 5416780 A	16-05-95

Bright House Networks - Ex. 1008, Page 1275

INTERNATIONAL SEARCH REPORT

Information on patent family members

Inter onal Application No
PCT/SE 97/01896

Patent document cited in search report	Publication date	Patent family member(s)	Publication date
EP 0578374 A	12-01-94	US 5363425 A	08-11-94
		CA 2091393 A	30-12-93
		JP 6090481 A	29-03-94
US 5592533 A	07-01-97	US 5610969 A	11-03-97

Form PCT/ISA/210 (patent family annex) (July 1992)

Bright House Networks - Ex. 1008, Page 1276

PCT WORLD INTELLECTUAL PROPERTY ORGANIZATION
International Bureau

INTERNATIONAL APPLICATION PUBLISHED UNDER THE PATENT COOPERATION TREATY (PCT)

(51) International Patent Classification 6 : **H04M 7/00, 1/00, 3/50, H04L 29/06**	**A1**	**(11) International Publication Number:** **WO 98/30008** **(43) International Publication Date:** 9 July 1998 (09.07.98)

(21) International Application Number: PCT/US97/23816

(22) International Filing Date: 22 December 1997 (22.12.97)

(30) Priority Data:
08/777,824 31 December 1996 (31.12.96) US

(71) Applicant: MCI COMMUNICATIONS CORPORATION [US/US]; 1133 19th Street, N.W., Washington, DC 20036 (US).

(71)(72) Applicant and Inventor: WILSON, James, E. [US/US]; 3908 Bosque Drive, Plano, TX 75074 (US).

(74) Agents: WARREN, Sanford, E., Jr. et al.; Warren & Perez, Suite 710, 8411 Preston Road, Dallas, TX 75225 (US).

(81) Designated States: AU, CA, GM, GW, ID, JP, MX, European patent (AT, BE, CH, DE, DK, ES, FI, FR, GB, GR, IE, IT, LU, MC, NL, PT, SE).

Published
With international search report.
Before the expiration of the time limit for amending the claims and to be republished in the event of the receipt of amendments.

(54) Title: INTERNET PHONE SYSTEM AND DIRECTORY SEARCH ENGINE USING SAME

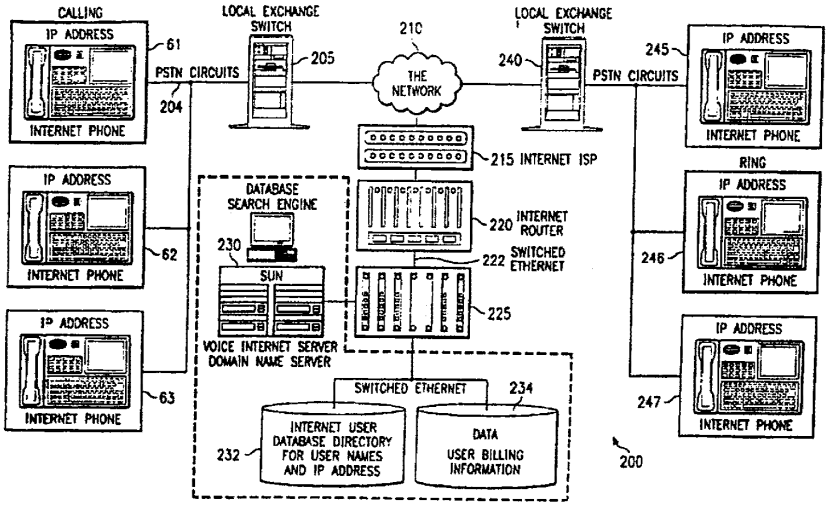

(57) Abstract

An Internet compatible dialer pad is used to dial into an Internet server to provide services similar to those found on the Plain Old Telephone System ("POTS"). The dialer pad has an integrated modem set, an extended keypad with alphanumeric entry keys and function keys, display screen and display electronics that renders visual call progress information to the user as well as other communications indicators and related information about the current Internet connection. The dialer uses the Public Switched Telephone System ("PSTN") and standard LAN/WAN technology to give the user entry into a plurality of Internet calling functions. An Internet database is maintained and permits the dialing party to obtain callee information by entering alphanumeric characters via the dialer. Links from the PSTN to an Internet data base are not restricted to a specific digital data protocol.

FOR THE PURPOSES OF INFORMATION ONLY

Codes used to identify States party to the PCT on the front pages of pamphlets publishing international applications under the PCT.

AL	Albania	**ES**	Spain	**LS**	Lesotho	**SI**	Slovenia
AM	Armenia	**FI**	Finland	**LT**	Lithuania	**SK**	Slovakia
AT	Austria	**FR**	France	**LU**	Luxembourg	**SN**	Senegal
AU	Australia	**GA**	Gabon	**LV**	Latvia	**SZ**	Swaziland
AZ	Azerbaijan	**GB**	United Kingdom	**MC**	Monaco	**TD**	Chad
BA	Bosnia and Herzegovina	**GE**	Georgia	**MD**	Republic of Moldova	**TG**	Togo
BB	Barbados	**GH**	Ghana	**MG**	Madagascar	**TJ**	Tajikistan
BE	Belgium	**GN**	Guinea	**MK**	The former Yugoslav Republic of Macedonia	**TM**	Turkmenistan
BF	Burkina Faso	**GR**	Greece			**TR**	Turkey
BG	Bulgaria	**HU**	Hungary	**ML**	Mali	**TT**	Trinidad and Tobago
BJ	Benin	**IE**	Ireland	**MN**	Mongolia	**UA**	Ukraine
BR	Brazil	**IL**	Israel	**MR**	Mauritania	**UG**	Uganda
BY	Belarus	**IS**	Iceland	**MW**	Malawi	**US**	United States of America
CA	Canada	**IT**	Italy	**MX**	Mexico	**UZ**	Uzbekistan
CF	Central African Republic	**JP**	Japan	**NE**	Niger	**VN**	Viet Nam
CG	Congo	**KE**	Kenya	**NL**	Netherlands	**YU**	Yugoslavia
CH	Switzerland	**KG**	Kyrgyzstan	**NO**	Norway	**ZW**	Zimbabwe
CI	Côte d'Ivoire	**KP**	Democratic People's Republic of Korea	**NZ**	New Zealand		
CM	Cameroon			**PL**	Poland		
CN	China	**KR**	Republic of Korea	**PT**	Portugal		
CU	Cuba	**KZ**	Kazakstan	**RO**	Romania		
CZ	Czech Republic	**LC**	Saint Lucia	**RU**	Russian Federation		
DE	Germany	**LI**	Liechtenstein	**SD**	Sudan		
DK	Denmark	**LK**	Sri Lanka	**SE**	Sweden		
EE	Estonia	**LR**	Liberia	**SG**	Singapore		

INTERNET PHONE SYSTEM AND DIRECTORY SEARCH ENGINE USING SAME

TECHNICAL FIELD

The invention relates in general to a system for transmitting voice date over the Internet and, more specifically, to a network architecture that permit voice communications using the Internet Protocol with alphanumeric to Internet address conversion using a directory search engine and a data base of potential callees.

Bright House Networks - Ex. 1008, Page 1279

BACKGROUND OF THE INVENTION

The Internet has become the information "superhighway" of choice for an ever increasing number of individuals who have turned to it as an inexpensive and effective way of exchanging electronic data and information. While often thought of as a world-wide network, in reality the Internet is comprised of numerous different networks throughout the world which are linked together using a common routing protocol known as the Internet Protocol ("IP"). This architecture provides widespread access from an unspecified number of terminals or other dial-up equipment around the world.

Individual users, groups and other entities are identified on the Internet by a unique address conforming to the IP. A local access hub provides users with an entry way into the Internet network and acts as the exchange point for both incoming and outgoing data. The data flows along virtual channels consisting of a plurality of gateways, data routers and other physical equipment which work together to form a signal path from message origin to its intended destination. Since a point-to-point connection is never established, the costs to the user are limited to those charged by the local Internet access provider and/or a nominal periodic access fee.

Bright House Networks - Ex. 1008, Page 1280

The low cost associated with Internet use has spurred the development of audio applications that allow users to receive and transmit compressed Internet voice messages across the Internet. Typically, a user at one end of the connection speaks into a microphone attached to a Personal Computer ("PC"). The microphone carries the audio voice signal to a processor board in the PC which digitizes the signal and creates a digital voice file. The voice file is compressed and transferred to a selected recipient at a distant point on the Internet. Once received, the voice file is decompressed and converted via digital signal processing to an audible signal intelligible to the human ear.

The typical Internet audio set includes a PC, modem, Internet access software, file compression software and operating system. The user executes the software off the PC's hard disk or floppy drive and the modem provides the hardware communications link with the local Internet access provider. This operation involves turning the PC ON, executing the software, gaining access to the Internet, recording the voice file and transmitting its intended recipient. At the receiving end, the process is substantially the same but in reverse.

While such applications are available and useful for

Bright House Networks - Ex. 1008, Page 1281

inexpensive long distance calling on the Internet, they do require ownership or access to a computer and some knowledge regarding the installation, operation and execution of the accompanying software. In short, these prior art audio sets have not yet replaced the Plain Old Telephone System ("POTS") on a widespread basis. The POTS, on the other hand, has widespread appeal and provides intuitive operation.

In essence, audio applications for the Internet are still in their infancy. Problems with voice quality and awkward user interfaces detract from their use. As such, the wide array of telephone services available to POTS users are not yet available to complement existing Internet audio sets.

More specifically, with present Internet audio sets, the user is required to know the address of the voice file recipient. When an IP address is dialed, up to 20 digits have to be entered by the caller. Remembering and entering these digits is neither appealing nor practical in most situations.

Before Internet calling becomes a standard in main stream long distance calling applications, the process needs to be eased for the average garden variety long distance caller who would prefer to place a call in the easiest

Bright House Networks - Ex. 1008, Page 1282

manner possible. Use of the POTS along with their chosen long distance carrier meets their needs since a long distance call over the POTS requires no special equipment, knowledge or information and results in a greater chance of getting through the intended callee.

Thus, a system that combine the simplicity of operation of the POTS with low cost audio access to the Internet would provide numerous advantages over prior Internet audio sets.

Bright House Networks - Ex. 1008, Page 1283

SUMMARY OF THE INVENTION

It has been found the prior audio communications systems for the Internet are cumbersome to use and do not provide the functionality long distance callers have come to expect from their more familiar telephone set.

As such, it is a primary object of the present invention to provide a system that simplifies the use of the Internet for long distance calling applications. The invention defines a combination of network elements that provide the user with a POTS look-a-like dialing pad. The dialing pad has an alphanumeric keypad and screen display which provides visual call progress information to the user.

Another object of the present invention is to provide a device that is similar to the POTS. In this regard, a true telephone phone set, one that doesn't require to be booted up to run a standard PC, is provided with a phone keypad for DTMF dialing similar to a regular phone. The set includes a hand set with a receiver and mouth piece and can be used to make voice connections via the PSTN and compressed audio using the Internet protocol.

Still another object of the present invention is to provide a simplified calling means for originating a call on the Internet. A list of known callees can be stored internally inside the dialer and retrieved by the user prior

Bright House Networks - Ex. 1008, Page 1284

to going off-hook. For unknown callee addresses, a method of address conversion is provided wherein the user enters the alphabetic name of a potential caller on the dialing pad and the name is searched on a user data base to arrive at the corresponding Internet address.

Yet another object of the present invention is to provide a means of initiating an Internet call without prior knowledge of the callee's Internet address. In this regard, an directory engine and user data base of known IP addresses is maintained on a specialized network server accessed through the pad, the PSTN and the other existing Internet components. When a hit is made on the data base, the name is returned to the user on the dial pad's display screen. A caller simply enters the alphabetic string name and the directory engine converts the string to its Internet address equivalent for the callee or callees in the database. When more than one hit is made, all of the matching names are displayed on the dialer screen permitting the calling party to scroll the list and selected the intended callee.

In one aspect, the present invention defines an Internet compatible dialer pad with an integrated modem set that is operated by the user via an extended keypad with alphanumeric entry keys and function keys. The dialer has an integrated display screen and display electronics that

Bright House Networks - Ex. 1008, Page 1285

renders visual call progress information to the user as well as other communications indicators and related information about the current Internet connection.

In another aspect of the invention, the dialer uses the Public Switched Telephone System ("PSTN") and standard LAN/WAN technology to gain access to a plurality of Internet enhanced calling systems. A directory search engine and user data base permit the caller to obtain callee information by entering alphanumeric characters on the dialer's keypad. Links from the PSTN to an Internet data base are not restricted to a specific digital data protocol. Suggested transmission protocols for the data base and search engine include ATM, ISDN or others depending on data traffic.

For a more complete understanding of the present invention, including its features and advantages, reference is now made to the following detailed description, taken in conjunction with the accompanying drawings.

Bright House Networks - Ex. 1008, Page 1286

BRIEF DESCRIPTION OF THE DRAWINGS

In the drawings:

Figure 1 illustrates a prior art Internet audio set;

Figure 2 is a top side view of the Internet dialer pad according to part of the invention;

Figure 3 is a detailed circuit diagram for the dialer pad shown in Figure 2 according to embodiment of the invention;

Figure 4 is an architectural block diagram of an Internet directory search engine according to one embodiment of the invention;

Figure 5 is an architectural block diagram of an enhanced Internet phone directory search engine according to one embodiment of the invention; and

Figure 6 is a call progress flow diagram for an Internet phone directory connection according to one embodiment of the invention.

Corresponding numerals refer to corresponding parts in the figures unless otherwise indicated.

Bright House Networks - Ex. 1008, Page 1287

DETAILED DESCRIPTION OF THE INVENTION

In Figure 1, a prior art Internet audio set is shown and denoted generally as 10. Internet set 10 includes a personal computer (PC) 15 with a keyboard 17 and monitor 19. Inside the PC 15 are a plurality of application programs which are stored generally on hard disk 21. A microphone 23 is communicably attached to the PC 15 via cable 25 which carries audio signals from the user to a processing board 27. The processing board 27 digitizes the voice signal and creates a voice file which can be stored on hard disk 21 prior to transmission.

In operation, a user gains access to the Internet via an application program stored on hard disk 21. The manner and steps involved in such a process vary depending on the type of PC 15 and software program used. A plurality of Internet access providers may be used for this purpose wherein the user subscribes to the provider and uses a modem 29 to establish the communications link between the user and the provider. In general, the user executes a voice recording program stored on hard disk 21. The voice recording program accepts an audio signal input via the microphone 23 and operates the processing board 27. Other PC 15 functions can be operated using keyboard 17.

The processing board 27 receives the audio analog

Bright House Networks - Ex. 1008, Page 1288

signal from the user via the microphone 23 and cable 25 and creates a corresponding digital file using on-board digital signal processing. The techniques and methods of digital signal processing are well known in the industry and by those skilled in the art.

Next, the user selects an intended recipient from the application program interface and the digital audio file is sent to the chosen recipient via the modem 29. As shown, the modem 29 is communicably attached via cable 31 to the Public Switched Telephone Network ("PSTN") 33. Call and transmission progress information are displayed on monitor 19 depending on the status of the connection. For example, the monitor 19 can display the recipient, connection status and latest activity. Other information can be displayed depending on the software program used and the functionality of the Internet audio set 10.

The audio set 10 can also be used to receive audio files using the PSTN 33 connection and modem 29. In general, a transmitting party at a distant location uses the address of the audio set 10 to transmit digitized audio messages over the Internet in the manner described above. The audio set 10, and more specifically processing board 27, receives the incoming audio signal and transforms it to its corresponding analog equivalent. The analog audio signal is

Bright House Networks - Ex. 1008, Page 1289

broadcast over the PC speaker 35 which is controlled by the audio application software.

Thus, the prior art audio set 10 provides a mechanism for voice communications over the Internet using the above described process and hardware shown in Figure 1. Variations of set 10 are also available using similar methods of operation and allowing users a plurality of similar functionality. Such systems, however, are substantially similar in that they depend on use of a PC 15, application programs, and other similar equipment as shown in Figure 1.

Turning now to Figure 2, one aspect of the invention is shown, the phone dialing pad, and denoted generally as 50. Dialing pad 50 has many of the features of a Plain Old Telephone System ("POTS") including hand set 55 which has an ear piece 58 and a mouth piece 56 for hearing and speaking, respectively. The hand set 55 can be used to transmit and receive the pure analog audio signals, which are digitized and processed for transmission on the network.

As shown, the hand set 55 is communicably attached via cable 57 to base 59. The base 59 houses the various telecommunications devices as herein described and as can be appreciated by those skilled in the art.

Accessible from on the top 61 of base 59 are various

Bright House Networks - Ex. 1008, Page 1290

keys and input devices which control the operation and functionality of the dialing pad 50. An alphanumeric keyboard 63 provides a QWERTY type interface from which the user can enter alphabetic and numeric entries and messages to be included in the Internet message stream. The keyboard 63 is similar to the input device of a typical desktop computer.

In one embodiment, a numeric keypad 65 is shown and provided to give the identical Dual Tone Multifrequency ("DTMF") push button operation of a POTS. Thus, in operation a user lifts the hand set 55 and dials into the PSTN using keypad 65 to make normal voice DTMF telephone calls. In this way, POTS functionality is provided by the dialing pad 50 according to one embodiment.

A microphone 67 is provided on the base 59 and used to receive and transmit audible signals from and to the user. The microphone 67 is controlled by internal electronics inside the base 59 (see Figure 3) and provides audible incoming and outgoing audio signals. In the alternative, audio signals can be received and transmitted via the hand set 55 using the ear 56 piece and mouth piece 58, respectively.

According to one embodiment, an Internet access button 69 is provided on the base 59 and used to switch between

Bright House Networks - Ex. 1008, Page 1291

normal DTMF voice calls and Internet dial-up operations. In this way, access button 69 can be used to initiate an Internet connection using the internal modem set (not shown in Figure 2) without interrupting the present DTMF initiated switched voice connection.

An integrated display screen 71 is provided to give the user visual information about the current Internet connection as well as other connection/status information. For example, the display screen 71 can show the current callee, a stored list of available callees including their Internet addresses, the identity of the transmitting party and his Internet address, a list of the most currently received or transmitted messages or other similar information according to the preprogrammed functionality of the dialer pad 50.

As such, it should be understood that a wide range of information may be displayed on the display screen 71. In the preferred embodiment, display screen 71 is a liquid crystal display of the type commonly found in industry.

The dialing pad 50 connects to the PSTN via jacks 80 and 82 which provide dual line access to the PSTN via outlets 84. This configuration provides concurrent DTMF and Internet connections. In an alternative embodiment, single line access is provided wherein the dialing pad 50 is used

Bright House Networks - Ex. 1008, Page 1292

as either a DTMF voice or Internet audio set per single session. In one embodiment, the connection mode is selected by the user with button 69.

A connection 88 to a computer 90 is also provided to permit the transfer of Internet formatted messages between the dialing pad 50 and the computer 90. An RS232 jack 86 is the preferred interface between the Internet phone 50 and the computer 90 for serial data transfers although other connection protocols, such as parallel bus, may be used.

In Figure 3, a circuit diagram for the dialing pad 50 is shown and denoted generally as 100. Circuit diagram 100 is one possible arrangement of components. Those skilled in the art will appreciate that other configurations may be employed. The components are maintained inside the base 59 and assembled during manufacturing by well known means such as on a printed circuit board. Standard off-the-shelf components which are readily available in the market place may be used for most devices and, as such, no particular or specific device is necessary to achieve the objects of the invention as herein described.

As shown, a telephone line interface 102 serves as a connection between the PSTN and the dialing pad 50. A supervisory circuit 104 provides the Onhook/Offhook mechanism between the interface 102 and the PSTN and is

Bright House Networks - Ex. 1008, Page 1293

operated by the optical isolator 106. The analog signal is received superimposed on a DC level carrier which is isolated via the transformer primary 108.

The analog signal is dropped across the secondary portion 110 of the line transformer where it is load balanced and received by the modem data pump 112. In essence, the telephone line interface 102, isolator circuit 106, and transformer 108, 110 form a direct access arrangement of the type well known by those skilled in the art. It should be understood, however, that other similar configurations and methods of interfacing the modem data pump 112 to the PSTN can be used.

The modem data pump 112 is controlled by CPU controller 116 via path 114. In various embodiments, the data pump 112 supports a plurality of data transmission, compression and error correction protocols including, without limitation, V.34, V.32, V.22, V.42 LAPM, MNP2-5 and still others. Such protocols are well known by those skilled in the art.

An audio compression circuit 118 is also shown coupled to the data pump 114 via path 117 which supports known Internet audio standard protocols such as G.723, G.725 and G.729. The compression circuit 118 also supports G.711 which is the standard audio protocol for all POTS. As shown, circuit 118 is coupled to the primary 108 via coil

Bright House Networks - Ex. 1008, Page 1294

120 allowing bidirectional audio transmission through and from the PSTN.

A speaker 130 and microphone 132 are provided to provide the user with an audible signal output and voice input, respectively. During an Internet audio session, the optical isolator circuit 106 enables the microphone 132 portion of the circuit 100 via path 107. Signals from the microphone 132 are received by the compression circuit 118 and transferred to the data pump 112 for signal processing and transmission on the PSTN to its intended recipient using well known modulation/demodulation techniques.

Likewise, signals received from the PSTN via the data pump 112 are deencoded by the compression circuit 118 and delivered to the user via the speaker 130 as an audible output signal. The corresponding multiplexing logic (M1 and M2) are shown arranged in Figure 3 per one embodiment.

DTMF functionality is supported via transceiver circuit 140 and phone keypad 142. This arrangement gives the Internet phone 50 DTMF dial-up capabilities for normal voice connections on a switched circuit basis and alphanumeric entry during Internet sessions. The phone keypad 142 combines the inputs from the keyboard 63 and keypad 65 shown in Figure 2 and is coupled to the controller 116 via pathway 144. The controller 116 is programmed to select the correct

Bright House Networks - Ex. 1008, Page 1295

input device depending on the type of connection, either standard DTMF or Internet Protocol.

The preferred display screen 71 is a Liquid Crystal Display of the type known to those skilled in the art and is controlled by display driver circuit 150 and controller 116 via path 144. Other system components include memory circuits 155 and 157, which, provide the microprocessor with permanent and erasable memory area segments for performing the various functions herein described. Such functions include power-up sequences, system checks and other standard system verification processes as well as call connect functions, user features and still others.

One feature of the Internet phone is the ability to connect to existing Internet access provider services without requiring extensive software knowledge by the user. In one embodiment, access parameters are maintained on the erasable and programmable memory circuit 157. The access parameters control how the phone 50 connects to the user's Internet access provider.

In one embodiment, the user is prompted to enter a plurality of access parameters such as the provider's telephone number, IP address, domain name server address, user name, password and other similar parameters during initial setup. The Internet access setup program is stored

Bright House Networks - Ex. 1008, Page 1296

internally by the controller circuit 116 and input by the user is accomplished using the phone keypad 142. These parameters are stored in memory circuit 157 and used for connection to the provider once the Internet access button 69 is depressed.

The controller 116, as shown, initiates the connection using the parameters stored in the memory circuit 157. In this regard, a setup program can be internally maintained and executed upon initial use or setup by the user.

Also, the erasable memory circuit 157 can be used to store a list of common recipients by their Internet addresses. Alternatively, the user creates new recipients for further use and retrieval using the alphanumeric keyboard 63 of the phone keypad 142.

Other system components are illustrated in Figure 3 such as watch dog timer circuit 160, audio speaker phone 162 and ringer adjustment circuit 165 all of which are well understood by those skilled in the art.

Turning now to Figure 4, an architectural model illustrating the Internet address search directory system according to another aspect of the invention is shown and denoted generally as 200. As shown, a plurality of caller dial pads 201, 202 and 203 are connected to a local exchange switch 205 via PSTN circuits 204. The PSTN circuits 204 and

Bright House Networks - Ex. 1008, Page 1297

local exchange switch form part of the local telephone network within the user's geographic area.

For Internet connections, exchange 205 routes the incoming calls from the dial pads 201, 202 and 203 to the user's Internet Service Provider ("ISP") 215 via established Network 210 paths. Next, the message is parsed and decoded to determine the recipient before routing 220 it using switched Ethernet circuits 222. As is appreciated by those skilled in the art, various routing methods and network devices 225 may be employed to establish the end-to-end message path.

As shown, a plurality of callees 245, 246 and 247 are situated at a second location. The callees 245, 246 or 247 may have an established Internet audio connection and prepared to receive the audio message from any one of the callers 201, 202 or 203. Alternatively, the callees 245, 246 or 247 may dial in to their service provider 215 and obtain the sent audio message at a later time. Typically, the audio file message is stored by the service provider in an electronic mail box until it is delivered to its intended recipient.

In short, audio calls made from the dial pads 201, 202, 203 are routed through the network 210 and reach a second local exchange switch 240 at a distant geographic location.

Bright House Networks - Ex. 1008, Page 1298

The local carrier determines the circuit to the appropriate callee 245, 246, or 247, who, in turn, can respond to original caller in like fashion. The process can be repeated to permit conversations of varying lengths similar to those achieved with the POTS.

Address Conversion

Using the Data Base Search Engine 230, a caller (201, 202 or 203) may initiate a call to a callee (245, 246 or 247) without prior knowledge of the callee's Internet address. The dial pad 50 has an internal memory area where a list of callee Internet addresses can be stored for future call operations. Alternatively, the search engine 230 can store the Internet addresses on user data base 232 and convert the alphanumeric callee identifier to its corresponding Internet address.

A callee search can also be performed using the user data base 232. A call request is made at the caller side 201, 202 or 203 using the alphanumeric keypad (63 in Figure 2). At this point, the data stream is parsed to determine if a search request has originated from any one of the dial pads 201, 202 or 203. If so, the request is forwarded to the Data Base Search Engine 230 which is configured to process the request for authorized users. This functionality can be provided to users who have ordered or

Bright House Networks - Ex. 1008, Page 1299

cleared for Internet voice services similar to ordering calling features such as waiting or call return with the POTS.

Alternatively, the audio functions can be provided to users on a per use charge basis. If so, the billing information can be maintained on the user billing information database 234.

The search engine 230, user data base 232 and user billing information database 234 provide the means for converting alphanumeric call identifiers to their equivalent Internet address format thus eliminating the need to remember and enter numeric Internet routing addresses conforming to the Internet Protocol.

This greatly simplifies the use of the Internet for long distance calling applications. When a callee's address matching the caller's 201, 202, 203 search request is found, the name is displayed on the display screen 71 of the dial pad 50. The caller then has the option of completing the call to the address. When more than one hit is made, the names of the qualifying user callees are displayed. The caller then has the option of selecting from a scrolled list of potential users using the dial pad's keyboard 63 to select the intended caller.

The architectural scheme of Figure 4 can be enhanced to

Bright House Networks - Ex. 1008, Page 1300

provide further audio functionality over the Internet. In Figure 5, a more sophisticated Internet phone directory search engine topology is depicted and denoted generally as 250. T1 trunk lines 252, 300 connect the local exchange switches 205, 240 to the local ISPs 215, 305 and to network switches 302, 304. Likewise, ISDN circuits 254, 256 can provide the link between the network 210 and servers functions 308, 310 and 312. This topology bridges service providers of varying levels of functionality (those that do not provide directory search functions) to an ISP having the Internet conversion features such as those described herein.

Thus, a single user data base 232 can be accessed by a wide range of ISPs at different locations. Links from the PSTN to an Internet data base are not restricted to a specific digital data protocol. Suggested transmission protocols for the data base and search engine include ATM, ISDN or others depending on data traffic.

The bridge, router gateways 220 and 258, provide the virtual pathways from ISPs 215 and 305 to servers 308, 310 and 312. A single user data base 232, user billing information database 234, mail server 276 and email data base 278 provide network wide functionality.

Also shown is ATM network server 262 directly coupled to the Internet DNS 308 giving ATM network users the same

Bright House Networks - Ex. 1008, Page 1301

Internet conversion advantages of the present invention. An audio conversion switch 260 provides the conversion from Internet audio formats G.725, G.729 to audio phone formats G.711.

Thus, by providing a plurality of connections between the audio conversion servers 308, 310, 312 and other network Internet access points, users at many different network levels can take advantage of the present invention.

Turning now to Figure 6, a call progress flow diagram for connection to the directory search engine 230 is shown and denoted generally as 350. The process starts with step 357 wherein a user 355 initiates a call by dialing out to establish an Internet connection 360. A successful connection is acknowledged 362 and the call routed 364 to the directory engine 365. The directory engine 365 transmits a response acknowledge 366 to the user 355 and prompts the user 355 for a callee name 368.

Next, the user 355 enters an alphanumeric character string and sends it 370 in an Internet formatted message to the directory engine 365. The message is parsed and a data base search is performed 372 to find all user names and addresses of matching callees. Once the search is completed, the database responds 374 and the search results are transmitted to the user 376.

Bright House Networks - Ex. 1008, Page 1302

The calling party selects a callee from the response list 378 and a record of the callee's Internet address is sent to the user data base 380 for future reference. At this point, the caller can place the call using the found Internet address or start another search 382. If a dial attempt is made, the user accepts the address and dials 386 to the selected callee.

While this invention has been described and referenced to illustrative embodiments, the description is not intended to be construed in a limiting sense. Various modifications and combinations of illustrative embodiments as well as other embodiments and inventions will become apparent to those persons skilled in the art upon reference or description. It is, therefore, intended that the pendent claims encompass any such modifications or embodiments.

Bright House Networks - Ex. 1008, Page 1303

What is claimed is:

1. An network system for converting an alphanumeric Internet callee identifiers to their corresponding Internet Protocol address comprising:

a plurality of caller dial pads each of which has an alphanumeric keyboard for entering the Internet callee identifiers, a display screen and an integrated modem set for dialing over the Internet;

a first local exchange switch within the geographic vicinity of said caller dial pads;

switched telephone circuits extending from the caller dial pads to said first local exchange switch that provide telecommunication pathways to the Internet;

at least one Internet service provider communicably connected to the Internet for receiving said Internet callee identifiers through said local exchange switch;

an Internet router coupled to said Internet service provider;

a plurality of switched protocol circuits for receiving Internet formatted data from said Internet router; and

an Internet directory search engine communicably coupled to said switched protocol circuits for receiving said Internet callee identifiers.

Bright House Networks - Ex. 1008, Page 1304

2. The network system of Claim 1 wherein said Internet directory search engine further comprises:

an Internet Domain Name Server bidirectionally coupled to said switched protocol circuits; and

an Internet user data base containing a plurality of callee Internet Protocol formatted addresses, said data base accessible to said server.

3. The network system of claim 1 further comprising:

a second local exchange switch communicably attached to the Internet;

a plurality of callee dial pads communicably attached to said second local exchange switch via a plurality of switched telephone circuits, said callee dial pads configured to receive Internet formatted messages origination from said caller dial pads via the Internet.

Bright House Networks - Ex. 1008, Page 1305

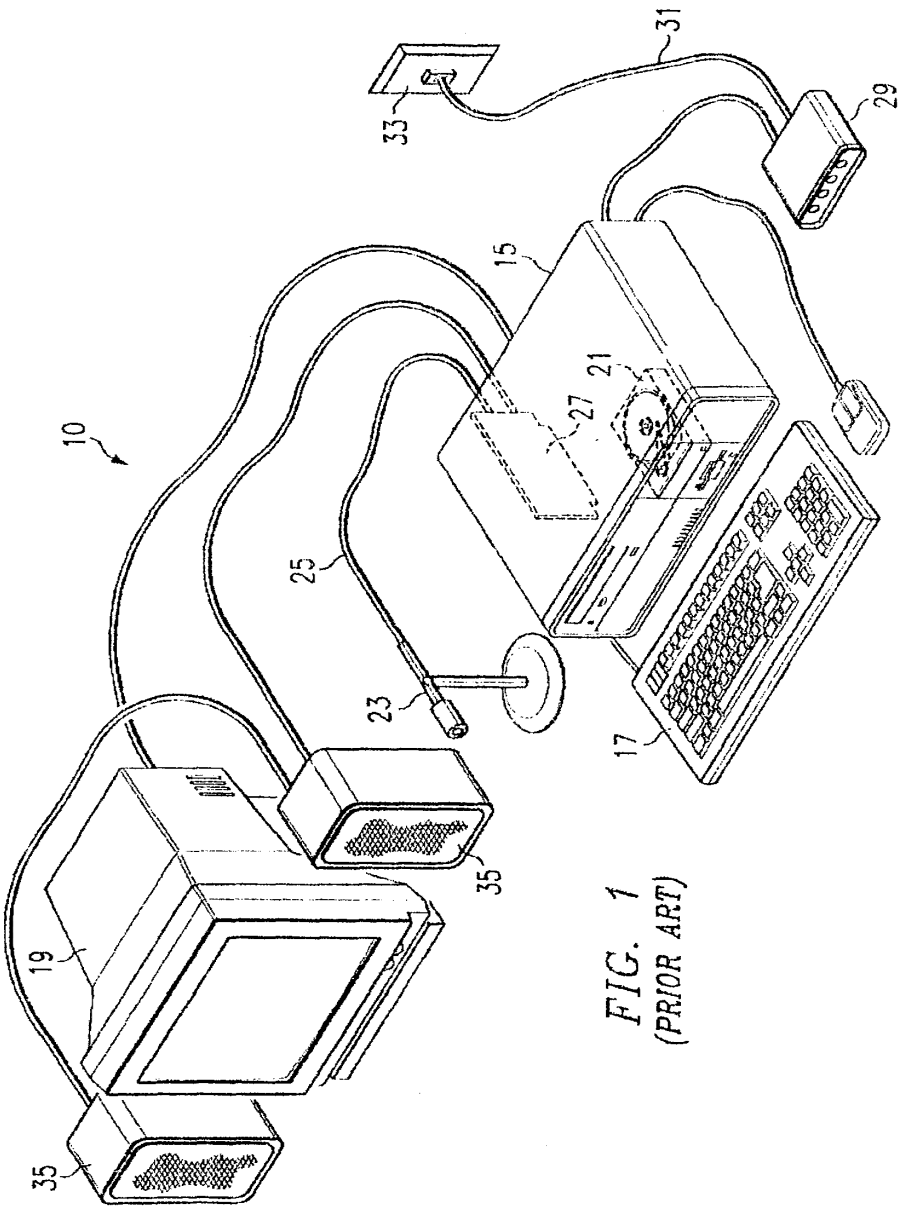

FIG. 1
(PRIOR ART)

FIG. 2

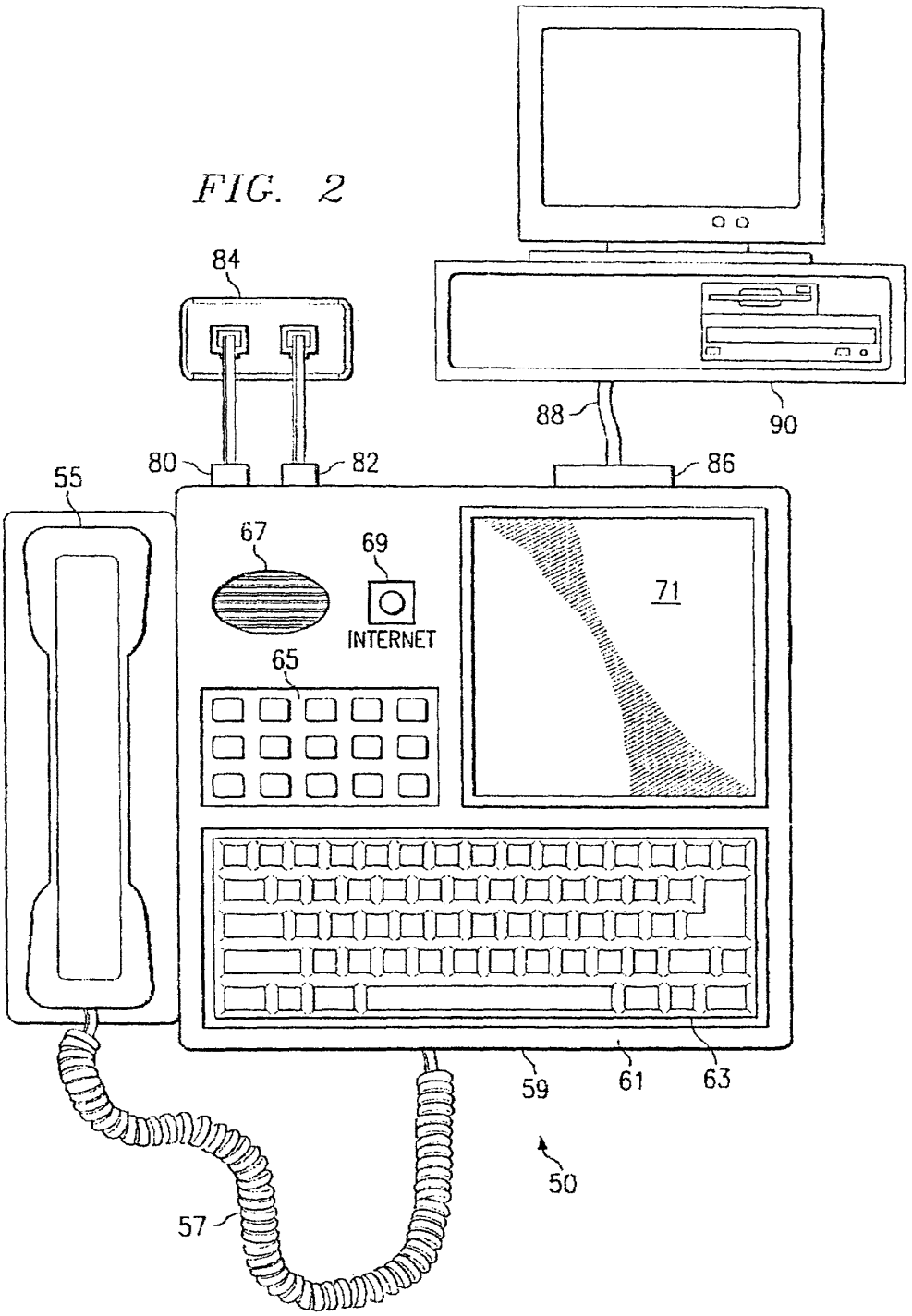

Bright House Networks - Ex. 1008, Page 1307

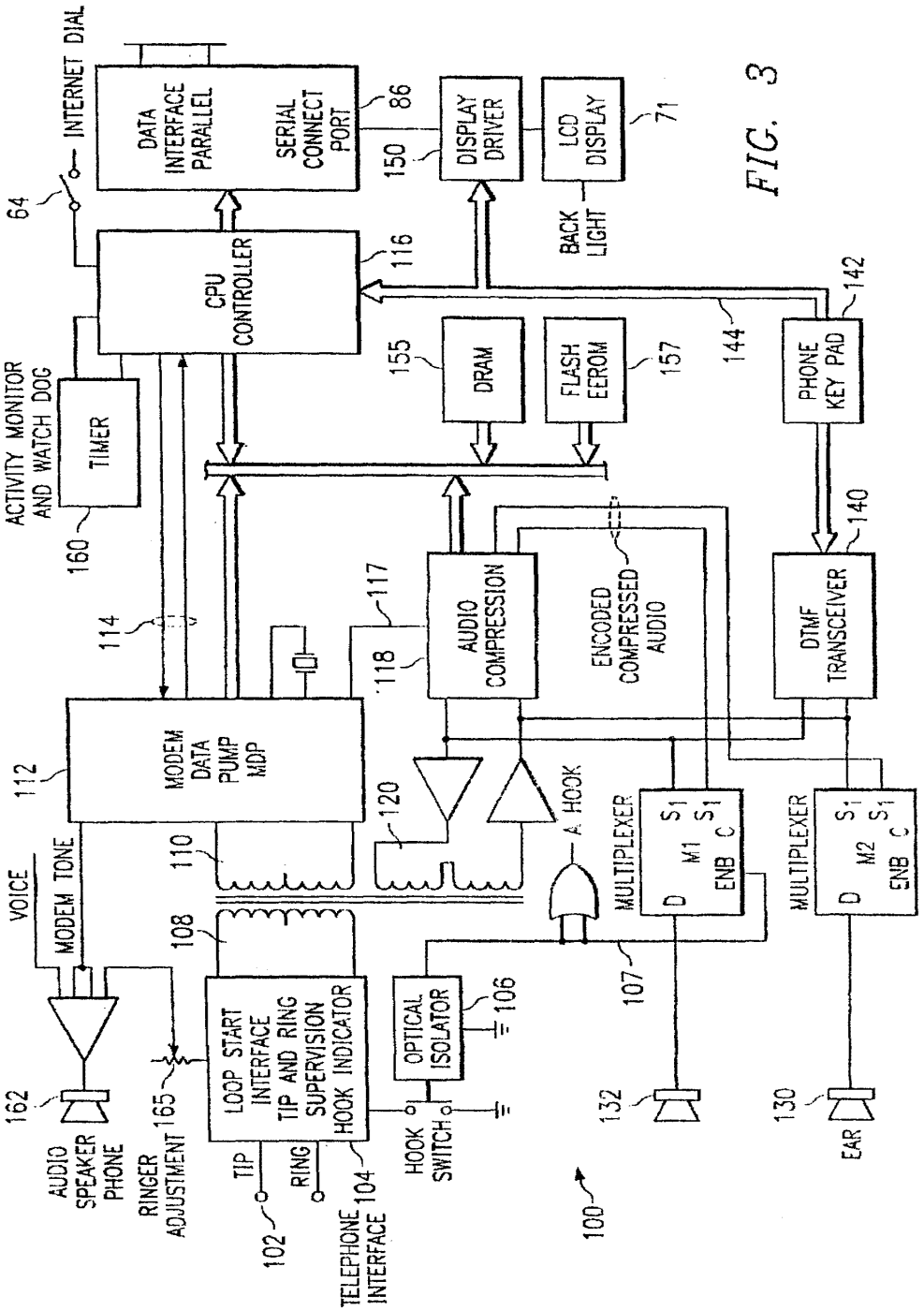

FIG. 3

Bright House Networks - Ex. 1008, Page 1308

SUBSTITUTE SHEET (RULE 26)

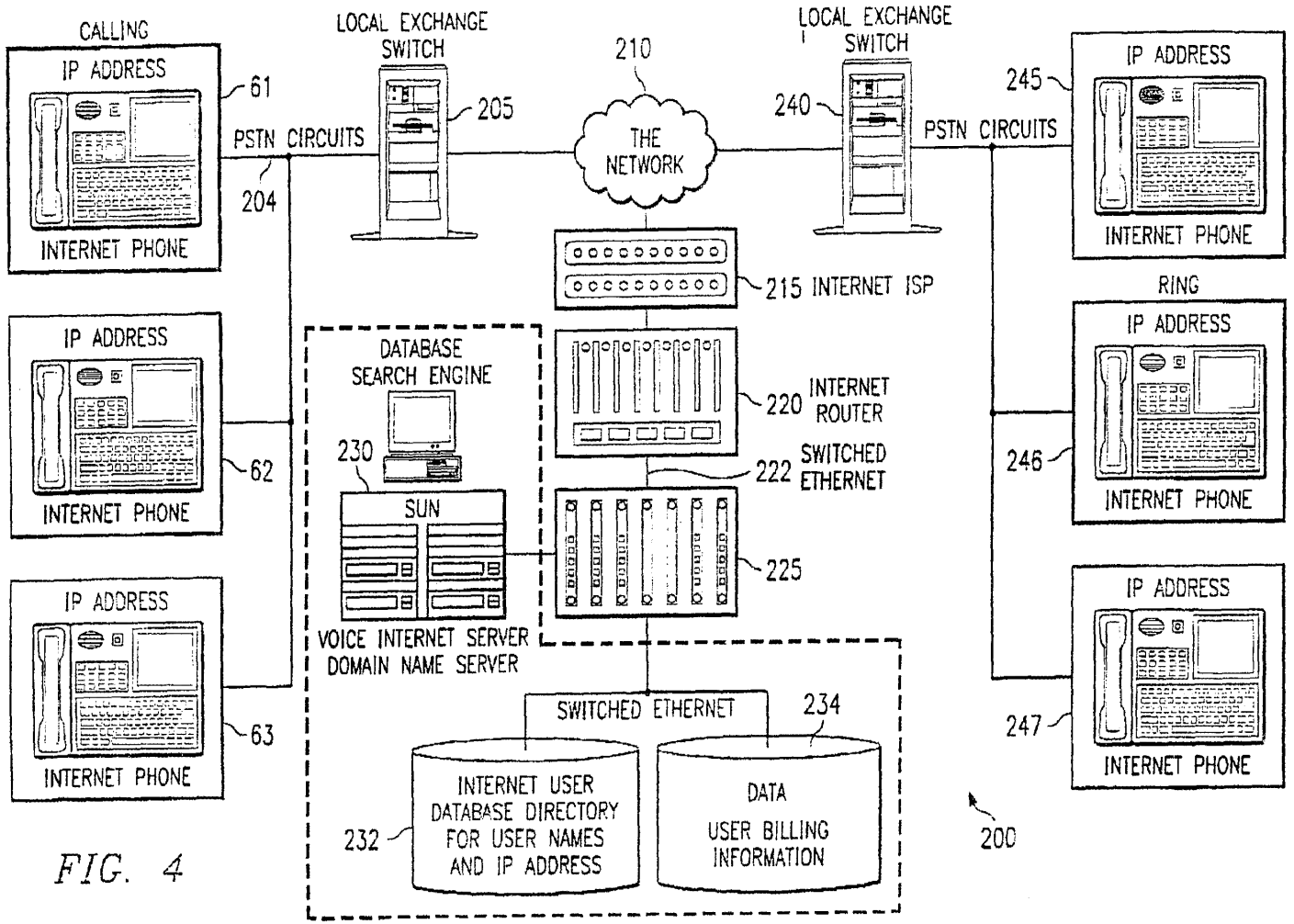

FIG. 4

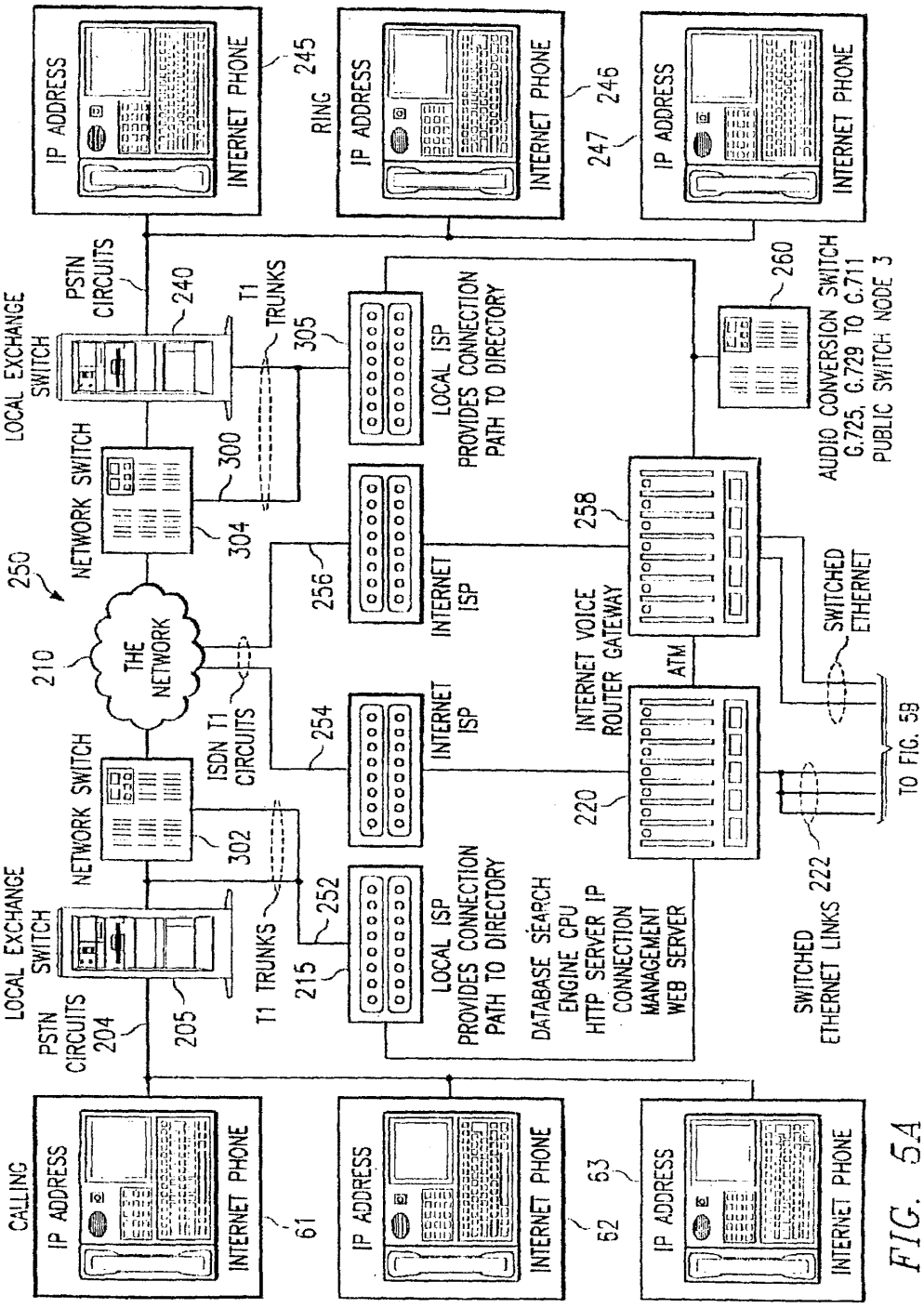

FIG. 5A

Bright House Networks - Ex. 1008, Page 1310

FIG. 5B

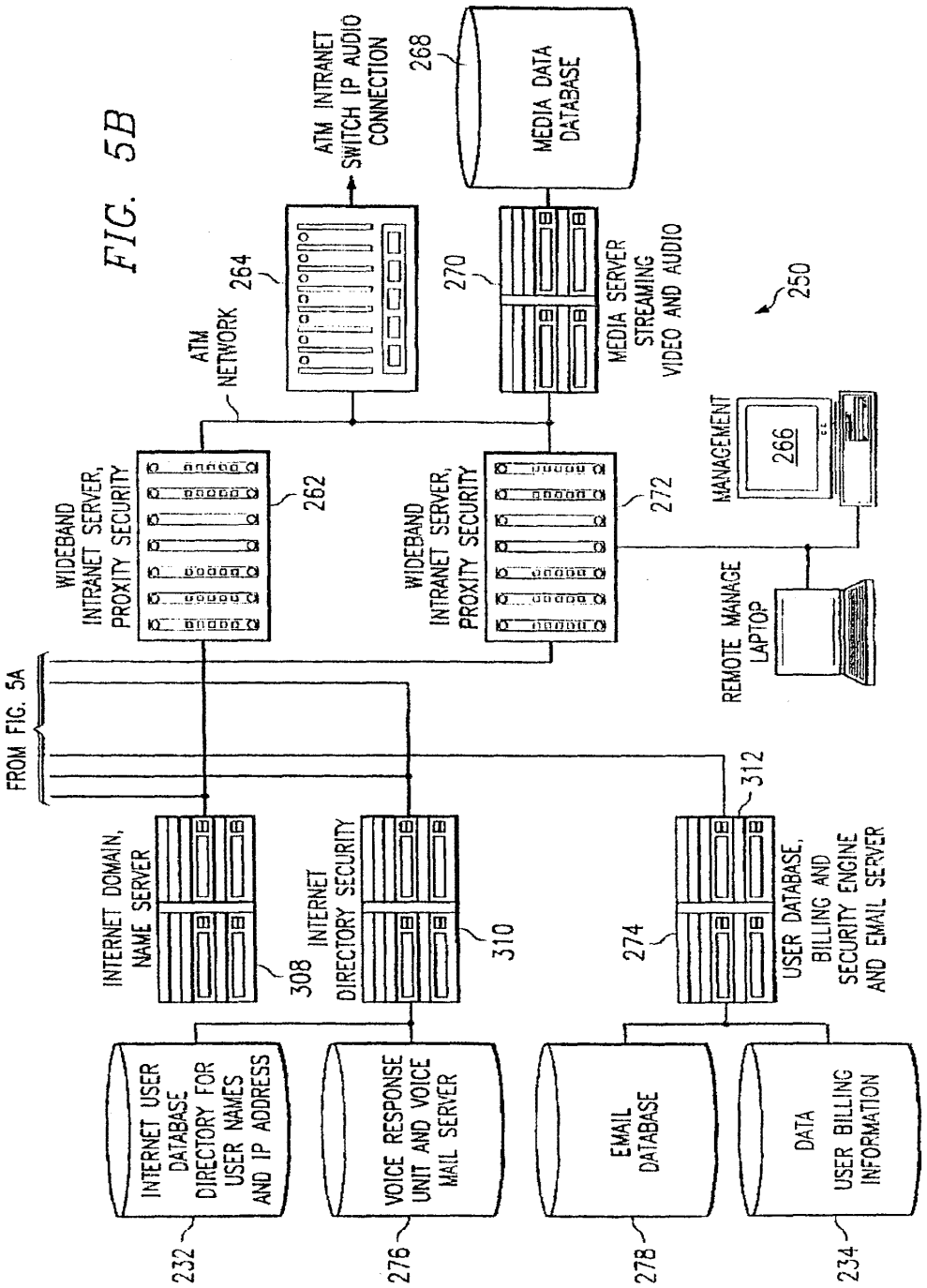

Bright House Networks - Ex. 1008, Page 1311

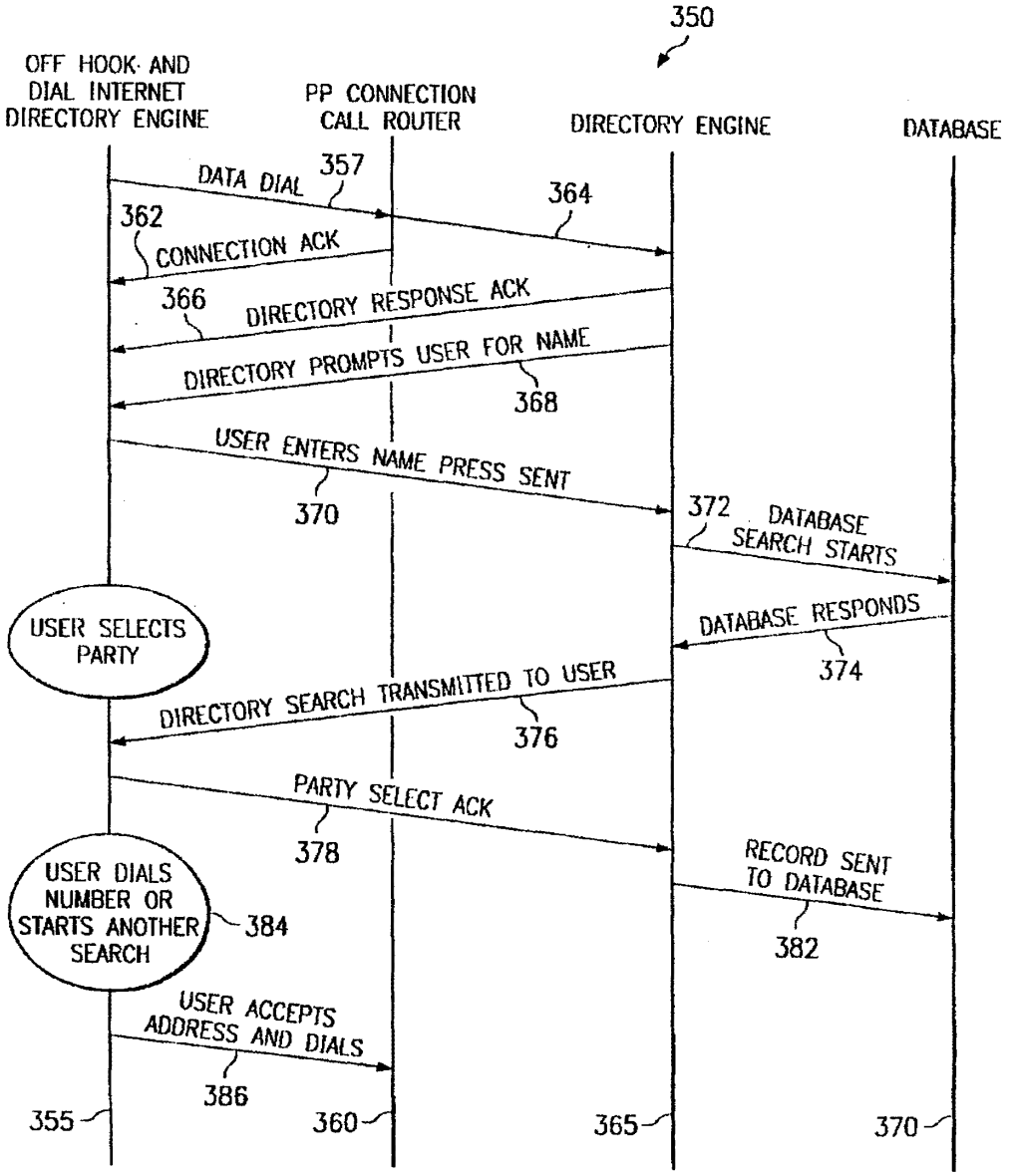
350
OFF HOOK AND DIAL INTERNET DIRECTORY ENGINE
PP CONNECTION CALL ROUTER
DIRECTORY ENGINE
DATABASE
DATA DIAL
357
364
362
CONNECTION ACK
366
DIRECTORY RESPONSE ACK
DIRECTORY PROMPTS USER FOR NAME
368
USER ENTERS NAME PRESS SENT
370
372
DATABASE SEARCH STARTS
USER SELECTS PARTY
DATABASE RESPONDS
374
DIRECTORY SEARCH TRANSMITTED TO USER
376
PARTY SELECT ACK
378
RECORD SENT TO DATABASE
382
USER DIALS NUMBER OR STARTS ANOTHER SEARCH
384
USER ACCEPTS ADDRESS AND DIALS
386
355
360
365
370

FIG. 6

INTERNATIONAL SEARCH REPORT

Inter onal Application No
PCT/US 97/23816

A. CLASSIFICATION OF SUBJECT MATTER
IPC 6 H04M7/00 H04M1/00 H04M3/50 H04L29/06

According to International Patent Classification(IPC) or to both national classification and IPC

B. FIELDS SEARCHED

Minimum documentation searched (classification system followed by classification symbols)
IPC 6 H04M H04L

Documentation searched other than minimumdocumentation to the extent that such documents are included in the fields searched

Electronic data base consulted during the international search (name of data base and, where practical, search terms used)

C. DOCUMENTS CONSIDERED TO BE RELEVANT

Category °	Citation of document, with indication, where appropriate, of the relevant passages	Relevant to claim No.
E	WO 98 12860 A (JEON CHAN KOO) 26 March 1998 see the whole document ---	1-3
P,X	EP 0 781 016 A (SONY CORP) 25 June 1997 see the whole document ---	1-3
P,X	WO 97 14238 A (INT DISCOUNT TELECOMMUNICATION) 17 April 1997 see abstract see figure 2B see page 15, line 34 - page 17, line 3 ---	1-3
A	WO 96 38018 A (KOPONEN HARRI ;KAAKKOLA MATTI (FI); MELEN BJOERN (FI); VAEAENAENEN) 28 November 1996 see page 4, line 13 - page 5, line 25 see page 10, line 23 - page 13, line 25 --- -/--	1-3

[X] Further documents are listed in the continuation of box C.

[X] Patent family members are listed in annex.

° Special categories of cited documents :

"A" document defining the general state of the art which is not considered to be of particular relevance

"E" earlier document but published on or after the international filing date

"L" document which may throw doubts on priority claim(s) or which is cited to establish the publicationdate of another citation or other special reason (as specified)

"O" document referring to an oral disclosure, use, exhibition or other means

"P" document published prior to the international filing date but later than the priority date claimed

"T" later document published after the international filing date or priority date and not in conflict with the application but cited to understand the principle or theory underlying the invention

"X" document of particular relevance; the claimed invention cannot be considered novel or cannot be considered to involve an inventive step when the document is taken alone

"Y" document of particular relevance; the claimed invention cannot be considered to involve an inventive step when the document is combined with one or more other such documents, such combination being obvious to a person skilled in the art.

"&" document member of the same patent family

1

Date of the actual completion of theinternational search	Date of mailing of the international search report
8 May 1998	15/05/1998

Name and mailing address of the ISA	Authorized officer
European Patent Office, P.B. 5818 Patentlaan 2 NL - 2280 HV Rijswijk Tel. (+31-70) 340-2040, Tx. 31 651 epo nl, Fax: (+31-70) 340-3016	Megalou, M

Form PCT/ISA/210 (second sheet) (July 1992)

Bright House Networks - Ex. 1008, Page 1313

INTERNATIONAL SEARCH REPORT

Inter onal Application No
PCT/US 97/23816

C.(Continuation) DOCUMENTS CONSIDERED TO BE RELEVANT

Category °	Citation of document, with indication,where appropriate, of the relevant passages	Relevant to claim No.
A	WO 96 20553 A (ALPHANET TELECOM INC) 4 July 1996 see page 15, line 35 - page 16, line 21	1-3
A	WO 96 32800 A (POWER CORP M) 17 October 1996 see abstract	1
A	LOW C ET AL: "WEBIN - AN ARCHITECTURE FOR FAST DEPLOYMENT OF IN-BASED PERSONAL SERVICES" WORKSHOP RECORD. INTELLIGENT NETWORK. FREEDOM AND FLEXIBILITY: REALISING THE PROMISE OF INTELLIGENT NETWORK SERVICES, 21 April 1996, pages 1-12, XP002043670 see the whole document	1-3
P,A	PATENT ABSTRACTS OF JAPAN vol. 097, no. 010, 31 October 1997 & JP 09 172459 A (SONY CORP), 30 June 1997, see abstract	1
P,A	WO 97 33412 A (THOMPSON JOSEPH B) 12 September 1997 see abstract see page 11, line 1 - page 19, line 23 see page 25, line 15 - page 27, line 24	1-3
P,A	US 5 610 910 A (LIVERMORE FREDERICK C ET AL) 11 March 1997 see column 13, line 22 - column 14, line 12	1-3
P,A	WO 97 28628 A (LABS OF ADVANCED TECHNOLOGIES) 7 August 1997 see abstract	1-3

1

Form PCT/ISA/210 (continuation of second sheet) (July 1992)

Bright House Networks - Ex. 1008, Page 1314

INTERNATIONAL SEARCH REPORT

information on patent family members

Interi nal Application No
PCT/US 97/23816

Patent document cited in search report	Publication date	Patent family member(s)	Publication date
WO 9812860 A	26-03-98	NONE	
EP 0781016 A	25-06-97	JP 9168051 A	24-06-97
		CA 2192740 A	19-06-97
WO 9714238 A	17-04-97	NONE	
WO 9638018 A	28-11-96	FI 961690 A	25-11-96
		AU 5916696 A	11-12-96
		EP 0829181 A	18-03-98
		NO 975343 A	21-01-98
WO 9620553 A	04-07-96	CA 2139081 A	24-06-96
		AU 4294996 A	19-07-96
		EP 0799543 A	08-10-97
		US 5608786 A	04-03-97
WO 9632800 A	17-10-96	US 5657378 A	12-08-97
		AU 5389596 A	30-10-96
		EP 0820675 A	28-01-98
WO 9733412 A	12-09-97	AU 2202897 A	22-09-97
US 5610910 A	11-03-97	WO 9707625 A	27-02-97
WO 9728628 A	07-08-97	AU 1851397 A	22-08-97

Bright House Networks - Ex. 1008, Page 1315

PCT WORLD INTELLECTUAL PROPERTY ORGANIZATION
International Bureau

INTERNATIONAL APPLICATION PUBLISHED UNDER THE PATENT COOPERATION TREATY (PCT)

(51) International Patent Classification 6 : H04L 12/28, 12/56 — A1

(11) International Publication Number: **WO 98/37665**

(43) International Publication Date: 27 August 1998 (27.08.98)

(21) International Application Number: PCT/US98/03630

(22) International Filing Date: 25 February 1998 (25.02.98)

(30) Priority Data:
08/810,148 25 February 1997 (25.02.97) US

(63) Related by Continuation (CON) or Continuation-in-Part (CIP) to Earlier Application
US 08/810,148 (CIP)
Filed on 2 February 1997 (02.02.97)

(71) Applicant *(for all designated States except US)*: FONEFRIEND SYSTEMS, INC. [US/US]; 3524 Rittenhouse Street, N.W., Washington, DC 20015 (US).

(72) Inventors; and
(75) Inventors/Applicants *(for US only)*: VAZIRI, Faramarz [IR/US]; 38 Roundout Harbor, Port Even, NY 12466 (US). WIMSATT, John, D. [US/US]; 3524 Rittenhouse Street, N.W., Washington, DC 20015 (US).

(74) Agent: LEDBETTER, James, E.; Watson Cole Stevens Davis, P.L.L.C., Suite 1000, 1400 K Street, N.W., Washington, DC 20005 (US).

(81) Designated States: AL, AM, AT, AU, AZ, BA, BB, BG, BR, BY, CA, CH, CN, CU, CZ, DE, DK, EE, ES, FI, GB, GE, GH, HU, IL, IS, JP, KE, KG, KP, KR, KZ, LC, LK, LR, LS, LT, LU, LV, MD, MG, MK, MN, MW, MX, NO, NZ, PL, PT, RO, RU, SD, SE, SG, SI, SK, SL, TJ, TM, TR, TT, UA, UG, US, UZ, VN, YU, ZW, ARIPO patent (GH, GM, KE, LS, MW, SD, SZ, UG, ZW), Eurasian patent (AM, AZ, BY, KG, KZ, MD, RU, TJ, TM), European patent (AT, BE, CH, DE, DK, ES, FI, FR, GB, GR, IE, IT, LU, MC, NL, PT, SE), OAPI patent (BF, BJ, CF, CG, CI, CM, GA, GN, ML, MR, NE, SN, TD, TG).

Published
With international search report.
Before the expiration of the time limit for amending the claims and to be republished in the event of the receipt of amendments.

(54) Title: INTERNET SWITCH BOX, SYSTEM AND METHOD FOR INTERNET TELEPHONY

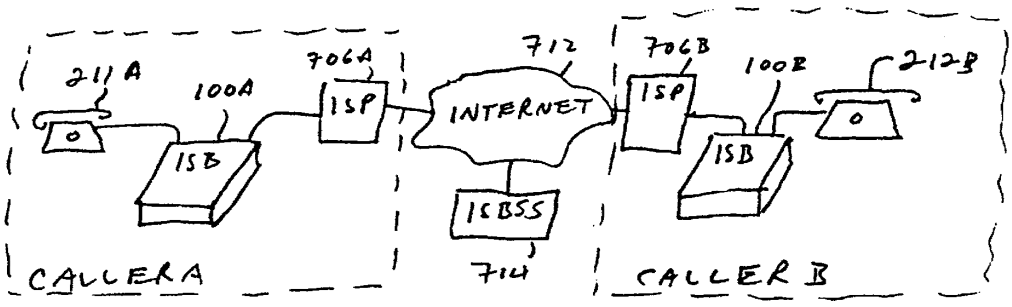

(57) Abstract

An Internet switch box (100) connects between a telephone set and a public switched telephone network (PSTN) line (212), the latter of which is used both for PSTN (702) telephone conversations and for connection to an Internet service provider (ISP) (706). The switch box (100) contains hardware and embedded software for establishing a connection to an ISP (706) and for Internet (712) telephony. When two users, each having an Internet switch box (100A, 100B) connected to the telephone set (211A, 212B), wish to have an Internet (712) telephony conversation, one calls the other over the PSTN (702). When they agree to an Internet telephony conversation, they signal their Internet switch boxes (100), by pressing either buttons (301, 303) on the switch boxes (100) or certain keys on the telephone keypads, to switch to Internet (712) telephony. The switch boxes (100) disconnect the PSTN (702) call and connect to their ISPs (706A, 706B). Once the switch boxes are on the Internet (712), they contact each other through a server (714) which supplies Internet protocol (IP) addresses of switch boxes (100), and the users continue their conversation by Internet (712) telephony. The users can also prearrange to call each other solely by Internet (712) telephony, in which case they do not need to talk to each other over the PSTN (702).

FOR THE PURPOSES OF INFORMATION ONLY

Codes used to identify States party to the PCT on the front pages of pamphlets publishing international applications under the PCT.

AL	Albania	**ES**	Spain	**LS**	Lesotho	**SI**	Slovenia
AM	Armenia	**FI**	Finland	**LT**	Lithuania	**SK**	Slovakia
AT	Austria	**FR**	France	**LU**	Luxembourg	**SN**	Senegal
AU	Australia	**GA**	Gabon	**LV**	Latvia	**SZ**	Swaziland
AZ	Azerbaijan	**GB**	United Kingdom	**MC**	Monaco	**TD**	Chad
BA	Bosnia and Herzegovina	**GE**	Georgia	**MD**	Republic of Moldova	**TG**	Togo
BB	Barbados	**GH**	Ghana	**MG**	Madagascar	**TJ**	Tajikistan
BE	Belgium	**GN**	Guinea	**MK**	The former Yugoslav Republic of Macedonia	**TM**	Turkmenistan
BF	Burkina Faso	**GR**	Greece			**TR**	Turkey
BG	Bulgaria	**HU**	Hungary	**ML**	Mali	**TT**	Trinidad and Tobago
BJ	Benin	**IE**	Ireland	**MN**	Mongolia	**UA**	Ukraine
BR	Brazil	**IL**	Israel	**MR**	Mauritania	**UG**	Uganda
BY	Belarus	**IS**	Iceland	**MW**	Malawi	**US**	United States of America
CA	Canada	**IT**	Italy	**MX**	Mexico	**UZ**	Uzbekistan
CF	Central African Republic	**JP**	Japan	**NE**	Niger	**VN**	Viet Nam
CG	Congo	**KE**	Kenya	**NL**	Netherlands	**YU**	Yugoslavia
CH	Switzerland	**KG**	Kyrgyzstan	**NO**	Norway	**ZW**	Zimbabwe
CI	Côte d'Ivoire	**KP**	Democratic People's Republic of Korea	**NZ**	New Zealand		
CM	Cameroon			**PL**	Poland		
CN	China	**KR**	Republic of Korea	**PT**	Portugal		
CU	Cuba	**KZ**	Kazakstan	**RO**	Romania		
CZ	Czech Republic	**LC**	Saint Lucia	**RU**	Russian Federation		
DE	Germany	**LI**	Liechtenstein	**SD**	Sudan		
DK	Denmark	**LK**	Sri Lanka	**SE**	Sweden		
EE	Estonia	**LR**	Liberia	**SG**	Singapore		

INTERNET SWITCH BOX, SYSTEM AND METHOD FOR INTERNET TELEPHONY

Cross-reference to Related Application

This is a continuation-in-part of U.S. patent application Serial No. 08/810,148, filed February 25, 1997, whose disclosure is hereby incorporated by reference in its entirety into the present disclosure.

Field of the Invention

The present invention relates to Internet telephony, i.e., placing telephone calls over a specific secondary network, such as the Internet, by way of a standard telephone connection using the Public Switched Telephone Network (PSTN).

Description of Related Art

The technique of using the Internet to carry on telephone communications is commonly referred to as Internet Telephony (IT) or, sometimes, Voice on the Net (VON). IT is a way to communicate over the Internet that bypasses PSTN toll connections. IT can be advantageous for individuals and businesses that need or want to communicate extensively with others outside of their local calling areas, especially to frequently called numbers.

IT is typically accomplished by what is commonly referred to as Personal Computer-Based Internet Telephony (PCIT). PCIT allows users with properly equipped personal computers to complete long distance telephone calls to one another over the Internet without incurring a toll charge. To do so, the users must have personal computers that are multimedia capable in terms of possessing a sound card, sufficient processing power, a high quality microphone, an adequate modem (preferably 14.4 or faster) and the same specialized software programs, as well as an account with an online service or Internet service provider (ISP) for connection to the Internet via SLIP (the serial-line Internet protocol) or PPP (the point-to-point protocol). Current PCIT

techniques are not compatible with shell accounts, which are accounts in which a user logs on through terminal emulation to a remote machine running Unix or the like and accesses the Internet through that remote machine in text mode by typing commands at a prompt.

Several PCIT software packages are on the market. These packages are mutually incompatible; two users wishing to make a PCIT connection must have the same software package. Popular PCIT software packages include those marketed under the names "Iphone" and "Web Phone."

The "Web Phone" software works in the following manner. The users wishing to speak to each other must both be online for the communication to take place, although they can arrange beforehand to be online at the same time.

Both users run the software, and the software packages on both computers seek each other by referring to each other's Internet protocol (IP) addresses. An IP address can be static, meaning that each user is assigned a single permanent IP address, or dynamic, meaning that a user is assigned a different IP address every time that user logs on. If the users both have static Internet protocol addresses, they can simply store each other's IP addresses beforehand. However, many users, including virtually all users of less expensive ISP's and of online services such as America Online, have dynamic IP addresses. Therefore, before the users can connect to each other, they must log onto a common server so that each one can find out the dynamic IP address which has been assigned to the other user. Either way, once the users have each other's IP addresses, the software packages can communicate with each other over TCP/IP (transfer control protocol/Internet protocol) ports 21845, 21846 and 21847.

Sound originating on one end is digitized via the microphone and sound card, compressed, and transmitted to the other end as packets over the Internet using TCP/IP, where

Bright House Networks - Ex. 1008, Page 1319

the packets are decompressed and converted back into sound via the sound card and speakers.

There are, however, disadvantages associated with the present state of IT or VON. Besides the hardware requirements and the difficulty that many users have with configuring their computers to achieve SLIP or PPP connections to their ISPs, until such time as PCIT vendors can agree on standards, the requirement that both users have the same software to communicate with each other will remain. Not only is the hardware described above expensive, but extensive knowledge of computers and the Internet is also required, making IT intimidating to a majority of the population who would otherwise like to take advantage of this capability. There are other disadvantages to PCIT. Its users need to prearrange a time to call each other because both parties must take proactive measures to connect the call and thereby converse with each other.

Internet Telephony also sometimes refers to a new service being planned whereby individuals or businesses may use or pre-subscribe to a special access number and place their long distance telephone calls by way of a long distance carrier who uses the Internet to carry the calls. This service eliminates most of the disadvantages of PCIT, but also eliminates most of the advantages, in that toll and/or usage type charges still apply.

Devices are known for allowing PCIT by letting users initiate a conversation over the PSTN and switching to IT. Such devices exchange information relating to their IP addresses during the PSTN phase of the call so that the IT phase of the call can be completed. However, in such devices, the modem may be set or initialized twice, once for the PSTN phase of the call to exchange the IP address information and once for the IT phase of the call to connect to the Internet. Setting the modems twice is time-consuming. Also, such devices cannot be used for calls which take place entirely by way of IT, since they have no way of exchanging the IP address related information to locate each other.

Bright House Networks - Ex. 1008, Page 1320

Summary of the Invention

It is an object of the invention to allow a user to make telephone calls via the Internet without a need for an expensive multimedia-capable personal computer.

It is another object of the invention to allow a user to make telephone calls via the Internet without a need to configure such a computer for a SLIP or PPP connection to the Internet.

It is a further object of the invention to allow a user to select a route for a telephone call (the Internet, the conventional PSTN, a dedicated network, etc.) and to use a single device for the call regardless of which route is selected.

It is a further object of the invention to provide a device and method for Internet telephony which are easy to use, do not require a computer and offer superb voice quality.

To these and other ends, the present invention is directed to a terminal device or Internet switch box (ISB) for connecting a first telephone set and a second telephone set over a selected one of a primary network and a secondary network, the switch box comprising: primary network connecting means for connecting the first telephone set to the primary network; secondary network connecting means for connecting the first telephone set to the secondary network and for establishing a connection over the secondary network between the first telephone set and the second telephone set; relay means for (i) connecting, when the relay means is in a first state, the first telephone set to the primary network connecting means and for (ii) connecting, when the relay means is in a second state, the first telephone set to the secondary network connecting means; and switching means for receiving a switch-over command to switch from the primary network to the secondary network and for controlling, in response to the switch-over command, (i) the relay means to disconnect the first telephone set from the primary network connecting

Bright House Networks - Ex. 1008, Page 1321

means and to connect the first telephone set to the secondary network connecting means and (ii) the secondary network connecting means to establish the connection over the secondary network between the first telephone set and the second telephone set.

A relatively inexpensive interface device, referred to as an Internet switch box (ISB), is connected to or integrated within the telephone. While the user must possess access to the Internet either directly or via an Internet Service Provider (ISP) in order to use the ISB, the user will not be subject to toll charges other than those incurred using the PSTN to establish the Internet telephone call. The user does not need to understand how a computer works or how to use any PCIT software, since the ISB can be preprogrammed to dial an ISP and to connect via SLIP or PPP. The user need only know how to dial the call using normal PSTN dialing procedures and then simply switch the call to an Internet connection, if available and desirable. Other than the user pressing a button (either on the ISB or telephone keypad) to initiate the Internet telephone call, the ISB takes care of all connection procedures (i.e., handshaking) necessary to set up and maintain the Internet telephone call. While both parties must possess an ISB in order to take advantage of the ISB's IT capabilities, only one party needs to initiate the telephone call in order to establish the Internet connection, so that prearrangement is not required.

Advantageously, the selection among networks may be among the PSTN, selected proprietary networks, or the Internet. It should be noted that the PSTN utilizes circuit switching techniques whereas, for instance, the Internet makes use of packet switching. Circuit switching was specifically designed and is best for analog voice transmissions, whereas packet switching was designed and is best for digital data transmissions. Regardless, either type of switching may be employed for voice or data. The calling party uses the PSTN to first establish the connection

Bright House Networks - Ex. 1008, Page 1322

between calling and called parties, and then the two parties decide whether or not to use their ISB's to re-establish the connection via a secondary network such as the Internet. The users will consider convenience, cost and connection quality in making this choice. If the telephone call is to another party in the same local calling area, of short duration, or one where, regardless of cost, the stability and voice quality of the connection are essential, then the users typically opt to stay on the PSTN connection and not seek to switch to the Internet. Otherwise, the potential cost savings of simply switching to an Internet connection make doing so preferable.

As indicated, an ISB may be incorporated into a telephone or be a standalone adjunct device connected between the telephone and the telephone line. Additionally, ISB's may be associated with facsimile machines, wireless telephones and multiple line telephone systems, such as key telephone and Private Branch Exchange (PBX) systems, and operate to provide multiple users of such Customer Provided Equipment (CPE) the ability to designate the secondary network handling of their toll calls. According to one embodiment, the ISB will set up a secondary network or Internet telephone call after the PSTN connection has been established and in response to a command to do so by its user(s) as described above. In an alternative embodiment, the ISB may be configured to establish a connection over a secondary network automatically unless commanded not to prior to the call being placed. In either case the called telephone can answer or simply ring before the telephone call can be switched to a secondary network or the Internet. As such, the ISB does not interfere with accepted and customary PSTN procedures in that the PSTN portion of the telephone call is billable only if there is an answer by a live person or an answering machine or voice mail service.

In order to establish a secondary network or Internet connection via the ISB, the user will first dial the PSTN telephone number of the intended call recipient. Once the called telephone is

Bright House Networks - Ex. 1008, Page 1323

answered, which is a billable PSTN telephone call of short duration, both parties initiate, via a simple key stroke, the switch to the secondary network. The two ISB's disconnect the PSTN call, and each initiates its own call to the other via the secondary network. If the secondary network is the Internet, the connection typically is by way of an Internet Service Provider (ISP) which can be reached, advantageously, by a toll-free telephone call enabling access to the user's Internet service account which, advantageously, has unlimited use or use charges in an amount much lower than the expected PSTN charges. The two ISB's possess information (i.e., addresses, passwords, etc.) necessary to re-connect the telephone call via the secondary network. Each ISB can be programmed to provide call progress tones or to play pre-recorded messages, music, etc., while the users await reconnection. If the call cannot be connected via the secondary network due to access problems at the ISP or otherwise, then each party is so informed by a recognizable audio signal such as a busy signal or a voice recording. Either or both parties can, by pressing appropriate keys, retry their connection via the Internet or reconnect the telephone call over the PSTN. This capability is somewhat analogous to the redial capability on many conventional telephones. Should two parties seek to avoid PSTN charges altogether, they may use this same capability to do so via prearrangement. In so doing, each party need only input the other party's telephone number in addition to pressing the appropriate buttons on the ISB or telephone keypad. Regardless, once the call is connected via the secondary network or the Internet, the parties terminate the call by hanging up, as with any PSTN call.

The present invention thus implements an embedded approach to IT which offers the following advantages. The use of ISB's allows low-cost, easy-to-use, embedded Internet access for telephones. Lower cost is achieved because no PC's are required. Users, many of whom would prefer not to have to configure a PC for Internet access, are offered a familiar PSTN

Bright House Networks - Ex. 1008, Page 1324

approach which can identify a called party by that party's existing telephone number. This approach also preserves the major advantage of IT, namely, the use of low-cost Internet bandwidth.

While the invention is intended primarily for use with single-line analog telephone sets, it can be adapted for use with other telephone systems, such as DID PBX (direct-in-dial private branch exchange) and Centrex service and with analog or digital mobile telephones such as cellular telephones and PCS (personal communication service) telephones. Also, while the ISB can be built to access the ISP through a dial-up connection, it can alternatively be built to access the ISP through another connection, such as an ISDN (integrated services digital network) connection or a cable modem connection.

Brief Description of the Drawings

The preferred embodiment will now be described in detail with reference to the drawings, in which:

Figure 1 is a flow chart depicting the functional organization of the ISB;

Figure 2 is a block diagram of an embodiment of the ISB;

Figure 2A shows a software architecture implemented in the hardware of Fig. 2;

Figure 2B shows an alternative design of an ISB;

Figure 3 shows a front panel view of the ISB;

Figure 4 shows a rear panel view of the ISB;

Figure 5 shows a flow chart of the steps involved in placing a call between two ISB users;

Figure 6 shows a flow chart of operations performed by one of the ISB's during the call of Figure 5;

Figures 7A-7E show the connections between one or more ISB's and other telephony

Bright House Networks - Ex. 1008, Page 1325

components during various calling operations;

Figure 8 shows a flow chart of the operational states assumed by the ISB's during a PSTN-to-Internet call;

Figure 8A shows a flow chart of the dynamic adjustment performed during the Internet phase of a telephone call;

Figure 9 shows a connection between an ISB and a help desk;

Figure 9A shows a flow chart of operation of an ISBSS, which is a server used to complete calls;

Figures 10A and 10B show a code listing for the ISBSS;

Figure 11 shows a state diagram of the ISBSS;

Figures 11A-11E show data structures exchanged between the ISBSS and an ISB;

Figure 11F shows an output of a monitoring process performed by the ISBSS;

Figure 11G shows an error log kept by the ISBSS;

Figure 12 shows a system defined by multiple users' ISB's, the PSTN, the Internet, the help desk, the ISBSS and various other servers; and

Figure 13 shows an IT standard which may be implemented with the present invention.

Detailed Description of the Preferred Embodiment

According to a preferred embodiment, the ISB is capable of performing three major tasks: (1) establishing voice telephone calls via the Internet; (2) sending/receiving voice messages via Internet based E-Mail; and (3) interfacing with Internet Audio Servers.

During the execution of each task, one of the following five modes of operation can be assumed by the ISB:

I. Programming Mode: The ISB can be programmed locally or remotely by a telephone

Bright House Networks - Ex. 1008, Page 1326

keyset or external keyboard for its desired operation.

II. PSTN Voice Mode: The ISB is transparent and does not interfere with voice communications between two parties involved.

III. PSTN Data Mode: The ISBs can exchange data via in-band signaling or otherwise.

IV. Internet Voice Mode: UDP packets are exchanged to carry voice over the Internet ("UDP" stands for "User Datagram Protocol," a protocol which allows applications to send messages to one another).

V. Internet Data Mode: TCP or UDP packets are exchanged to carry information other than voice, such as signaling or IP address resolution.

These modes of operation are realized by invoking a collection of resources in the ISB 100 which are under control of the ISB's application module 101. These resources are shown in Figure 1 and described below:

Telephone Set Controller (TSC) 102 is a module which controls all signaling activities related to a "Plain Old Telephone" (POT), i.e., on-hook, off-hook, hook-flash, pulse or tone dialing, ringing, ringing trip detection, etc.

Loop/Start (L/S) Line Controller (LLC) 103 is a module which controls all signaling related to a loop start telephone line, i.e., ring detection, line seizure, hold, loop current detection, pulse and tone dialing, etc.

Modem/Facsimile Module (MFM) 104 is a module which provides a modem and facsimile engine to transmit digital data over PSTN line. The baud rates of the modem/fax are determined by data exchange requirements.

Voice Compander (=compresser and expander) Module (VCM) 105 is a module which compresses the linearly sampled voice into low bit rate digital voice suitable for digital telephone

Bright House Networks - Ex. 1008, Page 1327

applications. The expander part of the module performs the reverse operation.

Tone Generators and Decoders (TGD) 106 is a module which produces and detects all call progress (e.g., dial, busy, special, etc.) and signaling (e.g., dual-tone multifrequency or DTMF, multifrequency or MF, etc.) tones.

Voice Players and Recorders (VPR) 107 is a module which records and plays voice prompts under the direction of the ISB.

Digital Switching Matrix (DSM) 108 is a module which enables the different modules (i.e., TSC, LCC, TGD, VPR, etc.) can be connected together via buses 111 and 112.

Signal Processing Services (SPS) 109 is a module which handles signal processing services such as echo cancellation, speech recognition, pitch adjustment, etc.

Network Connection Module (NCM) 110 is a module which handles all digital networking communication between the ISB and other external digital sources such as the ISP, another ISB, various Internet resources and servers, etc. are handled by this module.

Application Module (AM) 101 is a module which provides the logic flow required to execute the above mentioned tasks.

The following describes several of the operations of the ISB:

1. Programming the ISB: The user uses the telephone keypad and menu button 301 on front panel 302 of the ISB (Fig. 3) to enter the programming mode (local or remote). The ISB guides the user through a menu-driven procedure to program the ISB by using voice prompts, guide tones or both. The user inputs the desired information by entering a code with the telephone keypad corresponding to each character to be entered; the instruction manual for the ISB can include a table of two-digit codes for all digits, all capital letters, all small letters (thus allowing case-sensitive information to be entered with ease and accuracy), and any punctuation

Bright House Networks - Ex. 1008, Page 1328

marks to be used. The ISB can be programmed externally (remotely) as well; external programming can be used to input user-specific data and to update the ISB. Local programming is especially useful when the user changes ISPs.

Programming can also be accomplished by connecting the ISB to a computer such as an IBM-compatible PC via a serial link or another appropriate link. The programming can be done by entering ASCII commands from the PC through a standard terminal-emulation program or by software written specifically for this purpose. During manufacture, the ISB is programmed with its factory settings through a connection to a computer.

2. Telephone call: The calling party picks up the telephone (goes off-hook) and dials the telephone number of the called party. The ISB monitors and stores the digits dialed. The called telephone rings and is answered by a live person, answering machine or voice mail service. If the called telephone is answered by a live person, the two parties decide whether or not it is appropriate to switch to the Internet. The parties may initiate the switch to the Internet by pressing the appropriate code on the telephone keypad or Internet button 303 in the ISB itself. The ISBs of the calling and called parties then disconnect the PSTN connection (this step is not necessary if the ISBs have multi-line capabilities) and dial their respective ISPs so that each ISB is connected to the Internet. While each ISB connects to the Internet, the person using the ISB hears progress tones, recorded music, or the like.

Once the ISBs are connected to the Internet, they connect to the server, unless (as is rather unlikely) each party knows that the other party has a static IP address and has that static IP address on file. Each ISB sends its telephone number and IP address to the server so that the server has a current IP address corresponding to each telephone number. Each ISB communicates the other party's telephone number to the server to retrieve the other party's IP

Bright House Networks - Ex. 1008, Page 1329

address. Once each party knows the other party's IP address, the Internet telephone connection begins, and the ISBs send voice packets to each other. The ISBs can also resolve each other's IP address in other ways, such as through e-mail (POP3) servers.

Of course, two users are not precluded from arranging to call each other on the Internet at a certain time, in which case they avoid PSTN charges altogether. However, the use of the ISBs described above offers additional flexibility in that users can choose to prearrange their Internet calls or initiate them over the PSTN.

3. Sending and receiving voice mail messages: The user presses menu button 301 or otherwise issues a command to summon the menu and follows the prompts to send and receive messages. The digitized voices for such messages are sent as binary attachments to e-mail messages; one ubiquitous standard for such binary attachments is called MIME (multimedia Internet mail extensions). Both parties should have e-mail access. If the calling party does not already know the called party's e-mail address, the ISBSS or another server can correlate telephone numbers with e-mail addresses.

The ISB have the capability to dial in to check the e-mail for voice messages periodically. If a voice message is waiting, the ISB can so indicate by providing a flashing LED, by emitting a special tone when the user picks up the telephone, or the like.

4. Internet Audio Server (IAS) calls: These are calls made through the ISB to access IASs, or Internet audio servers, which are Internet servers (such as Web or FTP (file transfer protocol) servers) configured to provide audio information. The user picks up the telephone and presses the menu button 301 on the ISB. The menu system uses voice prompts to prompt the user to access different IASs. The ISB then accesses the selected IAS either by telephone or by dialing the ISP and connecting to the IAS over the Internet. The ISB can resolve the IP address

Bright House Networks - Ex. 1008, Page 1330

of an IAS either by accessing the server described above or by accessing a conventional domain-name server (DNS), which is a server for correlating IP addresses and domain names such that the DNS provides an IP address when given a domain name. Once an IAS is known, the ISB can store the IP address, since servers provided for access by the general public normally have static IP addresses.

5. ISB special server: As noted above, a server is provided to allow the users of two ISBs to resolve each other's IP addresses. Such a server is known as an ISB special server (ISBSS), and it correlates telephone numbers to IP addresses. The ISBSS can look up an IP address for an ISB which has previously accessed the server and provided information correlating its telephone number and IP address. The ISBSS does this by searching by the telephone number, or the least significant digits of the telephone number, provided by another party wishing to access that ISB. The ISBSS also uses telephone numbers to find e-mail addresses and possibly also the IP addresses of IASs. With the ISBSS, the ISBs do not have to exchange information concerning their IP addresses directly during the PSTN phase of a telephone call.

The ISBSS can also collect and report transactions, statistical data about attempts, completions, etc. by type of call request and customer, for engineering and marketing purposes. The requirements for interfacing, processing and data storage with a computer based server such as the ISBSS will be readily understood by those skilled in the present state of the art. A fuller description of the ISBSS will be set forth below.

6. Compatibility with call waiting, caller ID, and other enhanced telephone features: According to one embodiment of the ISB, call waiting must be inactive to assure Internet call connection continuity. A disable code can be programmed to de-activate this feature when Internet telephone calls are in process. It is presumed that users who are on a long distance call

Bright House Networks - Ex. 1008, Page 1331

do not want to be disturbed. Such disable codes are known in the art; for example, it is known to configure communication software to disable call waiting by dialing a code such as *70 and pausing before every call. Another embodiment of the ISB not only allows call waiting to function but also incorporate caller ID and other premium telephone services. For example, an ISB can have integrated caller ID and can even indicate whether the caller has an ISB, e.g., by searching by the telephone number through the ISB's database of completed calls.

These and other operations are implemented on hardware and software which will now be described in detail. According to a preferred embodiment, the ISB is implemented by realizing the described modules by way of an existing personal computer or by repackaging the necessary personal computer capabilities into a commercially viable design. In the latter case, the ISB need not include those hardware or software capabilities which are not relevant to the functions which the ISB is expected to perform; therefore, the hardware and software can be radically simplified from those of a personal computer. In particular, the ISB can be implemented in hardware and software compatible with MS-DOS, rather than in the considerably more complicated and expensive hardware and software associated with operating systems such as Windows 95 or Windows NT. In the alternative, a design based on a digital signal processor (DSP) can be employed. Various elements of any designed embodiment such as the modem and vocoder functions can be implemented via hardware or software equivalents. Those skilled in the art are familiar with the computer telephony modules and software libraries which can easily implement the disclosed modules. The following describes a commercially efficient approach, and Figure 2 shows a schematic illustration of this preferred embodiment.

The ISB includes PC-compatible microcontroller (microprocessor) 201, such as an Intel 80186 processor or an equivalent. Microcontroller 201 includes integrated timers, direct memory

Bright House Networks - Ex. 1008, Page 1332

access (DMA) channels, serial links and interrupt handlers and is supported by a memory system 202 including, for example, ROM, SRAM, flash memory, or EEPROM. Microcontroller 201 and memory system 202 together form the main processing unit for the ISB. Memory system 202, besides providing working memory for the operation of the ISB, also stores such code as is needed to operate the ISB. For example, memory system 202 includes code for establishing an Internet connection; such code is analogous to a Winsock dialer on IBM-compatible PCs.

An internal DC-to-DC power converter 213 provides the proper voltages to the various components within the ISB. An appropriate external AC-to-DC adaptor interfaces the ISB to the available AC power alternatives found in the U.S. and elsewhere.

The modem 202 may be implemented most advantageously via a hardware modem or modem chip which is connected to the microcontroller 201 and the Loop Start Line Controller 208 and data access arrangement (DAA) 209, both of which are described below. Modem 202 can be a Rockwell 14.4 modem or any other suitable modem, although it should preferably be capable of a speed of at least 14.4 and should also preferably be upgradeable as new modem standards emerge.

The vocoder 204 may be most advantageously implemented via hardware which is connected to the microcontroller and which has its own SRAM 214. The vocoder provides low bit rate voice compression and decompression and interfaces the Telephone Set Controller 205.

The Telephone Set Controller 205 includes a Subscriber Line Interface Circuit (SLIC) 206 and a CODEC 207 which is, advantageously, connected to the vocoder. CODEC 207 allows SLIP or PPP connection to the Internet.

Loop Start Line Controller 208 includes a Data Access Arrangement (DAA) 209 and is connected to the modem 202 and the telephone line 212.

Bright House Networks - Ex. 1008, Page 1333

A 2 FORM C relay 210 is provided, as illustrated in Figure 2, to connect the telephone 211 to either the telephone line 212 or the Telephone Set Controller 205. When telephone 211 is connected to telephone line 212, the ISB functions as a passive pass-through device. When telephone 211 is connected to telephone set controller 205, communication between telephone 211 and telephone line 212 (i.e., between telephone 211 and the outside world) passes through and is handled by the circuitry of the ISB, including telephone set controller 205, vocoder 204, microprocessor 201, modem 202 and loop start line controller 208.

Telephone 211 should preferably not be the sort of telephone which has its own power source (e.g., cordless telephone or integrated telephone and answering machine) or which manipulates its signaling (e.g., speaker phone with echo suppression technology).

Microprocessor 201 executes the software architecture shown in Fig. 2A. Software architecture 2A01 is based on a space-efficient embedded operating system such as ROM DOS 2A03, which includes application component 2A05 and maintenance component 2A07. Maintenance component 2A07 interacts with the following drivers. Telephone interface driver 2A09 allows the software to interact with telephone set 211. G.723 audio CODEC driver 2A11 interacts with maintenance component 2A07, telephone interface driver 2A09 and TCP/UDP driver 2A13. TCP/UDP driver 2A13, IP driver 2A15 and PPP driver 2A17 serve as modifiable, embedded networking software for packetizing data and allowing communication with the Internet; thus, they correspond to a Winsock driver on a conventional PC running Windows 95, 98 or NT. UART/modem driver 2A19 and telephone interface driver 2A21 allow communication with telephone line 212. ("UART" stands for "Universal Asynchronous Receiver and Transmitter" and refers to a chip used to interface a modem with the rest of the hardware of a computing device.)

Bright House Networks - Ex. 1008, Page 1334

The software can be a combination of commercially available software adapted for the ISB and proprietary software written specifically for the ISB. However, the ISB can use commercial, modified commercial or proprietary software or any combination.

As noted above, the hardware of the ISB can alternatively be implemented with a DSP chip. Such an alternative implementation is shown in Fig. 2B. As seen in this figure, ISB 2B01 includes microprocessor 2B03, which can be like microprocessor 201 of the embodiment of Fig. 2. Microprocessor 2B03 communicates via data and address buses 2B05 with two 512 kB EEPROM's 2B07 and a 512 kB RAM 2B09 which store the program code, data for the operation of the ISB (which will be described in detail below) and the like and provide working memory for the operation of the ISB. Microprocessor 2B03 also communicates via data and address buses 2B05 with modem or modem chip 2B13, which can be the same as modem or modem chip 202 of the embodiment of Fig. 2, and with DSP chip 2B11. DSP chip 2B11 performs compression and decompression and thus performs functions like those of vocoder 204 of Fig. 2. Modem 2B13 and DSP chip 2B11 communicate via telephony interface 2B15 with telephone set 211 and PSTN line 212. Microprocessor 2B03 also communicates with serial flash memory 2B17, which stores device data, server data and the like, and with front panel 2B19, which has LEDs (to be described in detail below with reference to Fig. 3) for communicating the status of the ISB to the user.

The ISB, whether constructed according to Fig. 2 or Fig. 2B, is packaged in an enclosure measuring approximately 7 inches by 7.4 inches by 1.4 inches and having slots sufficient for ventilation. A fan may also be provided if needed. The components shown in Figs. 2 and 2B are mounted on a printed circuit board.

The hardware and software used in the ISB can be analogized in the following manner to

Bright House Networks - Ex. 1008, Page 1335

the hardware and software of a known PC used for IT:

Function	Known PC	ISB
Digitize voice	Sound card	CODEC
Compress data	Compression algorithm executed on CPU	Vocoder or DSP chip
Packetize data	Winsock	portable networking software
ISP access	modem	modem chip
operating system	Windows 95, 98 or NT	ROM DOS
CPU	Pentium ≥ 133 MHz	Intel 80186
user interface	monitor and keyboard	telephone keypad, earpiece

Figure 3 shows a front or top view of an ISB. Front or top panel 302 may include a logo 305. Status indicator LEDs 304, 306, 307 and 311 may be provided. Three of these LEDs may be used to indicate whether the power is on or off, the status of an Internet call attempt and whether any messages are waiting. The fourth can be used in various ways, such as to indicate whether the menu feature is in use or whether an upgrade to the ISB software is available (in which case the software can be upgraded in a manner to be described below). Of course, other configurations of LEDs can be used, as can other interfaces such as an alphanumeric LCD display.

Buttons 301 and 303 may be used as already described. As an alternative to the buttons, the ISB can be configured to listen to the connection from telephone 211 to detect an off-hook state of telephone 211 and to monitor the digits dialed. If the first digit dialed after the telephone is picked up is a pound sign ("#"), the ISB knows that the user wants to access the ISB's menu system. The ISB generates a voice prompt to prompt the user to select one of the following options by way of the keypad on telephone 211:

Bright House Networks - Ex. 1008, Page 1336

Digit	Action
1	Reconnect or retry a call via the Internet
2	Make a new call via the Internet
3	Listen to voice messages
4	Send a voice message
5	Make an Internet test call (to test both the operation of the ISB and the ISP access)
6	Program the ISB
7	Upgrade the ISB
8	Make an off-net call
9, 0	Reserved for future use

If the menu system is accessed in this manner, the menu button is unnecessary. Also, because making an Internet call is a menu option, the Internet button is also unnecessary. Thus, the hardware and user interface of the ISB are simplified, and the ISB has fewer mechanically actuable components to break. Once a user becomes familiar with the menu system, he need not wait for the voice prompt, but instead can simply pick up telephone 211 and dial # and an appropriate digit to perform the function desired. Also, to cancel any operation, the user can simply hang up.

To produce the voice prompts, the ISB can store sound clips in an appropriate format in memory system 202 and play them to the user through telephone 211. For example, one such sound clip can be a recording of a voice saying, "To reconnect or retry your telephone call on the Internet, press 1." Just as conventional software can be supplied in different language versions, the ISB can be supplied in different language versions with different stored sound clips.

To cancel or start over, the user hangs up. If the ISB locks up, it can be reset by unplugging and reconnecting the power supply. Alternatively, the ISB can be equipped with a

Bright House Networks - Ex. 1008, Page 1337

reset button like those on known PCs.

Fig. 4 shows the back or bottom view of an ISB. Back or bottom panel 402 can include telephone jack 404 for connection to telephone 211, telephone jack 406 for connection to telephone line 212, optional port (serial, parallel, universal serial bus (USB), etc.) 408 for connection to another device such as a PC, and power jack 410. An AC-to-DC power adapter can be plugged in to power jack 410; the cumulative effect of the AC-to-DC power adapter and the DC-to-DC power converter is to supply a +12-volt DC supply to the circuitry of the ISB. Alternatively, the ISB can contain all of the power conversion circuitry internally, in which case back or bottom panel 402 can include a power cord to be plugged directly into a wall outlet. Also, if the ISB is intended for use with a connection other than to the analog PSTN, such as a connection to an ISDN line or to a cable modem, jack 406 can be modified accordingly. Optional port 408 can be used for any operation involving an exchange of data between the ISB and some other device, such as programming and testing the ISB at the factory and for attachment to some peripheral such as a digital camera for videophone service or a caller ID unit.

It will be readily apparent from Fig. 4 and the description thereof set forth above that a user can easily install the ISB. The user simply plugs telephone 211 into jack 404, a cord from telephone line 211 into jack 406 and a power adapter into power jack 410 to supply power from a wall outlet. Once the ISB receives power, it undergoes a POST (power-on self test) routine, such as that performed by a conventional PC. During the POST routine, all LED's light up for a predetermined period of time, such as seven seconds, to inform the user that the ISB is working correctly and is in the POST routine. The ISB can also be configured to give an error beep or an error indication through the LEDs if the POST routine fails, as is also conventional in PCs. Once the POST routine is completed, the ISB enters standby mode, in which it monitors signals from

Bright House Networks - Ex. 1008, Page 1338

telephone 211 to detect when the telephone is picked up and which digits, if any, are dialed.

The ISB includes a housing that can be desk- or wall-mounted. A premises wiring pattern and the number of telephones sharing the same telephone line will dictate the ISB's most advantageous installation.

Any or all components of the ISB which rely on code for their operation can be made software-upgradeable. For example, the modem can be software-upgradeable as modem technology advances and as standards such as the recently announced 56K standard are implemented, and the portions of the memory system containing code for the operation of the microcontroller can be software-upgradeable to allow for the H.323 Internet telephony standard. When the user issues a command to upgrade the software (e.g., by dialing # to access the menu and then by dialing 7), the ISB connects via the user's ISP and the Internet to an upgrade server to download and install the latest version of the ISB software, an operation which typically takes four to six minutes. The previous version of the software can be stored to allow the upgrade to be undone locally with no need for access to the upgrade server; to undo the upgrade, the user dials "*0#". For example, in a 512k EEPROM, 192 kB can be used for DOS and the BIOS (basic input-output system, a set of routines which allow a microprocessor to communicate with other hardware), 384 kB for the current version of the application software, 192 kB for a scratch buffer, and 384 kB for the previous version of the application software. At the factory, the ISB is provided with two copies of the same version of the software; one of these copies is overwritten in the first upgrade, while the other is available to undo the first upgrade. Some upgrades may require assistance from the help desk (to be described below), such as those allowing new extra-cost features.

Each ISB stores information regarding that ISB. Such information can include all

Bright House Networks - Ex. 1008, Page 1339

information necessary for connecting to the Internet (e.g., telephone number, user I.D. and password for logging onto the ISP). The information can also include a record of other ISBs with which the ISB has interfaced, including data for each other ISB such as the telephone number and the static IP address if any. The oldest and least used entries can be purged periodically.

More specifically, the ISB stores device, server, billing, and owner information and a friends directory. The device information is typically programmed into the ISB at the factory and includes the serial number, the manufacturing date, the hardware version, the software version, and the feature key, which identifies those features which the ISB implements. The server information includes the IP addresses for the various servers which the ISB needs to access, such as the primary and backup ISBSSs. The owner information includes the telephone number, the ISP access telephone number, any scripting required to log onto the ISP, logon name and password, the domain names or IP addresses for the SMTP and POP servers for e-mail, the e-mail address, and the e-mail password. The SMTP server implements the simple mail transfer protocol (SMTP) for sending e-mail, while the POP server implements the post office protocol (POP) for receiving e-mail. Many ISPs use the same server for both protocols. Other mail protocols exist and can be used instead. The server and owner information can be programmed locally by the user or over an Internet connection by an agent at a help desk, which is described in detail below. The friends directory is maintained automatically and in run-time and has a data structure like that shown in the following table:

Record #	Serial #	Telephone #	E-mail address	Counter
1	100011	202-555-0102	hisname@someserver.com	25
2	100021	703-555-0103	hername@anotherserver.edu	11
***	***	***	***	***

Bright House Networks - Ex. 1008, Page 1340

99	***	***	***	***

The counter is increased by one for each conversation with a particular person. When the number of entries to be stored in the friends directory exceeds the number of allowable entries, the entry with the lowest counter can be erased. Alternatively, the time and date of the last conversation can be stored, and the entry whose last conversation has the earliest time and date can be erased.

The steps carried out by both parties in placing an IT call using two ISBs are shown in the flow chart of Fig. 5. The calling party calls the called party via the PSTN in step 502, and the called party answers in step 504. In step 506, the parties agree to switch to an IT call, and in steps 508 and 510, each party's ISB disconnects (hangs up on the PSTN connection) and connects to that party's ISP. In steps 512 and 514, each party's ISB sends the calling and called telephone numbers and that ISB's IP address to the ISBSS. In step 516, each party gets the other party's IP address from the ISBSS, and in step 518, the parties talk via IT. The call is ended in step 520, and the parties hang up in steps 522 and 524.

During the call shown in Fig. 5, each party's ISB operates as shown in Fig. 6. In step 602, the ISB acts as a passive conduit for passing the call from the telephone to the PSTN. In step 604, the user presses the button to switch to an IT call. In step 606, the ISB hangs up on the PSTN call, and in step 608, the ISB calls the user's ISP and logs on. In step 610, the ISB contacts the ISBSS and sends the calling and called telephone numbers and that ISB's IP address. In step 612, the ISBSS sends the ISB the IP address of the other party's ISB, and the ISBs open an IT connection in step 614. In step 616, the user hangs up the telephone, and in step 618, the ISB logs off the ISP and hangs up from the telephone connection to the ISP.

Bright House Networks - Ex. 1008, Page 1341

A technique called "double packets" can be implemented to improve voice quality. In this technique, every packet is sent twice. Thus, if packets are dropped or sent out of sequence, voice quality will most likely not suffer. Packet dropping and out-of-sequence packet transmission are usually not a problem when the users' ISPs communicate over a common backbone or over backbones which have a peering arrangement (i.e., freely transmit packets over each other's facilities). However, if the two ISPs communicate over an NAP (network access point), packet dropping and transmission out of sequence are problems, which double packet transmission corrects.

There is a special kind of call known as a self-test call. When the user dials #5, the ISB initiates a call to a call completions server via the user's ISP. If the call is completed correctly, the user hears a recording from the call completions server to that effect. Otherwise, the user knows that there may be a problem with the ISB.

To implement the functionality noted above, the ISB can perform any of several calling operations: passive operation, establishing a connection to the ISP, PTIC (PSTN-to-Internet calling), MMIC (meet-me Internet calling), checking messages, sending messages, etc. These calling operations will now be explained with reference to Figs. 7A-7E and 8.

Passive operation will be explained with reference to Fig. 7A, which shows ISB 100 connected between telephone 211 and telephone line 212. In this operation, the ISB monitors the off-hook status of the telephone and the dialed digits via the connection to the telephone. Via the connection to the telephone line, the ISB monitors ring signals (incoming calls). If the first dialed digit is the pound sign ("#"), the ISB allows the user to control it via the menu system. Because IT is invoked through the menu system (and more specifically by dialing "#1"), IT is not invoked unless the first dialed digit is a pound sign. If more than six digits are called, the ISB

Bright House Networks - Ex. 1008, Page 1342

operates as a PTIC caller, to be explained below, while if a ring signal is received from the telephone line, the ISB operates as a PTIC called party, to be explained below. Once the telephone is placed on-hook, all operations of the ISB are reset except the mode and the digit buffer.

Connection to the ISP will now be explained with reference to Fig. 7B. The modem is initialized, and telephone line 212 is monitored for a dial tone. ISB 100 dials the ISP access number to connect via PSTN 702 to modem rack 704 of the ISP. The modem of the ISB and a modem reached in modem rack 704 negotiate the baud rate and the protocol, whereupon ISB 100 is connected to the facilities of ISP 706. The ISB and the ISP perform any authentication procedure required, and the ISB selects "PPP" from the ISP's logon menu, if any. The ISB and the ISP then start communication by PPP, and PAP (the password authentication protocol) is carried out if no authentication has been performed before. The ISB is then connected by TCP to the ISP and thus via line 708, such as a T1 or T3 line or the like, to Internet backbone 710. If the call to the ISP results in a busy signal, the user can simply wait and call again. Alternatively, the ISB can be configured to store and dial multiple access numbers for one or more ISPs.

In case a user's ISP requires a special logon procedure, the ISB can have a scripting facility. This facility allows the ISB to store a logon script and to play the script to satisfy the ISP's logon requirements. The scripting language can be the same as that used for dial-up networking in Microsoft Windows 95, which is known in the art and will therefore not be explained here.

The script can be supplied to the ISB in different ways. For example, the user can compose the script on a PC and transfer the script to the ISB over a serial connection, or the agent at the help desk (to be explained in detail below) can remotely program the script into the

Bright House Networks - Ex. 1008, Page 1343

ISB. Alternatively, the ISB can store a boilerplate script with various components which can be enabled or disabled remotely by the agent. Still another way of programming the script into the ISB is to log on manually, while the ISB is connected to a PC over a serial connection, and to issue a command to automate the logon, as certain terminal emulation programs do. In any event, it should be possible to allocate 1,024 bytes in memory to store any script.

The operation of making a PTIC call will now be explained with reference to the diagram of Fig. 7C and the flow chart of Fig. 8. In Fig. 8, operational steps or states occurring at the same time are indicated by the same reference numeral, except suffixed by A (caller A's state), B (caller B's state) or C (user actions or common states).

Caller A uses telephone 211A, ISB 100A and ISP 706A, while caller B uses telephone 211B, ISB 100B and ISP 706B. Once the PTIC call is completed, they communicate over Internet 712, generally after communication over the Internet with ISBSS 714.

At the time at which user A dials user B in step 802C, user A's ISB is passive and off hook (step 802A), while user B's ISB is passive (step 802B). As user A dials, his ISB records the digits dialed in the digit buffer in step 804A and enters "PTIC caller" mode in step 806A. Then, in step 808A, user A's ISB becomes "passive," i.e., acts as a passive pass-through between user A's telephone set and the PSTN. In step 808C, user B's telephone rings, and in step 808B, user B's ISB goes into the "PTIC called" mode. User A talks to user B in step 810C, and once they agree to an IT call, they both hang up in step 812C. During these operations, their ISBs are "passive" (steps 810A, 810B, 812A, 812B). They both pick up their telephones and dial # in step 814C, whereupon their ISBs go into menu mode in steps 814A and 814B. They both dial 1 in step 816C to initiate ISP connections in steps 816A and 816B. While they both monitor (listen for the ring-back tone) in step 818C, their ISBs remain connected to their ISPs in steps 818A and

Bright House Networks - Ex. 1008, Page 1344

818B. The ISBs connect to the ISBSS in steps 820A and 820B, and the users hear ring-back tones in step 820C. The ISB data are exchanged in steps 822A and 822B, and the users hear a confirmation tone in step 822C. While the users continue their conversation in step 824C, the ISBs undergo dynamic adjustment in steps 824A and 824B. If either user's ISP drops that user's connection, that user can simply dial #1 again to be reconnected to the ISP and thus to the other user.

Dynamic adjustment will now be described with reference to Fig. 8A. Dynamic adjustment starts in step 8A02. In step 8A04, the first hundred packets (about one-third of a second) are monitored to determine transmission quality. More specifically, the baud rate and the percentage of dropped packets are measured. In response to these measurements, it is determined in step 8A06 whether one or more of the following need to be adjusted to maximize transmission within the bandwidth provided by the baud rate: the degree of compression (e.g., 6.3, 5.3, 4.8 or 4.1 kB/sec), the packetization (number of frames per packet, from one through five, which is also a measure of delay) and whether double packet transmission is turned on or off. For example, if the baud rate is 14.4 kilobaud and the percentage of dropped packets is below 10%, the ISBs may be adjusted to 6.3 kB/sec, two frames per packet and no double packets. At the same baud rate and a percentage of dropped packets of 10% or more, the ISBs may be adjusted to 4.1 kB/sec, five frames per packet and double packets. If the connection rate is greater than 16 kB and the rate of lost packets is 10% or less, the ISBs are adjusted to 6.3 kB/sec compression, one frame and no double packets; at the same connection rate and a higher rate of lost packets, the number of frames is increased, and double packets are used. The ISBs may implement this dynamic adjustment through a look-up table in the software; i.e., every combination of the baud rate and the percentage of dropped packets will correspond to a

Bright House Networks - Ex. 1008, Page 1345

previously calculated and stored set of settings. For example, the look-up table is consulted in step 8A08, and the adjustment is made in step 8A10. Alternatively, calculation of the settings may be done on the fly. Once the adjustment is made, or if no adjustment is required, the dynamic adjustment ends in step 8A12. The ISB can be configured to abort the connection or any operation if the baud rate is less than 14.4 kB.

The hardware shown in Fig. 2 or 2B can be used to implement the dynamic adjustment of Fig. 8A. For example, the modem can detect the baud rate in a known manner, while the look-up table can be stored in whatever memory is provided (RAM, EEPROM, etc.), and the microprocessor can perform the remaining operations.

The ISB can be configured to give the following error messages, which can be used by either a user or a technical support person to determine why a call has not been completed normally:

Error code	Problem
0	No dial tone
1	ISP busy
2	ISP did not answer
3	Logon failed, no logon prompt
4	Logon failed, no password prompt
5	Insufficient baud rate
6	PPP authentication failed
7	PPP failed
8	PPP timed out
9	Server did not connect
10	Server did not respond
11	Server rejected transaction

Bright House Networks - Ex. 1008, Page 1346

12	Reception terminated
13	Transmission terminated
14	Number not programmed
Error codes 20-24 refer to sending a voice mail message, to be described below.	
20	DNS did not answer
21	SMTP address wrong
22	SMTP user ID wrong
23	SMTP rejected message
24	SMTP disconnected
Error codes 30-34 refer to receiving a voice mail message, to be described below.	
30	DNS does not answer
31	POP address wrong
32	POP user ID/password wrong
33	POP stopped sending
34	POP disconnected
Error codes 40-42 refer to user programming of the ISB through the telephone keypad.	
40	Character not defined.
41	Character entered is not permissible where entered.
42	Too many characters.

The error codes can be given to the user in the form of voice prompts. For example, if there is no dial tone, the ISB can play a first sound clip of a voice saying, "I'm sorry, but there is a problem with your Internet access; please try again. Error code ..." and a second sound clip of a voice saying, "zero." The user can consult the manual to find the significance of error code 0. In the case of errors which require a call to technical support, the user can make a note of the error code.

Variations on the PTIC call avoid incurring PSTN charges at all. Such variations include

Bright House Networks - Ex. 1008, Page 1347

a previously agreed-upon signal that a particular person is calling, such as letting the telephone ring twice and then hanging up, and letting the telephone ring just long enough for caller ID information to be sent and then hanging up. The users then call each other back over the Internet as for a meet-me Internet call, which will now be described.

The MMIC, or meet-me Internet call, is a simplified version of the PTIC. In the MMIC, the users have previously agreed to call each other at a certain time, so no PSTN handshaking is required.

In the MMIC, both users dial #2 to access MMIC operation in their ISBs via the menu. User A enters user B's number, which user A's ISB verifies in its directory, and user A's ISB enters MMIC-caller mode. User B enters user A's number, which user B's ISB verifies in its directory, and user B's ISB enters MMIC-called-party mode. The rest of the conversation proceeds as for a PTIC call, i.e., steps 814A-C to 824A-C in Fig. 8.

Once two users have already called each other using the ISBs or otherwise added each other to their friends databases, MMIC can be used with a speed-dialing technique in which a user dials the last six digits of the other user's telephone number followed by #, regardless of where in the world the other user is, thereby avoiding long and confusing digit sequences for conventional international dialing. The ISB then matches the dialed last six digits with the friends data stored in the ISB to identify the other ISB which is to be called.

The last six digits can be used for a unique identification of up to a million other ISBs. While it is possible that a user's friends database will contain two entries having the same last six digits, this possibility is remote. Even if such a situation does arise, the ISB can be configured to prompt the user to dial more digits to identify the called party uniquely.

Checking and sending messages will now be explained with reference to Figs. 7D and 7E.

Bright House Networks - Ex. 1008, Page 1348

To check messages, the user dials #3 to enter message checking through the menu. The ISB connects to the ISP and then connects through ISP 706 and Internet 712 to POP server 716. Once this last connection is achieved, the ISB downloads and plays the first message. The user can then dial 1 to repeat, 2 to go to the next message or 3 to erase a message, much as he would with an answering machine. To send a message, the user dials #4, whereupon the ISB connects to the ISP and then connects through ISP 706 and Internet 712 to SMTP server 718 (the function of the SMTP server having been described above). The user can then record a message and then send it via the SMTP server to the recipient's e-mail address. The ISB can be configured to impose a time limit on outgoing messages (e.g., 60 seconds). The ISB can also be configured to poll the ISP periodically (e.g., four times a day or some other interval which is either set in the factory or programmed by the user) to check for message and to give an indication to the user via an LED or the like when messages are waiting.

The ISB can also be configured to poll the ISP periodically (e.g., four times a day or some other interval which is either set in the factory or programmed by the user), whenever a call is completed over IP, or both to check for message and to give an indication to the user via an LED or the like when messages are waiting. In one configuration, polling takes place only when all three of the following conditions are satisfied: (1) the polling period set in the ISB has expired, (2) the telephone has not been in use in the last two minutes and (3) no ring signal has been received in the last two minutes. Of course, the ISB can be equipped with an internal clock, such as those used in conventional IBM-compatible PCs, to allow periodic polling.

Each voice mail message is stored on the recipient's POP server in the form of an e-mail message with the sender's e-mail address listed in the "From:" field, a standard subject such as "ISB voice mail message" and a MIME attachment of the voice mail message in an appropriate

Bright House Networks - Ex. 1008, Page 1349

sound file format. If the recipient checks his e-mail on the POP server with a conventional e-mail program such as Eudora, he will see such message interspersed among conventional e-mail messages. The ISB can distinguish the voice mail messages from the conventional e-mail messages by the subject.

The ISBSS will now be described in detail. The functionality described for the ISBSS can be implemented on a Sun Microsystems workstation running Solaris 2.6 or on any other sufficiently powerful computing device running an appropriate operating system. The server program executed by the ISBSS can be written in C++ or in any other suitable language. The primary purpose of the ISBSS, but not the exclusive function, is to provide connection information for two ISBs to engage in an IT call, since it is contemplated that the ISBs will not exchange information during the PSTN portion of the call. In addition, the ISBSS documents each completed call and each request for any other service, such as voice messaging and software upgrade requests, requested from ISBs and supported by the vendor of the ISBs.

The ISBSS is an iterative server. The server functions can be implemented in a single process and do not require threads. Each IT call involves two connections to the ISBSS, one from each of the ISBs. Each connection is kept open at most 200 msec after the three-way handshake is complete. The ISBSS software makes no blocking calls to any kernel function unless the ISBSS software is completely idle. In any connection to the ISBSS, there is one datagram sent in each direction.

The ISBSS provides service to the users of the ISBs by facilitating an exchange of IP addresses between two ISBs whose users want to communicate with each other. It does so by accepting a TCP connection request from each client, matching corresponding connection requests and sending the IP address of one of the ISBs to the other ISB. Otherwise, the ISBs

Bright House Networks - Ex. 1008, Page 1350

might have to communicate their IP addresses to each other during the PSTN phase of the call. Such a procedure would require the modems of the ISBs to be set twice, once for the PSTN phase of the call and once for the IT phase of the call, and would render the MMIC call impossible. The use of the ISBSS allows the ISBs to set their modems only once, for the IT phase of the call, and makes the MMIC call possible.

The operation of the ISBSS will be described with reference to the flow chart of Fig. 9A. In steps 9A02 and 9A04, each ISB sends the ISBSS a connection request, which is a data string including the following: that party's serial number, the other party's serial number, that party's telephone number, the other party's telephone number, that party's IP address, version number and the like. For a PTIC, the calling party's telephone number is not required. The ISBSS searches for a match between the ISB and a waiting list of ISB's. If there is no match, as in step 9A06 (where caller A's request has been received first), the ISB is appended to the waiting list or queue in step 9A08 and is instructed by the ISBSS to expect a call from another ISB. If there is a match, as in step 9A10 (where caller B's request has been received second), the ISB matches the requests in step 9A12 to find the IP address of the other party's ISB in step 9A14. In step 9A16, the ISBSS forwards caller A's IP address to caller B's ISB, and in step 9A18, caller B's ISB attempts to contact caller A's ISB using the thus obtained IP address, whereupon the ISBSS has no more involvement in the call. Thus, when two parties want to call each other, the first received connection request is queued, and the second received connection request is answered with the IP address of the first received request.

By holding connection requests in a data structure in this manner, the ISBSS can avoid holding open a TCP connection to any particular ISB for more than a few microseconds, thus reducing load on the ISBSS. In fact, the ISBSS can break the TCP connection immediately upon

Bright House Networks - Ex. 1008, Page 1351

receiving the connection request.

The ISBSS can also send commands to an ISB while processing a connection request. Such instructions can, for example, instruct the ISB to modify the friends data or other data stored locally in the ISB.

As the number of ISBs in use increases, more ISBSSs can be added. Multiple ISBSSs can coordinate their services; for example, an ISBSS can send an instruction to an ISB if the connection request should be made to another ISBSS.

The ISBSS stores telephone numbers in BCD (binary coded decimal) notation with the least significant digit of the telephone number stored in the most significant nibble (four bits) of the first byte (8 bits) of the telephone number string. With this approach, the ISBSS can allow the possibility of six-digit dialing to any ISB in the world. The code to implement this feature is shown in Figs. 10A and 10B.

A state diagram of the ISBSS is shown in Fig. 11. The basic design of the ISBSS software is that of a finite state machine. The states in the machine are prioritized such that if conditions allow the ISBSS to enter more than one state simultaneously, the higher priority state is entered first. After completing work to be done in any given state, the machine always returns to the "idle" state. The states are listed below, with a priority number of each state; a higher number indicates a higher priority.

Idle (0): The default state, in which the ISBSS does housekeeping on its internal data structures while waiting for requests for service which would send it into some other state.

ISB Connection Request (4): The ISBSS enters this state after completion of a three-way handshake. The ISBSS accepts all pending connection requests at this time.

ISB Connection Read (5): The ISBSS enters this state when a particular connection has

Bright House Networks - Ex. 1008, Page 1352

data ready to be read by the ISBSS. The data are read, verified and processed. The need to write the given connection is announced.

ISB Connection Write (6): The ISBSS enters this state only when a particular connection is ready to write the single datagram which the ISBSS writes to each connection. The write takes place, and the disconnect timer is set to expire in a predetermined time, such as 200 msec.

ISB Connection Disconnect (7): The ISBSS enters this state only when the disconnect timer expires for a particular connection. The ISBSS aborts the connection and frees up any space used to maintain the connection.

Telnet Connection Request (1): In addition to serving ISB requests, the ISBSS has a Telnet-like interface for issuing commands to the ISBSS. The ISBSS enters this state only when the listening service indicates that a request for connection has been completed. Only one such Telnet connection is permissible at a time. Each new request results in a dropping of the previous request. The commands include -A to set a parameter (such as the connection list time out in seconds and the billing file size in records, with the syntax being -A parametername newvalue), -B to dump the billing file, -C list to list the commands currently available, -C set (actual command) to send that command to all connection requests, -H for help, -L for a parameter list, -M n to monitor for n minutes if $n > 0$ or to turn off monitoring if $n = 0$, -Q (password) to quit, -T on or -T off to turn testing on or off, and -V (serial number) (status) to add the given serial number to the list of invalid serial number if (status) > 0 or to remove the given serial number from the list of invalid serial numbers if (status) = 0.

Telnet Connection Read (2): The ISBSS enters this state only if a command has been received on the Telnet connection and is ready to be read.

Telnet Connection Write (3): Everything which needs to be sent to the Telnet connection

Bright House Networks - Ex. 1008, Page 1353

is buffered asynchronously in a message list. The ISBSS enters this state and sends a single message if the message list is not empty.

In a connection with an ISB, the ISBSS receives a connection data structure and sends a response data structure. The connection data structure is shown in Fig. 11A, wherein the tx_data array has a structure shown in Fig. 11B and the tx_BillingData structure is shown in Fig. 11C. The response data structure is sent to every connecting ISB unless the incoming datagram is incorrect and has a structure shown in Fig. 11D, wherein the tx_data array has a structure shown in Fig. 11E.

The ISBSS is able to monitor its own behavior over a specified range of any number of minutes. The number of minutes is specified by a Telnet command described above. The output of the monitoring process is shown in an illustrative example in Fig. 11F. The data shown in Fig. 11F show the number of connection requests and the manner in which they were processed.

The ISBSS is also able to maintain a log of any errors or suspect situations which arise in running the server program. A sample log file is shown in Fig. 11G.

While it is contemplated that the ISBSS will be a public server accessible to all ISB users, it is also possible that an ISBSS will be supplied, either as a workstation with the software installed or as software for installation on a separately supplied workstation, to an organization which wishes to maintain its own dedicated ISBSS to supply connection information to ISBs within that organization. The ISBs can be programmed to use this dedicated ISBSS for calls within the organization or a public ISBSS for other calls, which are called off-net calls and initiated by dialing #8. Off-net calls can also be made by users of the public ISBSS to call one another via a backup ISBSS when their usual ISBSS is down and automatic reroute routines fail.

MMIC calls are treated similarly to PTIC calls. In MMIC calls, it does not matter which

Bright House Networks - Ex. 1008, Page 1354

ISB is the calling ISB and which is the called ISB, so that the ISBSS can assign these roles arbitrarily. In an MMIC call, the users may not coordinate the time of their call properly, in which case the calling party's request remains in the queue in the ISBSS. Either the ISB or the ISBSS can be configured to wait a certain period of time and request via a voice prompt that the user try the call again later.

In sending voice mail, the ISBSS has no involvement beyond sending a "Go ahead and send your voice mail" message, whereupon the ISBSS disconnects. In the Internet test call, the ISBSS disconnects after sending a "test complete" message.

The ISBSS can be used to program the ISB automatically as needed. The ISBSS uses the same commands which would be used to program the ISB from a PC over a serial connection. The ISBSS programs server information, e.g., the ISBSS's IP address and the feature key.

Another use of the ISBSS is to notify a customer that an upgrade is available. Whenever the ISB contacts the ISBSS, the ISBSS can supply the current software version number, which is compared with the version number of the software in the ISB. If the current version number is higher, an LED lights up on the ISB to inform the customer of the availability of the upgrade. The ISBSS supplies the ISB with the IP address of the upgrade server from which the upgrade is available and then disconnects.

In the programming and upgrade notification operations just described, the ISBSS can send the following commands to the ISB:

"Turn on the 'upgrade available' LED."

"Use the accompanying IP address as the new address for the main ISBSS."

"Use the accompanying IP address as the new address for the backup ISBSS."

The ISBSS can also reject a connection request, for example, if a caller's bill is

Bright House Networks - Ex. 1008, Page 1355

sufficiently overdue, if the serial number or telephone number in the connection request is invalid, or if the ISBSS lacks memory or process time. When an ISB's attempt to contact the ISBSS fails three times, the ISB assumes that the ISBSS is not functional and tries to connect to a secondary ISBSS.

Each connection to the ISBSS is accompanied by data describing the service most recently completed by the connecting ISB (usually about the most recently connected telephone call before the current call request). Such data are written to a log file for future processing.

Other servers besides the ISBSS can be used. For example, a backup ISBSS can be added and can become active when the main ISBSS fails or passes control. Also, auxiliary servers such as an upgrade server, an inquiry server, an H.323 server, a commercial server and the like can be used.

A particular server which can be used with the ISB system is called a billing server. The billing server maintains information regarding each completed IT call for billing purposes. The ISBSS can supply this information to the billing server. The billing record for each call includes the caller telephone number, the caller serial number, the called telephone number, the called serial number, the start time and date, the call duration and the quality of the connection. To determine the quality of the connection, the billing server or another server can maintain a statistical record, either globally or for each call. The statistical record can include such information as the percentage of lost packets, the percentage of late packets, the percentage of packets out of sequence, the percentage of discarded transmission packets, the percentage of discarded reception packets, and, for each of the parties to the call, the baud rate, the compression rate, and the frames.

The billing information is collected for all different transactions of an ISB. To make this

Bright House Networks - Ex. 1008, Page 1356

process more efficient, the billing information about a transaction is passed to the billing sever at the beginning of the next transaction.

The ISB generates a billing record as follows. When the ISB contacts the ISBSS for a transaction, the ISB receives the current time from the ISBSS and produces a partial billing record which includes the start time and the telephone number of the other party (the latter field being left blank when it is inapplicable, e.g., when checking messages). At the end of the transaction, the ISB adds the duration to the partial billing record to produce a complete billing record, which is provided to the billing server at the beginning of the next transaction.

A feature which a company selling ISBs can provide to enhance the functionality of the ISBs is called the "help desk." Through the help desk, customer service agents can assist customers by remotely programming their ISBs, answering questions about the service, upgrade the software in the ISBs, etc.

Fig. 9 shows a connection between a customer's location 900C and an agent's position 900HD at the help desk. The help desk has one or more call center positions 900HD, each equipped with a standard telephone 211HD, a computer or data terminal 908 and a specially equipped ISB 100HD connected to computer or data terminal 908 via a serial port or other connection such as serial port 408 of Fig. 4. The customer connects to the help desk via PSTN 902, customer's ISP 904C, Internet 906 and help desk's ISP 904HD. The agent can use ISB 100HD to access, program, upgrade and test customer's ISB 100C. The agent can change the data stored in ISB 100C (for example, the device data, server data and owner data). The help desk does not have to change the data maintained automatically by ISB 100C or by other servers (e.g., friends data, billing data and service records). Also, the agent and the customer can talk via telephones 211C and 211HD, either in voice over data via the Internet or in voice-only mode via

Bright House Networks - Ex. 1008, Page 1357

the Internet or the PSTN, so that the agent can answer the customer's questions. The user can initiate a voice-over-data conversation by dialing *0#.

Programming of the ISB from the help desk takes place in the following manner. The customer and the agent engage in a conversation, either by IT or by the PSTN. If the agent decides that the customer's ISB 100C is to be remotely programmed from the help desk, the agent instructs the customer to dial *0# into telephone 211C. The agent verifies that the customer's ISB 100C has accepted this code to go into voice-over-data mode and enters a similar command to set his own ISB 100HD to voice-over-data mode. The ISBs 100C and 100HD perform a modem handshaking and then start a PPP link between them. Once the link is established, the bandwidth is shared between voice and data, and the agent and the customer can resume their conversation while the agent accesses, examines and programs the customer's ISB 100C.

The agent's computer or data terminal 908 has software to allow the agent to access, examine and program the customer's ISB 100C in this manner. The software displays a window into which the agent enters his own identifying information, device data such as the serial number, feature key and hardware and software versions, server IP addresses, and the user data. The window also has buttons to allow the agent to read the data stored in the customer's ISB, write data to the customer's ISB, activate voice-over-data mode, save information about the customer's ISB to disk for future reference, and load that information from disk. The window offers menu options to allow the agent to log on and off his position at the help desk, to change the serial port settings for his position at the help desk, to select the source for data being accessed as local (the help desk position) or remote (the customer's ISB) and the like.

As those skilled in the art will readily appreciate, the various components described

Bright House Networks - Ex. 1008, Page 1358

above form a coherent system which is shown in Fig. 12. In this system, multiple customer locations 900C and help desk location 900HD, which have already been described, interface via PSTN 902 and ISPs 904C, 904HD with one another and with ISPs 904S, which allow access to one or more ISBSSs 1201, one or more e-mail (POP, SMTP, IMAP (which is another mail protocol), etc.) servers 1204, one or more billing servers 1206, one or more Web servers 1208 and any other servers or other system components which can be used.

The present invention can be adapted for use with the H.323 communication standard, which will now be described briefly with reference to Fig. 13. The H.323 standard provides interoperability among products from multiple vendors. The standard includes the H.320 standard for ISDN (integrated services digital network) communication and H.324 for the PSTN. The standard provides for encapsulation of UDP packets (which have been identified above) as RTP (real-time transport protocol) packets.

Fig. 13 shows various components of an H.323 system. Those skilled in the art will readily appreciate that not all components shown in Fig. 13 will necessarily be present.

H.323 system 1300 is implemented on LAN (local-area network) 1302. Terminals 1304 are used by users to communicate; each terminal 1304 can include an ISB, with or without video capabilities, or an PC with audio or audio-video capabilities. Gateway 1306 provides interoperability with other networks, e.g., over PSTN 1308 or ISDN line 1310. MCU (multipoint control unit) 1312 control conferencing among three or more terminals. Gatekeeper 1314 performs network functions such as bandwidth control and translation between IP addresses and names by which terminals 1304, gateway 1306, etc. are known to LAN 1302.

The ISB software is written such that at any time during the operation the user can terminate whichever operation is in progress by simply hanging up the telephone and can hear a

Bright House Networks - Ex. 1008, Page 1359

dial tone by picking up the telephone again. There might be instances in which the hang-up is not recognized by the software because of unexpected interactions between the software and real-life conditions. To prevent the ISB from locking up and possibly blocking the telephone from the user, a watchdog timer can be implemented to recover from these situations and reset the system. In all other instances in which the ISB recognizes that an error has occurred, it plays a prompt which in general terms explains the condition followed by an error code which helps the user to troubleshoot the problem by referring to the manual or which helps the agent at the help desk to diagnose the problem. The error codes have been listed above, although, of course, other error codes could be assigned as needed.

In the instances in which the ISB expects the user to enter data or hang up, a timer can be set with a predefined time-out value. If the user does not respond within time-out period, the prompt is repeated. This process can be repeated up to three times, and if there is no response from the user, then the ISB goes on-hook and, after a short delay, back off-hook .

The ISB can be tested at the factory or elsewhere in the following manner. The ISB is connected to a telephone and to a computer in the manner described above. The computer has appropriate testing software installed thereon. The tester makes a call through the ISB to a second ISB which has been tested and is known to work properly. Any aspect of operation of the ISB under test can be tested, and a report can be generated.

The foregoing detailed description covers interfacing a wireline analog version of the ISB and is illustrative of the various preferred embodiments of the present invention which also include wireline digital versions which are ISDN or LAN based as well as wireless analog or digital versions, either cellular or PCS (personal communication systems). The ISB can also be adapted to work with facsimile machines. The invention is not limited to embodiments using a

Bright House Networks - Ex. 1008, Page 1360

SLIP, PPP or other dialup connection to the Internet; instead, any connection to the Internet or another secondary network, such as a T1 line or a cable modem, can be used. Also, while it is contemplated that a caller will usually want to speak to one called party at a time, conference calls can be implemented with no difficulty. In addition, ISBs can be made with inexpensive digital cameras and LCD screens to allow videophone service by using Internet audiovisual conferencing software such as CU-Seeme. ISBs can also be provided with encryption. Moreover, modifications disclosed separately can be combined in any technically feasible manner, while modifications disclosed together can be implemented separately wherever technically feasible. It will be appreciated that numerous variations and changes can be made not only to provide a range of services but also to interface the many different devices used to access the PSTN, including personal computers and laptops, without departing from the scope of the invention as defined in the accompanying claims.

Bright House Networks - Ex. 1008, Page 1361

We claim:

1. A switch box for connecting a first telephone set and a second telephone set over a selected one of a primary network and a secondary network, the switch box comprising:

primary network connecting means for connecting the first telephone set to the primary network;

secondary network connecting means for connecting the first telephone set to the secondary network, for receiving address information from the secondary network to locate the second telephone set on the secondary network and for establishing a connection over the secondary network between the first telephone set and the second telephone set;

relay means for (i) connecting, when the relay means is in a first state, the first telephone set to the primary network connecting means and for (ii) connecting, when the relay means is in a second state, the first telephone set to the secondary network connecting means; and

switching means for receiving a switch-over command to switch from the primary network to the secondary network and for controlling, in response to the switch-over command, (i) the relay means to disconnect the first telephone set from the primary network connecting means and to connect the first telephone set to the secondary network connecting means and (ii) the secondary network connecting means to establish the connection over the secondary network between the first telephone set and the second telephone set.

2. A switch box as in claim 1, wherein the switching means comprises:

a button on the switch box; and

means for receiving the switch-over command through actuation of the button.

3. A switch box as in claim 1, wherein the switching means comprises means for monitoring the first telephone set to receive the switch-over command through the first telephone

Bright House Networks - Ex. 1008, Page 1362

set.

4. A switch box as in claim 1, wherein the primary network connecting means comprises means for providing a passive pass-through connection between the first telephone set and the primary network.

5. A switch box as in claim 4, wherein:

the primary network is an analog circuit-switched telephone network;

the secondary network is a digital packet-switched data network; and

the secondary network connecting means comprises means for (i) connecting the first telephone set to the digital packet-switched data network, (ii) connecting the first telephone set to the second telephone set over the digital packet-switched data network and (iii) exchanging packets representing voice signals between the first telephone set and the second telephone set over the digital packet-switched data network.

6. A switch box as in claim 4, wherein the secondary network connecting means comprises:

a microprocessor for controlling the connection over the secondary network between the first telephone set and the second telephone set;

memory means for storing embedded software for execution by the microprocessor;

modem means for permitting communication between the microprocessor and the secondary network; and

signal processing means for converting between the voice signals and the packets.

7. A switch box as in claim 6, wherein the signal processing means comprises a vocoder.

8. A switch box as in claim 6, wherein the signal processing means comprises a digital signal processor.

Bright House Networks - Ex. 1008, Page 1363

9. A switch box as in claim 6, wherein the embedded software comprises software for the microprocessor to store identifying information in the memory means regarding the second telephone set, the identifying information being used to retrieve the address information.

10. A switch box as in claim 9, wherein the identifying information regarding the second telephone set comprises a telephone number identifying the second telephone set.

11. A system for communication over a selected one of a primary network and a secondary network, the system comprising a plurality of switch boxes, each for connection to a telephone set, each of the plurality of switch boxes comprising:

primary network connecting means for connecting the telephone set to the primary network;

secondary network connecting means for connecting the telephone set to the secondary network, for receiving address information from the secondary network to locate another telephone set connected to another switch box from among the plurality of switch boxes and for establishing a connection over the secondary network between the telephone set and said other telephone set;

relay means for (i) connecting, when the relay means is in a first state, the telephone set to the primary network connecting means and for (ii) connecting, when the relay means is in a second state, the telephone set to the secondary network connecting means; and

switching means for receiving a switch-over command to switch from the primary network to the secondary network and for controlling, in response to the switch-over command, (i) the relay means to disconnect the telephone set from the primary network connecting means and to connect the telephone set to the secondary network connecting means and (ii) the secondary network connecting means to establish the connection over the secondary network

Bright House Networks - Ex. 1008, Page 1364

between the telephone set and the other telephone set.

12. A system as in claim 11, wherein the switching means comprises:

a button on the switch box; and

means for receiving the switch-over command through actuation of the button.

13. A system as in claim 11, wherein the switching means comprises means for monitoring the telephone set to receive the switch-over command through the telephone set.

14. A system as in claim 11, wherein the primary network connecting means comprises means for providing a passive pass-through connection between the telephone set and the primary network.

15. A system as in claim 14, wherein:

the primary network is an analog circuit-switched telephone network;

the secondary network is a digital packet-switched data network; and

the secondary network connecting means comprises means for (i) connecting the telephone set to the digital packet-switched data network, (ii) connecting the telephone set to the other telephone set over the digital packet-switched data network and (iii) exchanging packets representing voice signals between the telephone set and the other telephone set over the digital packet-switched data network.

16. A system as in claim 14, wherein the secondary network connecting means comprises:

a microprocessor for controlling the connection over the secondary network between the telephone set and the other telephone set;

memory means for storing embedded software for execution by the microprocessor;

modem means for permitting communication between the microprocessor and the

Bright House Networks - Ex. 1008, Page 1365

secondary network; and

signal processing means for converting between the voice signals and the packets.

17. A system as in claim 16, wherein the signal processing means comprises a vocoder.

18. A system as in claim 16, wherein the signal processing means comprises a digital signal processor.

19. A system as in claim 16, wherein the embedded software comprises software for the microprocessor to store identifying information in the memory means regarding the other telephone set, the identifying information being used to retrieve the address information.

20. A system as in claim 19, wherein the identifying information regarding the other telephone set comprises a telephone number identifying the other telephone set.

21. A system as in claim 14, further comprising server means, in communication with the digital packet-switched data network, for (i) receiving a connection request from a first one of the switch boxes which wants to establish a connection over the digital packet-switched data network to a second one of the switch boxes and (ii) sending to the first one of the switch boxes the address information regarding the second one of the switch boxes to allow the first one of the switch boxes to connect to the second one of the switch boxes.

22. A system as in claim 21, wherein the address information regarding the second one of the switch boxes comprises an IP address of the second one of the switch boxes.

23. A system as in claim 21, wherein the server means comprises means for (i) receiving connection requests from the first and second ones of the switch boxes, (ii) queuing a first received one of the connection requests in a queue and (iii) searching the queue in response to a second received one of the connection requests to match the connection requests.

24. A system as in claim 11, further comprising a help desk in communication with at

Bright House Networks - Ex. 1008, Page 1366

least one of the primary network and the secondary network, the help desk having at least one agent station, each of the at least one agent station comprising:

a telephone set, connected to said at least one of the primary network and the second network, for voice communication with the telephone set connected to any of the plurality of switch boxes; and

means for programming said any of the plurality of switch boxes over said at least one of the primary network and the secondary network.

25. A device for allowing a user with a telephone set to send and receive voice mail to and from an electronic mail server on a digital data network, the device comprising:

signal processing means, connected to the telephone set, for (i) converting an outgoing voice mail message spoken by the user into the telephone into an outgoing digital message and (ii) converting an incoming digital message into an incoming voice mail message and playing the incoming voice mail message over the telephone to the user;

communication means, connected to the signal processing means and the digital data network, for (i) sending the outgoing digital message to the electronic mail server for delivery to a recipient and (ii) retrieving the incoming digital message from the electronic mail server; and

control means, connected to the communication means, for receiving commands from the user and for controlling the communication means, in accordance with the commands, to supply the electronic mail server with information identifying the recipient so that the outgoing digital message is delivered to the recipient and to control retrieval and erasure of the incoming digital message from the electronic mail server.

26. A device as in claim 25, wherein the control means comprises means for monitoring the telephone set to receive the commands input by the user through the telephone set.

Bright House Networks - Ex. 1008, Page 1367

27. A device as in claim 25, wherein the information identifying the recipient comprises an electronic mail address for the recipient.

28. A device as in claim 25, wherein the control means is further connected to the signal processing means and comprises means for controlling playback of the incoming voice message in accordance with the commands.

29. A method for connecting a first telephone set and a second telephone set over a of a primary network and then a secondary network, the method comprising:

(a) establishing a first connection between the first telephone set and the second telephone set over the primary network;

(b) agreeing to switch to the second network and disconnecting both the first telephone set and the second telephone set from the primary network;

(c) connecting the first telephone set and the second telephone set to the secondary network;

(d) providing, over the secondary network, at least one of the first telephone set and the second telephone set with address information to connect the first telephone set with the telephone set over the secondary network; and

(e) connecting the first telephone set to the second telephone set via the secondary network.

30. A method as in claim 29, wherein step (b) comprises actuating a dedicated button on a device attached to each of the first telephone set and the second telephone set to disconnect the first telephone set and the second telephone set from the primary network.

31. A method as in claim 29, wherein step (b) comprises issuing a command through a keypad of each of the first telephone set and the second telephone set to disconnect the first

Bright House Networks - Ex. 1008, Page 1368

telephone set and the second telephone set form the primary network.

32. A method as in claim 29, wherein each of the first telephone set and the second telephone set is connected to the primary and secondary networks through a switch box which provides a passive pass-through connection to the primary network during step (a).

33. A method as in claim 32, wherein:

the primary network is an analog circuit-switched telephone network;

the secondary network is a digital packet-switched data network; and

step (e) comprises (i) connecting the first telephone set to the second telephone set over the digital packet-switched data network and (ii) exchanging packets representing voice signals between the first telephone set and the second telephone set over the digital packet-switched data network.

34. A method as in claim 33, wherein the switch box connected to the first telephone set comprises a memory for storing identifying information regarding the second telephone set, the identifying information being used to retrieve the address information.

35. A method as in claim 34, wherein the identifying information regarding the second telephone set comprises a telephone number identifying the second telephone set.

36. A method as in claim 33, wherein step (d) comprises:

(i) sending a connection request from a first one of the switch boxes to a server; and

(ii) sending from the server to the first one of the switch boxes the address information regarding the second one of the switch boxes to allow the switch boxes to connect.

37. A method as in claim 36, wherein the address information regarding the second one of the switch boxes comprises an IP address of the second one of the switch boxes.

38. A method as in claim 36, wherein:

Bright House Networks - Ex. 1008, Page 1369

both switch boxes send connection requests to the server; and

step (d)(ii) comprises:

(A) queuing a first received one of the connection requests in a queue; and

(B) searching the queue in response to a second received one of the connection requests to match the connection requests.

39. A method for allowing a user with a telephone set to send and receive voice mail to and from an electronic mail server on a digital data network, the method comprising:

(a) converting an outgoing voice mail message spoken by the user into the telephone into an outgoing digital message;

(b) converting an incoming digital message into an incoming voice mail message and playing the incoming voice mail message over the telephone to the user;

(c) sending the outgoing digital message to the electronic mail server for delivery to a recipient;

(d) retrieving the incoming digital message from the electronic mail server; and

(e) receiving commands from the user and, in accordance with the commands, supplying the electronic mail server with information identifying the recipient so that the outgoing digital message is delivered to the recipient and controlling retrieval and erasure of the incoming digital message from the electronic mail server.

40. A method as in claim 39, wherein step (e) comprises monitoring the telephone set to receive the commands input by the user through the telephone set.

41. A method as in claim 39, wherein the information identifying the recipient comprises an electronic mail address for the recipient.

42. A method as in claim 39, further comprising controlling playback of the incoming

Bright House Networks - Ex. 1008, Page 1370

voice message in accordance with the commands.

43. A device for dynamically adjusting a communication between a computing device and a digital packet-switched network, the device comprising:

detecting means for monitoring at least a portion of the communication and for detecting a baud rate and a percentage of dropped packets in said at least a portion of the communication;

determining means for making a determination, in accordance with the baud rate and the percentage of dropped packets, as to whether a degree of compression, a packetization and a packet redundancy in the communication are acceptable for the baud rate; and

adjusting means for adjusting at least one of the degree of compression, the packetization and the packet redundancy in accordance with the determination.

44. A device as in claim 43, wherein the determining means comprises:

means for storing a look-up table; and

means for making the determination by applying the baud rate and the percentage of dropped packets to the look-up table.

45. A device as in claim 43, wherein:

the packet redundancy is adjustable to a first state or a second state;

in the first state, each packet in the communication is sent twice; and

in the second state, each packet in the communication is sent once.

46. A method for dynamically adjusting a communication between a computing device and a digital packet-switched network, the method comprising:

(a) monitoring at least a portion of the communication and detecting a baud rate and a percentage of dropped packets in said at least a portion of the communication;

(b) making a determination, in accordance with the baud rate and the percentage of

Bright House Networks - Ex. 1008, Page 1371

dropped packets, as to whether a degree of compression, a packetization and a packet redundancy in the communication are acceptable for the baud rate; and

(c) adjusting at least one of the degree of compression, the packetization and the packet redundancy in accordance with the determination.

47. A method as in claim 46, wherein step (b) comprises:

(i) storing a look-up table in a memory; and

(ii) making the determination by applying the baud rate and the percentage of dropped packets to the look-up table.

48. A method as in claim 46, wherein:

the packet redundancy is adjustable to a first state or a second state;

in the first state, each packet in the communication is sent twice; and

in the second state, each packet in the communication is sent once.

49. A server for allowing a first device and a second device to communicate over a packet-switched network, the server comprising:

means for receiving (i) a first communication request from the first device, the first communication request comprising first address information for locating the first device on the network, and (ii) a second communication request from the second device, the second communication request comprising second address information for locating the second device on the network; and

means for (i) maintaining a communication request queue, (ii) adding a first received one of the first and second communication requests to the queue, (iii) searching the queue in accordance with a second received one of the first and second communication requests to match the first and second received ones of the first and second communication requests (iv) if the

Bright House Networks - Ex. 1008, Page 1372

second received one of the first and second communication requests is the first communication request, providing the second address information to the first device, and (v) if the second received one of the first and second communication requests is the second communication request, providing the first address information to the second device.

50. A server as in claim 49, wherein each of the first and second address information comprises an IP address.

51. A method for allowing a first device and a second device to communicate over a packet-switched network, the method comprising:

(a) receiving a first communication request from the first device, the first communication request comprising first address information for locating the first device on the network;

(b) receiving a second communication request from the second device, the second communication request comprising second address information for locating the second device on the network;

(c) maintaining a communication request queue;

(d) adding a first received one of the first and second communication requests to the queue;

(e) searching the queue in accordance with a second received one of the first and second communication requests to match the first and second received ones of the first and second communication requests;

(f) the second received one of the first and second communication requests is the first communication request, providing the second address information to the first device; and

(g) if the second received one of the first and second communication requests is the second communication request, providing the first address information to the second device.

Bright House Networks - Ex. 1008, Page 1373

52. A method as in claim 51, wherein each of the first and second address information comprises an IP address.

Bright House Networks - Ex. 1008, Page 1374

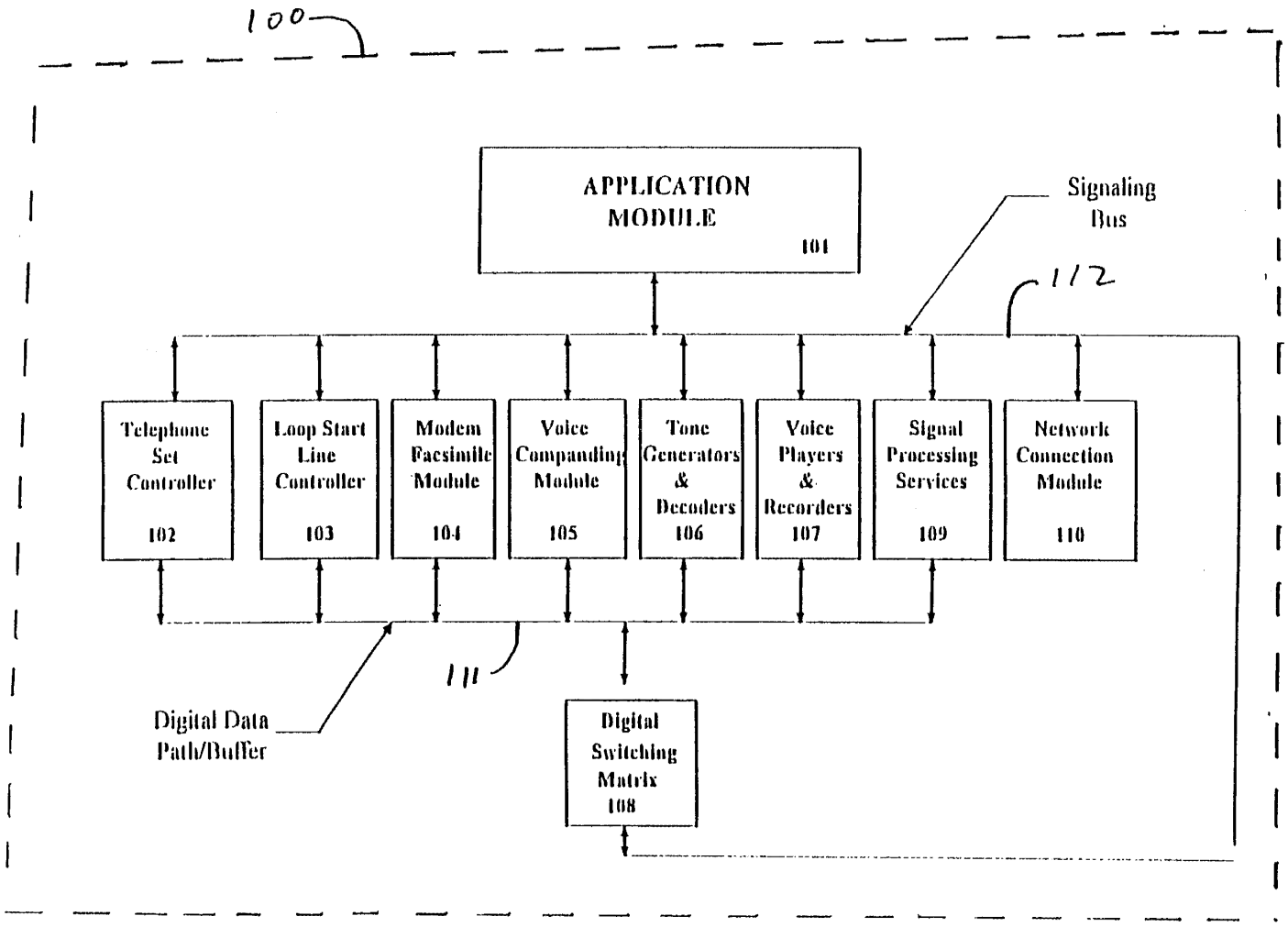
100
APPLICATION MODULE
101
Signaling Bus
112
Telephone Set Controller
102
Loop Start Line Controller
103
Modem Facsimile Module
104
Voice Companding Module
105
Tone Generators & Decoders
106
Voice Players & Recorders
107
Signal Processing Services
109
Network Connection Module
110
111
Digital Data Path/Buffer
Digital Switching Matrix
108

Fig. 1

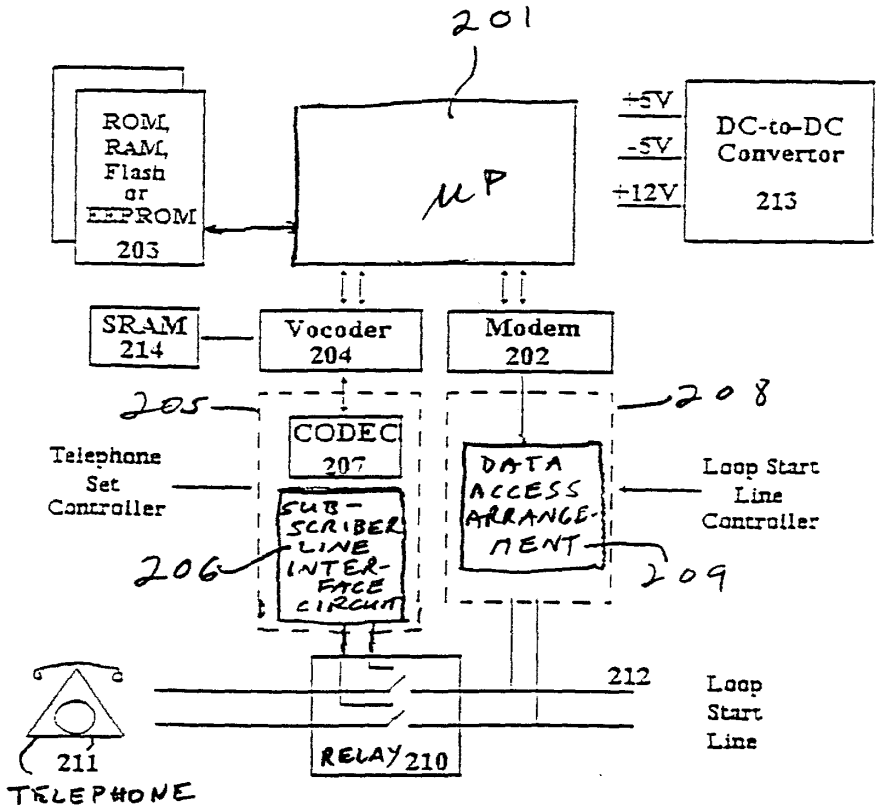

Figure 2

Bright House Networks - Ex. 1008, Page 1376

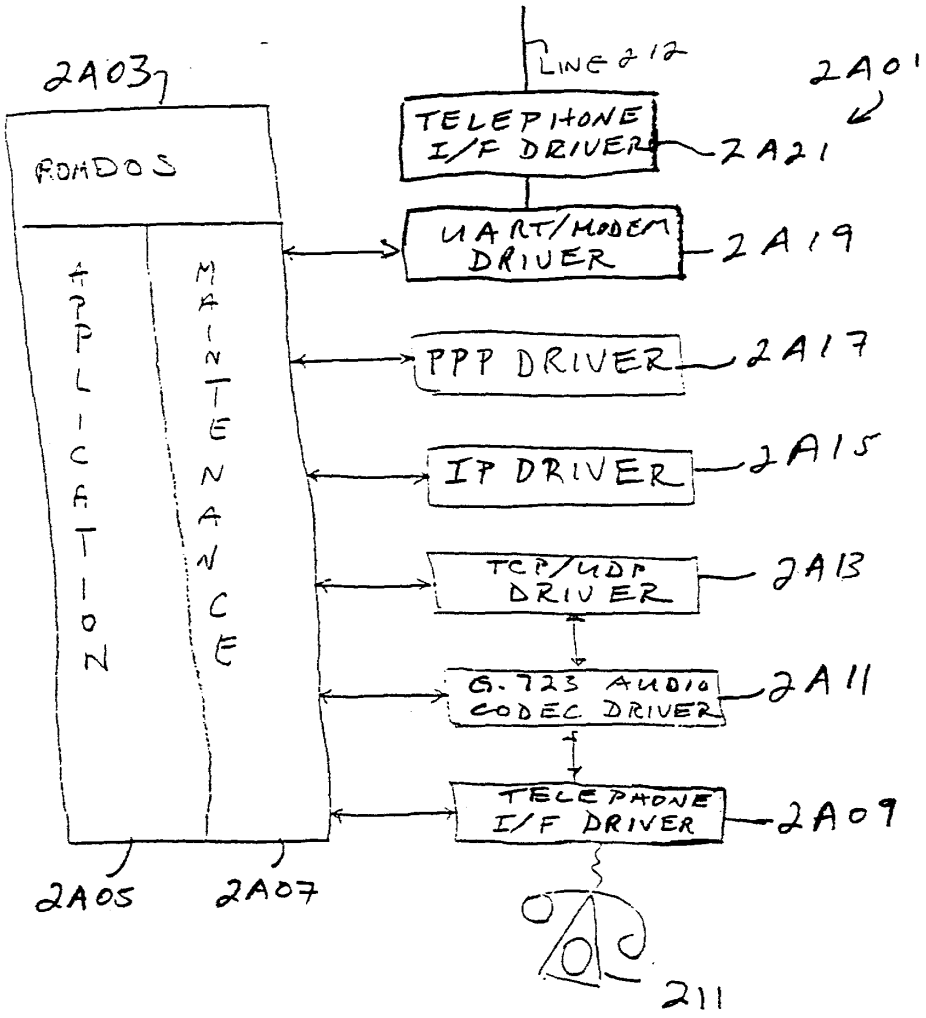

Fig. 2A

Bright House Networks - Ex. 1008, Page 1377

Fig. 2B

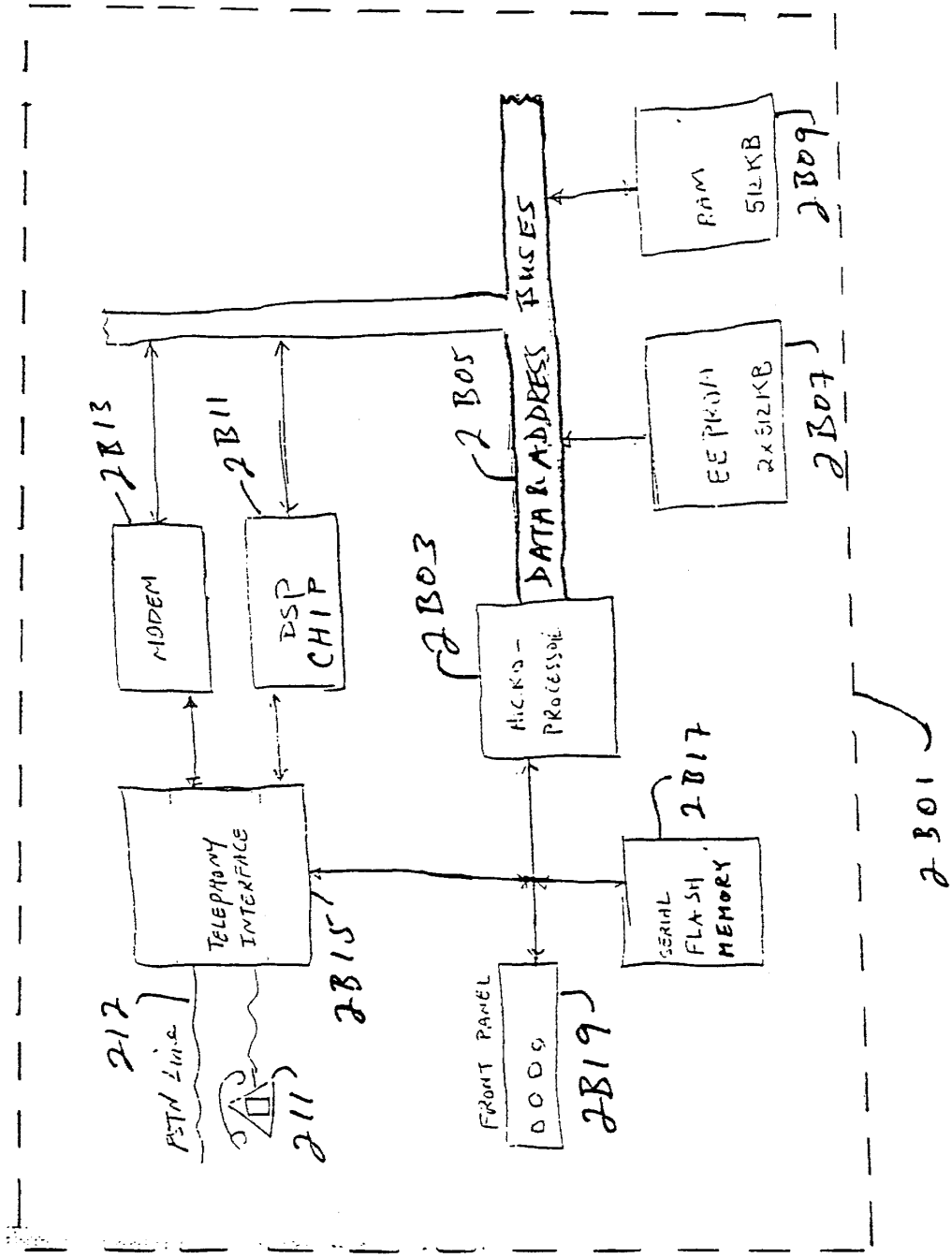

Bright House Networks - Ex. 1008, Page 1378

Fig. 3

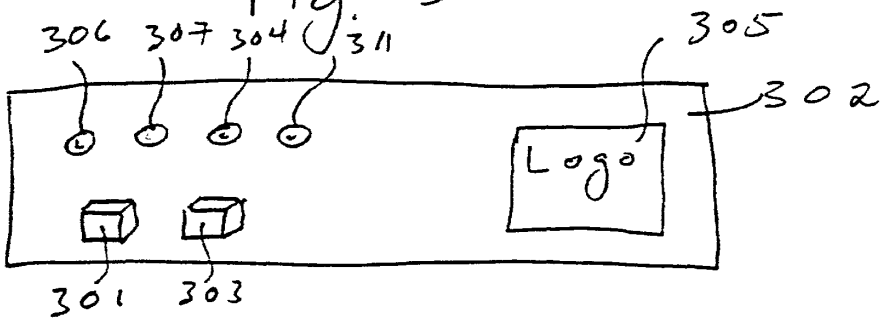

Fig. 4

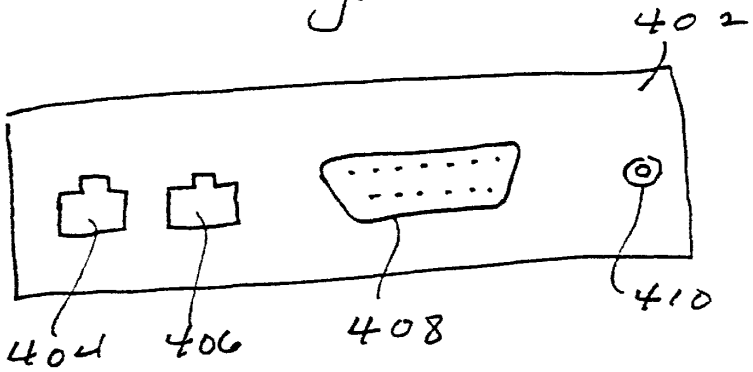

Bright House Networks - Ex. 1008, Page 1379

Fig. 5

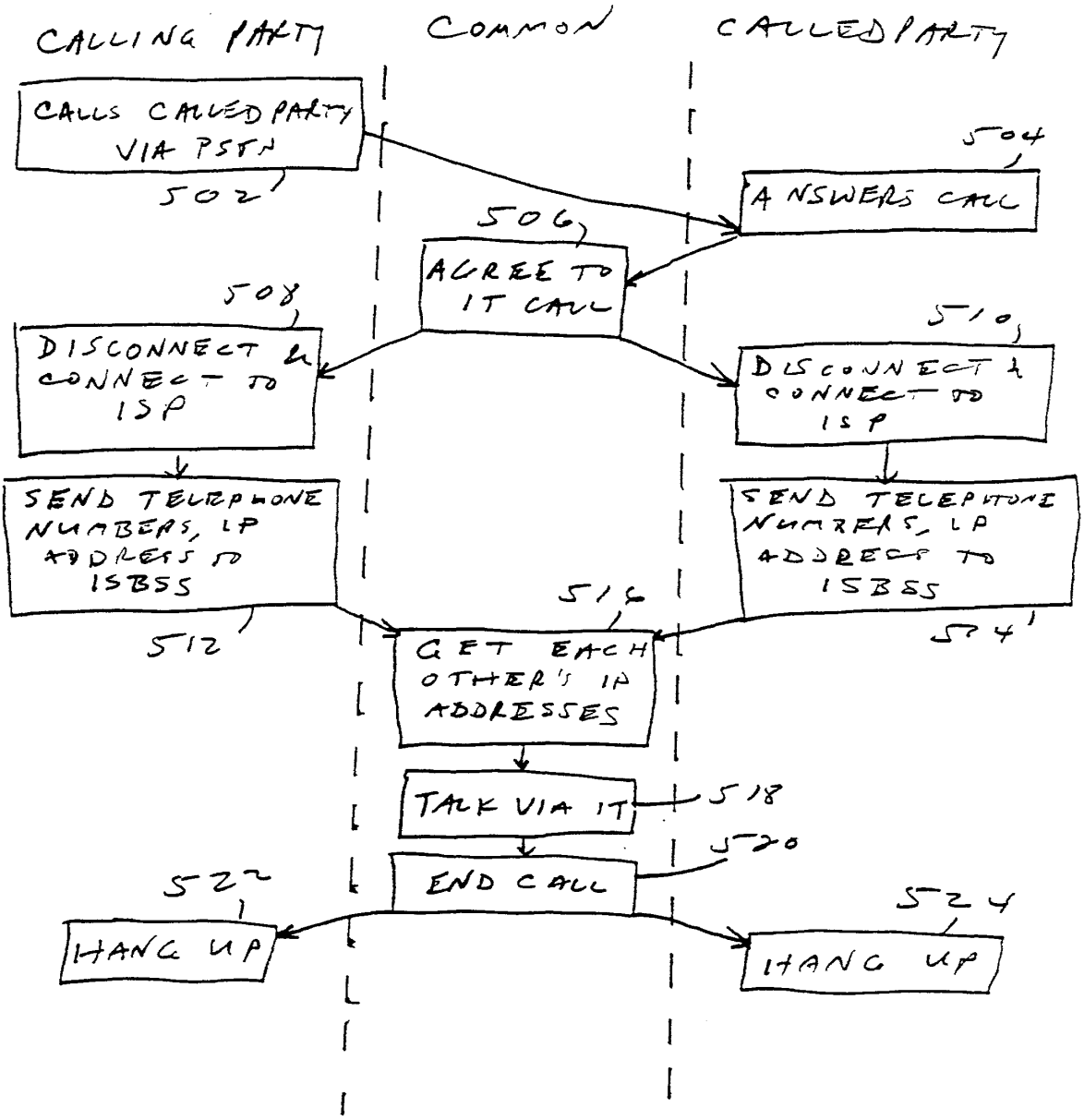

Bright House Networks - Ex. 1008, Page 1380

FIG. 6

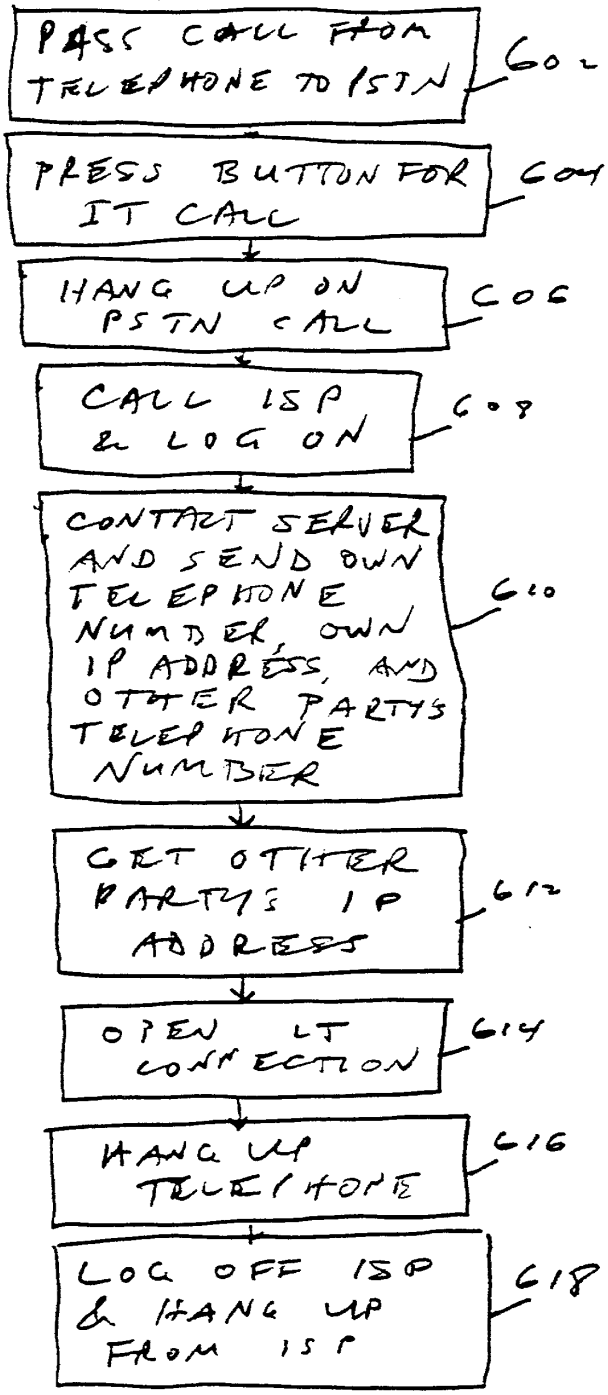

Bright House Networks - Ex. 1008, Page 1381

Fig. 7A

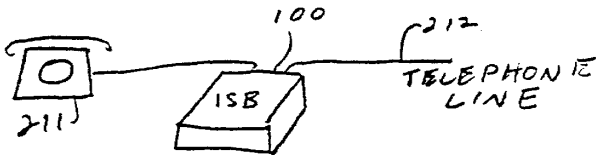

Fig. 7B

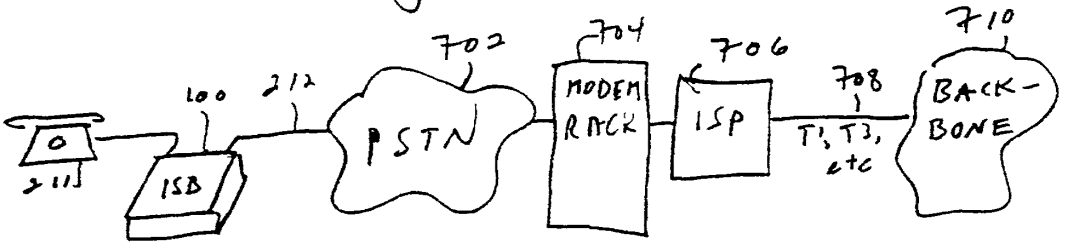

Fig. 7C

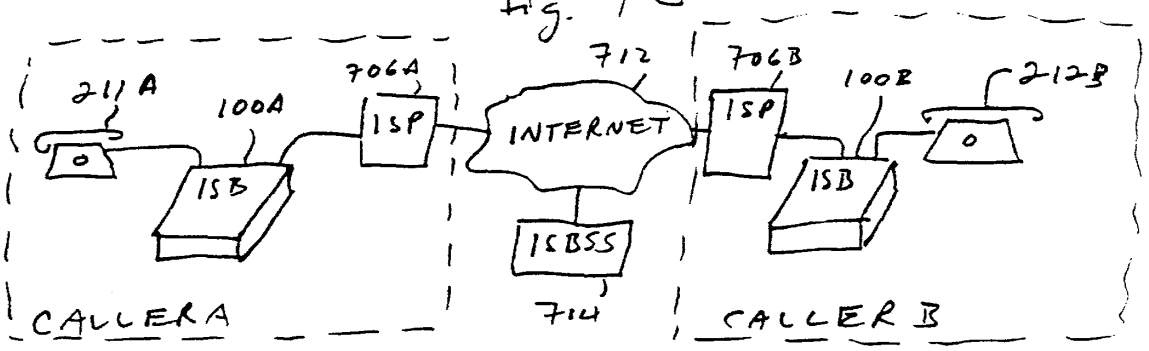

Bright House Networks - Ex. 1008, Page 1382

Fig. 7D

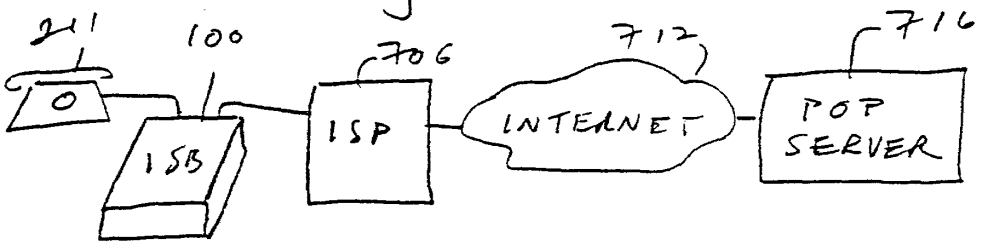

Fig. 7E

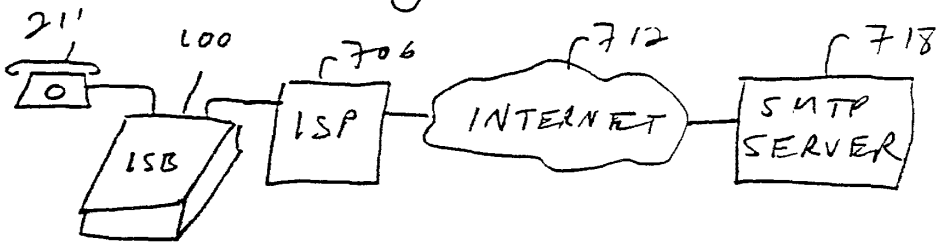

Bright House Networks - Ex. 1008, Page 1383

Fig. 8

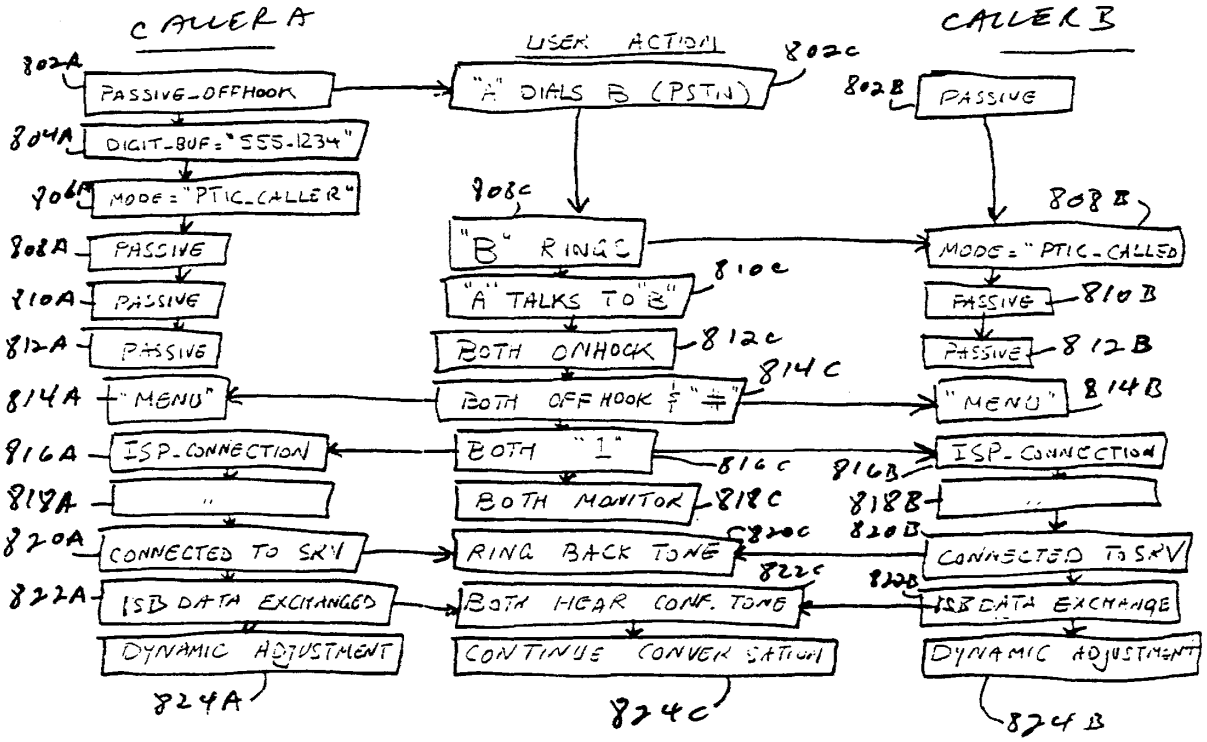

Bright House Networks - Ex. 1008, Page 1384

Fig. 8A

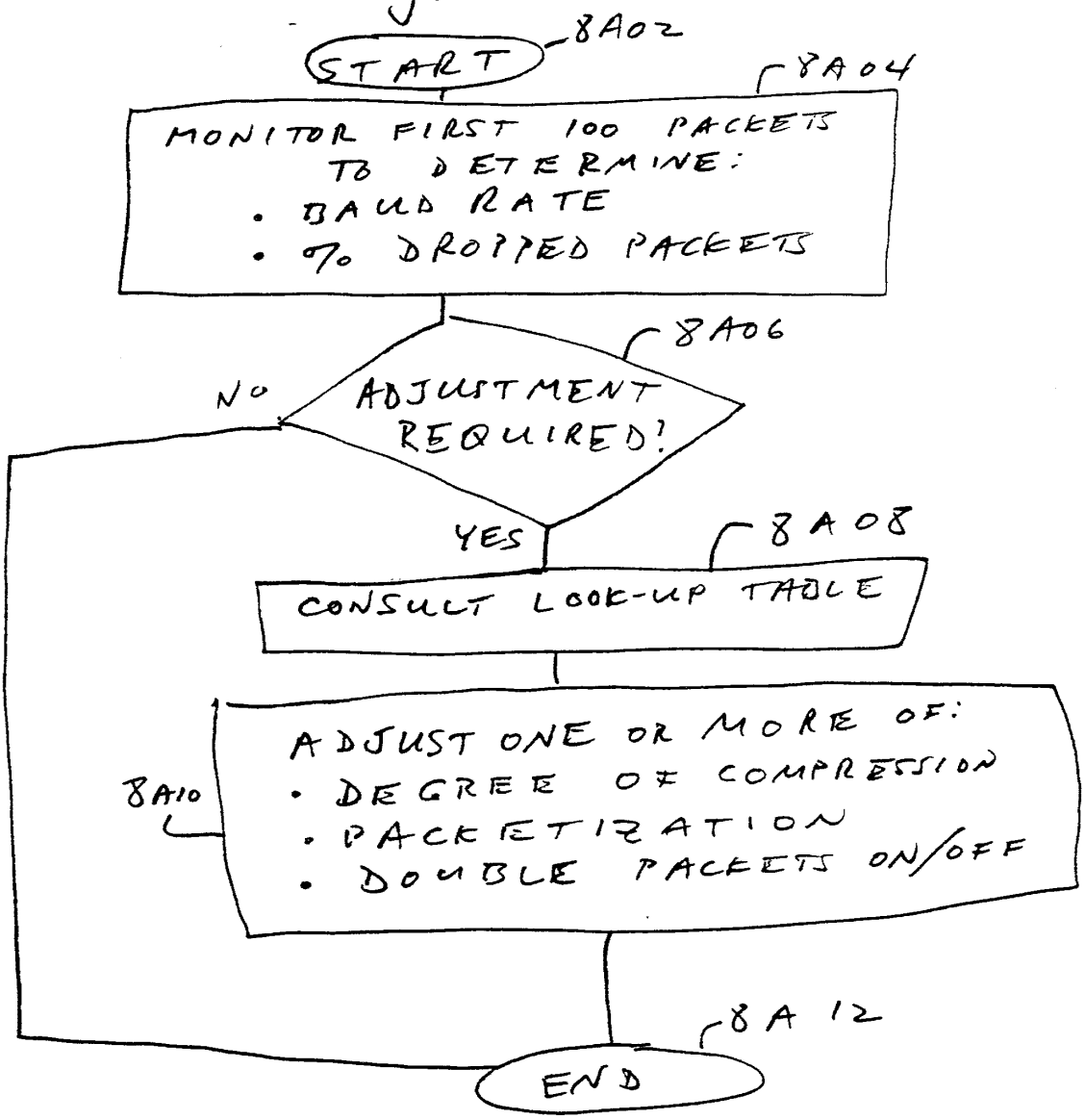

Bright House Networks - Ex. 1008, Page 1385

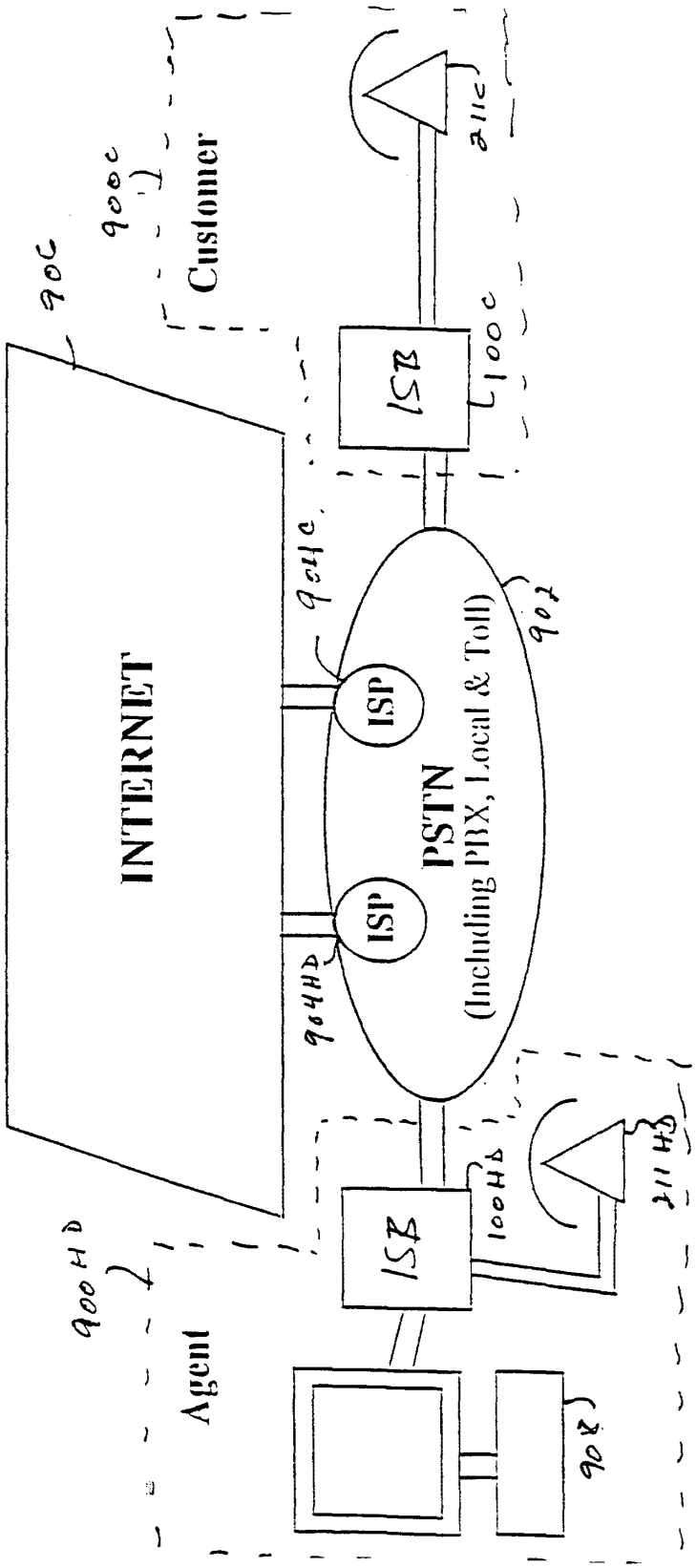

Fig. 9

Bright House Networks - Ex. 1008, Page 1386

Fig. 9A

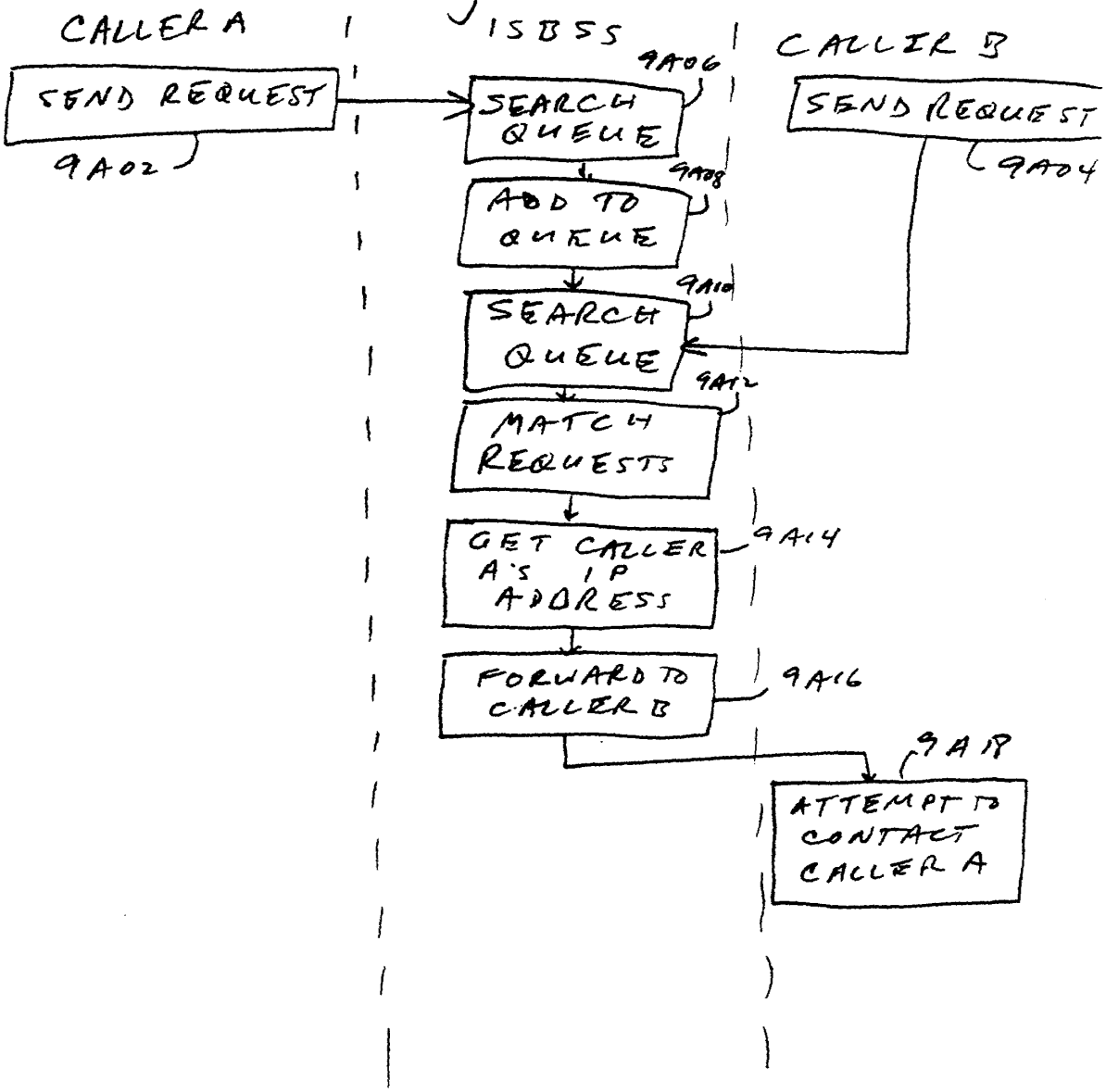

Bright House Networks - Ex. 1008, Page 1387

Fig. 10A

```
unsigned char *itobcd (unsigned int decimalNumber, unsigned int &digitCount)
/*
given an integer, produces and returns a BCD (binary-coded
decimal) string, in which each byte (unsigned char) is logically split
into two 4-bit "nibbles", each of which contains one digit of the
original integer.  Also returned as an argument-by-reference is the
number of digits found in the original integer, which is useful for
later manipulations.

The most significant digit of the original integer is stored "first",
i.e. in the high-order nibble of the leftmost byte of the BCD string.

In the current implementation, (non-leading) zeroes in the original
integer are stored as hex digit 'A' (0xA) in order to distinguish them
from "blank" or "filler" nibbles and/or bytes, which actually contain
zeroes.
*/

{
   // these are static to reduce repeat memory allocation-- for FoneFriend

  static int numOfBytes;                // bytes needed to store it as BCD
  static int numOfDigits;               // for internal use only!
  static unsigned char *BCDbuf;         // the return value goes here
  static unsigned char *bytePtr;        // moving pointer for loading BCDbuf...
  static char BitShift;                 // used for decimal-to-hex conversion
  static char BCDdigits[10] =              // this allows us to do tricks like
     { 0xA, 1, 2, 3, 4, 5, 6, 7, 8, 9 };  //  storing digit 0 as 0xA

    // figure out the number of digits in 'decimalNumber'
  numOfDigits = log10((double ) decimalNumber) + 1;
  if (numOfDigits <= 0)
    return NULL;
  digitCount = numOfDigits;   // digitCount is returned to the user

  numOfBytes = (int ) ceil((double ) numOfDigits / 2.0);


    // set up storage and pointers accordingly
  BCDbuf = new unsigned char[numOfBytes];
  bytePtr = &BCDbuf[numOfBytes-1];

    // clear out the contents of BCDbuf-- correct functioning depends on this
  bzero(BCDbuf, numOfBytes);
```


Bright House Networks - Ex. 1008, Page 1388

Fig. 10B

```
  // we are storing BCD digits from most to least significant, going
  // left to right; and there are two digits per byte.  If there are
  // an odd number of digits to store, then the least significant decimal
  // digit will wind up in the HIGH-order nibble of the last (rightmost)
  // byte used; if there are an even number of digits, this last digit
  // will end up in the LOW-order nibble of the last byte.  Since we start
  // by storing the least significant decimal digit and move backwards,
  // we have to know right away which nibble to put it in.  QED.
if (numOfDigits % 2)      // we have an odd number of digits
  BitShift = 4;           // start in high-order nibble (left-shift 4 bits)
else BitShift = 0;        // start in low-order nibble (no shift)


while (numOfDigits--) {  // we have at least one more digit to do

    // get the last digit of 'decimalNumber' and put it in the
    // appropriate nibble
  *bytePtr += (BCDdigits[decimalNumber % 10] << BitShift);


    // now, we need to get ready to deal with the next digit.
    // crafty code alert!  BitShift can have the values 0 and 4; if it
    // is currently 0, then we just handled the LOW-order nibble of a
    // byte, and we will stay within this byte to do the next digit.
    // But if BitShift is currently 4, we just did the HIGH-order byte
    // and we can move back to the previous byte.  The following
    // very confusing code does that for you:
  bytePtr -= (BitShift / 4);

    // of course, the value of BitShift must now be toggled:

   BitShift = 4 - BitShift;

     // finally, we line up 'decimalNumber' to deal with the next digit
     // in line, by way of throwing away the last digit we looked at, which
     // was the least significant digit of 'decimalNumber'.
   decimalNumber /= 10;
     // at long last, we're ready to copy the digit into the BCD string:
   //    *bytePtr += (BCDdigits[decimalNumber % 10] << BitShift);

 }

 return BCDbuf;
}
```


Bright House Networks - Ex. 1008, Page 1389

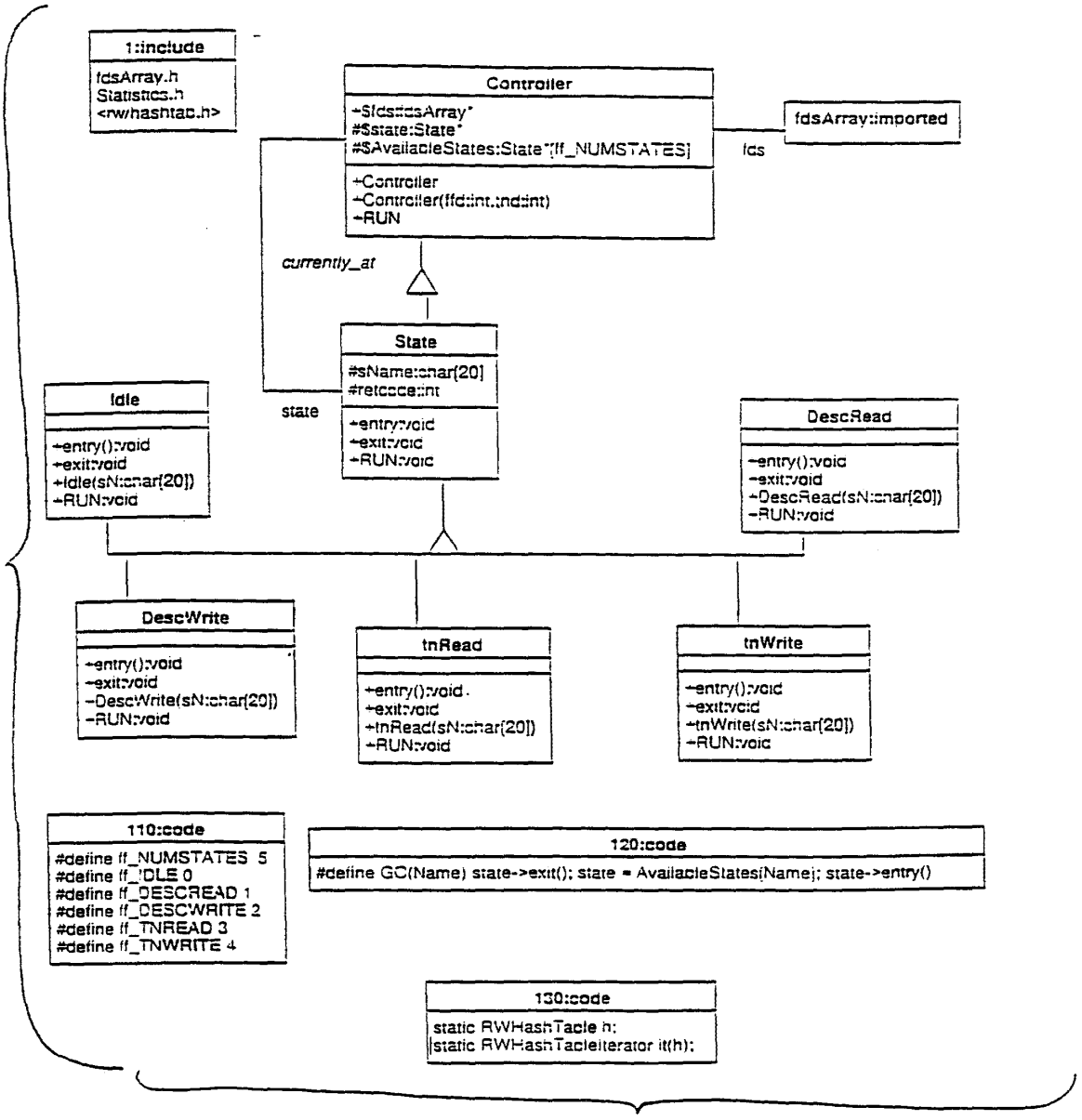

Fig. 11

Bright House Networks - Ex. 1008, Page 1390

Fig. 11A

```
typedef struct {
  unsigned short struct_type;
     // tells us how to interpret the tx_data
     // 1001  t_ConnectPacket
     // 1002  t_RxConnectPacket
  unsigned short len;  // length of data in tx_data
  char tx_data[252];   // 252 bytes to handle future expansion
} tx_packet;
```

Fig. 11B

```
typedef struct {
      unsigned char  hw_version; // identifies the originator of this struct
    unsigned char  sw_version; // 1 == 1st version
       // the connection type should be the first bytes read.
       // the types are:
       //      1 - caller non-1st time
       //      2 - called
       //      3 - caller 1st time
       //      4 - mmic
       //      5 - message
       //      7 - self-test
       //      8 - upgrade request
     unsigned short int connect_type;
     unsigned char my_phone_num[8];
     unsigned char his_phone_num[8];
     unsigned long my_serial_num;
     unsigned long his_serial_num;
     unsigned char my_ip[4];
     t_BillingData bill_rec;
  } t_ConnectPacket;
```

Fig. 11C

```
  typedef struct {
      unsigned long start_time; // start time of previous service
      unsigned long stop_time;  // duration (in seconds) of previous service
      unsigned char phone[8];   // phone number of previous call
     unsigned char stat_data[8]; // statistical data about previous service
  } t_BillingData;
```


Bright House Networks - Ex. 1008, Page 1391

Fig. 11 D

```
typedef struct {
  unsigned short struct_type;
     // tells us how to interprat the tx_data
     // 1001  t_ConnectPacket
     // 1002  t_RxConnectPacket
  unsigned short len;  // length of data in tx_data
  char tx_data[252];   // 252 bytes to handle future expansion
} tx packet;
```

Fig. 11 E

```
typedef struct {
  // New fields added to allow for commands
  unsigned char pckt_type;  // 0 == message, 1 == error
  unsigned char me_type;
     // messages:
     // 0 = return usable IP addr,
     // 1 = No match: IP == 0.0.0.0,
     // 2 = go to another server; IP address given
     // 3 = no action to take (response to message or self-test; IP == 0.0.0.0)
     // errors:
     // 0 = problem on my end; retry from scratch
     // 1 = problem with your data; retry from scratch
     // 2 = you are not an active user of the requested FF Service.
  unsigned char commandType;
     // 0 == no command
     // 1 == contact command server for further commands
     //        send new IP addr in command
     // 2 == set Update Available light on
     // 3 == unset Update Available light
     // 4    new main server
     //        send new IP addr in command
     // 5 == new backup server
     //        send new IP addr in command
   unsigned char commandSize;  // number of bytes found in command[]
   unsigned char his_ip[4];
   unsigned long cur_time;
   char command[32];
     // If commandSize <= 28 we can rely on
     // bytes command[28] .. command[31] containing the
     // sender serial number just for debugging purposes.
     // we have not specified what a command looks like.
     // commandType == 2:
     //   commandSize = 8, command = "10 2 1\r\n"
     // commandType == 4:
     //   commandSize = 21, command = "0 1 0 137 140 7 222\r\n"
     // commandType == 21:
     //   commandSize = 8, command = "0 1 1 137 140 7 222\r\n"
} t_RxConnectPacket;
```


Bright House Networks - Ex. 1008, Page 1392

Fig. 11 F

```
********** Results from generation of Statistics **********

***** Absolute Value Counters *****
  m Entered Idle state          : 985131
  m FFServer connection Requests: 0
  m Entered DescRead state      : 0
  m Entered DescWrite state     : 0
  m DescRead ok                 : 0
  m DescRead failed: wrong size : 0
  m DescRead failed: disconnect : 0
  m DescRead failed: orderly rel: 0
  m DescWrite ok                : 0
  m DescWrite failed            : 0
  m Init New Descriptor         : 1
  m Conn discon in complete list: 0
  m Invalid Client Port         : 0
  m Entered Housekeeping        : 985099
  m Completed Connection RQ     : 0
  m Expired Connection RQ       : 0
  m Inactive Connection RQ      : 0
  m tnClient Write ok           : 29
  m tnClient Write failed       : 0
  m Serial Number Invalid       : 0
***** Maximum Value Counters *****
  m Max Complete Connection Q   : 0
  m Max Stack Size              : 0
  m Max Connection List Size    : 0
***** Minimum Value Counters *****
  m Min Stack Size              : 2147483647
  m Min Connection List Size    : 0
********** End of StatisticsReport **********

Monitoring Stopped
```

Fig. 11 G

```
Mon Feb 23 13:06:31 1998> New logged session of FFServer

Mon Feb 23 13:06:31 1998> Number of Invalid Serial Numbers: 1000
Mon Feb 23 13:06:55 1998> New TNClient (IP.Port): 137.140.8.104.36239
Mon Feb 23 13:07:55 1998> Closing  TNClient (IP.Port): 137.140.8.104.36239
Mon Feb 23 13:07:56 1998> (CL) Unknown ConnectType (IP.Port): 137.140.8.104.36239
Mon Feb 23 13:07:57 1998> (CL) Wrong Packet Size  (IP.Port): 137.140.8.104.36239
Mon Feb 23 13:07:58 1998> (CL) PcktType != 1001  (IP.Port): 137.140.8.104.36239
Mon Feb 23 13:07:59 1998> (CL) tx_packetPtr was NULL  (IP.Port): 137.140.8.104.36239
Mon Feb 23 13:07:60 1998> (CL) Failed on attempt to insert  (IP.Port): 137.140.8.104.36239
```


Bright House Networks - Ex. 1008, Page 1393

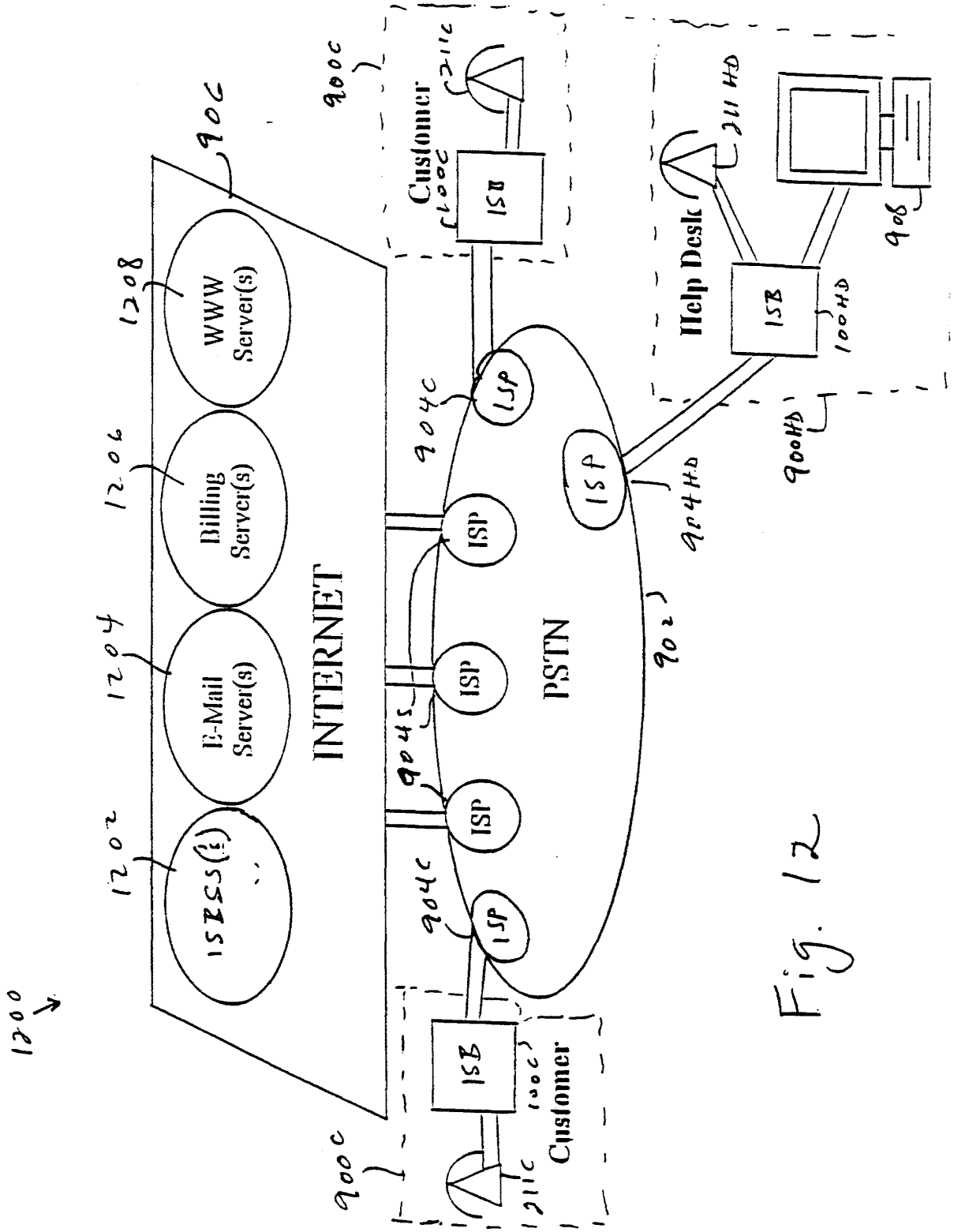
1200
1202
1204
1206
1208
902
904a
904b
904c
904d
904HD
900a
900b
900c
900HD
906
908
211a
211b
211c
211 HD
100a
100b
100c
100 HD
ISP
ISP
ISP

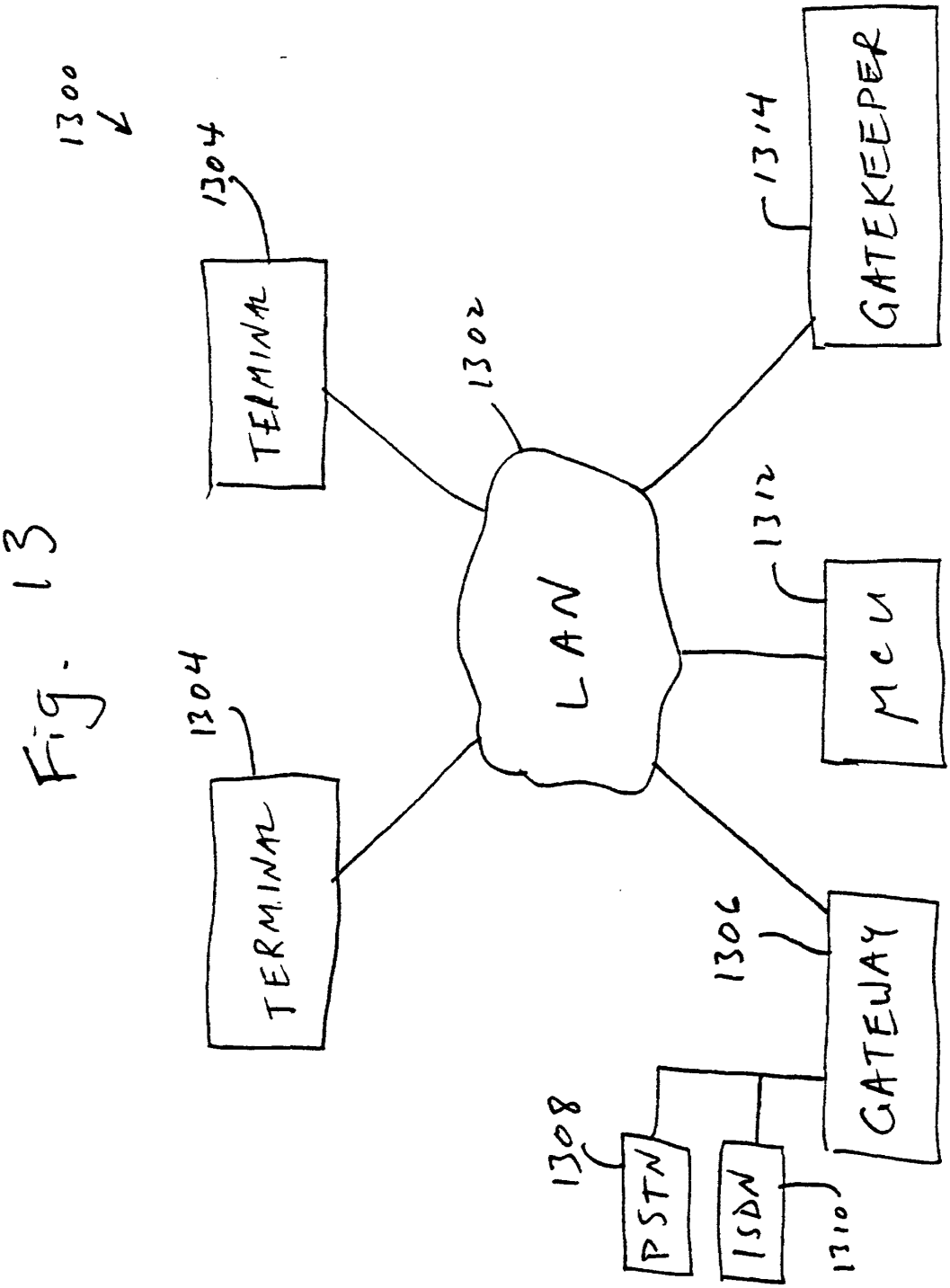

Fig. 13

Bright House Networks - Ex. 1008, Page 1395

INTERNATIONAL SEARCH REPORT

International application No.
PCT/US98/03630

A. CLASSIFICATION OF SUBJECT MATTER

IPC(6) :H04L 12/28, 12/56
US CL :370/352

According to International Patent Classification (IPC) or to both national classification and IPC

B. FIELDS SEARCHED

Minimum documentation searched (classification system followed by classification symbols)

U.S. : Please See Extra Sheet.

Documentation searched other than minimum documentation to the extent that such documents are included in the fields searched

Electronic data base consulted during the international search (name of data base and, where practicable, search terms used)

APS (PSTN, Internet telephony, switch boxes, ISP, Internet service provider, Internet protocol, Internet)

C. DOCUMENTS CONSIDERED TO BE RELEVANT

Category*	Citation of document, with indication, where appropriate, of the relevant passages	Relevant to claim No.
Y	US 5,473,676 A (FRICK et al) 05 December 1995, col. 3, line 37 to col. 4, line 3.	1-10
Y	US 5,553,122 A (HABER et al) 03 September 1996, col. 2, lines 12-61)	1-10
A, P	US 5,608,786 A (GORDON) 04 March 1997.	1-52

☐ Further documents are listed in the continuation of Box C. ☐ See patent family annex.

*	Special categories of cited documents:	"T"	later document published after the international filing date or priority date and not in conflict with the application but cited to understand the principle or theory underlying the invention
"A"	document defining the general state of the art which is not considered to be of particular relevance	"X"	document of particular relevance; the claimed invention cannot be considered novel or cannot be considered to involve an inventive step when the document is taken alone
"E"	earlier document published on or after the international filing date	"Y"	document of particular relevance; the claimed invention cannot be considered to involve an inventive step when the document is combined with one or more other such documents, such combination being obvious to a person skilled in the art
"L"	document which may throw doubts on priority claim(s) or which is cited to establish the publication date of another citation or other special reason (as specified)	"&"	document member of the same patent family
"O"	document referring to an oral disclosure, use, exhibition or other means		
"P"	document published prior to the international filing date but later than the priority date claimed		

Date of the actual completion of the international search	Date of mailing of the international search report
03 JUNE 1998	06 AUG 1998

Name and mailing address of the ISA/US	Authorized officer
Commissioner of Patents and Trademarks Box PCT Washington, D.C. 20231	JASON CHAN
Facsimile No. (703) 305-3230	Telephone No. (703) 305-3900

Form PCT/ISA/210 (second sheet)(July 1992)★

INTERNATIONAL SEARCH REPORT

International application No.
PCT/US98/03630

B. FIELDS SEARCHED
Minimum documentation searched
Classification System: U.S.

370/352, 383, 389, 390, 392, 401, 408, 410; 379/ 89, 90.01, 93.01, 93.07, 93.08, 93.14, 93.23, 93.29, 100.11, 100.13, 114, 201, 220

PCT WORLD INTELLECTUAL PROPERTY ORGANIZATION
International Bureau

INTERNATIONAL APPLICATION PUBLISHED UNDER THE PATENT COOPERATION TREATY (PCT)

(51) International Patent Classification 6 : H04Q 7/22, H04L 29/06, H04M 7/12 // 3/50 | A1

(11) International Publication Number: **WO 99/12365**

(43) International Publication Date: 11 March 1999 (11.03.99)

(21) International Application Number: PCT/SE98/01349

(22) International Filing Date: 8 July 1998 (08.07.98)

(30) Priority Data:
9703121-5 29 August 1997 (29.08.97) SE

(71) Applicant *(for all designated States except US)*: TELIA AB (publ) [SE/SE]; Mårbackagatan 11, S-123 86 Farsta (SE).

(72) Inventors; and
(75) Inventors/Applicants *(for US only)*: HYLLANDER, Klas [SE/SE]; Ruddammsvägen 41, 4tr, S-114 21 Stockholm (SE). WINROTH, Mats, Olof [SE/SE]; Lyckogången 4, S-135 54 Tyresö (SE).

(74) Agent: PRAGSTEN, Rolf; Telia Research AB, Corporate Patent Dept., Vitsandsgatan 9, S-123 86 Farsta (SE).

(81) Designated States: EE, JP, LT, LV, NO, US, European patent (AT, BE, CH, CY, DE, DK, ES, FI, FR, GB, GR, IE, IT, LU, MC, NL, PT, SE).

Published
With international search report.

(54) Title: COMMUNICATION SYSTEM INCLUDING MEANS FOR TRANSMITTING INTERNET ADDRESSES VIA SMS

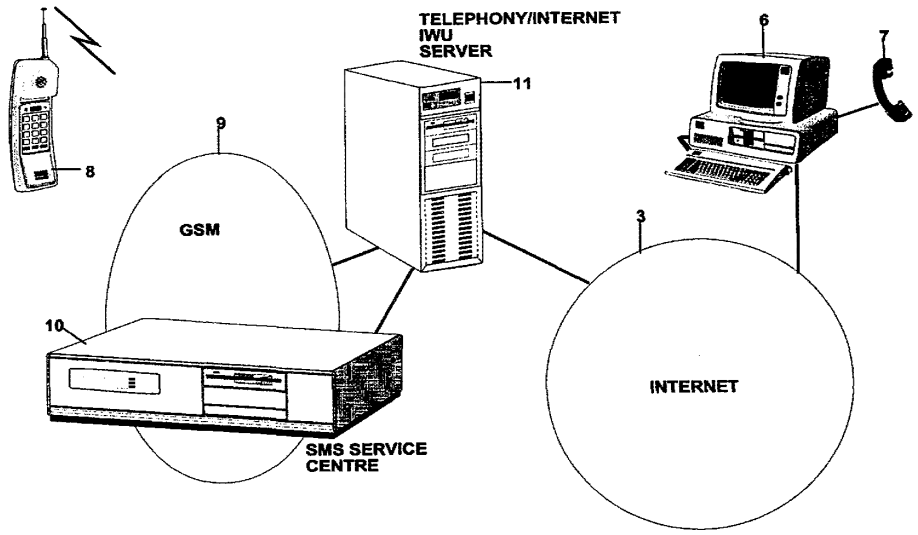

(57) Abstract

The invention provides a communication system, adapted to establish connections to, and between, Internet users, including a cellular radio communication network adapted to provide a short message service (SMS), and a server adapted to facilitate the establishment of a telephony/Internet connection between a mobile subscriber station of said network and an Internet user. SMS is used to transfer, from the mobile subscriber station to the server, information identifying the Internet address for the Internet user and, from the server to the mobile subscriber station, information relating to the required connection between the mobile subscriber station and the Internet user.

FOR THE PURPOSES OF INFORMATION ONLY

Codes used to identify States party to the PCT on the front pages of pamphlets publishing international applications under the PCT.

AL	Albania	**ES**	Spain	**LS**	Lesotho	**SI**	Slovenia
AM	Armenia	**FI**	Finland	**LT**	Lithuania	**SK**	Slovakia
AT	Austria	**FR**	France	**LU**	Luxembourg	**SN**	Senegal
AU	Australia	**GA**	Gabon	**LV**	Latvia	**SZ**	Swaziland
AZ	Azerbaijan	**GB**	United Kingdom	**MC**	Monaco	**TD**	Chad
BA	Bosnia and Herzegovina	**GE**	Georgia	**MD**	Republic of Moldova	**TG**	Togo
BB	Barbados	**GH**	Ghana	**MG**	Madagascar	**TJ**	Tajikistan
BE	Belgium	**GN**	Guinea	**MK**	The former Yugoslav Republic of Macedonia	**TM**	Turkmenistan
BF	Burkina Faso	**GR**	Greece			**TR**	Turkey
BG	Bulgaria	**HU**	Hungary	**ML**	Mali	**TT**	Trinidad and Tobago
BJ	Benin	**IE**	Ireland	**MN**	Mongolia	**UA**	Ukraine
BR	Brazil	**IL**	Israel	**MR**	Mauritania	**UG**	Uganda
BY	Belarus	**IS**	Iceland	**MW**	Malawi	**US**	United States of America
CA	Canada	**IT**	Italy	**MX**	Mexico	**UZ**	Uzbekistan
CF	Central African Republic	**JP**	Japan	**NE**	Niger	**VN**	Viet Nam
CG	Congo	**KE**	Kenya	**NL**	Netherlands	**YU**	Yugoslavia
CH	Switzerland	**KG**	Kyrgyzstan	**NO**	Norway	**ZW**	Zimbabwe
CI	Côte d'Ivoire	**KP**	Democratic People's Republic of Korea	**NZ**	New Zealand		
CM	Cameroon			**PL**	Poland		
CN	China	**KR**	Republic of Korea	**PT**	Portugal		
CU	Cuba	**KZ**	Kazakstan	**RO**	Romania		
CZ	Czech Republic	**LC**	Saint Lucia	**RU**	Russian Federation		
DE	Germany	**LI**	Liechtenstein	**SD**	Sudan		
DK	Denmark	**LK**	Sri Lanka	**SE**	Sweden		
EE	Estonia	**LR**	Liberia	**SG**	Singapore		

Communication system including means for transmitting internet addresses via SMS

The invention relates to a communication system including a cellular radio communication network, such as a Global System for Mobile Communication (GSM) network, that is adapted to enable a GSM subscriber to make an Internet telephone call to an Internet user. In particular, a 'short message service' (SMS) is used to transfer address information for the Internet user to an Internet server. The invention also relates to a method for enabling a GSM subscriber to make an Internet telephone call to an Internet user using SMS to transfer address information for the Internet user.

It is highly probable that, within a few years, a very large proportion of the population of, for example, Sweden, will use the Internet in their day-to-day activities for a number of purposes, including, inter alia:

- entertainment;
- electronic shopping/banking;
- retrieving information in respect of a wide range of subject matter;
- as an information bank; and
- person-to-person communication.

At the present time, e-mail is the major Internet application, but it would clearly be of advantage to telephone subscribers if Internet telephony became, in the long term, a readily available subscriber service for personal communication. Forecasts envisage that Internet traffic, as compared with present day levels, could be increased many times by telephony. For a telephone operator, this is a development which, although it could reduce revenues, will give rise to major developments in, and/or opportunities for, new subscriber services.

At the present time, a number of different Internet telephony solutions are

currently available and in commercial operation.

The main advantage of known Internet telephony services is that the cost of long-distance calls can be considerably reduced. This cost reduction is effected by using local access points for the telephone calls and by using the Internet for the long-range transportation/transmission of telephone traffic. Services already launched include, inter alia:

- telephony from Internet-connected users to PSTN (Public Switched Telephone Network) subscribers, in which the PSTN subscriber is called by a local interworking server;

- a service in which both A-subscribers and B-subscribers are PSTN-connected to local servers which have contact with each other via the Internet - it will be seen from the subsequent description of the present invention that, in the longer term, it will also be able to be transmit speech via GSM in the same manner.

The mobile cellular radio communication network, known as GSM, which is covered by standards developed and promulgated by the European Telecommunications Standards Institute (ETSI), offers a variety of services to users, other than voice, including, inter alia, data services, short message services, and broadcast services. The ETSI GSM Standards specify, in addition to the radio interface, a complete telecommunications network with radio access by the user. Since the architecture, and operational aspects, of GSM are well known to persons skilled in the art, only those aspects of GSM which are of direct relevance to the present invention will be described in this patent specification.

Thus, a GSM mobile connection is distinguished from a conventional PSTN connection in that the mobile station, apart from having access to speech services, can access a short message service (SMS).

SMS is a feature which is incorporated into digital mobile telephone networks,

and can be divided into two types, point-to-point services (SMS-PP), and broadcast services (SMS-CB).

SMS-PP allows a brief message (up to 160 characters) to be sent between a mobile telephone and a Service Centre (SC). Larger messages can optionally be created by concatenating multiple messages (the protocol allows up to 10 messages to be concatenated in this way). The SC is adapted to send, or receive, messages from a wide variety of sources, in addition to a GSM mobile telephone, for example, fax, normal telephone, dial up modems, public, or private data networks etc.. This means that the service is not limited to sending messages between GSM mobile telephones, but can be used to send, or receive, messages from the wider telecommunications network.

An advantage of using SMS, in the present invention, is that it can be used by a GSM subscriber to establish a telephone connection to an Internet-connected user, without any additional equipment being necessary.

It is an object of the present invention to provide a communication system including a cellular radio communication network, such as a Global System for Mobile Communication (GSM) network, that is adapted to use a short message service (SMS) to enable a GSM subscriber to make an Internet telephone call to an Internet user. In particular, SMS is used to transfer address information for the Internet user to an Internet server.

It is another object of the present invention to provide a method for enabling a GSM subscriber to make an Internet telephone call to an Internet user using SMS to transfer address information for the Internet user.

According to a first aspect of the present invention, there is provided, a communication system adapted to establish connections to, and between, Internet users, characterised in that said communication system includes a cellular radio communication network adapted to provide a short message service (SMS), and a server adapted to facilitate the establishment of a telephony/Internet connection between a mobile subscriber station of said network and an Internet user, and said SMS is adapted

to transfer, from said mobile subscriber station to said server, information identifying the Internet address for said Internet user; and, from said server to said mobile subscriber station, information relating to said connection between said mobile subscriber station and said Internet user.

SMS may be used to transfer the following information to said telephony/Internet server:

(a) the Internet address for an Internet-connected computer terminal of said Internet user; and

(b) a specific identity for said mobile subscriber station, for example, a telephone number for said mobile subscriber station.

The telephony/Internet server may include analysing means for effecting, on receipt of said SMS-transferred information, an A-number analysis to determine the A-telephone number identity of said mobile subscriber station.

The telephony/Internet server may be adapted, in response to receipt of said SMS-transferred information from said mobile subscriber station, to send an SMS to said mobile subscriber station including the following information:

(a) that call connection to said Internet user is possible; and

(b) the server's telephone number.

The telephony/Internet server may be adapted, on receipt of a call from said mobile subscriber station, made using the server's telephone number, to identify said mobile subscriber station (calling party), associate the telephone call with the Internet address previously transferred to said server by said mobile subscriber station, and connect the telephone call to the Internet address.

The telephony/Internet server may be adapted to identify said mobile subscriber

station (calling party) using said A-number analysing means. The Internet address may be associated with the A-telephone number of said mobile subscriber station for a specific period of time which is monitored by a system timer.

The telephony/Internet server may be adapted to connect the telephone call either directly to the Internet address, or to the Internet address via at least one additional Internet server, a server at the end of this chain being adapted to provide Internet telephony services.

The telephony/Internet server may include means for establishing and storing a list of Internet addresses for each mobile subscriber station user subscribing to the system, and each one of said Internet addresses may have an address list number.

The telephony/Internet server may be adapted, in response to receipt of said SMS-transferred information from said mobile subscriber station, to send an SMS to said mobile subscriber station including the following information:

(a) that call connection to said Internet user is possible;

(b) the server's telephone number; and

(c) an address list number for the Internet address, each address list number corresponding to one of the Internet addresses in the mobile subscriber station user's address list in the telephony/Internet server.

The address list numbers may be stored in a respective mobile subscriber station's telephone number list.

The mobile subscriber station may be adapted to request from said telephony/Internet server, and said telephony/Internet server may be adapted to supply to the mobile subscriber station, a complete listing of the Internet address list.

The mobile subscriber station may be adapted to search for a specific one of the

Internet addresses stored by said telephony/Internet server.

The telephony/Internet server may be adapted, on receipt of a call connection request from a mobile subscriber station to an unlisted Internet address, to store, and assign an address list number to, the unlisted Internet address, and send back, to the mobile subscriber station, via SMS, the following information to enable a user of said mobile subscriber station to call said Internet address:

(a) the assigned address list number;

(b) the server's telephone number; and

(c) information that call connection is possible to the Internet address.

According to a second aspect of the present invention, there is provided, a method for enabling a mobile subscriber station of a cellular radio communication network to make an Internet telephone call to an Internet user, characterised by the use of SMS to transfer, from said mobile subscriber station to a telephony/Internet server, information identifying the Internet address for said Internet user; and, from said telephony/Internet server to said mobile subscriber station, information relating to said connection between said mobile station and said Internet user. This method may be further characterised by said SMS being used to transfer the following information to said telephony/Internet server: the Internet address for an Internet-connected computer terminal of said Internet user; and a specific identity for said mobile subscriber station, for example, a telephone number for said mobile subscriber station.

The method may be characterised by said telephony/Internet server, on receipt of said SMS-transferred information, using A-number analysis to determine the A-telephone number identity of said mobile subscriber station.

The method may be characterised by said telephony/Internet server, in response to receipt of said SMS-transferred information from said mobile subscriber station, sending an SMS to said mobile subscriber station including the following information:

that call connection to said Internet user is possible; and the server's telephone number.

The method may be characterised by said mobile subscriber station calling the server's telephone number, and said server, on receipt of the call from said mobile subscriber station, identifying said mobile subscriber station (calling party), associating the telephone call with the Internet address previously transferred to said server by said mobile subscriber station, and connecting the telephone call to the Internet address. This method may be further characterised by said telephony/Internet server identifying said mobile subscriber station (calling party) using said A-number analysis.

The method may be characterised by associating said Internet address with the A-telephone number of said mobile subscriber station for a specific period of time, and by monitoring said period of time.

The method may be characterised by said telephony/Internet server connecting the telephone call either directly to the Internet address, or to the Internet address via at least one additional Internet server, a server at the end of this chain being adapted to provide Internet telephony services.

The method may be characterised by said telephony/Internet server establishing and storing a list of Internet addresses for each mobile subscriber station user wishing to make Internet telephone calls, and by each one of said Internet addresses having an address list number. This method may be further characterised by said telephony/Internet server, in response to receipt of said SMS-transferred information from said mobile subscriber station, sending an SMS to said mobile subscriber station including the following information: that call connection to said Internet user is possible, the server's telephone number, and an address list number for the Internet address, each address list number corresponding to one of the Internet addresses in the mobile subscriber station user's address list in the telephony/Internet server. This method may be further characterised by storing said address list numbers in a respective mobile subscriber station's telephone number list.

The method may be characterised by a mobile subscriber station requesting a

complete listing of the Internet address list from said telephony/Internet server.

The method may be characterised by a mobile subscriber station searching for a specific one of the Internet addresses stored by said telephony/Internet server.

The method may be characterised by said telephony/Internet server, on receipt of a call connection request from a mobile subscriber station to an unlisted Internet address, storing, and assigning an address list number to, the unlisted Internet address; and by sending back, to the mobile subscriber station, via SMS, the following information to enable a user of said mobile subscriber station to call said Internet address: the assigned address list number, the server's telephone number, and information that call connection is possible to the Internet address.

According to a third aspect of the present invention, there is provided, a method for enabling a mobile subscriber station of a cellular radio communication network to make an Internet telephone call to an Internet user, characterised by a user of said mobile subscriber station sending the following information to a telephony/Internet server using SMS: information identifying the Internet address for said Internet user, and the specific identity of said mobile subscriber station (for example, the telephone number for the mobile subscriber station); said telephony/Internet server, in response to receipt of said information, sending an SMS to said mobile subscriber station, said SMS including the following information: that connection to said Internet address is possible, and the server's telephone number; a user of said mobile subscriber station, on receipt of the SMS from the server, calling the server's telephone number; and the server, on receipt of the telephone call from the mobile subscriber station, identifying the calling party (mobile subscriber station) using, for example, A-number analysis, associating the telephone call with the Internet address previously received in the SMS from the mobile subscriber station; and connecting the telephone call to the Internet address.

According to a fourth aspect of the present invention, there is provided, a method for enabling a mobile subscriber station of a cellular radio communication network to make an Internet telephone call to an Internet user, characterised by establishing and storing a list of Internet addresses for each mobile subscriber station user wishing to

make Internet telephone calls; assigning, for each address in the Internet address list, a number which uniquely identifies these addresses; a user of said mobile subscriber station sending the following information to a telephony/Internet server using SMS: information identifying the Internet address for said Internet user, and the specific identity of said mobile subscriber station (for example, the telephone number for the mobile subscriber station); said telephony/Internet server, in response to receipt of said information, sending an SMS to said mobile subscriber station, said SMS including the following information: that connection to said Internet address is possible, the server's telephone number, and an address list number for the Internet address, each address list number corresponding to one of the Internet addresses in the mobile subscriber station user's address list in the telephony/Internet server; a user of said mobile subscriber station, on receipt of the SMS from the server, calling the server's telephone number; the telephony/Internet server, on receipt of the telephone call from the mobile subscriber station, transmitting a voice message to said mobile subscriber station requesting the user to key in an address list number; and, when said mobile subscriber station user keys in said address list number, said telephony/Internet server connecting the user of said mobile subscriber station to an Internet user at the Internet address corresponding to the address list number. This method may be further characterised by said telephony/Internet server, in the absence of a response from the Internet user, notifying the user of said mobile subscriber terminal by means of either a voice message, or tones, as in conventional telephony. This method may be further characterised by said notification being that the Internet user is engaged, or is not replying, or does not have an Internet telephony application.

The cellular radio communication network may be a GSM network.

The foregoing and other features of the present invention will be better understood from the following description with reference to the accompanying drawings, in which:

Figure 1 diagrammatically illustrates a communication system having a number of different Internet telephony arrangements; and

Figure 2 diagrammatically illustrates a communication system according to the present invention.

It will be seen from the communication system, which is diagrammatically illustrated in Figure 1 of the accompany drawings, that:

(a) PSTN subscriber telephones 1 and 2, are respectively connectd to the Internet 3 via Telephony/Internet IWU (InterWorking Unit) Servers 4 and 5; and

(b) Internet users are connected to the Internet 3 by means of a user terminal 6 which is, in essence, a computer terminal, such as a personal computer, with a display screen and having a telephone handset 7 connected thereto. The Internet user terminal 6 is connected to the Internet 3 via a modem (not illustrated) and includes appropriate Internet software for facilitating the establishment of a connection to, and interaction with, the Internet 3.

In practice, a PSTN subscriber telephone, in Figure 1, could be replaced by a GSM mobile station/handset and a GSM network, in which case, a MSC (Mobile Switching Centre) of the GSM network would be directly connected to an Internet server via 64 kbps PCM (Pulse Code Modulation).

The manner in which telephone calls are established, via the Internet 3, between the PSTN subscriber telephones 1 and 2 and/or between the Internet user terminal 6 and a PSTN subscriber telephone 1 or 2, is well known to persons skilled in the art and will not, therefore, be addressed, in great detail, by this patent specification.

In order to be able to interconnect speech to an Internet telephony user, via GSM, or conventional PSTN, it is necessary to have a coder which is adapted to re-code the PCM-coded speech data flow and to send this over the Internet. Equipment for effecting this task is readily available from a number of manufacturers. These equipments are, however. primarily based on either PSTN-to-PSTN, or Internet-to-PSTN. These models are easier to solve than a telephone call which originates in the PSTN, or GSM speech service. and terminates in the Internet.

The problem facing the GSM subscriber is how he/she is to address the Internet user without having access to an alphanumeric keyboard. The SMS service of GSM has an alphanumeric capability and can, therefore, be used for GSM/Internet telephony services.

If a B-subscriber (called party, or recipient) is PSTN-connected, the recipient's usual telephone number is specified on calling. Basically, by dialling the B-subscriber's telephone number, the Internet telephony server can connect to the Internet telephony server located nearest the B-subscriber and route the call to that server. The distant server, i.e. local to the B-subscriber, then calls the B-subscriber, and a call connection can be established.

However, if a GSM subscriber (A-subscriber, or calling party) wishes to make telephone contact with a third party (B-subscriber, or called party) who does not have a 'conventional' telephone number, but is connected to the Internet, i.e. is an Internet user, the A-subscriber must specify the recipient's (called party's) 'Web Phone Number'. This may be an Internet, or e-mail, address. It is difficult, if not impossible, to transfer this information from a GSM mobile station/handset, or from a conventional telephone, to the server. An Internet address, i.e. the IP (Internet Protocol) address, which is 12 digits long, can certainly be transferred by DTMF (Dual Tone Multifrequency). However, if the calling party only has the e-mail address, i.e. a DNS (Domain Name System) address, and not the Internet address (IP address), for an Internet user he/she wishes to call, it is difficult, if not impossible, for the calling party to establish a connection to the Internet user. Thus, in these circumstances, it will be necessary for the Internet address to be separately transferred to an Internet telephony server, and possibly also for a personal address list to be established in an Internet telephony server to which the user has a subscription. This can be effected, in accordance with the present invention, by using the GSM short message service (SMS), in a manner which will subsequently be described with reference to Figure 2 of the accompanying drawings.

It will be seen from Figure 2 of the accompanying drawings, which diagrammatically illustrates a communication system according to the present invention, that the Internet user terminal 6/telephone handset 7 combination of Figure 1 of the

accompanying drawings, is also shown in Figure 2, together with a GSM mobile station/handset 8, GSM network 9, SMS Service Centre (SC) 10 and Telephony/Internet IWU Server 11 which is connected to the GSM network 9 and the SMS SC 10. The communication system of Figure 2 is adapted to connect a telephone call, originated by the GSM mobile station 8, to a user of the Internet terminal 6 using SMS to facilitate the transfer of the Internet address for the user terminal 6.

Thus, when a GSM subscriber wishes to make an Internet telephone call, using the mobile station 8, to an Internet-connected user, i.e. the user of the Internet user terminal 6, SMS is used to transfer the Internet address information, for the Internet user, to the Internet server 11 via the SMS Service Centre 10. With such an interconnection arrangement, several different scenarios are possible.

A first one of these scenarios, which provides the simplest solution, uses the GSM short message service (SMS) to transfer:

- the Internet address information from the GSM mobile station 8 to the Telephony/Internet IWU (InterWorking Unit) server 11; and

- from the server 11 to the GSM mobile station 8, information for effecting the establishment of a telephony/Internet telephony connection between the GSM mobile station 8 and an Internet user, i.e. information which identifies the server's telephone number and which informs the GSM subscriber that a connection to the Internet user is possible.

On receipt of this information, the GSM mobile station 8 can then connect a telephone call to the server 11, which associates the telephone call with the previously sent Internet address for the Internet user. In operation, the following are sent to the interworking server 11 via SMS:

- the Internet address to the destination computer, i.e. the Internet user terminal 6 of the called party; and

– the specific identity, for example, the specific telephone number for the GSM subscriber - an A-number analysis can be used to obtain the specific identity, which is why it need not be stated in plain language in the SMS message.

The server 11 responds with an SMS - this SMS includes information that a connection to the Internet user (Internet address) is possible, together with the telephone number for the interworking server 11.

The GSM subscriber can then call the server's telephone number and, on receipt of this call, the server 11 can, via an A-number analysis (see above), associate the telephone call to the Internet address previously sent in the first SMS. In practice, the Internet address is associated with the GSM A-telephone number for a specific period of time which is monitored by a timer which forms part of the communication system. The server 11 thereafter connects the telephone call either directly to the Internet user, or indirectly via at least one additional Internet server, a server at the end of this chain being adapted to provide Internet telephony services.

It will be seen, from the foregoing description of the first interconnection scenario, that a method, according to present invention, for enabling a mobile subscriber station of a cellular radio communication network to make an Internet telephone call to an Internet user, is characterised by the steps of:

(a) a user of said mobile subscriber station sending the following information to a telephony/Internet server using SMS:

– information identifying the Internet address for said Internet user; and

– the specific identity of said mobile subscriber station (for example, the telephone number for the mobile subscriber station);

(b) said telephony/Internet server, in response to receipt of said information, sending an SMS to said mobile subscriber station, said SMS including the following information:

- that connection to the Internet address is possible; and

- the server's telephone number;

(c) a user of said mobile subscriber station, on receipt of the SMS from the server, calling the server's telephone number; and

(d) the server, on receipt of the telephone call from the mobile subscriber station:

- identifying the calling party (mobile subscriber station) using, for example, A-number analysis;

- associating the telephone call with the Internet address previously received in the SMS from the mobile subscriber station; and

- connecting the telephone call to the Internet address.

The advantages of this interconnection arrangement are that the Telephony/Internet server 11 does not need to know the identity of the GSM subscriber, and no subscription is needed.

If a GSM operator is in possession of appropriate equipment, debiting charges for the telephone can be effected, in a manner know to persons skilled in the art, without any very serious problems.

Another one of the interconnection scenarios, which is a more advanced version of the first interconnection scenario, involves the establishment of an address list in the Internet telephony server 11. In this case, the GSM subscriber will have a subscription with an Internet telephony service provider.

This, more advanced, scenario uses the same SMS, as outlined above for the first scenarios, i.e. with the Internet address being sent to the destination computer and the specific identity to the server 11. The SMS reply contains, in addition to the

telephone number to the server and information that call connection is possible, an address listing including the Internet address for the Internet user. Each address list number corresponds to one of the Internet addresses in the GSM subscriber's address list in the server. These numbers can be stored in the mobile subscriber telephone's telephone number list.

In the event that a GSM subscriber forgets a number, the SMS procedure, as outlined above, can be effected in order to obtain the Internet address list number. The subscriber can also request a complete listing of the Internet address list, or search for a specific letter.

It will be seen, from the foregoing description of the second interconnection scenario, that a method, according to present invention, for enabling a mobile subscriber station of a cellular radio communication network to make an Internet telephone call to an Internet user, is characterised by the steps of:

(a) establishing and storing a list of Internet addresses for each mobile subscriber station user wishing to make Internet telephone calls;

(b) assigning, for each address in the Internet address list, a number which uniquely identifies these addresses;

(c) a user of said mobile subscriber station sending the following information to a telephony/Internet server using SMS:

- information identifying the Internet address for said Internet user; and
- the specific identity of said mobile subscriber station (for example, the telephone number for the mobile subscriber station);

(d) said telephony/Internet server, in response to receipt of said information, sending an SMS to said mobile subscriber station, said SMS including the following information:

- that connection to the Internet address is possible;

- the server's telephone number; and

- an address list number for the Internet address, each address list number corresponding to one of the Internet addresses in the mobile subscriber station user's address list in the telephony/Internet server;

(e) a user of said mobile subscriber station, on receipt of the SMS from the server, calling the server's telephone number;

(f) the telephony/Internet server, on receipt of the telephone call from the mobile subscriber station, transmitting a voice message to said mobile subscriber station requesting the user to key in an address list number; and

- when said mobile subscriber station user keys in said address list number, said telephony/Internet server connects the user of said mobile subscriber station to an Internet user at the Internet address corresponding to the address list number; or

- said telephony/Internet server, in the absence of a response from the Internet user, notifying the user of said mobile subscriber terminal by means of either a voice message, or tones, as in conventional telephony, that the Internet user is engaged, or is not replying, or does not have an Internet telephony application.

The advantage of the second interconnection scenario is that:

- the service becomes more user-friendly; and

- a conventional telephone (not having access to an SMS facility) with a DMTF function can be used to call an Internet user if the address list number is known.

In the case of the second, or more advanced scenario, outlined above, if a GSM subscriber has 32 addresses in his/her list and wants to connect a telephone call to a new address, then the following procedure would have to be effected:

(1) The GSM subscriber sends a call connect request, together with an enquiry about the Internet address's address list number in the server 11.

SMS: <internet address> (12 digits, or e-mail address)

(2) The server 11 stores the new address in the address list and sends back, to the GSM subscriber, the address list number, telephone number, and information that coupling is possible.

SMS: coupling to <internet address> is OK! Call
<server telephone number>[pause]<address list number#>
(list number in this case would be 33#, or the first vacant one)

(3) The GSM subscriber can now call the server's telephone number. On receipt of a call from the GSM subscriber, the server transmits a voice message requesting the user (by DMTF) to key in an address list number. On some GSM-compatible mobile stations/telephones, for example, the Ericsson GH388, a DMTF string can be added to the telephone number, after a pause symbol, before the connection is made. A telephone number sent by the server in SMS would then appear as follows: 0705110646p33#.

When the GSM subscriber has dialled the number and the address list number, the server 11 establishes an Internet connection to the destination address (possibly via at least one additional Internet telephony server, as outlined above). If the Internet user does not reply, the GSM subscriber is notified via either a speech message, or tones, as in conventional telephony. A notification message may be that the Internet user:

- is engaged;

- is not replying; or

- does not have an Internet telephony application.

As an alternative to SMS, the GSM service 'Alternate Speech/Data' could be used. The advantages of this alternative are that only one call coupling is required. With this alternative arrangement, the telephone call is initiated through data transfer of the Internet address to the server 11 from the mobile station/handset 8, after which the server 11 can connect the connection to the Internet party. The GSM access then connects over the speech, and the call can take place. The disadvantage of this solution is that data terminal functionality is required, for example, a computer, or advanced GSM mobile terminal, for example, the Nokia Communicator 9000 type. Note that this is not necessary if SMS is used as data carrier.

It will be seen from the foregoing description that the present invention relates to the manner in which a GSM subscriber can connect an Internet telephone call through the IP (Internet Protocol) address information being transferred via SMS and can, therefore, be used for an Internet telephony service based on GSM's speech service access. The use of the short message service (SMS), available in a mobile telephone terminal, to transfer an Internet address, or e-mail address with alphanumeric symbols, means that no additional equipment is required, such as, for example, a portable computer, to transfer Internet telephony calls to an Internet-connected called party.

CLAIMS

1. A communication system adapted to establish connections to, and between, Internet users, characterised in that said communication system includes a cellular radio communication network adapted to provide a short message service (SMS), and a server adapted to facilitate the establishment of a telephony/Internet connection between a mobile subscriber station of said network and an Internet user, and in that said SMS is adapted to transfer:

- from said mobile subscriber station to said server, information identifying the Internet address for said Internet user; and

- from said server to said mobile subscriber station, information relating to said connection between said mobile subscriber station and said Internet user.

2. A communication system as claimed in claim 1, characterised in that said SMS is used to transfer the following information to said telephony/Internet server:

- the Internet address for an Internet-connected computer terminal of said Internet user; and

- a specific identity for said mobile subscriber station.

3. A communication system as claimed in claim 2, characterised in that said specific identity for said mobile subscriber station is a telephone number for said mobile subscriber station.

4. A communication system as claimed in claim 2, or claim 3, characterised in that said telephony/Internet server includes analysing means for effecting, on receipt of said SMS-transferred information, an A-number analysis to determine the A-telephone number identity of said mobile subscriber station.

5. A communication system as claimed in any of claims 2 to 4, characterised in that

said telephony/Internet server is adapted, in response to receipt of said SMS-transferred information from said mobile subscriber station, to send an SMS to said mobile subscriber station including the following information:

- that call connection to said Internet user is possible; and
- the server's telephone number.

6. A communication system as claimed in claim 5, characterised in that said telephony/Internet server is adapted, on receipt of a call from said mobile subscriber station, made using the server's telephone number, to:

- identify said mobile subscriber station (calling party);
- associate the telephone call with the Internet address previously transferred to said server by said mobile subscriber station; and
- connect the telephone call to the Internet address.

7. A communication system as claimed in claim 6, when appended to either claim 4, or claim 5, characterised in that said telephony/Internet server is adapted to identify said mobile subscriber station (calling party) using said A-number analysing means.

8. A communication system as claimed in claim 7, characterised in that said Internet address is associated with the A-telephone number of said mobile subscriber station for a specific period of time which is monitored by a system timer.

9. A communication system as claimed in any of claims 6 to 8, characterised in that said telephony/Internet server is adapted to connect the telephone call directly to the Internet address.

10. A communication system as claimed in any of claims 6 to 8, characterised in that said telephony/Internet server is adapted to connect the telephone call to the Internet

address via at least one additional Internet server, a server at the end of this chain being adapted to provide Internet telephony services.

11. A communication system as claimed in any preceding claim, characterised in that said telephony/Internet server includes means for establishing and storing a list of Internet addresses for each mobile subscriber station user subscribing to the system, and in that each one of said Internet addresses has an address list number.

12. A communication system as claimed in claim 11, characterised in that said telephony/Internet server is adapted, in response to receipt of said SMS-transferred information from said mobile subscriber station, to send an SMS to said mobile subscriber station including the following information:

- that call connection to said Internet user is possible;
- the server's telephone number; and
- an address list number for the Internet address, each address list number corresponding to one of the Internet addresses in the mobile subscriber station user's address list in the telephony/Internet server.

13. A communication system as claimed in claim 12, characterised in that said address list numbers are stored in a respective mobile subscriber station's telephone number list.

14. A communication system as claimed in any of claims 11 to 13, characterised in that a mobile subscriber station is adapted to request from said telephony/Internet server, and said telephony/Internet server is adapted to supply to the mobile subscriber station, a complete listing of the Internet address list.

15. A communication system as claimed in any of claims 11 to 13, characterised in that a mobile subscriber station is adapted to search for a specific one of the Internet addresses stored by said telephony/Internet server.

16. A communication system as claimed in any of claims 11 to 13, characterised in that said telephony/Internet server is adapted, on receipt of a call connection request from a mobile subscriber station to an unlisted Internet address, to:

- store, and assign an address list number to, the unlisted Internet address; and
- send back, to the mobile subscriber station, via SMS, the following information to enable a user of said mobile subscriber station to call said Internet address:
  - the assigned address list number;
  - the server's telephone number; and
  - information that call connection is possible to the Internet address.

17. A communication system as claimed in any one of the preceding claims, characterised in that said cellular radio communication network is a GSM network.

18. A method for enabling a mobile subscriber station of a cellular radio communication network to make an Internet telephone call to an Internet user, characterised by the use of SMS to transfer:

- from said mobile subscriber station to a telephony/Internet server information identifying the Internet address for said Internet user; and
- from said telephony/Internet server to said mobile subscriber station, information relating to said connection between said mobile station and said Internet user.

19. A method as claimed in claim 18, characterised by said SMS being used to transfer the following information to said telephony/Internet server:

- the Internet address for an Internet-connected computer terminal of said Internet user; and

- a specific identity for said mobile subscriber station.

20. A method as claimed in claim 19, characterised in that said specific identity of said mobile subscriber station is a telephone number for said mobile subscriber station.

21. A method as claimed in claim 19, or claim 20, characterised by said telephony/Internet server, on receipt of said SMS-transferred information, using A-number analysis to determine the A-telephone number identity of said mobile subscriber station.

22. A method as claimed in any of claims 19 to 21, characterised by said telephony/Internet server, in response to receipt of said SMS-transferred information from said mobile subscriber station, sending an SMS to said mobile subscriber station including the following information:

- that call connection to said Internet user is possible; and

- the server's telephone number.

23. A method as claimed in claim 22, characterised by:

- said mobile subscriber station calling the server's telephone number; and

- said server, on receipt of the call from said mobile subscriber station:

  - identifying said mobile subscriber station (calling party);

  - associating the telephone call with the Internet address previously transferred to said server by said mobile subscriber station; and

  - connecting the telephone call to the Internet address.

24. A method as claimed in claim 23, when appended to either claim 21, or claim 22,

characterised by said telephony/Internet server identifying said mobile subscriber station (calling party) using said A-number analysis.

25. A method as claimed in claim 24, characterised by associating said Internet address with the A-telephone number of said mobile subscriber station for a specific period of time, and by monitoring said period of time.

26. A method as claimed in any of claims 23 to 25, characterised by said telephony/Internet server connecting the telephone call directly to the Internet address.

27. A method as claimed in any of claims 23 to 25, characterised by said telephony/Internet server connecting the telephone call to the Internet address via at least one additional Internet server, a server at the end of this chain being adapted to provide Internet telephony services.

28. A method as claimed in any of claims 18 to 27, characterised by said telephony/Internet server establishing and storing a list of Internet addresses for each mobile subscriber station user wishing to make Internet telephone calls, and by each one of said Internet addresses having an address list number.

29. A method as claimed in claim 28, characterised by said telephony/Internet server, in response to receipt of said SMS-transferred information from said mobile subscriber station, sending an SMS to said mobile subscriber station including the following information:

- that call connection to said Internet user is possible;
- the server's telephone number; and
- an address list number for the Internet address, each address list number corresponding to one of the Internet addresses in the mobile subscriber station user's address list in the telephony/Internet server.

30. A method as claimed in claim 29, characterised by storing said address list numbers in a respective mobile subscriber station's telephone number list.

31. A method as claimed in any of claims 28 to 30, characterised by a mobile subscriber station requesting a complete listing of the Internet address list from said telephony/Internet server.

32. A method as claimed in any of claims 28 to 30, characterised by a mobile subscriber station searching for a specific one of the Internet addresses stored by said telephony/Internet server.

33. A method as claimed in any of claims 28 to 30, characterised by said telephony/Internet server, on receipt of a call connection request from a mobile subscriber station to an unlisted Internet address:

- storing, and assigning an address list number to, the unlisted Internet address; and

- sending back, to the mobile subscriber station, via SMS, the following information to enable a user of said mobile subscriber station to call said Internet address:

  - the assigned address list number;

  - the server's telephone number; and

  - information that call connection is possible to the Internet address.

34. A method as claimed in any one of claims 18 to 33, characterised in that said cellular radio communication network is a GSM network.

35. A method for enabling a mobile subscriber station of a cellular radio communication network to make an Internet telephone call to an Internet user, characterised by:

- a user of said mobile subscriber station sending the following information to a telephony/Internet server using SMS:
  - information identifying the Internet address for said Internet user; and
  - the specific identity of said mobile subscriber station (for example, the telephone number for the mobile subscriber station);
- said telephony/Internet server, in response to receipt of said information, sending an SMS to said mobile subscriber station, said SMS including the following information:
  - that connection to said Internet address is possible; and
  - the server's telephone number;
- a user of said mobile subscriber station, on receipt of the SMS from the server, calling the server's telephone number; and
- the server, on receipt of the telephone call from the mobile subscriber station:
  - identifying the calling party (mobile subscriber station) using, for example, A-number analysis; and
  - associating the telephone call with the Internet address previously received in the SMS from the mobile subscriber station; and
  - connecting the telephone call to the Internet address.

36. A method for enabling a mobile subscriber station of a cellular radio communication network to make an Internet telephone call to an Internet user, characterised by:

- establishing and storing a list of Internet addresses for each mobile subscriber station user wishing to make Internet telephone calls;

- assigning, for each address in the Internet address list, a number which uniquely identifies these addresses;

- a user of said mobile subscriber station sending the following information to a telephony/Internet server using SMS:

  - information identifying the Internet address for said Internet user; and

  - the specific identity of said mobile subscriber station (for example, the telephone number for the mobile subscriber station);

- said telephony/Internet server, in response to receipt of said information, sending an SMS to said mobile subscriber station, said SMS including the following information:

  - that connection to said Internet address is possible;

  - the server's telephone number; and

  - an address list number for the Internet address, each address list number corresponding to one of the Internet addresses in the mobile subscriber station user's address list in the telephony/Internet server;

- a user of said mobile subscriber station, on receipt of the SMS from the server, calling the server's telephone number;

- the telephony/Internet server, on receipt of the telephone call from the mobile subscriber station, transmitting a voice message to said mobile subscriber station requesting the user to key in an address list number; and

– when said mobile subscriber station user keys in said address list number, said telephony/Internet server connecting the user of said mobile subscriber station to an Internet user at the Internet address corresponding to the address list number.

37. A method as claimed in claim 36, characterised by said telephony/Internet server, in the absence of a response from the Internet user, notifying the user of said mobile subscriber terminal by means of either a voice message, or tones, as in conventional telephony.

38. A method as claimed in claim 37, characterised by said notification being that the Internet user is engaged, or is not replying, or does not have an Internet telephony application.

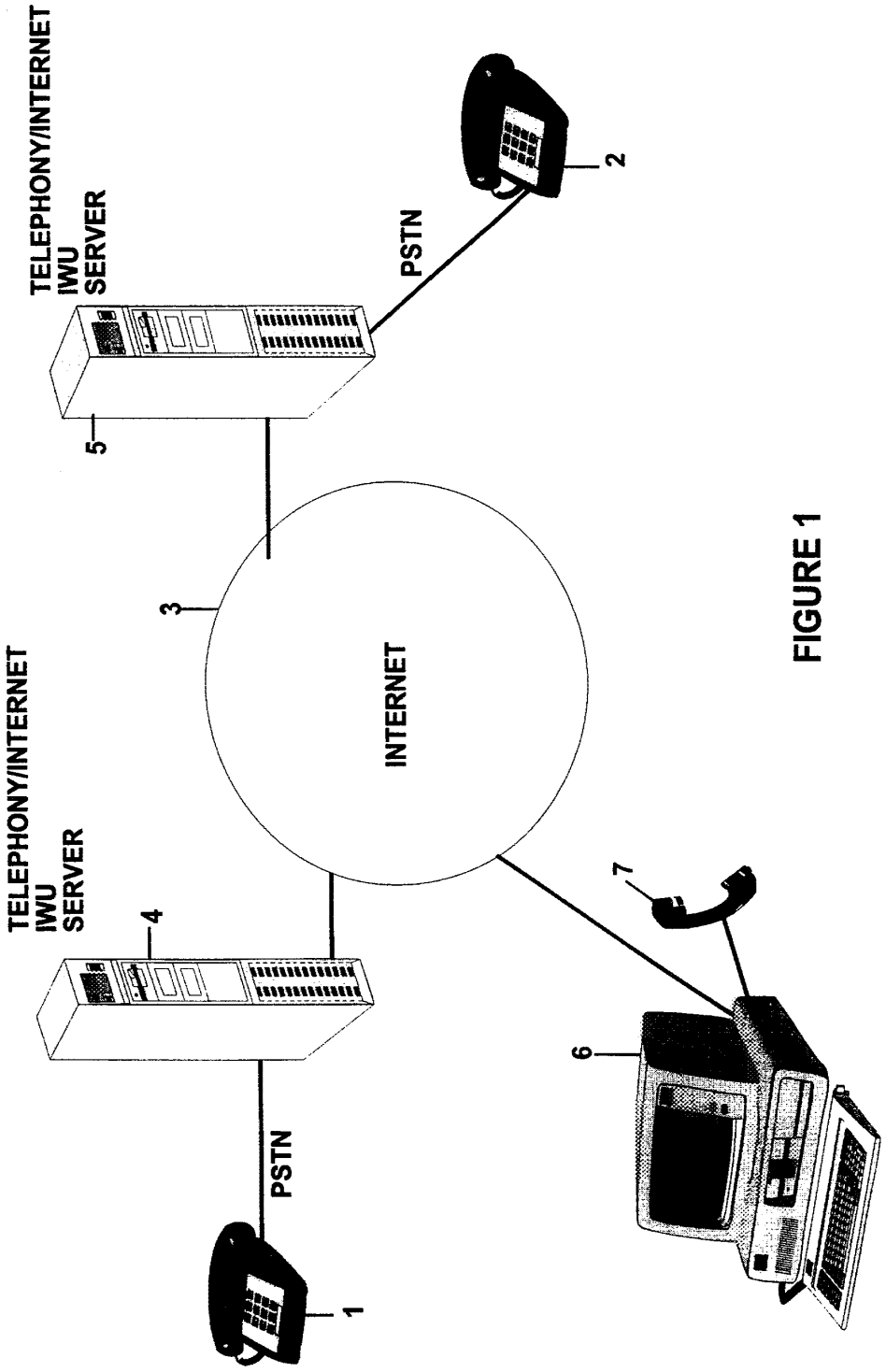
TELEPHONY/INTERNET
IWU
SERVER
PSTN
2
5
3
INTERNET
TELEPHONY/INTERNET
IWU
SERVER
4
PSTN
1
7
6

FIGURE 1

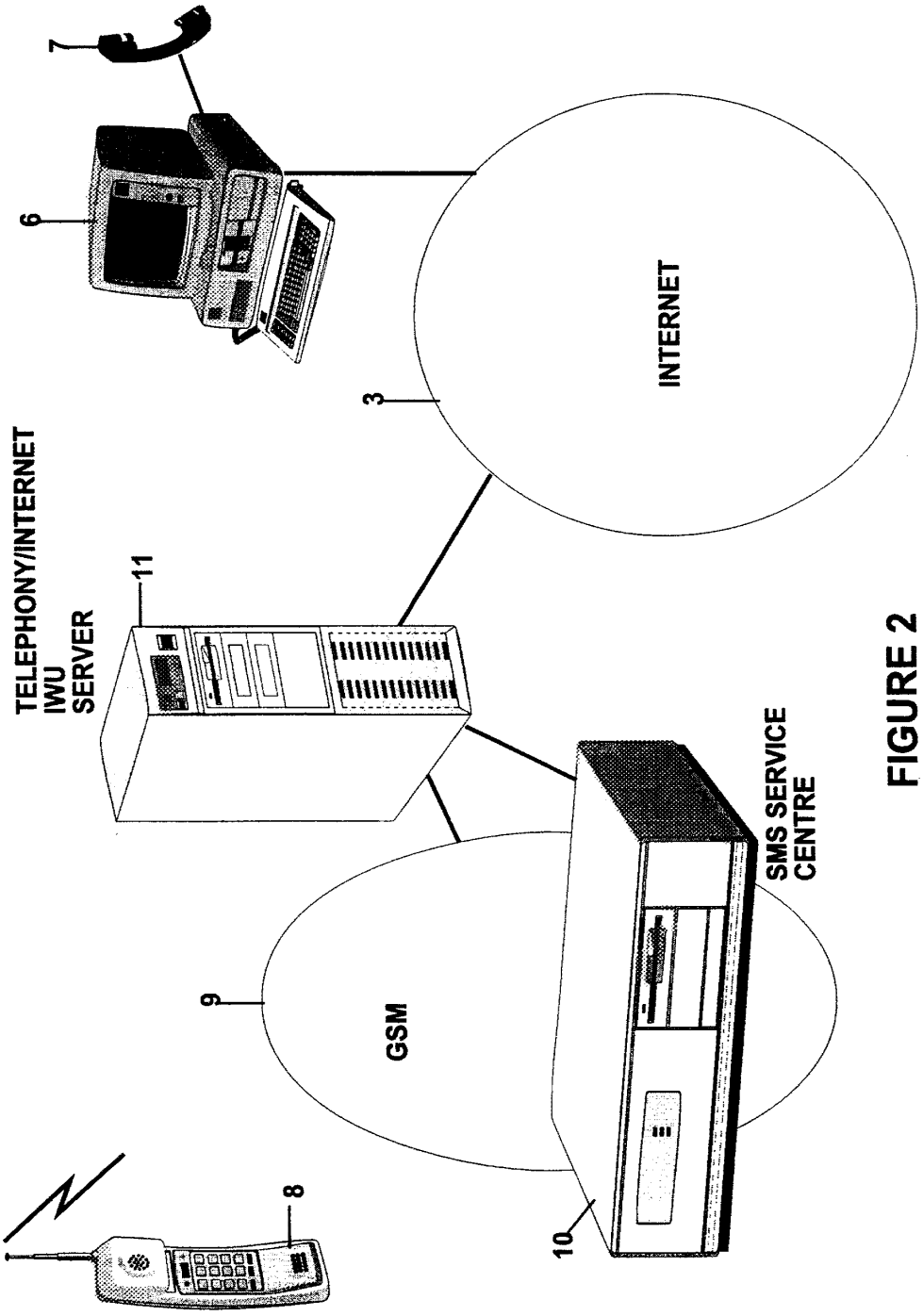
7
6
3
INTERNET
TELEPHONY/INTERNET
IWU
SERVER
11
SMS SERVICE
CENTRE
9
GSM
8
10

FIGURE 2

INTERNATIONAL SEARCH REPORT

International application No.
PCT/SE 98/01349

A. CLASSIFICATION OF SUBJECT MATTER

IPC6: H04Q 7/22, H04L 29/06, H04M 7/12 // H04M 3/50
According to International Patent Classification (IPC) or to both national classification and IPC

B. FIELDS SEARCHED

Minimum documentation searched (classification system followed by classification symbols)

IPC6: H04Q

Documentation searched other than minimum documentation to the extent that such documents are included in the fields searched

SE,DK,FI,NO classes as above

Electronic data base consulted during the international search (name of data base and, where practicable, search terms used)

C. DOCUMENTS CONSIDERED TO BE RELEVANT

Category*	Citation of document, with indication, where appropriate, of the relevant passages	Relevant to claim No.
P,X	EP 0795991 A1 (HEWLETT-PACKARD COMPANY), 17 Sept 1997 (17.09.97), see the whole document	1,18,35,36
A	WO 9731498 A2 (TELECOM FINLAND OY), 28 August 1997 (28.08.97), abstract, see the whole document	1-38
A	WO 9713382 A1 (NORTHERN TELECOM LIMITED), 10 April 1997 (10.04.97), page 2, line 21 - page 5, line 2, abstract	1-38
P,A	WO 9811744 A1 (NOKIA TELECOMMUNICATIONS OY), 19 March 1998 (19.03.98), abstract	1,18,35-36

☐ Further documents are listed in the continuation of Box C. ☒ See patent family annex.

* Special categories of cited documents:
"A" document defining the general state of the art which is not considered to be of particular relevance
"E" erlier document but published on or after the international filing date
"L" document which may throw doubts on priority claim(s) or which is cited to establish the publication date of another citation or other special reason (as specified)
"O" document referring to an oral disclosure, use, exhibition or other means
"P" document published prior to the international filing date but later than the priority date claimed
"T" later document published after the international filing date or priority date and not in conflict with the application but cited to understand the principle or theory underlying the invention
"X" document of particular relevance: the claimed invention cannot be considered novel or cannot be considered to involve an inventive step when the document is taken alone
"Y" document of particular relevance: the claimed invention cannot be considered to involve an inventive step when the document is combined with one or more other such documents, such combination being obvious to a person skilled in the art
"&" document member of the same patent family

Date of the actual completion of the international search	Date of mailing of the international search report
1 December 1998	03 -12- 1998
Name and mailing address of the ISA/ Swedish Patent Office Box 5055, S-102 42 STOCKHOLM Facsimile No. +46 8 666 02 86	Authorized officer Michel Gascoin Telephone No. +46 8 782 25 00

Form PCT/ISA/210 (second sheet) (July 1992)

INTERNATIONAL SEARCH REPORT

Information on patent family members

International application No.
PCT/SE 98/01349

Patent document cited in search report	Publication date	Patent family member(s)	Publication date
EP 0795991 A1	17/09/97	JP 10056508 A	24/02/98
WO 9731498 A2	28/08/97	AU 1797997 A	10/09/97
		FI 960760 A	21/08/97
		NO 983780 D	00/00/00
WO 9713382 A1	10/04/97	AU 6982596 A	28/04/97
		CA 2228682 A	10/04/97
		EP 0852884 A	15/07/98
WO 9811744 A1	19/03/98	AU 4304197 A	02/04/98
		EP 0861565 A	02/09/98
		FI 963659 A	17/03/98

Bright House Networks - Ex. 1008, Page 1431

PCT WORLD INTELLECTUAL PROPERTY ORGANIZATION
International Bureau

INTERNATIONAL APPLICATION PUBLISHED UNDER THE PATENT COOPERATION TREATY (PCT)

(51) International Patent Classification 6 : **H04B** | **A2**

(11) International Publication Number: **WO 99/19988**

(43) International Publication Date: 22 April 1999 (22.04.99)

(21) International Application Number: PCT/US98/19451

(22) International Filing Date: 17 September 1998 (17.09.98)

(30) Priority Data:
08/948,534 9 October 1997 (09.10.97) US

(71) Applicant: INFOGEAR TECHNOLOGY CORPORATION [US/US]; Suite 200, 2055 Woodside Road, Redwood City, CA 94061 (US).

(72) Inventors: BENDELAC, Chaim; Yekutiel Adam Street 1b, 44282 Kfar–Saba (IL). BITTMAN, Ran, M.; Hakneset Hagdola Street 20, 62917 Tel Aviv (IL). SAMBURSKI, Kobi; Ig'al Alon Street 30b, 46324 Herzliya (IL).

(74) Agents: GLENN, Michael, A. et al.; Law Offices of Michael A. Glenn, P.O. Box 7831, Menlo Park, CA 94026 (US).

(81) Designated States: AL, AU, BA, BB, BG, BR, CA, CN, CU, CZ, EE, GE, HR, HU, ID, IL, IS, JP, KP, KR, LC, LK, LR, LT, LV, MG, MK, MN, MX, NO, NZ, PL, RO, SG, SI, SK, SL, TR, TT, UA, UZ, VN, YU, ARIPO patent (GH, GM, KE, LS, MW, SD, SZ, UG, ZW), Eurasian patent (AM, AZ, BY, KG, KZ, MD, RU, TJ, TM), European patent (AT, BE, CH, CY, DE, DK, ES, FI, FR, GB, GR, IE, IT, LU, MC, NL, PT, SE), OAPI patent (BF, BJ, CF, CG, CI, CM, GA, GN, GW, ML, MR, NE, SN, TD, TG).

Published
Without international search report and to be republished upon receipt of that report.

(54) Title: METHOD AND SYSTEM FOR NETWORK ACCESS OVER A LOW BANDWIDTH LINK

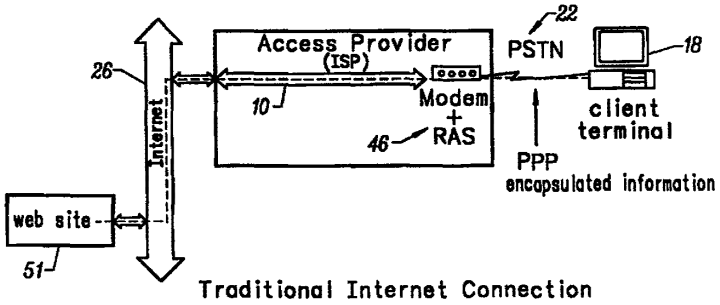

Traditional Internet Connection

(57) Abstract

A method and system are provided for transmitting information from a faster network to a data terminal via a slower network connection. The invention is adapted for use with any Internet access device or terminal, such as an Internet–compatible telephone. A client connects to the Internet via an intermediary software program, known as the Gateway (GW). In the preferred embodiment of the invention, the GW executes on a host computer of an ISP's Local Area Network (LAN). The GW thus mediates the data transfer between the Internet, such as the Web, and the client Internet terminal. The GW employs a point–to–point Internet protocol, the Gateway Interface Protocol (GWIP) to communicate with the client over the low–bandwidth link. The invention shifts the entire overhead of the Internet protocol stack to the GW, and does not involve the Internet terminal or the slow link between Internet terminal and GW. The GW makes and negotiates multiple Internet requests, in parallel, and multiplexes the resulting data streams, allowing documents to be loaded in parallel with their associated images. The GW may also be used to conveniently customize or upgrade the Internet terminal. The GW performs off–line services and caches commonly used information fetched from the Internet. The invention is also readily adapted for use with Internet access devices that require different document formats.

FOR THE PURPOSES OF INFORMATION ONLY

Codes used to identify States party to the PCT on the front pages of pamphlets publishing international applications under the PCT.

AL	Albania	**ES**	Spain	**LS**	Lesotho	**SI**	Slovenia
AM	Armenia	**FI**	Finland	**LT**	Lithuania	**SK**	Slovakia
AT	Austria	**FR**	France	**LU**	Luxembourg	**SN**	Senegal
AU	Australia	**GA**	Gabon	**LV**	Latvia	**SZ**	Swaziland
AZ	Azerbaijan	**GB**	United Kingdom	**MC**	Monaco	**TD**	Chad
BA	Bosnia and Herzegovina	**GE**	Georgia	**MD**	Republic of Moldova	**TG**	Togo
BB	Barbados	**GH**	Ghana	**MG**	Madagascar	**TJ**	Tajikistan
BE	Belgium	**GN**	Guinea	**MK**	The former Yugoslav Republic of Macedonia	**TM**	Turkmenistan
BF	Burkina Faso	**GR**	Greece			**TR**	Turkey
BG	Bulgaria	**HU**	Hungary	**ML**	Mali	**TT**	Trinidad and Tobago
BJ	Benin	**IE**	Ireland	**MN**	Mongolia	**UA**	Ukraine
BR	Brazil	**IL**	Israel	**MR**	Mauritania	**UG**	Uganda
BY	Belarus	**IS**	Iceland	**MW**	Malawi	**US**	United States of America
CA	Canada	**IT**	Italy	**MX**	Mexico	**UZ**	Uzbekistan
CF	Central African Republic	**JP**	Japan	**NE**	Niger	**VN**	Viet Nam
CG	Congo	**KE**	Kenya	**NL**	Netherlands	**YU**	Yugoslavia
CH	Switzerland	**KG**	Kyrgyzstan	**NO**	Norway	**ZW**	Zimbabwe
CI	Côte d'Ivoire	**KP**	Democratic People's Republic of Korea	**NZ**	New Zealand		
CM	Cameroon			**PL**	Poland		
CN	China	**KR**	Republic of Korea	**PT**	Portugal		
CU	Cuba	**KZ**	Kazakstan	**RO**	Romania		
CZ	Czech Republic	**LC**	Saint Lucia	**RU**	Russian Federation		
DE	Germany	**LI**	Liechtenstein	**SD**	Sudan		
DK	Denmark	**LK**	Sri Lanka	**SE**	Sweden		
EE	Estonia	**LR**	Liberia	**SG**	Singapore		

METHOD AND SYSTEM FOR NETWORK ACCESS OVER A LOW BANDWIDTH LINK

BACKGROUND OF THE INVENTION

TECHNICAL FIELD

The invention relates to data communication networks. More particularly, the invention relates to transmitting information from a faster network to a data terminal via a slow network connection.

DESCRIPTION OF THE PRIOR ART

Electronic commercial and academic computer networks have been in existence for many years. An example of a commercial network is America On-Line. The largest and best-known electronic network is commonly known as the Internet. The Internet is a world-wide "network of networks" that is composed of thousands of interconnected computers and computer networks.

The preferred protocol of communications on the Internet is a set of standards and protocols, commonly referred to as TCP/IP. These TCP/IP protocols provide the means to establish a connection between two nodes on the network, and to subsequently transfer messages and data between these nodes. TCP (Transmission Control Protocol) provides the logical connection to ensure delivery of an entire message or file, while IP (Internet Protocol) provides the routing mechanism.

The majority of residential and commercial users of such computer networks (the clients) do not have a direct connection to the network. They subscribe to the services of an access provider, commonly called "Internet Service Provider" (ISP) in the case of the Internet. Clients use a personal computer or other terminal that is equipped with a data modem, to dial into the ISP connection service.

Fig. 1 is a diagram of the topology of an Internet connection via an ISP, according to the prior art. The ISP maintains a network 10 that connects its clients to the Internet 26. This network includes the ISP backbone 12, which is an internal set of connected nodes. ISP backbones are typically connected to points of presence, known as POPs 14, and management (control) centers 16. The POP is typically the local

Bright House Networks - Ex. 1008, Page 1434

exchange that users dial into via modem. There are usually few management centers and many POPs in an ISP backbone.

The ISP typically connects to the Internet via a Local Area Network (LAN) 28 at the management center. However, the ISP host may also be connected to the Internet via a Wide Area Network (WAN) such as the X.25 style Public Data Network (PDN). The LAN communicates with the Internet 26 through a physical, wide-bandwidth connection 30. However, the client does not connect to the LAN through such wide-bandwidth connection. Rather, the client accesses the Internet by using a computer 18 with a modem 20 to dial up, through the public telephone system 22, another modem in a local POP 24. This modem-to-modem connection is a relatively slow, low bandwidth two-directional link.

The ISP usually provides a relatively slow point-to-point (serial) two-dimensional link, through which the client communicates directly to the Internet, using the Internet standard TCP/IP protocols. Such serial link transfers digital data one bit after the other. The Recommended Standard-232 (RS-232) is the standard commonly followed for serial data transmission. (See, for example, *Electronic Industries Association*, EIA Standard RS-232-C, "Interface Between Data Terminal Equipment and Data Communications Equipment Employing Serial Binary Data Interchange", August 1969.)

Point-to-point links are among the oldest methods of data communications and almost every host supports point-to-point connections. A long-distance point-to-point link is achieved by using a modem to establish a dial-up link between a display terminal, such as a personal computer, and the other host, such as a host located on the ISP site.

The communication over the serial point-to-point line is in the form of encapsulated (framed) TCP/IP datagrams (data packets) using either Serial Line Internet Protocol (SLIP) or Point-to-Point protocol (PPP) packet framing.

The SLIP protocol is described in *IETF Network Working Group (J. Romkey)*, "A NONSTANDARD FOR TRANSMISSION OF IP DATAGRAMS OVER SERIAL LINES: SLIP ," Request for Comments: 1055 - June 1988. The PPP protocol is described in *IETF Network Working Group (D. Perkins)*, "The Point-to-Point Protocol for the Transmission of Multi-Protocol Datagrams Over Point-to-Point Links," Request for Comments: 1171. SLIP transmits IP data packets over any serial link, such as a telephone line. It is generally used to provide Internet access to networks that support TCP/IP. PPP is a more common data link protocol that provides dial-up access over serial lines.

Bright House Networks - Ex. 1008, Page 1435

Fig. 2 is a diagram of a traditional Internet connection according to the prior art. To communicate on the Internet 26, an appliance or terminal (the client) 18 establishes a logical connection with a content provider. This connection is typically made using dial-up equipment, such as a modem 46 to connect to the public telephone system 22. The information transmitted over the telephone line is composed of PPP-wrapped TCP/IP data packets. Essentially, the ISP 10 is a transparent channel through which the client directly communicates with content providers, such as Web sites 51.

There are several disadvantages to this prior art approach. One major disadvantage is that of cost and complexity. Each terminal must be equipped with the ability to handle TCP/IP and PPP or SLIP protocols. This can require as much as 90 Kbytes of code and 70 Kbytes of data. Another major disadvantage is that of bandwidth. The Internet protocol overhead must be transmitted through the slow serial link, thereby reducing the actual useful bandwidth.

Yet another disadvantage is the need to duplicate, in each terminal, the code to deal with every possible type of data that may be transferred. Additionally, the established connection between the client and the Web server is recreated for every required file. This prevents a more general solution where commonly fetched files or messages are cached.

The World-Wide Web (Web) is an Internet client-server distributed information retrieval system. On the Web documents, menus, and indices are represented to the user as hypertext objects. Hypertext is a collection of documents containing cross-references or "links". These links enable the user, with the aid of an interactive browser program, to move from one document to another.

The Web may be accessed through other types of devices than a computer, including personal data assistants, fax machines, and Internet-capable telephones. One device that can provide Internet access is the terminal described in M. Valentaten, B. Moeschen, Y. Friedman, Y.-T. Sidi, Z. Blkowsky, Z. Peleg , *Multi-Mode Home Terminal System that Utilizes a Single Embedded General Purpose/DSP Processor and a Single Random Access Memory*, U.S. Patent No. 5,259,940 (October 5, 1993).

An internet access device, such as a modem-connected personal computer, generally uses a software application known as a Web browser to access the Web information available on the Internet. Such Web browsers, including Navigator, manufactured by Netscape Communications Corporation of Mountain View, California, and Mosaic, owned by the National Center for Supercomputing Applications (NCSA) at the University of Illinois, Urbana-Champaign, use a direct connection to the Web over SLIP/PPP. Thus, all of the overhead, in particular the parallel protocol overhead, is over the slow link.

Bright House Networks - Ex. 1008, Page 1436

To mitigate the above-mentioned disadvantages, prior art solutions that do not require the display terminal to handle the TCP/IP protocol set have been used to access the Internet. One such solution is for the user to acquire a shell account on the ISP host computer. With a shell account, a simple text transfer protocol and a terminal-emulator program are used to permit the user to communicate with the Internet through the display terminal, using a text-only Web browser program. One such text-only Web browser is Lynx, developed by the University of Kansas and currently maintained by Foteos Macrides at the Worcester Foundation for Biological Research. However, the shell account approach is subject to the major disadvantage that only plain-text information, and not images, colors, and sounds can be viewed.

Another prior art approach is that of the commercial Internet Web browser SlipKnot, developed by MicroMind, Inc. SlipKnot permits Web browsing through a serial link to a server, typically a Unix server, using a simple dial-in program. A TCP/IP stack is not required. When a user selects a hyperlink using SlipKnot, a textual description of the hyperlink is transferred to the ISP. SlipKnot uses the capabilities of the shell account to execute an "agent" program (such as Lynx) on the ISP machine. This agent fetches the requested multimedia file and uses a data-transfer program, such as xmodem, to transfer the file to the display terminal for display.

However, SlipKnot can be inconvenient to use and install. Furthermore, because the agent program is invoked separately for each separate request, information transfer is inefficient and slow. The SlipKnot method can handle only one request at a time and allows only local caching on the client.

It would therefore be an advantage to provide a method and system that improves the transfer of information from a faster network to a data terminal via a low-bandwidth link. It would be a further advantage if such method and system filters irrelevant Internet information prior to its transfer over the low-bandwidth link. It would be yet another advantage if such method and system reduces, if not entirely eliminates, protocol negotiation over the low-bandwidth link.

SUMMARY OF THE INVENTION

The invention provides a method and system for transmitting information from a faster network to a data terminal via a slower network connection. The preferred embodiment of the invention is adapted for use with any Internet terminal or access device, such as a telephone. A client connects to the Internet via an intermediary software program, known as the Gateway (GW). In the preferred embodiment of the

Bright House Networks - Ex. 1008, Page 1437

invention, the GW executes on a host computer of an ISP's Local Area Network (LAN.

The client dials up a Remote Access Server located at the ISP's local point-of-presence. The Remote Access Server communicates, via the ISP's backbone and using the TCP/IP network, with an authentication server. Initial authentication on the incoming calls is performed and the logical connection to the GW is established. The GW, in turn, uses the ISP's communication network and the TCP/IP protocol to connect to the Internet.

The GW thus mediates the data transfer between the Internet, such as the Web, and the client Internet terminal. The GW employs a point-to-point Internet protocol, the Gateway Interface Protocol (GWIP) to communicate with the client over the low-bandwidth link. The invention shifts the entire overhead of the Internet protocol stack to the GW, and does not involve the Internet terminal or the slow link between Internet terminal and GW. The Internet terminal needs no IP address. A single IP address is used by the GW to represent all Internet terminals.

The GW makes and negotiates multiple Internet requests, in parallel, for information to be fetched and loaded from the Internet using the GWIP protocol. The GW parses all requests and forwards them to the appropriate Internet server for execution. The GW filters each received file according to file type, and multiplexes the resulting data streams efficiently over the single link to the Internet terminal, based on the current priority of each stream. This allows documents to be loaded in parallel with their associated images, resulting in a much improved perceived speed. These streams can be paused and resumed as desired, according to a predetermined or dynamic priority. Such parallel retrieval of multiple objects is performed over the slow link without the use and overhead of Internet protocols.

The GW may also be used to conveniently customize the Internet terminal. In one embodiment of the invention, a profile of the Internet terminal user is stored in the Internet terminal. The GW uses this profile to provide customized services, such as sending only thumbnail views of images, or not sending certain material. In another embodiment of the invention, the GW serves as a software upgrade server. Using the GWIP protocol, a new firmware version can easily be uploaded, or a specialized device driver such as a printer driver uploaded as necessary. The invention may be used to upgrade or modify the graphical user interface of the Internet terminal.

In an alternative embodiment of the invention, the GW performs off-line services, such as collecting e-mail, or conducting intelligent off-line searches. The GW can be used to cache commonly used information fetched from the Internet. In

Bright House Networks - Ex. 1008, Page 1438

one embodiment of the invention, the GW is used as a mechanism for ISPs to track and bill customers for the use of the internet connection.

The invention is also readily adapted for use with Internet access devices that require different document formats and have different display capabilities, such as an Internet-compatible telephone, computer, a cellular phone, or a personal digital assistant having a wireless phone. In the preferred embodiment of the invention, the HTML layout is converted to a compressed equivalent of the HTML layout. Alternative embodiments of the invention do not convert the HTML layout, or convert the HTML to different screen formats.

BRIEF DESCRIPTION OF THE DRAWINGS

Fig. 1 is a diagram of the topology of an Internet connection via an ISP according to the prior art;

Fig. 2 is a diagram of a traditional Internet connection according to the prior art;

Fig. 3 is a diagram of the GW architecture according to the invention;

Fig. 4 is a diagram of the topology of an Internet connection via an ISP according to the invention;

Fig. 5 is a diagram showing the topology of an Internet terminal connection to the Internet according to the invention; and

Fig. 6 is a flow chart of the filtering process according to the invention.

DETAILED DESCRIPTION OF THE INVENTION

The invention provides a method and system for transmitting information from a faster network to a data terminal via a slower network connection.

The preferred embodiment of the invention is adapted for use with the Web technique described above. However, alternative embodiments of the invention are adapted for use with any Internet access device. Thus, the following discussion is provided for purposes of example and not as a limitation on the scope of the invention.

The Web is usually accessed via telephone lines by a modem-connected computer, or Internet access terminal. The client dials up an ISP, for example using the PPP protocol. In turn, the ISP host establishes the connection to the Internet.

In the invention, however, the client connects to the Internet via an intermediary software program, known as the Gateway (GW). The GW mediates the

Bright House Networks - Ex. 1008, Page 1439

data transfer between the Internet, such as the Web, and the client computer/Internet access terminal. The GW employs a point-to-point Internet protocol, the Gateway Interface Protocol (GWIP) to communicate with the client over the low-bandwidth link. The invention thereby shifts the entire overhead of the Internet protocol stack to the GW, and does not involve the Internet terminal or the slow link between Internet terminal and GW.

Fig. 3 is a diagram of the GW architecture according to the invention. The invention framework includes a GW 42 that functions as an intermediary between client devices 30, such as an Internet-compatible telephone, and content providers, such as Web sites 51. Therefore, the GW, integrated into the ISP network, mediates access to the Internet on behalf of its clients.

Fig. 4 is a diagram of the topology of an Internet connection via an ISP according to the preferred embodiment of the invention. In the invention, the Internet terminal 30 uses the public telephone system 22 to dial up a local POP 24 within the ISP backbone 12. The GW, which is integrated into the ISPs network 10, mediates access to the Internet on behalf of its clients. The GW is a seamless software addition to standard ISP network configurations.

The ISP's E-mail servers 32, authentication servers 34, network management control 36, and proxy servers 38 are typically located at a management center 16. In the preferred embodiment of the invention, the GW 42 is also located at the management center. The GW preferably executes on a host computer of the ISP's Local Area Network (LAN) 40 with other computers and servers, such as the E-mail servers, network management servers, and authentication servers. However, the GW may also be executed by a dedicated server mediating between the LAN and the client.

The client uses the Internet terminal 30 to dial and connect to a dial-up Remote Access Server 46 which is located at the ISP's local POP 24. This Remote Access Terminal Server communicates, via the ISP's backbone 12 and using the TCP/IP network 44, with an authentication server 34. Initial authentication on the incoming calls is performed and the logical connection to the GW is established. The GW, in turn, uses a router 48 to connect to the Internet 26.

Fig. 5 is a diagram showing the topology of an Internet terminal connection to the Internet according to the invention. The Internet terminal 30 uses a modem 50 to dial-up a modem 52 at the ISP's local POP. This modem can be a hardware device that is located internal or external to the Internet terminal, or can be an integrated software modem. This modem 52 transmits information from the client to the GW 42 on the LAN. The GW uses Hypertext Transfer Protocol (HTTP) and TCP/IP protocol 60 to communicate, via a datalink 54 to the Internet 26. The Internet terminal

Bright House Networks - Ex. 1008, Page 1440

displays the information retrieved from the Internet on its display screen 56 using a browser application 58.

The GW executes on a host computer with a physical, wide-bandwidth connection to the Internet. However, the client computer does not have such a wide-bandwidth connection to the Internet. Rather, the client computer must connect to the Internet through a low-bandwidth slow link.

The GW employs an extremely simple point-to-point Internet protocol, referred to hereafter as the Gateway Interface Protocol (GWIP) to communicate with the Internet terminal over this relatively slow, low-bandwidth link. The GW then negotiates Internet requests on behalf of the Internet terminal over the fast, wide-bandwidth link. The function of the GW is, therefore, to serve as an agent or representative of the Internet terminal, and to negotiate Internet access on its behalf. As a result, the entire overhead of the Internet protocol stack is handled by the GW, and does not involve the Internet terminal or the slow link between Internet terminal and GW.

A request is a signal sent from a transmitting station to a receiving station requesting permission to transmit information. This permission is given with a response. The GW examines, pre-processes and modifies (filters) the Internet terminal's Internet requests and responses to improve performance and utility. The invention is particularly useful in the context of Internet display terminals, such as the Internet-compatible telephone, having a low bandwidth connection and limited storage capabilities.

A Web page is encoded in Hypertext Markup Language (HTML). An HTML document is a plain-text (ASCII) file that uses tags to denote the various elements in the document. An element may include an attribute, which is additional information that is included between tags.

HTML can be used to link text and/or images, such as icons, to another document or section of a document. The user activates a link by clicking on it, and the linked database is directly accessed. Links are used to access related information, or to contact a person or entity. However, information on a Web page must have the requisite HTML tags to be an active link.

In the invention, the client selects a hyperlink request for a text or image file on the Web. The Internet terminal forwards the request to the GW using the GWIP protocol. If the page in question contains embedded images, the Internet terminal forwards additional, parallel requests for the images as well.

The GW simplifies the transmission of requested Internet data, as compared to the prior art. Because the GW handles the protocol negotiation with the Internet data

Bright House Networks - Ex. 1008, Page 1441

server, it does not need to be negotiated over the slow link. The design of the Internet terminal may therefore be simplified and the amount of traffic over the slow link reduced. Experimental data has shown that the GW is approximately 20% more efficient than a prior art TCP/IP stack connection over PPP.

In the preferred embodiment of the invention, the GW also pre-processes, filters and simplifies the actual data by reducing the amount information that is irrelevant to the display environment that has been identified by the GW. This information can be reduced by such methods as stripping out information, optimizing, compressing, and by generally reducing size. Fig. 6 is a flowchart of the filtering process according to the invention. The client initiates a request to the GW for information from the Internet (100). The GW either identifies (105) or is pre-programmed with a client's attributes.

The GW then negotiates the request with the Internet (110) and retrieves the requested information (115). The GW filters the Internet information by reducing the amount of information that is not relevant to the client's attributes (120). The GW then sends to the client only that information which is needed (120). Therefore, bandwidth is not wasted on irrelevant or useless information and the client's processor does not have to process the unnecessary information. The size or power of the Internet terminal processor can therefore be reduced as compared to the prior art, resulting in cost and maintenance savings to the client.

For example, extra (redundant) color information is removed from images, or is reduced according to the physical characteristics of the display. Thus, if the receiving internet access terminal has a gray scale display, there is no need to transmit the color-related information over the slow link.

The GW reduces the amount of this irrelevant information in the HTML coding of a Web page before the page is transmitted over the low bandwidth link to the client. Data pages can also be stripped of redundant blank characters, or converted to a more efficiently compressed equivalent data format. This results in improved usage of the bandwidth of the slow link. Experimental data has shown that by pre-processing, filtering, and simplifying the actual data, the GW is approximately 10% more efficient than the prior art.

The invention uses a low-power compression/ decompression scheme, such as run-length encoding (RLE). This data compression scheme converts a "run" of identical characters into a code. Using this two-dimensional run-length compression, the GW compresses data on the fly without a lot of complex looking-back or looking-ahead. Such two-dimensional run-length compression looks in both vertical and horizontal directions at any given coordinate.

Bright House Networks - Ex. 1008, Page 1442

The GW makes and negotiates multiple Internet requests, in parallel, for information to be fetched and loaded from the Internet using the GWIP protocol. The GW parses all requests and forwards them to the appropriate Internet server for execution. The GW filters each received file according to file type, and multiplexes the resulting data streams efficiently over the single link to the Internet terminal, based on the current priority of each stream. This allows documents to be loaded in parallel with their associated images, resulting in a much improved perceived speed. These streams can be paused and resumed as desired. Such parallel retrieval of multiple objects is performed over the slow link without the use and overhead of Internet protocols.

The GW may also be used to conveniently customize the Internet terminal. In one embodiment of the invention, a profile of the Internet terminal user is stored in the Internet terminal. The GW uses this profile to provide customized services, such as sending only thumbnail views of images, or not sending certain material. In another embodiment of the invention, the GW serves as a software upgrade server. Using the GWIP protocol, a new firmware version can easily be uploaded , or a specialized device driver such as a printer driver uploaded as necessary.

Furthermore, the GW may be used with the integrated graphical user interface and slide-up window described in *Method And Apparatus For Organizing And Displaying Internet And Telephone Information* , also assigned to InfoGear Technology Corp. of Redwood City, CA, filed in the U.S. Patent and Trademark Office herewith and incorporated as a part hereof. The invention may be used to upgrade or modify the integrated GUI as described in the abovementioned application.

In an alternative embodiment of the invention, the GW is used as an off-line agent. Thus, in situations where the Internet terminal is connected via a link which is not always available, as with dial-up phone lines, the GW performs off-line services, such as collecting e-mail, or conducting intelligent off-line searches.

The GW can be used to cache commonly used information. A GW that serves multiple Internet terminals can cache the information fetched from the Internet. This reduces overall network access and improves responsiveness. For example, the GW can maintain a local name-to-IP address table.

In one embodiment of the invention, the GW is used as a mechanism for ISPs to track and bill customers for the use of the internet connection. For example, the GW can keep track of charges that the user accepts for the privilege of accessing certain copyrighted material.

The GWIP protocol is a high-level (session layer), full duplex, point-to-point data transfer protocol. It is used between a single client, such as the Internet-

Bright House Networks - Ex. 1008, Page 1443

compatible telephone, and a single server running the GW. The entire GWIP protocol may be encapsulated by lower-level network transport protocols, such as V42/V42.bis, X.25, or even PPP/TCP/IP. These encapsulating protocols may add compression, encryption and reliability, as required.

GWIP assumes that the underlying transport is error free. It is optimized to allow efficient asynchronous data transfer over a serial sequential medium, such as a relatively slow serial modem line.

The GWIP protocol consists of small data packets, typically about 250 bytes, which provide the capability for multiple interleaved data streams in both directions. There is no concept of "embedded," "escaped," or "out-of-band" control characters; all control information is in the form of complete GWIP packets. The GWIP described below is optimized for use with an Internet-compatible telephone. However, one skilled in the art will readily appreciate that the GWIP may be adapted to other Internet terminals, including different types of Internet-compatible telephones.

Table 1 describes the GWIP protocol structure. All GWIP packets start with a DLE character, followed by a byte, designated "len," with the length of the rest of the packet. The DLE character is a non-printable character that is used to indicate a beginning of a message. This convention provides a small measure of error-detecting redundancy over a normally error-free transport layer.

DLE	*len*	*t*	*data*

TABLE 1

The third byte of a GWIP packet ("*t* " in Table 1, above) always indicates the packet type. Additional data fields are optional. The packet type determines the packet destination and structure. Multiple-byte integer values are transmitted in network byte order (MOST significant byte first).

In most cases, the Internet terminal issues a request (a GWIP command), to which the GW responds by issuing one or more GWIP response packets. A request is always associated with a new stream. A stream comprises multiple packets that are logically associated via a common stream handle. A handle is an unsigned integer between 0 and 254 (255 is reserved). Responses use the same handle as the original request. Streams are sometimes also known as virtual channels. The GW may also issue spontaneous status and service messages that are related to one of the open streams.

Bright House Networks - Ex. 1008, Page 1444

A connection between the Internet terminal and the GW host (server) is always initiated by the client. As soon as a data connection is established, a configuration dependent exchange takes place between the Internet terminal and the GW host. This results in the establishment of a logical link between the Internet terminal and the GW software.

At this point, the GW waits for a special sequence of four bytes, that indicates the version of the GWIP protocol supported by the Internet terminal. The structure of this sequence is shown in Table 2, as follows:

DLE	*major*	minor	ETX

TABLE 2

The first byte of the sequence is the DLE character and the second byte is a (positive) major version number. The third byte is the minor version number, and the fourth byte the ETX character. ETX is a non-printable character that is frequently used to indicate the end of a message.

The discussion in this application describes an exemplary version of the GWIP protocol specification. One skilled in the art will readily recognize that other versions of the GWIP may be implemented in the invention. Thus, the following discussion is provided for purposes of example and not as a limitation on the scope of the invention.

The GW ignores all bytes that precede this version sequence. When it receives a valid version sequence, it returns a STAT_OK GW_STATUS packet (see below) to the Internet terminal and prepares to handle a regular GWIP session. The Internet terminal repeats the version sequence at, for example, 5-second intervals, until it receives the GW_STATUS packet. The Internet terminal disconnects if no valid response is received after three attempts. This disconnection resets the GW.

Unless specified differently, the word "command" indicates a packet that originates from the Internet terminal terminal; the word "response" refers to a GW initiated packet. types. Most GWIP packet types are used both as commands and response, but may have different formats.

Some commands, such as GW_LOGIN, GW_CONFIG and GW_ANCHOR, have additional command fields. Table 3 shows the GW_LOGIN command. Command fields are pairs of the field "name" (a one byte enumerator), followed by the field "value." Each command field is preceded by a one-byte length field, indicating the total length of the command field.

Bright House Networks - Ex. 1008, Page 1445

DLE	*len*	type	authentication fields

TABLE 3

Every GWIP session starts with a GW_LOGIN Internet terminal command. This authenticates the Internet terminal. The authentication includes the fields listed in Table 4:

field	na`me	value length (bytes)
Internet terminal serial ID (unique)	LOG_SERID	4
boot-section/Internet terminal version id	LOG_BOOTVER	4
firmware version id	LOG_FIRMVER	4
user name (id)	LOG_USER	string
password	LOG_PASSWD	string
Ö. .		

TABLE 4

The GW replies with a GW_STATUS response message, with a status STAT_OK, followed by an optional GW_SERVICE message. Any other response, or no response at all, causes the Internet terminal to disconnect.

The only valid commands after GW_LOGIN are GW_CONFIG, GW_LOGOUT, and GW_UPGRADE. The GW_LOGOUT command packet is shown in Table 5.

DLE	*len*	type

TABLE 5

The proper way for an Internet terminal to terminate a session is to send a GW_LOGOUT command, and then to wait for the GW_LOGOUT response. A session may also end as a

Bright House Networks - Ex. 1008, Page 1446

result of the Internet terminal disconnecting deliberately, or as a result of a communication fault or other error.

The GW_LOGOUT response to the Internet terminal GW_LOGOUT command is shown in Table 6. The log out message is optional. After receiving the GW_LOGOUT response, the Internet terminal disconnects from the line.

DLE	*len*	type	logout msg

TABLE 6

A GW_CONFIG command is sent by the Internet terminal to the GW immediately after the GW_LOGIN command. The GW_CONFIG command may be repeated at any time after the GW_LOGIN command. GW_CONFIG informs the GW about the user's preference/configuration table, including the language in which service messages must be sent, image preference options, and time out values. All values must be valid. The GW_CONFIG command is shown in Table 7.

DLE	*len*	type	PI_type	configuration fields

TABLE 7

The one-byte PI_type field determines the plug-in or GW sub-system that is concerned with these configuration values. Typically, the Internet terminal will send a number of GW_CONFIG commands, one for each type of sub-system or plug-in, whenever the configuration on the Internet terminal is changed by the user. Accepted values for this field include PI_EMAIL, PI_WEB and PI_GEN. The configuration fields listed in Table 8 are defined:

Bright House Networks - Ex. 1008, Page 1447

field	name	value length(bytes)	used by
font size	CONFIG_FONT	1	PI_GEN
image display method	CONFIG_IMG	1	PI_WEB
max image size to receive	CONFIG_MAX_IMG_SIZE	2	PI_WEB
cache refresh options	CONFIG_CACHE	4	PI_GEN
time out preference	CONFIG_TIMEOUT	4	PI_GEN
language	CONFIG_LANG	1	PI_GEN
date& time style	CONFIG_DATE	1	PI_GEN
email user id	CONFIG_EUSER	string	PI_EMAIL
email password	CONFIG_EPASSWD	string	PI_EMAIL
Ö.			

TABLE 8

The GW responds with a GW_CONFIG response to confirm receipt of the GW_CONFIG command. The Internet terminal does not issue any other type of commands before it receives the GW_CONFIG response. The GW_CONFIG command is thus a synchronization point between the Internet terminal and the GW.

A GW_ANCHOR command is an Internet terminal request for a new hypertext/image file. In an HTML document, the anchor is the format codes that are used to define a link to another page. The handle (*h*) field identifies the data stream and relates the request with subsequent GW response packets. The 2-byte "width" field indicates the width of the pane, in pixels, in which the information will be displayed. This command packet is followed by one or more GW_DATA packets that include the anchor Uniform Resource Locator (URL), and is terminated by a GW_EOF packet. The GW responds with a GW_ANCHOR response, followed by GW_DATA packets, terminated by GW_EOF. The GW_ANCHOR command is given in Table 9.

Bright House Networks - Ex. 1008, Page 1448

DLE	*len*	type	h	width

TABLE 9

A GW_REFRESH command is an Internet terminal request for the re-transmission of a hypertext/image document that is partially or fully in the Internet terminal cache. The handle (*h*) field identifies the data stream and relates the request with subsequent GW response packets. The 2-byte "width" field indicates the width of the pane, in pixels, in which the information will be displayed. THe GW_REFRESH command is shown in Table 10.

DLE	*len*	type	h	width	skip-len	creation date

TABLE 10

The 2-byte "skip-len" field indicates how many data bytes must be skipped by the GW before sending the actual data. This is useful if a file was partially received and cached by the Internet terminal in a previous transmission, and does not need to be fully re-transmitted.

The 6-byte "creation date" field indicates the creation date of the currently cached document. This command packet is followed by one or more GW_DATA packets that include the anchor URL, and is terminated by a GW_EOF packet.

The GW responds with a GW_ANCHOR response. If the file in the cache is up-to-date, the AN_CACHE_VALIDITY field of the GW_ANCHOR header will indicate that the cache is up-to-date (CACHE_VALID). Otherwise, the AN_CONTENT field will be CACHE_REPLACE or CACHE_DONT, and the value of skip-len will be ignored and the entire file will be re-transmitted. The GW_ANCHOR response will be followed by zero or more appropriate GW_DATA packets, and terminated by a GW_EOF.

A GW_POST command is a form-request, transmitted via the HTTP POST method. The handle (*h*) field identifies the data stream and optionally relates the request with GW response packets. The GW responds with a GW_ANCHOR response, with a AN_CACHE_VALIDITY field of value CACHE_DONT, followed by GW_DATA packets. Responses to GW_POST are never cached. This command packet is followed by one or more GW_DATA packets that include the anchor URL and the posted text, and is terminated by a GW_EOF packet. The GW_POST command is given in Table 11.

Bright House Networks - Ex. 1008, Page 1449

DLE	*len*	type	h	width

TABLE 11

The GW indicates its intention to send the requested GW_ANCHOR or GW-POST information by responding with a GW_ANCHOR response. A relatively long time may pass between the GW_ANCHOR or GW_POST command and the GW_ANCHOR response, due to network delays. The header information may include the creation data/time, content type, compression and display method. The GW_ANCHOR response is given in Table 12.

DLE	*len*	type	h	hdr info fields

TABLE 12

The following anchor fields are defined:

field	name	value length (bytes)
creation time-stamp	AN_CREATION	4 (time_t)
cache validity	AN_CACHE VALIDITY	1
content type	AN_CONTENT	1
Ö.		

TABLE 13

The GW then follows this with a sequence of GW_DATA response packets, terminated by a GW_EOF response. (Also see GW_ACK, described below). if a file cannot be retrieved, or if there is an unreasonably long time-out, the Internet terminal will usually cancel the GW_ANCHOR request via a GW_ENDSTREAM command.

GW_DATA packets are used to send data streams, such as bitmap data, from the Internet terminal to the GW, or vice-versa. Each GW_DATA packet contains a handle that relates this packet to the specific stream. Data streams are terminated by a GW_EOF packet.

Bright House Networks - Ex. 1008, Page 1450

An informational percent byte, with a value between 1 and 100, indicates an estimated percentage of how much has been transmitted, including the package. A percent of 0% indicates that the sender does not know, or does not care to compute, the estimated percentage. The GW_DATA packet is given in Table 14.

DLE	*len*	type	h	%	data...

TABLE 14

The Internet terminal acknowledges each received data-packet of type GW_DATA by sending a GW_ACK command. This allows the GW to send another packet, without overflowing the Internet terminal input buffers, and prevents unwanted data from piling up in internal UNIX (host) serial driver and modem buffers. The Internet terminal may also, at regular time intervals, send GW_ACK commands to the GW to indicate that it is alive. GW_DATA packets sent by the Internet terminal to the GW are not acknowledged by the GW. The GW_ACK command is shown in Table 15.

DLE	*len*	type	h

TABLE 15

The GW_PRI command is provided to the GW to recommend the priority order for the transmission of packets of concurrent existing streams. The priority is provided in "pri," a one-byte non-negative value. The GW does not echo these commands. Initially, a stream is of priority ten. The GW_PRI command is given in Table 16.

DLE	*len*	type	h	*pri*

TABLE 16

A priority of zero indicates that the stream is out of sight, This is usually true for images, when the user scrolls the screen. The GW sends data of all higher priority data streams first, in round-robin fashion, and only then sends data packets for lower priority streams. In the preferred embodiment of the invention, the values zero and ten only are used. However, alternative embodiments of the invention may use any appropriate priority values.

Bright House Networks - Ex. 1008, Page 1451

While the Web uses HTML coding for documents, the invention is also readily adapted for use with Internet access devices that require different document formats. In the preferred embodiment of the invention, the HTML layout is converted to an equivalent of the HTML layout. Alternative embodiments of the invention do not convert the HTML layout, or convert the HTML to different browser formats. For example, an HTML page can be converted into formats accessible by a Web telephone, a cellular phone, or a personal digital assistant having a wireless phone.

The layout conversion is performed, for example, by the server, client, Internet-capable telephone, Internet access device, or by a computer networked to the Internet-capable telephone or Internet access device. Further, such conversion may be an HTML-to-HTML conversion, for example as provided by a plug-in that operates in a connection with a conventional Web browser, such as Navigator, manufactured by Netscape Communications Corporation of Mountain View, California.

One embodiment of the invention is upgradeable via downloading from the Web. The HTML coding may thereby be readily modified to provide new features, update existing features, or to comply with different protocols. This HTML is then translated, as necessary.

The telephone numbers on a displayed Web page may be iconified and dialed, for example, as described in *Method And Apparatus For Iconifying And Automatically Dialing Telephone Numbers Which Appear On A Web Page*, also assigned to InfoGear Technology Corp. of Redwood City, CA, filed in the U.S. Patent and Trademark Office herewith and incorporated as a part hereof. These iconified telephone numbers may be added to an address book maintained as part of the invention.

Although the invention is described herein with reference to the preferred embodiment, one skilled in the art will readily appreciate that other applications may be substituted for those set forth herein without departing from the spirit and scope of the present invention.

For example, while the Preferred embodiment of the invention is adapted for use with a serial link, the teachings of the invention are readily applicable to any type of slow link.

Accordingly, the invention should only be limited by the Claims included below.

Bright House Networks - Ex. 1008, Page 1452

CLAIMS

1. A method for accessing network information during a communications session, comprising the steps of:

accessing a host via a slow link using an Internet terminal;

the host negotiating an Internet connection on behalf of said Internet terminal with a software application integrated into said host; and

said software application using an interface protocol to transfer data from said Internet connection to and from said internet terminal, thereby mediating data transfer between the Internet and said Internet terminal.

2. The method of Claim 1, further comprising the step of said software application filtering said Internet data from said Internet connection to reduce the amount of data that is irrelevant to said Internet terminal's attributes.

3. The method of Claim 1, further comprising the step of said software application stripping redundant characters from said Internet data.

4. The method of Claim 1, further comprising the step of said software application converting said Internet data to a compressed equivalent data format.

5. The method of Claim 1, further comprising the steps of:

said software application using said interface protocol to make and negotiate multiple Internet requests, in parallel;

said software application parsing and forwarding said requests to an Internet server for execution;

said software application filtering data received from the Internet in response to said request and according to file type; and

said software application multiplexing said filtered data over said slow link to said Internet terminal.

6. The method of Claim 1, further comprising the steps of:

said Internet terminal storing a profile of a user of said Internet terminal; and

said software application using said profile to customize said Internet data sent to said internet terminal.

Bright House Networks - Ex. 1008, Page 1453

7. The method of Claim 1, further comprising the step of said software application using said interface protocol to upload data to upgrade said Internet terminal.

8. The method of Claim 1, wherein said software application is an off-line agent for said Internet terminal.

9. The method of Claim 1, further comprising the step of said software application caching information commonly used by said Internet terminal.

10. The method of Claim 1, further comprising the step of said software application tracking charges accruing to said Internet terminal as a result of said Internet connection.

11. The method of Claim 1, wherein said Internet terminal is an Internet-compatible telephone.

12. A method for accessing network information during a communications session, comprising the steps of:

accessing a host via a slow link using an Internet terminal;

a software application integrated into said host negotiating an Internet connection on behalf of said internet terminal;

said software application using an interface protocol to transfer data from said Internet connection to and from said Internet terminal;

said software application using said interface protocol to make and negotiate multiple Internet requests, in parallel;

said software application parsing and forwarding said requests to an Internet server for execution;

said software application filtering data received from the Internet in response to said request according to file type;

said software application reducing the amount of said Internet data that is irrelevant to said Internet terminal's attributes; and

said software application multiplexing said filtered data over said slow link to said Internet terminal.

13. The method of Claim 12, further comprising the steps of:

said Internet terminal storing a profile of a user of said Internet terminal; and

said software application using said profile to customize said Internet data sent to said Internet terminal.

Bright House Networks - Ex. 1008, Page 1454

14. The method of Claim 12, further comprising the step of said software application using said interface protocol to upload data to upgrade said Internet terminal.

15. The method of Claim 12, wherein said software application is an off-line agent for said Internet terminal.

16. The method of Claim 12, further comprising the step of said software application caching information commonly used by said Internet terminal.

17. The method of Claim 12, further comprising the step of said software application tracking charges accruing to said user of said Internet terminal as a result of said Internet connection.

18. The method of Claim 12, further comprising the step of said software application stripping redundant characters from said Internet data.

19. The method of Claim 12, further comprising the step of said software application converting said Internet data to a compressed equivalent data format.

20. The method of Claim 12, wherein said Internet terminal is an Internet-compatible telephone.

21. A system for accessing network information during a communications session, comprising:

an Internet terminal for accessing a host via a slow link;and

a software application integrated into said host for negotiating an Internet connection on behalf of said Internet terminal;

wherein said software application uses an interface protocol to transfer data from said Internet connection to and from said Internet terminal.

22. The system of Claim 21, further comprising a filtering module in said software application for filtering said Internet data from said Internet connection to strip out data that is irrelevant to said Internet appliance's attributes.

23. The system of Claim 21, further comprising a stripping module in said software application for stripping redundant characters from said Internet data.

Bright House Networks - Ex. 1008, Page 1455

24. The system of Claim 21, further comprising a compression module in said software application for converting said Internet data to a compressed equivalent data format.

25. The system of Claim 21, further comprising:

a parallel request module in said software application for using said interface protocol to make and negotiate multiple Internet requests, in parallel;

a parsing module in said software application for parsing and forwarding said requests to an Internet server for execution;

a file type module in said software application for filtering data received from the Internet in response to said request according to file type; and

a multiplexer module in said software application for multiplexing said filtered data over said slow link to said Internet terminal.

26. The system of Claim 21, further comprising:

a storage module in said Internet terminal for storing a profile of a user of said Internet terminal; and

a customizing module in said software application for using said profile to customize said Internet data sent to said Internet terminal.

27. The system of Claim 21, further comprising an upgrade module in said software application for using said interface protocol to upload data to upgrade said Internet terminal.

28. The system of Claim 21, wherein said software application is an off-line agent for said Internet terminal.

29. The system of Claim 21, further comprising a cache in said software application for caching information commonly used by said Internet terminal.

30. The system of Claim 21, further comprising a tracking module in said software application for tracking charges accruing to said client as a result of said Internet connection.

31. The system of Claim 21, further comprising a stripping module in said software application for stripping redundant characters from said Internet data.

32. The system of Claim 21, further comprising a compression module in said software application for converting said Internet data to a compressed equivalent data format.

Bright House Networks - Ex. 1008, Page 1456

33. The system of Claim 21, wherein said Internet terminal is an Internet-compatible telephone.

34. An access terminal, comprising:

an Internet-compatible telephone for receiving and displaying a Web page; and

a software module integrated into an Internet Service Provider for connecting said Internet-compatible telephone to the Internet;

wherein said software module mediates data transfer between the Internet and said Internet-compatible telephone.

Bright House Networks - Ex. 1008, Page 1457

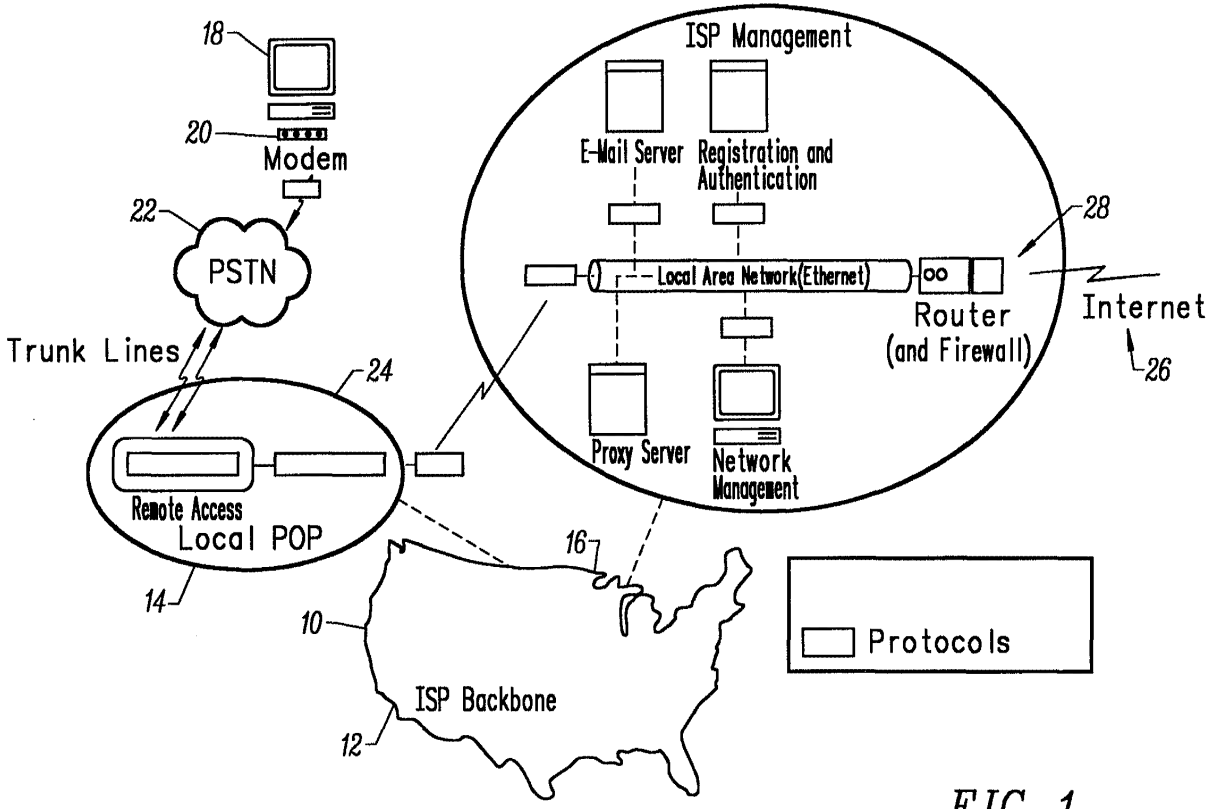

FIG. 1
(PRIOR ART)

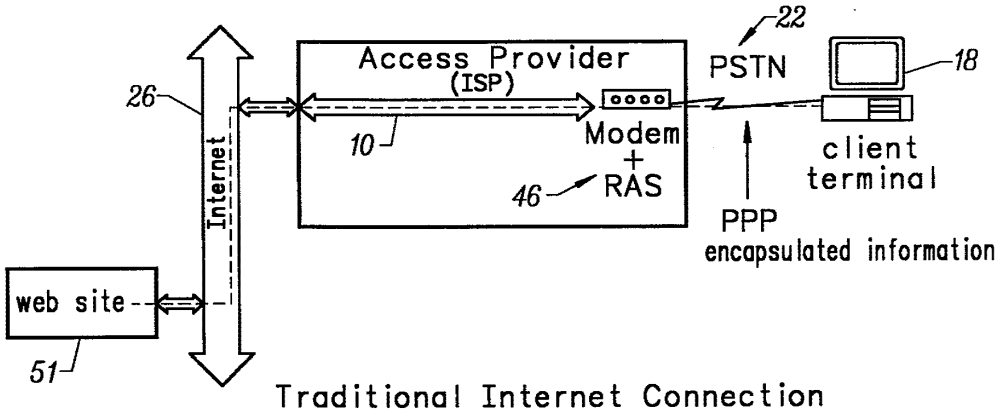

FIG. 2
(PRIOR ART)

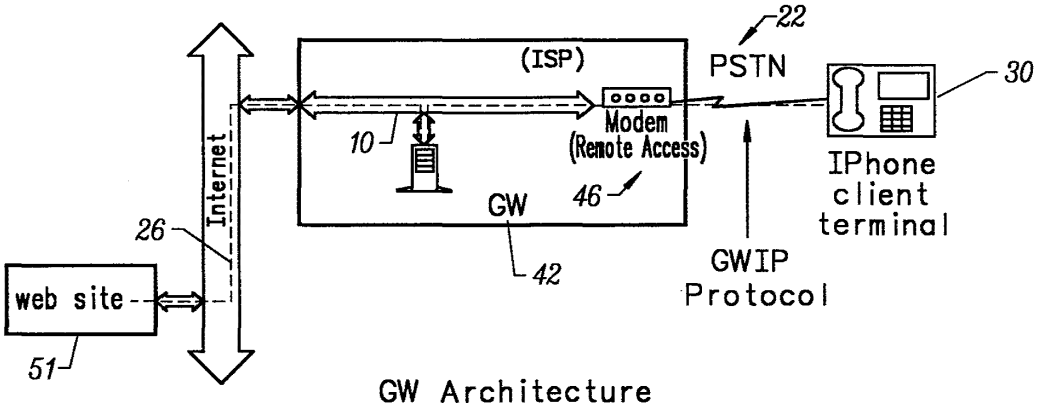
22
(ISP)
PSTN
30
Modem
(Remote Access)
10
46
IPhone
client
terminal
Internet
GW
26
42
GWIP
Protocol
web site
51
GW Architecture

FIG. 3

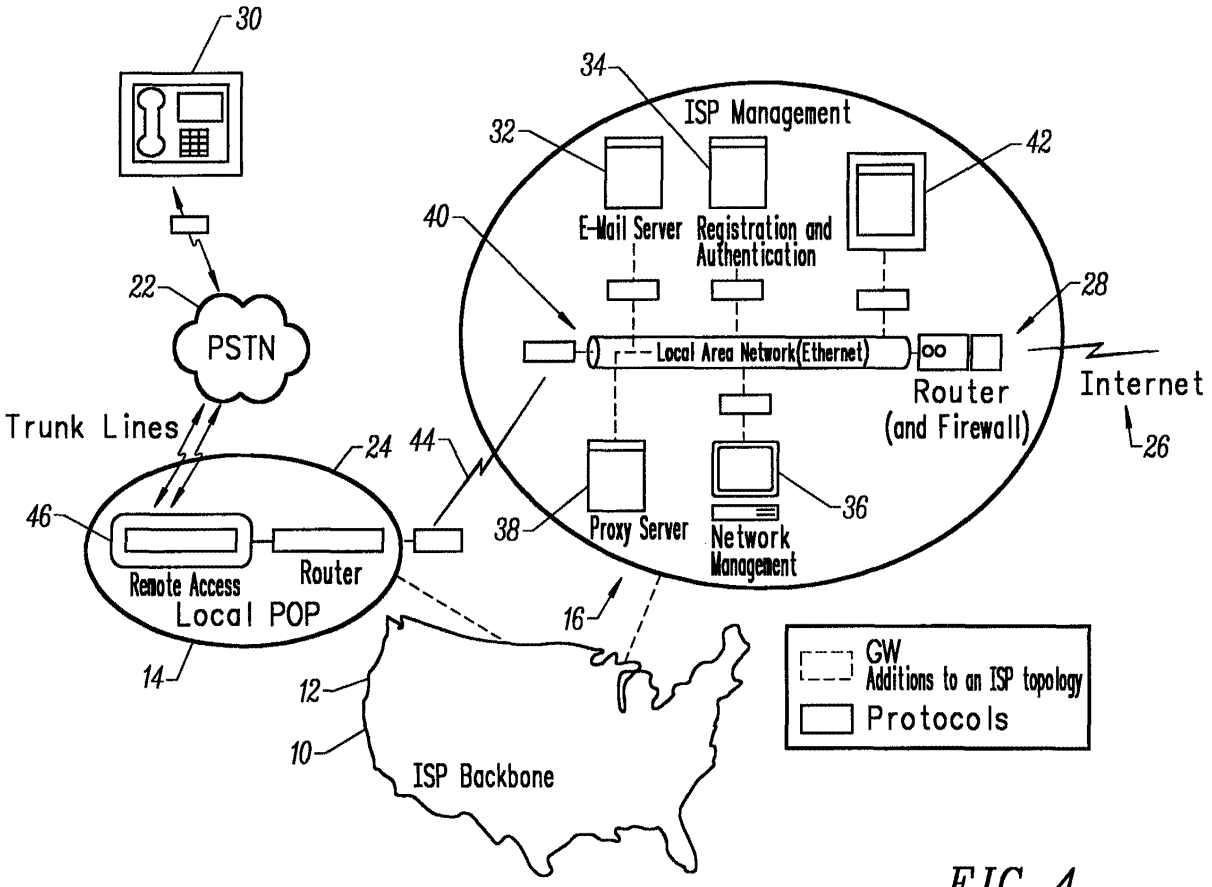

FIG. 4

Bright House Networks - Ex. 1008, Page 1461

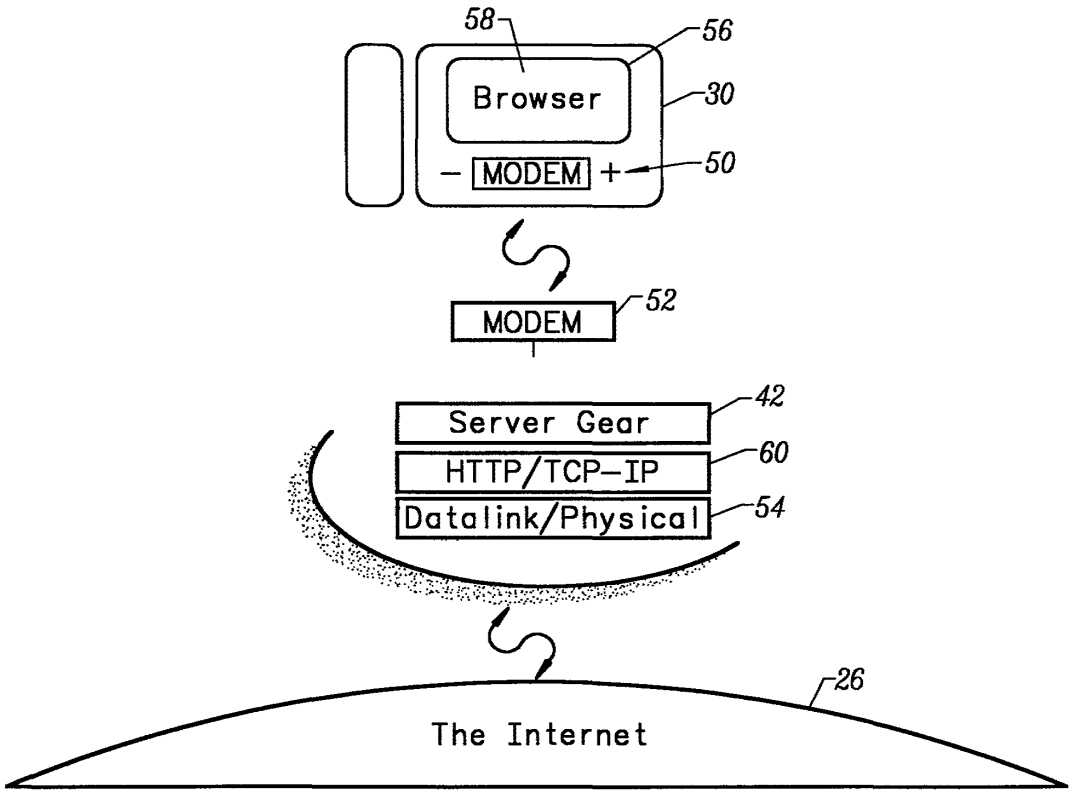
58
56
Browser
30
– MODEM +
50
MODEM
52
Server Gear
42
HTTP/TCP–IP
60
Datalink/Physical
54
26
The Internet

FIG. 5

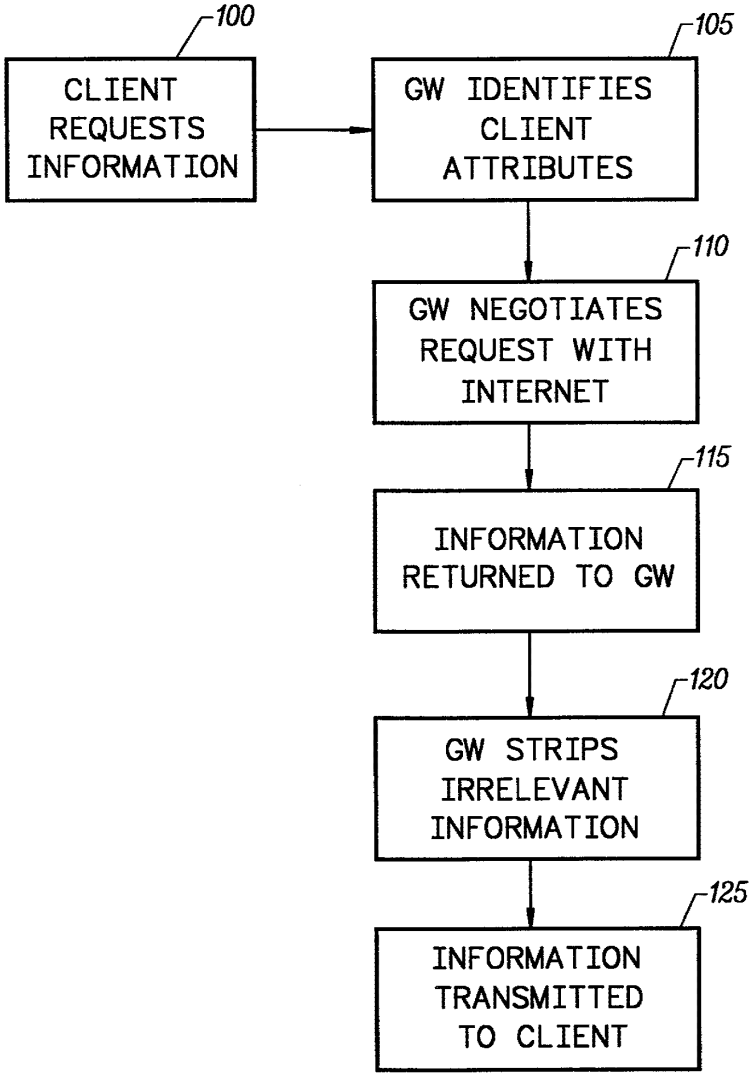
100
CLIENT REQUESTS INFORMATION
105
GW IDENTIFIES CLIENT ATTRIBUTES
110
GW NEGOTIATES REQUEST WITH INTERNET
115
INFORMATION RETURNED TO GW
120
GW STRIPS IRRELEVANT INFORMATION
125
INFORMATION TRANSMITTED TO CLIENT

FIG. 6

PCT WORLD INTELLECTUAL PROPERTY ORGANIZATION
International Bureau

INTERNATIONAL APPLICATION PUBLISHED UNDER THE PATENT COOPERATION TREATY (PCT)

(51) International Patent Classification 6 : **H04L 29/06** | **A3**

(11) International Publication Number: **WO 99/19988**

(43) International Publication Date: 22 April 1999 (22.04.99)

(21) International Application Number: PCT/US98/19451

(22) International Filing Date: 17 September 1998 (17.09.98)

(30) Priority Data:
08/948,534 9 October 1997 (09.10.97) US

(71) Applicant: INFOGEAR TECHNOLOGY CORPORATION [US/US]; Suite 200, 2055 Woodside Road, Redwood City, CA 94061 (US).

(72) Inventors: BENDELAC, Chaim; Yekutiel Adam Street 1b, 44282 Kfar–Saba (IL). BITTMAN, Ran, M.; Hakneset Hagdola Street 20, 62917 Tel Aviv (IL). SAMBURSKI, Kobi; Ig'al Alon Street 30b, 46324 Herzliya (IL).

(74) Agents: GLENN, Michael, A. et al.; Law Offices of Michael A. Glenn, P.O. Box 7831, Menlo Park, CA 94026 (US).

(81) Designated States: AL, AU, BA, BB, BG, BR, CA, CN, CU, CZ, EE, GE, HR, HU, ID, IL, IS, JP, KP, KR, LC, LK, LR, LT, LV, MG, MK, MN, MX, NO, NZ, PL, RO, SG, SI, SK, SL, TR, TT, UA, UZ, VN, YU, ARIPO patent (GH, GM, KE, LS, MW, SD, SZ, UG, ZW), Eurasian patent (AM, AZ, BY, KG, KZ, MD, RU, TJ, TM), European patent (AT, BE, CH, CY, DE, DK, ES, FI, FR, GB, GR, IE, IT, LU, MC, NL, PT, SE), OAPI patent (BF, BJ, CF, CG, CI, CM, GA, GN, GW, ML, MR, NE, SN, TD, TG).

Published
With international search report.
Before the expiration of the time limit for amending the claims and to be republished in the event of the receipt of amendments.

(88) Date of publication of the international search report:
10 September 1999 (10.09.99)

(54) Title: METHOD AND SYSTEM FOR NETWORK ACCESS OVER A LOW BANDWIDTH LINK

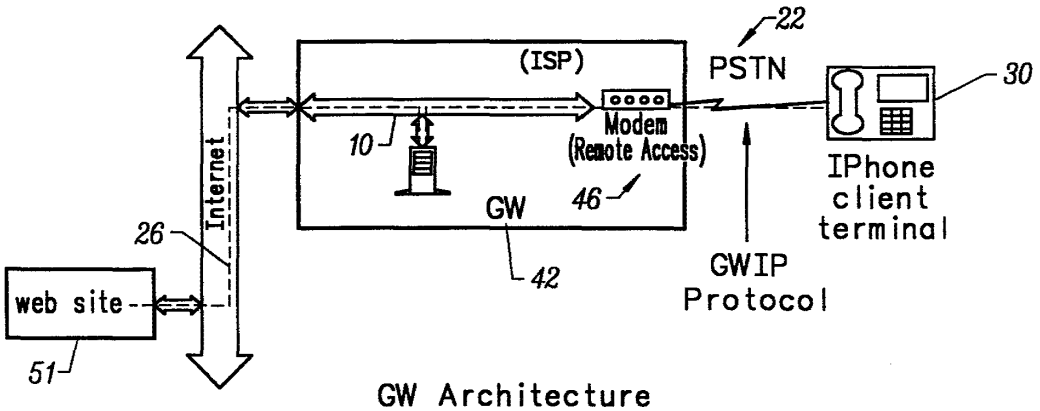

GW Architecture

(57) Abstract

A method and system are provided for transmitting information from a faster network to a data terminal via a slower network connection. The invention is adapted for use with any Internet access device or terminal, such as an Internet–compatible telephone. A client connects to the Internet via an intermediary software program, known as the Gateway (GW). In the preferred embodiment of the invention, the GW executes on a host computer of an ISP's Local Area Network (LAN). The GW thus mediates the data transfer between the Internet, such as the Web, and the client Internet terminal. The GW employs a point–to–point Internet protocol, the Gateway Interface Protocol (GWIP) to communicate with the client over the low–bandwidth link. The invention shifts the entire overhead of the Internet protocol stack to the GW, and does not involve the Internet terminal or the slow link between Internet terminal and GW. The GW makes and negotiates multiple Internet requests, in parallel, and multiplexes the resulting data streams, allowing documents to be loaded in parallel with their associated images. The GW may also be used to conveniently customize or upgrade the Internet terminal. The GW performs off–line services and caches commonly used information fetched from the Internet. The invention is also readily adapted for use with Internet access devices that require different document formats.

FOR THE PURPOSES OF INFORMATION ONLY

Codes used to identify States party to the PCT on the front pages of pamphlets publishing international applications under the PCT.

AL	Albania	**ES**	Spain	**LS**	Lesotho	**SI**	Slovenia
AM	Armenia	**FI**	Finland	**LT**	Lithuania	**SK**	Slovakia
AT	Austria	**FR**	France	**LU**	Luxembourg	**SN**	Senegal
AU	Australia	**GA**	Gabon	**LV**	Latvia	**SZ**	Swaziland
AZ	Azerbaijan	**GB**	United Kingdom	**MC**	Monaco	**TD**	Chad
BA	Bosnia and Herzegovina	**GE**	Georgia	**MD**	Republic of Moldova	**TG**	Togo
BB	Barbados	**GH**	Ghana	**MG**	Madagascar	**TJ**	Tajikistan
BE	Belgium	**GN**	Guinea	**MK**	The former Yugoslav Republic of Macedonia	**TM**	Turkmenistan
BF	Burkina Faso	**GR**	Greece			**TR**	Turkey
BG	Bulgaria	**HU**	Hungary	**ML**	Mali	**TT**	Trinidad and Tobago
BJ	Benin	**IE**	Ireland	**MN**	Mongolia	**UA**	Ukraine
BR	Brazil	**IL**	Israel	**MR**	Mauritania	**UG**	Uganda
BY	Belarus	**IS**	Iceland	**MW**	Malawi	**US**	United States of America
CA	Canada	**IT**	Italy	**MX**	Mexico	**UZ**	Uzbekistan
CF	Central African Republic	**JP**	Japan	**NE**	Niger	**VN**	Viet Nam
CG	Congo	**KE**	Kenya	**NL**	Netherlands	**YU**	Yugoslavia
CH	Switzerland	**KG**	Kyrgyzstan	**NO**	Norway	**ZW**	Zimbabwe
CI	Côte d'Ivoire	**KP**	Democratic People's Republic of Korea	**NZ**	New Zealand		
CM	Cameroon			**PL**	Poland		
CN	China	**KR**	Republic of Korea	**PT**	Portugal		
CU	Cuba	**KZ**	Kazakstan	**RO**	Romania		
CZ	Czech Republic	**LC**	Saint Lucia	**RU**	Russian Federation		
DE	Germany	**LI**	Liechtenstein	**SD**	Sudan		
DK	Denmark	**LK**	Sri Lanka	**SE**	Sweden		
EE	Estonia	**LR**	Liberia	**SG**	Singapore		

INTERNATIONAL SEARCH REPORT

International Application No
PCT/US 98/19451

A. CLASSIFICATION OF SUBJECT MATTER
IPC 6 H04L29/06

According to International Patent Classification (IPC) or to both national classification and IPC

B. FIELDS SEARCHED

Minimum documentation searched (classification system followed by classification symbols)
IPC 6 H04L

Documentation searched other than minimum documentation to the extent that such documents are included in the fields searched

Electronic data base consulted during the international search (name of data base and, where practical, search terms used)

C. DOCUMENTS CONSIDERED TO BE RELEVANT

Category °	Citation of document, with indication, where appropriate, of the relevant passages	Relevant to claim No.
X	EP 0 797 342 A (SONY CORP) 24 September 1997	1,2,11, 21,22, 33,34
Y	see abstract see page 2, line 5 - page 3, line 28 see page 4, line 10 - page 5, line 1 see page 5, line 15-27 see page 6, line 36-50 see page 7, line 21 - page 8, line 18 see page 8, line 48 - page 9, line 46 see page 10, line 46 - page 11, line 16 see figures 1,4,5,7,8,13 --- -/--	3,4,23, 24,31,32

[X] Further documents are listed in the continuation of box C.

[X] Patent family members are listed in annex.

° Special categories of cited documents :

"A" document defining the general state of the art which is not considered to be of particular relevance

"E" earlier document but published on or after the international filing date

"L" document which may throw doubts on priority claim(s) or which is cited to establish the publication date of another citation or other special reason (as specified)

"O" document referring to an oral disclosure, use, exhibition or other means

"P" document published prior to the international filing date but later than the priority date claimed

"T" later document published after the international filing date or priority date and not in conflict with the application but cited to understand the principle or theory underlying the invention

"X" document of particular relevance; the claimed invention cannot be considered novel or cannot be considered to involve an inventive step when the document is taken alone

"Y" document of particular relevance; the claimed invention cannot be considered to involve an inventive step when the document is combined with one or more other such documents, such combination being obvious to a person skilled in the art.

"&" document member of the same patent family

Date of the actual completion of the international search	Date of mailing of the international search report
24 February 1999	23.07.99

Name and mailing address of the ISA	Authorized officer
European Patent Office, P.B. 5818 Patentlaan 2 NL - 2280 HV Rijswijk Tel. (+31-70) 340-2040, Tx. 31 651 epo nl, Fax: (+31-70) 340-3016	Lievens, K

3

Form PCT/ISA/210 (second sheet) (July 1992)

Bright House Networks - Ex. 1008, Page 1466

INTERNATIONAL SEARCH REPORT

International Application No
PCT/US 98/19451

C.(Continuation) DOCUMENTS CONSIDERED TO BE RELEVANT

Category °	Citation of document, with indication, where appropriate, of the relevant passages	Relevant to claim No.
Y	US 4 971 407 A (HOFFMAN PHILIP M) 20 November 1990 see column 1, line 8 - column 5, line 52 see column 13, line 60 - column 14, line 14 ---	3,4,23, 24,31,32
X	AJAY BAKRE ET AL: "I-TCP: INDIRECT TCP FOR MOBILE HOSTS" PROCEEDINGS OF THE INTERNATIONAL CONFERENCE ON DISTRIBUTED COMPUTIN SYSTEMS, VANCOUVER, MAY 30 - JUNE 2, 1995, no. CONF. 15, 30 May 1995, INSTITUTE OF ELECTRICAL AND ELECTRONICS ENGINEERS, pages 136-143, XP000530804 see abstract see page 136, right-hand column, line 1-26 see page 137, left-hand column, line 17 - page 138, right-hand column, line 20 -----	1,21

3

Form PCT/ISA/210 (continuation of second sheet) (July 1992)

Bright House Networks - Ex. 1008, Page 1467

INTERNATIONAL SEARCH REPORT

Inte...ational application No.
PCT/US 98/19451

Box I Observations where certain claims were found unsearchable (Continuation of item 1 of first sheet)

This International Search Report has not been established in respect of certain claims under Article 17(2)(a) for the following reasons:

1. ☐ Claims Nos.:
because they relate to subject matter not required to be searched by this Authority, namely:

2. ☐ Claims Nos.:
because they relate to parts of the International Application that do not comply with the prescribed requirements to such an extent that no meaningful International Search can be carried out, specifically:

3. ☐ Claims Nos.:
because they are dependent claims and are not drafted in accordance with the second and third sentences of Rule 6.4(a).

Box II Observations where unity of invention is lacking (Continuation of item 2 of first sheet)

This International Searching Authority found multiple inventions in this international application, as follows:

see additional sheet

1. ☐ As all required additional search fees were timely paid by the applicant, this International Search Report covers all searchable claims.

2. ☐ As all searchable claims could be searched without effort justifying an additional fee, this Authority did not invite payment of any additional fee.

3. ☐ As only some of the required additional search fees were timely paid by the applicant, this International Search Report covers only those claims for which fees were paid, specifically claims Nos.:

4. ☒ No required additional search fees were timely paid by the applicant. Consequently, this International Search Report is restricted to the invention first mentioned in the claims; it is covered by claims Nos.:

1-4,11,21-24,31-33,34

Remark on Protest

☐ The additional search fees were accompanied by the applicant's protest.

☐ No protest accompanied the payment of additional search fees.

Bright House Networks - Ex. 1008, Page 1468

FURTHER INFORMATION CONTINUED FROM PCT/ISA/ 210

1. Claims: 1-4,11,21-24,31-33,34

   Method and system for compressing data.

2. Claims: 1,5,12-20,21,25

   Method and system for handling multiple Internet requests in parallel.

3. Claims: 1,6,21,26

   Method and system for storing a user profile for customising Internet data.

4. Claims: 1,7,21,27

   Method and system for upgrading the Internet terminal.

5. Claims: 1,8,21,28

   Method and system for off-line processing.

6. Claims: 1,9,21,29

   Method and apparatus for caching commonly used information.

7. Claims: 1,10,21,30

   Method and apparatus for keeping track of charges.

INTERNATIONAL SEARCH REPORT

Information on patent family members

International Application No
PCT/US 98/19451

Patent document cited in search report	Publication date	Patent family member(s)	Publication date
EP 0797342 A	24-09-1997	CN 1172568 A	04-02-1998
		WO 9714244 A	17-04-1997
US 4971407 A	20-11-1990	CA 2037044 A,C	10-02-1991
		DE 69024629 D	15-02-1996
		DE 69024629 T	15-05-1996
		EP 0439569 A	07-08-1991
		JP 4501349 T	05-03-1992
		WO 9102412 A	21-02-1991

Form PCT/ISA/210 (patent family annex) (July 1992)

PCT WORLD INTELLECTUAL PROPERTY ORGANIZATION
International Bureau

INTERNATIONAL APPLICATION PUBLISHED UNDER THE PATENT COOPERATION TREATY (PCT)

(51) International Patent Classification 6 : **H04L 29/06**	**A3**	**(11) International Publication Number:** **WO 99/19988** **(43) International Publication Date:** 22 April 1999 (22.04.99)

(21) International Application Number: PCT/US98/19451

(22) International Filing Date: 17 September 1998 (17.09.98)

(30) Priority Data:
08/948,534 9 October 1997 (09.10.97) US

(71) Applicant: INFOGEAR TECHNOLOGY CORPORATION [US/US]; Suite 200, 2055 Woodside Road, Redwood City, CA 94061 (US).

(72) Inventors: BENDELAC, Chaim; Yekutiel Adam Street 1b, 44282 Kfar–Saba (IL). BITTMAN, Ran, M.; Hakneset Hagdola Street 20, 62917 Tel Aviv (IL). SAMBURSKI, Kobi; Ig'al Alon Street 30b, 46324 Herzliya (IL).

(74) Agents: GLENN, Michael, A. et al.; Law Offices of Michael A. Glenn, P.O. Box 7831, Menlo Park, CA 94026 (US).

(81) Designated States: AL, AU, BA, BB, BG, BR, CA, CN, CU, CZ, EE, GE, HR, HU, ID, IL, IS, JP, KP, KR, LC, LK, LR, LT, LV, MG, MK, MN, MX, NO, NZ, PL, RO, SG, SI, SK, SL, TR, TT, UA, UZ, VN, YU, ARIPO patent (GH, GM, KE, LS, MW, SD, SZ, UG, ZW), Eurasian patent (AM, AZ, BY, KG, KZ, MD, RU, TJ, TM), European patent (AT, BE, CH, CY, DE, DK, ES, FI, FR, GB, GR, IE, IT, LU, MC, NL, PT, SE), OAPI patent (BF, BJ, CF, CG, CI, CM, GA, GN, GW, ML, MR, NE, SN, TD, TG).

Published
With international search report.
With amended claims.

(88) Date of publication of the international search report:
10 September 1999 (10.09.99)

Date of publication of the amended claims:
21 October 1999 (21.10.99)

(54) Title: METHOD AND SYSTEM FOR NETWORK ACCESS OVER A LOW BANDWIDTH LINK

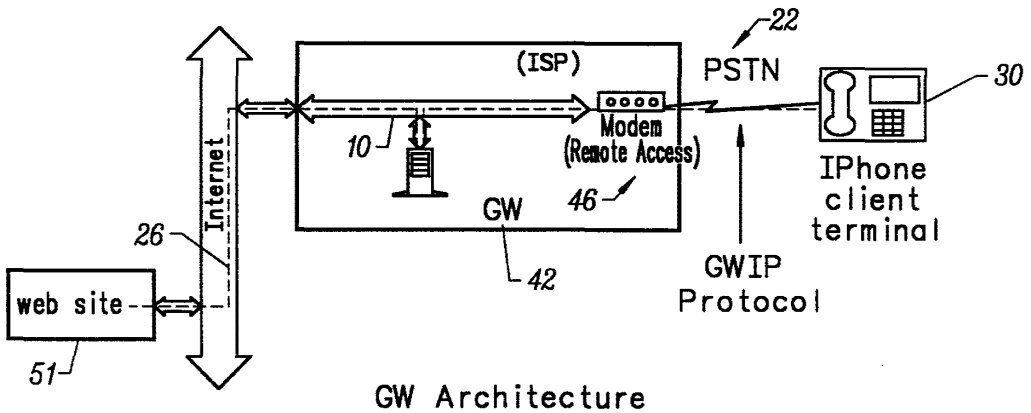

GW Architecture

(57) Abstract

A method and system are provided for transmitting information from a faster network to a data terminal via a slower network connection. The invention is adapted for use with any Internet access device or terminal, such as an Internet–compatible telephone. A client connects to the Internet via an intermediary software program, known as the Gateway (GW). In the preferred embodiment of the invention, the GW executes on a host computer of an ISP's Local Area Network (LAN). The GW thus mediates the data transfer between the Internet, such as the Web, and the client Internet terminal. The GW employs a point–to–point Internet protocol, the Gateway Interface Protocol (GWIP) to communicate with the client over the low–bandwidth link. The invention shifts the entire overhead of the Internet protocol stack to the GW, and does not involve the Internet terminal or the slow link between Internet terminal and GW. The GW makes and negotiates multiple Internet requests, in parallel, and multiplexes the resulting data streams, allowing documents to be loaded in parallel with their associated images. The GW may also be used to conveniently customize or upgrade the Internet terminal. The GW performs off–line services and caches commonly used information fetched from the Internet. The invention is also readily adapted for use with Internet access devices that require different document formats.

FOR THE PURPOSES OF INFORMATION ONLY

Codes used to identify States party to the PCT on the front pages of pamphlets publishing international applications under the PCT.

AL	Albania	**ES**	Spain	**LS**	Lesotho	**SI**	Slovenia
AM	Armenia	**FI**	Finland	**LT**	Lithuania	**SK**	Slovakia
AT	Austria	**FR**	France	**LU**	Luxembourg	**SN**	Senegal
AU	Australia	**GA**	Gabon	**LV**	Latvia	**SZ**	Swaziland
AZ	Azerbaijan	**GB**	United Kingdom	**MC**	Monaco	**TD**	Chad
BA	Bosnia and Herzegovina	**GE**	Georgia	**MD**	Republic of Moldova	**TG**	Togo
BB	Barbados	**GH**	Ghana	**MG**	Madagascar	**TJ**	Tajikistan
BE	Belgium	**GN**	Guinea	**MK**	The former Yugoslav Republic of Macedonia	**TM**	Turkmenistan
BF	Burkina Faso	**GR**	Greece			**TR**	Turkey
BG	Bulgaria	**HU**	Hungary	**ML**	Mali	**TT**	Trinidad and Tobago
BJ	Benin	**IE**	Ireland	**MN**	Mongolia	**UA**	Ukraine
BR	Brazil	**IL**	Israel	**MR**	Mauritania	**UG**	Uganda
BY	Belarus	**IS**	Iceland	**MW**	Malawi	**US**	United States of America
CA	Canada	**IT**	Italy	**MX**	Mexico	**UZ**	Uzbekistan
CF	Central African Republic	**JP**	Japan	**NE**	Niger	**VN**	Viet Nam
CG	Congo	**KE**	Kenya	**NL**	Netherlands	**YU**	Yugoslavia
CH	Switzerland	**KG**	Kyrgyzstan	**NO**	Norway	**ZW**	Zimbabwe
CI	Côte d'Ivoire	**KP**	Democratic People's Republic of Korea	**NZ**	New Zealand		
CM	Cameroon			**PL**	Poland		
CN	China	**KR**	Republic of Korea	**PT**	Portugal		
CU	Cuba	**KZ**	Kazakstan	**RO**	Romania		
CZ	Czech Republic	**LC**	Saint Lucia	**RU**	Russian Federation		
DE	Germany	**LI**	Liechtenstein	**SD**	Sudan		
DK	Denmark	**LK**	Sri Lanka	**SE**	Sweden		
EE	Estonia	**LR**	Liberia	**SG**	Singapore		

AMENDED CLAIMS

[received by the International Bureau on 24 August 1999 (24.08.99);
original claims 1-34 replaced by amended claims 1-25 (4 pages)]

1. A method for accessing network information during a communications session, comprising the steps of:

accessing a host via a slow link using an Internet terminal;

the host negotiating an Internet connection on behalf of said Internet terminal with a software application integrated into said host;

said software application using an interface protocol to transfer data from said Internet connection to and from said internet terminal, thereby mediating data transfer between the Internet and said Internet terminal;

said software application filtering said Internet data from said Internet connection to reduce the amount of data that is irrelevant to said Internet terminal's attributes;

said software application stripping redundant characters from said Internet data; and

said software application converting said Internet data to a compressed equivalent data format.

2. The method of Claim 1, further comprising the steps of:

said software application using said interface protocol to make and negotiate multiple Internet requests, in parallel;

said software application parsing and forwarding said requests to an Internet server for execution;

said software application filtering data received from the Internet in response to said request and according to file type; and

said software application multiplexing said filtered data over said slow link to said Internet terminal.

3. The method of Claim 1, further comprising the steps of:

said Internet terminal storing a profile of a user of said Internet terminal; and

said software application using said profile to customize said Internet data sent to said internet terminal.

4. The method of Claim 1, further comprising the step of said software application using said interface protocol to upload data to upgrade said Internet terminal.

5. The method of Claim 1, wherein said software application is an off-line agent for said Internet terminal.

Bright House Networks - Ex. 1008, Page 1473

6. The method of Claim 1, further comprising the step of said software application caching information commonly used by said Internet terminal.

7. The method of Claim 1, further comprising the step of said software application tracking charges accruing to said Internet terminal as a result of said Internet connection.

8. The method of Claim 1, wherein said Internet terminal is an Internet-compatible telephone.

9. A method for accessing network information during a communications session, comprising the steps of:

accessing a host via a slow link using an Internet terminal;

a software application integrated into said host negotiating an Internet connection on behalf of said internet terminal;

said software application using an interface protocol to transfer data from said Internet connection to and from said Internet terminal;

said software application using said interface protocol to make and negotiate multiple Internet requests, in parallel;

said software application parsing and forwarding said requests to an Internet server for execution;

said software application filtering data received from the Internet in response to said request according to file type;

said software application reducing the amount of said Internet data that is irrelevant to said Internet terminal's attributes;

said software application multiplexing said filtered data over said slow link to said Internet terminal;

said software application stripping redundant characters from said Internet data; and

said software application converting said Internet data to a compressed equivalent data format.

10. The method of Claim 9, further comprising the steps of:

said Internet terminal storing a profile of a user of said Internet terminal; and

said software application using said profile to customize said Internet data sent to said Internet terminal.

Bright House Networks - Ex. 1008, Page 1474

11. The meth of Claim 9, further comprising the step of s. software application using said interface protocol to upload data to upgrade said Internet terminal.

12. The method of Claim 9, wherein said software application is an off-line agent for said Internet terminal.

13. The method of Claim 9, further comprising the step of said software application caching information commonly used by said Internet terminal.

14. The method of Claim 9, further comprising the step of said software application tracking charges accruing to said user of said Internet terminal as a result of said Internet connection.

15. The method of Claim 9, wherein said Internet terminal is an Internet-compatible telephone.

16. A system for accessing network information during a communications session, comprising:

an Internet terminal for accessing a host via a slow link;and

a software application integrated into said host for negotiating an Internet connection on behalf of said Internet terminal;

wherein said software application uses an interface protocol to transfer data from said Internet connection to and from said Internet terminal;

a stripping module in said software application for stripping redundant characters from said Internet data; and

a compression module in said software application for converting said Internet data to a compressed equivalent data format.

17. The system of Claim 16, further comprising a filtering module in said software application for filtering said Internet data from said Internet connection to strip out data that is irrelevant to said Internet appliance's attributes.

18. The system of Claim 16, further comprising:

a parallel request module in said software application for using said interface protocol to make and negotiate multiple Internet requests, in parallel;

a parsing module in said software application for parsing and forwarding said requests to an Internet server for execution;

Bright House Networks - Ex. 1008, Page 1475

a file type module in said software application for filtering data received from the Internet in response to said request according to file type; and

a multiplexer module in said software application for multiplexing said filtered data over said slow link to said Internet terminal.

19. The system of Claim 16, further comprising:

a storage module in said Internet terminal for storing a profile of a user of said Internet terminal; and

a customizing module in said software application for using said profile to customize said Internet data sent to said Internet terminal.

20. The system of Claim 16, further comprising an upgrade module in said software application for using said interface protocol to upload data to upgrade said Internet terminal.

21. The system of Claim 16, wherein said software application is an off-line agent for said Internet terminal.

22. The system of Claim 16, further comprising a cache in said software application for caching information commonly used by said Internet terminal.

23. The system of Claim 16, further comprising a tracking module in said software application for tracking charges accruing to said client as a result of said Internet connection.

24. The system of Claim 16, wherein said Internet terminal is an Internet-compatible telephone.

25. An access terminal, comprising:

an Internet-compatible telephone for receiving and displaying a Web page;

a software application integrated into an Internet Service Provider for connecting said Internet-compatible telephone to the Internet;

wherein said software application mediates data transfer between the Internet and said Internet-compatible telephone;

a stripping module in said software application for stripping redundant characters from said Internet data; and

a compression module in said software application for converting said Internet data to a compressed equivalent data format.

Bright House Networks - Ex. 1008, Page 1476

PCT WORLD INTELLECTUAL PROPERTY ORGANIZATION
International Bureau

INTERNATIONAL APPLICATION PUBLISHED UNDER THE PATENT COOPERATION TREATY (PCT)

(51) International Patent Classification 6 : **H04Q 3/00** — **A1**

(11) International Publication Number: **WO 99/20059**

(43) International Publication Date: 22 April 1999 (22.04.99)

(21) International Application Number: PCT/US98/21058

(22) International Filing Date: 6 October 1998 (06.10.98)

(30) Priority Data:
08/948,161 9 October 1997 (09.10.97) US

(71) Applicant: ALCATEL USA SOURCING, L.P. [US/US]; 1000 Coit Road, Plano, TX 75075 (US).

(72) Inventors: SHAH, Tasvir; 9004 Silverdollar Trail, Irving, TX 75063 (US). HARRISON, Mark, A.; Asian Info Computer Networks (Beijing) Co., Lt d., 14th floor, 5 Minuzuxueyuan South Road, P.O. Box 8116, Section 47, Haidan District, Beijing 10081 (CN). BILBO, Matthew, J.; 2524 Lakeview Drive, Bedford, TX 76021 (US).

(74) Agent: FISH, Charles, S.; Baker & Botts, L.L.P., 2001 Ross Avenue, Dallas, TX 75201–2980 (US).

(81) Designated States: AL, AM, AT, AU, AZ, BA, BB, BG, BR, BY, CA, CH, CN, CU, CZ, DE, DK, EE, ES, FI, GB, GD, GE, GH, GM, HR, HU, ID, IL, IS, JP, KE, KG, KP, KR, KZ, LC, LK, LR, LS, LT, LU, LV, MD, MG, MK, MN, MW, MX, NO, NZ, PL, PT, RO, RU, SD, SE, SG, SI, SK, SL, TJ, TM, TR, TT, UA, UG, UZ, VN, YU, ZW, ARIPO patent (GH, GM, KE, LS, MW, SD, SZ, UG, ZW), Eurasian patent (AM, AZ, BY, KG, KZ, MD, RU, TJ, TM), European patent (AT, BE, CH, CY, DE, DK, ES, FI, FR, GB, GR, IE, IT, LU, MC, NL, PT, SE), OAPI patent (BF, BJ, CF, CG, CI, CM, GA, GN, GW, ML, MR, NE, SN, TD, TG).

Published
With international search report.
Before the expiration of the time limit for amending the claims and to be republished in the event of the receipt of amendments.

(54) Title: SYSTEM AND METHOD FOR CONTROLLING ACCESS TO A TELEPHONY DATABASE

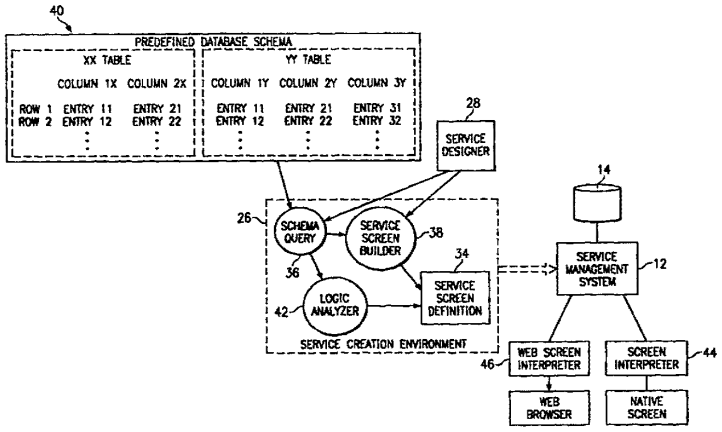

(57) Abstract

A flexible service management system creates, provisions, customizes, and restricts service offerings available on an intelligent network. A service creation environment has a schema query, service screen builder, and logic analyzer that cooperate to create a service screen definition. The service screen definition supports graphical user interfaces that interface with a telephony database. The service screen definition is deployed to a service management system within a service definition package, the service management system interfacing with a telephony database storing telephony data for supporting a service. The service screen definition enables a screen interpreter that can reside on a service management access point to communicate and transact data with the telephony database. The screen interpreter interprets the service screen definition to allow and control access to telephony data and to direct provisioning of services to network elements, such as a service control point, that perform service functions according to customized subscription data in the telephony database. The graphical user interface can communicate through the world wide web to allow customer or other data entry operator access to data on a filtered or restricted basis.

FOR THE PURPOSES OF INFORMATION ONLY

Codes used to identify States party to the PCT on the front pages of pamphlets publishing international applications under the PCT.

AL	Albania	**ES**	Spain	**LS**	Lesotho	**SI**	Slovenia
AM	Armenia	**FI**	Finland	**LT**	Lithuania	**SK**	Slovakia
AT	Austria	**FR**	France	**LU**	Luxembourg	**SN**	Senegal
AU	Australia	**GA**	Gabon	**LV**	Latvia	**SZ**	Swaziland
AZ	Azerbaijan	**GB**	United Kingdom	**MC**	Monaco	**TD**	Chad
BA	Bosnia and Herzegovina	**GE**	Georgia	**MD**	Republic of Moldova	**TG**	Togo
BB	Barbados	**GH**	Ghana	**MG**	Madagascar	**TJ**	Tajikistan
BE	Belgium	**GN**	Guinea	**MK**	The former Yugoslav Republic of Macedonia	**TM**	Turkmenistan
BF	Burkina Faso	**GR**	Greece			**TR**	Turkey
BG	Bulgaria	**HU**	Hungary	**ML**	Mali	**TT**	Trinidad and Tobago
BJ	Benin	**IE**	Ireland	**MN**	Mongolia	**UA**	Ukraine
BR	Brazil	**IL**	Israel	**MR**	Mauritania	**UG**	Uganda
BY	Belarus	**IS**	Iceland	**MW**	Malawi	**US**	United States of America
CA	Canada	**IT**	Italy	**MX**	Mexico	**UZ**	Uzbekistan
CF	Central African Republic	**JP**	Japan	**NE**	Niger	**VN**	Viet Nam
CG	Congo	**KE**	Kenya	**NL**	Netherlands	**YU**	Yugoslavia
CH	Switzerland	**KG**	Kyrgyzstan	**NO**	Norway	**ZW**	Zimbabwe
CI	Côte d'Ivoire	**KP**	Democratic People's Republic of Korea	**NZ**	New Zealand		
CM	Cameroon			**PL**	Poland		
CN	China	**KR**	Republic of Korea	**PT**	Portugal		
CU	Cuba	**KZ**	Kazakstan	**RO**	Romania		
CZ	Czech Republic	**LC**	Saint Lucia	**RU**	Russian Federation		
DE	Germany	**LI**	Liechtenstein	**SD**	Sudan		
DK	Denmark	**LK**	Sri Lanka	**SE**	Sweden		
EE	Estonia	**LR**	Liberia	**SG**	Singapore		

Bright House Networks - Ex. 1008, Page 1478

SYSTEM AND METHOD FOR CONTROLLING ACCESS TO A TELEPHONY DATABASE

TECHNICAL FIELD OF THE INVENTION

This invention relates in general to the field of telephony communications, and more particularly to a system and method for flexibly managing telephony services on a telephony network.

BACKGROUND OF THE INVENTION

Telecommunication companies frequently sell access to physical network telephony communication infrastructure and to telephony services related to the efficient use of such infrastructure. In offering services, the telecommunication companies have increasingly allowed individuals outside their corporate boundaries with options for customizing, restricting, and provisioning the services. An increasing number of companies are entering the telephony service bureau market to sell services by leasing "space" on network infrastructures from network operators. This service market treats physical telephony networks as a commodity which the service bureaus lease from network providers. Service bureaus acquire service technology to solve business telephony needs and then resell access to the technology solution to other telecommunication providers.

One example of a service typically sold by a service bureau is a toll free "800" number such as, for instance, the toll free number frequently used by mail order businesses that sell consumer goods. A consumer can order goods from a mail order company by dialing one toll free number. The consumer's call is routed to a central

processor, such as a service control point. The central processor associates the 800 number dialed by the consumer with the physical location of the mail order company on the network and provides a number for that location to a switch, which routes the consumer's call to that physical location.

Presently, a service subscriber like the mail order company described above, must rely on a service operator to set up and provide the toll free service. The service operator must coordinate with the network operator to provision the service to the central processors on the network. However, creating and provisioning a service on a network can involve complicated software programming and development. Small changes to the service can require extensive programming to enable service logic features and rules on the central processor. This programming is generally accomplished in object oriented C++ software language, and can take six to nine months from the beginning of development until deployment is accomplished on a given network.

Another difficulty related to the creation and provisioning of a service is the service's interaction with the telephony database of the network operator. A single service may have to extract and use data fields from as many as fifteen to twenty separate tables of the telephony database. Network operators have accumulated these databases over time without necessarily intending to make these databases available to third parties such as service operators and service subscribers. Accordingly, these databases may be arranged in non-user friendly formats which require extensive training to understand and use.

For instance, in a typical database, one table can contain a customer's name, telephone number and billing information in separate entry fields in which each field is identified by a unique acronym label. A separate table can contain telephone numbers with each telephone number having associated data identifying particular options associated

with the telephone number, such as call waiting or call forwarding, again with each field identified by a unique acronym label. A data entry operator would have to know how to access and understand each table and each acronym in a database to provide assistance to a service subscriber seeking, for instance, to have a call waiting service enabled for his telephone number. Further, the data entry operator would have complete access to the database, including access to sensitive data, such as credit information, even though the data entry operator has no need for access to this sensitive information to enable the service.

SUMMARY OF THE INVENTION

Therefore, a need has arisen for a flexible service management system to create customize, restrict and provision telephony services onto a telephony network with minimal software programming and with maximized direct interaction by service operators, service providers, or service subscribers.

A further need has arisen for a service management access point that can provide direct access to selected telephony database fields for service customization by a service operator, service provider, or service subscriber, without requiring alterations to the service by the network operator.

A further need has arisen for a system and method to generate graphical user interfaces with logic to support interactions with a telephony database for supporting customization and provisioning of a telephony service on a telephony network.

A further need has arisen for a system and method for controlling access to a telephony database to allow user-friendly interaction to portions of the telephony database having sensitive data while restricting access to the sensitive data itself.

In accordance with the present invention, a system and method for flexibly managing services on a telephony network is provided that substantially eliminates or reduces disadvantages and problems associated with previously developed means of providing services on a telephony network. A service management system interfaces with a telephony network to support a telephony service defined in an associated service definition package. The service management system accepts telephony data for supporting the telephony service. The service management system then validates the telephony data for consistency with the service and the telephony database, including validation of the data's consistency with service exclusions and interactions, and the data's consistency on a field level and a record level, such as the data's referential integrity. The service management system next stores the telephony data, thus acting as a master database for the telephony network. The telephony data can include different versions of services and the status of data for a service, such as active, sending, pending or saved status. The service management system then downloads the telephony data to, for instance, provision the service or activate the service on network elements such as the service control point.

Also in accordance with the present invention, a service management access point is provided that substantially eliminates or reduces disadvantages and problems associated with previously developed means of interacting with a telephony network to manipulate a telephony service. The service management access point allows a physical interface with a network by a service operator, service provider or service subscriber that permits customizing, restricting, and provisioning services on a telephony network. A data entry device interfaces with a telephony database through graphical user interfaces generated with a screen interpreter located on the service management access point. The screen interpreter interacts

with a service screen definition located in the service definition package on the service management system to create service view screens that map telephony data from a table-based schema to a user-friendly service view. A data entry user can customize a service by building a service profile having predetermined service features, or by building a service script with service features from the service definition package or the service profile. The user can input service specific subscription data to enable service features. The service management access point can filter telephony data to restrict viewing, or to restrict changes to viewed data. The user can provision a customized service, including a new service or changes to an existing service, through the service management access point's interaction with the service management system.

Also in accordance with the present invention, an interface is provided for controlling access to a telephony database that substantially eliminates or reduces disadvantages and problems associated with previously developed telephony database interfaces. A service creation environment allows engineering of graphical user interface through a service screen definition included in a service definition package that is deployed to a telephony network. A screen builder builds the service screen definition according to directions from a schema query, which identifies telephony data for supporting a telephony service according to a predefined telephony database schema. A logic analyzer creates executable code to support interaction between a screen interpreter and the telephony database according to the schema query and the predefined schema, and cooperates with the schema query and screen builder to insert the executable code into the service screen definition. The service screen definition can be deployed to a service management system to cooperate with a screen interpreter for supporting interaction with a service on a network.

More specifically, the present invention allows creation of a service in a service creation environment by a service designer. The service creation environment passes a service definition package to a service management system. The service definition package can include a service management program for administering the service, a service logic program for executing the service, a description of the GUI screens used to provision the service, a database schema to support the service, the service global rules, parameters, and variables, a profile containing the constraints for the service, and the service feature descriptions. The elements of the service definition package can be arranged as system building blocks which can interact to customize, provision and restrict service offerings.

The service management system acts as a master database for intelligent network elements which can interact with network infrastructure. The service management system accepts the service definition package from the service creation environment and coordinates provisioning of the service to the network elements. The service management system provides access to telephony databases for service providers, service operators, and service subscribers. In one embodiment, the service management system allows service engineering after deployment of the service definition package to create a secondary service definition package comprised of elements of the deployed service definition package. The service management system accepts, validates and stores data input by the service operator, provider or subscriber and then provisions the data to network elements, such as a service control point, for implementation of the service by the network. The service management system can also track and log errors generated by data or otherwise.

A service management access point can interface with the service management system and plural data input devices, thus acting as a server to enhance interaction of

service operators, providers and subscribers with the service management system. A display manager has a service profile manager for managing user access to service features with the service definition interface that coordinates with the service screen definition for building a service script, and a screen interpreter cooperating with service screen definitions to interpret service screen definitions for supporting graphical user interface displays for telephony data transactions. The service management access point can provide a world wide web or native screen interpreter to collect data from compatible data entry devices for creating, modifying and deleting service providers, provisioning services, mediating data access according to a user's service rule and generating and provisioning specific scripts for subscribers to detail service features that are commissioned by that subscriber. The service management system can support the screen interpreter's production of graphical user interfaces with a security subsystem for monitoring telephony data access according to a user's access level; a traffic metering and metrics subsystem and a statistics and reporting subsystem for monitoring and reporting access activity through the service management access point; a database subsystem for supporting telephony database transactions; and a system building block subsystem for contributing generic functions to service management access point subsystems.

The service creation environment allows a service designer to input a schema query which identifies data from a predefined database schema, the data corresponding to data needed to create and execute a service. The schema query interacts with a screen builder to direct the screen builder to assemble a screen display having a desired arrangement of data for display on an interface. A logic analyzer generates and combines executable code with the output of the screen builder to create a service screen definition. The logic analyzer creates executable code based on the schema query so that the service screen

definition supports a screen interpreter to interact with the service management system and the telephony database after the service screen definition is deployed with the service definition package.

The present invention provides important technical advantages by allowing flexible service programming to take advantage of network element capabilities through efficient logic-driven provisioning of data to optimize telephony resources and speed.

Another important technical advantage of the present invention is allowing customization of a service by a service operator, service provider, or service subscriber through a user-friendly interface. The customization can be accomplished without the generation of additional software code since the service operator, provider, or user can customize a service by enabling particular arrangements of system building blocks located on the service management system or associated with the service management access point.

Another important technical advantage of the present invention relates to the speed and simplicity of provisioning a service on a network. A service operator can create service profiles with predetermined features selected from a service definition package, and can resell the features to a service provider. The service provider can assign profiles to subscribers. The service subscribers can develop a service script and provision subscription data without having to rely on technical assistance. In this way, a service subscriber can initiate and operate a service in a timely manner, and a service operator and provider can collect revenues on the service as soon as the subscriber initiates the service. Further, a subscriber can add, change or delete a service through a direct interface with the service management access point by, for instance, using a world wide web interface.

Another important technical advantage of the present invention is that access to the telephony database can be

restricted based upon a user's predefined access level. For instance, the service management access point may accept user identity data indicating an access level to allow a service operator to change features associated with a service; allow a service provider to restrict available features for particular service subscribers only; or allow service subscribers to select particular features without allowing access to other services.

A further technical advantage of the present invention is that it can present a service view, as opposed to the table view associated with the telephony databases. The service view can include data spanning more than one table of a telephony database. The service view can prevent data operators from accessing and viewing certain sensitive data such as credit data. Alternatively, the service view can allow viewing of telephony data but prevent changes to the data for predetermined access levels.

A further technical advantage of the present invention is the creation of a user-friendly service view that reformats data and labels to allow easy access by data input operators without specific training in telephony. For instance, a telephony database can be presented in a service view with instructions to eliminate confusion and to present selected data from a variety of tables.

Another advantage of the present invention is that a single program in the service creation environment can generate a large number of operator screens with independent service screen definitions. The inclusion of executable code in the service screen definition increases the flexibility of the service creation environment for creating graphical user interfaces for use by service providers, operators and subscribers interacting with the service management system.

BRIEF DESCRIPTION OF THE DRAWINGS

A more complete understanding of the present invention and advantages thereof may be acquired by referring to the following description taken in conjunction with the accompanying drawings in which like reference numbers indicate like features and wherein:

FIGURE 1 depicts a schematic diagram of the present invention incorporated in an intelligent network;

FIGURE 2 depicts four primary roles related to the delivery of a service on a network according to the present invention;

FIGURE 3 depicts a schematic block diagram of service creation environment components for defining a service;

FIGURE 4 depicts screens that implement the creation of a service screen definition;

FIGUREs 5, 5A and 5B depict the functional steps performed by the present invention to present a service view of filtered telephony data;

FIGURE 6 depicts a schematic block diagram of one embodiment of a service management access point interfacing with a telephony database associated with a service management system;

FIGURE 7 depicts a schematic block diagram of one embodiment of the service management access point;

FIGUREs 8A and 8B depict Web browser screens for creating and provisioning a service script through a service management access point;

FIGURE 8C depicts a Web browser screen for supplying subscription data through a service management access point;

FIGURE 9 depicts a flow diagram for the service management system to communicate telephony data to a telephony network;

FIGURE 10 depicts a flow diagram for the service management system for activating a service; and

FIGURE 11 depicts a flow diagram for the service management system for processing a service.

DETAILED DESCRIPTION OF THE INVENTION

Preferred embodiments of the present invention are illustrated in the figures, like numerals being used to refer to like and corresponding parts of the various drawings.

I. Intelligent Network Services

Advanced intelligent network telephony systems, such as the AINFusion system sold by DSC Communications, have enhanced and simplified the services available to telephony customers. Intelligent network systems use intelligent network elements distributed across the intelligent network to create, provision and operate services in an efficient and timely manner.

A. Network Elements

Referring now to FIGURE 1, a schematic diagram of an intelligent network 10 having network elements to perform flexible service management provides an overview of the operation of the present invention within a telephony network. A service management system 12 having an associated data storage device 14 acts as the master database for the network elements of the intelligent network 10 and coordinates provisioning of services to the network elements. Service management system 12 can be any processor with interfaces and associated peripherals to support communication along intelligent network 10. For instance, service management system 12 can be a SPARC workstation produced by Sun and adapted to operate with common object request broker architecture ("CORBA").

Service management system 12 interfaces through intelligent network 10 with one or more service control points 16. Each service control point 16 has an associated data storage device 18 for storing intelligent network telephony data to operate predetermined services. Service control point 16 can also be a Sun SPARC workstation having interfaces and adequate processing capabilities to manage a predetermined level of network activity.

Each service control point 16 interfaces through intelligent network 10 with one or more signal transfer points 20. Each signal transfer point 20 interfaces with one or more switches 22, which in turn interface with one or more telephony devices such as telephones 24. When a telephone 24 directs a communication, such as a telephone call directed at a particular telephone number, switch 22 can either direct the telephone call to an associated telephony device or can direct the telephone call to a signal transfer point 20 where the telephone call can in turn be directed to another signal transfer point, a switch, or a telephony device. Signal transfer point 20 communicates with service control point 16 when necessary to obtain instructions for directing a call due to, for instance, the call's initiation of a service.

B. Service Operations

One example of the elements of intelligent network 10 cooperating to provide a service to a customer can be illustrated by describing the steps involved in directing a toll free 800 telephone call. A consumer inputs the 800 phone number into a telephone 24, which directs the 800 number to switch 22. Switch 22 provides the 800 number to signal transfer point 20, which in turn passes the 800 number to service control point 16. Service control point 16 searches data storage device 18 to determine the identity of the telephony device 24 to which the telephone call should be directed. The identity of the end point of the telephone call can vary dependent upon a number of predetermined conditions, including the time of day, the origin of the call, the quantity of calls directed to the end point of the telephone call, and any of a number of other factors. Once the actual end point of the 800 call has been determined, the service control point 16 provides the end point of the call to signal transfer point 20 which communicates through switch 22 to operationally direct the call to the end point.

Service management system 12 generally does not actively participate in the operational aspects of a service, but rather operates as a central source of the data needed by service control point 16 to perform the service. Data is downloaded to the service control point, which has an operational database to enable service features according to subscription data. Service management system 12 thus acts as a master database for providing data to service control point 16, and includes a service management program to manage provisioning of services, including management of telephony data to support the service, to service control point 16.

II. Service Roles

Referring to FIGURE 2, four primary roles associated with implementation of a service according to the present invention are depicted.

A. Network Operator Role

In the first role, the network operator of intelligent network 10 defines the service on the service creation environment in the form of a service definition package having service logic, service features and global service rules. The network operator can electronically deploy the service definition package to the service management system 12 for use by any number of service operators.

B. Service Operator Role

In the next role, one or more service operators can create new service definition packages from the first service definition package defined by the network operator, or can create service profiles from the service features in the first or succeeding service definition packages. For instance, the service operator can enable features for an 800 number such as origin dependent routing, time dependent routing, and call forwarding.

The service operator can provide separate service profiles for a number of service providers, and can store and maintain the service profiles in a service provider database associated with the service management system.

For instance, if a service provider commissions only origin dependent routing and time dependent routing, the service operator would allow that service provider to access a predetermined service provider database, for instance by using the service management access point, with only those service features enabled. Advantageously, a service operator can update service provider databases as new technology is developed and sold, and parse out service features by creating and supplying service providers with access to plural service definition packages. Under present service architectures, network operators frequently perform functions described herein under the role of the service operator.

C. Service Provider

In the third role, a service provider can select service feature definitions from service profiles to create a service for sale to service subscribers. One or more services can be created. For instance, the service provider can use service management access point 30 to enable his commissioned service profile, which can allow the service provider to select origin dependent routing and time dependent routing to create an 800 Deluxe Service; or, alternatively, the service provider can select only time dependent routing to create an 800 Basic service.

D. Service Subscriber

The fourth role is filled by one or more service subscribers, who purchase and use services, for instance by accepting calls directed to a toll free number. The subscriber can create a service script which determines the order in which specific service features will be executed. The service management access point can allow the subscriber to directly provision parameters with subscription data, meaning without the assistance of a service provider or service operator. The service subscriber can save particular parameters for a given service script by storing subscription data in isolated databases on the service management system.

III. Creation of a Service

Service management system 12 receives a service definition package that can be created in a service creation environment 26 by a service designer 28. The service definition package comprises a service management program for administering the service and provisioning the service to network elements of intelligent network 10; a service logic program which enables execution of the service by service control point 16; service screen definitions of the graphical user interface screens required to subscribe and provision the service; a database schema to support service transactions with the telephony database; service global rules, parameters, and variables; a profile containing the constraints for the service; and service feature descriptions.

A. Service Creation Environment Components

Referring now to FIGURE 3, a system and method for creating a service screen definition 34 is depicted. Service screen definition 34 enables graphical user interfaces on service management system 12 to support flexible service management. Service designer 28 provides service functions and related database information to a schema query program 36 and a service screen builder 38. Schema query program 36 is also provided with the predefined database schema 40 for one or more telephony databases having data needed for the desired service. Schema query program 36 is a software program enabled in object oriented language such as C++. Service screen builder 38 can be a commercially available screen builder such as Spectel which is marketed by Sun. Schema query program 36 interfaces with screen builder 38 to specify the screen which screen builder 38 assembles for a particular service or feature. Schema query program 36 actually drives screen builder 38 to automatically build a desired screen display without requiring service screen builder 38 to communicate directly with database schema 40.

A logic analyzer 42 accepts data from schema query 36 and creates program logic to enable screens to communicate with the service management system and service control point databases. Logic analyzer 42 generates executable code for intelligent database interaction and stores the executable code with the output of service screen builder 38 into the service screen definition file 34. Service screen definition file 34 can be provided to service management system 12 when the service definition package is deployed.

Referring to FIGURE 4, some examples of screens used by the present invention to engineer graphical user interfaces for a service are illustrated. A database schema screen 50 depicts the predefined table view of a database schema having one table relating to employee phone numbers, and shows the fields available for use by a service. The logic analyzer screen 52 shows the fields selected by a service designer for the logic analyzer to identify in the service screen definition. The logic analyzer directs the screen builder to include executable code in a screen-builder screen 54, which allows the service designer to arrange a graphical user interface. The screen definition resulting from the selection by screen-builder 54 allows a native screen display 56 or a world wide web display 58, each display having a service view.

B. Service Definition Package Deployment

After service designer 28 creates the service definition package, service creation environment 26 can transfer the service definition package to service management system 12 by tape, or by electronic transmission. At deployment, previous versions of the service, if such versions exist, can optionally be retained. The service management program is installed to manage service provisioning, and database structures required to provision the service are created. The service feature information is stored in a database, and service

global rules, parameters and variables are initialized. Finally, information for generating local service provisioning screens is extracted to allow the service management access point to interface with the service management system.

Once service screen definition file 34 is available on service management system 12, service screen definition file 34 can act as a map to transfer information from data entry operator screens into telephony databases, and to transfer information from the telephony databases to the screen. Service screen definition file 34 can operate through screen interpreters 44 and 46, or can operate through service management access point 30. The executable code created by logic analyzer 42 enables a screen interpreter to display graphical user interfaces on screens according to a predetermined screen layout and to communicate with a telephony database storage device 14 or service control point database in storage device 18. In one embodiment, a screen interpreter can use HTML format to allow direct service subscriber access to database 14 through the world wide web without service operator or service provider assistance. Direct customer access can eliminate the need to perform batch updates to database 14, allowing near instantaneous enablement of services and modification of existing services.

IV. Service Management Access Point Functions

A service management access point 30 interfaced with service management system 12 can use service features created in the service creation environment through graphical user interfaces supported by the service screen definitions to direct subscription and provisioning of all or part of a service to network elements such as service control point 16. Data entry operators can interface with service management access point 30 by using, for example, native screen interpreters, or a web screen interpreter.

A. Data Operator Interaction

The service management access point can identify the level of access for each data entry operator 32 dependent upon security information associated with the data entry operator. Service management access point 30 can accept instructions from data entry operators 32 to direct the service management system to provision services on intelligent network 10. With user-friendly graphical icons, service management system 12 can accept and provision particular service features and generate a report for each data entry operator 32 or for each service used.

Referring to FIGURE 5, several important functions available through a service management access point's use of service screen definitions created by the service creation environment are depicted, including the ability to span tables and produce a service view, and the ability to filter telephony data. A telephony database 48 uses labels to identify stored data, including a name label, PSN label, credit number label, call waiting label, and call forwarding label, with the data located in two separate tables, an identification table and a services table. In pre-existing systems, a data entry operator would have to call up each table of the database in order to enable call forwarding for Mark at telephone number 96517. The data entry operator would need familiarity with the layout of the database, including the identification and services table, in order to locate data in the services table based on Mark's PSN. Further, in the process of enabling call forwarding, the data entry operator would view Mark's credit information.

The service screen definition file allows a service view, an example of which is depicted in FIGURE 5A, displayed in a user-friendly context while simultaneously filtering out Mark's sensitive credit data as depicted in FIGURE 5B. Schema query 36 creates service screen definition file 34 by identifying the location in predefined database schema 40 of name, PSN, call waiting and call forwarding data. Schema query directs service

screen builder 38 to assemble the desired data in a user-friendly service view format of FIGURE 5A, including a translation of the PSN acronym into a more easily understood "phone number" description. Logic analyzer 42 accepts schema query data to create executable code in service screen definition file 34 which allows a data entry operator to point and click on call forwarding, in the example of FIGURE 5A, in order to enable that service. The screen interpreter uses the executable code created by logic analyzer 42 to insert activation of call forwarding into database 14. Service management system 12 can then provision the newly activated call forwarding service to service control points 16 to enable call forwarding for Mark.

In one embodiment, the service view can prevent a data entry operator from changing the name and phone number entries for Mark's phone number by filtering data input by the data entry operator with executable code that associates user access levels with predetermined data classifications. In this way, the integrity of database 14 can be protected from unauthorized alterations. For instance, in one embodiment, a data entry operator could view call waiting as a service commissioned by Mark but the screen interpreter would prevent the data entry operator from changing the status of Mark's call waiting service. Thus, a service provider could obtain and use information about the services commissioned by Mark even if the service provider is unauthorized to assign the call waiting service.

B. World Wide Web Interface

Referring now to FIGURE 6, one embodiment of a service management access point acting as a world wide web server is depicted. A web browser 60, such as the Netscape web browser, requests screens from the service management access point 30 using TCP\IP and the HTTP protocol through an Internet or intranet interface. Service management access point 30 acts as a gateway to enable, manage, and

control access to service management system 12 and the telephony database 14 associated with service management system 12. Service management access point 30 presents data operators or other users with Internet browser screens based on the user's access level to provide: the ability to provision services; the ability to create, modify, and delete service providers; the ability to represent service features as graphical icons; the ability to graphically represent selectable sets of service features; the ability to generate and provision a service subscriber specific service script which details service features commissioned by a subscriber; and the ability to generate reports based on a user's level of access.

C. Service Management System Interaction

The service management access point 30 utilizes service management system 12 as a database server allowing service management access point 30 to operate without databases physically residing on it. In the embodiment depicted in FIGURE 6, service management access point 30 utilizes INFusion generic provisioning interface, available from DSC Communications Corporation, for transactions to a Sybase database 14 associated with service management system 12. The generic provisioning interface defines a set of messages to query and update the service management system resident Sybase database.

Database 14 also maintains tables specifically created to support service management access point administrative functions, such as a network operator, service operator, service provider, service subscriber, feature global data, branch constraints, and feature\icon cross reference tables. Operations to service management access point specific databases resident on database 14 can bypass the generic provisioning interface layer to directly leverage database primitive software objects located on service management system 12. Database primitives can implement in a generic fashion all low level database access functions required by the service management access point

applications. An operations subsystem residing in service management access point common gateway interface directory 62 can support service management access point functional applications. For instance, in the embodiment depicted by FIGURE 6, Sybase database primitives can be supported, including primitives to support: opening a connection to the database, database query, database entry creation, database entry modification, database entry deletion, database view creation, database view modification, and database view deletion.

D. Service Management Access Point Subsystems

Referring now to FIGURE 7, a schematic block diagram depicts subsystems that can support service management access point operations. A security subsystem 64 functions to guard against unauthorized access to telephony data throughout the life of a service management access point session. User access to telephony data can be associated with an access level determined by a user login or other user validation before a protected screen with sensitive data is served to a user. Service screen definition and security subsystem 64 can cooperate to prevent the display of sensitive data to unauthorized users by filtering such data according to a user's access level, and can also prevent a user from manipulating predetermined data classifications displayed to users with limited access levels to protect database integrity. Essentially, security system 64 cooperates with service screen definitions deployed by a service operator to filter data transactions that occur through service management access point 30.

Database subsystem 66 has a set of functions that implement a service management system generic provisioning client and low level routines to enable access to one or more remote database tables, such as Sybase tables. Database subsystem 66 routines are parameter driven to accept a set of known inputs, and to generate a standard set of returned codes using database primitives. Database

subsystem 66 monitors the required parameters and return codes to determine and describe the success or failure of a database operation.

Display manager 68 manages all data sent to a data entry operator, such as data transactions through a web browser, and can include several display management applications, a web server, and common gateway interface programs. The display management applications can include a service profile manager and a graphical user interface logic interpreter, such as a screen interpreter for applying executable code inserted in the service screen definitions created by the logic analyzer in the service creation environment.

Within a service definition package, a user can reference initial screen layouts associated with service screen definitions and saved under unique identifiers. Display manager 68 can read initial screen layouts, attributes, and validation routines from the service management system and translate the screens into a format for data entry devices to accept, such as a browser format for web browsers to transmit to web compatible devices. A network operator can use this functionality to customize screens in a post-deployment service engineering process through the service creation environment to: assign pull down menus to prompts; assign values available for provisioning on a per prompt basis; assign graphical shortcuts, such as radio buttons, to fields; designate fields read only; remove the ability to view a prompt from the screen; and wrap the screen with corporate header, footer, and/or HTML frame information. Once the service engineering process is completed, particular screen formats and configuration files can be saved in telephony database 14 and packaged into uniquely identified service definition packages that can be assigned to service operators.

Each service definition package in the service management system can support a telephony service. Service operators can specify one or more services by building

service offerings associated with each service. To support building of services with a service definition package, display manager 68 allows further customization of screens and the definition of service profiles comprised of service features available in a service definition package. Once a service profile is defined, it can be uniquely identified and stored in database 14 and accessed with display manager 68. Customization available to a service operator or service provider for specific services include the ability to remove access to specific prompts, the ability to designate additional fields as read only, the ability to limit or remove access to service features, the ability to further restrict valid input criteria, and the ability to limit feature activation frequency. Once a service operator or a service provider activates a particular service for an identified service subscriber, that subscriber can use display manager 68 to utilize the service for authorized service profiles. The service subscriber can interact with graphical user interfaces supplied by display manager 68 to build a service script and to define a service logic path based on branches defined in an assigned service profile.

Traffic metering and metrics subsystem 70 has a set of common routines to track accesses and operations of the service management access point. Traffic metering and metrics subsystem 70 can monitor and record data representing the number of times each graphical user interface is accessed through the service management access point, including the date and time of each access with a breakdown of the originating IP address and machine host name for each access. This traffic metering and metrics data is provided to statistics and reporting subsystem 72 when authorized users request historical, statistical, and provisioning reports.

System building block subsystem 74 has a library of commonly used routines to contribute to core generic functions of service management access point applications.

For instance, system building blocks can support string manipulation functions, memory management functions, flat file input/output functions, time and date functions, and generic data validation routines.

V. Subscribing a Service According to a Script

The service management access point allows service negotiation with proper feature interactions. The service management access point reads subscriber data, and displays available services based on the subscriber's access level, network switch types and version numbers. The subscriber can select available services according to service exclusions and interactions, and can input subscription data to enable the service.

Referring now to FIGUREs 8A and 8B, examples of screens which can be produced by screen display 68 for a browser associated with a data entry device are depicted. FIGURE 8A depicts four service features 80 through 86 available in a service profile which a user can select as features for inclusion in a service script. A service entry point 88 is represented by an icon which initiates the definition of the service features into the service script. A data entry operator, who can, for instance, be a service subscriber or service provider, can select features 80 through 86 from the feature list by clicking and dragging a feature to a tree 90 extending from service entry point 88. As each feature is attached to tree 90, only those services which remain available from the service profile can be listed in the features list, thus limiting the user from selecting unavailable features. When the user has completed the definition of the service script, he can point and click to another icon to send the script to the service management system through the service management access point. The service management program associated with the service definition package accessed by the user can then provision the service to the network through the service management system.

Referring to FIGURE 8B, when the service profile has defined a service logic path, the subscriber can use a graphical user interface similar to that of FIGURE 8B to subscribe a service script with subscription data for enabling the service. From service entry point 90, a subscriber has subscribed to time dependent routing. With icon 82 the subscriber has input two time range values 92 which define the routing of calls during each respective time period. From 8:00 until 17:00, the subscriber has directed all calls according to origin depending routing icon 80. Thus, for instance, calls to the subscriber's 800 number at noon from the 214 area code will be routed to phone number (214) 495-3311. During times outside of the 8:00 to 17:00 range, calls to the subscriber's 800 number will be routed to time dependent routing data 96 which indicates phone number (214) 518-5000.

Referring to FIGURE 8C, another format of a graphical user interface for accepting subscription data is depicted. The subscriber can input subscription data for time dependent routing into data boxes 98. The service profile depicted in FIGURE 8C allows the subscriber to use call forwarding if the number selected by time dependent routing is busy.

VI. Service Management System Functions

The service management system manages the flow of provisioning of a service to network elements and activation of the service on the network elements. In broad terms, the service management system acts as a master database to transfer telephony data for supporting one or more services on network elements, such as service control points. Once a service is provisioned and activated, the service management system does not generally participate in service logic on the network. To provision and activate service logic, the service management system performs four functions: accepts and collects data, validates the data, stores the data and downloads the data to the network in a

provisioning process that enables and activates the services.

The service management system accepts data according to its data type, including the data's origin and purpose. For instance, the service management system identifies data as originating from a service operator, provider or subscriber. The service management system can also identify data as subscription data for a specific service, service logic such as global variables or rules, and network data which applies to network elements independent of services. The service management system also accepts data according to its order type. For instance, the service management system can identify data as implementing a new service, a change in an existing service, or a deletion of a service, and can validate order content state and sequence. The service management system can also identify data according to the data's action, including insert, delete, update and query actions.

The service management system validates data on several levels to limit or eliminate a need for validation on the network elements, thus supporting automatic provisioning of service to network elements with reduced system errors. A field level validation can ensure that schema-related commands correlate to field formats in the telephony database, including, for example, alphanumeric and range validation. A record level validation ensures referential integrity by checking for field existence for each action and for a future view of the service. The service management system can validate a user's exclusions and interaction limitations, and can audit usage for billing and marketing purposes.

The service management system stores data, and can store services and service offerings in different version records. A user can have an active service version, but can revert to older versions. Each version and related data can be stored according to a status, such as active,

inactive, sending, pending, or saved to allow more efficient use of data storage hardware.

The service management system downloads data to network elements in a process known as provisioning. A scheduler can initiate provisioning at a predetermined time or date. Activation logic, created during deployment of the service definition package, issues service specific activation instructions to initiate the service on the network, determines an order for downloading, and failure options. Download can occur over common interfaces, such as CORBA, and can be managed with appropriate queue manipulation. The service management system ensures download of proper contents to proper network elements, and can convert and revalidate service data for a current view of the appropriate network elements.

Provisioning logic can be developed with the service creation environment and can include service specific and generic system building blocks to perform provisioning functions. The provisioning logic validates the data needed for functional operation of each service and ensures referential integrity of each service and database schema reference for network elements.

Activation logic can also be built with the service creation environment, but is specific for each service. Activation logic includes instructions for determining the order of downloading service functions, as well as options should the service fail. For instance, if the service fails along the network elements, activation logic can roll back the failed network elements, can roll back all network elements, or can direct continuation of the service despite the failure.

Activation logic is based on subscription data for each particular service. Each action requires separate logic, for instance, to insert, delete, modify or query a service. Referring to FIGURE 9, a flow diagram of activation logic performed by the service management system for activation of a service is depicted. A user initiates

an action, such as inserting subscription data to support a toll free number. At step 102, the service management system reads the subscription data and, at step 104, seeks to validate the form and substance of the subscription data. At step 106, the service management system makes a determination of the validity of the subscription data and, at step 108, sends a provisioning message to the service control point containing the subscription data for enablement of the service. At step 110, the service management system determines the success of the message transferred to the service control point and, at step 112, updates the provisioning status to sending to, at step 114, displays the status to the user. Referring to FIGURE 11, the service control point provides a response to the service management system through a response system building block. At step 118, the service management system determines the success of insertion of the subscription data based on the response and, at step 120, updates the status of the service associated with the subscription data to the service management system for, at step 122, display to the user.

Referring to FIGURE 10, service management system logic for responding to a provisioning of a service is indicated. At step 124, a response system building block accepts the response from the system control point to allow the service management system at step 126 to determine the success of the downloading of the service. At step 128, the service management system checks for trigger data to initiate operation of the service and, at step 130, determines if an update to the trigger data is needed. If an update is needed, at step 132, new trigger data is sent to the service control point. If no updated trigger data is needed, the service management system at step 134 updates the status of the service to active and, at step 136, displays the active status to the user. Each interface message can be supported by a system building block, and system building blocks can also invoke APIs.

To support provisioning and activation of a service and to prevent unauthorized access to telephony data, the service management system can partition telephony data into separate tables. For instance, one table can include user data, with administrative data for each user of the service management system having separate files. Another table can include subscription data to support services subscribed by each user. A third table can include network data such as switch data for each telephone company to support interaction of the services and the network. Finally, a fourth table can include service data such as the global variables, service logic programs, service triggers, and other essential telephony data for the functioning of a service. The service management system can isolate each partitioned data table to help ensure the integrity and security of essential telephony data.

Although the present invention has been described in detail, it should be understood that various changes, substitutions and alterations can be made hereto without departing from the spirit and scope of the invention as defined by the appended claims.

WHAT IS CLAIMED IS:

1. A method for controlling access to a telephony database with a graphical user interface, the database having a predefined schema for storing telephony data in the telephony database, the method comprising the steps of:

a) providing a logic analyzer, a schema query, a screen builder, and a screen interpreter;

b) generating executable code with the logic analyzer, the code for supporting interaction between the screen interpreter and the telephony database according to the schema query and the predefined schema;

c) using the schema query to direct the screen builder to assemble a screen for supporting the graphical user interface;

d) inserting the executable code into the screen assembled by the screen builder to create a service screen definition; and

e) providing the service screen definition to the screen interpreter to enable a graphical user interface for interacting with the telephony database.

2. A method according to Claim 1 wherein the schema query corresponds to a telephony service.

3. The method according to Claim 2 wherein the telephony service comprises a toll free telephone number service.

4. The method according to Claim 3 wherein the schema query comprises a table associated with origin dependent routing for a toll free telephone service.

5. The method of Claim 3 wherein the schema query comprises a table associated with time dependent routing for a toll free telephone service.

6. The method according to Claim 1 wherein the screen builder is Spectle.

7. The method according to Claim 1 wherein the screen interpreter comprises a native screen interpreter.

8. The method according to Claim 1 wherein the screen interpreter comprises a world wide Web screen interpreter.

9. The method according to Claim 1 wherein the telephony database has sensitive data, the method further comprising the step of:

d1) filtering sensitive data from the service screen definition.

10. The method according to Claim 9 further comprising the steps of:

d2) formatting the service screen definition to provide a service view.

11. The method according to Claim 1 further comprising the steps of:

f) creating a service management package comprising the service screen definition, the service management package defining a telephony service;

g) transferring the service management package to a service management system; and

h) provisioning the service with the service management system to at least one telephony network element;

12. The method according to Claim 11 further comprising the step of:

i) modifying the service with the service management system; and

j) provisioning the modified service to at least one telephony network element.

13. The method according to Claim 12 wherein step (i) further comprises the steps of:

(i1) providing a service management access point;

(i2) interfacing a data input device with the service management access point by using the service screen definition;

(i3) interfacing the service management access point with the service management system;

(i4) modifying the service with the data input device; and

(i5) storing the modified service on the service management system.

14. The method according to Claim 13 wherein step (i2) further comprises interfacing a plurality of data input devices with the service management access point by using the service screen definition.

15. The method according to Claim 13 wherein the service screen definition comprises an world wide web screen interpreter and further wherein step (i2) comprises interfacing a data entry device with the service management access point through the world wide web.

16. A system for controlling access to a telephony database with a graphical user interface, the database having a predefined schema for storing telephony data, the telephony data for supporting one or more telephony services on a telephony network, the system comprising:

a service creation environment comprising:

a screen builder;

a logic analyzer for generating executable code to support graphical user interface interaction with the telephony database; and

a schema query, the schema query for directing the screen builder to create a service screen definition, the schema query further for cooperating with the logic analyzer to insert executable code into the service screen definition;

a data entry device;

a screen interpreter, the screen interpreter cooperating with the service screen definition to display a graphical user interface on the data entry screen; and

a service management system interfaced with the data entry screen, the service management system for provisioning telephony data to support a telephony service on a telephony network.

17. The system according to Claim 16 wherein the telephony network comprises a plurality of network elements for directing telephony communications according to one or more telephony services and wherein the service management system provisions at least one service to at least one network element.

18. The system according to Claim 17 wherein the at least one network element comprises a service control point.

19. The system according to Claim 17 wherein the service screen definition cooperates with the screen interpreter to display a graphical user interface having a service view.

20. The system according to Claim 19 wherein the screen interpreter comprises a native screen interpreter.

21. The system according to Claim 19 wherein the screen interpreter comprises a world wide web screen interpreter.

22. The system according to Claim 21 further comprising a service management access point interfaced with the service management system and the data entry screen, the service management access point for accepting telephony data from the data entry screen and for communicating the telephony data to the service management system, the telephony data for supporting provisioning of at least one service by the service management system to the telephony network.

23. The system according to Claim 22 wherein the service management access point accepts telephony data from a service subscriber.

24. A method for interacting with a telephony database, the database having a predefined schema defining at least one table, each of the at least one tables storing telephony data according to labels and entry points, the method comprising the steps of:

providing a schema query comprising predetermined telephony data labels;

generating executable code with a logic analyzer, the executable code for supporting interaction with the telephony data according to the schema query;

directing a screen builder to assemble a service screen definition, the service screen definition comprising the executable code;

interpreting the service screen definition with a screen interpreter to enable a graphical user interface;

displaying the graphical user interface on a display screen communicating with the screen interpreter;

interacting with the telephony database through the graphical user interface.

25. The method according to Claim 24 wherein said directing a screen builder step further comprises the schema query directing the screen builder to assemble the service screen definition.

26. The method according to Claim 25 wherein said interacting with the telephony database step further comprises communicating telephony data through the graphical user interface to a service management system, the service management system managing data stored in the telephony database.

27. The method according to Claim 26 wherein the telephony database supports a telephony service, the method further comprising the step of provisioning the telephony service to a telephony network with the service management system according to the telephony data communicated through the graphical user interface.

28. The method according to Claim 27 wherein the telephony service comprises a toll free telephony service for supporting a toll free telephone number.

29. The method according to Claim 28 wherein the toll free telephony services comprise time dependent routing.

30. The method according to Claim 26 wherein said displaying graphical user interface step further comprises displaying a graphical user interface on a data entry screen, the data entry screen communicating with a service management access point; and

wherein said interacting with the telephony database steps further comprises communicating telephony data through the graphical user interface to the service management access point, the service management access point further communicating telephony data to the service management system.

31. The method according to Claim 30 wherein said displaying graphical user interface step further comprises displaying a graphical user interface on plural data entry screens by communicating the service screen definition to a screen interpreter associated with each data entry screen, each data entry screen communicating with a service management access point.

32. The method according to Claim 31 wherein the screen interpreter comprises a world wide web screen interpreter.

33. The method according to Claim 31 wherein said interacting with the telephony database step is performed by a service subscriber.

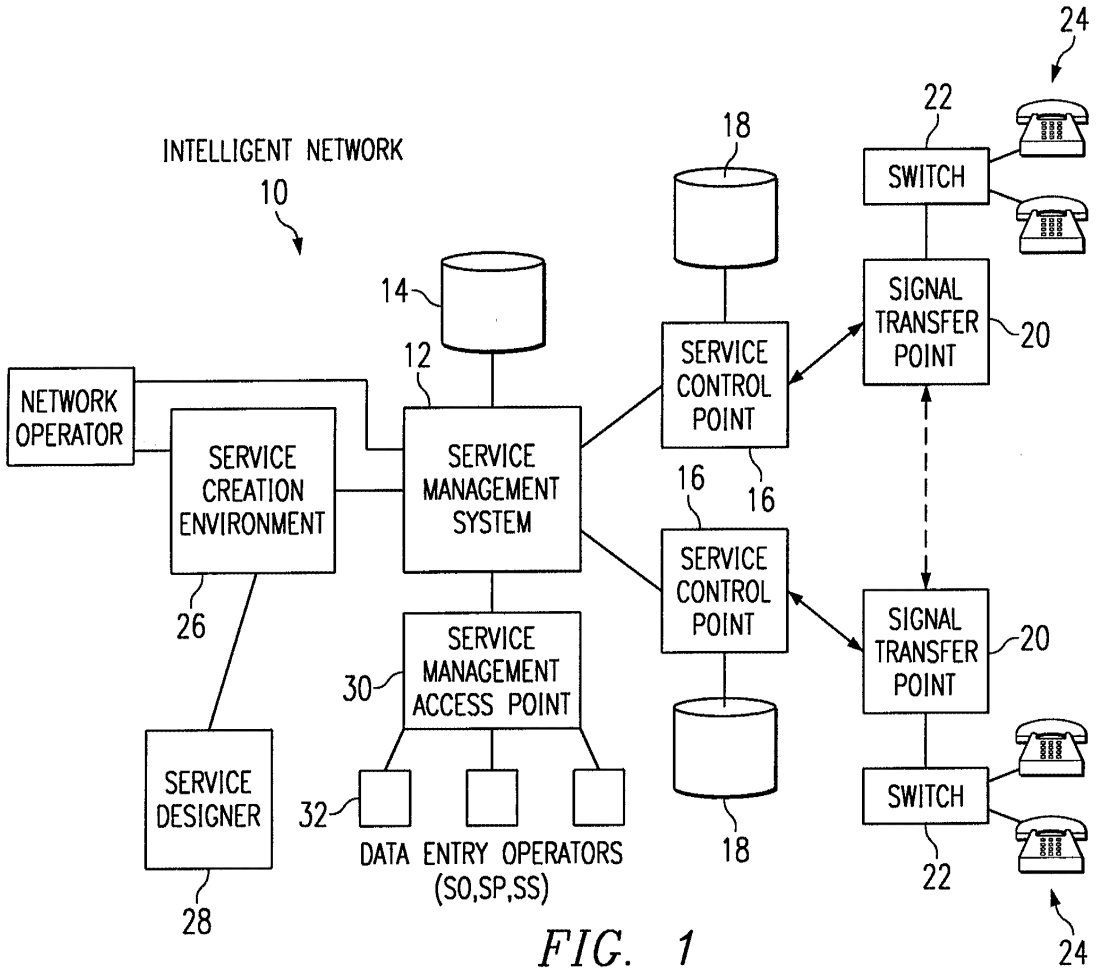

FIG. 1

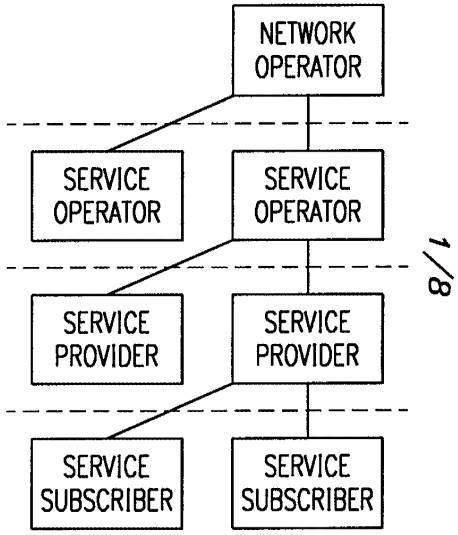

FIG. 2

PCT/US98/21058

Bright House Networks - Ex. 1008, Page 1517

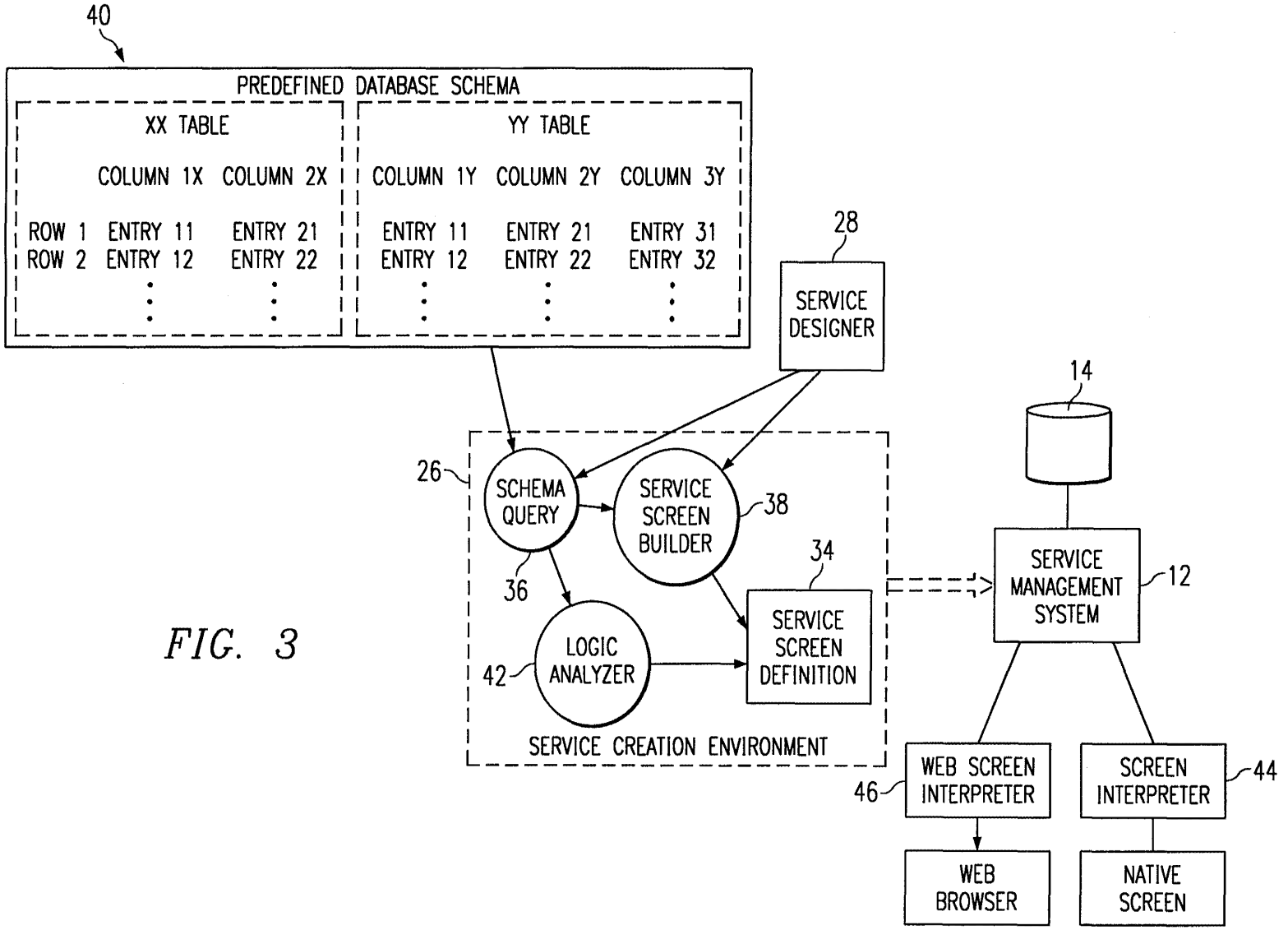
40
PREDEFINED DATABASE SCHEMA
XX TABLE
COLUMN 1X COLUMN 2X
ROW 1 ENTRY 11 ENTRY 21
ROW 2 ENTRY 12 ENTRY 22
YY TABLE
COLUMN 1Y COLUMN 2Y COLUMN 3Y
ENTRY 11 ENTRY 21 ENTRY 31
ENTRY 12 ENTRY 22 ENTRY 32
28
SERVICE DESIGNER
14
26
SCHEMA QUERY
SERVICE SCREEN BUILDER
38
34
36
SERVICE MANAGEMENT SYSTEM
12
LOGIC ANALYZER
42
SERVICE SCREEN DEFINITION
SERVICE CREATION ENVIRONMENT
WEB SCREEN INTERPRETER
SCREEN INTERPRETER
44
46
WEB BROWSER
NATIVE SCREEN

FIG. 3

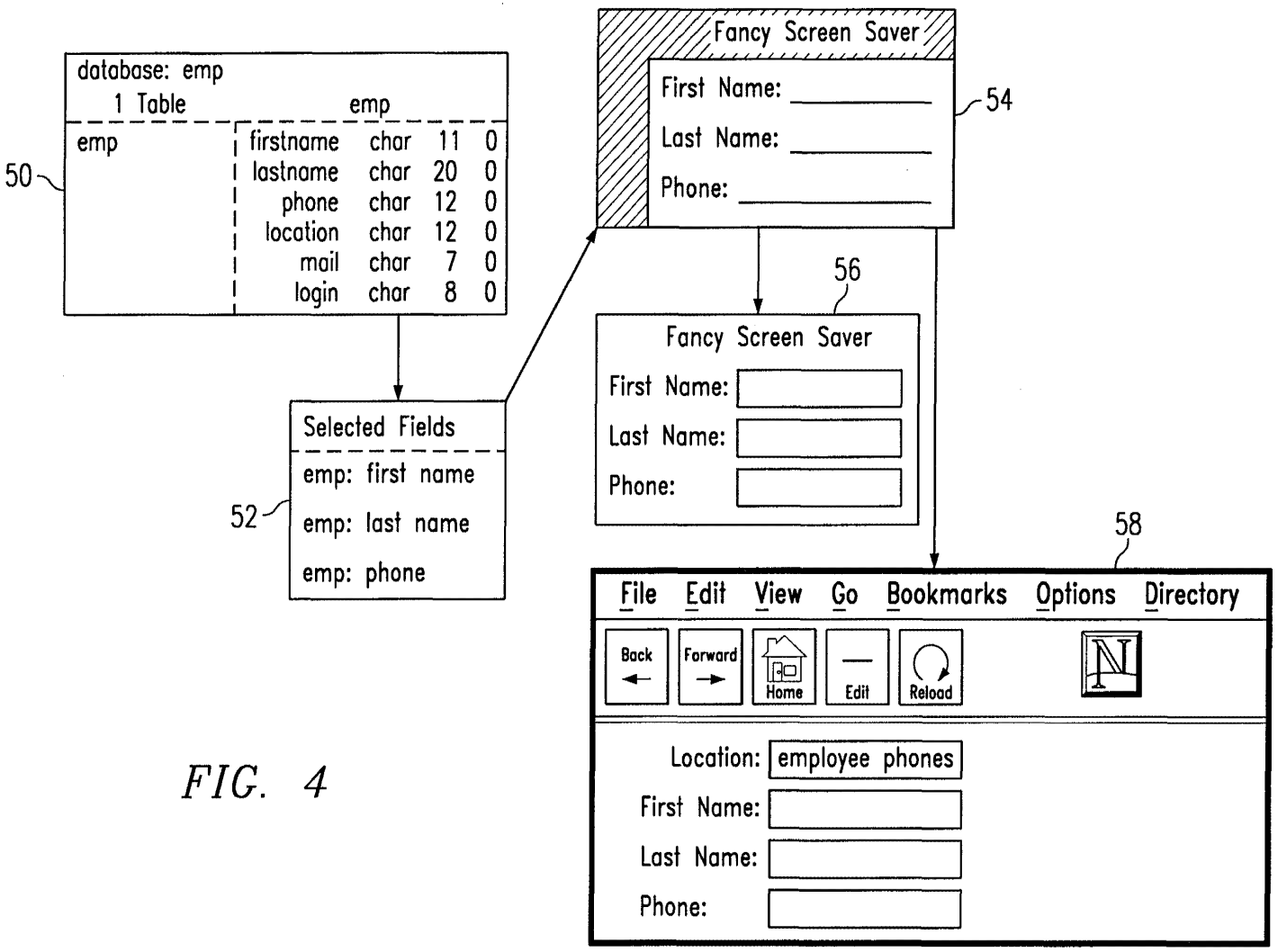
database: emp
1 Table
emp
emp
firstname char 11 0
lastname char 20 0
phone char 12 0
location char 12 0
mail char 7 0
login char 8 0
50
Selected Fields
emp: first name
emp: last name
emp: phone
52
Fancy Screen Saver
First Name:
Last Name:
Phone:
54
56
Fancy Screen Saver
First Name:
Last Name:
Phone:
58
File Edit View Go Bookmarks Options Directory
Back
Forward
Home
Edit
Reload
Location: employee phones
First Name:
Last Name:
Phone:

FIG. 4

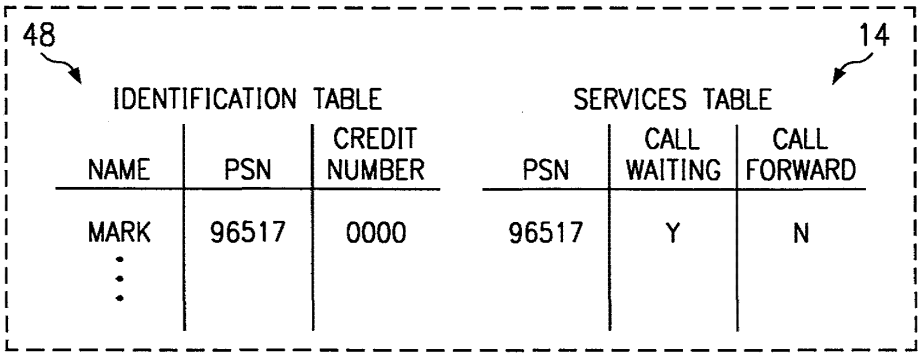

FIG. 5

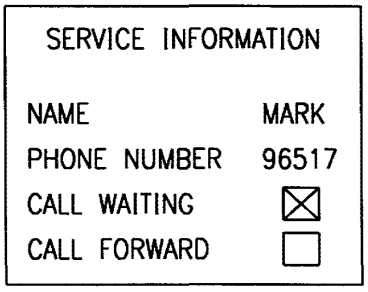

FIG. 5A

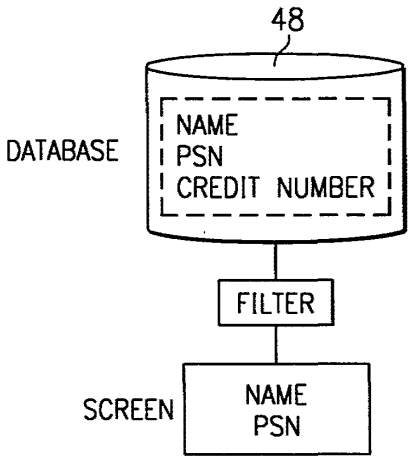

FIG. 5B

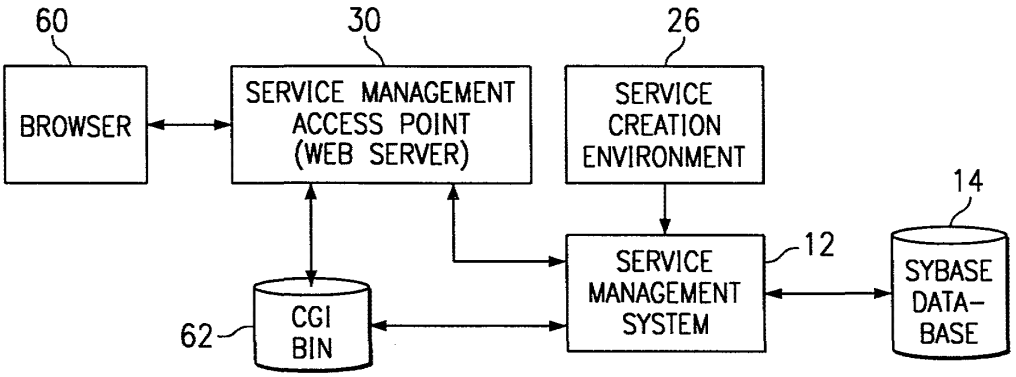

FIG. 6

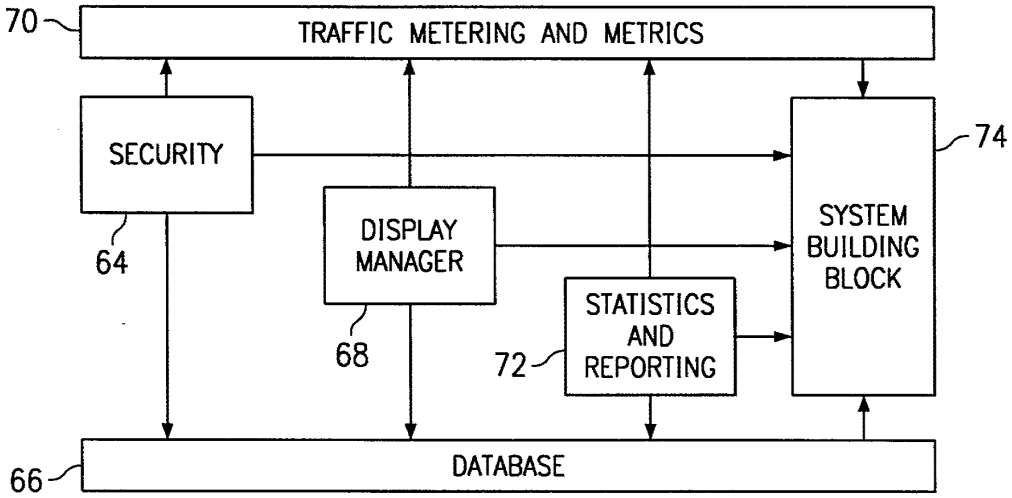
70
TRAFFIC METERING AND METRICS
SECURITY
64
DISPLAY MANAGER
68
STATISTICS AND REPORTING
72
SYSTEM BUILDING BLOCK
74
66
DATABASE

FIG. 7

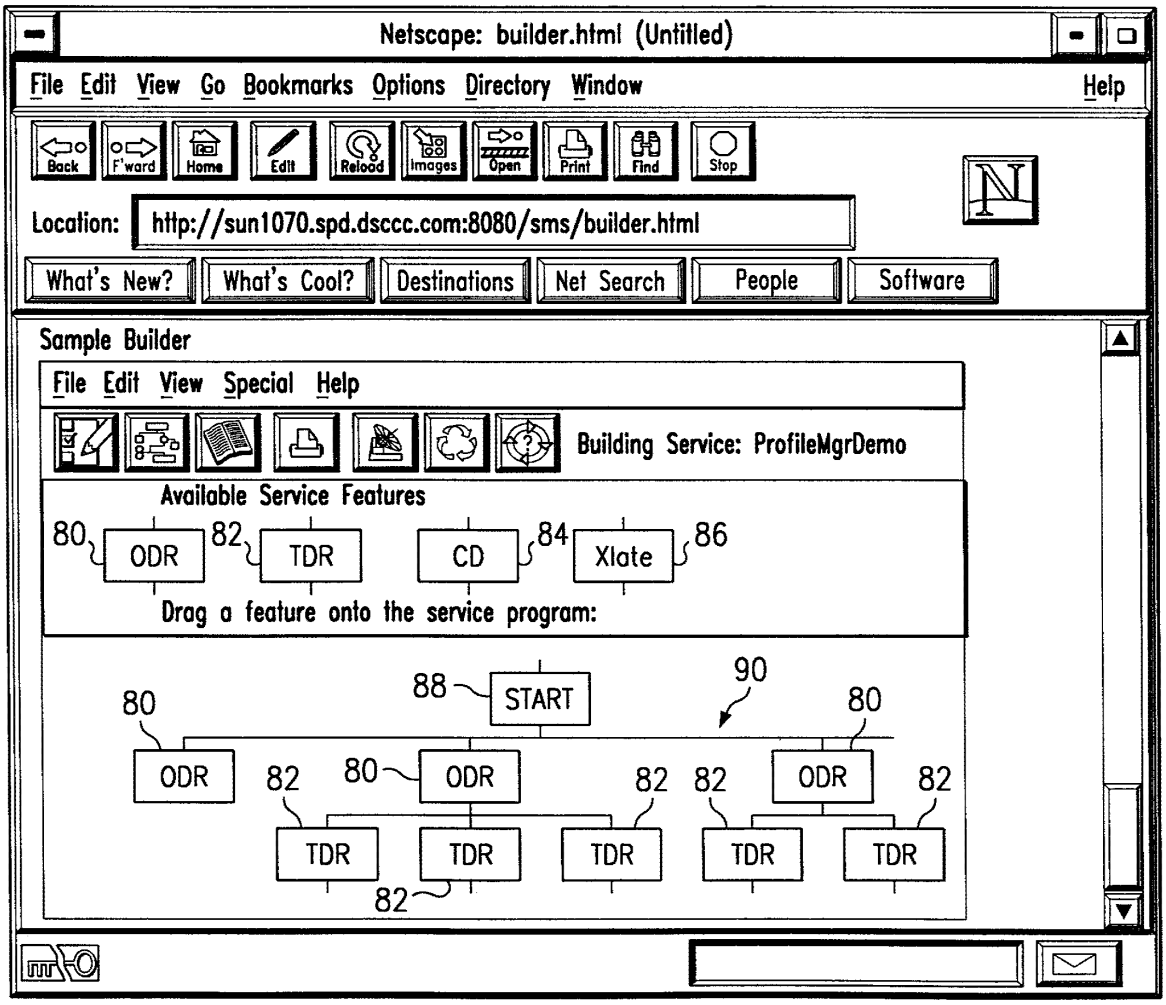
Netscape: builder.html (Untitled)
File Edit View Go Bookmarks Options Directory Window Help
Back F'ward Home Edit Reload Images Open Print Find Stop
Location: http://sun1070.spd.dsccc.com:8080/sms/builder.html
What's New? What's Cool? Destinations Net Search People Software
Sample Builder
File Edit View Special Help
Building Service: ProfileMgrDemo
Available Service Features
80 ODR 82 TDR CD 84 Xlate 86
Drag a feature onto the service program:
88 START
90
80 ODR
82 TDR
80 ODR
82 TDR
82 TDR
80 ODR
82 TDR
82 TDR
82

FIG. 8A

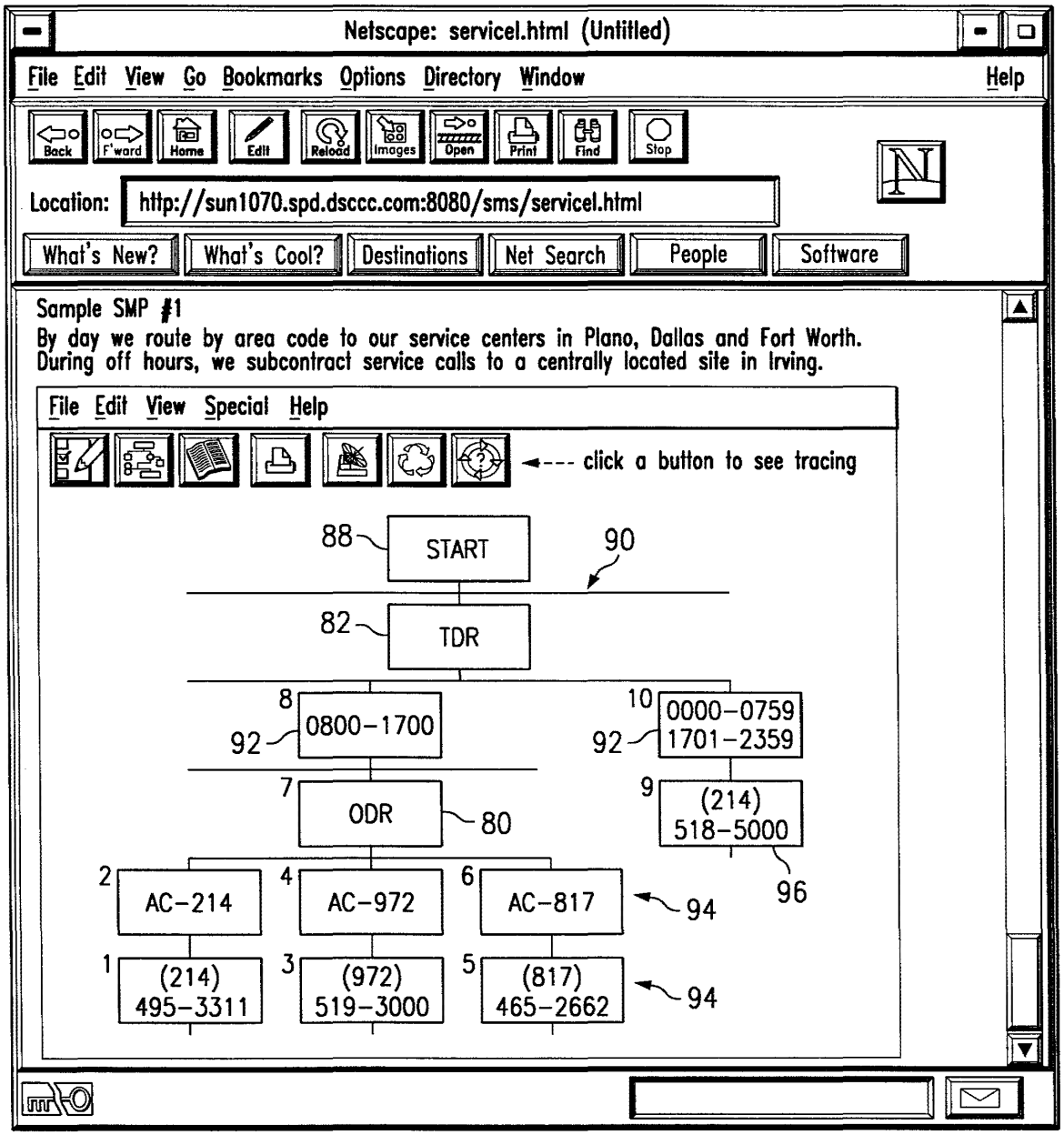
Netscape: servicel.html (Untitled)
File Edit View Go Bookmarks Options Directory Window Help
Back F'ward Home Edit Reload Images Open Print Find Stop
Location: http://sun1070.spd.dsccc.com:8080/sms/servicel.html
What's New? What's Cool? Destinations Net Search People Software
Sample SMP #1
By day we route by area code to our service centers in Plano, Dallas and Fort Worth.
During off hours, we subcontract service calls to a centrally located site in Irving.
File Edit View Special Help
click a button to see tracing
88
START
90
82
TDR
8
92
0800-1700
10
92
0000-0759
1701-2359
7
ODR
80
9
(214)
518-5000
96
2
AC-214
4
AC-972
6
AC-817
94
1
(214)
495-3311
3
(972)
519-3000
5
(817)
465-2662
94

FIG. 8B

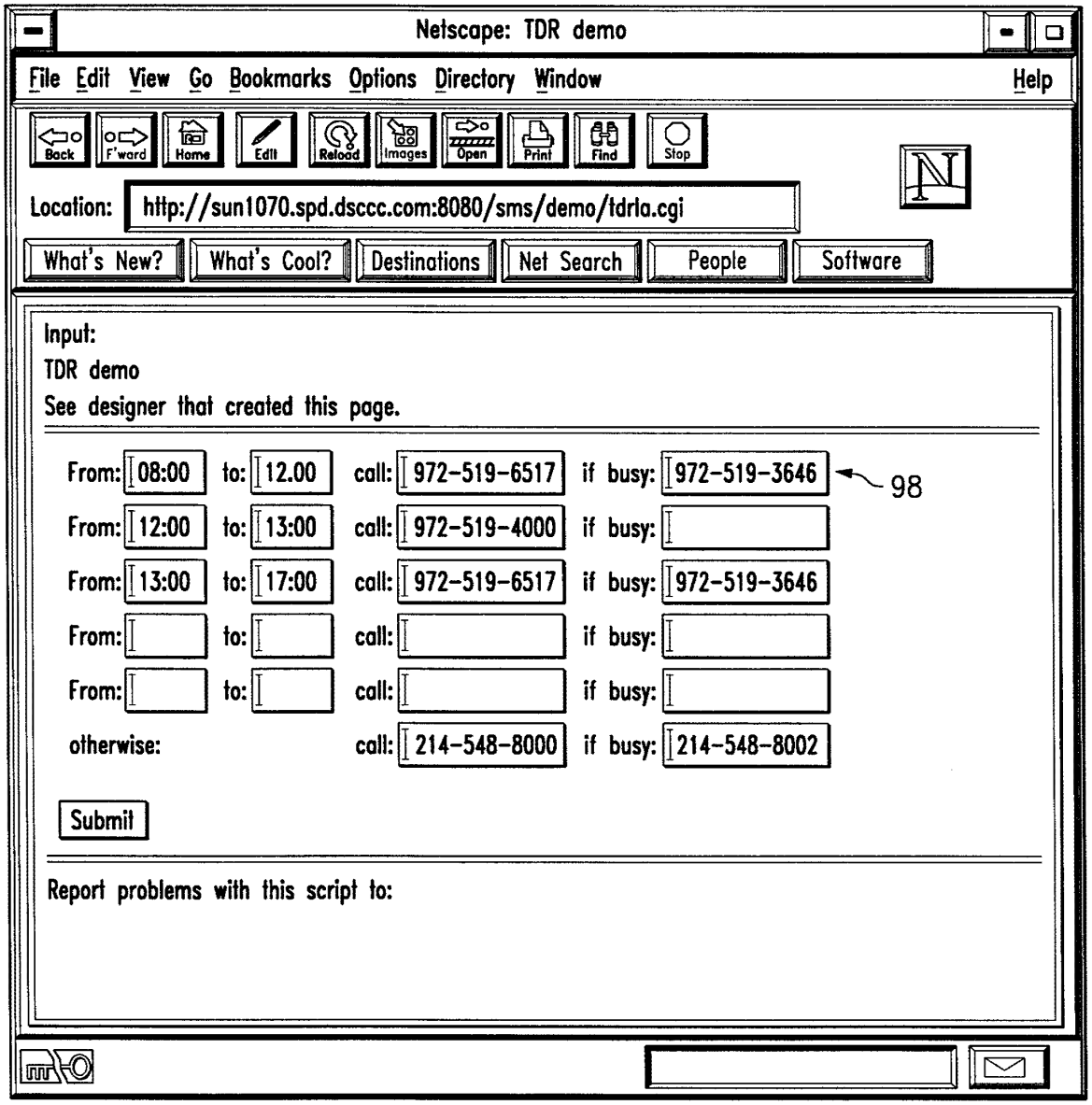
Netscape: TDR demo
File Edit View Go Bookmarks Options Directory Window Help
Back F'ward Home Edit Reload Images Open Print Find Stop
Location: http://sun1070.spd.dsccc.com:8080/sms/demo/tdrla.cgi
What's New? What's Cool? Destinations Net Search People Software
Input:
TDR demo
See designer that created this page.
From: 08:00 to: 12.00 call: 972-519-6517 if busy: 972-519-3646
98
From: 12:00 to: 13:00 call: 972-519-4000 if busy:
From: 13:00 to: 17:00 call: 972-519-6517 if busy: 972-519-3646
From: to: call: if busy:
From: to: call: if busy:
otherwise: call: 214-548-8000 if busy: 214-548-8002
Submit
Report problems with this script to:

FIG. 8c

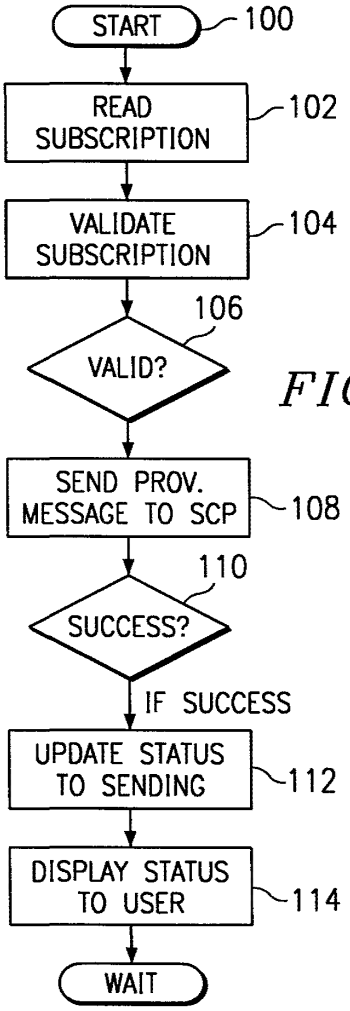

FIG. 9

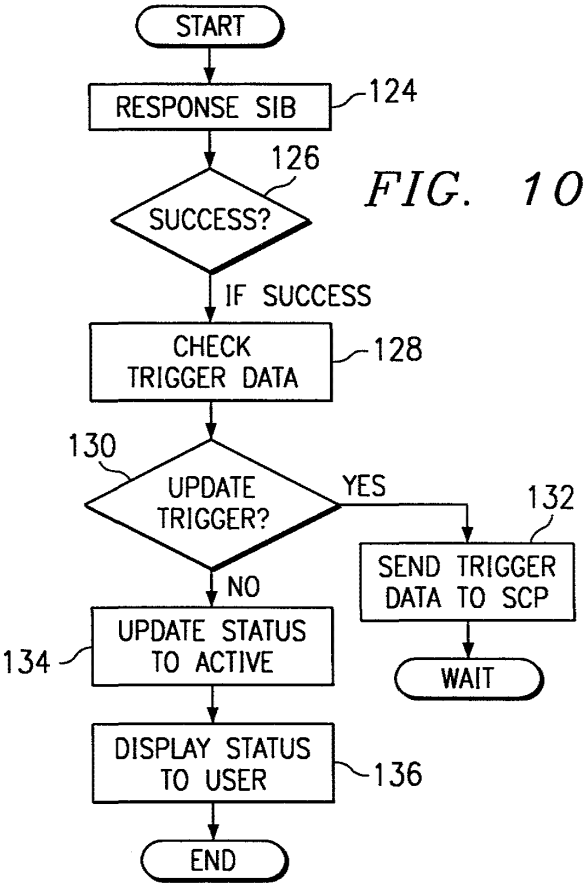

FIG. 10

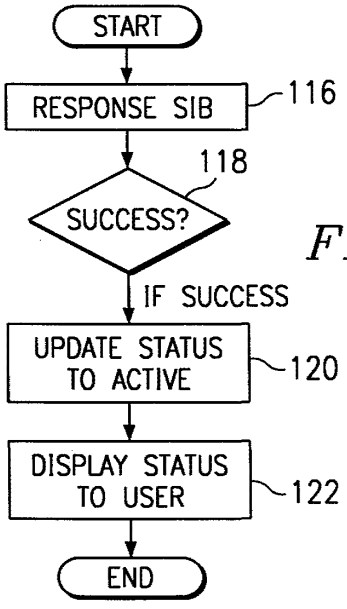

FIG. 11

INTERNATIONAL SEARCH REPORT

Inte ional Application No
PCT/US 98/21058

A. CLASSIFICATION OF SUBJECT MATTER
IPC 6 H04Q3/00

According to International Patent Classification (IPC) or to both national classification and IPC

B. FIELDS SEARCHED

Minimum documentation searched (classification system followed by classification symbols)
IPC 6 H04Q H04M

Documentation searched other than minimum documentation to the extent that such documents are included in the fields searched

Electronic data base consulted during the international search (name of data base and, where practical, search terms used)

C. DOCUMENTS CONSIDERED TO BE RELEVANT

Category °	Citation of document, with indication, where appropriate, of the relevant passages	Relevant to claim No.
X	WO 94 05111 A (BELL COMMUNICATIONS RES) 3 March 1994 see page 1, paragraph 4 - page 3, paragraph 1 see page 33, paragraph 3 - page 35, paragraph 1 ---	1-5,13, 16,17,19
X	US 5 455 853 A (MAN SUSAN K ET AL) 3 October 1995 see column 1, line 55 - column 2, line 5 see column 17, line 36 - column 18, line 8 see column 6, line 35 - line 60 --- -/--	1-5

[X] Further documents are listed in the continuation of box C.

[X] Patent family members are listed in annex.

° Special categories of cited documents :

"A" document defining the general state of the art which is not considered to be of particular relevance

"E" earlier document but published on or after the international filing date

"L" document which may throw doubts on priority claim(s) or which is cited to establish the publication date of another citation or other special reason (as specified)

"O" document referring to an oral disclosure, use, exhibition or other means

"P" document published prior to the international filing date but later than the priority date claimed

"T" later document published after the international filing date or priority date and not in conflict with the application but cited to understand the principle or theory underlying the invention

"X" document of particular relevance; the claimed invention cannot be considered novel or cannot be considered to involve an inventive step when the document is taken alone

"Y" document of particular relevance; the claimed invention cannot be considered to involve an inventive step when the document is combined with one or more other such documents, such combination being obvious to a person skilled in the art.

"&" document member of the same patent family

Date of the actual completion of the international search	Date of mailing of the international search report
5 February 1999	15/02/1999

Name and mailing address of the ISA	Authorized officer
European Patent Office, P.B. 5818 Patentlaan 2 NL - 2280 HV Rijswijk Tel. (+31-70) 340-2040, Tx. 31 651 epo nl, Fax: (+31-70) 340-3016	Toussaint, F

1

Form PCT/ISA/210 (second sheet) (July 1992)

Bright House Networks - Ex. 1008, Page 1525

INTERNATIONAL SEARCH REPORT

Inte onal Application No
PCT/US 98/21058

C.(Continuation) DOCUMENTS CONSIDERED TO BE RELEVANT

Category °	Citation of document, with indication,where appropriate, of the relevant passages	Relevant to claim No.
A	FREGELIUS P: "NEUE DIENSTE UND ANWENDUNGEN DANK INTELLIGENTEM NETZ" TEC. DAS TECHNISCHE MAGAZIN VON ASCOM, no. 2, 1 January 1992, pages 16-20, XP000327453 see page 2 - page 3 ---	1-5
A	GENETTE M ET AL: "INTELLIGENT NETWORK: THE SERVICE CREATION ENVIRONMENT" COMMUTATION ET TRANSMISSION, vol. 17, no. 2, 1 January 1995, pages 13-20, XP000505610 ---	1,16
P,X	WO 97 44943 A (MATTILA ARI PEKKA ;HALME PETRI (FI); TOEHOENEN HARRI (FI); FINLAND) 27 November 1997 see page 5, line 17 - page 6, line 25 -----	1,2,8, 15,19,21

1

Form PCT/ISA/210 (continuation of second sheet) (July 1992)

Bright House Networks - Ex. 1008, Page 1526

INTERNATIONAL SEARCH REPORT

Information on patent family members

Int ional Application No
PCT/US 98/21058

Patent document cited in search report	Publication date	Patent family member(s)	Publication date
WO 9405111 A	03-03-1994	US 5463682 A	31-10-1995
		US 5511116 A	23-04-1996
		US 5442690 A	15-08-1995
		US 5455853 A	03-10-1995
		US 5450480 A	12-09-1995
		WO 9405112 A	03-03-1994
		US 5481601 A	02-01-1996
		US 5608789 A	04-03-1995
US 5455853 A	03-10-1995	WO 9405111 A	03-03-1994
		WO 9405112 A	03-03-1994
		US 5481601 A	02-01-1996
		US 5608789 A	04-03-1997
		US 5463682 A	31-10-1995
		US 5511116 A	23-04-1996
		US 5442690 A	15-08-1995
		US 5450480 A	12-09-1995
WO 9744943 A	27-11-1997	FI 964200 A	22-11-1997
		AU 2900297 A	09-12-1997

Bright House Networks - Ex. 1008, Page 1527

PCT WORLD INTELLECTUAL PROPERTY ORGANIZATION
International Bureau

INTERNATIONAL APPLICATION PUBLISHED UNDER THE PATENT COOPERATION TREATY (PCT)

(51) International Patent Classification 6 :
H04L 29/06

A2

(11) International Publication Number: **WO 99/35802**

(43) International Publication Date: 15 July 1999 (15.07.99)

(21) International Application Number: PCT/US99/00336

(22) International Filing Date: 7 January 1999 (07.01.99)

(30) Priority Data:

60/070,720	7 January 1998 (07.01.98)	US
60/075,123	13 February 1998 (13.02.98)	US
09/107,666	30 June 1998 (30.06.98)	US

(71) Applicant: MICROSOFT CORPORATION [US/US]; One Microsoft Way, Redmond, WA 98052–6399 (US).

(72) Inventors: WECKER, Dave; 23908 – 22nd Drive, S.E., Bothell, WA 98021 (US). DEO, Vinay; 16732 N.E. 35th Street, Bellevue, WA 98008 (US). MILLER, John, Mark; 8026 N.E. 122nd Place, Kirkland, WA 98034 (US). TUNIMAN, David; 23044 N.E. 61st Street, Redmond, WA 98053 (US). O'LEARY, Michael, J.; 22823 N.E. 54th Street, Redmond, WA 98053 (US).

(74) Agents: KELLY, Joseph, R. et al.; Westman, Champlin & Kelly, P.A., Suite 1600, International Centre, 900 2nd Avenue South, Minneapolis, MN 55402–3319 (US).

(81) Designated States: CA, JP, European patent (AT, BE, CH, CY, DE, DK, ES, FI, FR, GB, GR, IE, IT, LU, MC, NL, PT, SE).

Published
With international search report.
Before the expiration of the time limit for amending the claims and to be republished in the event of the receipt of amendments.

(54) Title: SYSTEM FOR DELIVERING DATA CONTENT OVER A LOW BIT RATE TRANSMISSION CHANNEL

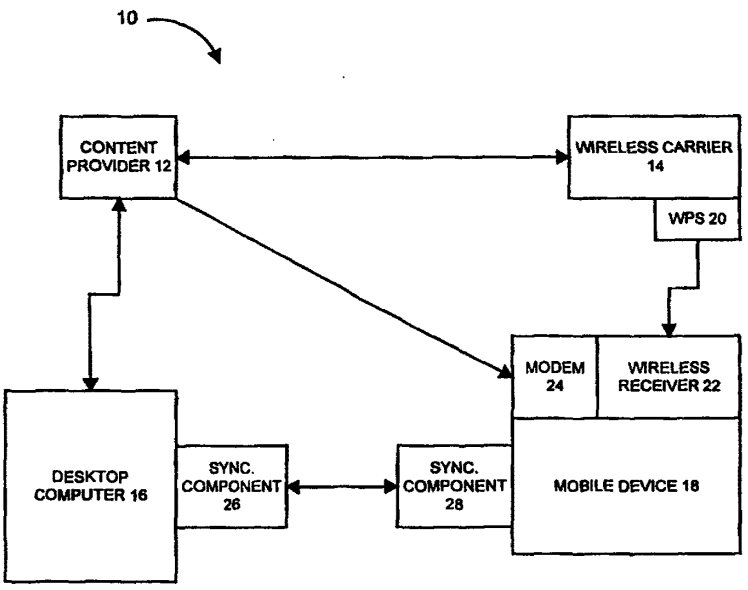

(57) Abstract

The present invention provides a system by which information content (250) is delivered to a mobile device (18). The web content (250) is divided into data (202) and script information (204). The script information (204) is used to operate on the data (202) to render the data (202) in a predetermined format.

FOR THE PURPOSES OF INFORMATION ONLY

Codes used to identify States party to the PCT on the front pages of pamphlets publishing international applications under the PCT.

AL	Albania	**ES**	Spain	**LS**	Lesotho	**SI**	Slovenia
AM	Armenia	**FI**	Finland	**LT**	Lithuania	**SK**	Slovakia
AT	Austria	**FR**	France	**LU**	Luxembourg	**SN**	Senegal
AU	Australia	**GA**	Gabon	**LV**	Latvia	**SZ**	Swaziland
AZ	Azerbaijan	**GB**	United Kingdom	**MC**	Monaco	**TD**	Chad
BA	Bosnia and Herzegovina	**GE**	Georgia	**MD**	Republic of Moldova	**TG**	Togo
BB	Barbados	**GH**	Ghana	**MG**	Madagascar	**TJ**	Tajikistan
BE	Belgium	**GN**	Guinea	**MK**	The former Yugoslav Republic of Macedonia	**TM**	Turkmenistan
BF	Burkina Faso	**GR**	Greece			**TR**	Turkey
BG	Bulgaria	**HU**	Hungary	**ML**	Mali	**TT**	Trinidad and Tobago
BJ	Benin	**IE**	Ireland	**MN**	Mongolia	**UA**	Ukraine
BR	Brazil	**IL**	Israel	**MR**	Mauritania	**UG**	Uganda
BY	Belarus	**IS**	Iceland	**MW**	Malawi	**US**	United States of America
CA	Canada	**IT**	Italy	**MX**	Mexico	**UZ**	Uzbekistan
CF	Central African Republic	**JP**	Japan	**NE**	Niger	**VN**	Viet Nam
CG	Congo	**KE**	Kenya	**NL**	Netherlands	**YU**	Yugoslavia
CH	Switzerland	**KG**	Kyrgyzstan	**NO**	Norway	**ZW**	Zimbabwe
CI	Côte d'Ivoire	**KP**	Democratic People's Republic of Korea	**NZ**	New Zealand		
CM	Cameroon			**PL**	Poland		
CN	China	**KR**	Republic of Korea	**PT**	Portugal		
CU	Cuba	**KZ**	Kazakstan	**RO**	Romania		
CZ	Czech Republic	**LC**	Saint Lucia	**RU**	Russian Federation		
DE	Germany	**LI**	Liechtenstein	**SD**	Sudan		
DK	Denmark	**LK**	Sri Lanka	**SE**	Sweden		
EE	Estonia	**LR**	Liberia	**SG**	Singapore		

SYSTEM FOR DELIVERING DATA CONTENT OVER A LOW BIT RATE TRANSMISSION CHANNEL

BACKGROUND OF THE INVENTION

The present invention relates to personal mobile computing devices commonly known as mobile devices. More particularly, the present invention relates to a system and method for delivering and receiving information on a mobile device.

Mobile devices are small electronic computing devices often referred to as personal digital assistants. Many such mobile devices are hand held devices, or palm-size devices, which comfortably fit within the hand. One commercially available mobile device is sold under the trade name HandHeld PC (or H/PC) having software provided by Microsoft Corporation of Redmond, Washington.

Generally, the mobile device includes a processor, random access memory (RAM), and an input device such as a keyboard and a display. The keyboard can be integrated with the display, such as where the keyboard is incorporated as a touch sensitive display. A communication interface is optionally provided and is commonly used to communicate with a desktop computer. A replaceable or rechargeable battery powers the mobile device. Optionally, the mobile device can receive power from an external power source that overrides or recharges the built-in battery.

In some prior applications, the mobile device is used in conjunction with a desktop computer. For example, the user of the mobile device may also have access to, and use, a desktop computer at work or at home, or both. The user typically runs the same types of applications on both the desktop computer and on

the mobile device. Thus, it is quite advantageous for the mobile device to be designed to be coupled to the desktop computer to exchange information with, and share information with, the desktop computer.

Another technique for providing information to such mobile devices is through a wireless transmission link. Such information can include electronic mail or news, weather, sports, traffic and local event information. The information is typically obtained from a desktop computer connected to the Internet and delivered over a wired connection. However, it may be desirable to deliver such information over a wireless connection as well. A wireless receiver on the mobile device can act to receive information as it is being sent to the mobile device.

There is presently no reasonable way to deliver push style content (such as hypertext mark-up language (HTML) content provided on a global network such as the internet and world wide web) to such devices in a wireless manner and in an open and available architecture. The bit rate of conventional wireless channels is very low. Thus, the delivery of very large content (such as HDML content) is highly impractical.

One conventional type of approach to delivering such information is to rewrite the content into a device friendly format, such as HTML. The content is then obtained over a pull-style model. Another approach currently being used to deliver information via a wireless medium is a closed model. In a closed model, a content provider can only provide content which is written in a format suitable for receipt by a specific device implementing a specific type of

software. This means that the vast majority of web content is unavailable for viewing on such devices.

SUMMARY OF THE INVENTION

The present invention provides a system by which information content is delivered to a mobile device. The web content is divided into data and script information. The script information is used to operate on the data to render the data in a predetermined format.

BRIEF DESCRIPTION OF THE DRAWINGS

FIG. 1 is a simplified block diagram illustrating one embodiment of a mobile device in a system in accordance with the present invention.

FIG. 2 is a more detailed block diagram of one embodiment of a mobile device shown in FIG. 1.

FIG. 3 is a simplified pictorial illustration of one emboidment of the mobile device shown in FIG. 2.

FIG. 4 is a simplified pictorial illustration of another embodiment of the mobile device shown in FIG. 2.

FIG. 5 is a block diagram of one embodiment of a desktop computer in accordance with one aspect of the present invention.

FIG. 6 is a flow diagram illustrating the operation of a mobile device in accordance with one aspect of the present invention.

FIG. 7 illustrates a general data structure of a packet transmitted to the mobile device in accordance with one aspect of the present invention.

FIG. 8 is a more detailed flow diagram illustrating a routing and translator layer and the preparation of packets for transmission in accordance with one aspect of the present invention.

DETAILED DESCRIPTION OF THE PREFERRED EMBODIMENTS

FIG. 1 illustrates a system 10 in which the present invention is illustratively implemented. System 10 includes content provider 12, wireless carrier 14, desktop computer 16 and mobile device 18. Content provider 12 provides any suitable type of data from a database or other data source. For example, content provider 12 is discussed hereinafter as a provider of internet world wide web content. In the preferred embodiment, the content is provided in a standard format, such as HTML, JPEG, GIF, WAV, etc. The web content is also preferably described in a channel definition format (CDF) file. A single portion of content (such as a web page or a web site) is referred to herein as a mobile channel.

A mobile channel is a self describing web site that contains all the information necessary for efficient download of web content to mobile device 18. Three components are provided in a preferable mobile channel. The components include a channel definition format (CDF) file, a set of script files to render the channel, and a set of data files to be rendered. The CDF files are described in greater detail in co-pending U.S. patent application serial number _____, entitled CHANNEL DEFINITION ARCHITECTURE EXTENSION, and hereby fully incorporated by reference. Briefly, the CDF is an inventory of content contained on the mobile channel.

The script files contain script which defines templates which specify the appearance of the data on the screen of mobile device 18. Scripts are preferably written in visual basic script (VBS).

The data files correspond to one or more script

files and include data which is indicative of the substantive content of the channel to be rendered. The data is packaged in small and simple text files. All of this information is used to define web content.

Wireless carrier 14 is described in greater detail later in the application. Briefly, however, wireless carrier 14 is configured to receive web content from the web content provider 12 via dial-up or direct internet connection, or a network connection. Wireless carrier 14 also includes a wireless push server 20. Server 20 splits the content received from content provider 12 into pieces which are compatible with the particular type of transport being used by wireless carrier 14. For instance, server 20 may split the data such that it conforms to maximum packet size constraints, character set requirements, etc. for the channel type or transport type being used. Prior to transmission, the data is preferably translated to a different form. As is described in greater detail later in the application, such translation may include compression, encryption, encoding and then packaging. Once the data has been split appropriately such that it conforms to the transport constraints, the data is then configured for transmission over the air through a wireless network (such as through a paging channel) to be received directly on mobile device 18. The transmitted data is received by a wireless receiver and driver component 22 on mobile device 18 where the data is prepared for use by mobile device 18.

Mobile device 18 also preferably includes a modem 24. Thus, rather than being transmitted through wireless carrier 14, the web content can be

transmitted directly from web content provider 12 through a direct dial-up modem connection to mobile device 18.

Desktop computer 16 will also be described in greater detail later in the specification. Briefly, however, desktop computer 16 is preferably provided with a standard web browser, such as Internet Explorer 4.0 commercially available from the Microsoft Corporation of Redmond, Washington. That being the case, the users of desktop 16 can preferably subscribe to channels in a standard fashion which provide the user with certain channel content which can be browsed off-line or on-line. Desktop computer 16 is preferably provided with a loadable transport (in accordance with one aspect of the present invention) that accesses the script files and acts on the corresponding data file (in accordance with the script) to render the content where desktop computer 16 renders the data. Desktop computer 16, through the transport, can periodically retrieve or receive new and updated script, data and CDF files either for further transmission to mobile device 18 or simply for rendering the data. The script, data and CDF files can be transmitted either together or independently of one another. Since scripting files typically need updating much less frequently than the data files, this provides the user with the ability to view the web content on the desktop (off-line) while requiring only small amounts of bandwidth for incremental updating of the data files.

Desktop computer 16 also preferably includes synchronization component 26. Briefly, synchronization component 26 is configured to interact

with a similar synchronization component 28 on mobile device 18 such that files which are the subject of synchronization can be synchronized from desktop computer 16 to mobile device 18, or vice versa. Once synchronized, both files (those on computer 16 and mobile device 18) contain up to date information.

More specifically, mobile device 18, in the preferred embodiment, can be synchronized with either desktop computer 16, or another mobile device 18, or both. In that instance, properties of objects stored in an object store on mobile device 18 are similar to properties of other instances of the same object stored in an object store on desktop computer 16 or another mobile device 18. Thus, for example, when a user changes one instance of an object stored in an object store on desktop computer 16, the second instance of that object in the object store of mobile device 18 is updated the next time mobile device 18 is connected to desktop computer 16 so that both instances of the same object contain up-to-date data. This is referred to as synchronization.

In order to accomplish synchronization, synchronization components 26 and 28 run on both mobile device 18 and desktop computer 16 (or another mobile device 18). The synchronization components communicate with one another through well defined interfaces to manage communication and synchronization.

Mobile device 18 is also preferably provided with a script interpreter which, in one preferred embodiment, is the same as or similar to the loadable transport on desktop computer 16. Such a transport may be, for example, a down-sized visual basic

interpreter, which receives and interprets the formatting script. The script is associated with a certain data file (typically a text file) that holds the raw data for the web content. Thus, the script interpreter operates on the data associated with a given script to provide a rendering of the web content to the user of mobile device 18.

By separating the script from the data in the web content, web content can be transmitted to mobile device 18 over very low bit rate channels. The script will only typically need to be transmitted very infrequently. Also, since an individual file is typically much smaller than the script files, the data can be updated quite frequently, giving the user of mobile device 18 updated web content information, without transmitting new script. Thus, the separation of the script and data allows the transmission of web content information in a very efficient manner over low bit rate channels.

It is worth noting that, in the preferred embodiment, while mobile device 18 can be coupled to desktop computer 16, it can be also coupled to another mobile device 18. This connection can be made using any suitable, and commercially available, communication link and using a suitable communications protocol. For instance, in one preferred embodiment, mobile device 18 communicates with either desktop computer 16 or another mobile device 18 with a physical cable which communicates using a serial communications protocol. Other communication mechanisms are also contemplated by the present invention, such as infra-red (IR) communication or other suitable communication mechanisms.

FIG. 2 is a more detailed block diagram of mobile device 18. Mobile device 18 preferably includes microprocessor 30, memory 32, input/output (I/O) components 34, desktop communication interface 36 wireless receiver 37 and antenna 39. In a preferred embodiment, these components of mobile 10 are coupled for communication with one another over a suitable bus 38.

Memory 32 is preferably implemented as non-volatile electronic memory such as random access memory (RAM) with a battery back-up module (not shown) such that information stored in memory 32 is not lost when the general power to mobile device 18 is shut down. A portion of memory 32 is preferably allocated as addressable memory for program execution, while another portion of memory 32 is preferably used for storage, such as to simulate storage on a disc drive.

Memory 32 includes operating system 40, an application program 42 (such as a personal information manager or PIM) as well as an object store 44. During operation, operating system 40 is preferably executed by processor 30 from memory 32. Operating system 40, in one preferred embodiment, is a Windows CE brand operating system commercially available from Microsoft Corporation. The operating system 40 is preferably designed for mobile devices, and implements database features which can be utilized by PIM 42 through a set of exposed application programming interfaces and methods. The objects in object store 44 are preferably maintained by PIM 42 and operating system 40, at least partially in response to calls to the exposed application programming interfaces and methods.

I/O components 34, in one preferred embodiment, are provided to facilitate input and output operations from a user of mobile device 18. I/O components 34 are described in greater detail with respect to FIGS. 3 and 4.

Desktop communication interface 36 is optionally provided as any suitable communication interface. Interface 36 is preferably used to communicate with desktop computer 16, content provider 12, wireless carrier 14 and optionally another mobile device 18, as described with respect to FIG. 1. Thus, communication interface 36 preferably includes synchronization components 28 for communicating with desktop computer 16 and modem 24 for communicating with content provider 12. Wireless receiver and driver 22 are used for communicating with wireless carrier 14.

FIG. 3 is a simplified pictorial illustration of one preferred embodiment of a mobile device 10 which can be used in accordance with the present invention. Mobile device 10, as illustrated in FIG. 3, can be a desktop assistant sold under the designation H/PC having software provided by the Microsoft Corporation. In one preferred embodiment, mobile device 18 includes a miniaturized keyboard 43, display 45 and stylus 46. In the embodiment shown in FIG. 3, display 45 is a liquid crystal display (LCD) which uses a contact sensitive display screen in conjunction with stylus 46. Stylus 46 is used to press or contact the display 45 at designated coordinates to accomplish certain user input functions. Miniaturized keyboard 43 is preferably implemented as a miniaturized alpha-numeric keyboard, with any suitable and desired function keys which are also provided for accomplishing certain user

input functions.

FIG. 4 is another simplified pictorial illustration of the mobile device 18 in accordance with another preferred embodiment of the present invention. Mobile device 18, as illustrated in FIG. 4, includes some items which are similar to those described with respect to FIG. 3, and are similarly numbered. For instance, mobile device 18, as shown in FIG. 4, also includes touch sensitive screen 45 which can be used, in conjunction with stylus 46, to accomplish certain user input functions. It should be noted that the display 45 for the mobile device as shown in FIGS. 3 and 4 can be the same size as one another, or different sizes from one another, but would typically be much smaller than a conventional display used with a desktop computer. For example, displays 45 shown in FIGS. 3 and 4 may be defined by a matrix of only 240X320 coordinates, or 160X160 coordinates, or any other suitable size.

The mobile device 18 shown in FIG. 4 also includes a number of user input keys or buttons (such as scroll buttons 47) which allow the user to scroll through menu options or other display options which are displayed on display 45, or which allow the user to change applications, without contacting display 45. In addition, the mobile device 18 also shown in FIG. 4 also preferably includes a power button 49 which can be used to turn on and off the general power to the mobile device 18.

It should also be noted that, in the embodiment illustrated in FIG. 4, mobile device 18 includes a hand writing area 51. Hand writing area 51 can be used in conjunction with stylus 46 such that the user

can write messages which are stored in memory 42 for later use by the mobile device 18. In one illustrative embodiment, the hand written messages are simply stored in hand written form and can be recalled by the user and displayed on the display screen 45 such that the user can review the hand written messages entered into the mobile device 18. In another preferred embodiment, mobile device 18 is provided with a character recognition module such that the user can enter alpha-numeric information into mobile device 18 by writing that alpha-numeric information on area 51 with stylus 46. In that instance, character recognition module in the mobile device 18 recognizes the alpha-numeric characters and converts the characters into computer recognizable alpha-numeric characters which can be used by the application programs 42 in mobile device 18.

FIG. 5 and the related discussion are intended to provide a brief, general description of a suitable desktop computer 16 in which portions of the invention may be implemented. Although not required, the invention will be described, at least in part, in the general context of computer-executable instructions, such as program modules, being executed by a personal computer 16 or mobile device 18. Generally, program modules include routine programs, objects, components, data structures, etc. that perform particular tasks or implement particular abstract data types. Moreover, those skilled in the art will appreciate that desktop computer 16 may be implemented with other computer system configurations, including multiprocessor systems, microprocessor-based or programmable consumer electronics, network PCs, minicomputers, mainframe

computers, and the like. The invention may also be practiced in distributed computing environments where tasks are performed by remote processing devices that are linked through a communications network. In a distributed computing environment, program modules may be located in both local and remote memory storage devices.

With reference to FIG. 5, an exemplary system for implementing desktop computer 16 includes a general purpose computing device in the form of a conventional personal computer 16, including processing unit 48, a system memory 50, and a system bus 52 that couples various system components including the system memory 50 to the processing unit 48. The system bus 52 may be any of several types of bus structures including a memory bus or memory controller, a peripheral bus, and a local bus using any of a variety of bus architectures. The system memory 50 includes read only memory (ROM) 54 a random access memory (RAM) 55. A basic input/output system (BIOS) 56, containing the basic routine that helps to transfer information between elements within the desktop computer 16, such as during start-up, is stored in ROM 54. The desktop computer 16 further includes a hard disk drive 57 for reading from and writing to a hard disk (not shown) a magnetic disk drive 58 for reading from or writing to removable magnetic disk 59, and an optical disk drive 60 for reading from or writing to a removable optical disk 61 such as a CD ROM or other optical media. The hard disk drive 57, magnetic disk drive 58, and optical disk drive 60 are connected to the system bus 52 by a hard disk drive interface 62, magnetic disk drive interface 63, and an optical drive interface 64,

respectively. The drives and the associated computer-readable media provide nonvolatile storage of computer readable instructions, data structures, program modules and other data for the desktop computer 16.

Although the exemplary environment described herein employs a hard disk, a removable magnetic disk 59 and a removable optical disk 61, it should be appreciated by those skilled in the art that other types of computer readable media which can store data that is accessible by a computer, such as magnetic cassettes, flash memory cards, digital video disks (DVDs), Bernoulli cartridges, random access memories (RAMs), read only memory (ROM), and the like, may also be used in the exemplary operating environment.

A number of program modules may be stored on the hard disk, magnetic disk 59, optical disk 61, ROM 54 or RAM 55, including an operating system 65, one or more application programs 66 (which may include PIMs), other program modules 67 (which may include synchronization component 26), and program data 68. A user may enter commands and information into the desktop computer 16 through input devices such as a keyboard 70, pointing device 72 and microphone 74. Other input devices (not shown) may include a joystick, game pad, satellite dish, scanner, or the like. These and other input devices are often connected to the processing unit 48 through a serial port interface 76 that is coupled to the system bus 52, but may be connected by other interfaces, such as a sound card, a parallel port, game port or a universal serial bus (USB). A monitor 77 or other type of display device is also connected to the system bus 52 via an interface, such as a video adapter 78.

In addition to the monitor 77, desktop computers may typically include other peripheral output devices such as speaker 75 and printers.

The desktop computer 16 may operate in a networked environment using logic connections to one or more remote computers (other than mobile device 18), such as a remote computer 79. The remote computer 79 may be another personal computer, a server, a router, a network PC, a peer device or other network node, and typically includes many or all of the elements described above relative to desktop computer 16, although only a memory storage device 80 has been illustrated in FIG. 4. The logic connections depicted in FIG. 4 include a local area network (LAN) 81 and a wide area network (WAN) 82. Such networking environments are commonplace in offices, enterprise-wide computer network intranets and the Internet.

When used in a LAN networking environment, the desktop computer 16 is connected to the local area network 81 through a network interface or adapter 83. When used in a WAN networking environment, the desktop computer 16 typically includes a modem 84 or other means for establishing communications over the wide area network 82, such as the Internet. The modem 84, which may be internal or external, is connected to the system bus 52 via the serial port interface 76. In a network environment, program modules depicted relative to desktop computer 16, or portions thereof, may be stored in the remote memory storage devices. It will be appreciated that the network connections shown are exemplary and other means of establishing a communications link between the computers may be used.

Desktop computer 16 runs operating system 65 that

is typically stored in non-volatile memory 54 and executes on the processor 48. One suitable operating system is a Windows brand operating system sold by Microsoft Corporation, such as Windows 95 or Windows NT, operating systems, other derivative versions of Windows brand operating systems, or another suitable operating system. Other suitable operating systems include systems such as the Macintosh OS sold from Apple Corporation, and the OS/2 Presentation Manager sold by International Business Machines (IBM) of Armonk, New York. Application programs are preferably stored in program module 67, in volatile memory or non-volatile memory, or can be loaded into any of the components shown in FIG. 5 from a floppy diskette 59, CDROM drive 61, downloaded from a network via network adapter 83, or loaded using another suitable mechanism.

A dynamically linked library (DLL), comprising a plurality of executable functions is associated with PIMs in the memory for execution by processor 48. Interprocessor and intercomponent calls are facilitated using the component object model (COM) as is common in programs written for Microsoft Windows brand operating systems. Briefly, when using COM, a software component such as a DLL has a number of interfaces. Each interface exposes a plurality of methods, which can be called individually to utilize different services offered by the software component. In addition, interfaces are provided such that methods or functions can be called from other software components which optionally receive and return one or more parameter arguments.

In general, the DLL associated with the

particular PIM is designed specifically to work in conjunction with that PIM and to expose desktop synchronization interfaces that function as described in more detail above according to a synchronization protocol. The DLL, in turn, calls interfaces exposed by the PIM in order to access data representing individual properties of objects maintained in an object store. The object store 6, of course, can reside in any one of the suitable memory components described with respect to FIG. 4.

ARCHITECTURE BLOCK DIAGRAM

FIG. 6 is a block diagram illustrating the functional architecture of mobile device 18. FIG. 6 shows similar items to those previously shown in the specification. Similar items are similarly numbered. FIG. 6 illustrates that mobile device 18 receives web content information either via synchronization component 26, wireless receiver (radio receiver and driver) 22 or modem 24. In any of those cases, the CDF files as well as the script templates and data files, indicated by blocks 202 and 204 are eventually provided to cache memory 206. Where the web content information is received through synchronization component 26, the script templates and data files may are not be encrypted or encoded or otherwise formatted in the same fashion as they are for transmission over a wireless or modem channel. Therefore, the script templates 204 and data files 202 are provided directly to cache manager 208. Cache manager 208 receives the script templates and data files and provides them to cache memory 206. Cache manager 208 includes memory manipulation and timing components as well as data transfer components, which are suitable for

transferring the script templates and data files to a particular location in cache memory 206, and to track that location.

If, on the other hand, the web content is received over wireless receiver and driver 22 or modem 24, additional processing steps must be undertaken prior to caching the data. Wireless receiver and driver 22 is a physical layer that receives and filters messages and generates wake-up events to mobile device 18. In one preferred embodiment, as is described later with respect to FIG. 8, the information transmitted is first translated (such as compressed, encrypted, encoded and packaged) before transmission. Thus, the data must be translated back to its original form prior to further use by mobile device 18. Therefore, the data is first provided to message router 210. Message router 210 acts to record the message and route the received message to a translation layer 209. In FIG. 6, translation layer 209 includes unpackager and joiner component 212, a group of additional translators collectively labeled 214 and a further routing component 216.

Unpackager and joiner block 212 acts to receive, unpack and order a group of packets being transmitted. The unpackager rejoins packets of any long messages which were split up by wireless carrier 15. The ordered data is provided to translation components 214.

Translation components 214 act to reformat or translate the data into appropriate form to be handled by content handler 216. For example, once the packets which comprise a message have been unpacked and rejoined by unpacker and joiner 212, translation

components 214 may typically decompress, decrypt and decode those packets.

Content handler 216 delivers the unpacked, joined and translated message to the appropriate registered destination (i.e., to the appropriate application or other functional block) on mobile device 18. In the embodiment illustrated in FIG. 5, content handler 216 provides the information to cache manager 208 which stores it in cache 206.

When the user wishes to off-line browse the web content stored in cache 206, the user launches an appropriate application program indicated by channel browser block 218 in FIG. 5. Channel browser 218 preferably generates suitable user interfaces on display 45 which provide the user with the ability to choose a certain channel to be viewed.

Channel browser 218 is configured to interact with a loadable transport 220 which is, in turn, coupled to cache manager 208. In response to the user requesting to view information provided via the chosen channel, loadable transport 220 requests cache manager 208 to retrieve the corresponding web content information (in the form of script templates and data files) from cache 206. The desired script templates 204 and data files 202 are provided from cache manager 208 to loadable transport 220.

The script interpreter in transport 220 is preferably a visual basic script interpreter which interprets script templates 204 and acts on data files 202 to provide a desired rendering of the web content. In the embodiment illustrated in FIG. 5, the web content is rendered as a conventional hypertext mark-up language (HTML) page 224. Loadable transport 220

then provides the HTML page rendering to channel browser 218 for viewing by the user of mobile device 18 on display 45.

INFORMATION LOGGING

One aspect of the present invention enables logging of desired information for use by content provider 12. In other words, by providing an entry in the CDF file, the content providers can tag certain items which they want to track (i.e., they can tag certain items for which they would like to know when, and for how long, those items were viewed by any given user). The present invention implements this functionality.

For example, when the user launches channel browser 218, and requests information from loadable transport 220, loadable transport 220 determines whether the requested information includes the appropriate CDF tag indicating that the content provider wishes to log information regarding the time and duration which the information was viewed. If so, loadable transport 220 logs information which is representative of the time and duration that the information was viewed by the user. This information is stored in cache 206 in a location which corresponds to that particular web content information.

The next time mobile device 18 is synchronized with desktop computer 16, not only is mobile device 18 updated with the current web content received by desktop computer 16, but desktop computer 16 is updated with the current logging information maintained by mobile device 18. Similarly, the next time the browser on desktop computer 16 accesses the appropriate web content from content provider 12, the

logging information is transmitted from desktop computer 16 to content provider 12. In one preferred embodiment, since the browser on desktop computer 16 is Internet Explorer 4.0, logging information which has been synchronized to desktop computer 16 is transmitted to content provider 12 when the scheduler of Internet Explorer 4.0 is next invoked on desktop computer 16.

DATA STRUCTURE AND FILTERING

FIG. 7 illustrates one embodiment of a packet of web content data received by radio receiver and driver 10. The radio receiver can preferably receive messages of substantially any format. Many different types of header formats can be defined for receipt by the radio. FIG. 7 gives but one illustrative type of packet format.

Packet 230 preferably includes a plurality of portions, such as radio transport header 232, group and topic filtering bytes 234, routing header 236 and data 238. The radio transport header 232 preferably includes address information. The address information is an identifier used to send a radio message to radio receiver 22 (or any other similar type of radio card). For example, in one common commercially available paging transmission protocol, the address information in radio transport header 232 comprises a capcode. The capcode refers to a storage location on the physical hardware radio card device 22 that stores addressing information. The radio transport header 232, in one preferred embodiment, supports sixteen different addresses. Radio receiver and driver 22 filters and discards any messages which do not match any of the addresses. If a match is observed, then

radio receiver 22 has detected a message potentially addressed to it, and must receive and further process the message. The message is then passed to message router 210 which determines, in conjunction with translation layer 209, which components on the mobile device 18 are necessary to process the message.

Group and topic filtering bytes 234 are also preferably provided. A group, as referred to herein, is a subclass of an address that is used in accordance with the present invention to extend the filtering capability of an address. Further, a topic is a subclass of a group, which is also provided to extend the filtering capability of the address and group information.

It should be noted that messages arriving at radio receiver and driver 22 with an appropriate address may not have group and topic filtering bytes 234 pre-appended thereto. If those bytes are present, however, the driver in radio receiver and driver 22 operates to filter the message based on the group and topic filtering bytes.

The driver in radio receiver and driver 22 implements logic which first examines packet 230 to determine whether any group and topic filtering bytes 234 are included in packet 230. In a preferred embodiment, the driver in radio receiver and driver 22 supports a library which includes a function AnalyzeMessage(). The AnalyzeMessage function isolates service group codes and other information in the incoming message. If group and topic filtering bytes are present, then the group and topic filtering functions must be performed.

In the preferred embodiment, mobile device 18

includes a memory which contains a group table as described in greater detail in the above-incorporated applications. Briefly, the group table contains entries of service groups, each of which can be associated with any suitable address. Also, there can preferably be any suitable number of service groups associated with one address. Thus, in the preferred embodiment, group entries in the group table are sorted by address numbers, then by service group codes. The content of one preferred embodiment of the group table is set out in more detail in the above-referenced application.

If group or topic filtering bytes are detected, then the driver in radio receiver and driver 22 searches the group table to determine whether the service group code detected in packet 230 is listed in the group table, and whether it is active or inactive. If the service group code is not found in the table, or if it is found but it has been deactivated (or disabled) then the driver 22 discards the message and no further processing is done with respect to that message. However, if driver 22 determines that the group and topic filtering bytes 234 are included in the group table, then it is determined that the message was intended for that particular mobile device 18 and further processing continues.

Since all of this group and topic filtering is done at the level of driver 22, it occurs quite low in the protocol stack, or system architecture, of mobile device 18. Thus, filtering occurs early on in the process and the storage space required for the address and message is quite low. In addition, since the driver, itself, performs much of this filtering, the

group and topic filtering bytes 234 allow any application running on mobile device 18 to pass correct filtering information down to the group and topic tables for filtering at the level of driver 22. This significantly improves power consumption over previous designs because the messages do not need to be received, processed, and passed all the way up to the application level in the protocol stack, or architecture, of mobile device 18 before being filtered.

TRANSMISSION AND TRANSLATION ARCHITECTURE

FIG. 8 is a more detailed block diagram illustrating the transmission of data packets from wireless push server (WPS) component 20 to mobile device 18. Wireless push server 20 preferably includes web content cache 250, scheduler 252, translation layer 254, packager 256 and radio transmitter 258. Translation layer 254 preferably includes any suitable and desired number of translators. The translators are preferably used to operate on the web content (e.g., the data files, script files and CDF files) and provide the content, in a desired form, to packager 256 of radio transmitter 258 for transmission to mobile device 18. In the embodiment shown in FIG. 8, translation layer 254 includes compressor 260, encrypter 262 and encoder 264.

FIG. 8 also shows a portion of mobile device 18 in greater detail. Similar items are similarly numbered to those shown in FIG. 6. However, FIG. 8 illustrates translator layer 209 in greater detail. Translator layer 209 preferably includes a desired number and type of translators which operate to

reverse the translations performed in translator layer 254 on WPS 20. Thus, the embodiment shown in FIG. 8 includes unpackager 212, decoder 266, encrypter 268, and decompressor 270.

In operation, scheduler 252 periodically accesses web content cache 250 to provide updates, or additional web content, to mobile device 18. That information is first provided to translation layer 254. Each translator in translation layer 254 preferably performs the translation operation on the incoming data, and attaches an identifier, such as a header or a tag, to the data output thereby to indicate the type of translation performed. For instance, in the preferred emboidment, a portion of the web content which has been extracted from web content cache 250 by scheduler 252 (and prepared for translation layer 254 by scheduler 252) is first provided to compressor 260. Compressor 260 compresses the blob of information received thereby and attaches a four-byte header to identify the compression scheme used to compress the data. Compression is preferably done before encryption because pure text typically provides better compression than encrypted text.

Encrypter 262 receives the compressed data from compressor 260 and encrypts the output of compressor 260 and also attaches a four byte header to identify the encryption scheme used to encrypt the data. Encrypter 262 then provides encrypted data to encoder 264.

Encoder 264 encodes the output of encrypter 262 to convert the data stream into a stream consisting of characters suitable for transmission over the chosen wireless medium. For example, where the wireless

medium is a conventional paging channel, encoder 264 encodes the data into a stream consisting of printable ASCII characters only, so that it may be transmitted over the wireless link. Encoder 264 also attaches a four byte header to the data to identify the particular encoding scheme used to encode the data.

As described in greater detail above, packager 256 splits the output of encoder 264 into smaller packages suitable for transmission over the wireless link. Packager 256 attaches a header in front of the data packet so that the packets can be identified uniquely by the receiver of the information. For example, if the data input to translation layer 254 is first compressed, then encrypted, then encoded, the output of encoder 264 can be represented by:

(Encodingscheme, [EncryptionID {CompressionID, Data}]).

Thus, the packager takes the above data and produces packets generally in the form shown in FIG. 7 and given by:

{Hdr, data}, {Hdr, data}. . . [Hdr, data}

Packager 256 (which can also be viewed as a translator) provides the data and headers to radio transmitter 258 which transmits the data to radio receiver and driver 22. More specifically, the packager 256 breaks input data from content provider 12 into a number of packets somewhere between approximately 128 and 500 bytes in size depending on the particular carrier. Each packet is sent to a paging gateway (e.g, radio transmitter 258), such as by the internet, e-mail, wireless carrier or via modem. Packets can be sent down the pager channel in any order.

In one preferred embodiment, each record or packet contains 11-23 bytes of packet header information and N-bytes of packet data information generally of the form of packet 230 illustrated in FIG. 7. The radio transport header in the packet header information preferably includes an IP address, a sequence number, a packet number and a number of optional headers (e.g., group and topic filtering bytes 234 and routing header 236).

The IP address is the address of the service provider. The sequence number provides a particular sequence number for a packet stream being transmitted. The IP address and the sequence number (in combination) provide a unique identification to the packet stream and allow a receiver, such as mobile device 18, to assemble multiple packet streams arriving in a multiplex manner.

Radio receiver and driver 22 filters the data, as discussed above, and provides data to be received to router 210. Router 210 examines the header information on each packet. The header information gives router 210 an indication as to which translator needs to be invoked to operate on the data. In the embodiment shown in FIG. 8, the translators 212, 266, 268 and 270 are simply provided in reverse order as translators 256, 260, 262 and 264. The router maintains a table of all available translators in reference to the dynamically linked libraries (DLLs) of those translators. The four byte header or tag is used to locate the appropriate translator. The translator is responsible for removing this tag and dispatching or returning the translated data.

Most of the translators are part of a chain of

translators in which the output of the translator can be fed to another translator. This provides flexibility to the content provider since they can alter the sequence of translators to their needs and particular data. However, translators can also be provided which consume the input in the sense that they place the outputs somewhere else in the system and thereby stop the translation chain.

The router continues to apply translators until the article is consumed by one of the terminating translators. In one preferred emboidment, when no remaining tags or headers are found and the article is still not consumed, then the data is passed onto the e-mail inbox 272.

Thus, router 210 obtains a first data packet, provides it to unpackager 212, and receives the unpackaged and joined data back from unpackager 212.Unpacker and joiner 212 stores all received packets and joins them together. It can receive packets out of sequence, receive multiple streams (from different content providers or the same content provider). In sum, the unpackager 212 implements a simple file system where a file comprises the complete data which was sent, before packetization.

The file name is formed of the IP address which is that of the service provider, along with the sequence number which, in addition to indicating a packet stream sequence member, indicates whether this particular packet is the last packet in a sequence being transmitted. The packets are received and stored in an ordered, linked list by unpackager and joiner 212.

Radio receiver and driver 22 receives and buffers

a complete page of information. It then passes this page to message router 210 which writes the page to a file. Router 210 then calls unpackager and joiner 212. The packet is appended to a file whose name is derived from the IP address and sequence number combination contained in the given packet. If the file does not yet exist, then it is created new by unpackager 212.

When the packet marked as last packet is received, then unpackager 212 knows how many packets to expect. Recall that the last packet need not arrive temporally last. Unpackager 212 counts the number of packets already received and stores the number of packets it expects in a counter. Each time a non-duplicate packet is appended, the counter is decremented. When it falls to zero, all packets have been received. The unpackager 212 then marches through the index file which it has created, and which contains a time stamp indicative of the order of the packets received. The unpackager creates a data file in correct sequence and passes the data file on for further processing.

As soon as all packets have arrived, the data file containing the ordered linked list is removed from the file system in unpackager 212 and is passed either on to additional translators in translation layer 209 or back to router 210.

In order to deal with lost, duplicate, and erroneous packets, a checksum error detection method using cyclic redundancy code-32 (CRC-32) method is implemented over the entire file of data bytes (i.e., it excludes all header bytes).

In order to detect lost packets, the time stamp

of the last packet received in the index file is recorded. Unpackager 212 checks this time stamp each time it processes a packet for the present data file, or for any other data file. If the time difference between a current time and the time of the last packet received is over a desired number of minutes (or any other suitable time interval), it is assumed that any remaining packets for the data file have been lost and the data file is deleted.

Duplicate packets are detected by referencing the index file which will already have an initialized entry for that packet. Two options can be implemented in dealing with duplicate packets. First, the new packet can be discarded and the old one retained. Second, the new packet can be appended to the data file by overwriting the index entry for the first (or old) packet. This will have the effect of discarding the old packet.

In any case, to conclude the example provided in FIG. 8, once the packets have been unpacked and joined, router 210 examines the headers on the data to find that the data must first be provided to decoder 266. Decoder 266 decodes the data and provides it back to router 210. The next header on the data is examined by router 210 and indicates that the data needs to be provided to decrypter 268. Decrypter 268 decrypts the data and then returns it to router 210. Router 210 then provides the data to decompressor 270, based on the header information remaining with the decrypted data. Decompressor 270 decompresses the data and either returns it to router 210 or provides it to router component 216 which identifies the particular destination for the data. In the preferred

embodiment, routing component 216 is coupled to web content cache 208 and e-mail inbox 272. Of course, other destinations can also be provided.

One specific implementation of a translator, along with a more detailed description of illustrative compression, encryption and encoding translators is provided in the above-referenced co-pending U.S. patent applications, which are hereby fully incorporated by reference, as well as Appendix A hereto.

Thus, by separating the content into separate script template and data files, the present invention provides the ability to deliver content to a mobile device over a low bit rate channel in an economic and efficient manner. Small segments of data can be delivered instead of full HTML pages. The present invention also provides a mechanism by which logging and filtering can be accomplished in an efficient manner.

Although the present invention has been described with reference to preferred embodiments, workers skilled in the art will recognize that changes may be made in form and detail without departing from the spirit and scope of the invention.

Appendix

Mobile Channels Scripting Environment

The Mobile Channels scripting model is based on Active Server Pages (ASP), as defined in IIS. ASP code is written in VBS. In Mobile Channels, both ASP and VBS are scaled down to fit the constraints of Windows CE devices. The streamlined ASP is also known as pocket ASP (pASP). Together, pASP and VBS are referred to as the Mobile Channels scripting environment. The discussions presented here focus on the differences between pASP/VBS for Mobile Channels and ASP/VBS for Active Channels.

Types

There are three legal data types for Mobile Channels scripting: STRING, NUMERIC, and BOOLEAN. However, only STRING is supported internally. The other two are derived from STRING. String literals may be specified using the double quote character (") to bracket the expression. Numeric strings may be specified without quotes. Numbers can be of integers only and their values range between -32,768 and 32767. Boolean expressions evaluate to 1 for true and 0 for false. They may not be assigned to TRUE or FALSE as in Visual Basic. For example,

Data Type	Value	Description
STRING	*"Example string literal"*	
NUMERIC	`Result=3+4`	The result evaluates to 7. But *Result* is stored as a string value.

BOOLEAN	(a) 3 = 3, (b) 3 = 5	(a) evaluates to 1 and (b) to 0.

Data Structures

Mobile Channels supports the following data structures.

Data Structure	Description
Variable	Elemental data structure of the simple data types presented above. Variable names are alphanumeric and must start with an alpha character. The underscore character can be used except for the leading character. Variable names should be short to conserve memory and can not be longer than 255 characters in any case.
Array	An ordered collections with numeric keys. The index counts from zero (0). For example, `Result = a(0)+a(1).` The method, **Array.Count** returns the total number of elements in the array.

Keywords

The following keywords are reserved and may not be used as variable names:

If, Then, Else, ElseIf, End If
For, Next, Do While, Loop, Exit For, Exit While
Set, Response, Request, MobileChannels
Now, LocDate, Len, Mid, Split, Asc, Chr, StrComp, Random

Comments

Comments are started with the single quote (') and may appear anywhere on a line. **REM** of VBS is not supported for Mobile Channels scripting. The following is an example of a comment.

```
' this is an example comment.
```

Appendix

Operators and Precedence

Operator	Type	Precedence	Description
*	Numeric	1	Multiplication
/	Numeric	1	Division
Mod	Numeric	1	Modulo division
+	Numeric	2	Addition
-	Numeric	2	Subtraction
&	String	2	Concatenation
<	Boolean	3	Less than
<=	Boolean	3	Less than or equal to
>	Boolean	3	Greater than
>=	Boolean	3	Greater than or equal to
=	Boolean	3	Equal to
<>	Boolean	6	Not equal to
And	Boolean	4	Logical AND
Or	Boolean	4	Logical OR
Not	Boolean	5	Logical NOT

Expressions are evaluated according to operator precedence. Operators of higher precedence (1 being the highest) get evaluated first. Operators of the same level are evaluated from left to right. Precedence may be overridden using parenthesis which can be nested. The inner most parenthesis is evaluated first.

Unlike in VBS, all expressions within a statement are always evaluated. In the following example, if *arr.count* is not greater than zero, *arr(1)* and *arr(2)* will be evaluated and the references to *arr(j)* will result in error.

```
If arr.count >0 and arr(1) = "foo" then
   arr(2) = "bar"
End If
```

If the first logical expression is false, the ensuing expressions are invalid. The correct implementation should be as follows.

```
If arr.count > 0 then
   If arr(1) = "foo" then
      arr(2) = "bar"
```

```
   End If
End If
```

Escaping Special Characters

Special characters such as the double quote may be "escaped" within a string literal by preceding it with the back slash character (\). The back slash character can be included in a string by escaping it as well. For example,

```
"This is a string that contains \" double quoates\"."
"This is a string that contains back slashes as in a file path:
\\c:\\windows."
```

Statements

In the Mobile Channels scripting environment, there are five classes of statements:

Assignment

The assignment statement is of the following form:

```
<variable> = <expression>
```

Conditional

The **If** statement provides conditional flow of control. The **End If** part is required. The statements after a logical expression will not be evaluated unless the logical expression evaluates to true (1). The conditional statement can be one of the following forms:

```
If <logical expression> Then
      <statement>
End If
```

or

```
If <logical expression> Then
      <statement1>
Else
      <statement2>
End If
```

or

```
If <logical expression1> Then
      <statement1>
```

Appendix

```
ElseIf <logical expression2> Then
      <statement2>
End If
```

or

```
If <logical expression1> Then
      <statement1>
ElseIf <logical expression2> Then
      <statement2>
Else
      <statement3>
End If
```

Loop

There are two types of loop statements: **For/Next** and **Do/While**:
The **For** loop iterates through the loop by setting the *variable* initially at numeric *expression1* and incrementing this value by the **Step** amount (*expression 3*) with each pass through the loop. When the optional **Step** clause is omitted, the default clause of **Step** 1 is invoked. The loop terminates when the variable reaches a value greater than *expression2*.

```
For <variable>=<expression1> To <expression2> [Step <expression3>]
     <statements1>
     (Exit For)    ' Optional
     <statements2>
Next
```

The **Do While** loop continues looping until the logical expression, *logExpression* becomes false (0). The **Exit** statements provides a way to terminate a loop without satisfying the normal termination criteria. When **Exit** is encountered, the loop breaks and execution resumes at the statement immediately following the loop. **Exit** is usually used in conjunction with a conditional statement.

```
Do While <logExpression>
     <statements1>
     (Exit While)  'Optional
     <statements2>
Loop
```

Active Server

Appendix

Active Server statements refer to the methods of pASP objects such as **Response** and **Request**. The **Response.Write** statement returns an output to the HTML stream. For example,

```
Response.Write("<A Href=MCTP://MSNBC/ch2> Click here to jump to
Sports </A>").
```

The Mobile Channels scripting environment exposes certain server variables. The **Request.ServerVariables** statement may be used to query the server variables. It takes a name string expression and returns a value string expression associated with the name. So

```
newURL=Request.ServerVariables("URL")
```

obtains the root URL for the channel of the page. And

```
platStr=Request.ServerVariables("Platform")
```

returns the platform string as one of the following:

String	Platform
"WIN32_CE"	Windows CE
"WIN32_WINDOWS"	Windows 95/Windows 98
"WIN32_NT"	Windows NT

Similarly, the **Request.QueryString** statement returns the value of a specified argument passed to the page as part of the URL. For example, if URL for a page is named as "*MCTP://msnbc/ch2 ? city=seattle*", then the statement

```
theCity = Request.QueryString("city")
```

assigns *Seattle* to the *theCity* variable.

Set

The **Set** statement assigns a variable to an instance of an object. However, the Mobile Channels scripting environment supports only the **MobileChannels.Utilities** pseudo object. Thus the only usage of the **Set** statement is to create an **MobileChannels.Utilities** object and assigns it to an instance variable:

Appendix

```
Set mc_variable = Server.Create("MobileChannels.Utilities")
```

Line breaks are ignored when a statement is evaluated. Thus, statements can wrap to more than one line. The statement continuation character ("_") is recommended, but not mandatory. For example,

```
MyVar = "This is an example of " & _
        "a statement appearing " &
        "on multiple lines." & MyVar
```

Functions

The following functions are exposed in the Mobile Channels scripting environment.

Now
Returns the current date and time and takes no argument. For example,
`Response.Write("Today's date is " & Now).`

LocDate
Returns the date using the current regional settings to format the date. For example,

```
Response.Write( "Date: " & LocDate )
```

Len(*<string>*)
Returns the length of a string. For example
`Len("Hello?")`

returns 6.
Mid(*aStringExpression, startNumExpression,[length]*)
Returns a sub-string of an existing string. The resulting sub-string is of *length* characters long and begins at the *Start* character number (counting from one, not zero) in the original *string* expression. For example,

```
Foo = Mid("This is my String", 9, 2).
```

Foo is now set to "*my*".
Split(*aStringExpression, delimiterStringExpression*)

Bright House Networks - Ex. 1008, Page 1567

Appendix

Parses a string into sub-strings based on a specified delimiter. The result is returned as an array of strings. For example,

```
Names = Split("Bob;Fred;Joe;",";")
```

results in the following sub-strings:

```
Names(0)="Bob"
Names(1)="Fred"
Names(2)="Joe"
Names(3)=""
```

Asc(*aStringExpression*)
Converts a character string into its numeric ASCII value and returns an numeric expression. If the *aStringExpression* is longer than one character, the function returns the ASCII value of the first character only.

Chr(*numericExpression*)
Converts an ASCII numeric value to the associated character and returns a string expression of one character long. For example, to create a string containing one newline character, use,

```
str = Chr(10)
```

StrComp(*S1*, *S2* [,*Compare*])
This function compares two strings, *S1 and S2,* optionally specifying the comparison mode, *Compare*. The *Compare* argument can be 0 or 1. If *Compare* is omitted, a binary comparison is performed.

This function returns one of the following values:

Condition	Return Value
S1 is less than *S2*	-1
S1 is equal to *S2*	0
S1 is greater than *S2*	1

Random(*range*)
The function generates a random number in the range 0 to one less than *range*. For example,

```
num = Random(10)
```


Bright House Networks - Ex. 1008, Page 1568

generates random numbers from 0 to 9 inclusive.

Mobile Channels Scripting Object

MobileChannels.Utilities is a pseudo object in the Mobile Channels scripting environment that provides support for navigation and manipulation of objects within a CDF file. The **Utilities** object provides a number of methods for Mobile Channels scripting. These methods are summarized in the following table.

Methods	Description
Data	Reads a block of data from a data item
Debug	Emits debug output to aid script development
Href	Returns an element's HREF
HrefExists	Returns true if an item exists in cache
IsSubscribed	Returns subscribed state of a channel/subchannel
IsUnread	Returns read/unread state of item or channel/subchannel
LibraryCall	Accesses a DLL special function
Locate	Jump to a specified ID within the CDF
Navigate	Traverses a CDF file
Tag	Returns the tag of an element in a CDF file
Title	Returns an element's title
Value	Returns the value of an element in a CDF file

To use these services, the **Utilities** object must be instantiated first using the **Set** function as follows:

```
Set MC = Server.Create("MobileChannels.Utilities")
```

MC will be used below as a shorthand for the **MobileChannels.Utilities** scripting object, however, the object may be assigned to any variable name.

Navigate Method of the Utilities Objects

The **MC.Navigate()** command is a powerful, frequently used, and by far the most important method in pASP. It is designed to help examine the structure of a

Bright House Networks - Ex. 1008, Page 1569

mobile channel, as represented in CDF, at run time. To understand the behavior of this command, a brief discussion of the background and terminology is helpful.

The basic operand of the **Navigate** command is an element that is the smallest unit of information in a CDF file. Every element has a *tag* and optionally a *value*. The **MC.Tag()** and **MC.Value()** methods of pASP may be used to fetch these strings for any element. The elements are organized into a tree structure as specified by XML as the CDF file is parsed. The **Navigate** command lets us move to specific elements within the tree, and to move between elements with certain relationships. This information can be very useful to the channel scripts which use CDF to dynamically generate the HTML pages for the channel at run time.

The discussions below will refer frequently to the sample CDF file and its associated parse tree, which are provided at the end of this document. The parse tree shows the internal representation of the sample CDF file. Each line of the parse tree is equivalent to an element, and all start with the tag for the element. The more indented elements are children of their less indented parents. Elements at the same level of indentation are siblings. In the CDF file, for example, the **BASE** element is a child of the top-level **CHANNEL** element. The first **HREF** element is a sibling of the **BASE** element. The **INTERVALTIME** element is a child of the **SCHEDULE** element.

Many elements are considered to have a default value. These are indicated in the parse tree by an "= [*string*]" expression following the tag of the element. The default value is determined in the following scheme. First, if the element under consideration has a string directly associated with it, the string is the default value. Next, if there is a child **VALUE** element, the child's value becomes the default one. If no **VALUE** element is provided, but a child **HREF** element is found, its value becomes the default value. If none of these can be found, the **VALUE** is empty. For example, the value of the first **ID** tag is a direct string, the **TITLE** tag has an explicit **VALUE** element, so this is used, and the value of first **LOGO** tag

Bright House Networks - Ex. 1008, Page 1570

is its **HREF**. The **SCHEDULE** tag has no direct string, **VALUE** or **HREF** children, so its value is empty.

The **Navigate** function has the following syntax:

```
NewElem = MC.Navigate( StartElem, NavAction, [,Match] )
```

The function returns a new element, or 0 if the command could not find the specified element. You may test this return value using standard VBS comparisons such as:

```
IF NOT NewElem THEN
   ' not found
END IF
```

The *StartElem* parameter is the starting element from which to base relative movement commands. If you are using the absolute movement command "*Jump*", you must use "" for the *StartElem* parameter. But in all other cases it must be a valid element returned from a previous **Navigate()** command.

The *NavAction* parameter must be one of the following strings:

"*Jump*"
The "*Jump*" action is the first command used to get a starting element. It is equivalent to the **MC.Locate()** command (see below). The *StartElem* parameter must be an empty string. The "*Jump*" action navigates directly to a specific element in the CDF as identified by the supplied ID. For example, the following statement,

```
NewElem = MC.Navigate( "", "Jump", "D1" )
```

jumps to the first data item element in the example CDF file. The *NewElem* will be the **ITEM** parent element to the **ID** element ("D1", about halfway down in the example CDF file).

"*First*"
The "*First*" action moves to the first element at a given level. For example, from the **ID** element of the first **LOGO** element in the example CDF file, a

Appendix

"*First*" action will move to the **STYLE** tag of that **LOGO**. More practical scenarios are to use this action to go back to the beginning of the list of **ITEM**s under a subchannel.

```
NewElem = MC.Navigate( StartElem, "First" )
```

"*Out*"

The "*Out*" action moves to the parent element from the current element, or to the left one indent in the parse tree diagram. For example, from the **TITLE** element of the example CDF, the "*Out*" action will result in the movement to the top-level channel element.

```
NewElem = MC.Navigate( StartElem, "Out" )
```

"*In*"

The "*In*" action moves to first child element beneath the current element. For example, from the first **USAGE** element in the example CDFfile, the "*In*" action will result in a movement to the **VALUE** element.

```
NewElem = MC.Navigate( StartElem, "In" )
```

"*Prev*"

The "*Prev*" action moves to the element at the same level immediately previous to the current element. If it does not find a previous element at the same level, it will return 0; it will not next out to the parent element. For example, if from the **BASE** element in the example CDF file, the "*Prev*" action will result in a move to the HREF element right before it. Calling "Prev" again will return 0 since there are no more siblings at this level.

```
NewElem = MC.Navigate( StartElem, "Prev" )
```

"*Next*"

The "*Next*" action moves to the next element at the same level. As with the "*Prev*" action, if it finds no such sibling element, it returns zero. For example, from the first **LOGO** tag in the example CDF file, the "*Next*" action will result in a move to the second **LOGO** element.

Bright House Networks - Ex. 1008, Page 1572

Appendix

```
NewElem = MC.Navigate( StartElem, "Next" )
```

"*Match*"

The "*Match*" action attempts to find a sibling element with a tag matching the specified match string. It will traverse as many siblings as it needs to until it either finds a match or can find no more siblings. If the "*Match*" action starts from a matched element, it will simply return the current element. To match beyond the current element, the "*Match*" action must follow a "*Next*" action.

```
NewElem = MC.Navigate( StartElem, "Match", "TagToMatch" )
```

"*InMatch*"

The "*InMatch*" action is the same as "*Match*" above except it begins its search at the first child of the current element. This can be useful for looking for specific subtags which modify the enclosing element. For example, the following statements,

```
UsageElem = MC.Navigate( StartElem, "InMatch", "USAGE" )
If UsageElem Then
   UsageVal = MC.Val( UsageElem )
   ' test for specific usage...
End If
```

look for the **USAGE** tag for a specific item.

The only actions that use the optional third parameter are "*Match*" and "*InMatch*".

Other Methods of the Utilities Object

Tag

This method returns the tag name of an element:

```
tagString=MC.Tag(elementID)
```

Value

This method returns the value of an element:

```
valString=MC.Value(elementID)
```

Data

This method gets data from a Mobile Channels data file and returns an array of name-value pairs based on the current location and the specified block number.

Appendix

The names are the field names as specified in an **ITEMFORMAT** statement and the values are the data items (lines) as fetched from the data file. In the following example, *dataItems* is an array to hold the data items,

```
dataItems =MC.Data(elementID, blockNum)
```

where *elementID* is the current location within the CDF file, for example, the **ID** item for the MCD file, and *blockNum* is the block number within the file. Blocks start with zero. So the first repeating block, if present, is always block number one (even if there is no header). The resultant array, *dataItems*, contains an element for each item (line) within the block. The items in a block counts from zero.

Each data item is, in effect, an object that supports the **Tag**, **Type**, and **Value** methods to expose its own properties.

Tag
dataItems(index).Tag returns the field name for the indexed array position, as declared in the **<ITEMFORMAT>** element.

Value
dataItems(index).Value returns the value of the field for the indexed array position.

Type
dataItems(index).Type returns the type as specified in the **<ITEMFORMAT>** statement. If no type is listed or if the **<ITEMFORMAT>** tag is missing, then the **Type** method returns "HTML". Other types include "TEXT", "IMG", and "HREF".

Type	Description
HTML	The line item is HTML formatted content. This is the default type.
HREF	The line is a URL, (either http:// or mctp://).
IMG	The line contains the ID of an image item in the CDF file.
TEXT	Same as HTML.

Appendix

Locate

The function is of the following form:

```
newElem = MC.Locate("ID")
```

and is a shorthand for the "*Jump*" action of the **Navigate** method:

```
newElem = MC.Navigate( "", "Jump", "ID" )
```

LibraryCall

This function allows a script to access a custom DLL to perform functions not available through standard scripting. The method is of the following form:

```
Result = MC.LibraryCall( LibName, FuncName [,param]* )
```

First, the method checks for security to verify that the DLL has been properly registered for access via pASP scripting. An accessible DLL must have a registry entry in **\HKLM\Software\Microsoft\Mobile Channels\Components**, matching the name of the DLL.

Then the **LibraryCall** method dynamically loads the specified DLL by calling the **GetProcAddress** function to look up the specified function. Any additional parameters are then marshalled before being forwarded to the DLL function. Up to 8 optional parameters may be passed.

The DLL function must return a LPWSTR value. If the return value is NULL, **LibraryCall** returns zero (0). Otherwise, it returns the string itself as a standard pVBS string value.

Debug(*Mesg*)

The **Debug** method allows a debug string to be written out during the execution of the script. This may be useful during development to help examine program flow. The debug messages will appear in the console window of any attached debugger, similar to the **OutputDebugString** API.

The function does not return any value.

HrefExists(*Href*)

Appendix

This method tests to determine whether the specified URL can be found in cache. This allows a script to gracefully handle missing images, data elements, or other components needed by the script. The URL must be a fully qualified http-style URL.

This method returns 1 if found in cache, else 0.

Href(*Elem*)

This method returns the full URL for the specified element if it is specified in the CDF file. It returns 0 if no URL can be found.

IsSubscribed(*ChanElem*)

This tests to see if the specified channel or subchannel element is currently subscribed to by the user. It returns 1 if the channel is subscribed, or 0 if it is not found or not subscribed.

Note: this will not work on items, only on channels. Furthermore, it always returns 1 when running on the desktop (in IE4).

Title

This method is of the following form:

```
titleString = MC.Title( ElemString )
```

and it attempts to decipher the title of a given element by the following means:

If there is an explicit **TITLE** tag for this element, the value of that is returned,

If it is an *.mcd* data item with an **ITEMFORMAT** specifying a **TITLE** field, the data item is opened and the title extracted therefrom,

If an **ID** element is provided, its value is returned,

If anything else, NULL is returned.

Note that this method does not mark a data item as "Read" as it fetches the title. This is different from using **Navigate** to get the title. The latter method marks the item as "Read", even if the user has not actually looked at it.

IsUnread

Bright House Networks - Ex. 1008, Page 1576

This method returns a boolean indicating whether the associated item or channel has been read.

```
newContent = MC.IsUnread( Elem )
```

The function returns non-zero value if called directly on an unread item. When called on a subchannel, it will return non-zero if any items *or other subchannels* within the subchannel have not been read.

SetUnread

This method sets the read/unread state for an item and returns no value. And it is of the following format.

```
SetUnread(Elem [,Flag])
```

The *Elem* parameter should be a valid element from a prior **Navigate()** or **Locate()** call. The optional *Flag* parameter is a boolean used to mark the state of *Elem*: 0 for "unread" and 1 for "read". The default value of *Flag* is "unread".

Note Due to a limitation of the version 1.0 implementation of Mobile Channels, image items do not get marked as "read" automatially (as do MDC items). This results in the image remaining marked as "unread" even though it has been read. Further, all the parent subchannels will also show as "unread" as long as any images within are unread. To remedy this situation, the script author should manually mark each image as "unread" each time it is displayed. The **SetUnread()** utility is the correct way to achieve this.

Channel Browser and Active Desktop HTML Extensions

Several HTML extensions provide additional functionality for writing more advanced scripts for Active Desktop and for controlling page updates in Channel Browser.

Bright House Networks - Ex. 1008, Page 1577

Appendix

Application Links

Windows CE Active Desktop supports a special HTML Href for launching an application from a hyperlink. The format is:

```
<A HREF="mcexe://[appname]">Launch Text</A>
```

appname is the name of the application to be launched when the link is clicked.

The application must have been registered by placing a value of the same name as the **.exe** in the registry at **\HKLM\Software\Microsoft\Mobile Channels\Components.**

META Tags

Channel Browser and Active Desktop recognize the following special META tags. Embedding these META tags in the header of a page, either directly or via scripting can cause the page to be automatically handled or updated in a particular manner. Note that these META tags (with the exception of *Refresh*) are ignored by IE4.

The META tags are summarized in the following table.

Http_Equiv	Description	Support
Notify	Catch cache or database updates	Active Desktop and Channel Browser.
Refresh	Reload after time interval	Active Desktop
LaunchApp	Execute application for desktop component	Active Desktop
Autosize	Control image scaling	Channel Browser

The following are some detailed discussions of each tag.

Notify

This META tag allows a page to be automatically updated when there is an update to a particular database, or when a particular item is updated in cache. This can be used to regenerate a page automatically when a new version of it (or one of its components) comes in via sync or other mechanism. The two forms of this META tag are:

Appendix

```
<META HTTP-EQUIV="Notify"
      CONTENT="DBUPDATE=[DBname];URL=[RefreshUrl]">
<META HTTP-EQUIV="Notify"
      CONTENT="CACHEUPDATE=[WatchUrl];URL=[RefreshUrl]">
```

DBname is the name of the database to monitor for updates.
WatchUrl is the URL of an item to watch for cache updates on.
RefreshUrl is the URL to load if an update is detected.

Refresh

This META tag causes a page to be automatically reloaded after a specified time interval. The form is:

```
<META HTTP-EQUIV="Refresh" CONTENT="[secs];URL=[RefreshUrl]">
```

secs sets the number of seconds until the page will be reloaded.
RefreshUrl is the URL to load after the specified interval.

LaunchApp

This META tag allows an application to be launched by clicking on the header of an Active Desktop component on the device. The form is:

```
<META HTTP-EQUIV="LaunchApp" CONTENT="[appname][?params]">
```

appname is the name of the executable to launch.
params is an optional comma separated list of *params* to be passed to the application upon invocation

The application must have been registered by placing a value of the same name as the **.exe** in the registry in **\HKLM\Software\Microsoft\Mobile Channels\Components**.

Autosize

This META tag allows the default image scaling behavior to be disabled for a particular page. The HTML control will, by default, attempt to scale images for display on the smaller form factor screen. However, if this META is specified in the page header the images will displayed at the full size causing scrollbars to appear if needed. The form is:

```
<META HTTP-EQUIV="Autosize" CONTENT="Off">
```


Bright House Networks - Ex. 1008, Page 1579

Appendix

Note that since the default value is always "On" there is no need for any other value in the CONTENT field.

Example CDF File

```
<?XML version="1.0"?>
<CHANNEL
    HREF="mctp://mySite/34droad/34droad.cdf "
    BASE="http://mySite/" ID="34droad">
    <SELF HREF="http://mySite/34droad/34droad.cdf" />
    <SCHEDULE><INTERVALTIME MIN="40"/></SCHEDULE>
    <USAGE VALUE="MobileChannel"/>
    <TITLE>3 4 D Road</>
    <ABSTRACT>Things to think about while you're away...</>
    <LOGO STYLE="IMAGE" HREF="34droad/34logo.gif" ID="LOGO"/>
    <LOGO STYLE="ICON"  HREF="34droad/34icon.gif" ID="ICON"/>
    <CHANSCRIPT VALUE="SS"/>
    <ITEMSCRIPT VALUE="SS"/>
    <ITEM HREF="34droad/34.mcs" ID="SS">
        <ABSTRACT>Things to think about while you're away...</>
    </ITEM>
    <ITEM HREF="cgi-bin/deep1.mcd?1" ID="D1">
        <USAGE VALUE="MobileChannel"/>
        <LOG VALUE="document:view"/>
    </ITEM>
    <ITEM HREF="cgi-bin/deep1.mcd?2" ID="D2">
        <USAGE VALUE="MobileChannel"/>
        <LOG VALUE="document:view"/>
    </ITEM>
    <ITEM HREF="cgi-bin/deep1.mcd?3" ID="D3">
        <USAGE VALUE="MobileChannel"/>
        <LOG VALUE="document:view"/>
    </ITEM>
    <ITEM HREF="34droad/34logo.gif" ID="LOGO">
        <USAGE VALUE="None"/>
    </ITEM>
    <ITEM HREF="34droad/34icon.gif" ID="ICON">
        <USAGE VALUE="None"/>
    </ITEM>
    <ITEM HREF="34droad/34main.gif" ID="MGIF">
        <USAGE VALUE="None"/>
        <LOG VALUE="document:view"/>
    </ITEM>
</CHANNEL>
```


Bright House Networks - Ex. 1008, Page 1580

Appendix

Parse Tree of the example CDF file

```
CHANNEL = mctp://mySite/34droad/34droad.cdf
    HREF = mctp://mySite/34droad/34droad.cdf
    BASE = http://mySite/
    ID = 34droad
    SELF = http://mySite/34droad/34droad.cdf
        HREF = http://mySite/34droad/34droad.cdf
    SCHEDULE
        INTERVALTIME
            MIN = 40
    USAGE = MobileChannel
        VALUE = MobileChannel
    TITLE = 3 4 D Road
        VALUE = 3 4 D Road
    ABSTRACT = Things to think about while you're away...
        VALUE = Things to think about while you're away...
    LOGO = 34droad/34logo.gif
        STYLE = IMAGE
        HREF = 34droad/34logo.gif
        ID = LOGO
    LOGO = 34droad/34icon.gif
        STYLE = ICON
        HREF = 34droad/34icon.gif
        ID = ICON
    CHANSCRIPT = SS
        VALUE = SS
    ITEMSCRIPT = SS
        VALUE = SS
    ITEM = 34droad/34.mcs
        HREF = 34droad/34.mcs
        ID = SS
        ABSTRACT = Things to think about while you're away...
            VALUE = Things to think about while you're away...
    ITEM = cgi-bin/deep1.mcd?1
        HREF = cgi-bin/deep1.mcd?1
        ID = D1
        USAGE = MobileChannel
            VALUE = MobileChannel
        LOG = document:view
            VALUE = document:view
    ITEM = cgi-bin/deep1.mcd?2
        HREF = cgi-bin/deep1.mcd?2
        ID = D2
        USAGE = MobileChannel
            VALUE = MobileChannel
        LOG = document:view
            VALUE = document:view
    ITEM = cgi-bin/deep1.mcd?3
```

Appendix

```
    HREF = cgi-bin/deep1.mcd?3
    ID = D3
    USAGE = MobileChannel
        VALUE = MobileChannel
    LOG = document:view
        VALUE = document:view
ITEM = 34droad/34logo.gif
    HREF = 34droad/34logo.gif
    ID = LOGO
    USAGE = None
        VALUE = None
ITEM = 34droad/34icon.gif
    HREF = 34droad/34icon.gif
    ID = ICON
    USAGE = None
        VALUE = None
ITEM = 34droad/34main.gif
    HREF = 34droad/34main.gif
    ID = MGIF
    USAGE = None
        VALUE = None
    LOG = document:view
        VALUE = document:view
```

WHAT IS CLAIMED IS:

1. A system for providing information content from a content provider to a mobile device, comprising:

a provider component including:

a first store storing the content as a data file and a corresponding script file, the data file including data indicative of the content to be rendered and the script file including a script indicative of a desired rendering form in which the data is to be rendered, wherein the script file and the data file are transmittable independently of one another;

a transmitter coupleable to the first data store and configured to transmit the content to the mobile device; and

a mobile device component, disposed on the mobile device, including:

a receiver configured to receive the content from the transmitter;

a second store;

a router coupled to the receiver and the second store and configured to provide the script

Bright House Networks - Ex. 1008, Page 1583

file and the data file to the second store; and

a transport coupled to the second store and configured to selectively retrieve the data file and execute the script to place the data in the desired rendering form.

2. The system of claim 1 wherein the provider component comprises:

a first translator layer coupled to the first store and configured to retrieve the data file and the script file and translate the data and script form an untranslated form to a translated form.

3. The system of claim 2 wherein the mobile device component comprises:

a second translator layer coupled to the receiver and configured to translate the data and script from the translated form to the untranslated form.

4. The system of claim 3 wherein the first translator layer comprises a compressor configured to compress the data and script from an uncompressed form to a compressed form and wherein the second translator layer comprises a decompressor coupled to the receiver and configured to decompress the data and script from the compressed form the the decompressed form.

5. The system of claim 3 wherein the first translator layer comprises an encryptor configured to encrypt the script and data and wherein the second translator layer comprises a decryptor configured to decrypt the data and the script.

6. The system of claim 3 wherein the first translator layer comprises an encoder configured to encode the script and data and wherein the second translator layer comprises a decoder configured to decode the script and data.

7. The system of claim 3 wherein the first translation layer comprises a packager configured to divide the script and data into portions and translate the portions into packets suitable for transmission and wherein the second

Bright House Networks - Ex. 1008, Page 1585

translation layer comprises an unpackager configured to untranslate and assemble the packets.

8. The system of claim 3 wherein the first translator layer is configured to provide tag information indicative of translation operations performed on the script and data and to provide the tag information along with the script and data in the translated form and wherein the second translator layer is configured to perform translation operations on the script and data based on the tag information.

9. The system of claim 1 wherein the transmitter comprises:

a wireless transmitter for transmitting the content over a wireless transmission link and wherein the receiver comprises a wireless receiver configured to receive the content over the wireless transmission link.

10. The system of claim 1 and further comprising:

a desktop computer selectively coupleable to the provider component and including a retrieval

Bright House Networks - Ex. 1008, Page 1586

component configured to retrieve the data file and the script file, the transmitter comprising a synchronization component on the desktop computer configured to be selectively coupleable to the mobile device.

11. The system of claim 10 wherein the receiver comprises:

a synchronization component on the mobile device selectively coupleable to the synchronization component on the desktop computer, wherein the synchronization component on the desktop computer and the synchronization component on the mobile device are configured to selectively synchronize the script file and the data file to the mobile device.

12. The system of claim 11 wherein the first store includes a definition file describing characteristics of the information content including a logging characteristic and wherein the transport logs rendering information indicative of rendering of the information content on the mobile device.

Bright House Networks - Ex. 1008, Page 1587

13. The system of claim 12 wherein the synchronization component on the mobile device is configured to synchronize the rendering information to the desktop computer and wherein the retrieval component is configured to provide the rendering information to the provider component.

14. The system of claim 13 wherein the rendering information includes a rendering count indicative of a number of times the information content is rendered on the mobile device and a rendering duration indicative of a duration for which the information content is rendered on the mobile device.

15. The system of claim 10 wherein the provider component further comprises:

a wireless transmitter for transmitting the content over a wireless transmission link and wherein the receiver further comprises a wireless receiver configured to receive the content over the wireless transmission link.

Bright House Networks - Ex. 1008, Page 1588

16. The system of claim 1 wherein the information content comprises information rendered using a processor-independent language.

17. The system of claim 16 wherein the information content comprises information rendered using hypertext markup language (HTML).

18. The system of claim 3 wherein the first translation layer provides the script and data, in the translated form, with a plurality of separate filtering segments, the receiver on the mobile device selectively receiving and discarding the script and data based on a first of the plurality of filtering segments, and the second translation layer selectively receiving and discarding the script and data based on a second of the plurality of filtering segments.

19. The system of claim 18 wherein the information content comprises group information and topic information on a subscribable channel, wherein the second of the plurality of filtering segments includes a first filtering portion corresponding to the group information and a second

Bright House Networks - Ex. 1008, Page 1589

filtering portion corresponding to the topic information and wherein the second translation layer filters based on the group and topic filtering portions independently of one another.

20. A computer readable medium including instructions readable by a mobile device which, when implemented, cause the mobile device to handle information by performing steps comprising:

intermittently receiving a data file and a corresponding script file, the data file including data indicative of the information and the script file including script information indicative of a desired form in which the data is to be rendered, the data file and corresponding script file being independently receivable by the mobile device;

storing the script file and data file; and

retrieving the data from the data file and executing the script in the corresponding script file to render the data.

Bright House Networks - Ex. 1008, Page 1590

21. The computer readable medium of claim 20 including instructions readable by a mobile device which, when implemented, cause the mobile device to handle information by performing steps comprising:

intermittently receiving an updated data file including updated data; and

executing the script in the corresponding script file, already stored on the mobile device, to render the updated data.

22. The computer readable medium of claim 21 wherein the step of executing the script in the corresponding script file, already on the mobile device, is performed in response to receiving the updated data.

23. The computer readable medium of claim 22 wherein executing the script comprises:

rendering the data in a processor independent form.

24. The computer readable medium of claim 23 wherein executing the script comprises:

rendering the data in hypertext markup language (HTML) form.

25. The computer readable medium of claim 20 further including instructions readable by a mobile device which, when implemented, cause the mobile device to handle information by perform steps comprising:

intermittently receiving an updated script file including updated script; and

executing the updated script on data in the corresponding data file, already stored on the mobile device, to render the data according to the updated script.

26. The computer readable medium of claim 21 wherein the data file and corresponding script file are received in a translated form and further including instructions readable by a mobile device which, when implemented, cause the mobile device to handle information by performing steps comprising:

untranslating the data file and script file into an untranslated form.

27. The computer readable medium of claim 20 further including instructions readable by a mobile device which, when implemented, cause the mobile device to handle information by performing steps comprising:

intermittently receiving additional script files including additional script; and

intermittently receiving additional data files, corresponding to the additional script files and including additional data.

28. The computer readable medium of claim 27 further including instructions readable by a mobile device which, when implemented, cause the mobile device to handle information by performing steps comprising:

executing the additional script in the additional script files on data in the corresponding additional data files to render the additional data according to the additional script.

29. The computer readable medium of claim 20 further including instructions readable by a mobile device which, when implemented, cause the mobile device to handle information by performing steps comprising:

Bright House Networks - Ex. 1008, Page 1593

logging rendering data based on rendering of the information.

30. The computer readable medium of claim 29 further including instructions readable by a mobile device which, when implemented, cause the mobile device to handle information by performing steps comprising:

synchronizing the rendering data to a desktop computer.

31. The computer readable medium of claim 20 further including instructions readable by a mobile device which, when implemented, cause the mobile device to handle information by performing steps comprising:

receiving the script file and data file with a plurality of separate filtering segments; and

selectively receiving and discarding the script and data based on the plurality of filtering segments.

32. The computer readable medium of claim 31 wherein the information content comprises group information and topic

information on a subscribable channel, and further including instructions readable by a mobile device which, when implemented, cause the mobile device to handle information by performing steps comprising:

selectively receiving and discarding the script and data based on a first filtering portion corresponding to the group information and a second filtering portion corresponding to the topic information, wherein the filtering is based on the group and topic filtering portions independently of one another.

Bright House Networks - Ex. 1008, Page 1595

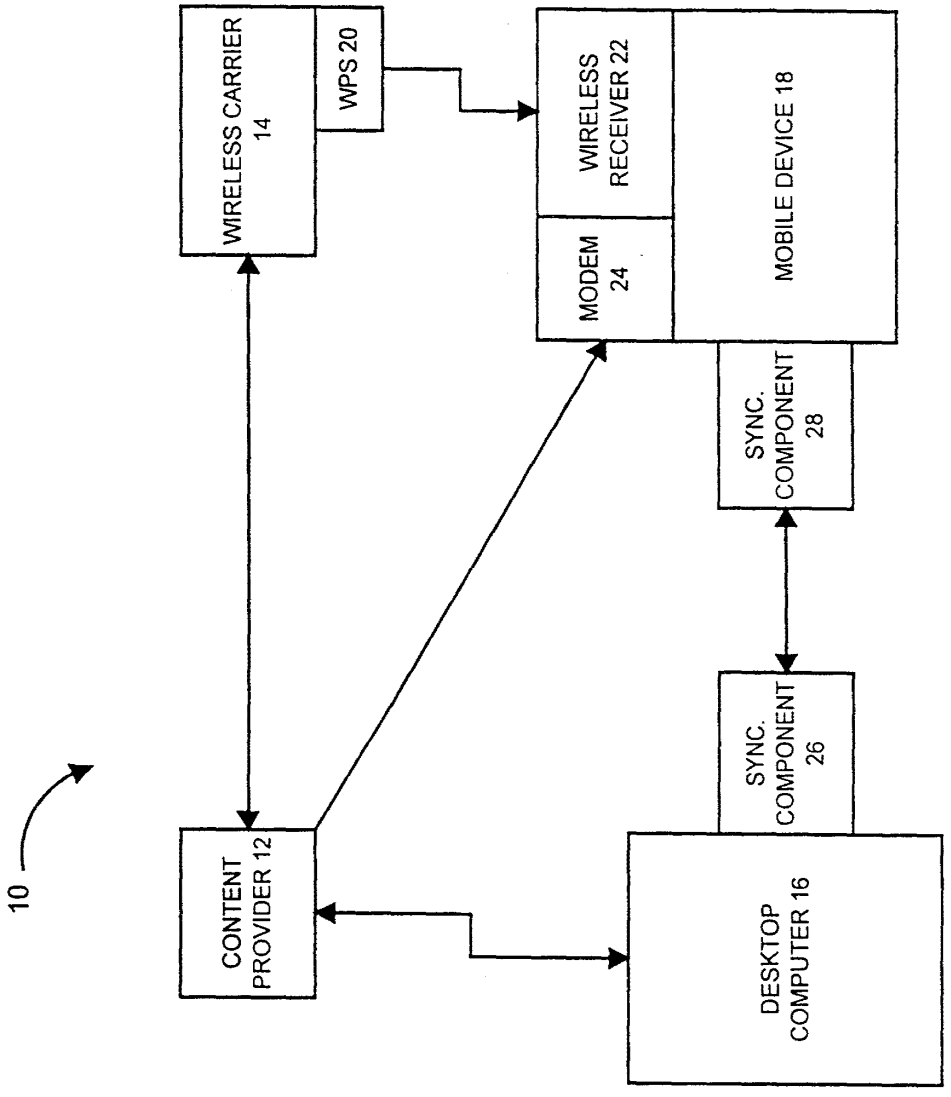

FIG. 1

Bright House Networks - Ex. 1008, Page 1596

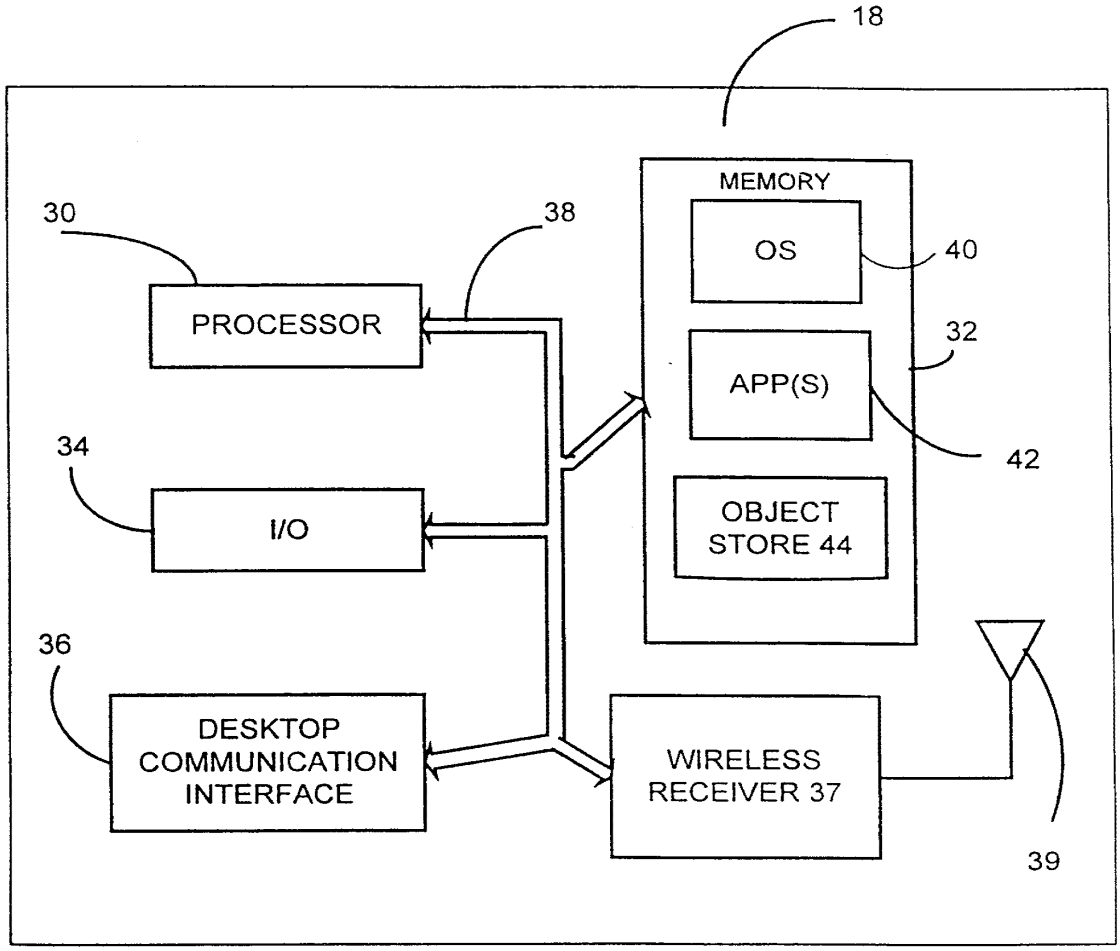

FIG.2

Bright House Networks - Ex. 1008, Page 1597

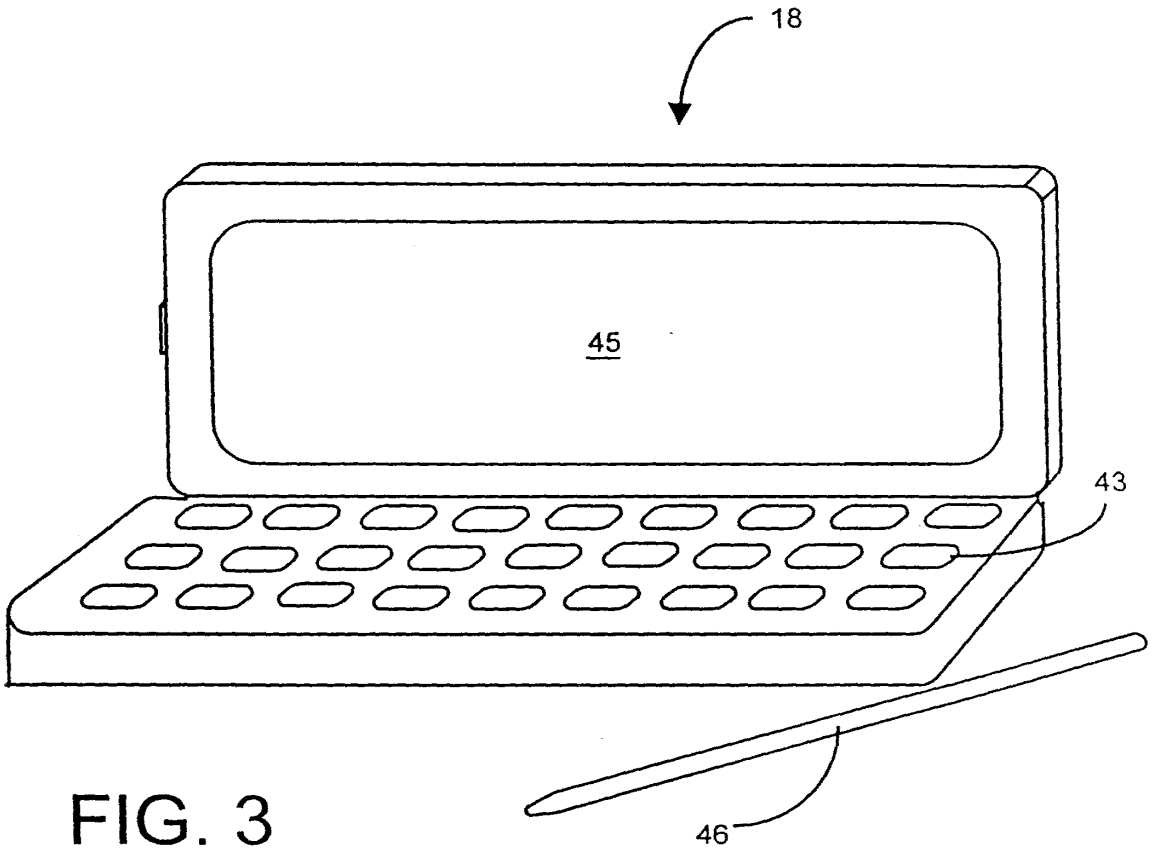

FIG. 3

Bright House Networks - Ex. 1008, Page 1598

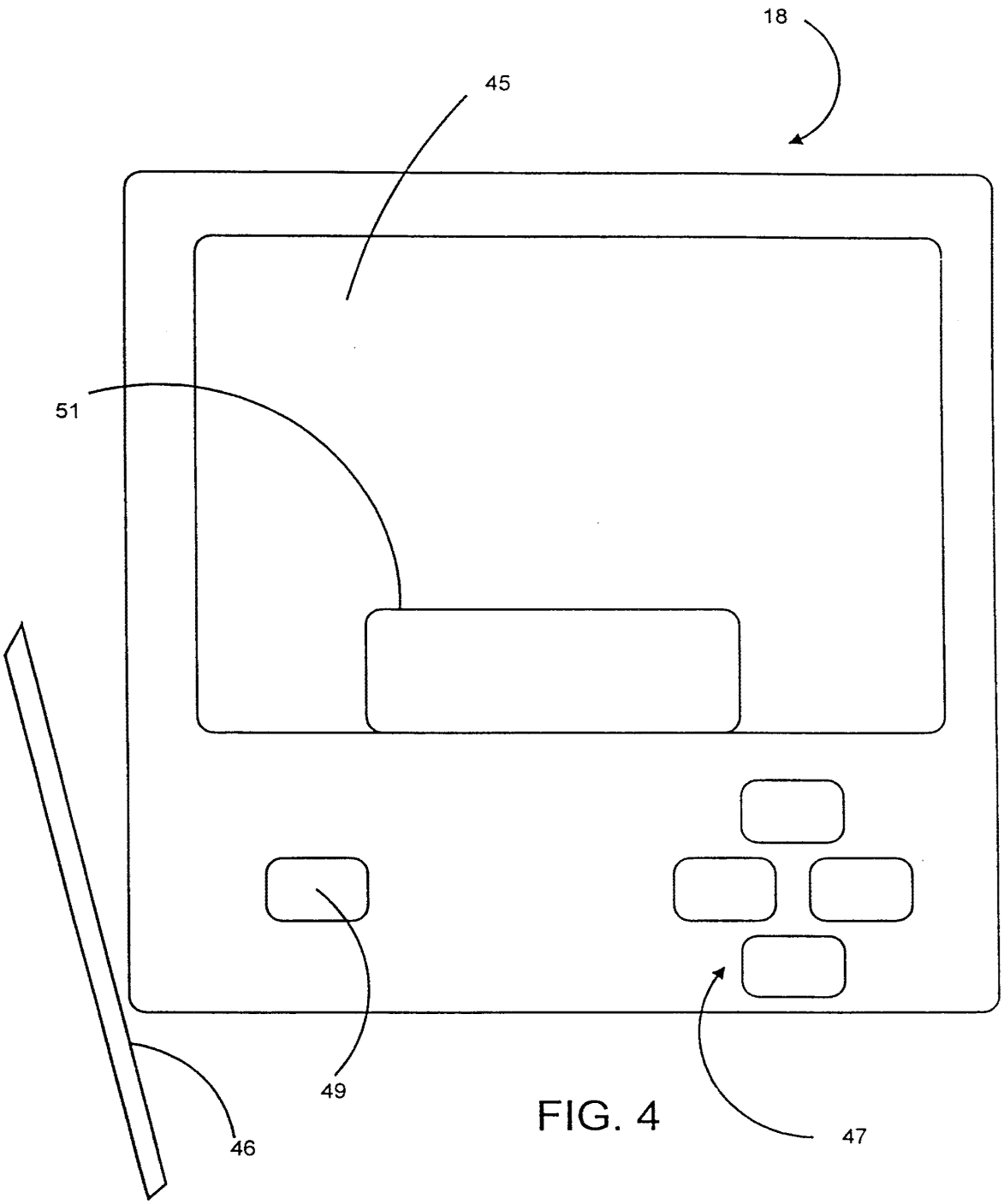

FIG. 4

Bright House Networks - Ex. 1008, Page 1599

FIG. 5

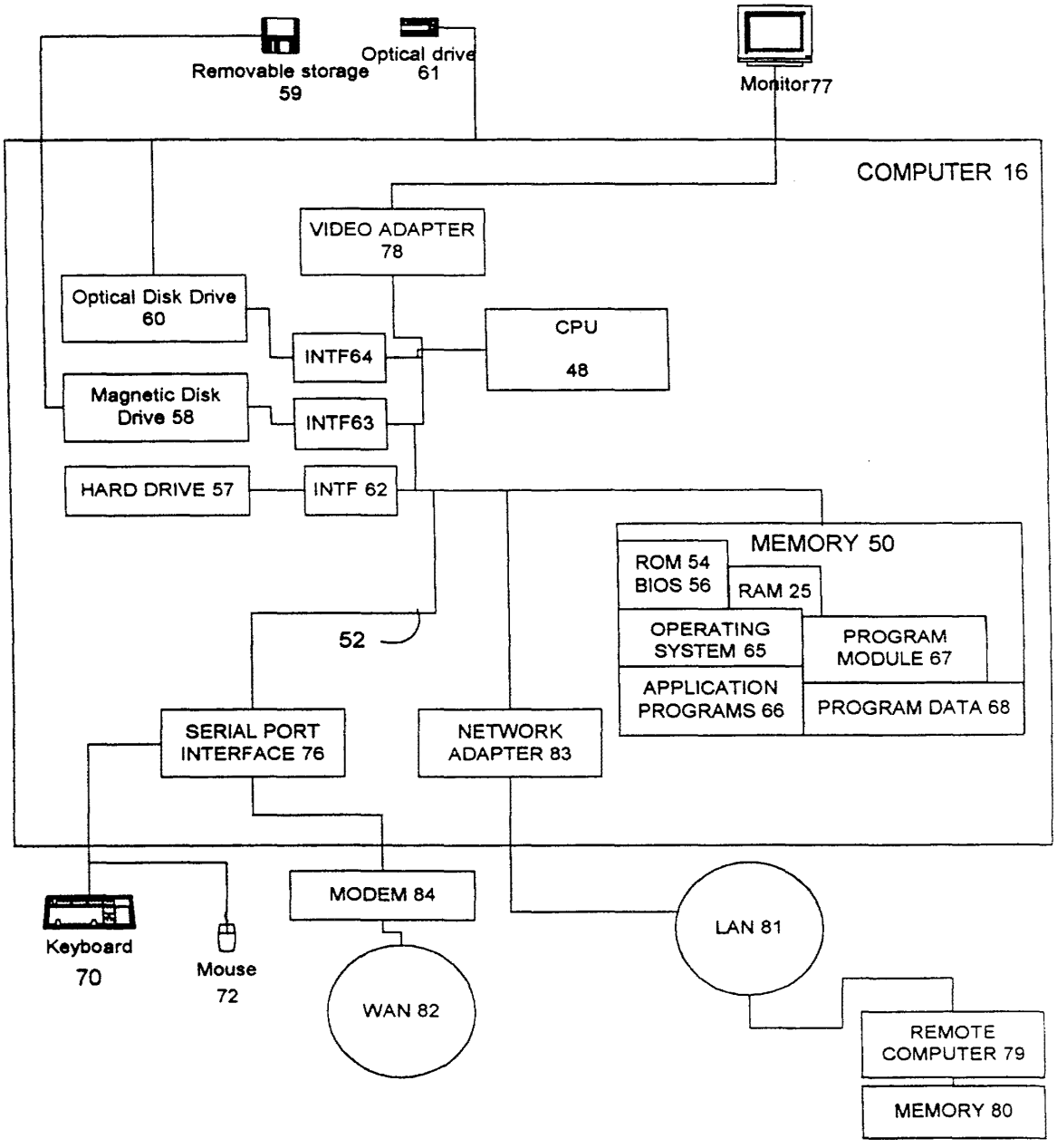

Bright House Networks - Ex. 1008, Page 1600

FIG. 6

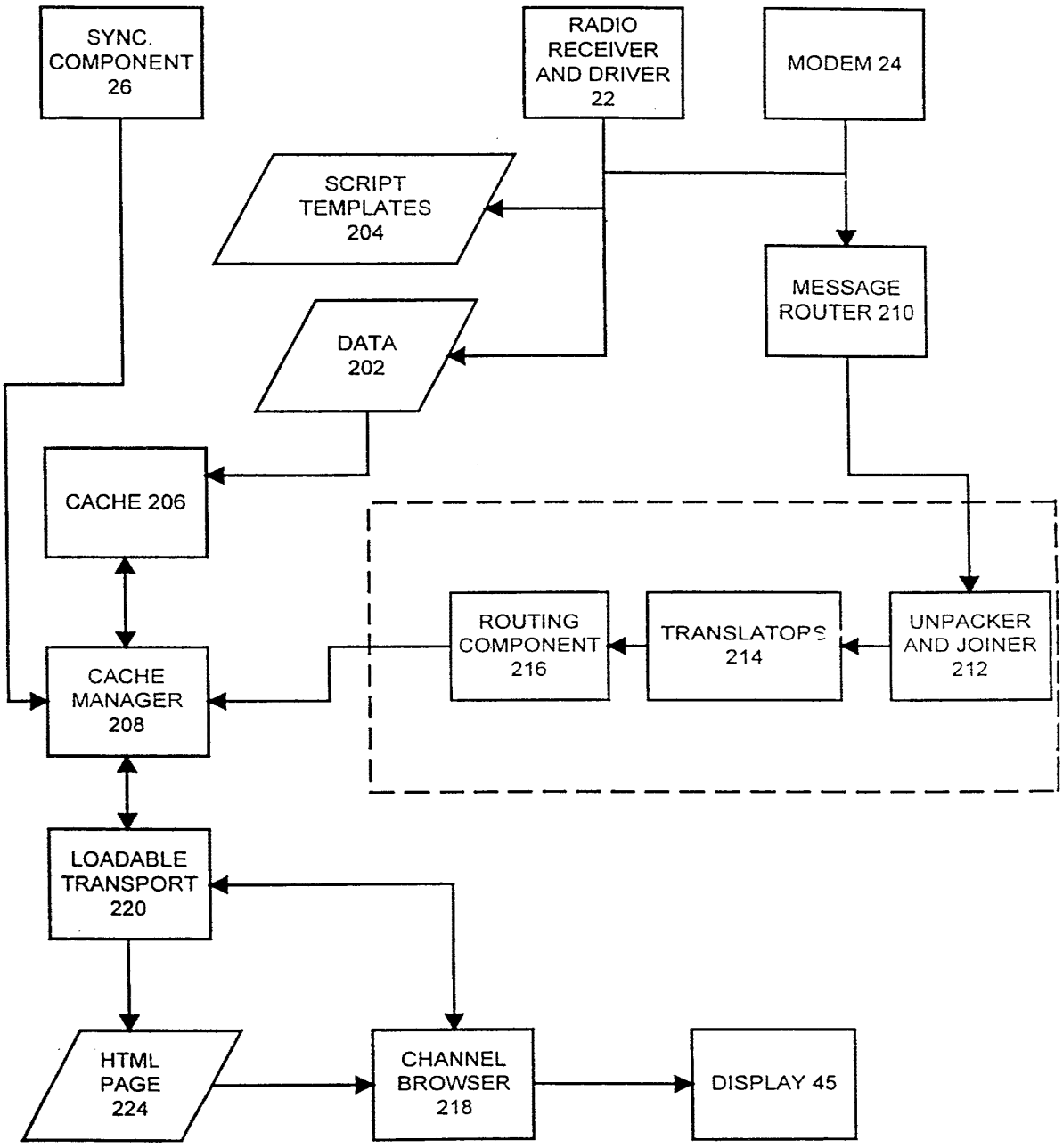

Bright House Networks - Ex. 1008, Page 1601

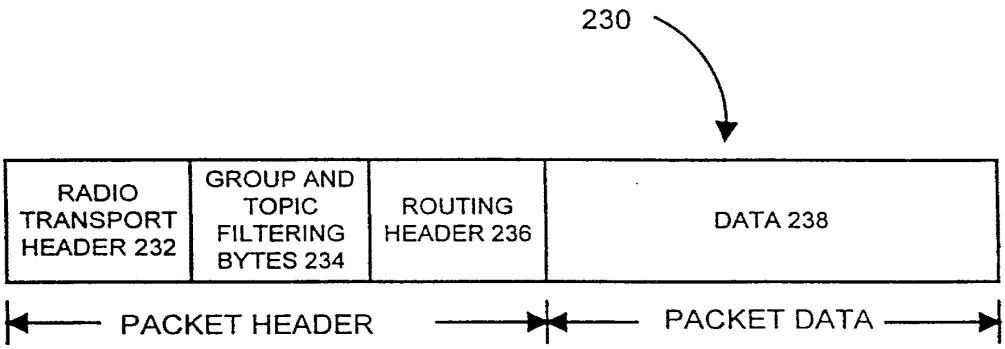

FIG. 7

Bright House Networks - Ex. 1008, Page 1602

FIG. 8

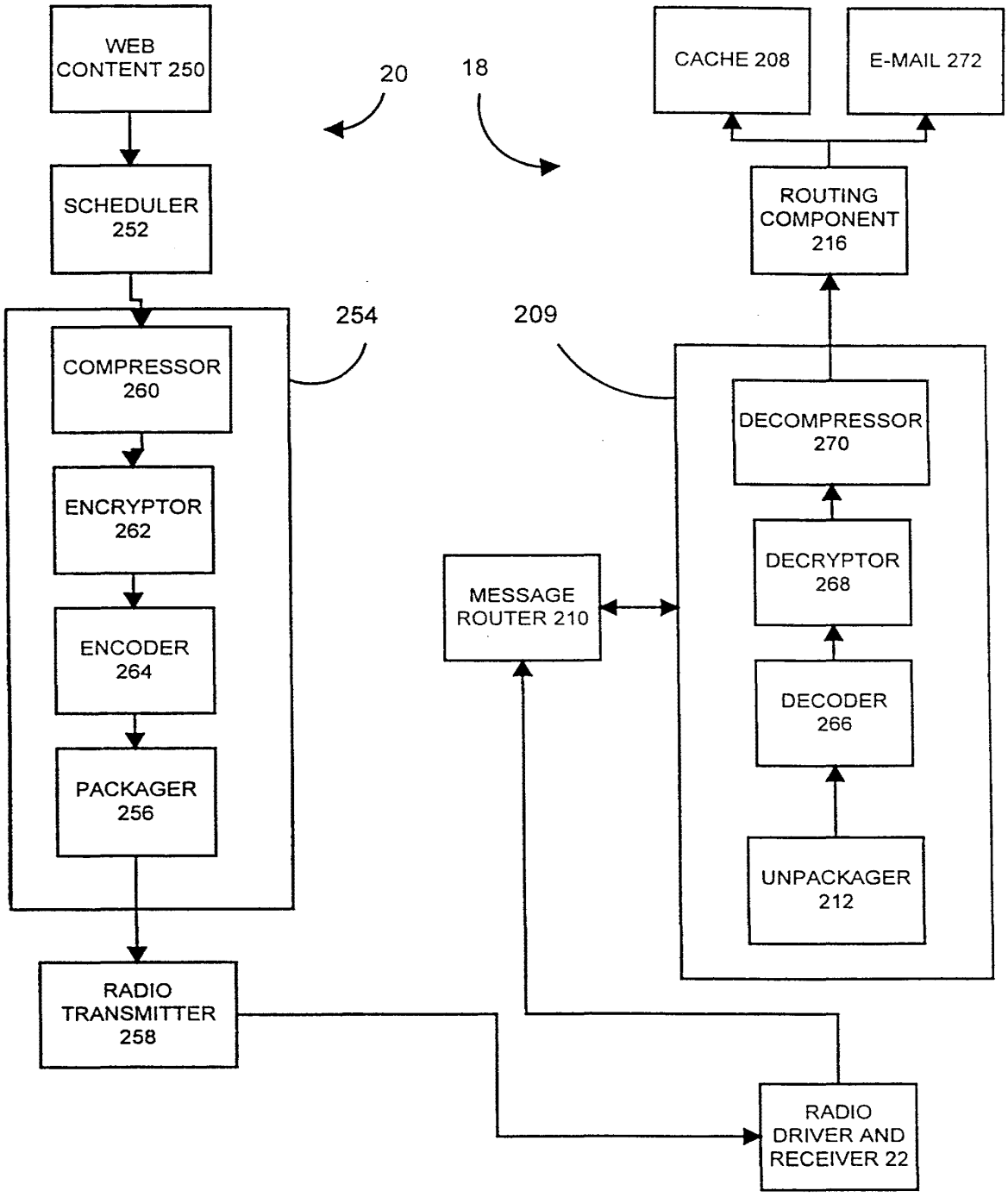

Bright House Networks - Ex. 1008, Page 1603

INTERNATIONAL SEARCH REPORT

Inter onal Application No
PCT/US 99/00336

A. CLASSIFICATION OF SUBJECT MATTER
IPC 6 H04L29/06

According to International Patent Classification (IPC) or to both national classification and IPC

B. FIELDS SEARCHED

Minimum documentation searched (classification system followed by classification symbols)
IPC 6 H04L

Documentation searched other than minimum documentation to the extent that such documents are included in the fields searched

Electronic data base consulted during the international search (name of data base and, where practical, search terms used)

C. DOCUMENTS CONSIDERED TO BE RELEVANT

Category °	Citation of document, with indication, where appropriate, of the relevant passages	Relevant to claim No.
X	KAASHOEK M F ET AL: "DYNAMIC DOCUMENTS: MOBILE WIRELESS ACCESS TO THE WWW" PROCEEDINGS, WORKSHOP ON MOBILE COMPUTING SYSTEMS AND APPLICATIONS,8 December 1994, pages 179-184, XP002016896 see abstract see page 179, right-hand column, line 20 - page 180, left-hand column, line 2 see page 180, left-hand column, line 36 - line 44 see page 180, right-hand column, line 32 - line 46 --- -/--	1,20

[X] Further documents are listed in the continuation of box C.

[ ] Patent family members are listed in annex.

° Special categories of cited documents :

"A" document defining the general state of the art which is not considered to be of particular relevance

"E" earlier document but published on or after the international filing date

"L" document which may throw doubts on priority claim(s) or which is cited to establish the publication date of another citation or other special reason (as specified)

"O" document referring to an oral disclosure, use, exhibition or other means

"P" document published prior to the international filing date but later than the priority date claimed

"T" later document published after the international filing date or priority date and not in conflict with the application but cited to understand the principle or theory underlying the invention

"X" document of particular relevance; the claimed invention cannot be considered novel or cannot be considered to involve an inventive step when the document is taken alone

"Y" document of particular relevance; the claimed invention cannot be considered to involve an inventive step when the document is combined with one or more other such documents, such combination being obvious to a person skilled in the art.

"&" document member of the same patent family

Date of the actual completion of the international search	Date of mailing of the international search report
16 June 1999	25/06/1999

Name and mailing address of the ISA	Authorized officer
European Patent Office, P.B. 5818 Patentlaan 2 NL - 2280 HV Rijswijk Tel. (+31-70) 340-2040, Tx. 31 651 epo nl, Fax: (+31-70) 340-3016	Adkhis, F

2

Form PCT/ISA/210 (second sheet) (July 1992)

Bright House Networks - Ex. 1008, Page 1604

INTERNATIONAL SEARCH REPORT

Inter ɔnal Application No
PCT/US 99/00336

C.(Continuation) DOCUMENTS CONSIDERED TO BE RELEVANT

Category °	Citation of document, with indication,where appropriate, of the relevant passages	Relevant to claim No.
A	VITALI F ET AL: "Extending HTML in a principled way with displets" COMPUTER NETWORKS AND ISDN SYSTEMS, vol. 29, no. 8-13, 1 September 1997, page 1115-1128 XP004095309 see abstract see page 1116, left-hand column, line 3 - line 14 see page 1116, left-hand column, line 27 - line 39 see page 1125, right-hand column, line 4 - page 1126, left-hand column, line 17 -----	1-32

2

Form PCT/ISA/210 (continuation of second sheet) (July 1992)

Bright House Networks - Ex. 1008, Page 1605

CORRECTED VERSION*

PCT

WORLD INTELLECTUAL PROPERTY ORGANIZATION
International Bureau

INTERNATIONAL APPLICATION PUBLISHED UNDER THE PATENT COOPERATION TREATY (PCT)

(51) International Patent Classification 6 : H04L 29/06

A1

(11) International Publication Number: WO 99/35802

(43) International Publication Date: 15 July 1999 (15.07.99)

(21) International Application Number: PCT/US99/00336

(22) International Filing Date: 7 January 1999 (07.01.99)

(30) Priority Data:

60/070,720	7 January 1998 (07.01.98)	US
60/075,123	13 February 1998 (13.02.98)	US
09/107,666	30 June 1998 (30.06.98)	US

(81) Designated States: CA, JP, European patent (AT, BE, CH, CY, DE, DK, ES, FI, FR, GB, GR, IE, IT, LU, MC, NL, PT, SE).

Published

With international search report.

Before the expiration of the time limit for amending the claims and to be republished in the event of the receipt of amendments.

(71) Applicant: MICROSOFT CORPORATION [US/US]; One Microsoft Way, Redmond, WA 98052–6399 (US).

(72) Inventors: WECKER, Dave; 23908 – 22nd Drive, S.E., Bothell, WA 98021 (US). DEO, Vinay; 16732 N.E. 35th Street, Bellevue, WA 98008 (US). MILLER, John, Mark; 8026 N.E. 122nd Place, Kirkland, WA 98034 (US). TUNIMAN, David; 23044 N.E. 61st Street, Redmond, WA 98053 (US). O'LEARY, Michael, J.; 22823 N.E. 54th Street, Redmond, WA 98053 (US).

(74) Agents: KELLY, Joseph, R. et al.; Westman, Champlin & Kelly, P.A., Suite 1600, International Centre, 900 2nd Avenue South, Minneapolis, MN 55402–3319 (US).

(54) Title: SYSTEM FOR DELIVERING DATA CONTENT OVER A LOW BIT RATE TRANSMISSION CHANNEL

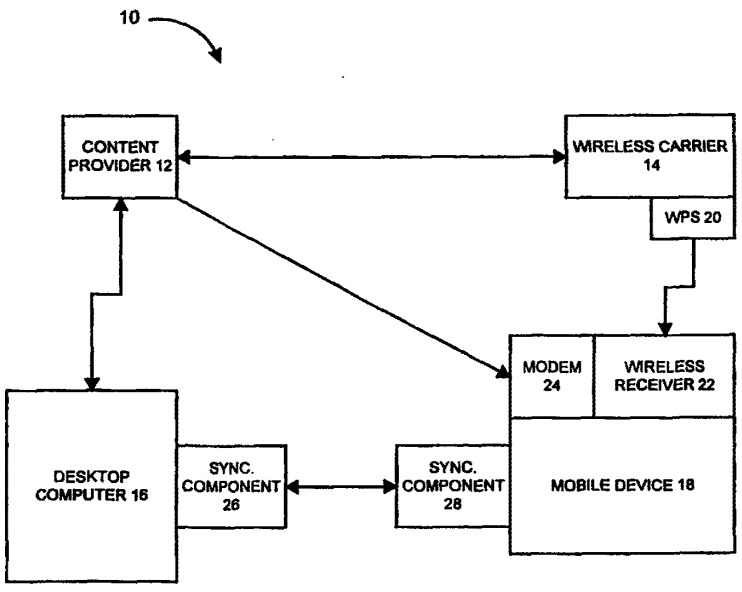

(57) Abstract

The present invention provides a system by which information content (250) is delivered to a mobile device (18). The web content (250) is divided into data (202) and script information (204). The script information (204) is used to operate on the data (202) to render the data (202) in a predetermined format.

*(Referred to in PCT Gazette No. 33/1999, Section II)

FOR THE PURPOSES OF INFORMATION ONLY

Codes used to identify States party to the PCT on the front pages of pamphlets publishing international applications under the PCT.

AL	Albania	**ES**	Spain	**LS**	Lesotho	**SI**	Slovenia
AM	Armenia	**FI**	Finland	**LT**	Lithuania	**SK**	Slovakia
AT	Austria	**FR**	France	**LU**	Luxembourg	**SN**	Senegal
AU	Australia	**GA**	Gabon	**LV**	Latvia	**SZ**	Swaziland
AZ	Azerbaijan	**GB**	United Kingdom	**MC**	Monaco	**TD**	Chad
BA	Bosnia and Herzegovina	**GE**	Georgia	**MD**	Republic of Moldova	**TG**	Togo
BB	Barbados	**GH**	Ghana	**MG**	Madagascar	**TJ**	Tajikistan
BE	Belgium	**GN**	Guinea	**MK**	The former Yugoslav Republic of Macedonia	**TM**	Turkmenistan
BF	Burkina Faso	**GR**	Greece			**TR**	Turkey
BG	Bulgaria	**HU**	Hungary	**ML**	Mali	**TT**	Trinidad and Tobago
BJ	Benin	**IE**	Ireland	**MN**	Mongolia	**UA**	Ukraine
BR	Brazil	**IL**	Israel	**MR**	Mauritania	**UG**	Uganda
BY	Belarus	**IS**	Iceland	**MW**	Malawi	**US**	United States of America
CA	Canada	**IT**	Italy	**MX**	Mexico	**UZ**	Uzbekistan
CF	Central African Republic	**JP**	Japan	**NE**	Niger	**VN**	Viet Nam
CG	Congo	**KE**	Kenya	**NL**	Netherlands	**YU**	Yugoslavia
CH	Switzerland	**KG**	Kyrgyzstan	**NO**	Norway	**ZW**	Zimbabwe
CI	Côte d'Ivoire	**KP**	Democratic People's Republic of Korea	**NZ**	New Zealand		
CM	Cameroon			**PL**	Poland		
CN	China	**KR**	Republic of Korea	**PT**	Portugal		
CU	Cuba	**KZ**	Kazakstan	**RO**	Romania		
CZ	Czech Republic	**LC**	Saint Lucia	**RU**	Russian Federation		
DE	Germany	**LI**	Liechtenstein	**SD**	Sudan		
DK	Denmark	**LK**	Sri Lanka	**SE**	Sweden		
EE	Estonia	**LR**	Liberia	**SG**	Singapore		

PCT WORLD INTELLECTUAL PROPERTY ORGANIZATION
International Bureau

INTERNATIONAL APPLICATION PUBLISHED UNDER THE PATENT COOPERATION TREATY (PCT)

(51) International Patent Classification 6 :
H04M 1/27, 3/52

A1

(11) International Publication Number: **WO 99/45687**

(43) International Publication Date: 10 September 1999 (10.09.99)

(21) International Application Number: PCT/US98/04024

(22) International Filing Date: 2 March 1998 (02.03.98)

(63) Related by Continuation (CON) or Continuation-in-Part (CIP) to Earlier Application
US 08/378,529 (CON)
Filed on 26 January 1995 (26.01.95)

(71)(72) Applicant and Inventor: YABLON, Jay, R. [US/US]; 910 Northumberland Drive, Schenectady, NY 12309 (US).

(74) Agent: YABLON, Jay, R.; Law Office of Jay R. Yablon, 910 Northumberland Drive, Schenectady, NY 12309 (US).

(81) Designated States: AL, AM, AT, AT (Utility model), AU, AZ, BA, BB, BG, BR, BY, CA, CH, CN, CU, CZ, CZ (Utility model), DE, DE (Utility model), DK, DK (Utility model), EE, EE (Utility model), ES, FI, FI (Utility model), GB, GE, GH, GM, GW, HU, ID, IL, IS, JP, KE, KG, KP, KR, KZ, LC, LK, LR, LS, LT, LU, LV, MD, MG, MK, MN, MW, MX, NO, NZ, PL, PT, RO, RU, SD, SE, SG, SI, SK, SK (Utility model), SL, TJ, TM, TR, TT, UA, UG, US, UZ, VN, YU, ZW, ARIPO patent (GH, GM, KE, LS, MW, SD, SZ, UG, ZW), Eurasian patent (AM, AZ, BY, KG, KZ, MD, RU, TJ, TM), European patent (AT, BE, CH, DE, DK, ES, FI, FR, GB, GR, IE, IT, LU, MC, NL, PT, SE), OAPI patent (BF, BJ, CF, CG, CI, CM, GA, GN, ML, MR, NE, SN, TD, TG).

Published
With international search report.

(54) Title: ENHANCED SYSTEM FOR TRANSFERRING, STORING AND USING SIGNALLING INFORMATION IN A SWITCHED TELEPHONE NETWORK

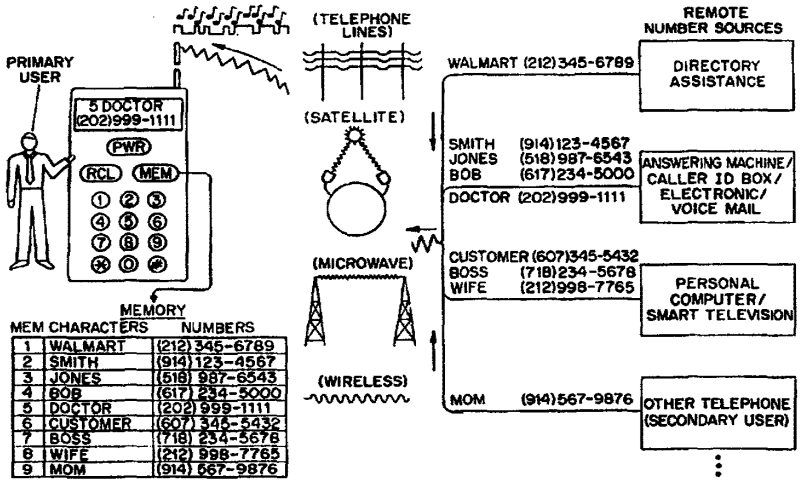

(57) Abstract

A system includes a telephone and a distant device. The distance device contains one or more telephone numbers which are later to be dialed at the telephone. The telephone numbers are transmitted in coded form, preferably dual tone multifrequency form, from the device to the telephone (figure 3). The distant device may be a directory assistance service position, a caller ID receiver, and answering machine, a voice or electronic mail system, a terminal operated by a secretary or receptionist, or a simple DTMF keyboard (figure 1). After the telephone numbers are received, they are stored in any of several memories in the telephone. Later, the user selects one of the entries for dialing and the entry is used for address signaling. Optionally, storage, selection and dialing of a memory entry can be further simplified by using voice processing techniques (figure 120).

FOR THE PURPOSES OF INFORMATION ONLY

Codes used to identify States party to the PCT on the front pages of pamphlets publishing international applications under the PCT.

AL	Albania	**ES**	Spain	**LS**	Lesotho	**SI**	Slovenia
AM	Armenia	**FI**	Finland	**LT**	Lithuania	**SK**	Slovakia
AT	Austria	**FR**	France	**LU**	Luxembourg	**SN**	Senegal
AU	Australia	**GA**	Gabon	**LV**	Latvia	**SZ**	Swaziland
AZ	Azerbaijan	**GB**	United Kingdom	**MC**	Monaco	**TD**	Chad
BA	Bosnia and Herzegovina	**GE**	Georgia	**MD**	Republic of Moldova	**TG**	Togo
BB	Barbados	**GH**	Ghana	**MG**	Madagascar	**TJ**	Tajikistan
BE	Belgium	**GN**	Guinea	**MK**	The former Yugoslav Republic of Macedonia	**TM**	Turkmenistan
BF	Burkina Faso	**GR**	Greece			**TR**	Turkey
BG	Bulgaria	**HU**	Hungary	**ML**	Mali	**TT**	Trinidad and Tobago
BJ	Benin	**IE**	Ireland	**MN**	Mongolia	**UA**	Ukraine
BR	Brazil	**IL**	Israel	**MR**	Mauritania	**UG**	Uganda
BY	Belarus	**IS**	Iceland	**MW**	Malawi	**US**	United States of America
CA	Canada	**IT**	Italy	**MX**	Mexico	**UZ**	Uzbekistan
CF	Central African Republic	**JP**	Japan	**NE**	Niger	**VN**	Viet Nam
CG	Congo	**KE**	Kenya	**NL**	Netherlands	**YU**	Yugoslavia
CH	Switzerland	**KG**	Kyrgyzstan	**NO**	Norway	**ZW**	Zimbabwe
CI	Côte d'Ivoire	**KP**	Democratic People's Republic of Korea	**NZ**	New Zealand		
CM	Cameroon			**PL**	Poland		
CN	China	**KR**	Republic of Korea	**PT**	Portugal		
CU	Cuba	**KZ**	Kazakstan	**RO**	Romania		
CZ	Czech Republic	**LC**	Saint Lucia	**RU**	Russian Federation		
DE	Germany	**LI**	Liechtenstein	**SD**	Sudan		
DK	Denmark	**LK**	Sri Lanka	**SE**	Sweden		
EE	Estonia	**LR**	Liberia	**SG**	Singapore		

ENHANCED SYSTEM FOR TRANSFERRING, STORING AND USING SIGNALING INFORMATION IN A SWITCHED TELEPHONE NETWORK

CROSS-REFERENCE TO RELATED APPLICATIONS

This application is a continuation of presently-pending of U.S. Patent application 08/378,529, filed January 26, 1995, which is in turn a continuation-in-part of U.S. Patent application 08/322,209, filed October 13, 1994, now abandoned.

FIELD OF THE INVENTION

This invention relates generally to telephone answering and paging devices, and in particular, to an enhanced, end-user equipment based messaging and paging system for telephonic information.

BACKGROUND OF THE INVENTION

Users of the telephone system today have a variety of methods available to them for obtaining the telephone numbers of individuals or businesses whom they wish to call. These include hard-copy telephone directories, directory assistance numbers (e.g., 555-1212 within the North American Numbering Plan (NANP)), personal telephone directories maintained by an individual or business, etc. There are also a number of different ways for individuals to obtain telephone messages and determine the phone numbers of parties whom they need to call back. These include automated devices such as telephone answering machines, pagers which display a callback number, and caller identification boxes, as well as human devices such as an office receptionist or secretary. Telephone memory storage and recall devices allow users to preprogram a limited personal directory of frequently-called telephone numbers into their telephone device, or, for example, to retain the last telephone number dialed from their telephone, and thus to automate the process of making some calls. But for the vast majority of calls, telephone users still must manually write down phone numbers on a piece of paper while speaking to a directory assistance operator, calling the office receptionist or listening remotely to the messages on their answering machine, or must have some other written or displayed representation of a phone number in front of them (e.g. on a pager), before they then proceed to manually punch such numbers into a telephone in order to place a call.

Particularly with the rapid increase in mobile telephone usage and the expected increase in the use of personal communications systems, personal digital assistants and similar devices, this system of manually recording, and then dialing telephone numbers is highly inconvenient. For the driver of a motor vehicle engaged in mobile telephone communications, it can be unsafe. And even for traditional fixed-location telephones, it is highly inefficient to call a directory operator, an office receptionist, or a home telephone answering machine, listen to and write down one or more telephone numbers, and then manually place telephone calls based on these numbers. It is also less-than-convenient for a pager user with a callback number displayed on a pager to track down and use a separate telephone to return the call.

One attempted approach to address some of these problems is a service commonly called "call completion". In the special case where the number the user wishes to dial is to be received from a directory assistance operator, where "call completion" is available the caller can indicate by a spoken signal or dialing of a DTMF (dual tone multifrequency) digit that call completion is desired. The carrier providing the telephone number then dials the call and

connects it to the caller. A surcharge is generally imposed for this service, above and beyond the cost of the telephone call.

Call completion by directory assistance operators, if and when it is implemented in a calling area, would reduce the need for a user to manually write down and then dial a telephone number when using directory assistance. However, if the user wishes to call the number again (for example if the number being called was busy or unanswered or if the desired party was not available), the user would still have to write down the number or would have to place a later call to directory assistance to again ask for call completion to the same number. If the user wants to use the number at a later time other than via call completion, some method of manually recording the number would similarly be needed. Further, the availability of call completion in various calling areas is uneven at best. Similar limitations exist in present systems for advising a caller that the called number has been disconnected and changed to a specified new number, or in advising a caller that further information can be obtained by calling a different, specified number.

It will be appreciated, however, that directory assistance call completion leaves some of the above-described problems unaddressed. Consider the case of the business executive or travelling salesperson receiving, say, twenty phone messages from his or her secretary or telephone answering machine, who then has to write down twenty phone numbers and manually place twenty return phone calls, all while trying to drive an automobile safely. Consider also the case of a person with a physical disability for whom writing down phone numbers and placing calls may be next to impossible.

In the case where the secretary is providing information about pending telephone messages to someone who is driving a car, it might be thought that the driver could be saved having to write down and signal the telephone numbers by the expedient of having the secretary accomplish a sort of ersatz call completion by placing a three-way or bridged call with the driver and with a party named in a telephone message. But while asking a secretary or receptionist to forward a call to another number can mimic a call completion service, it is highly difficult to do this in sequence for multiple calls and requires a third party -- the secretary -- to remain on standby throughout. Also, the signal quality degrades each time a call is forwarded.

Various voice recognition schemes may be used to simplify the process of determining and calling a telephone number. For example, some systems enable a user to speak a name into a phone, recognize the name from the voice, and then lookup and call a number accordingly. But the reliability of voice recognition systems today is uneven, the better systems are fairly expensive, such systems generally must be taught to recognize the voice pattern of each individual that uses them, the size of the directory of listings for which such a system can be effective is very much constrained, and generally, these systems operate on a pre-defined directory of telephone numbers. There is certainly no universal voice pattern, and the development of an automated voice system that can find the single correct entry in a directory with potentially millions of entries is daunting, requiring the give-and-take of ordinary human conversation or of highly sophisticated computer programs, even if the voice recognition is performed perfectly. To increase the widespread utility of even the most rudimentary voice processing systems, methods are needed to simplify the range of voice commands and signals that a user needs to utter and to reduce the quantity of numbering information that needs to be searched to provide a desired telephone number.

It is already commonplace for many telephones to contain internal memories allowing them to store a handful of frequently-used telephone numbers, or to retain the last number dialed automatically. The entry of numbers into the telephone's memory is invariably done by the user, who manually enters a number while also designating a numbered

memory location. But the numbers so stored are generally limited to frequently-called numbers, and must be manually entered via a series of strokes on the telephone keyboard.

Also, many people do not realize that this memory for frequently-dialed numbers can also be used to store the caller's own phone number and that a memory recall during an ongoing phone conversation can be used to send the DTMF digits of the caller's own number over the connection, directly from memory rather than via a series of keyboard entries, such that they can be heard at the other end of the connection. This comprises a rudimentary form of decentralized, user-customized caller identification that could, for example, simplify the process of signalling a pager via a paging service, but has not been exploited to date to nearly the extent possible.

Another approach is the use of a Caller identification (Caller ID) box having an automatic redial. The box has a button which, if pressed, results in redialing a telephone number that has been received via Caller ID. With such a box a phone number, even an infrequently or never-before used number, is stored and can be redialed as a result of a received calls, rather than as a result of manual entry by the phone user.

A caller ID box with such a function sometimes does not help, however, because sometimes the number that the phone user should dial is not the same as the number received via caller ID. For a person who is not located adjacent to the caller ID box, this benefit of having the numbers that need to be called already stored in the box's memory is no help. In addition, many political jurisdictions restrict or prohibit caller ID for reasons of personal privacy.

Further, implementation of caller ID today is centralized in the switches at telephone company central office facilities, rather than decentralized into intelligent end-user communications devices. Thus, individual users cannot readily customize their own caller ID "profiles" (for example, to specify a callback number different than the phone number they are calling from, to send a pictorial icon of themselves, etc.), and to easily decide for themselves whether or not to use caller ID features in the first place, irrespective of political jurisdiction or central office capability.

Telephone answering machines, which are in the nature of voice memories, are remotely accessible by dialing a correctly-coded sequence of touch tones comprising the owner's "password," but one must still listen to the voice recording, manually note the phone number to call, and then manually place the return call.

Paging devices -- so-called "beepers" -- are also used very commonly. With this device, a caller punches a sequence of touch tone digits corresponding to a requested callback number into his or her phone (or, as noted above, can already have these digits stored in the phone's frequently-dialed number memory and simply recall and transmit these digits from this memory) perhaps along with some additional digits identifying the caller. This number need not necessarily be the number that the caller is presently calling from, and can even be the number of some third party that is supposed to be called by the page recipient. These numbers are stored in the pager memory, and can subsequently be displayed by the pager user to determine the numbers to which his or her callbacks should be directed. However, the callback itself involves reading the numbers from the pager display, and then manually entering them into a separate telephone in order to make the callback. The pager itself does not signal a callback directly from its own memory. In addition, such pagers are used to receive incoming calls only. They are of no help to a pager user who needs to establish a connection with another location, such as a home answering machine or an office secretary, in order to receive messages and determine numbers that the user needs or wishes to call. Finally, today's pagers operate through a special, centralized paging service distinct from ordinary phone service, and it is this special service -- not intelligent end-user devices operating through the basic switched telephone network -- which takes DTMF digits and repackages them for transmission to and recognition by the pager, and which supplies any additional identifying information such as

character strings or voice mail.

While prior art does allow a primary phone user to suspend a phone conversation to manually add a new number into memory (particularly the last-number-dialed memory location, or the "scratchpad" memory found on many cellular telephones) and then return to the conversation, this still requires manual entry of the number by the telephone user at the telephone keyboard prior to storage and signalling of a callback. It is also quite cumbersome for multiple numbers.

It would thus be very desirable if the driver of an automobile, a physically disabled individual, or anyone else for whom it is inconvenient to have to first jot down telephone numbers and then enter them manually before initiating a call, could have a telephone or paging device forming part of a system that saves having to jot down telephone numbers and / or enter them manually to signal a callback. It would be desirable for the system to spare the user these burdens for telephone numbers received from directory assistance, from a secretary or receptionist, from a telephone answering machine, from a caller ID box, from voice or electronic mail, from another telephone user, or from a paging service.

SUMMARY OF THE INVENTION

The invention herein disclosed significantly simplifies the process through which telephone users can obtain and call one or more telephone numbers in a variety of settings. One or more telephone numbers, in touch tone, digital or other similar representation, are communicated from a remote location into storage in one or more locations in what may be termed a "primary user's" telephone memory, such that the stored number can then be employed directly by the primary user for later memory redial of that number. The telephone number is entered into the telephone's memory for redial purposes, not by the primary user, but by a user or server device (depicted the figures as a "remote number source" or "server") physically removed from the primary user's telephone. A multiplicity of such phone numbers can be stored in this manner, in a fraction of the time required for manual entry. Other helpful information ("enhanced user information") identifying the caller, such as a character code denoting the name of the person associated with a given phone number, an electronic or voice mail message, a facsimile message, a pictorial icon, or even a video message, may also optionally be transmitted and stored in this fashion. If an ISDN or broadband connection is employed, this identifying information can be conveyed via a data channel separate from communications on the voice channel, and higher-bandwidth communications are more readily facilitated. A memory-recall and redial process based optionally on rudimentary voice processing and recognition techniques completely eliminates the need for any keystrokes whatsoever by the primary user -- even the simple one-or-two touch keystroke sequence used in ordinary memory recall -- and makes the system completely hands-free. The invention has application in myriad settings, and is particularly beneficial for individuals who frequently travel, yet need to remain in touch with many other people, by telephone, during the course of such travel. It is also very beneficial for individuals with a physical disability who cannot easily write down or dial telephone numbers.

This remotely-generated signal which causes one or more numbers (and optionally, character and other enhanced user information) to be stored for later redial into the primary user's telephone can be generated from a variety of sources. One example is a directory assistance operator service position equipped to transmit a touch-tone or other coded rendition of the requested phone number instead of or in addition to a synthesized-voice recitation of the requested number. Another example is a primary user's home answering machine or caller ID box with appropriate transmission capability that records not only a verbal message, but also a machine-based representation of the number to

call back, which can be written onto the answering machine's tape or other memory directly by a caller to the answering machine supplying the appropriate number or via caller ID methods. A similar approach may easily be used in voice or electronic mail applications. Still another example is a personal computer or smart television into which a secretary, for example, can enter various telephone numbers that the primary user needs to call for various reasons (callbacks, prescheduled calls, new calls that the boss wants to have made, etc.), which is equipped to transmit an appropriate set of touch tone or related signals the next time the user touches base with the office. Another telephone user ("secondary user") with whom the primary user is conversing can interrupt the conversation to supply one or more telephone numbers which are then transmitted to the primary user's telephone memory for memory storage. Finally, a pager receiving a telephone number and other enhanced user information from a paging service can be supplemented with a telephone device allowing number recall and signalling directly from the pager memory. In all these instances, the memory locations in the primary user's telephone are remotely programmed on a dynamic basis with phone numbers and, optionally, related identifying information such as character strings, by whomever or whatever device is providing the user with stored telephone numbers for later redial. Thereafter, memory recall and redial can proceed in the usual manner with but a very small number of keystrokes, or can be effected without any keystrokes at all through rudimentary voice processing and recognition techniques.

If appropriate internal memories and data communications capabilities are added to the caller's phone, it is further possible to minimize the number of keystrokes required of the caller and significantly enhance the quality of information conveyed. Particularly, callback and related caller identification information can optionally, as routine practice, be stored by the caller into his or her phone before calls are made and thus be available for transmission at any time during any call. In this case where a memory in the caller's telephone rather than in the central office switch supplies this callback and identifying information, the net effect is a decentralized, user-customized form of caller identification, not requiring any caller ID capability in the switch itself, which allows a user to customize his o her own callback and identifying information with a rich combination of character, sound, facsimile, pictorial and video information, and to precisely determine and control the level of caller identification privacy desired. As noted earlier, many people do not realize that the memory for frequently-dialed numbers found in many telephones today can already be used to store and send as DTMF digits the caller's own phone number, thus forming the rudiments of such a user-customized caller identification capability.

Thus, in the directory assistance example, the primary telephone user calls directory assistance and asks for a telephone number to be conveyed to him or her, not verbally via a voice robot, but electronically via a DTMF emitter or similar encoding device such that the number is then stored directly into the memory of his or her telephone. The primary user then utilizes the memory recall to dial the number without ever having to write it down, which is particularly advantageous when driving a motor vehicle. If the number is busy, or the called party is not available, it can be called back at a later time without going again through directory assistance, averting one of the problems of call completion. If the user does not wish to place the call immediately, the number is retained for redial as long as the user wishes. As mentioned earlier, optionally a character string and other identifying information to be associated with that number could also be transmitted and stored in memory. With appropriate memories added to the directory assistance station, this identifying information can contain a full combination of character, sound, facsimile, pictorial and video information. Also, optionally, a selection signal may be sent from the telephone to the server indicating whether or not it is desired to receive such a character string and other information. The same approach of transmitting a phone

number via a DTMF emitter or similar encoding device can also be used to advise a caller that the called number has been disconnected and changed to a specified new number by encoding and transmitting that new number accompanied by other, optional information. It can also be used to advise a caller that further information can be obtained by calling a different, specified number, by similarly encoding and transmitting that number with other optional information. If the enhanced user information stored in association with telephone numbers in any of these directory assistance applications has an associated password code as well, then the person to whom that number belongs, by supplying the correct password code, can uniquely customize the directory assistance information associated with that person's own number. If the user's phone has the ability to process numeric voice utterances and translate them into digits, it is possible to transfer numbering information to the primary user's phone for subsequent redial via the usual voice signals of a voice robot.

In the answering machine/caller ID example, a caller is given the opportunity not only to leave a voice message, but to supply a number to which the call should be returned (which can also be that of a third party) or to have a caller ID system determine the caller's number and record this number on or with the stored message. In either case, the number itself is electronically stored on the tape or other memory device, along with the usual oral message. The caller also may optionally supply a character string and other user-customized caller identification information which can be stored in the answering machine/caller ID box, or such character string and other caller identification information which might be supplied as a mnemonic or other accompaniment to a caller ID. Then, when the primary phone user calls the answering machine from a remote location to receive messages, the primary user might conclude by sending a control signal to the answering machine asking it to transmit and download some or all of the stored numbers to the memory of his or her phone, along with any identifying character or other enhanced user information that may have been recorded. The same approach can be used in voice or electronic mail applications. At that point, the primary user can place calls with a simple series of memory-recall based dialings, without writing any of these numbers down or manually entering them in order to make a call. And again, voice processing and recognition methods can facilitate such memory recall even further, completely obviating the need for any manual activity. Accompanying character strings and other identifying information make this particularly convenient, by identifying for the primary phone user which numbers are in which memory locations, but again, these are not strictly necessary. Also, optionally, the caller's keystrokes can be reduced or eliminated if identifying numbering, character, and possibly sound, facsimile, pictorial and video information is already stored in a memory within the caller's phone such that it can be transmitted at will, in essence, comprising a user-based, rather than switch-based form of decentralized, customized caller identification. If the answering machine has the ability to initiate calls to the primary user's telephone upon certain conditions, it becomes possible for the primary user to establish a customized, end user equipment-based form of paging service, without the need for subscribing to a centralized paging service separate from ordinary telephone service.

In the personal computer/smart television example, a secretary may enter telephone calls and associated character strings into a computer throughout the business day as calls come in, as particular calls are identified that need to be made, etc. The primary phone user then calls the secretary, asks for messages, and asks that any of the numbering and other information accumulated in the computer be downloaded into his or her telephone memory. These messages may already have been ordered in the computer by the secretary or by a user preference profile in a certain manner so as to suit the primary user's calling preferences and priorities. Once the download transmission is complete, the primary user can engage in the memory-based dialing of numbers, without paper recording and without manual number entry.

Coupled with voice processing and recognition techniques, manual keystrokes to effectuate this memory redial also become unnecessary. A process that could take many minutes manually, and would require pulling a motor vehicle off the road if the primary user is driving, could be completed in seconds and allow the primary user to continue driving without interruption.

In the example of another telephone user, the primary user, for example, might be driving an automobile while engaged in a phone conversation with a second user located at a desk. The primary user agrees to call the secondary user back in an hour with further information about whatever they are discussing. But the secondary user says he or she will be at a different number in an hour. Rather than verbally communicate this number, the secondary user, with hands free at a desk, can punch in an appropriate series of keystrokes to download that number to the phone memory of the primary user, while the primary user's hands remain free to drive the car. (The primary user, with sufficient foresight, may already have entered this number into the frequently-dialed number memory, and can then simply recall and send the DTMF tones corresponding to this number directly from memory.) When calling back in an hour, the primary user has never had to write the number down, and can signal the number directly from memory via memory recall, rather than manually. Again, coupled with voice processing and recognition techniques, manual keystrokes to effectuate memory redial also become unnecessary, further enhancing utility. And again, the caller's keystrokes can be reduced or eliminated if identifying numbering, character, sound, facsimile, pictorial and video information is already programmed into the caller's phone, in essence, comprising a user-based, rather than switch-based form of decentralized, customized caller identification. Finally, if the primary user subscribes to a paging service, and his or her pager is supplemented with a telephone that can recall and dial telephone numbers in the pager memory (with appropriate number transformation, e.g., trimming area codes or adding a "1" in front of area codes as required), then the need can be completely eliminated to find a separate telephone, read a number off of the pager display, and then punch in and signal that number.

While all of the examples cited thus far involve briefly suspending an ongoing phone conversation to download one or more telephone numbers from a remote location into the primary user's telephone, this approach is readily supplemented and made even more useful if the telephone is combined with the functionality of a more traditional paging device, with optional functions akin to those of answering machines and/or caller ID boxes. For example, the primary user may have left such "paging telephone" in the car for a few minutes, during which time a call is received. The call can be written into the phone's memory just as numbers are written into the memory of a pager, but importantly, in such form as to allow the primary user to immediately redial from the paging telephone's memory locations once he or she returns to the telephone without manually redialing from a separate telephone, and without the need for a paging service that is distinct from one's telephone service. Further, if the paging telephone is set to work in paging mode after, say, four rings, and if the primary user is present while the phone is ringing, then the user has the option to use the this device similarly to a phone or a pager. By picking up before the fourth ring, the user can converse immediately, and during the conversation use the invention to download numbers from any remote number source in the usual manner. But by letting the phone continue after the fourth ring, (or perhaps by earlier pushing a button on the keyboard or by setting the phone to automatically pickup as soon as it detects and incoming call, i.e., by "zero" being the number of rings or the elapsed time required to activate paging) the primary user automatically selects a "paging" rather than "telephone" mode, wherein the ringing (beeping) itself alerts the user to the call, and the number sent by the caller is stored in the phone memory to be used for later redial and perhaps displayed on the screen and even combined

with some form of voice mail / answering machine message. Importantly, unlike a traditional pager, this paging telephone can be engaged by the user to perform memory redial at a later time directly from the stored number. Further, once the phone goes past the fourth ring and, for example, the caller's number is displayed on the screen in paging mode and/or the user starts to hear a voice message being recorded, the primary user might wish to pick up the call immediately, before the connection is terminated, thereby switching back to telephone mode. In this instance, the paging phone performs similarly to a caller ID box or answering machine as well. A message indicator may be used to let the user know that a call has arrived. And again, all of the intelligence for this to occur is placed in the end user devices, so that no special services beyond ordinary phone service are required.

This approach can also be varied by attaching an acoustical DTMF tone generator to the telephone. In this instance, a number is received by the telephone, and when the telephone user wishes to return the call, he or she can pick up a separate telephone, establish a dial tone, and then use the telephone to generate the acoustical DTMF tones corresponding to the number in the telephone memory while holding the telephone near the mouthpiece of a second telephone, while that second telephone is sounding a DTMF-responsive dial tone. This activates a callback without the need for dialing a number, but does require access to a second phone that is separate from the original phone. While such DTMF tone generation capability responsive to an internal phone number memory does already exist for some pagers, it does not exist on ordinary phone devices operating independently of a paging network.

It is also helpful, and facilitates a broad range of voice processing applications, if the telephone used by a primary user or a caller (secondary user) in connection with this invention, contains a "voice keyboard" allowing voice intonation of the name of any alphanumeric or function key to have precisely the same effect as if the corresponding key was pressed on the ordinary manual keyboard. This voice keyboard would be "trained" to recognize one vocal signal corresponding precisely to each keyboard key, from the user of that telephone. Such a keyboard can make the use of the primary user's telephone entirely hands-free.

Another variation of this invention involves call waiting. In this variation, a phone user might receive a signal indicating a call waiting, but would also have a phone number emitted either by the waiting caller or by a caller ID system read into the memory of his or her telephone, possibly along with other information indicating who is calling. Once again, this would enable the phone user to call that number back at a later time without having to write down or enter the number.

There are also some useful variations on the answering machines and related server devices that send telephone numbers to the user's telephone. For example, as noted briefly before, a server device could have the capability to itself initiate a call to a specified user telephone when some specified condition occurs. For example, the server could call the telephone after five calls have been received since the last time the user checked the server. Or it can dial the user when a particular expected call has arrived. Or it can dial the user based on some more complex set of conditions that the user defines to establish the circumstances under which he or she does or does not want the server device to automatically initiate a call to his or her telephone. If the server is set to automatically signal the telephone whenever a call comes in, and if the telephone has some of the paging-type functionality recently discussed, then the server itself, in effect, becomes a user equipment-based paging service.

Also, a telephone with the functional capability of receiving an emitted telephone number over the connection from a server and strong that number in memory for later redial can easily comprise a facsimile machine, a personal communications system, a personal computer, a personal digital assistant, or any other device which can be logically

embedded into a single unit that includes this functional capability.

In short, the number or numbers which a primary telephone user needs in order to make a call or series of calls may reside in a telephone directory, with a directory assistance operator, on an answering machine or caller ID box, in an electronic or voice message, on a personal computer in the office, on a piece of paper on the secretary's desk, with another user of the telephone system, on a pager display, and in many other settings not explicitly noted here as examples. In all of these cases, if the primary user is not physically at the same location as the person or device which has the desired phone number, then the user is almost always required to contact the person or device where the number does reside, make a physical written notation of the number, and then manually enter the number into the telephone in order to complete a call. While driving a motor vehicle, this is unsafe. For a disabled individual, this may be very difficult. In many other situations, particularly involving multiple calls, this is highly inconvenient and time-consuming. The arrangement disclosed herein obviates the need to ever make a written record of telephone numbers prior to dialing, by enabling the telephone user to download such numbers into the memory of his or her telephone from a virtually limitless number of potential sources, in a highly dynamic way, and to then dial those numbers directly from the telephone memory at will.

The arrangement disclosed here in all cases frees the phone user from the task of manually entering telephone numbers into memory (aside from the entry of ordinary frequently-dialed numbers), and reduces and in some cases eliminates the number of keystrokes generally required to use a telephone. The entry of a telephone number into memory as described herein is controlled not by the primary user, but by a remote number source (server) which downloads one or more numbers to the primary user's phone memory without any manual action on the part of the primary user. This enables the primary user to receive and record phone numbers in a totally hands-free manner. Further, the dialing of such numbers can be achieved by a simple memory recall of one or two keystrokes, rather than by the more cumbersome entry of a full seven-or-ten digit phone number. Coupled with voice processing and recognition techniques, memory recall can be achieved without any keystrokes at all. In addition, this invention potentially enables dozens of phone numbers to be downloaded to the primary user's phone in a matter of seconds, whereas such a task would take many minutes and involve the suspension of other activities such as driving a car, if the primary user was required to jot down and then dial such numbers manually as at present. It also greatly facilitates phone use by individuals with physical disability.

BRIEF DESCRIPTION OF THE DRAWING

The features of the invention believed to be novel are set forth in the appended claims. The invention, however, together with further objects and advantages thereof, may best be understood by reference to the following description taken in conjunction with the accompanying drawing(s) in which:

FIG. 1 illustrates the overall scope of the invention, including the "primary user" and his or her telephone, examples of various "remote number sources" and devices (servers) from which this user can automatically obtain telephone numbers, and the general connection among all of these via any standard switched telephone network;

FIG. 2 illustrates how control over internal memory of the primary user's conventional telephone is modified in order to be able to receive number and character information from remote number source devices, so as to enable the remote number source, rather than the primary user, to control number entry into the phone's memory;

FIG. 3 illustrates the type of communications sequence and information packets that are exchanged between

the primary user's telephone and the remote number source to implement the basic invention, and the overall operation of the "handshake/signal manager" that allows for remote control over the entry of numbers into the phone's memory;

FIG. 4 illustrates appropriate modifications to existing directory assistance services to allow for remote transmission of telephone numbers to the primary user's phone memory, as well as the general usage scenario for this application;

FIG. 5 illustrates appropriate modifications to existing answering machine/caller ID boxes as well as voice mail and electronic mail applications to allow for remote transmission of telephone numbers to the primary user's phone memory, as well as the general usage scenario for this application;

FIG. 6 illustrates appropriate modifications to a computer/smart television-based system to allow for remote transmission of telephone numbers to the primary user's phone memory, as well as the general usage scenario for this application;

FIG. 7 illustrates how another ("secondary") user's touch tone phone without any of the modifications of this invention, can be used to allow for remote transmission of telephone numbers to the primary user's phone memory, as well as the general usage scenario for this application;

FIG. 8 is a flowchart illustrating possible operation of a device that combines through an ordinary switched telephone network the operations traditionally associated with separate telephone and paging devices, optionally incorporating answering machine and caller ID features as well;

FIG. 9 is a flowchart illustrating a call waiting variation of the invention;

FIG. 10 is a flowchart illustrating initiation of a call by a serving device based on certain call initiation conditions; and

FIG. 11 illustrates a possible schema for sending character data associated with a phone number from a standard telephone keyboard.

FIG. 12 illustrates a "voice keyboard" that eliminates the need for manual operation of the telephone even for recall and redial of telephone numbers transferred in this system.

FIG. 13 illustrates a memory storage and recall system for telephone numbers transferred and signalled in this system, further based on the use of voice processing techniques.

FIG. 14 illustrates the use of a voice translator enabling telephone number digits to be entered and transmitted in voice form and then translated into coded form for memory recall and signalling.

FIG. 15 illustrates how adding a telephone number memory and other enhanced user information memories to a caller's phone greatly facilitates the caller's use of this invention by reducing or eliminating keystrokes and results in a user-customized and controlled form of caller identification.

FIG. 16 illustrates the data communication sequences enabling transfer of the user-customized caller identification information illustrated in FIG. 15.

FIG. 17 illustrates an "inverted use" application of this system wherein a server user can call a remote telephone with conference call capability and use the telephone to dial a series of calls, for example, to significantly reduce toll charges.

FIG. 18 is a block diagram illustrating the primary embodiments and variations of the overall invention, and forms the basis for a final detailed discussion of these primary embodiments and multiple variations thereof.

DETAILED DESCRIPTION OF THE INVENTION

FIG. 1 illustrates the overall scope and key features of the system. To the left of the figure (and most subsequent figures) is the primary user. This user has a telephone containing an internal memory for storing phone numbers and possible associated character information, and a display screen which in this illustration shows one selected number. Of course, the display screen can be arranged in many different ways. Residing in the phone memory, illustrated at the lower left, are nine telephone numbers (numbers) and character strings (characters) that the user has automatically downloaded into the phone's numbered memory locations ("mem") from the variety of "remote number sources" and devices (servers) shown to the right of the drawing and discussed below. The user can dial any one of these stored numbers using a standard memory recall. The downloading takes place through standard digital, touchtone (DTMF) or other signalling methods. Toward the upper left, a digital pulse and a series of musical notes signify digital and touch-tone signalling. These signals are transmitted to the primary user's phone over a variety of transmission devices, such as telephone lines, satellite communications, microwave communications, wireless spectrum communications, and other established transmission media (e.g. coaxial cable), in varying combination, as part of a standard, switched telephone network. The source of phone numbers can vary, though the four remote number sources illustrated are a directory assistance operator (who is sending the necessary signal to download the number for the Walmart store), a standard telephone answering machine, caller ID box, or voice/electronic mailbox (which has recorded and/or electronic messages from and is sending the numbers for Smith, Jones, Bob, and the doctor), a personal computer or smart television (into which the primary user's secretary has entered numbers for a customer, the boss, and the primary user's wife, all of whom want the primary user to call them), and the telephone of another (secondary) user (in this case, the primary user's mother, who is downloading the number where that user can reach her later in the day). The dots at the lower right indicate that this is merely illustrative, and that other devices can be conceived which would fit equally well within the scope of this invention. For example, the remote number source can easily be the server in a paging service, wherein the numbers downloaded into the phone from the paging service server can be used directly from the phone's memory for recall and signalling purposes.

While this and most later illustrations depict the transmission and storage only of telephone numbers and associated character strings into the primary user's telephone for later redialing, the range of such transmitted and stored information providing a callback number and identifying the caller and the purpose of the call can easily be expanded to encompass electronic mail and other forms of textual message, voice mail and other forms of audible sound associated with the message, facsimile information, pictorial icons, and video information -- in short, enhanced user information -- as will be described more fully in connection with FIGS. 15 and 16. While the connection shown in this and later illustrations is a standard telephone connection, this type of telephone number and related identifying information transfer can easily take place over, say, a narrowband or broadband ISDN link, or a broadband link of any bandwidth. With these higher-bandwidth connections (which may be desirable for more data-intensive enhanced user information transfer), the telephone number and related identifying information can be sent over a data channel while the voice conversation is conveyed over a voice channel. While the primary user is shown in this and later illustrations to have a telephone, a telephone with the functional capability of receiving an emitted telephone number over the connection from a server and strong that number in memory for later redial can easily comprise a facsimile machine, a personal communications system, a personal computer, a personal digital assistant, or any other device which can be logically embedded into a single unit that includes this functional capability. While the illustrations depict telephones with an

ordinary manual keyboard, it is advantageous and facilitates hands-free use of this invention for these telephones to also contain an optional "voice keyboard," allowing voice intonation of the name of any alphanumeric or function key to have precisely the same effect as if the corresponding key was pressed on the ordinary manual keyboard. This voice keyboard would be "trained" to recognize one vocal signal corresponding precisely to each keyboard key, from the user of the telephone. While the illustrations show telephone number information transmitted in DTMF or other coded form, it is also possible, for example, to transmit digits and (even alphanumeric characters) in voice form, if a device in the system is fitted with a voice recognition device that translates numbers intoned by the caller into machine-readable digits that can then be used by the primary user's telephone for subsequent redial (and storage or output display of coded alphanumeric information).

In this illustration, each phone number is simply downloaded into the next available (empty) memory location, and the memory used for this arrangement is the same memory used presently for memory number storage in existing phones (with added space for an identifying character string). Other approaches could also be used, however. For example, the primary user could tell the number source or the telephone which memory location a particular number should be entered into, and this memory location designation could then be part of the information signal or packet sent from the remote number source to the primary user's telephone, or supplied by the primary user's telephone itself. Or, the remote number source can itself direct the storage of numbers into particular storage locations. Telephone memories may be designed with a separate area for this type of dynamic, remotely controlled storage, or they may be designed so that the remotely-transmitted numbers can occupy the same storage areas as frequently-called numbers directly entered by the primary user on commonly-available telephones. In a more sophisticated "random access" system, the primary user can utter a voice pattern which is stored in association with the number. When the user again utters the same pattern at a later time, that associated number can be called up and positioned for signalling without the user ever having to manually contact the keyboard and without concern for which memory location stores the telephone number. Or some other item of enhanced user information (e.g., a simple character string) can substitute for or supplement the role of this voice pattern to enable such random access.

In this and later illustrations, phone numbers are also displayed as an area code plus a seven-digit number within a local exchange. Of course, the phone would need a means to avoid signalling an area code for an in-area call, and would conversely need to place a "1" in front of the full number for a long-distance call. One means to accomplish this is to store an area code in the phone corresponding to the phone's own area code, to match this area code against those of incoming numbers, to trim the area code from an incoming number in the same area code, and to place a "1" in storage, in front of numbers representing out-of-area calls. Similar number processing methods could be used, for example, to accommodate international dialing digits and any prospective modifications to the NANP. If codes are introduced that cause a pause of several seconds between the dialing of two digits, this system could also accommodate the transfer, storage and redialing of telephone numbers with extensions, wherein the main number is dialed, a pause occurs to give a DTMF-responsive device necessary time to be activated at the receiving end, and the remaining extension digits are then dialed to connect to the desired extension via the DTMF-responsive device. The resumption of dialing could be based on an elapsed time, a user commend to resume, or in response to a signal from the device being called that dialing may be resumed.

It will be appreciated that it is helpful to employ a number verification signal to the server over the connection, with the server emitting a verification confirmation signal to the telephone over the connection, said confirmation signal

indicating that the telephone number sent by the server has been properly received by the telephone.

FIG. 2 depicts the keyboard and memory of the primary user's telephone, as well as a "handshake/signal manager" that contains the critical hardware and/or software required to allow remote downloading of the telephone's memory by a variety of remote number sources. Normally, the storage of telephone numbers (and optionally, of character codes and other identifying information, not depicted here) into memory is controlled by the user's keyboard. (Most keyboards have more function keys than are shown here. The ones shown are sufficient to illustrate the system.) For example, to enter the number (518)234-5678 into memory location number 2, the primary user might ordinarily push the key sequence MEM 2 5 1 8 2 3 4 5 6 7 8. Importantly, however, the same number is downloaded into memory from a remote number source, rather than by the primary user's operation of the keyboard. It is necessary therefore, to allow the remote number source to gain control over entry of data into the phone's internal memory on precisely the same terms that the primary user can control memory entry through the keyboard. Thus, the phone needs a simple switch (labelled "or") that determines whether the phone is taking its command and control signal from the keyboard or from an external source, as well as a hardware or software device, the "handshake/signal manager" which establishes and controls digital communication with the remote number source and ultimately allows the remote source to gain control over the phone's memory functions.

This "handshake/signal manager," which is ideally designed as part of an application-specific integrated circuit or as part of the software of a processor, forms part of the telephones and other devices as discussed below, and combines two primary technical functions, as illustrated in FIG. 3.

First, the primary user's telephone must establish a recognizable dialogue with the remote number source, so that both are following the same protocols in communication and properly recognizing the signals and information being sent back and forth. Telephones and remote number sources conceivably produced by different manufacturers with somewhat different operational parameters, need to find some method of communicating properly with one another. This is referred to as the "handshake." A similar "handshake" or "polling" interaction is used, for example, to establish communication among a wide variety of facsimile machines, and among various types of computer modem and related communications hardware and software. These polling signals are familiar to anyone who has ever heard the tone on the other end of the telephone line when dialing up a facsimile machine. Thus, using the same components and methods that are used to establish facsimile, modem and related communications, the primary user's telephone exchanges a series of polling signals with the number source, so that a proper communication can be established between the two devices.

Second, once proper communication has been established between the devices, the "or" switch gives control of the primary user's telephone to the external number source, which may then send precisely the same sorts of control signal to the memory that the user ordinarily sends directly from the keyboard. This "signal manager" may use the same components and methods that are used, for example, when a person calls his or her home telephone answering machine, punches in a special code that provides remote touch-tone control over the answering machine, and then by a series of touch tones can direct the machine to play back messages, record new messages, rewind or fast forward the tape, and many other options. Each command and control signal that the user sends while remotely controlling the answering machine has precisely the same effect as if the user were standing right next to the answering machine and had physically pressed one or more buttons on the answering machine itself. The same methods and devices that are used to remotely control an answering machine (and, e.g., a thermostat) are used to control the primary user's telephone from a

remote location, and particularly, to direct telephone numbers (and optional character and other identifying information) into the phone's memory for later use in memory recall dialing. Once the number has been stored in memory, it does not matter whether it initially came from the keyboard or the remote source. In either case, a simple memory recall, involving two keystrokes in this illustration (RCL 2, lower right in FIG. 2), will recall the number for dialing. As discussed later in connection with FIGS. 12-14, the use of various voice processing and recognition techniques can simplify this process even further by eliminating the need for the primary user to enter any keystrokes whatsoever when recalling an emitted number from the phone's memory. Further, as will be discussed, this system greatly expands the utility of even the most rudimentary voice processing and recognition techniques.

FIG. 3 further illustrates how the handshake and signal management of the primary user's telephone might take place. Step 1 is the handshake to establish communication. In a), b), c) and d), the primary user's telephone and the remote number source device poll each other in a handshake sequence to determine what type of device they are communicating with at the other end, much like the exchange of audible tones that are emitted when two facsimile machines or modems establish communication. Once the protocols for communications are settled, e), the handshake signal manager activates the "or," f), to switch to receive memory commands from the remote station and remote digital control of the primary telephone can begin.

Step 2 involves signal management and transmission, which is when the actual numbering information is transmitted. Many different formats for communicating message packets can obviously be employed. In the format shown here for illustration, the remote device begins by sending a START code followed by MEM 1, which is a request to place a number in memory location 1. The primary user's phone replies with FULL, indicating that there is already a number (HOME) stored in that location. The remote device then attempts MEM 2 and determines that it is VACANT. At that point it sends a function code NUMBER indicating that the signals to follow should be interpreted as the actual phone number to be stored in memory location 2, followed by 518 234 5678, the number itself. Then, the function code CHAR precedes an (optional) character string JONES, which accompanies the number into a memory location 2, expanded to hold character information. The sequence is repeated again for other numbers (BOSS in the illustration), until an END signal is sent from the remote source to the primary user's phone. At that point, an OK from the primary phone establishes successful completion of the transmission. Memory recall for dialing thereafter follows the same method as always. Note that this is not unlike the sequence that is used in a paging system to download a number and character information from a paging system server to a pager, but it operates from many different types of end-user equipment.

FIG. 4 illustrates the straightforward alteration required for directory assistance application of the system. Current directory services already operate from a computer containing a directory in its memory, which is also connected with a voice robot that recites the digits "one," "two", "three," etc. Based on the database entry retrieved for a particular phone number, the appropriate digit vocalizations are combined and relayed in voice form to the primary user as a telephone number. Among the devices required for this invention at the directory assistance station are a straightforward "tone robot," as well as the handshake/signal manager (henceforth, HSM) discussed in FIG. 2 and FIG. 3. The tone robot substitutes appropriate touch tones for the vocalization of individual digits and serves precisely the same function in the overall directory assistance system as a voice robot. The HSM, as discussed above, performs the polling/handshake sequence to establish digital communications with the primary user's phone at the other end of the connection, and then packages and sends these tones out to the primary user in appropriate fashion (optionally including

character strings), following the types of interactions illustrated in FIG. 3. Again, this type of interaction is commonplace in computer-to-computer, fax-to-fax, and other communications. With appropriate memories added to the directory assistance station, this identifying information can contain a full combination of character, sound, facsimile, pictorial and video information. Finally, in a simple variation, the operator can choose whether to send a voice number, a tone number, or both.

A very similar system can also be used to advise a caller that a called number has been disconnected and changed to a specified new number by transmitting that new number with other, optional accompanying information, after a call to the disconnected number causes a lookup of the associated newly-activated phone number from a newly-activated phone number memory containing such numbers. It can also be used to advise a caller that further information can be obtained by calling a different, specified number, by similarly transmitting that "further information" number with other optional information.

As a further variation, if the enhanced user information stored in association with telephone numbers in any of these directory assistance applications has an associated password code as well, then the person to whom that number refers, by supplying the correct password code, can uniquely customize the directory assistance information associated with that person's own phone number. In effect, this could enable user-customized, on-line, real-time, interactive, "yellow page-type" advertising directories, and similar variations of telephone directories. In connection with the "further information" application, this could establish a phone-based advertising service wherein various advertisers provide telephone numbers to the service, and control information about themselves provided in association with their telephone number, to people who call into the service for information. Obviously, the entity maintaining such directories may charge a fee to a caller so-customizing this information, similar to charges for advertisements in yellow pages, publications, etc.

As another variation, the primary user's phone can be fitted with a voice processing device that translates vocally intoned numbers into machine-readable digits that can be used for subsequent redial.

FIG. 5 illustrates a straightforward variant of a telephone answering machine combined with caller ID capability. A caller (Steve) calls the machine and gets the usual voice greeting message, but is also asked to punch in a number to which the callback should be placed, and to punch in some codes for his name, and is also advised that caller ID is operating. It is standard practice for answering machines to contain variable-length records with fields delimited by START and END, or similar codes. By augmenting existing tape or memory writing circuitry to create a few more codes, additional variable-length fields can be defined on the tape or memory to hold, for example, a phone number and a character code, and by straightforward extension, other sound, character, facsimile, pictorial and video information (i.e., enhanced user information). Thus, after leaving a voice message, the caller (Steve) in this illustration punches the necessary keys to add a callback number and character data to the tape recording on the answering machine, while caller ID sets up a field for the phone from which Steve is presently calling. Subsequent messages are similarly stored. As in the prior examples, the HSM handles any handshakes and signal transmissions required to establish and engage in digital communication with the caller's phone. A tone robot, similar to the one described in connection with FIG. 4, generates the actual tones sent from the answering machine to the primary user's phone, when the primary user sends a remote control signal to the answering machine asking it to download the numbers. Once the primary user (Bob) calls for messages and then requests the machine to send him the numbers, he receives the callback data directly into his phone as outlined in previous examples. Exactly the same process could be followed for voice and electronic mail

applications. It is important to note (with the exception of more advanced enhanced user information transmission) that the caller (Steve) does not have to have anything more than an ordinary touchtone phone at his location, i.e., he does not need this invention at his phone to place information onto Bob's answering machine. All that matters is that Bob has the apparatus on his phone and answering machine. If Steve has already stored his own callback number into his phone's frequently-dialed number memory (say, in memory location 1), then he can avoid punching in the individual digits # 1 518 222 3333 and instead just punch in something like # 1 RCL 1 SEND (i.e # 1 telling the answering machine that a DTMF number follows and should be stored in coded form, RCL 1, recalling Steve's own callback number from memory, and SEND actually emitting the digits). And if the phone should have a voice keyboard, such manual keystrokes can be eliminated entirely.

While FIG. 5 illustrates the transmission and recording of a voice message, a phone number and a character string, it is again noted that any form of text, sound, facsimile, pictorial and video information can be readily transferred and stored in a parallel manner, though higher-bandwidth, ISDN-type connections may be desirable for some of this information -- video in particular. And, of course, both the caller's and the primary users' phone would have to be modified so as to include such an advanced enhanced user information capability. As a variation, the answering machine or caller ID box can be fitted with a voice processing device that translates vocally intoned phone numbers and alphanumeric characters into machine-readable digits and characters for transmission in coded form to the primary user. Or, the primary user's phone can be fitted with such a voice processing device so that the vocally intoned digits and alphanumerics can be stored on the answering machine or caller ID box, sent to the primary user's phone, translated into machine readable form, and then used as the basis for subsequent redial.

FIG. 6 illustrates the straightforward alteration of a personal computer or smart TV to use such device as the remote number source. As with the earlier figures, the key component is the HSM to manage handshaking and signal transfer between the computer/smart TV and the primary user's telephone. Also needed is highly straightforward computer phone management software that the computer user can utilize to accumulate and prioritize phone numbers for later transmission. In this application, which is particularly advantageous in a business or office setting, the primary user's secretary, for example, enters all calls received over a period of time into the computer/smart TV, for later transmission the next time the primary user is in touch with the office. The computer phone management software allows addition, modification, deletion, re-ordering, and various other straightforward operations with respect to the phone numbers so entered. When the primary user asks for the calls to be downloaded, a simple keyboard command to transfer activates the HSM, which handshakes with the primary user's telephone to establish digital communication, and then engages in the necessary signal transfer with the primary user's telephone to transfer the phone numbers and related character information, as outlined in FIG. 3. Tones are generated by the same tone robot described in connection with FIG. 4 and FIG. 5. For people frequently out of an office and in transit, who need to return large numbers of phone calls, this application can be a very large productivity enhancement. If the personal computer or smart TV is also connected to an incoming call (a combination of the functionality of FIGS. 5 and 6), then it would be possible for this device to take caller identification information from both the keyboard (i.e., the secretary) and the connection (i.e., the calling party's telephone). This is particularly useful for downloading information stored in the caller's telephone into the personal computer or smart TV.

FIG. 7 illustrates how a secondary user's ordinary touch tone telephone, without any modification whatsoever, can be used to allow remote number transfer from that user's phone to the primary user's phone. In this illustration,

"mom" sends to "son" the number he should call her at tonight simply by dialing in a series of touch tones. Here too, as in FIG. 5, it is important to note that "mom" needs nothing more than an ordinary touch tone phone to send the number to "son." Only "son" needs to have this equipment on his phone in order to receive the number from "mom." And of course, "mom" might already have stored her callback number into the frequently-dialed number memory, reducing the number of keystrokes she must make during the call. As a variation, if the either phone has a voice processing device, then digits and alphanumerics vocally intoned by the secondary user can be translated from voice into machine readable form for storage in the primary user's phone, and then used as the basis for subsequent redial.

While all of the examples cited thus far involve briefly suspending an ongoing phone conversation (often initiated by the primary user) to download one or more telephone numbers from a server at a remote location into the primary user's telephone, this approach is readily supplemented and made even more useful if the telephone can also act similarly to a more traditional paging device, with optional functions akin to those of answering machines and/or caller ID boxes, as illustrated FIG. 8. In this application, the primary user is always the call recipient. The HSM in primary user's telephone would optionally include or be supplemented by a "page/phone selection controller," which automatically picks up the phone after an automatic call pickup status condition has been detected, such as a specified number of rings (which could be "zero," i.e., which, like a pager, always picks up the call on detection of an incoming call, or non-zero), an elapsed time period (which could be "immediately," again, like a pager, or a finite time period), a command received from the keyboard, or the caller ID information associated with a call fitting a particular user-defined profile, and stores in the phone memory an emitted telephone number which can subsequently be used to perform a memory redial, and possibly character information provided by the incoming call. This information can even include a voice recording or other enhanced user information. An answering machine-type message on the phone, or a tone or similar indicator emitted by the phone to the server over the connection, can tell the caller or the server to transfer the phone number and other enhanced user information to the phone. If the primary user picks up the phone before the specified number of rings or elapsed time without commanding the phone to do otherwise from the keyboard, the selection controller causes the device to act as a telephone. If, however, the phone has been automatically picked up, the number may be displayed on the screen (perhaps supplemented by the in-progress recording of a voice message audible to the primary user through a speaker, the display of a pictorial icon, or something similar), and the primary user might optionally wish to pick up the call immediately, before the connection is terminated. If so, the selection controller would switch the paging phone back to telephone mode. In this instance, the paging phone performs similarly to a caller ID box or answering machine, where the user can pickup or not pickup a call depending on who is identified as the caller. Afterwards, the user could then choose to retain or not anything that has thus far been stored in the various memories in the usual manner for such devices.

As discussed, FIG. 8 combines telephone and paging functionality into a single device such that a phone number transferred to and stored in this "paging telephone" can be subsequently redialed from the telephone number memory, and optionally enhances this device with traditional answering machine or caller ID functionality. A phone device resembling a more traditional pager, absent a telephone, can instead be supplemented with an acoustical DTMF tone generator which emits tones based on the contents of the phone memory. In this variation, a phone number is received by the phone, and when the phone user wishes to return the call, he or she can pick up a separate telephone, establish a dial tone, and then use the attached acoustical DTMF generator to generate the acoustical DTMF tones corresponding to the number in the phone memory while holding the phone near the mouthpiece of the separate

telephone. This also activates a callback without the need for ever dialing the telephone number, but does require access to a second phone that is separate from the primary user's phone. Again, while such DTMF tone generation capability responsive to telephone numbers received into memory does already exist for some pagers in paging networks, it does not exist on ordinary phone devices operating independently of a paging network.

FIG. 9 flowcharts a call waiting variation of the invention. In this variation, a phone user might receive a signal indicating a call waiting, but would also receive a phone number emitted either by the waiting caller or by a caller ID system into the memory of his or her telephone, optionally along with other user-customized information indicating who is calling, including character, voice, facsimile, pictorial and video information, and / or a caller ID signal. This could enable the user (or the telephone, based on matching a caller ID signal to a particular user-defined profile) to determine whether or not to interrupt the present call to pick up the call waiting, and in any event, would once again enable the phone user to call that number back at a later time without having to write down or enter the number.

FIG. 10 flowcharts some useful "call initiation" variations on answering machines and related server devices that send telephone numbers to the user's telephone. For example, a server device could have the capability to itself initiate a call to a specified user telephone (the telephone number of which is stored in the server) when some specified condition occurs. For example, the server could call the telephone after five calls have been received since the last time the user checked the server. Or it can dial the user when a particular expected call has arrived. Or it can dial the user based on some more complex set of conditions that the user defines to establish the circumstances under which he or she does or does not want the server device to automatically initiate a call to his or her telephone. If the phone user, for example, has the type of paging phone with automatic pickup as described in connection with FIG. 8, the user could receive messages at his or her home answering machine, office computer or similar server devices, have the phone numbers and other information from these messages automatically downloaded to a paging phone in the glove compartment of his or her car, and arrive back at the paging phone to find all of his calls already on this device, simply waiting to be dialed directly from the paging phone's memory.

An important variation of this invention combines the basic "caller to server to primary user" arrangement of FIG. 5 with the automatic call pickup features of FIG. 8 on the primary user's telephone and the automatic call initiation features of FIG. 10 on the server. Particularly, by setting the server to initiate a call to the primary user's telephone any time it receives a call (i.e., by setting the quantity of calls needed for server initiation of a call to be equal to "one"), and by setting the primary user's phone to automatically pickup an incoming call immediately and store the emitted number straight into memory without any intervention by the user, a user can establish his or her own paging service based completely on his or her own end- user equipment, and without any need whatsoever for a centralized paging service. The primary user's server acts just like a paging service receiving and forwarding callback numbers for incoming calls as they are received, and the primary user's phone acts just like a pager, storing callback numbers straight into memory as soon as they are received. Unlike in a paging service, these numbers can also be later recalled and signalled from the telephone's memory.

Of course a related variation of this invention also includes the situation where a pager in a more traditional, centralized paging service is combined with a telephone allowing memory-based signalling of telephone numbers in the pager's telephone number memory.

FIG. 11 illustrates a possible schema or protocol for sending character data associated with a phone number from a standard telephone keyboard. While such character data is optional, it does add to ease of use, and is perhaps

the most rudimentary form of "enhanced user information." If the sending source is a computer or other device with a full alphanumeric keyboard, character data can readily be sent without difficulty. However, in the event that the sending source is a telephone device with ten digits plus a few function keys, the transmission of character data is less straightforward. The schema in FIG. 11 is illustrative of one way to do this. Others can also be employed. This figure is intended less to propose a particular convention for character transmission from a telephone keyboard, than to demonstrate that the any of several schemas may be employed. In this schema, it is recognized that each numeric key from 2 to 9 on a telephone keyboard has 3 or 4 alphabetic letters associated with it. (7 has PQRS and 9 has WXYZ. All other keys 2 through 9 have three letters.) Each letter can be uniquely identified therefore, by its position relative to a given key (first, second, third or fourth position). Thus, by designating both a key and a key position, each number can be uniquely identified. Thus, two keystrokes are needed for each letter. For example, the name JOSHUA could be represented by the (position, key) pairs J=(1,5), O=(3,6), S=(4,7) H=(2,4), U=(2,8), A=(1,2). One can easily select a character code to signal the start and end of a character string, e.g., START = *1, END = *9. Again, while this precise schema could certainly be employed, so too could many others equally feasible schemas be easily employed by a skilled practitioner. For example, character codes are often entered into facsimile machines by placing a cursor at a particular position, and then toggling through a full alphanumeric alphabet, selecting a particular alphanumeric character to occupy the cursor position, and then moving to the next cursor position, i.e., to the next position in the alphanumeric string being entered, to repeat the toggling process. If these strings are stored in the emitting server's memory, then such processes, while cumbersome, need only be repeated once, rather than with each call, for information to be sent with every call.

At this point, we examine in more detail some significant voice processing variations. Recall that FIG. 2 illustrated memory recall and signalling from the primary user's telephone taking place via the manual entry of a RCL 2, which requires two distinct keystrokes by the primary user. Most of the subsequent discussion has assumed that memory recall is in fact effected by a small number of manual keystrokes. But the use of various voice processing and recognition techniques can obviate the need for any keystrokes whatsoever. Further, when used in conjunction with this invention, even the most rudimentary voice processing and recognition techniques can be quite usefully employed, as now illustrated by FIGS. 12 - 14.

For example, as shown in FIG. 12, the primary user might simply say "RECALL TWO" into a voice recognition device, which causes the contents of memory location two to be recalled and then dialed. In this example, the voice recognition device needs to be "trained" to recognize only about a dozen vocal signals (ten digits and a few function keys) from a single user (i.e., the primary phone user) to be fully effective, rather than a virtually unlimited number of vocal signals from multiple users that such a device may be called upon to recognize in other voice systems. Similarly, all of the telephone numbers to be retrieved are stored in the phone's relatively small memory via this system, limiting the required database search to the small quantity of telephone numbers in the phone's memory rather than to every phone number in the city, the country, or the world. Not only is the need for manual keystrokes eliminated, but the sophistication of the associated voice recognition and database retrieval system thus need not be nearly as great as that of other systems. The voice recognition device in this example, ideally, is a "voice keyboard" allowing voice intonation of the name of any alphanumeric or function key to have precisely the same effect as if the corresponding key were pressed on the manual keyboard. In this illustration, distinct vocal patterns are depicted as being stored in a voice keyboard. These patterns have been initially entered by the user at an earlier time in a "training" session which

essentially amounts to providing the telephone with a record of how the user intones the names of each of the keys. When the user now says "RECALL TWO" into a voice device on the telephone, these intonations are matched against the information stored in the voice keyboard, and commands are executed as if the user had punched in precisely the same commands at the manual keyboard.

FIG. 13 illustrates a random-access voice memory storage and recall scheme that obviates the need to be concerned about which memory location a particular phone number may be stored in. If the phone has a free-form voice memory and a means for matching free-form vocal patterns from a single user, the primary user might say "JOHN" or "NEXT APPOINTMENT" or "THE BOSS" just as John's telephone number or that of the next appointment or the boss is being transferred and stored into memory, and that vocalization could be stored in the free-form voice memory in association with that telephone number. When the primary user later wishes to return the call, a "CALL JOHN" or a "CALL NEXT APPOINTMENT" or a "CALL THE BOSS" could be matched with the stored vocal pattern, causing retrieval and signalling of the phone number associated with that pattern. Similarly to the discussion of FIG. 12, "CALL" would be matched against information in the voice keyboard and be recognized as a function key on that voice keyboard. "JOHN," "NEXT APPOINTMENT" or "THE BOSS" would be matched against information in the voice keyboard but would not be recognized as entries therein. So the system would next match these against information in the "free-form" voice memory, wherein it would indeed find a match. As a result, the associated phone number (in the illustration, the "next appointment" number, (914)827-5412) would be retrieved from memory and dialed. In addition to "trained" matching of precisely defined function and alphanumeric keys (facilitated by the "voice keyboard"), this requires direct matching of particular free-form vocal patterns uttered by the primary user, with free-form vocal patterns later uttered by that same user. In effect, the initial utterance comprises the "training" pattern and the subsequent utterances are then "matched" against the original. This is similarly a relatively rudimentary voice recognition task that narrows the scope of vocal utterances that need be matched, the range of users whose voices need be recognized, and the size of the database that need be searched for a match. In a similar type of random-access memory storage and recall scheme, some other item of enhanced user information (e.g., a simple character string) supplied by the caller or the call recipient can substitute for or supplement the role of this voice pattern.

Another variation might allow the caller to intone his or her telephone number (and perhaps simple alphanumerics) into the system, and to then have the system translate each vocalized digit into a machine-readable digit that can be used for subsequent redial from memory, in place of, say, transferring the number as DTMF digits. Depending on where in the system this "voice translator" is placed, it may, however, be necessary to recognize a limited number of voice signals from someone other than the primary phone user.

FIG. 14 illustrates this. Here, the primary user's server (e.g., answering machine, personal computer) has a "voice translator" device in addition to the usual server memory storing telephone numbers. The caller carefully enunciates "pound one three eight five zero five six five," and this is sent to the server over the connection. The voice translator processes this information and turns it into the machine-readable information #1 385-0565, which then causes storage of the phone number into the server memory in machine-readable form. Later, this can be further sent to the primary user and used as the basis for memory redial in the usual manner. While the "voice translator" is illustrated on the server, it can also be located on the caller's phone or on the primary user's phone, i.e., this translation can take place at any point in the process between the time the vocal signal leaves the caller's lips and the time the primary user is ready to recall and dial the number from memory. Similarly, with the translator on either of the caller's or the primary

user's telephones, the caller could be in direct communication with the primary user's phone, absent the intervening server (e.g., as in FIG. 7, as opposed to FIGS. 5 and 6).

Finally, if the translator is on the caller's phone, then in effect the translator need be nothing more than the "voice keyboard" described in connection with FIGS. 12 and 13. This is because the caller could train his or her keyboard to recognize his or her intonations of various keys, and then, when he or she later recites the same intonations, they could be matched and signals emitted from the telephone as if the caller had pressed the precisely corresponding keys on the manual keyboard. However, in this instance, the "voice keyboard" is introduced as a modification to the caller's equipment -- not the primary user's, wherein most of the other variations discussed require modifications only to the primary user's equipment. On the other hand, if the voice keyboard is on one of the primary user's devices, it will have to recognize vocal patterns from someone other than the primary user, and the "training" of this device becomes more difficult, i.e., this device must be more sophisticated insofar as its ability to respond to voice patterns of multiple individuals who may not be readily identifiable in advance.

Again, many of the voice processing techniques discussed here, by themselves, have precedent in existing art. But, their combination with the telephone number transferring capability of this invention is a significant variation of this invention, both simplifying the use of this invention and expanding the widespread utility of these voice processing techniques.

The various figures thus far illustrate the transmission and storage only of telephone numbers and associated character strings into the primary user's telephone for later redial. In all cases (excepting directory assistance, switch-based caller ID and call waiting), the secondary user (often the calling party) needs nothing more than an ordinary touch tone telephone in order to send telephone numbers effectively in conjunction with this invention, i.e., the calling phone needs no enhancements at all. Whether to obtain the upgraded equipment required to use this invention is solely the decision of the primary user. This, of course, greatly adds to the utility of the invention because it allows individual users of a switched telephone network to decide whether or not to use the invention as a matter of individual choice of consumer electronics, irrespective of what other users may or may not choose to do or what intelligence a phone company may or may not place into its network. But as earlier discussed in connection with FIG. 1, the range of such transmitted information identifying the caller and the purpose of the call can be expanded to encompass electronic mail and other forms of textual message, voice mail and other forms of audible sound associated with the message, facsimile information, pictures, and video information. This "customized caller information" variation has some important implications, and is now illustrated in detail by FIG. 15. Because the focus is now on the caller's phone (since we are looking at information designed to identify to caller to everyone else in the world), we now depict the caller rather than the primary user on the left side of the illustration.

First, a calling party who is conveying his or her phone number and related information does not necessarily have to manually punch in that information each time he or she makes a call. By including appropriate memories in the caller's phone, this information can be pre-programmed into the phone, i.e., the caller's phone will itself contain a broad range of callback and enhanced user information constituting the user-customized "identification" of the caller. Then, by issuing a simple command to activate a transfer (in FIG. 15, by pressing the INFOSEND -- send enhanced user information -- button or issuing a similar command at a voice keyboard), all of the customized caller information stored in the phone can be readily conveyed over the connection to the called party with minimal and perhaps no keystroke activity by the calling party. In this illustration, the caller -- obviously not concerned about his privacy vis-a-vis caller

identification -- is shamelessly sending a slew of information about himself, his business and his family over the connection, either to the primary user directly (as in FIG. 7) or to the primary user's server (as in FIGS. 5 and 6) for later retransmission to the primary user, as illustrated.

As noted earlier, many people do not realize that the memory for frequently-dialed numbers found in many telephones today can already be used to store and send as DTMF digits the caller's own phone number (or any other number the caller wishes to send), thus forming the rudiments of such a user-customized caller identification capability and greatly facilitating the use of this invention by callers. And if the only information being sent is a callback telephone number, then it is easy for the caller to maintain a few callback numbers (e.g., work, home, other frequented locations) in the frequently-dialed memory of the caller's telephone and transmit these to parties that he or she calls, so that on the caller's end, no modification whatsoever is required to many of the telephones already in use today. But, if the more varied enhanced user information forms of FIG. 15 are also included, then this does, for the first time, introduce some required modifications to the calling party's telephone. In particular, additional memories are needed beyond the frequently-dialed number memory, as are additional data communications capabilities to be discussed shortly in connection with FIG. 16.

Second, the enhanced user information variations of this invention allow a calling party to uniquely and individually tailor and customize the callback and related "caller ID" information that is used to identify himself or herself to whomever he or she calls, and it decentralizes the provision of such caller identification information out of the central office switch and into the intelligent end-user telephone equipment (just as this invention also allows a user to establish a paging service based solely on the user's own intelligent customer premise equipment by properly combining elements of FIGS. 5, 8 and 10 as discussed above). The caller's phone -- not the central office switch -- becomes the seat and source of information identifying the caller (just as the primary user's phone and server become the foundation of the primary user's own, customized, equipment-based paging and callback service). This is true even if the caller's telephone is a standard, unmodified touch tone phone and the caller manually (or via a voice keyboard) punches in, or maintains in the frequently-dialed number memory, a callback number and other information as described in connection with FIGS. 1 - 14. But it is even more apparent if the caller's telephone is enhanced with memories storing callback and customized caller identification information to be transferred automatically upon appropriate keyboard (or voice) command (e.g., INFOSEND), as illustrated by FIG. 15. In this enhancement, callback and other user-customized caller identification information is quite expressly stored in memories directly on the caller's telephone -- not in memories at the central office switch -- enabling enhanced, user-controlled, user-customized callback and caller identification functionality without the need for any supporting intelligence in the central office switch. In this way, each user of the phone system can establish his or her own desired level of caller identification privacy and determine how he or she will be identified to other users of the phone or switched telephone system. If the switched network supplies ISDN or broadband capability, this enhanced user information can all be transferred on a data channel, with the voice channel reserved to carry voice communication. For information of greater bandwidth, e.g., video, such higher-bandwidth connections may indeed be preferred, if not necessary. Just as with the primary user's telephone, use of this invention is facilitated if the caller's telephone also has a "voice keyboard."

Of course, the server, telephones and other devices belonging to a "primary" user would also have to be equipped with added enhanced user information memory to be able to receive and store enhanced user information from a caller whose phone is so-equipped. Because the memory used in a primary user's phone to store callback and other

identifying information as described by this invention can easily be the same memory commonly used to store frequently-called numbers in existing phones, the extension of such memory to house enhanced user information allows the primary user to store enhanced user information in conjunction with these frequently-called numbers as well.

Again, all of the discussion prior to FIG. 15 requires no modification whatsoever to the caller's ordinary touch tone telephone, but only to the primary user's server and telephone devices. The functionality illustrated in FIG. 15, however, does require the addition of appropriate memory components to the caller's telephone, and also the ability to establish appropriate data communications between the caller's telephone and the primary user's devices, to allow appropriate transfer of the contents of the caller's phone's memory to the primary user's device. The communications sequence for this parallels the one illustrated in FIG. 3.

Thus, in FIG. 16, which illustrates one of many possible approaches to such data communications, the first illustrated step is for the caller's phone to engage in a handshake sequence with the primary user's device to establish the protocols the two devices will use for transferring information. The second step is for the actual transmission of information to take place. Somewhere in this process, it is necessary to establish the type of information to be transferred. For example, the caller's phone may be capable of sending video data, but the primary user's device may not be capable of receiving such data, or vice versa, and this would have to be established. (Here, this is done in step 1. It could just as easily be done in Step 2, for example, by attempting to send some item of information, e.g., video, and then receiving a coded reply indicating that the device at the other end is not capable of receiving that type of information.) Upon completion of data transmission, the connection terminates, and the information now resides in place on the primary user's device. When the primary user next engages his or her server from a remote telephone, the information can be further downloaded to the phone and then utilized to initiate a callback based on the telephone numbering information stored in memory. Or, as alternatively illustrated, in the case of a phone-to-phone communication such as that shown in FIG. 7, the identification information so transferred would already reside on the primary user's phone or pager and be immediately available for subsequent memory redial.

Finally, while FIGS. 15 and 16 illustrate telephones capable of containing a broad range of enhanced user information, a telephone with the functional capability of receiving an emitted telephone number over the connection from a server and strong that number in memory for later redial can easily comprise a facsimile machine, a personal communications system, a personal computer, a personal digital assistant, or any other device which can be logically embedded into a single unit that includes this functional capability.

There are some other straightforward variations to this invention that add to its utility and user-friendliness. First, recall that FIG. 3 illustrated a memory management approach where numbers are simply loaded into the next available memory location of the primary user's telephone, wherein which the primary phone sends back a signal to indicate VACANT or FULL before a number is stored. This does not, however, preclude many other possible memory-loading schemas. For example, the primary user might tell a directory assistance operator (FIG. 4) or a secondary telephone user (FIG. 7) that he or she would like the number stored into memory location 11. This is trivially achieved by sending a MEM 11 field in front of the phone number and character information, rather than starting with MEM 1, seeing if it is FULL or VACANT, and then, if full, going on to the next iteration for MEM 2, and so on. In the case of a computer or smart television (FIG. 6), it is very straightforward for the computer phone management software to provide complete flexibility and control over how numbers are stored before they are transmitted to the primary user's phone memory. Indeed, a good software package should allow an individual primary user to define a personal profile

of the user's own preferences for how calls are to be ordered and prioritized prior to transmission to the primary user's phone. A knowledgeable secretary or computer operator familiar with the primary user's preferences, work priorities, etc., can further enhance this capability. Further, the organization of data on the computer server can be effectuated by means of signals transmitted from the phone user over the connection to the server. In the case of a phone message answering machine/caller ID box, a linear downloading into the next available memory location of the primary user's phone is most straightforward. However, simple embellishments can enable the primary user to control number emission by the server, for example, by signaling an answering machine to pause after each message, so that the user can punch in a number designating the memory location where that number is to be stored, rather than accept the default of "next empty memory location." Or the primary user can instruct the answering machine not to send a particular number at all, or to download the number the caller left without the caller ID number, etc. In effect, this too gives the user the ability to remotely organize data on the server before downloading to a phone. If the primary user has a random-access memory storage and retrieval capability such as that depicted and discussed in connection with FIG. 13, such ability to have the telephone control number emission from the server and to pause between messages would provide one means for storing free-form vocal patterns, or any other random access keys, in conjunction with the number just (or about to be) transmitted.

Also, the amount of information available on the primary user's phone display impacts ease of use, particularly when a large quantity of telephone numbers have been stored in the phone and the user does not remember which numbers are in which locations. Larger displays which show several consecutive locations can facilitate ease of use, as can a straightforward SCROLL function (forward and backward) that allows the user to quickly browse consecutive memory locations until the desired telephone number is displayed and positioned for redial. Similarly, the simple attachment of a printing device to the phone could allow the user to print out a hardcopy listing of the memory contents in a format that facilitates memory callback. If other sound, character, facsimile, pictorial or video information is included in the transfer as discussed in connection with FIGS. 15 and 16, it would of course be helpful to include a variety of output devices which "display" that information as well.

FIG. 17 depicts an "inverted use" variation of this system, wherein the phone has conference call capability based on numbers stored in its memory. In this variation, if the server is further provided with capability to control signalling by the telephone (hence the "inversion" of the more common situation where the telephone controls number emission by the server), then a server user can call a telephone, emit a series of telephone numbers from the server to the telephone in the usual manner for memory storage pending signalling, maintain the connection while directing the telephone to signal a conference call to one of these stored numbers, and continue to maintain the connection after the call to the first number signalled has been terminated, so that a second number, and subsequent numbers, can similarly be signalled throughout the maintenance of the original connection between the server and the telephone.

This could be useful, for example, for a person on business or vacation far from home who wishes to call multiple telephone numbers within his or her own home area code, but wishes to avoid multiple toll charges. A single toll call from a server to the person's home telephone is all that is needed. Once this single toll connection is established, the server emits all of the numbers to be called, to the telephone, in the usual manner. Then it commands the telephone to signal and patch in to the conference call multiple local telephone calls, in conference or in series. The total charge incurred is thus for a single, longer toll call and multiple local calls, rather than for multiple, shorter toll calls.

In FIG. 17, the server user, in New York City, sends four Los Angeles numbers to a conference call-equipped telephone in Los Angeles. (Note, in many other applications discussed, this user would be at the phone, not the server, and would be remotely commanding the server to emit numbers, rather than remotely commanding the phone to signal numbers -- hence "inversion.") Numbers are sent to the L.A. phone in the usual way, such that they can later be signalled. However, once the numbers are all downloaded and superfluous area codes stripped off, the server user emits a command over the connection to the phone asking the phone to signal each number, in sequence, while the conference call between the server and the phone is maintained. Each call is really a "dummy" three-way conference call involving the person at the server, the called party, and the "unmanned" conference phone. Charges for the origination of multiple toll calls can be significantly reduced in this way.

If both the server and the telephone have conference call capability, then in a multiparty conference call with, say, eight parties in New York City and four parties in Los Angeles, a server user in Los Angeles may find it less expensive to connect his or her server with his or her telephone station in New York, and to use the New York telephone as the base station for placing the eight New York calls, and the Los Angeles server for placing the four Los Angeles calls. Here, the total charge is then for one California-to-New York toll call, eight local calls within New York, and four local calls within Los Angeles. Ordinarily, the total charge would be for eight toll calls between California and New York, and four local Calls within Los Angeles.

Finally, it has been noted that as telephone, computing, information, video and other technologies continue to merge, it will be increasingly common for a "telephone" to be much more than a simple "plain old" telephone. Telephones with the functional capability of receiving an emitted telephone number over the connection from a server and strong that number in memory for later redial can easily comprise a facsimile machine, a personal communications system, a personal computer, a personal digital assistant, or any other device which can be logically embedded into a single unit that includes this functional capability. Thus, it is important to recognize that the telephone and/or various servers of this invention can comprise computer hardware and software enabling the telephone user to process and otherwise transform telephone numbers and enhanced user information residing in and passing through the system. For example, hardware and software in a server or telephone can be used to translate information stored in one language, into another language, thereby facilitating development of communications systems enabling even more universal communications among people. Indeed all manner of operation upon and manipulation of telephone numbers and related enhanced user information can occur with appropriate hardware and software on the servers and / or telephone.

Similarly, various databases linked to telephone numbers and the enhanced user information associated therewith enable integration of this system into various systems for personal organization and assistance. Such databases can comprise virtually any information for which linkage with a telephone number and the enhanced user information associated therewith is useful. For example, in one form of interaction between numbering information and a personal digital assistant, a user calendar could cross-reference the user's schedule with various phone numbers represented in the system, including appointments made to follow up on the call, scheduled times for callbacks, other related actions or plans, etc. In connection with some of the hardware and software just described, such a database can even control or initiate the callback of telephone numbers, or can alert the user that such a callback is necessary. Records can be maintained of calls received and the status and disposition of activities associated with these calls. And many other similar, database-linked applications are possible.

Also helpful is a clock providing a date and time which the telephone and the server devices can utilize to

"stamp" a telephone number with associated information regarding the date and time when that call was first received by the device.

Assuming an ordinary touch-tone telephone is available to and used by all users of the public switched telephone network (even if the user only has pulse service but can switch the phone to emit tones during a call), it is important to note that this invention is specified such that any individual "primary" user of a switched telephone system can make the individual consumer choice to use or not use this invention, irrespective of whether other users of the switched telephone system also use this invention. The only exceptions are: the directory assistance application, which would require systemic change in offices providing directory assistance; the traditional, central office-based caller ID and call waiting applications, which depend upon the degree to which caller ID and related functions have been implemented by the applicable phone companies and political jurisdictions; and the decentralized, caller-customized, enhanced user information applications as illustrated in connection with FIGS. 15 and 16, which require the addition of enhanced user information memory (e.g., voice, video, etc.) to a "secondary" caller's phone and an enhanced capability for that caller's phone to engage in data communications with the primary user's server, phone, or paging devices. In all other cases, the use of this invention is independent of any systemic change that may or may not be made to the phone system, and is also independent of the degree to which other users of the telephone system have themselves chosen to use this invention.

Finally, while it is preferred to use touch tone (DTMF) signals, those skilled in the art will appreciate that other forms of encoding including digital signals would be equally acceptable for use.

SYSTEM EMBODIMENTS AND VARIATIONS

Basic Structure

FIG. 18 is a block diagram depicting the primary embodiments and variations of this invention, capturing in more generic form the system characteristics of FIG. 1. Data moving into and out of various system components is depicted by way of connections to the sides of these components. Various command and control signals affecting the system operation and function are depicted by way of connections to the top of these components. In some instances, various memories are required for operation. In others, information can be passed through a device without memory storage and the memory is therefore optional. Thus, all memories but the telephone number memory in the telephone -- which is required -- are depicted with broken lines. While FIG. 18 and the accompanying discussion below is in reference to the overall system of server and telephone devices depicted by this figure, it is recognized that the server and telephone devices which separately comprise this system, and methods for using this overall system as well as these separate server and telephone devices, also comprise the overall invention described herein.

Part A) of this figure depicts the primary embodiment of the system comprising a server and a telephone connected with one another over a switched telephone network. The telephone number that is ultimately signalled by the telephone is first entered into and received by the server at an input device which also controls the operation of the server. Once in the server, this number may be emitted directly over the connection to the telephone (as shown, for example, in FIG. 7), or it may be stored in a memory within the server (e.g., FIGS. 5 and 6). In either case, when the server receives a command to emit that number, the number is then emitted in a coded format (DTMF, digital, or similar format) from the server to the telephone over the connection, received by the telephone, and then stored in a location in

the telephone number memory to be later recalled and signalled when the telephone receives a signalling command to signal that number. The telephone in this primary embodiment has a keyboard enabling data entry and controlling its operations, and an output device. The telephone number may optionally be output / displayed on the output device.

Variation B) of this figure depicts a primary variation wherein the movement of the telephone number through this system is supplemented and accompanied by the similar movement of a variety of associated enhanced user information. Added to the server is the capability to receive and emit both the telephone number and the enhanced user information associated with this phone number. The enhanced user information may be stored in an enhanced user information (E.U.I.) memory in the server, or it may be emitted directly over the connection to the telephone (for example, if the server user is reading in directly from a printed page and sending a facsimile in connection with an emitted number). In either event, the telephone receives this enhanced user information, and can either store it in an E.U.I. memory in the telephone for later output or can output it immediately to the output device (again, as for a direct facsimile output), upon receipt of an output command. The telephone number moves through the system and is ultimately signalled as in the primary embodiment, and may also be output to the output device. Absent this enhanced user information variation, this embodiment reduces to the primary embodiment A).

This variation B) depicts the connection between the server (e.g., answering machine or computer as in FIGS. 5 and 6) and the telephone, but does not depict either the connection between a caller and the server, or the device from which the caller is calling (aside from the type of two-device configuration depicted in FIG. 7). The caller's information enters the system through the server's input device, but the caller's device is not itself part of the system.

In contrast, variation C) of this figure depicts a second primary variation where the server itself is comprised of a plurality of at least two subservers connected to one another over the switched telephone network, receiving and relaying information from one subserver to the next in serial sequence -- a server "chain." The overall server, depicted within a large block containing all of the subservers, is identical in its overall function to the server in part B) above. It receives the number and associated enhanced user information from an input device, and irrespective of what happens inside the server (i.e., whether this information is stored in the telephone and E.U.I. memories or directly passed through without storage, whether it passes through one or multiple subservers, etc.), the server ultimately emits this information to the telephone over the connection to then be processed and ultimately signalled by the telephone in the usual manner. This variation C) is important for several reasons.

First, a particularly important variation is the one in which this plurality of subservers comprises exactly two subservers, i.e., the first subserver and the final subserver, without any intermediate subservers. In short, this figure encompasses the many varied situations discussed throughout in which the overall system including the telephone comprises three devices in total. This describes, for example, the arrangement of FIG. 5 wherein a caller places a call from a telephone (the first subserver), leaves the emitted number and associated enhanced user information (commonly, a voice message) on an answering machine (the final subserver), and wherein that information is in turn later emitted from the answering machine to the telephone over the connection, such that the number can ultimately be signalled from the telephone. Thus, in many instances, the first subserver will in fact coincide with the telephone of a caller, and the final subserver will coincide with the answering device of the intended recipient of the call. This final subserver is of course then connected to the call recipient's telephone. This figure also encompasses the structural elements, for example, of a caller placing a call to a paging service, entering the DTMF tones of a callback number which are received on the server of a paging service, and having the server then package that numbering information for further

relay to a pager which also has signalling capabilities based on the pager's phone number memory. Thus, in contrast with B), variation C) does depict the calling device itself (first subserver), as well as its connection into the remainder of the system. By including the calling device, this variation encompasses the form of user-customized caller identification wherein the caller might wish to store his or her own identifying information on the telephone, and in the process of making a call, perform a keystroke which automatically forwards this information to a receiving device belonging to the call recipient.

Second, when this plurality of subservers comprises more than two subservers (i.e., when it comprises one or more intermediate subservers) variation C) encompasses the situation where this information may in fact be serially transmitted from one subserver to the next over multiple subservers before it finally makes its way to the telephone for signalling, as is common in many modern networking environments. Information being relayed from one person to the next, and perhaps modified by each along the way, is supported by the structural relationships of part C), with appropriate further variations (e.g., software operating on that information) discussed below.

Finally, closely related, part C) accounts for systems of four or more devices generally. For example, it would encompass the situation where a caller places a call from a telephone (first subserver) to an office, and that information is entered into a computer (intermediate subserver) from a keyboard, such as the computer shown in FIG. 6. Then, a secretary might call the primary user's home answering machine (final subserver) and download all the accumulated calling information to that answering machine over a connection to the switched telephone network. Finally, the primary user calls the answering machine, further downloads all messages from the answering machine to the telephone, and uses the emitted numbers for signalling purposes.

Generally, the signalling of an emitted telephone number stored in the telephone number memory will take place at the telephone's connection to the switched telephone network. In a preferred variation, the server emission means comprises a DTMF signal generator, the emitted number is coded as DTMF digits, and the telephone reception means comprises a DTMF-responsive receiver. Coding in digital and similar formats is equally acceptable.

Numbering Variations

Within the context of the basic structural variations discussed above, a telephone number itself may or may not comprise an area code, international dialing codes, or supplemental "extension" digits. This system can operate on these various numbering variations to ensure that the number stored in the telephone's telephone number memory is appropriate for subsequent signalling, e.g., by stripping off an area code for a local call, prefixing a "1" for a long distance call, and appropriately processing numbers with international dialing codes. In the case of supplemental "extensions," (either a true extension or a second series of digits that are later dialed after some form of "access" number is first dialed and reached), the number may helpfully comprise a "pause" code adding a pause between the signalling of two adjacent digits, with the resumption of signalling taking place after detection of a resumption condition, for instance, after a certain time has elapsed, after the user has signalled a command to resume signalling, or in response to the detection of a tone or similar indicator from the device being signalled indicating its readiness to accept additional digits. A telephone number may also, in the future, be somewhat modified in format as changes are implemented in the NANP. All of these numbering variations are easily accommodated by this system.

Also, it may often be desirable to vocally utter a telephone number into the system and to have that number then translated into coded form somewhere within the system for ultimate use in memory-based recall and signalling, as

discussed in connection with FIG. 14. This is readily enabled by an appropriate voice translator on the phone or any of the servers.

Finally, in any situation where numbering information is transmitted from one device to the next, it is always helpful for the devices to exchange verification and confirmation signals to ensure that the number so transmitted has indeed been properly transmitted and received. This is readily achieved by sending appropriate verification and confirmation signals back and forth between two adjacently-connected devices.

Enhanced User Information, Peripheral Device, and Connection Variations

In the enhanced user information variations, the enhanced user information itself may comprise a broad range of information types, including but not limited to alphanumeric character data (e.g., a simple character string identifying a caller, electronic mail, text information), digital information data bits (i.e., any data represented as a stream of digital data "bits"), graphical data (e.g., charts, tables, figures, diagrams in an information system), facsimile image data (i.e., any printed information readily transferrable over a facsimile device), pictorial image data (i.e., any pictorial image that can be scanned into a device or produced within an information system and transmitted along the network to another device, which could include pictorial icons that a caller wishes to send in conjunction with his or her calls), audio data (e.g., an ordinary voice message such as is commonly left on an answering machine, a voice mail message, a sound clip, a tape recording, a musical performance, the sound track of video information), and video data (e.g., any moving video image, including a brief video clip or a full-length video program or event). It is also apparent that this enhanced user information can of course be represented in any spoken or written language. FIGS. 15 and 16 depict some of this enhanced user information and illustrate its transmission within the system.

The input device on the server can comprise a broad range of devices typically used for data entry of these various forms of enhanced user information. Of course, the input device can itself comprise a connection to the switched telephone network, which would be the case, for example, when a caller is leaving a message on an answering machine as in FIG. 5, or when a DTMF number is being provided to a paging service server within the three-device structural arrangement depicted by FIG. 5. The input device can comprise a keyboard such as the computer keyboard shown in FIG. 6, the telephone keyboard on the secondary user's phone in FIG. 7, or a computer mouse. Such a keyboard enables entry of both input data and functional commands. A "voice keyboard" of similar function to a manual keyboard may also be employed. The input device can comprise a caller ID receiver, a DTMF receiver, and a modem or any digital communications receiver (which will generally operate over a connection to the switched network). The input device can also comprise a facsimile scanner (such as is used to enter printed matter into a facsimile device for transmission), a pictorial image scanner (similar to a facsimile scanner but with enhanced capabilities to scan black and white or color picture images), an audio input device (e.g. a voice receiver that receives its voice signal over the network or a microphone receiving its signal from a user who is physically present at the same location), or a video input device (e.g., a video camera, a CAM recorder or similar device). Finally, it can comprise a computer data storage device (e.g., a "floppy" or compact optical disk drive, or a hard disk drive), an audio data storage device (e.g., a tape or other memory recording of audio information, the recorded soundtrack of video information), or a video data storage device (e.g., a video tape being played by a video cassette recorder, the video tracks of a compact optical disk drive, etc.).

Similarly, the output device on the telephone can comprise a broad array of devices responsive to this

enhanced user information. The output device can itself be a connection to the switched telephone network (for example, if it is desired to send any of the information residing on the telephone further along to yet another telephone on the network, or to modify some of the information on the phone and then send the modified information to a party at the associated emitted telephone number). Very commonly, the output device on the telephone will comprise a display window displaying telephone numbers and character data residing within the telephone. This device can comprise a video display terminal commonly used on a computer (to display all of the multiple forms of information -- video, text, graphics, etc. -- that can ordinarily be displayed on a computer display screen), a television monitor (to display that information which a television monitor can ordinarily display), a printer (for printing out phone numbers, alphanumeric text, graphics, and similar information), a facsimile image printer (for the output of facsimile information), a pictorial image printer (for pictorial image printout), an audio speaker (to play back audio data), a computer data storage device (e.g., a "floppy" disk, write-capable optical disk drive, or hard disk drive, enabling long term storage of the information residing in the phone), an audio data storage device (e.g., a tape or other memory recording audio information, including the recorded soundtrack of video information), or a video data storage device (e.g., a video cassette recorder recording video information onto a tape, a device writing video onto a magnetic disk drive or a write-capable optical disk drive, etc.)

In today's world of increasingly mobile communications, the server, telephone, and any and all subservers can obviously have not only a wired, but a wireless connection to the switched telephone network. Indeed, part of the utility of this invention is its ability to greatly simplify addressing for mobile communications during which one may not conveniently write down or signal a phone number. Also, as (narrowband and broadband) ISDN and even higher data rate "broadband" connections become more prevalent in switched telephone networks, the "connections" in this system can indeed be ISDN and broadband connections, not just "plain old" telephone connections. Indeed, these higher data rate connections enable voice and data communications to be carried on separate channels, and will be desirable if not necessary to support some of the more data-intensive forms of enhanced caller information transmission discussed above.

Command, Control and Operation

The command, control and operation of this system takes on a number of forms, and lends itself to a number of variations. The general functional control of the phone takes place via the keyboard, and that of the server via the input device. In FIG. 18, the keyboard and input devices are depicted as connecting not only to the sides of these devices to denote data input, but to the top of these devices, thus denoting command and control. However, it is also possible for the keyboard on the telephone to initiate and control actions by the server (preferably, after the right to control the server has been established, e.g., by supplying a correct password code), wherein a command entered at the telephone is sent back to the server over the connection and thus enables the telephone user to initiate and control the actions of the server. A common example of this, cited earlier in connection with FIG. 2, is where a user calls his or her home answering machine from a remote telephone, enters a password code gaining remote control over the device, and then proceeds to play back messages, record new messages, rewind the tape, and otherwise control the server as if he or she were physically present at the server and entering commands at the server's input device. So as to further reduce the amount of manual operation required to control these devices, the utilization of a voice keyboard (see, e.g., FIG. 12) on the telephone and/or a connection-responsive voice keyboard on the server responsive to utterances into the telephone

transmitted to the server over the connection, to control actions of the server and the telephone, is also a desirable feature. So too is a voice keyboard on the telephone that can also, via the connection, control the general functions of the server as just discussed. In the "inverted" use application discussed earlier and further discussed below, one inverts this system control and has the server input device controlling the system, including server actions, telephone actions, number emission, and, particularly, the signalling of numbers by the telephone.

Beyond general functional control, the control functions of particular interest in this system are emission of a telephone number and any associated enhanced user information from the server to the telephone (controlled by the emission and relay commands depicted on FIG. 18), and the signalling of a number stored in the telephone number memory (controlled by the similarly-depicted signalling command). While emission can obviously be controlled at the server's keyboard, it is again very desirable to control emission from the telephone, as in FIG. 5, since the use of this system will often involve the telephone user contacting his or her own "unmanned" server from a distance, in order to receive messages and telephone numbers. Thus, either a manual or voice keyboard on the telephone can generate the emission signals, sent from the telephone to the server over the connection, which then cause the server to emit a desired telephone number (and optionally, associated enhanced user information). Or, one can use a connection-responsive voice keyboard on the server wherein vocal utterances into the phone are transmitted back over the connection to cause the server to initiate number (and optional E.U.I.) emission. For signalling, either a manual or a voice keyboard on the telephone can be used recall a number from memory and to generate the signalling command. And, of course, the input device on the server, including a voice keyboard, can also be used to issue an emission command, and in the inverted use application, is used to issue a signalling command.

Also of interest are various ways of controlling the storage and retrieval of phone numbers and associated enhanced user information to and from various locations in the telephone number memory. A memory command, not explicitly depicted on FIG. 18, can of course be issued from either a manual or voice keyboard on the telephone. Such a command can also be issued by the server, as might be the case in FIG. 6, where the secretary has already determined how the numbers are to be organized when they are sent to the primary user's phone. Storage schemes are also easily based on the contents of the storage locations in the memory, for example, as in FIG. 3, where an emitted number is stored into the next available empty location in the phone number memory and later recalled by reference to that memory location. Finally, a more sophisticated memory management scheme is the random access scheme outlined in FIG. 13, where the user supplies a voice pattern (or other enhanced user information, e.g., a character string -- which can originate with the caller or the call recipient) to be stored in association with an emitted number, and the subsequent recall of this number for signalling is based on the user uttering a comparable voice pattern (or supplying comparable other enhanced user information) at a later time, without concern for the numbering or ordering of the various storage locations.

Functional Variations

Starting with these primary embodiments and variations, many further functional variations and combinations are possible. For example, when the server of either FIGS. 18 A) or B) is provided a directory telephone number memory, then the emission in coded form of a number from that memory in response to a directory lookup request corresponds with the directory assistance application of FIG. 4. The directory number "no longer in service" and "for further information, call . . ." applications described earlier are close variations of this basic directory assistance

application, based on deactivated and newly-activated telephone number memories, and a newly-activated telephone number memory, respectively. In these applications, what is most relevant is that this directory information be in the server to begin with, not how it got there originally. Nevertheless, the original "input" of directory information into a such a server might be, for example, via a computer disk drive or even a compact optical disk drive (which can contain enough directory information to cover an entire region of the country), while real-time modifications to this information could be input, for example, from modifications to customer account information made at a phone company's business office, via a switched connection to that office.

User-customized directory assistance is possible in the enhanced user information environment by associating a password with each number in these directory assistance applications, and allowing a caller to customize (e.g., add, modify, delete) the enhanced user information associated with that number, over the connection, by supplying the proper password proving that the number is in fact the caller's own number. In effect, this could enable user-customized, on-line, real-time, interactive, enhanced user information "yellow page" directories, and similar enhanced user information variations of telephone directories, as discussed earlier in connection with FIG. 4.

In an important functional variation of FIG. 18, the telephone and/or various servers (including subservers) of FIG. 18 can comprise computer hardware and software enabling the telephone user to process and otherwise transform telephone numbers and enhanced user information residing in and passing through the system, as discussed earlier. For example, hardware and software in a server or telephone can be used to translate information stored in one language, into another language, thereby facilitating development of communications systems enabling even more universal communication among people. Indeed all manner of operation upon and manipulation of telephone numbers and related enhanced user information can occur with appropriate computer hardware and software on the servers and / or telephone.

Similarly, various databases linked to telephone numbers and the enhanced user information associated therewith enable integration of this system into various systems for personal organization and assistance. Such databases can comprise virtually any information for which linkage with a telephone number and the enhanced user information associated therewith is useful. As discussed earlier, for example, in one form of interaction between numbering information and a personal digital assistant, a user calendar could cross-reference the user's schedule with various phone numbers represented in the system, including appointments made to follow up on the call, scheduled times for callbacks, other related actions or plans, etc. In connection with some of the hardware and software just described, such a database can even control or initiate the callback of telephone numbers, or can alert the user that such a callback is necessary. Records can be maintained of calls received and the status and disposition of activities associated with these calls. And many other similar, database-linked applications are possible.

On the telephone itself, another useful functional variation is that discussed in FIG. 8, wherein the telephone also comprises the combined functionality of more traditional pagers, answering machines and caller ID devices, and where the "caller identification" information that is output by the telephone to advise the recipient who is calling and what the call is about can include a broad range of enhanced user information that is customized by the caller on the caller's device, not by a phone company at a central office switch. This includes automated call pickup to automatically pickup an incoming call, establish the connection, possibly send out a message, tone or similar indicator for the caller to emit the telephone number and optional enhanced user information, store the emitted number and enhanced user information in the telephone number and E.U.I. memories, and terminate the connection, based on automated call

pickup conditions such as detection of an incoming call, completion of a specified number of rings or expiration of a specified time period without the user first picking up the telephone, an entry at the telephone keyboard, or the caller ID detection of a call fitting a particular user-defined profile. It also includes allowing the user to maintain the connection and enable manual phone pickup by the user for a brief period of time following automatic call pickup and output of the emitted number and optional enhanced user information by the output device and prior to termination of the connection, similarly to how one can pick up a telephone to connect with an incoming call to an answering machine, if desired, once the voice on the machine indicates who is in fact calling. Also useful is the telephone device generating a DTMF signal corresponding to a number in memory, so that the number can be signalled by holding this device in close proximity to a second telephone sounding a DTMF-responsive dial tone. Call waiting variations discussed in FIG. 9, with enhanced user information, can also display user-customized caller identification information, including an emitted telephone number and associated enhanced user information from the caller, allowing the phone user to determine whether or not to interrupt the current call and pickup the waiting call, and in any event, providing the phone user with the emitted number for later callback. With a caller ID signal being matched against a user-defined profile, the phone itself can also determine whether or not to interrupt the present call to receive the call waiting. Finally, as noted in the above discussion of output devices, the telephone itself can easily be provided means to emit phone numbers and enhanced user information in the telephone, over the connection, to yet another device.

On the servers (including subservers), it is a helpful variation to include means through which the server can be commanded to organize telephone numbers and other information on the server before emission to the telephone. Such means of organizing phone numbers may often comprise the computer hardware, software and databases discussed earlier. In FIG. 6, this was achieved by a secretary organizing numbers in the server through the input device. But, as discussed, user profiles with appropriate software can also be used to achieve this, as can signals generated by the telephone user and sent from the telephone to the server over the connection so as to command the server in its numbering organization. Call and enhanced user information selection, wherein a phone user can determine by a command to the server whether or not to transmit a particular phone number or item of enhanced user information from the server to the telephone is yet another way of enabling the phone user to organize the information on the server. It is also helpful for the server to be capable of initiating a call to the telephone when a call initiation condition has been recognized by the server, as discussed in connection with FIG. 10. Of course, the telephone's number would be entered to reside in a memory within the server so that the server-initiated call will be signalled to the correct number. This call initiation condition can be based on the quantity of calls received by the server, the receipt of a particular telephone call, or a user profile defining a more complex set of conditions under which the call should be initiated.

With this server call initiation variation, as discussed earlier, one can combine the functionality of FIGS. 5, 8 and 10 to reproduce the functionality of a paging system with added memory-based callback functionality, without the need for separate subscription to a paging service. Particularly, by setting the server to initiate a call to the primary user's telephone any time it receives a call (i.e., by basing the call initiation condition on the quantity of calls received by the server and by setting the quantity of calls needed for server initiation of a call to be equal to "one"), and by setting the primary user's phone to automatically pickup an incoming call immediately and store the emitted number straight into memory without any intervention by the user (i.e., where the automatic call pickup condition comprises detection of any incoming call), a user can establish his or her own paging service based completely on his or her own end- user equipment, and without any need whatsoever for a centralized paging service. The primary user's server acts just like a

paging service receiving and forwarding callback numbers for incoming calls as they are received, and the primary user's phone acts just like a pager, storing callback numbers straight into memory as soon as they are received. Unlike in a paging service, these numbers can also be later recalled and signalled from the telephone's memory. Again, this capability is based completely on the intelligence of the end user equipment, not the network. By employing varying combinations of the parameters defining the call initiation and the automatic call pickup conditions, the user can precisely configure and customize the user-defined paging service to his or her own individual tastes and priorities. And as noted, a related variation of this invention also includes the situation where a pager in a more traditional, centralized paging service is combined with a telephone allowing memory-based signalling of telephone numbers in the pager's telephone number memory.

Also helpful is a clock providing a date and time which the telephone and the server devices can utilize to "stamp" a telephone number with associated information regarding the date and time when that call was first received by the device.

Finally, as discussed in connection with FIG. 17, a useful variation involves "inverted use," wherein the telephone has conference call capability based on emitted numbers stored in its memory, and the server has the capability to control the telephone, particularly memory recall and signalling by the telephone. As discussed, this variation is even more flexible if both the server and the telephone have a conference call capability. These variations can be particularly useful in reducing toll charges when calling a series of out-of-area phone numbers.

While only certain preferred features of the invention have been illustrated and described, many modifications, changes and substitutions will occur to those skilled in the art. It is, therefore, to be understood that the appended claims are intended to cover all such modifications and changes as fall within the true spirit of the invention.

What is claimed is:

1. An end-user customizable, end-user telephone equipment-based paging and messaging system, the system comprising a server and a telephone-pager each having a connection to a switched telephone network;

the server comprising:

an input device;

first reception means responsive to the input device for receiving at least one received telephone number into the server as at least one resident telephone number;

means responsive to a call initiation condition, to initiate a telephone call from the server to the telephone-pager and initiate a connection therebetween over said switched telephone network;

an auxiliary memory storing an auxiliary telephone number which is the telephone number of the telephone-pager, which the server uses to initiate said telephone call to said telephone-pager; and

emission means responsive to an emission command for emitting in coded form, at least one of said resident telephone numbers, from the server to the telephone-pager over the connection therebetween, as at least one emitted telephone number; and

the telephone-pager comprising:

a telephone number memory comprising at least one storage location storing a telephone number;

means responsive to an automatic call pickup condition to automatically pickup an incoming call and establish the connection between the server and the telephone-pager;

second reception means responsive to receipt of said at least one emitted telephone number over said connection between the server and the telephone-pager for storing said at least one emitted number into the telephone number memory, as a stored telephone number;

call termination means to terminate said connection following said storing of the at least one emitted telephone number into the telephone number memory; and

an output device outputting at least one of the stored telephone numbers.

2. The system of claim 1, said telephone-pager further comprising retrieval and signalling means responsive to a retrieval and signalling command for retrieving an emitted number from its storage location in the telephone number memory and then calling the retrieved emitted number.

3. The system of claim 1, wherein said call initiation condition is generated by virtue of the server comparing at least one of said received telephone numbers to a plurality of telephone numbers pre-defined in a custom call initiation profile and matching said at least one received telephone number with one among said plurality of telephone numbers.

4. The system of claim 1, wherein said call initiation condition is generated whenever a call has been received by the server.

5. The system of claim 1, wherein said call initiation condition is generated by virtue of the server comparing the quantity of calls received by said server with a call quantity pre-defined in a custom call initiation profile.

6. The system of claim 1, wherein said call initiation condition is generated by virtue of the actual time reaching a pre-defined time in a custom call initiation profile.

7. The system of claim 1, the telephone-pager further comprising:

means to initiate a telephone call from said telephone-pager to said server and establish said connection therebetween over said switched telephone network;

means to generate said emission command from the telephone-pager to the server over said connection therebetween.

8. The system of claim 2, the telephone-pager further comprising:

means to initiate a telephone call from said telephone-pager to said server and establish said connection therebetween over said switched telephone network;

means to generate said emission command from the telephone-pager to the server over said connection therebetween.

9. A system for obtaining, storing and signalling telephone numbers, the system comprising a server and a telephone each having a connection to a switched telephone network;

the server comprising:

an input device;

first reception means responsive to the input device for receiving at least one received telephone number into the server as at least one resident telephone number;

emission means responsive to an emission command for emitting in coded form said at least one resident telephone number, from the server to the telephone over a connection therebetween, as at least one emitted telephone number;

the telephone comprising:

a voice keyboard responsive to a plurality of vocal utterances, each of said utterances corresponding and having an effect identical to the manual depression of one of a plurality of keys on a manual telephone keyboard;

a telephone number memory comprising a plurality of storage locations storing telephone numbers;

second reception means responsive to receipt of said at least one emitted telephone number over said connection between the server and the telephone for storing each emitted number into a storage location in the telephone number memory as a stored telephone number; and

retrieval and signalling means responsive to a retrieval and signalling command for retrieving an emitted number from its storage location in the telephone number memory and then calling said retrieved emitted number; wherein

said retrieval and signalling command is issued by vocal utterance into said voice keyboard.

10. A system for obtaining, storing and signalling telephone numbers, the system comprising a server and a telephone each having a connection to a switched telephone network and a connection to one another over the switched network:

the server comprising:

an input device;

first reception means responsive to the input device for receiving at least one received telephone number into the server as at least one resident telephone number;

emission means responsive to an emission command for emitting in coded form said at least one resident telephone number, from the server to the telephone over a connection therebetween, as at least one emitted telephone number;

the telephone comprising:

a voice keyboard responsive to a plurality of vocal utterances, each of said utterances corresponding and having an effect identical to the manual depression of one of a plurality of keys on a manual telephone keyboard;

a telephone number memory comprising a plurality of storage locations storing telephone numbers;

second reception means responsive to receipt of said at least one emitted telephone number over said connection between the server and the telephone for storing each emitted number into a storage location in the telephone number memory as a stored telephone number; and

retrieval and signalling means responsive to a retrieval and signalling command for retrieving an emitted number from its storage location in the telephone number memory and then calling said retrieved emitted number; wherein

said emission command is issued by vocal utterance into said voice keyboard.

11. A system for obtaining, storing and signalling telephone numbers, the system comprising a server and a telephone each having a connection to a switched telephone network:

the server comprising:

an input device;

first reception means responsive to the input device for receiving at least one received telephone number into the server as at least one resident telephone number;

emission means responsive to an emission command for emitting in coded form said at least one resident telephone number, from the server to the telephone over a connection therebetween, as at least one emitted telephone number;

the telephone comprising:

a voice pattern memory comprising a plurality of storage locations storing a plurality of voice patterns as stored voice patterns;

a voice input and pattern generating device generating a machine-readable representation of a vocal utterance into the device;

voice storage means responsive to the voice input and pattern generating device for storing said machine-readable representation of said vocal utterance into the voice pattern memory as one of said stored voice patterns;

means for detecting a match between a second vocal utterance into the voice input and pattern generating device and one of said stored voice patterns;

a telephone number memory comprising a plurality of storage locations storing telephone numbers;

second reception means responsive to receipt of said at least one emitted telephone number over said connection between the server and the telephone for storing each emitted number into a respective storage location in the telephone number memory as a stored telephone number in association with one of said stored voice patterns; and

retrieval and signalling means responsive to a retrieval and signalling command for retrieving an emitted number from its storage location in the telephone number memory and then calling said retrieved emitted number; wherein

the emitted number is selected and retrieved from one of said plurality of storage locations in said telephone number memory, and then called, based upon detecting a match between said second vocal utterance and the stored voice pattern associated with said retrieved emitted number.

12. A system for obtaining, storing and signalling telephone numbers, the system comprising a server and a telephone each having a connection to a switched telephone network:

the server comprising:

an input device;

first reception means responsive to the input device for receiving at least one received telephone number into the server as at least one resident telephone number; and

emission means responsive to an emission command for emitting in coded form said at least one resident telephone number, from the server to the telephone over a connection therebetween, as at least one emitted telephone number; and

the telephone comprising:

a telephone number memory comprising a plurality of storage locations storing telephone numbers;

second reception means responsive to receipt of said at least one emitted telephone number in coded form from the server to the telephone over a connection therebetween for storing each emitted number into a respective storage location in the telephone number memory;

retrieval and signalling means responsive to a retrieval and signalling command for retrieving an emitted number from its storage location in the telephone number memory and then calling said emitted number; and

conference call means responsive to the retrieval and signalling command, to signal and establish a conference call among several telephone addresses on the switched telephone network by retrieving and signalling telephone numbers stored in the telephone number memory;

wherein the retrieval and signalling command comprises an entry at the server input device emitted from the server to the telephone over the connection;

wherein the telephone, upon receipt of said retrieval and signalling command, initiates a first telephone call to a first telephone address by retrieving and calling an emitted telephone number stored in the telephone number memory while maintaining the connection between the telephone and server thereby establishing an initial conference call among the server, the telephone, and the said first telephone address, and similarly initiates additional telephone calls to additional telephone addresses by retrieving and calling additional emitted telephone numbers stored in the telephone number memory if the signalling command so indicates, while maintaining the initial conference call, thereby adding said additional telephone addresses to said initial conference call.

13. The system of claim 12, wherein the telephone maintains the connection between the telephone and the server after termination of the call between the telephone and the devices called using said emitted telephone numbers stored in the telephone number memory, enabling second and subsequent conference calls to be similarly placed if the signalling command so directs.

14. A telephone number and associated information server comprising:

a telephone number memory comprising a plurality of storage locations storing telephone numbers;

an information memory comprising a plurality of storage locations storing associated information linked to and associated with each of said telephone numbers stored in the telephone number memory;

first emission means responsive to an emission command for emitting in coded form at least one telephone number residing in the telephone number memory, from the server to a telephone over a connection therebetween, as at least one emitted telephone number;

second emission means responsive to said emission command for emitting associated information in the information memory and associated with said at least one emitted telephone number, in coded form, from the server to said telephone over the connection therebetween, as emitted associated information;

means responsive to a call received by the server from the telephone over the connection therebetween for collecting information indicative of a particular telephone number residing in said telephone number memory, desired by a caller placing said call;

means responsive to the information indicative of the particular telephone number desired by the caller for looking up said particular directory telephone number in said telephone number memory;

a password code memory comprising a plurality of storage locations storing personal identification password codes associated with each directory telephone number in said directory telephone number memory; and

means responsive to a second call from a second caller received by the server from the a second telephone over a second connection therebetween for operating upon said stored associated information;

wherein the emission command comprises successful completion of said looking up in said directory telephone number memory of said particular telephone number desired by the caller, the emitted telephone number is said directory telephone number yielded by said looking up, and the emitted associated information is said associated information associated with the emitted telephone number; and

wherein the second caller, by supplying information indicative of the second caller's own directory telephone number and correctly supplying the personal identification password code associated with the second caller's own directory telephone number, is thereby enabled to operate upon the associated information linked to and associated with the second caller's own directory telephone number.

15. The server of claim 14 in combination with a telephone, each having a physical connection to a switched telephone network, the telephone comprising:

a second telephone number memory comprising a plurality of storage locations storing telephone numbers;

reception means responsive to receipt of said at least one emitted telephone number in coded form from the server to the telephone over the connection therebetween for storing the at least one emitted number into a respective storage location in the second telephone number memory, as a second stored telephone number;

second reception means responsive to receipt of said emitted associated information associated with an emitted telephone number, emitted in coded form from the server to the telephone over the connection therebetween, for receiving into the telephone said emitted associated information associated with said at least one emitted telephone number; and

retrieval and signalling means responsive to a retrieval and signalling command for retrieving an

emitted number from its storage location in the second telephone number memory and then calling said retrieved emitted number.

16. An end-user customizable, end-user telephone equipment-based paging and messaging server comprising:

an input device;

first reception means responsive to the input device for receiving at least one received telephone number into the server as at least one resident telephone number;

means responsive to a call initiation condition to initiate a telephone call from the server to a telephone-pager and initiate a connection therebetween over a switched telephone network;

an auxiliary memory storing an auxiliary telephone number which is the telephone number of the telephone-pager, which the server uses to initiate said telephone call to said telephone-pager; and

emission means responsive to an emission command for emitting in coded form, at least one of said resident telephone numbers, from the server to the telephone-pager over the connection therebetween, as at least one emitted telephone number.

17. The system of claim 16, wherein said call initiation condition is generated by virtue of the server comparing at least one of said received telephone numbers to a plurality of telephone numbers pre-defined in a custom call initiation profile and matching said at least one received telephone number with one among said plurality of telephone numbers.

18. The system of claim 16, wherein said call initiation condition is generated whenever a call has been received by the server.

19. The system of claim 16, wherein said call initiation condition is generated by virtue of the server comparing the quantity of calls received by said server with a call quantity pre-defined in a custom call initiation profile.

20. The system of claim 16, wherein said call initiation condition is generated by virtue of the actual time reaching a pre-defined time in a custom call initiation profile.

21. An end-user customizable, end-user telephone equipment-based telephone-pager comprising:

a telephone number memory comprising at least one storage location storing one telephone number;

means responsive to an automatic call pickup condition to automatically pickup an incoming call over a switched telephone network and establish a connection between a calling server and the telephone-pager;

reception means responsive to receipt of at least one emitted telephone number over said connection between the server and the telephone-pager for storing said at least one emitted number into the telephone number memory, as a stored telephone number;

call termination means to terminate said connection following said storing of the at least one emitted telephone number into the telephone number memory; and

retrieval and signalling means responsive to a retrieval and signalling command for retrieving an emitted number from its storage location in the telephone number memory and then calling the retrieved emitted number.

22. The system of claim 21, the telephone-pager further comprising:

means to initiate a telephone call from said telephone-pager to said server and establish said connection therebetween over said switched telephone network;

means to generate said emission command from the telephone-pager to the server over said connection

therebetween.

23. A paging device comprising:

reception and storage means to receive at least one telephone number emitted in coded form from a paging network server and store said at least one telephone number into a storage location in a telephone number memory of said pager;

connection means enabling said paging device to connect to and place a call on a switched telephone network; and

retrieval and signalling means enabling said pager to retrieve a number stored in said telephone number memory and then call said telephone number using said connection means.

24. A method for receiving pages and messages through an end-user customizable, end-user telephone equipment-based paging and messaging system, the system comprising a server and a telephone-pager each having a connection to a switched telephone network, comprising the steps of receiving pages from the server to the telephone-pager by:

receiving at least one received telephone number from an input device into the server as at least one resident telephone number;

generating a call initiation condition;

initiating a telephone call from the server to the telephone-pager and initiating a connection therebetween over said switched telephone network in response to said call initiation condition, wherein the telephone number of the telephone-pager, which the server uses to initiate said telephone call to said telephone-pager, is stored in an auxiliary memory of the server;

the telephone-pager automatically picking up an incoming call and establishing a connection between the server and the telephone-pager, in response to an automatic call pickup condition;

emitting in coded form at least one of said resident telephone numbers, from the server to the telephone-pager over the connection therebetween, as at least one emitted telephone number;

receiving said at least one emitted telephone number over said connection between the server and the telephone-pager, into the telephone-pager;

storing each received emitted number into a respective storage location in a telephone number memory of the telephone-pager, as a stored telephone number;

terminating said connection following said storing of the at least one emitted telephone number into the telephone number memory of the telephone-pager; and

outputting at least one of said stored telephone numbers.

25. The method of claim 24, comprising the further steps of:

retrieving an emitted number from its storage location in the telephone number memory; and

calling the retrieved emitted number.

26. The method of claim 24, wherein said the step of generating said call initiation condition occurs by virtue of the server comparing at least one of said received telephone numbers to a plurality of telephone numbers pre-defined in a custom call initiation profile and matching said at least one received telephone number with one among said plurality of telephone numbers.

27. The method of claim 24, wherein said the step of generating said call initiation condition occurs whenever a call has been received by the server.

28. The method of claim 24, wherein said the step of generating said call initiation condition occurs by virtue of the server comparing the quantity of calls received by said server with a call quantity pre-defined in a custom call initiation profile.

29. The method of claim 24, wherein said the step of generating said call initiation condition occurs by virtue of the actual time reaching a pre-defined time in a custom call initiation profile.

30. The method of claim 24, comprising the further steps of retrieving messages from the server to the telephone by:

initiating a telephone call from said telephone-pager to said server and establishing a connection therebetween over said switched telephone network; and

generating said emission command from the telephone-pager to the server over said connection therebetween.

31. The method of claim 25, comprising the further steps of retrieving messages from the server to the telephone by:

initiating a telephone call from said telephone-pager to said server and establishing a connection therebetween over said switched telephone network; and

generating said emission command from the telephone-pager to the server over said connection therebetween.

32. A method for obtaining, storing and signalling telephone numbers through a system comprising a server and a telephone each having a connection to a switched telephone network, comprising the steps of:

receiving at least one received telephone number from an input device into the server as at least one resident telephone number;

emitting in coded form at least one of said resident telephone numbers, from the server to the telephone over a connection therebetween, as at least one emitted telephone number;

receiving said at least one emitted telephone number over said connection between the server and the telephone, into the telephone;

storing each emitted number into a respective storage location in a telephone number memory of the telephone, as a stored telephone number; and

retrieving an emitted number from its storage location in the telephone number memory and then calling the retrieved emitted number, in response to at least one vocal utterance into a voice keyboard, each said utterance corresponding with and having an effect identical to the manual depression of one of the plurality of keys on a keyboard of said telephone.

33. A method for obtaining, storing and signalling telephone numbers through a system comprising a server and a telephone each having a connection to a switched telephone network, comprising the steps of:

receiving at least one received telephone number from an input device into the server as at least one resident telephone number;

emitting in coded form at least one of said resident telephone numbers, from the server to the telephone over a connection therebetween, in response to at least one vocal utterance into a voice keyboard, each said utterance corresponding with and having an effect identical to the manual depression of one of the plurality of keys on a keyboard of said telephone, as at least one emitted telephone number;

receiving said at least one emitted telephone number over said connection between the server and the telephone, into the telephone;

storing each emitted number into a respective storage location in a telephone number memory of the telephone, as a stored telephone number; and

retrieving an emitted number from its storage location in the telephone number memory and then calling the retrieved emitted number.

34. A method for obtaining, storing and signalling telephone numbers through a system comprising a server and a telephone each having a connection to a switched telephone network, comprising the steps of:

storing a machine-readable representation of a vocal utterance into a storage location in a voice pattern memory as one of a plurality of stored voice patterns;

receiving at least one received telephone number from an input device into the server as at least one resident telephone number;

emitting in coded form at least one of said resident telephone numbers, from the server to the telephone over a connection therebetween, as at least one emitted telephone number;

receiving said at least one emitted telephone number over said connection between the server and the telephone, into the telephone;

storing each emitted number into a respective storage location in the telephone number memory as a stored telephone number in association with one of said plurality of stored voice patterns in a voice pattern memory of said telephone;

retrieving an emitted number from its storage location in the telephone number memory and then calling the retrieved emitted number, based upon detecting a match between said second vocal utterance and the stored voice pattern associated with said retrieved emitted number.

35. A method for obtaining, storing and signalling telephone numbers through a system comprising a server and a telephone each having a connection to a switched telephone network, comprising the steps of:

receiving at least one received telephone number from an input device into the server as at least one resident telephone number;

emitting in coded form at least one of said resident telephone numbers, from the server to the telephone over a connection therebetween, as at least one emitted telephone number;

storing each emitted number into a respective storage location in a telephone number memory as a stored telephone number;

retrieving an emitted number from its storage location in the telephone number memory and then calling the retrieved emitted number in response to a signalling command emitted from the server to the telephone over the connection, while maintaining the connection between the telephone and server, thereby establishing an initial conference call among the server, the telephone, and said first telephone address; and

similarly initiating additional telephone calls to additional telephone addresses by calling additional retrieved emitted telephone numbers stored in the telephone number memory if a further signalling command emitted from the server to the telephone over the connection so indicates, while maintaining the initial conference call, thereby adding said additional telephone addresses to said initial conference call.

36. The system of claim 35, comprising the further step of maintaining the connection between the telephone and the server after termination of the call between the telephone and the devices called using said emitted telephone numbers stored in the telephone number memory, enabling second and subsequent conference calls to be similarly placed if the signalling command so directs.

37. A method for obtaining, storing and signalling telephone numbers through a system comprising a server and a

telephone each having a connection to a switched telephone network, comprising the steps of:

collecting information indicative of a particular directory telephone number residing in a telephone number memory comprising a plurality of storage locations storing telephone numbers, desired by a caller placing a call to the server from a telephone over a connection therebetween;

looking up said particular desired directory telephone number in said telephone number memory;

emitting in coded form said directory telephone number, from the server to the telephone over a connection therebetween, as at least one emitted telephone number;

emitting associated information stored in an information memory and associated with said at least one emitted telephone number, in coded form, from the server to the telephone over the connection therebetween, as emitted associated information; and

operating upon said stored associated information in response to a second call from a second caller received by the server from the a second telephone over a second connection therebetween; wherein

the second caller, by supplying information indicative of the second caller's own directory telephone number and correctly supplying a personal identification password code associated with the second caller's own directory telephone number, is thereby enabled to operate upon the associated information linked to and associated with the second caller's own directory telephone number.

38. The method of claim 37, further comprising the steps of:

receiving said at least one emitted telephone number over said connection between the server and the telephone, into the telephone;

storing each emitted number into a respective storage location in a telephone number memory of the telephone, as a stored telephone number; and

receiving into the telephone said emitted associated information associated with said at least one emitted telephone number;

retrieving an emitted number from its storage location in the telephone number memory; and

calling said retrieved emitted number.

39. A method for sending pages from a server of an end-user customizable, end-user telephone equipment-based paging and messaging system, comprising the steps of:

receiving at least one received telephone number from an input device into the server as at least one resident telephone number;

generating a call initiation condition;

initiating a telephone call from the server to a telephone-pager and initiating a connection therebetween over a switched telephone network in response to said call initiation condition, wherein the telephone number of the telephone-pager, which the server uses to initiate said telephone call to said telephone-pager, is stored in an auxiliary memory of the server;

emitting in coded form at least one of said resident telephone numbers, from the server to the telephone-pager over the connection therebetween, as at least one emitted telephone number.

40. The method of claim 39, wherein said the step of generating said call initiation condition occurs by virtue of the server comparing at least one of said received telephone numbers to a plurality of telephone numbers pre-defined in a custom call initiation profile and matching said at least one received telephone number with one among said plurality of

telephone numbers.

41. The method of claim 39, wherein said the step of generating said call initiation condition occurs whenever a call has been received by the server.

42. The method of claim 39, wherein said the step of generating said call initiation condition occurs by virtue of the server comparing the quantity of calls received by said server with a call quantity pre-defined in a custom call initiation profile.

43. The method of claim 39, wherein said the step of generating said call initiation condition occurs by virtue of the actual time reaching a pre-defined time in a custom call initiation profile.

44. A method for receiving pages to a telephone pager of an end-user telephone equipment-based paging and messaging system, comprising the steps of:

the telephone-pager automatically picking up an incoming call and establishing a connection between a server and the telephone-pager, in response to an automatic call pickup condition;

receiving into the telephone-pager, at least one telephone number emitted by a server over a connection between the server and the telephone-pager using a switched telephone network;

storing each received emitted number into a respective storage location in a telephone number memory of the telephone-pager, as a stored telephone number;

terminating said connection following said storing of the at least one emitted telephone number into the telephone number memory of the telephone-pager;

retrieving an emitted number from its storage location in the telephone number memory; and

calling the retrieved emitted number.

45. The method of claim 44, comprising the further steps of retrieving messages from the server to the telephone by:

initiating a telephone call from said telephone-pager to said server and establishing a connection therebetween over said switched telephone network; and

generating said emission command from the telephone-pager to the server over said connection therebetween.

46. A method for using a paging device comprising the steps of:

receiving into the pager, at least one telephone number emitted in coded form from a paging network server;

storing said at least one telephone number into a storage location in a telephone number memory of said pager;

retrieving a number stored in said telephone number memory; and

calling said telephone number using connection means enabling said paging device to connect to and place a call on a switched telephone network.

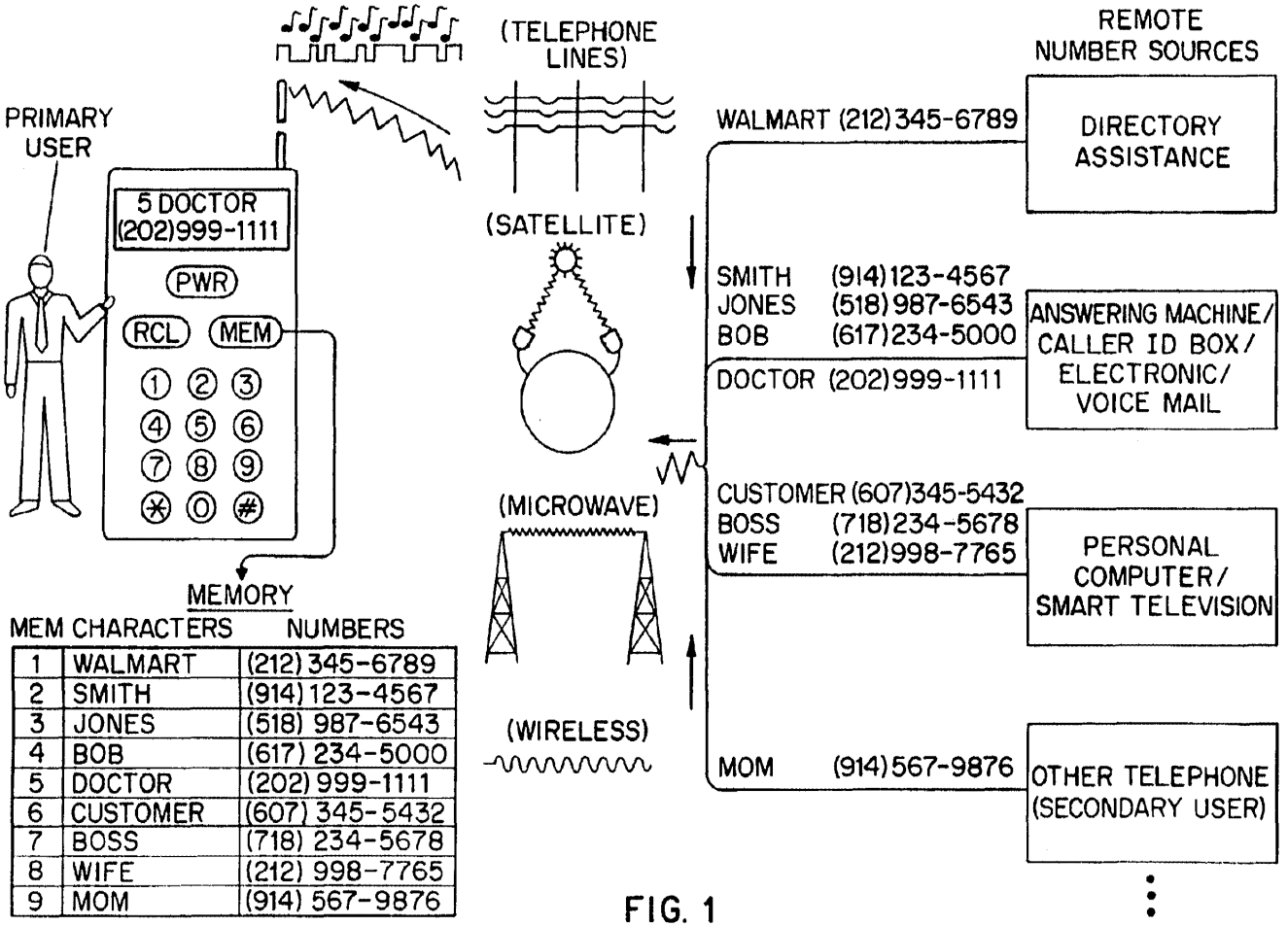

MEM	CHARACTERS	NUMBERS
1	WALMART	(212) 345-6789
2	SMITH	(914) 123-4567
3	JONES	(518) 987-6543
4	BOB	(617) 234-5000
5	DOCTOR	(202) 999-1111
6	CUSTOMER	(607) 345-5432
7	BOSS	(718) 234-5678
8	WIFE	(212) 998-7765
9	MOM	(914) 567-9876

FIG. 1

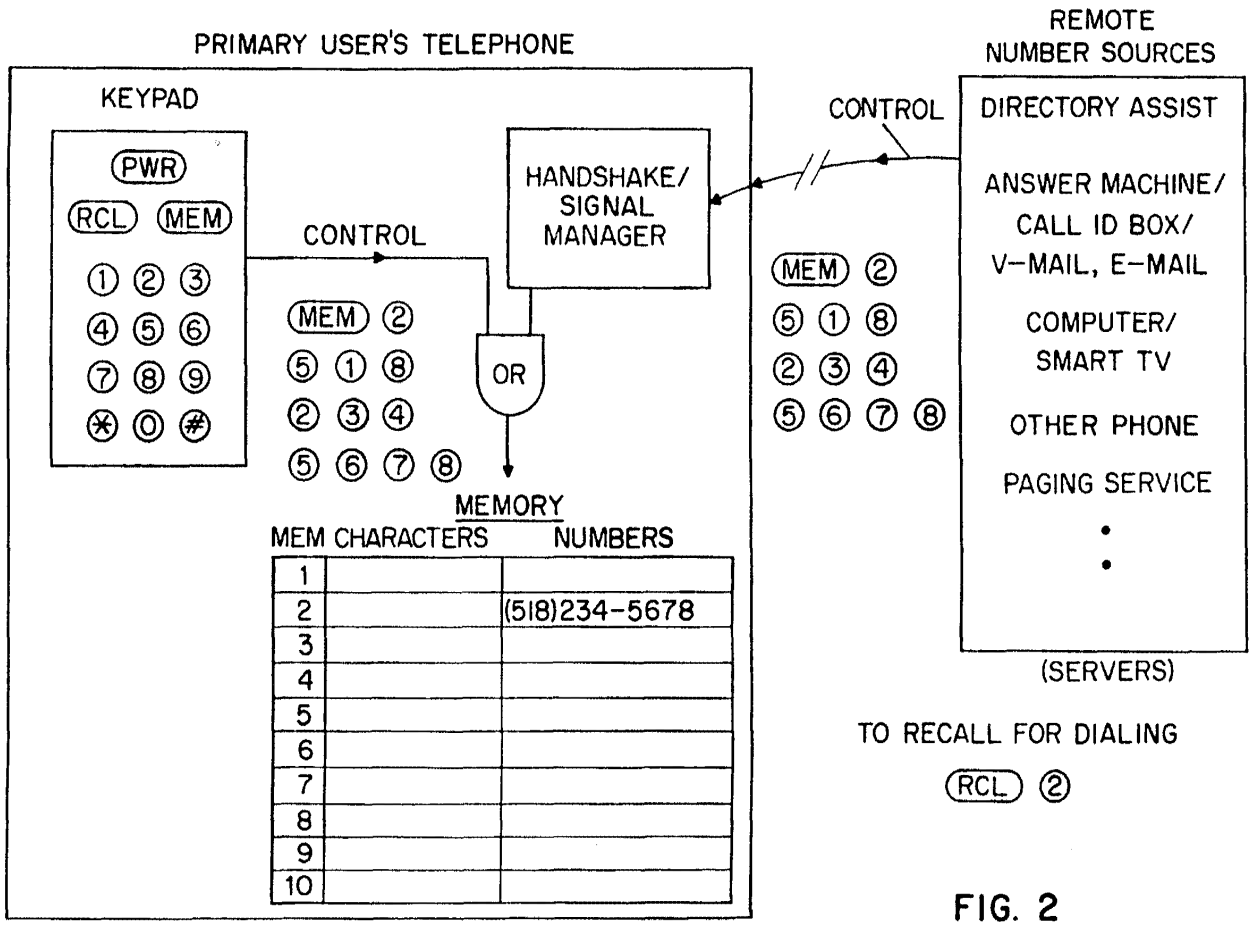

FIG. 2

Bright House Networks - Ex. 1008, Page 1656

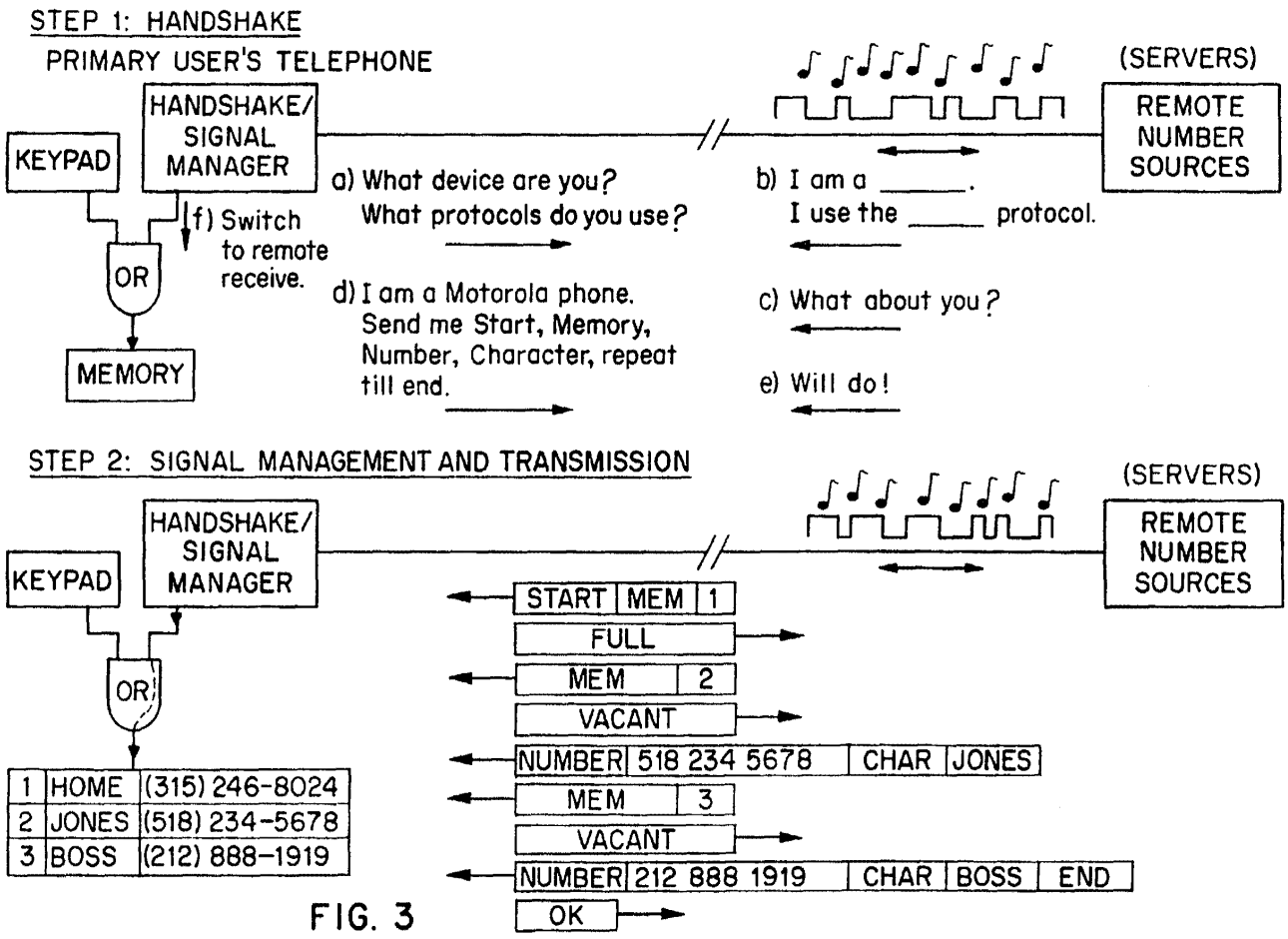
STEP 1: HANDSHAKE
PRIMARY USER'S TELEPHONE
HANDSHAKE/ SIGNAL MANAGER
KEYPAD
OR
MEMORY
f) Switch to remote receive.
(SERVERS)
REMOTE NUMBER SOURCES
a) What device are you? What protocols do you use?
b) I am a _____. I use the _____ protocol.
d) I am a Motorola phone. Send me Start, Memory, Number, Character, repeat till end.
c) What about you?
e) Will do!
STEP 2: SIGNAL MANAGEMENT AND TRANSMISSION
HANDSHAKE/ SIGNAL MANAGER
KEYPAD
OR
(SERVERS)
REMOTE NUMBER SOURCES
1 HOME (315) 246-8024
2 JONES (518) 234-5678
3 BOSS (212) 888-1919
START MEM 1
FULL
MEM 2
VACANT
NUMBER 518 234 5678 CHAR JONES
MEM 3
VACANT
NUMBER 212 888 1919 CHAR BOSS END
OK

FIG. 3

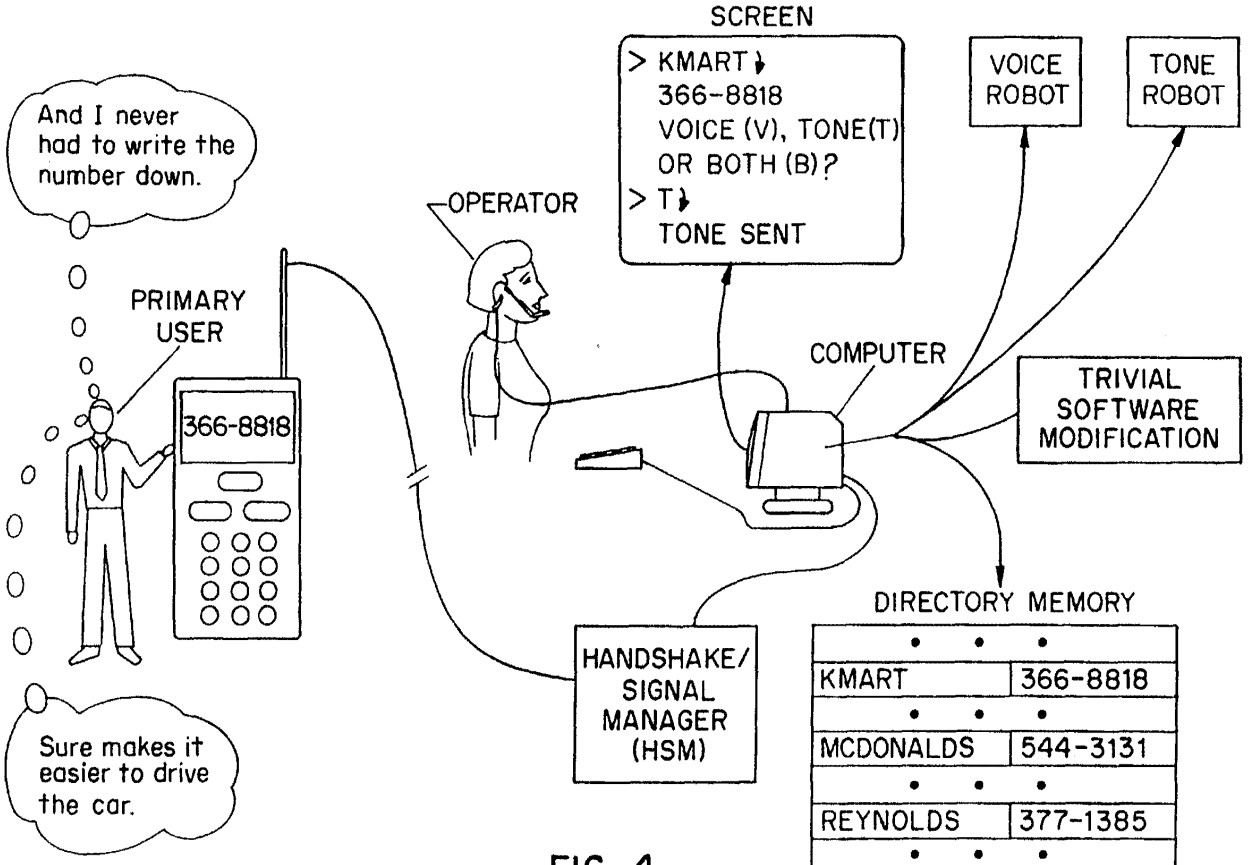
SCREEN
> KMART
366-8818
VOICE (V), TONE(T)
OR BOTH (B)?
> T
TONE SENT
VOICE ROBOT
TONE ROBOT
OPERATOR
And I never had to write the number down.
PRIMARY USER
366-8818
COMPUTER
TRIVIAL SOFTWARE MODIFICATION
HANDSHAKE/ SIGNAL MANAGER (HSM)
DIRECTORY MEMORY
KMART 366-8818
MCDONALDS 544-3131
REYNOLDS 377-1385
Sure makes it easier to drive the car.

FIG. 4

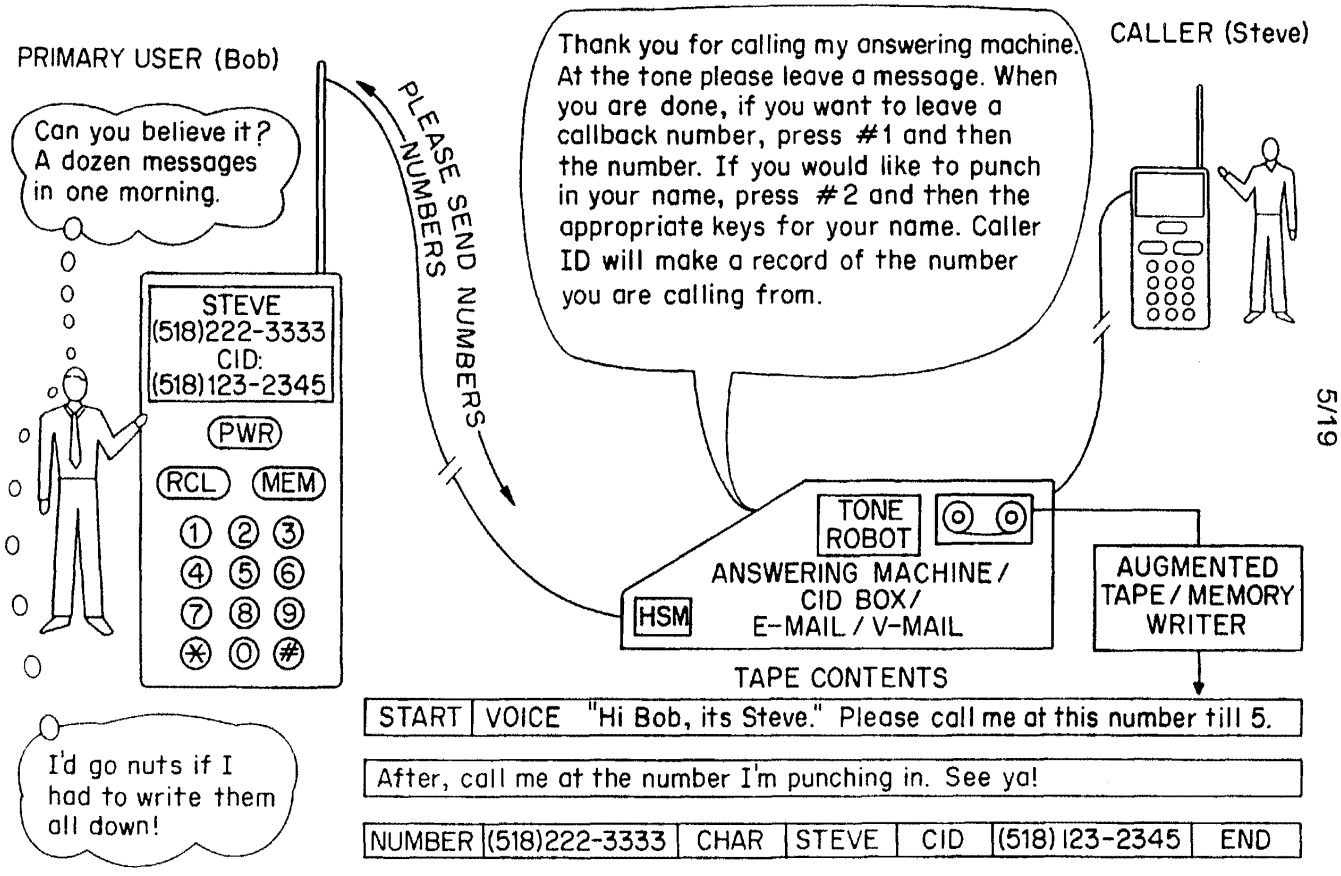
PRIMARY USER (Bob)
Can you believe it? A dozen messages in one morning.
STEVE
(518)222-3333
CID:
(518)123-2345
PWR
RCL
MEM
1 2 3
4 5 6
7 8 9
* 0 #
I'd go nuts if I had to write them all down!
PLEASE SEND NUMBERS
Thank you for calling my answering machine. At the tone please leave a message. When you are done, if you want to leave a callback number, press #1 and then the number. If you would like to punch in your name, press #2 and then the appropriate keys for your name. Caller ID will make a record of the number you are calling from.
CALLER (Steve)
TONE ROBOT
HSM
ANSWERING MACHINE / CID BOX / E-MAIL / V-MAIL
AUGMENTED TAPE / MEMORY WRITER
TAPE CONTENTS
START | VOICE "Hi Bob, its Steve." Please call me at this number till 5.
After, call me at the number I'm punching in. See ya!
NUMBER | (518)222-3333 | CHAR | STEVE | CID | (518)123-2345 | END
START | NEXT MESSAGE | END • • •

FIG. 5

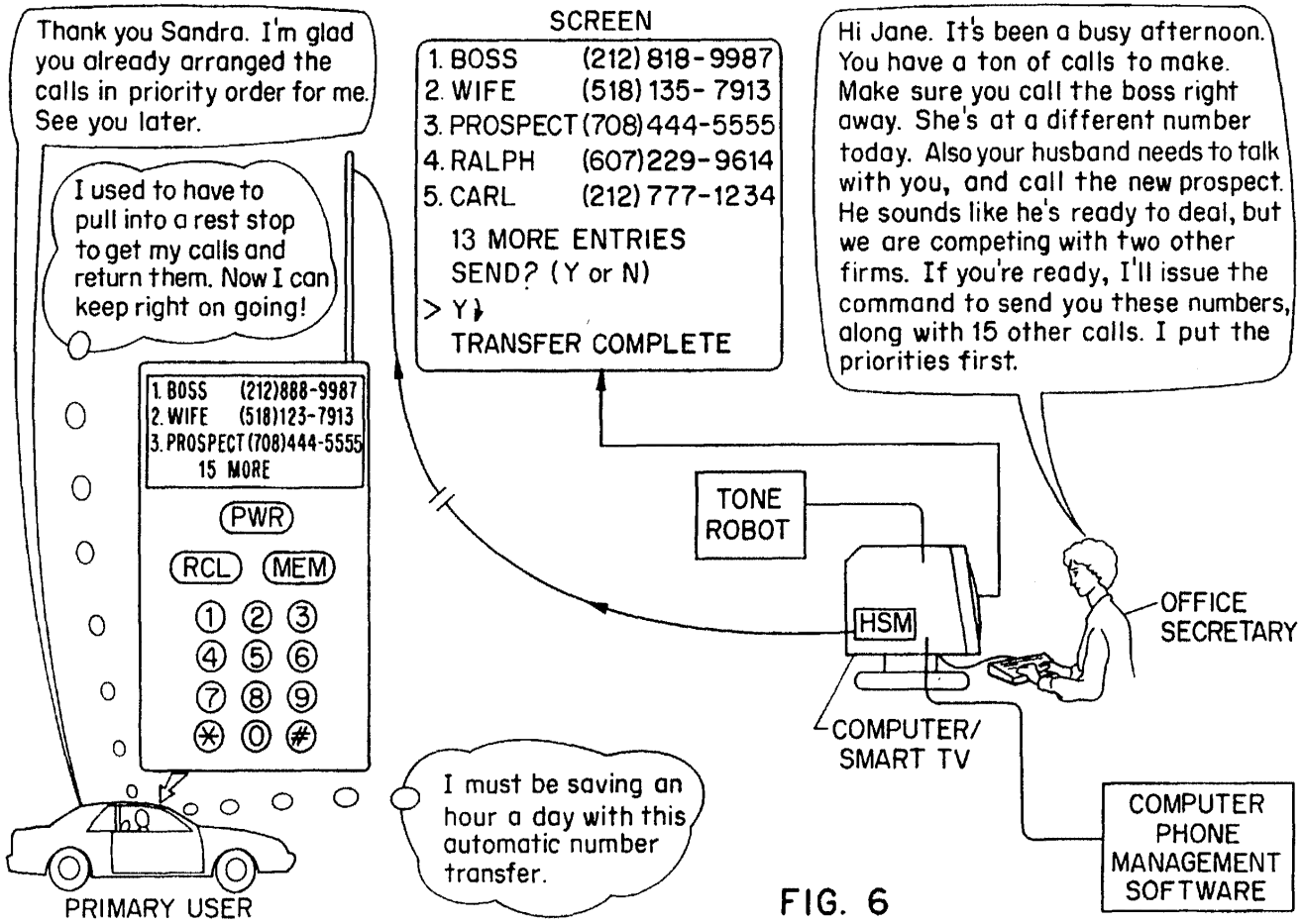
Thank you Sandra. I'm glad you already arranged the calls in priority order for me. See you later.
I used to have to pull into a rest stop to get my calls and return them. Now I can keep right on going!
1. BOSS (212)888-9987
2. WIFE (518)123-7913
3. PROSPECT (708)444-5555
15 MORE
PWR
RCL
MEM
1 2 3
4 5 6
7 8 9
* 0 #
PRIMARY USER
SCREEN
1. BOSS (212) 818-9987
2. WIFE (518) 135-7913
3. PROSPECT (708)444-5555
4. RALPH (607)229-9614
5. CARL (212) 777-1234
13 MORE ENTRIES
SEND? (Y or N)
> Y
TRANSFER COMPLETE
Hi Jane. It's been a busy afternoon. You have a ton of calls to make. Make sure you call the boss right away. She's at a different number today. Also your husband needs to talk with you, and call the new prospect. He sounds like he's ready to deal, but we are competing with two other firms. If you're ready, I'll issue the command to send you these numbers, along with 15 other calls. I put the priorities first.
TONE ROBOT
HSM
OFFICE SECRETARY
COMPUTER/ SMART TV
COMPUTER PHONE MANAGEMENT SOFTWARE
I must be saving an hour a day with this automatic number transfer.

FIG. 6

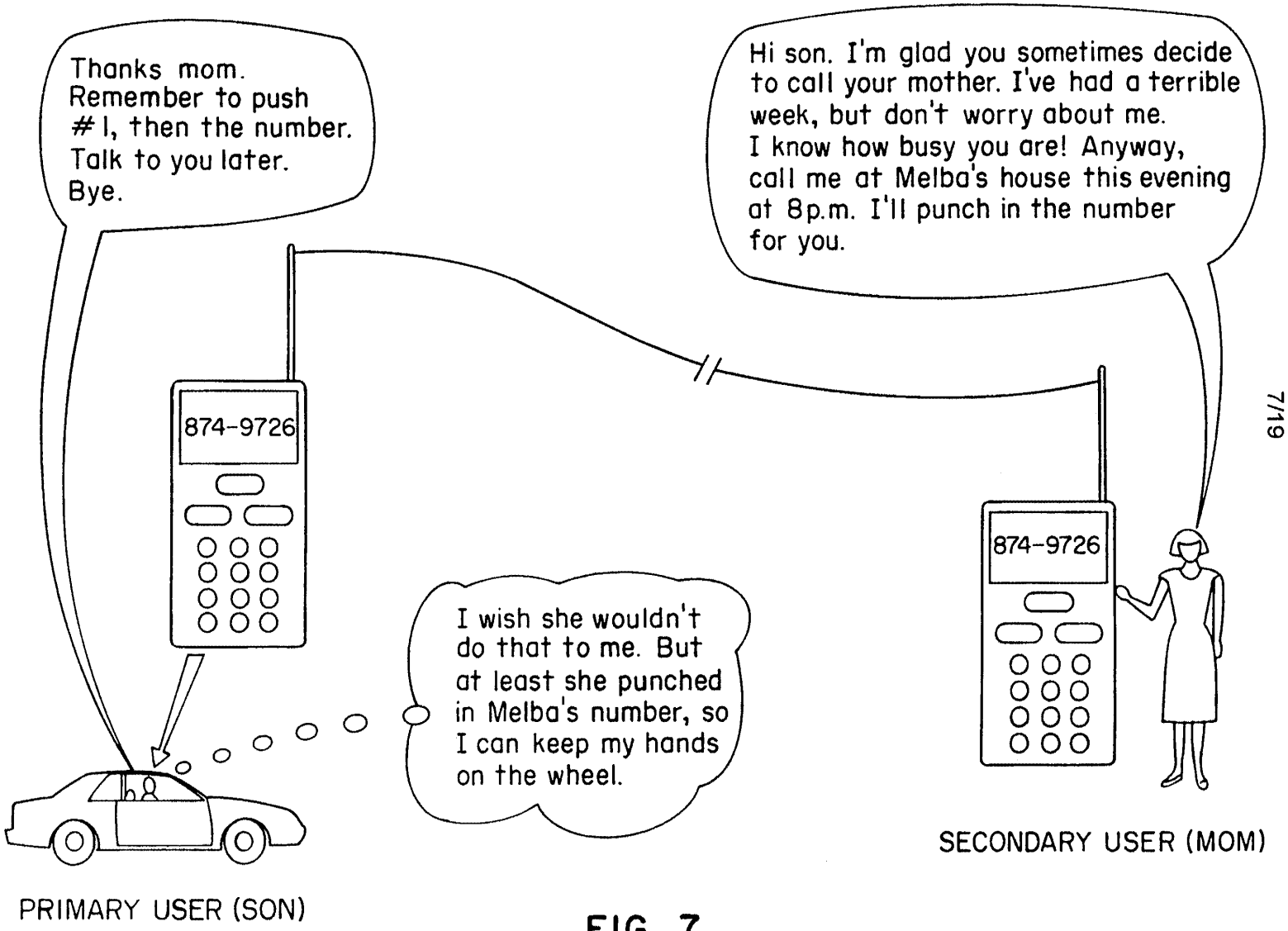
Thanks mom.
Remember to push
1, then the number.
Talk to you later.
Bye.
874-9726
PRIMARY USER (SON)
I wish she wouldn't
do that to me. But
at least she punched
in Melba's number, so
I can keep my hands
on the wheel.
Hi son. I'm glad you sometimes decide
to call your mother. I've had a terrible
week, but don't worry about me.
I know how busy you are! Anyway,
call me at Melba's house this evening
at 8p.m. I'll punch in the number
for you.
874-9726
SECONDARY USER (MOM)

FIG. 7

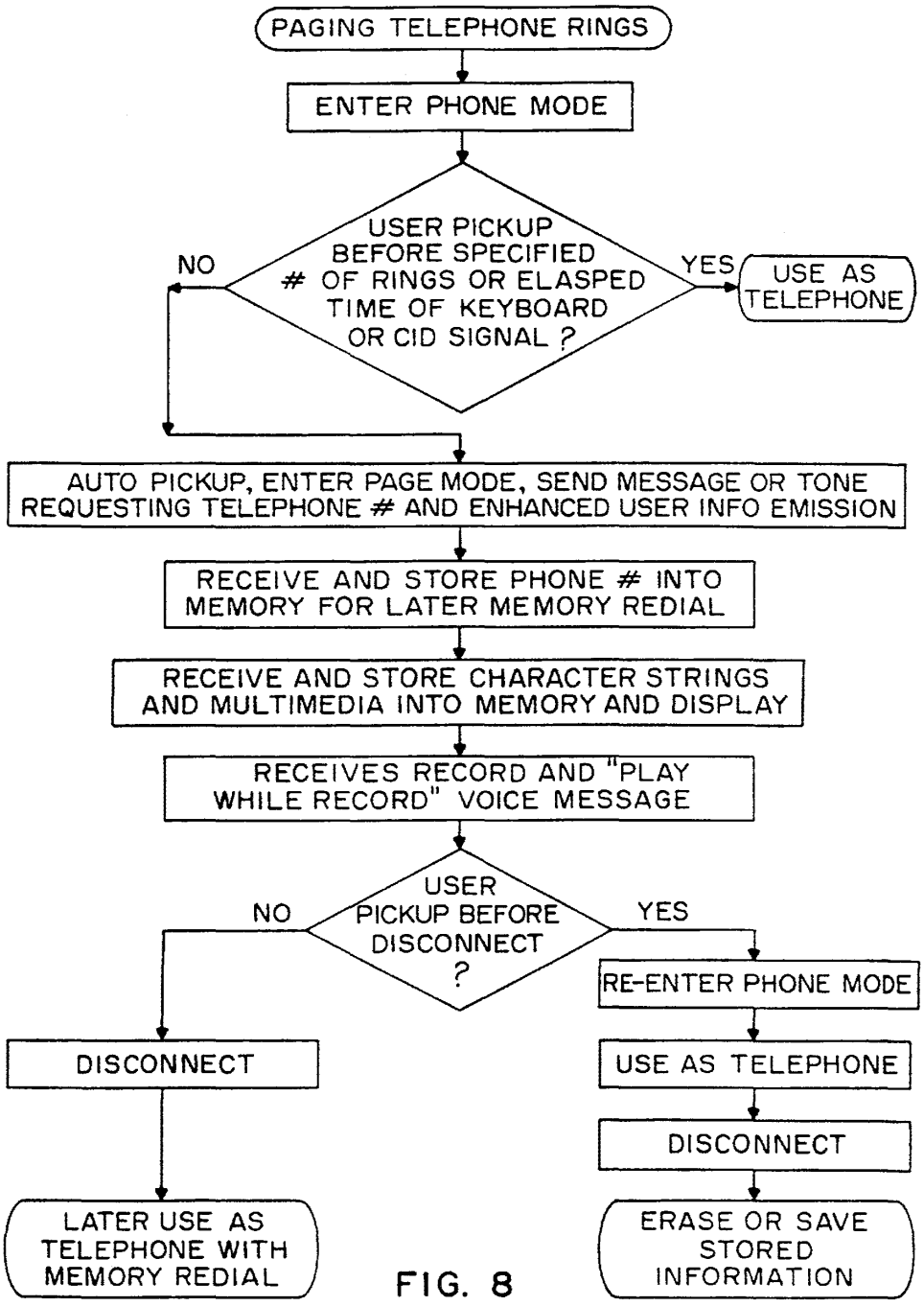
PAGING TELEPHONE RINGS
ENTER PHONE MODE
USER PICKUP BEFORE SPECIFIED # OF RINGS OR ELASPED TIME OF KEYBOARD OR CID SIGNAL ?
NO
YES
USE AS TELEPHONE
AUTO PICKUP, ENTER PAGE MODE, SEND MESSAGE OR TONE REQUESTING TELEPHONE # AND ENHANCED USER INFO EMISSION
RECEIVE AND STORE PHONE # INTO MEMORY FOR LATER MEMORY REDIAL
RECEIVE AND STORE CHARACTER STRINGS AND MULTIMEDIA INTO MEMORY AND DISPLAY
RECEIVES RECORD AND "PLAY WHILE RECORD" VOICE MESSAGE
USER PICKUP BEFORE DISCONNECT ?
NO
YES
DISCONNECT
RE-ENTER PHONE MODE
USE AS TELEPHONE
DISCONNECT
LATER USE AS TELEPHONE WITH MEMORY REDIAL
ERASE OR SAVE STORED INFORMATION

FIG. 8

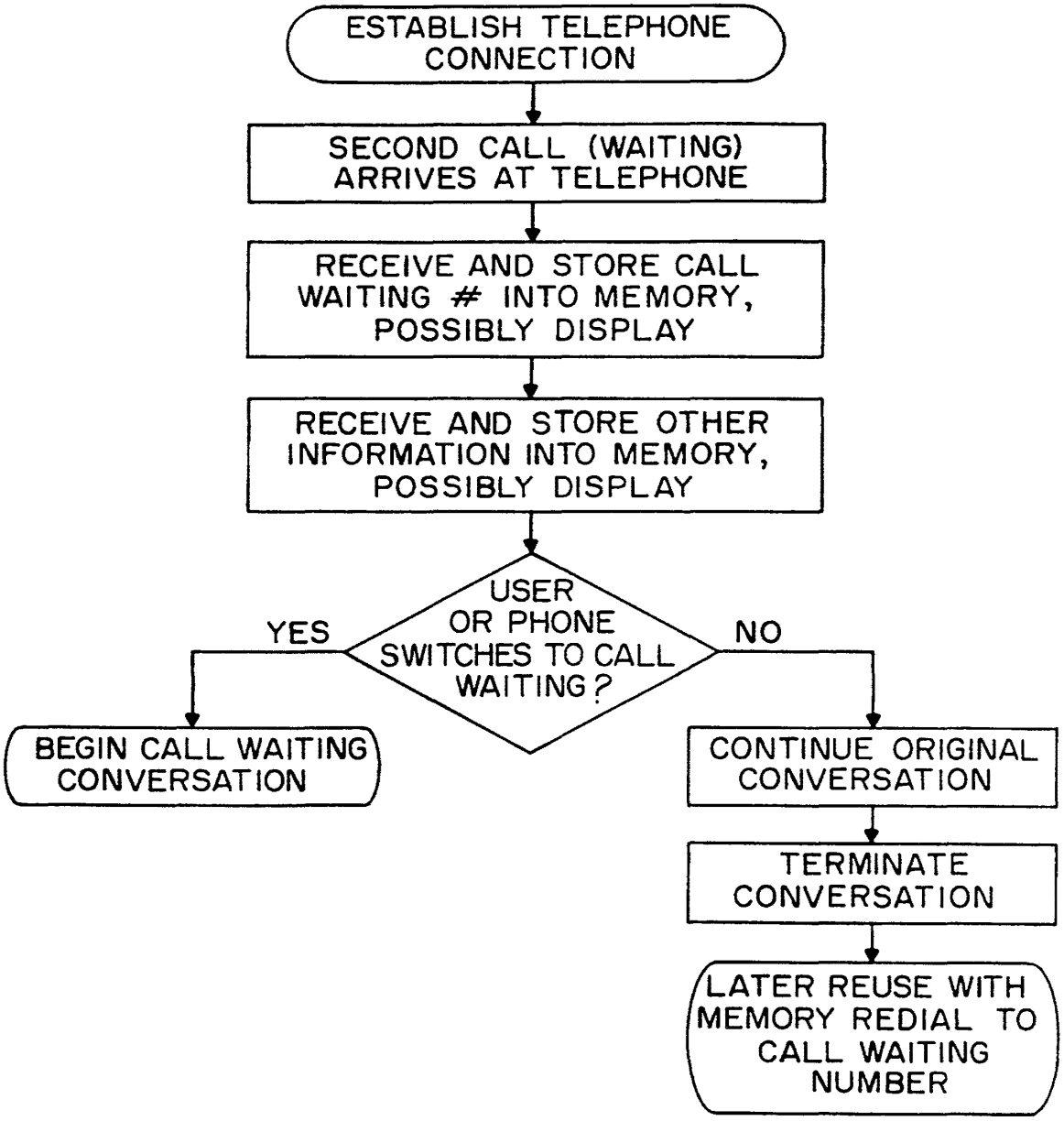
ESTABLISH TELEPHONE CONNECTION
SECOND CALL (WAITING) ARRIVES AT TELEPHONE
RECEIVE AND STORE CALL WAITING # INTO MEMORY, POSSIBLY DISPLAY
RECEIVE AND STORE OTHER INFORMATION INTO MEMORY, POSSIBLY DISPLAY
USER OR PHONE SWITCHES TO CALL WAITING?
YES
NO
BEGIN CALL WAITING CONVERSATION
CONTINUE ORIGINAL CONVERSATION
TERMINATE CONVERSATION
LATER REUSE WITH MEMORY REDIAL TO CALL WAITING NUMBER

FIG. 9

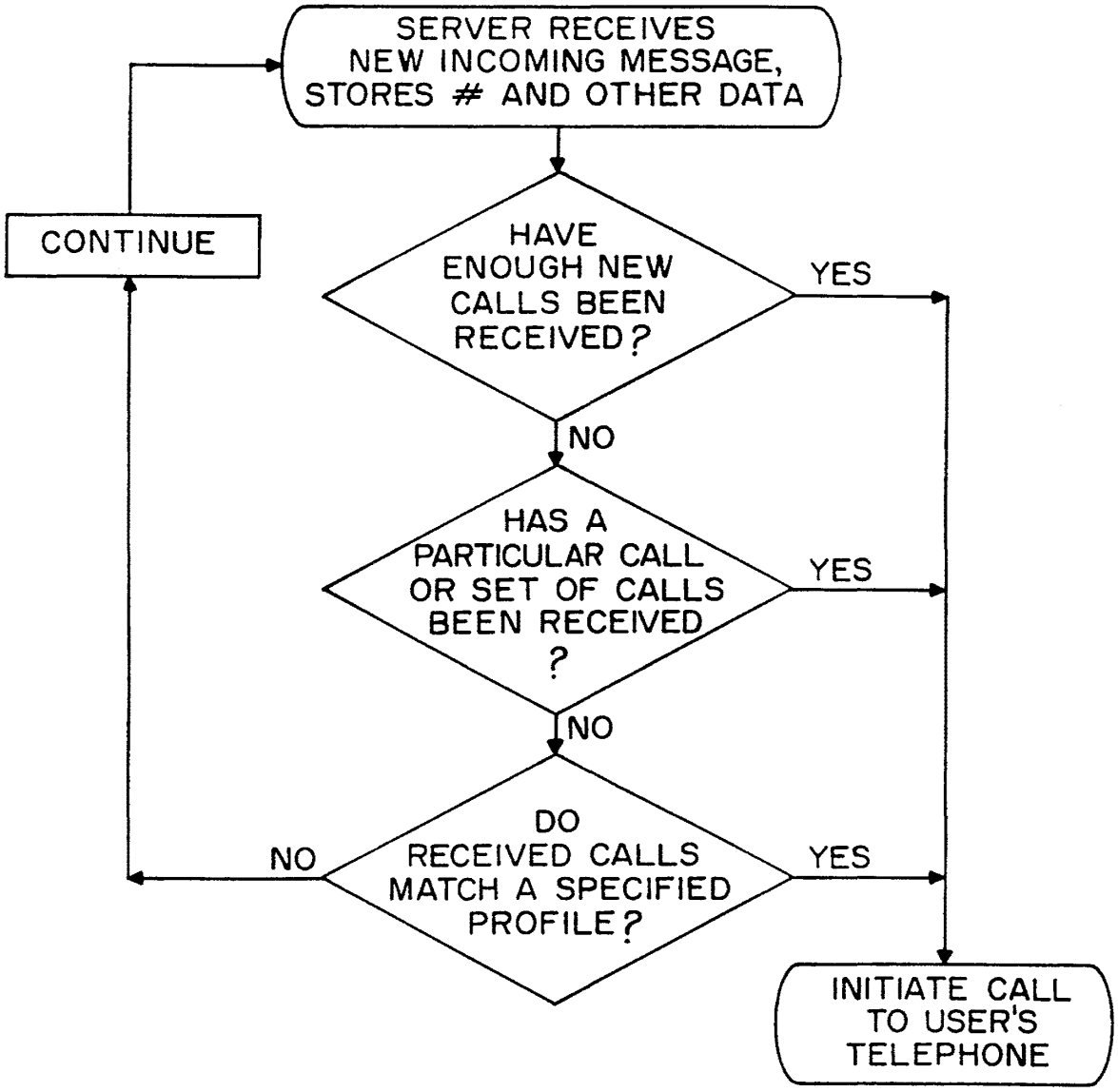
SERVER RECEIVES NEW INCOMING MESSAGE, STORES # AND OTHER DATA
HAVE ENOUGH NEW CALLS BEEN RECEIVED?
YES
NO
CONTINUE
HAS A PARTICULAR CALL OR SET OF CALLS BEEN RECEIVED ?
YES
NO
DO RECEIVED CALLS MATCH A SPECIFIED PROFILE?
NO
YES
INITIATE CALL TO USER'S TELEPHONE

FIG. 10

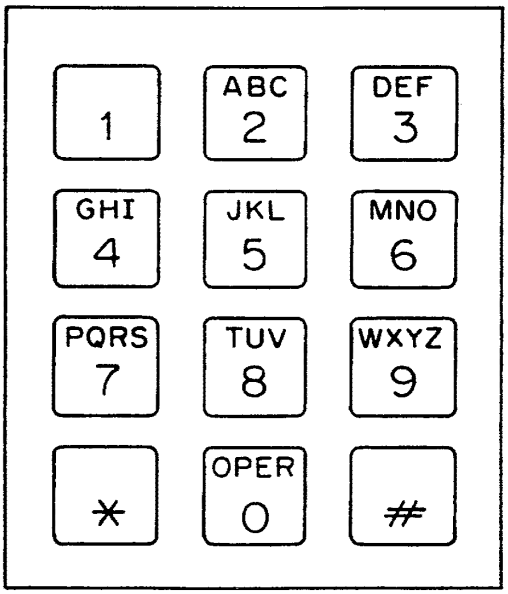

*1 = START STRING

*9 = END STRING

(FOR EXAMPLE)

STANDARD KEYBOARD POSITION, KEY

A = (1, 2)	N = (2, 6)
B = (2, 2)	O = (3, 6)
C = (3, 2)	P = (1, 7)
D = (1, 3)	Q = (2, 7)
E = (2, 3)	R = (3, 7)
F = (3, 3)	S = (4, 7)
G = (1, 4)	T = (1, 8)
H = (2, 4)	U = (2, 8)
I = (3, 4)	V = (3, 8)
J = (1, 5)	W = (1, 9)
K = (2, 5)	X = (2, 9)
L = (3, 5)	Y = (3, 9)
M = (1, 6)	Z = (4, 9)

KEYSTROKE SEQUENCE FOR JOSHUA:

*1 (START)	15 (J)	36 (O)	47 (S)
24 (H)	28 (U)	12 (A)	*9 (END)

FIG. 11

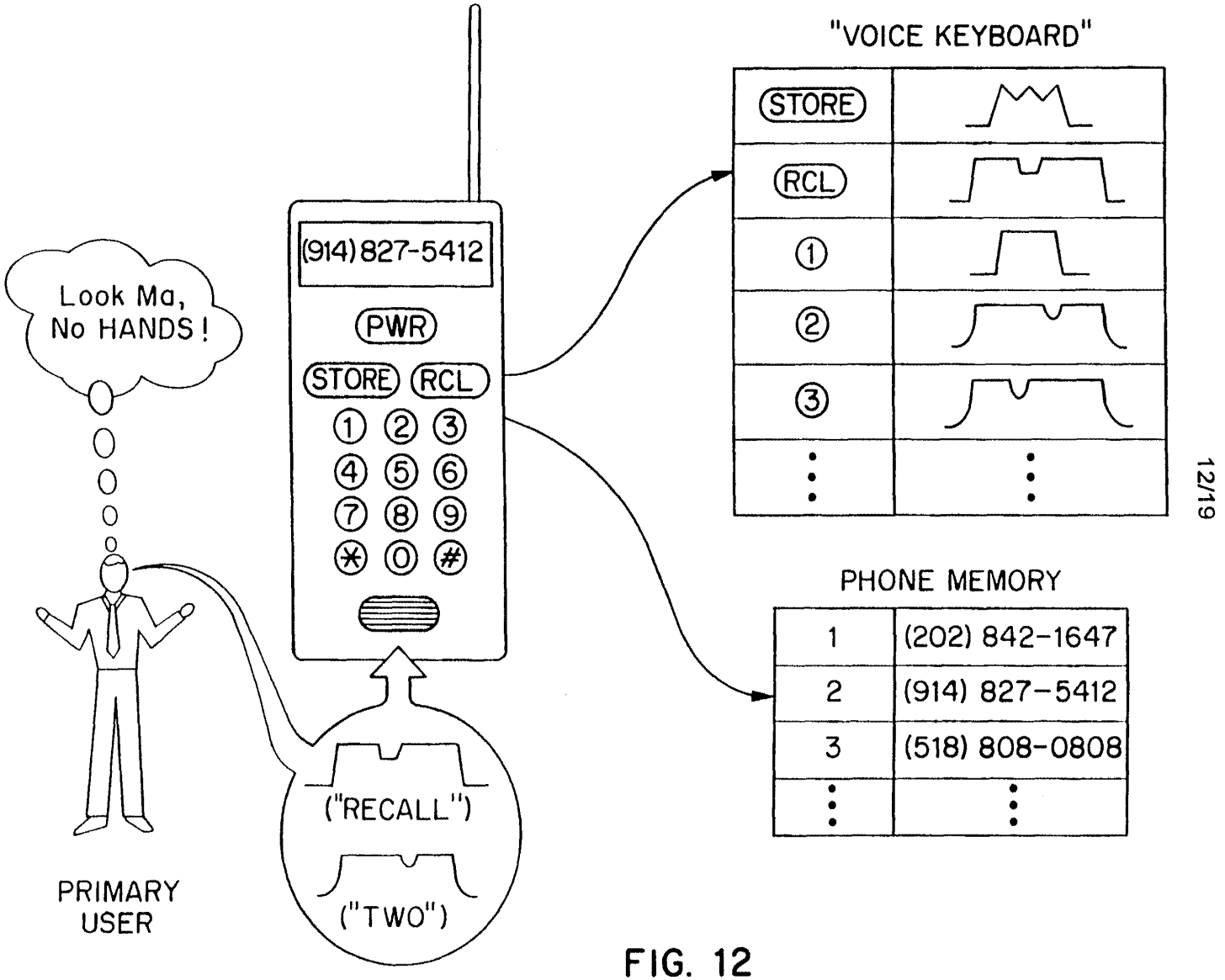
"VOICE KEYBOARD"
STORE
RCL
①
②
③
Look Ma,
No HANDS!
(914) 827-5412
PWR
STORE
RCL
1 2 3
4 5 6
7 8 9
* 0 #
PHONE MEMORY
1 (202) 842-1647
2 (914) 827-5412
3 (518) 808-0808
("RECALL")
("TWO")
PRIMARY
USER

FIG. 12

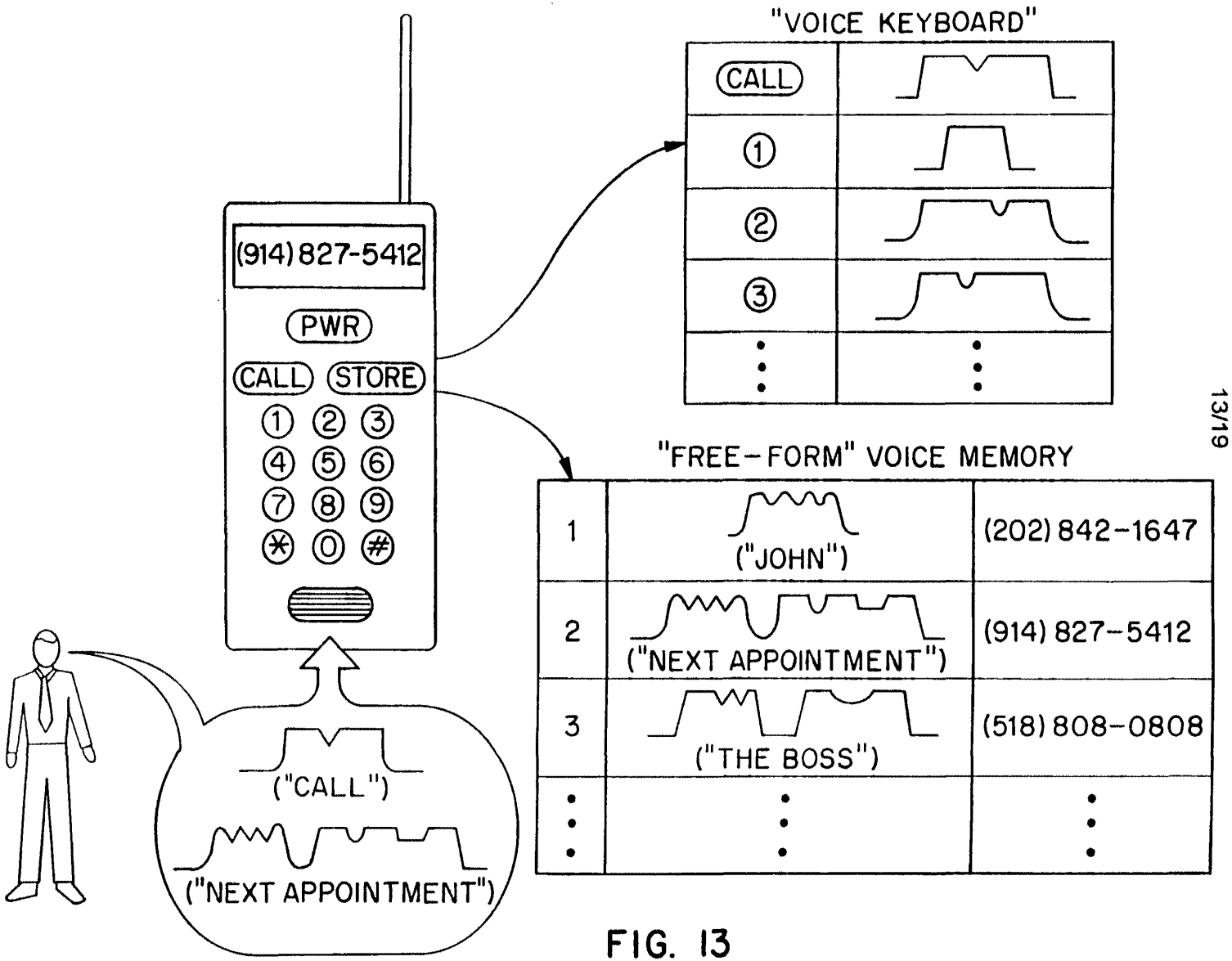
"VOICE KEYBOARD"
CALL
①
②
③
(914) 827-5412
PWR
CALL
STORE
① ② ③
④ ⑤ ⑥
⑦ ⑧ ⑨
✱ 0 #
"FREE-FORM" VOICE MEMORY
1
("JOHN")
(202) 842-1647
2
("NEXT APPOINTMENT")
(914) 827-5412
3
("THE BOSS")
(518) 808-0808
("CALL")
("NEXT APPOINTMENT")

FIG. 13

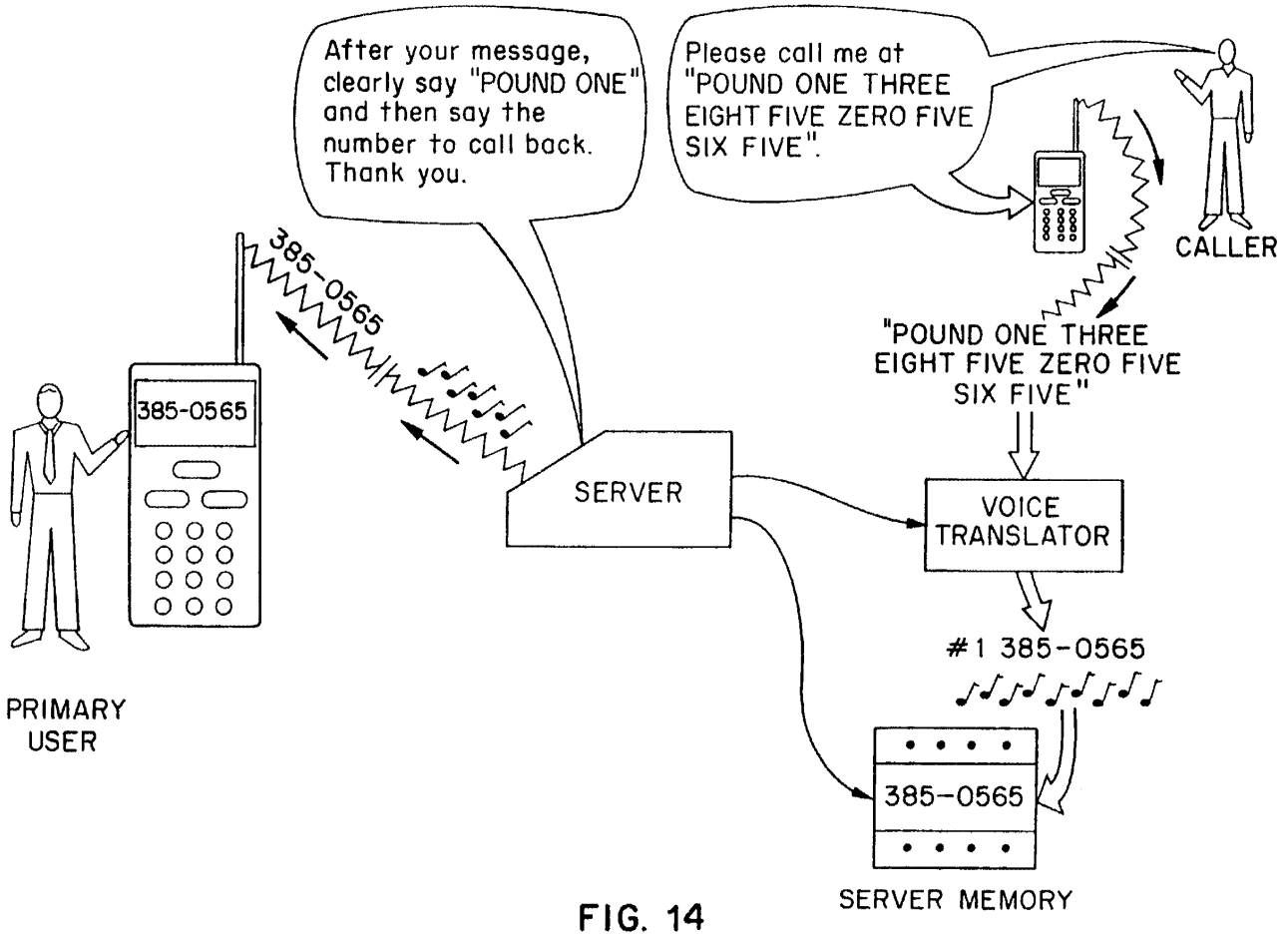
After your message, clearly say "POUND ONE" and then say the number to call back. Thank you.
Please call me at "POUND ONE THREE EIGHT FIVE ZERO FIVE SIX FIVE".
CALLER
385-0565
385-0565
"POUND ONE THREE EIGHT FIVE ZERO FIVE SIX FIVE"
SERVER
VOICE TRANSLATOR
#1 385-0565
385-0565
PRIMARY USER
SERVER MEMORY

FIG. 14

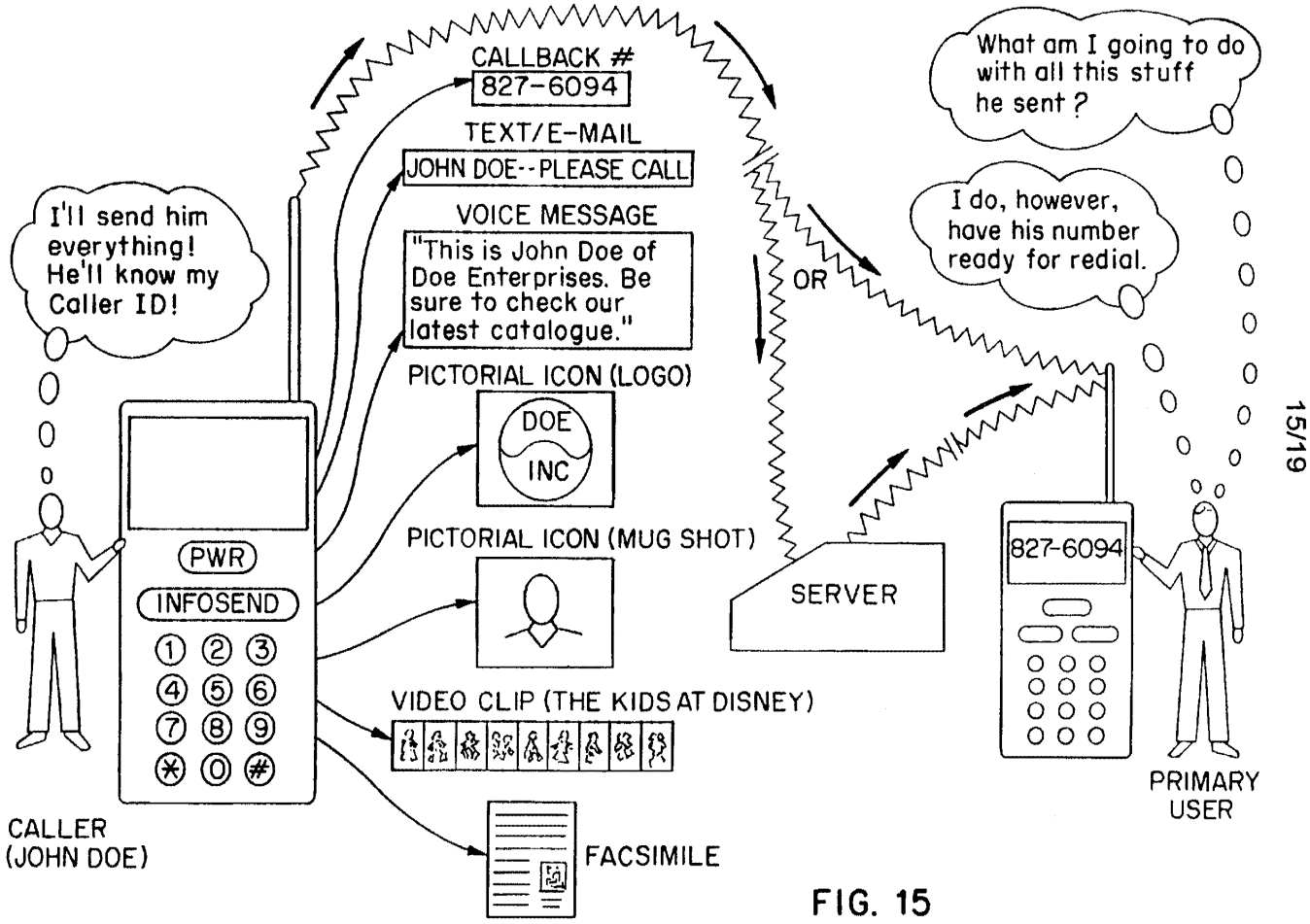
CALLBACK #
827-6094
TEXT/E-MAIL
JOHN DOE--PLEASE CALL
VOICE MESSAGE
"This is John Doe of Doe Enterprises. Be sure to check our latest catalogue."
PICTORIAL ICON (LOGO)
DOE
INC
PICTORIAL ICON (MUG SHOT)
VIDEO CLIP (THE KIDS AT DISNEY)
FACSIMILE
I'll send him everything! He'll know my Caller ID!
PWR
INFOSEND
1 2 3
4 5 6
7 8 9
* 0 #
CALLER (JOHN DOE)
OR
SERVER
What am I going to do with all this stuff he sent ?
I do, however, have his number ready for redial.
827-6094
PRIMARY USER

FIG. 15

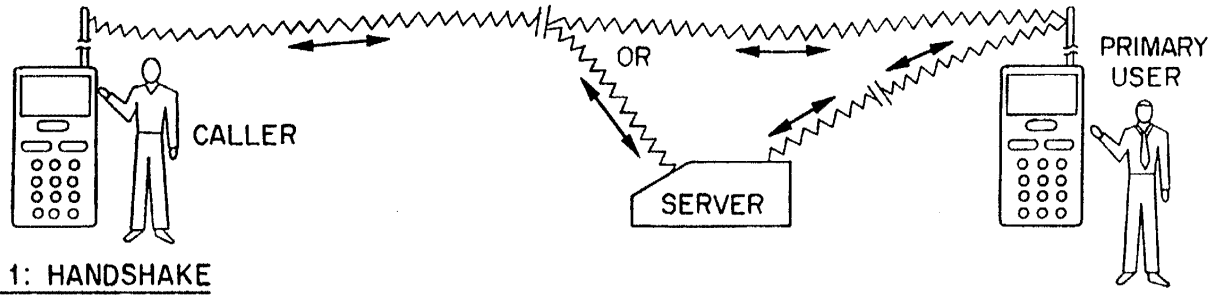

STEP 1: HANDSHAKE

a) What device are you? →
← b) The AT&T Communicator 2000. I use enhanced user information protocol.
d) The Motorola Smart phone. →
← c) What about you?
f) Phone #, Text, Voice mail, pictures, video, facsimile. →
← e) What do you have for me?
g) I'm not equipped for video. Send the rest with an identifying Field in Front of each.

STEP 2: TRANSMISSION

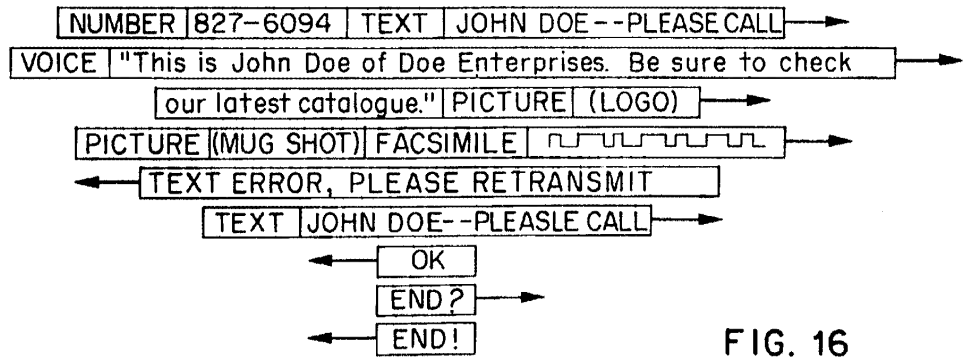

FIG. 16

Bright House Networks - Ex. 1008, Page 1670

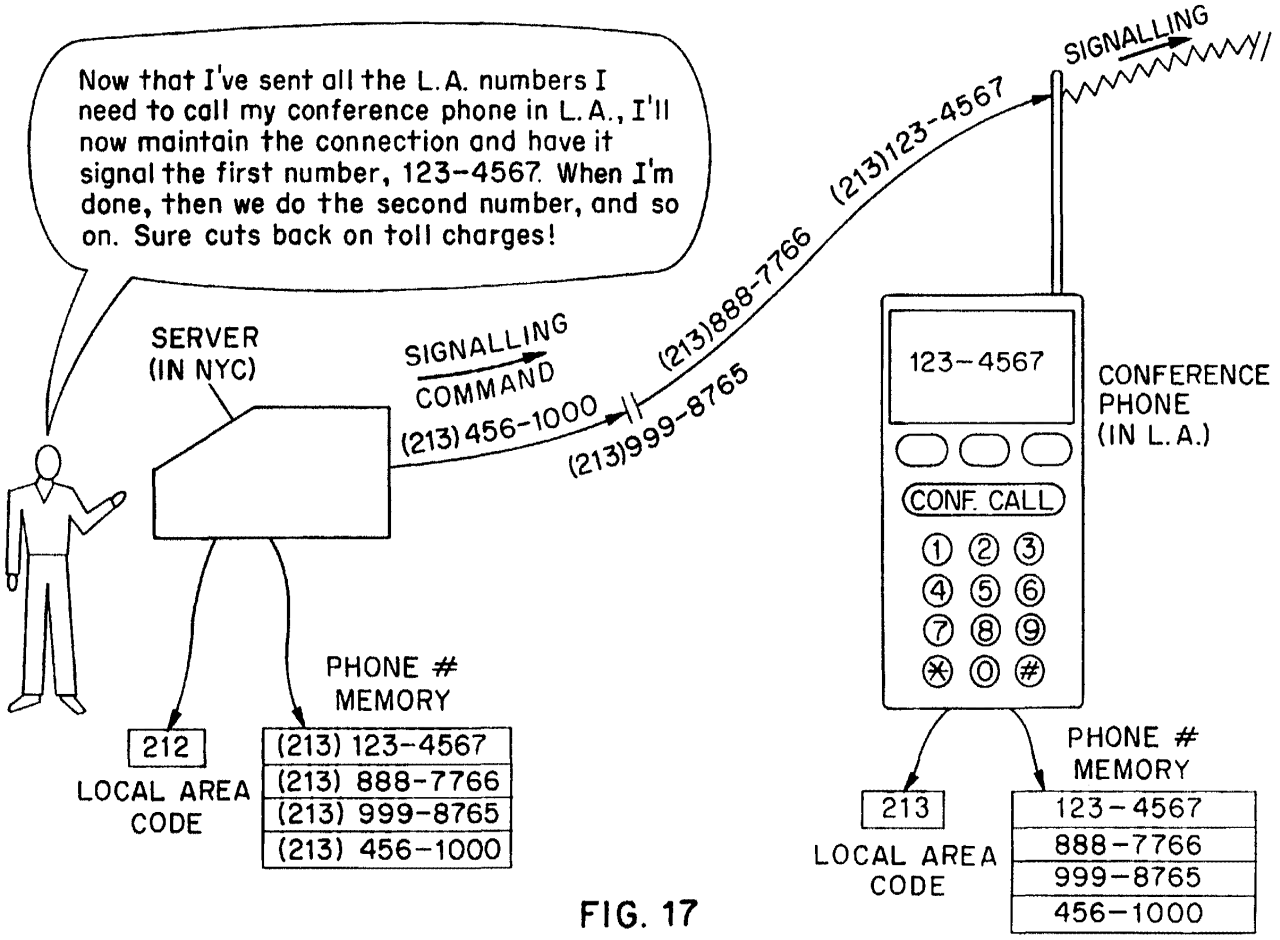
Now that I've sent all the L.A. numbers I need to call my conference phone in L.A., I'll now maintain the connection and have it signal the first number, 123-4567. When I'm done, then we do the second number, and so on. Sure cuts back on toll charges!
SERVER (IN NYC)
SIGNALLING
COMMAND
(213) 456-1000
(213)888-7766
(213)123-4567
(213)999-8765
SIGNALLING
123-4567
CONFERENCE PHONE (IN L.A.)
CONF. CALL
1 2 3
4 5 6
7 8 9
* 0 #
PHONE # MEMORY
212
LOCAL AREA CODE
(213) 123-4567
(213) 888-7766
(213) 999-8765
(213) 456-1000
PHONE # MEMORY
213
LOCAL AREA CODE
123-4567
888-7766
999-8765
456-1000

FIG. 17

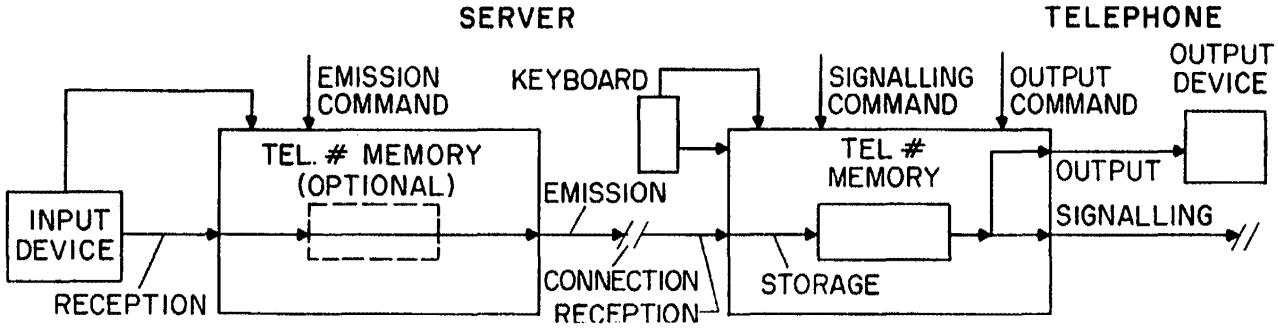

FIG. 18A

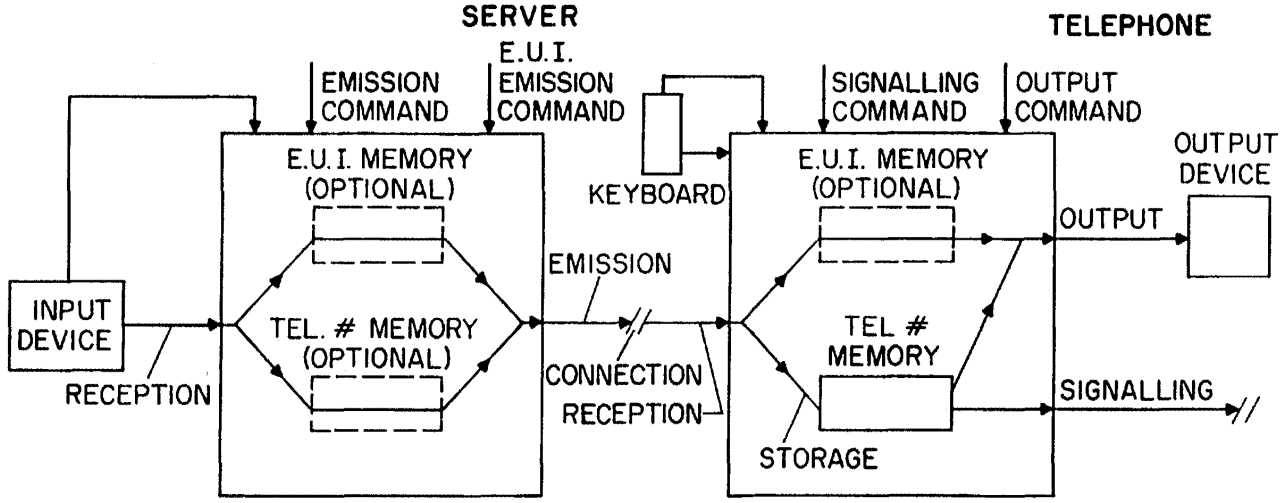

FIG. 18B

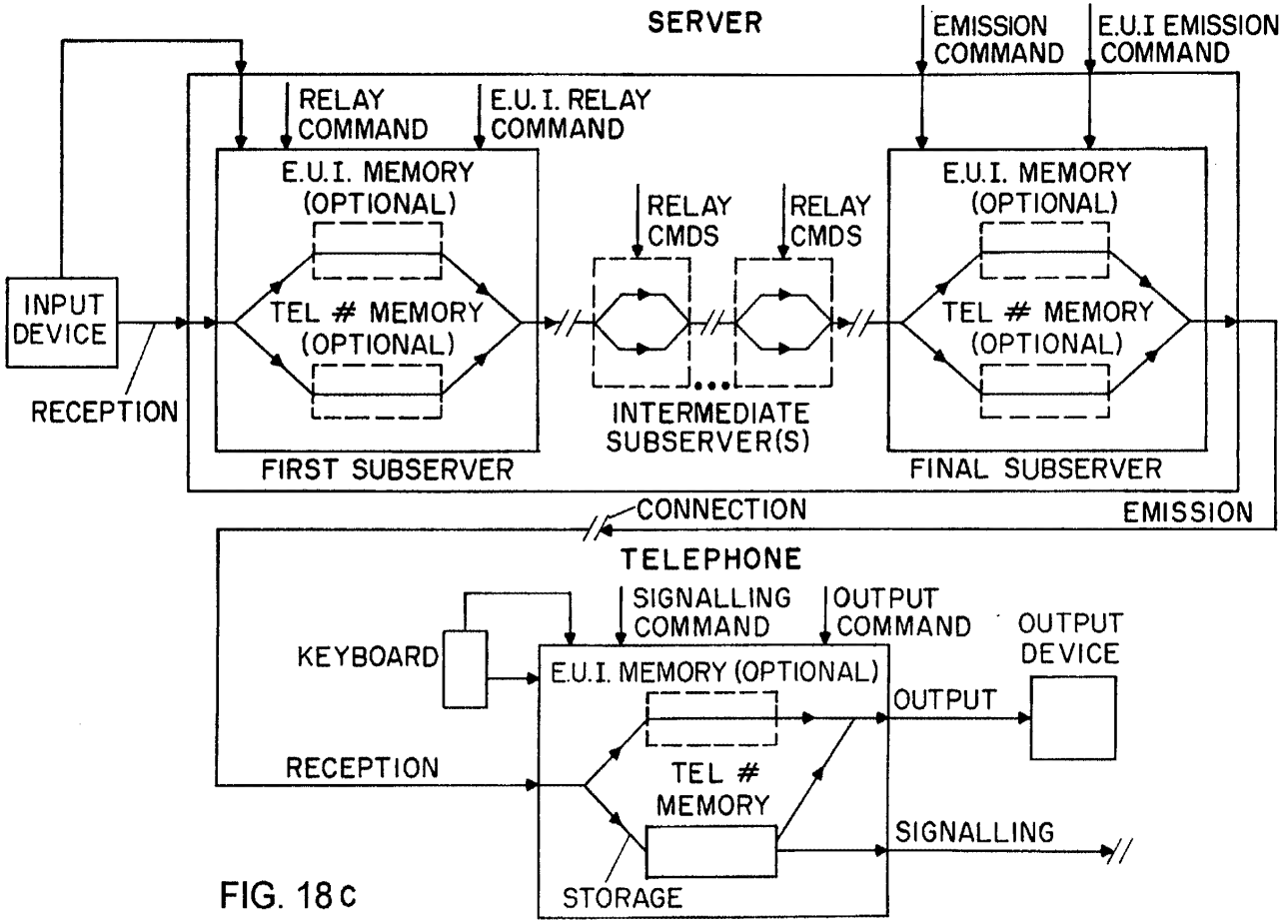

FIG. 18c

Bright House Networks - Ex. 1008, Page 1673

INTERNATIONAL SEARCH REPORT

International application No.
PCT/US98/04024

A. CLASSIFICATION OF SUBJECT MATTER

IPC(6) :H04M 1/27 3/52
US CL :379/88, 93.18, 93.23, 93.26, 216, 213, 355
According to International Patent Classification (IPC) or to both national classification and IPC

B. FIELDS SEARCHED

Minimum documentation searched (classification system followed by classification symbols)

U.S. : 379/88, 93.18, 93.23, 93.26, 216, 213, 355, 354, 97, 217, 201, 207, 142, 210, 211, 212, 67, 89, 202, 205, 206, 203, 204, 69

Documentation searched other than minimum documentation to the extent that such documents are included in the fields searched

Electronic data base consulted during the international search (name of data base and, where practicable, search terms used)

C. DOCUMENTS CONSIDERED TO BE RELEVANT

Category*	Citation of document, with indication, where appropriate, of the relevant passages	Relevant to claim No.
A	Mechanism to Automate Updating Obsolete Telephone Numbers, IBM Tech dis. bull. April 1994, Vol 37, No. 04A, pages 115, 116	1-20, 32-38
A	US 4,053,949 A (RECCA et al.) 11 October 1977	1-20, 32-38
A	US 4,830,919 A (BORGES et al.) 13 June 1989	1-20, 32-38
A	US 4,644,107 A (CLOWES et al.) 17 February 1987	1-20, 32-38
A	4,979,206 A (PADDEN et al.) 18 December 1990	1-20, 32-38

[X] Further documents are listed in the continuation of Box C. [ ] See patent family annex.

*	Special categories of cited documents:	"T"	later document published after the international filing date or priority date and not in conflict with the application but cited to understand the principle or theory underlying the invention
"A"	document defining the general state of the art which is not considered to be of particular relevance	"X"	document of particular relevance; the claimed invention cannot be considered novel or cannot be considered to involve an inventive step when the document is taken alone
"E"	earlier document published on or after the international filing date	"Y"	document of particular relevance; the claimed invention cannot be considered to involve an inventive step when the document is combined with one or more other such documents, such combination being obvious to a person skilled in the art
"L"	document which may throw doubts on priority claim(s) or which is cited to establish the publication date of another citation or other special reason (as specified)	"&"	document member of the same patent family
"O"	document referring to an oral disclosure, use, exhibition or other means		
"P"	document published prior to the international filing date but later than the priority date claimed		

Date of the actual completion of the international search 15 JUNE 1998	Date of mailing of the international search report 03 SEP 1998
Name and mailing address of the ISA/US Commissioner of Patents and Trademarks Box PCT Washington, D.C. 20231 Facsimile No. (703) 305-3230	Authorized officer DANIEL HUNTER Telephone No. (703) 308-6732

Form PCT/ISA/210 (second sheet)(July 1992)*

INTERNATIONAL SEARCH REPORT

International application No.
PCT/US98/04024

C (Continuation). DOCUMENTS CONSIDERED TO BE RELEVANT

Category*	Citation of document, with indication, where appropriate, of the relevant passages	Relevant to claim No.
X	Method and Apparatus for Automated Contextual Call Return, Calendering, and Address Book Search, IBM Tech. Disc. Bull. April 1994, pp373, 374	21, 22
X	US 5,212,721 A (DeLuca et al.) 18 May 1993 fig 2, 3; col 1 and 4	24-31, 39-46
X	US 5,148,473 (FREELAND et al.) 15 September 1992, abstract, fig 2, col 2 and 3.	21-31, 39-46
A	US 5,097,502 A (SUZUKI et al.) 17 March 1992	1-46
A	US 5,127,040 (D'AVELLO et al.) 30 June 1992	1-46
A	US 4,942,598 A (DAVIS) 17 July 1990	1-46
A	US 4,933,968 A (IGGULDEN) 12 June 1990	1-46

Form PCT/ISA/210 (continuation of second sheet)(July 1992)*

Electronic Acknowledgement Receipt

EFS ID:	7033719
Application Number:	11428822
International Application Number:	
Confirmation Number:	4565
Title of Invention:	Tandem access controller within the public switched telephone network
First Named Inventor/Applicant Name:	Samuel F. Wood
Customer Number:	32566
Filer:	Reena Kuyper
Filer Authorized By:	
Attorney Docket Number:	TEL-M-8801-1P-1C
Receipt Date:	18-FEB-2010
Filing Date:	05-JUL-2006
Time Stamp:	00:59:32
Application Type:	Utility under 35 USC 111(a)

Payment information:

Submitted with Payment	no

File Listing:

Document Number	Document Description	File Name	File Size(Bytes)/ Message Digest	Multi Part /.zip	Pages (if appl.)
1	Transmittal Letter	TLM-103C1CON2_IDS_before_OA_Final_2-17-10.pdf	45553 744a5c17fab5d65772ba99c880be59d14ddac934	no	6
Warnings:					
Information:					

2	Information Disclosure Statement (IDS) Filed (SB/08)	TLM-103C1CON2_PTO_1449_Final_2-17-10.pdf	81667 5fe686a1c3cc4554821f4f05e12f93fba7e3c27c	no	9
Warnings:					
Information:					
This is not an USPTO supplied IDS fillable form					
3	Foreign Reference	DE19813179A1.pdf	213826 9635e599bdee91f4220e17e9bb2727d1db7aaf19	no	6
Warnings:					
Information:					
4	Foreign Reference	EP0578374B1.pdf	1192645 cc6db4de04deef576154b895fcf204c183686d08	no	22
Warnings:					
Information:					
5	Foreign Reference	EP0704788A2.pdf	507567 f8aee6eec9496816dcda90714efc811d7948293d	no	11
Warnings:					
Information:					
6	Foreign Reference	EP0738093B1.pdf	618186 37028d9ff1a19bd6546472772011418819adb747	no	10
Warnings:					
Information:					
7	Foreign Reference	EP0858202B1.pdf	826019 96223b0313772bd5ce5519ff4c9a98dd5d19ca7b	no	13
Warnings:					
Information:					
8	Foreign Reference	EP0869688B1.pdf	1388525 f958a47e2a26aba3563b5db16dbfe1c02197ab30	no	23
Warnings:					
Information:					
9	Foreign Reference	EP0881848A2.pdf	985425 487a7acc0da807faa867535ffc4781e38ed681eb	no	19
Warnings:					
Information:					
10	Foreign Reference	EP0898431A1.pdf	553215 841998c9952157b248bb9044feed9bd327a7cde0	no	10

Warnings:					
Information:					
11	Foreign Reference	EP0918423B1.pdf	566714 c4d14f20c2ded001ad17389677d41fbb825a93a1	no	9
Warnings:					
Information:					
12	Foreign Reference	WO0184859A2.pdf	1030561 25f3b51a63619af7b062db732c6f41685896885b	no	28
Warnings:					
Information:					
13	Foreign Reference	WO01005078.pdf	2498923 dcaf61c7c6a29ad1a6a0980e7a9c3c041ca573fe	no	100
Warnings:					
Information:					
14	Foreign Reference	WO01024496.pdf	1918119 524b9f5deaa81c97376cf0e7fdf95be57f053206	no	50
Warnings:					
Information:					
15	Foreign Reference	WO01024498.pdf	2598235 fa8d0dca5da15fa452d7c87591d65fe774db5d97	no	61
Warnings:					
Information:					
16	Foreign Reference	WO01024500.pdf	1787464 8dd9b444d81c24a3ed4a5fa40b0ddc729e9cb8d4	no	45
Warnings:					
Information:					
17	Foreign Reference	WO01024501.pdf	1579011 604f4107649a689a4a62a2d9b2d1b40f7ce67a15	no	38
Warnings:					
Information:					
18	Foreign Reference	WO01024502.pdf	2071434 de89b7a3cb2d6a331dcb11717ceb5f2500e07bad	no	49
Warnings:					
Information:					
19	Foreign Reference	WO01024503.pdf	2448953 33a2f7aede6dac90b593d4049c09f4864492b430	no	60

Warnings:					
Information:					
20	Foreign Reference	WO94005111.pdf	4194995 e7a00f279eb60de5afe5a0e0590e33b16ab67ff9	no	101
Warnings:					
Information:					
21	Foreign Reference	WO95034985.pdf	600038 f0654da9610837bbbc34e82580680348982ff5bb	no	17
Warnings:					
Information:					
22	Foreign Reference	WO97031492.pdf	1285593 d4a886a0a90f6bcc4a79ff59a0c29ed956fadadb	no	44
Warnings:					
Information:					
23	Foreign Reference	WO97033421.pdf	3779159 6d9a07eab9926a5e5fd00214d328151bc4a3add5	no	88
Warnings:					
Information:					
24	Foreign Reference	WO97044943.pdf	563420 cecd76a19c7dd25df4a73d40d9f99d5124ac2e2b	no	15
Warnings:					
Information:					
25	Foreign Reference	WO98000988.pdf	2266457 bdf93ec36bf60109a1f511920595139e98c9ea48	no	52
Warnings:					
Information:					
26	Foreign Reference	WO98004065.pdf	1288809 14d2df81e7313ab73aff9effa33dbbcfd0aefaca	no	36
Warnings:					
Information:					
27	Foreign Reference	WO98010538.pdf	7075655 cfbd96a14542f2583ebcef98d2d50dbd68578568	no	160
Warnings:					
Information:					
28	Foreign Reference	WO98016051.pdf	423532 29d7ec0045766cef5fb25961fb971789596f99a7	no	12

Warnings:					
Information:					
29	Foreign Reference	WO98021911.pdf	921175 b4dd655f383a2312e1f2b4e6c9414b5df7f527e8	no	23
Warnings:					
Information:					
30	Foreign Reference	WO98030008.pdf	1304109 d87e70a262ed966d9cfa31c823dbf4b23211fbb3	no	39
Warnings:					
Information:					
31	Foreign Reference	WO98037665.pdf	3017648 39cb2a09f30002c148e6d3c757522b44cb8959ef	no	82
Warnings:					
Information:					
32	Foreign Reference	WO99012365.pdf	1325530 7dd84cab4afccca97bb9933a7935f5cc75e836d9	no	34
Warnings:					
Information:					
33	Foreign Reference	WO99019988.pdf	1872215 427dc86438c62f281b3b82c454341256d5b337a4	no	45
Warnings:					
Information:					
34	Foreign Reference	WO99020059.pdf	2143779 f3f037cdc8253fea7c0ac99c658fe73c4880aa49	no	51
Warnings:					
Information:					
35	Foreign Reference	WO99035802.pdf	2571273 8ea34ef3340de61ca3e5a72051a640d29b52ff4c	no	80
Warnings:					
Information:					
36	Foreign Reference	WO99045687.pdf	4089362 ca99e76610fb79e387b9a3d6d0e7ae9c7d1af6e9	no	68
Warnings:					
Information:					
37	NPL Documents	1_RFC3298.pdf	5451870 24963b75831bcd7e9b3df2f7c6926c34b8fe6ed5	no	18

Warnings:					
Information:					
38	NPL Documents	2_implementing_follow-medb.pdf	6787819 221cc5fe63a102df7abf19c82abae418a31b1229	no	15
Warnings:					
Information:					
39	NPL Documents	3_NewServices.pdf	1139940 681a03eada065cd55e5d7b5ef8f606d930ddcdf8	no	3
Warnings:					
Information:					
40	NPL Documents	4_NaturalMicrosystem.pdf	1540011 7b3a095a168ba933f3d2607fa9f3c068f303934e	no	3
Warnings:					
Information:					
41	NPL Documents	5_Pipedream.pdf	1173452 ede51c41d31d733bc908435850c929171feb8c17	no	3
Warnings:					
Information:					
42	NPL Documents	6_voiceoverip.pdf	2706470 b903c6eac21aacffac80c4e32e63f22fed362bde	no	6
Warnings:					
Information:					
43	NPL Documents	7_Broadword_Overview.pdf	1739140 2e1a36760f8256f86007f08b43f204e76af2b50f	no	2
Warnings:					
The page size in the PDF is too large. The pages should be 8.5 x 11 or A4. If this PDF is submitted, the pages will be resized upon entry into the Image File Wrapper and may affect subsequent processing					
Information:					
44	NPL Documents	8_BroadSoft_introduces.pdf	846354 8e326b95248b898cfb8882438dd05b1e46a53dad	no	2
Warnings:					
Information:					
45	NPL Documents	9_Broadsoft_unveils.pdf	75100 7a443ba1c7d46af0d54677b15355a534ca2cc8e4	no	3
Warnings:					
Information:					

46	NPL Documents	10_ADC_Telecommunications_SS7.pdf	3216722 87bc7fe570b67f96636a18140e0843a87c1c5f31	no	25
Warnings:					
Information:					
47	NPL Documents	11_M_Carmichael.pdf	99231 18f5989e1b2afc056fb9013c8d301a0efae22ff8	no	2
Warnings:					
Information:					
48	NPL Documents	12_EP_Search_Report_04252483.pdf	72963 b0fe446c6ee325109ffaa38870fb0dc566ad392f	no	3
Warnings:					
Information:					
49	NPL Documents	13_US_app_09406322_Schuster_et_al_9-27-99.pdf	1806792 075b46f750b3b0e522fb170ef371c455bc895947	no	41
Warnings:					
Information:					
50	NPL Documents	14_US_app_09515798_Schuster_et_al_2-29-00.pdf	2302643 efd0f692a62b5b51182cca103f621d08acc6e3f6	no	52
Warnings:					
Information:					
		Total Files Size (in bytes):	90593298		

This Acknowledgement Receipt evidences receipt on the noted date by the USPTO of the indicated documents, characterized by the applicant, and including page counts, where applicable. It serves as evidence of receipt similar to a Post Card, as described in MPEP 503.

<u>New Applications Under 35 U.S.C. 111</u>
If a new application is being filed and the application includes the necessary components for a filing date (see 37 CFR 1.53(b)-(d) and MPEP 506), a Filing Receipt (37 CFR 1.54) will be issued in due course and the date shown on this Acknowledgement Receipt will establish the filing date of the application.

<u>National Stage of an International Application under 35 U.S.C. 371</u>
If a timely submission to enter the national stage of an international application is compliant with the conditions of 35 U.S.C. 371 and other applicable requirements a Form PCT/DO/EO/903 indicating acceptance of the application as a national stage submission under 35 U.S.C. 371 will be issued in addition to the Filing Receipt, in due course.

<u>New International Application Filed with the USPTO as a Receiving Office</u>
If a new international application is being filed and the international application includes the necessary components for an international filing date (see PCT Article 11 and MPEP 1810), a Notification of the International Application Number and of the International Filing Date (Form PCT/RO/105) will be issued in due course, subject to prescriptions concerning national security, and the date shown on this Acknowledgement Receipt will establish the international filing date of the application.

IN THE UNITED STATES PATENT AND TRADEMARK OFFICE

In re the Application of:	)	**Customer No.:**	49,637
Samuel F. WOOD, et al.	)	**Confirmation No.:**	4565
Serial No.: 11/428,822	)	**Group Art Unit:**	2614
Filed: July 5, 2006	)	**Examiner:**	Al Aubaidi, Rasha S.
For: TANDEM ACCESS CONTROLLER WITHIN THE PUBLIC SWITCHED TELEPHONE NETWORK	)	**Docket No.:**	TLM-103.C1CON2

SUPPLEMENTAL INFORMATION DISCLOSURE STATEMENT UNDER 37 C.F.R. 1.97(b)

Commissioner for Patents
P.O. Box 1450
Alexandria, VA 22313-1450

Sir:

In compliance with the duty of disclosure under 37 CFR § 1.56, 37 CFR §§ 1.97, and 1.98, Applicants bring the following documents, of possible interest to the subject matter of this application, to the attention of the Examiner. Each of these documents is listed on the attached form PTO-1449. Applicants are providing copies of the listed documents, except for U.S. patents and U.S. patent publication applications. In the event the Examiner would like copies of the U.S. patents and published applications as well, the Examiner is requested to advise the undersigned. Applicants respectfully request the Examiner to consider and make these documents of record with respect to this application. In addition, for the Examiner's convenience, Applicants are providing below comments on select references. The Examiner is requested to make an independent determination on the relevance of the documents.

Bright House Networks - Ex. 1008, Page 1683

1. RFC 3298 Service in the PSTN:

This document describes protocols for use in an internet or other intelligent network (PSTN/IN). The protocols that are described are for use to optimize the network. This document also discloses "features" such as "call forwarding" that can be applied within a network, however, with modifications to the existing networks and limited routing only within a local geographic area. Moreover, this document does not disclose web-based access by subscribers to request features, nor first call and second functionalities.

2. Implementing Automatic Location Update for Follow-Me Database Using VoIP and Bluetooth Technologies

This document discloses a particular method of using databases in a VoIP network to enable a user to request call features such as "follow-me" using VoIP and Bluetooth technologies. Again, this document describes "features," but via a method that requires modifications to the existing networks and limited routing only within a local geographic area. Again, this document does not disclose web-based access by subscribers to request features, nor first call and second functionalities.

3. New Services Demand Integration

This document recognizes that networks, such as the public switched telephone network (PSTN) and the internet (packet-based) networks are fast converging and that the new emerging networks will require new services to facilitate user interfaces. It should be noted that the document publication is after Applicants' priority date (parent patent no. 6,574,328, filed on May 2000). This document is of background interest only and does not address application of "features," via web access or otherwise, nor first call and second functionalities.

4. Natural Microsystems

This document describes the SS7 software product that natural Microsystems introduced to the market. SS7 is a standard protocol used in the PSTN for signaling call management within the network. SS7 was widely known and used by carriers in the PSTN to perform circuit switching operations. Applicants' parent patent no. 6,574,328, filed on May 2000, describes the SS7 protocol.

Bright House Networks - Ex. 1008, Page 1684

The document is of background interest only and does not address application of "features," via web access or otherwise, nor first call and second functionalities.

5. Voice Over Internet Protocol (VoIP) Technology will Make the Phone Box Something That Really Talks

This document describes the advantages of VoIP and VoIP telephones that will make new technologies available to telephone users and the advantages of VoIP. The document is of background interest only and does not address application of "features," via web access or otherwise, nor first call and second functionalities.

6. Using Optimization to Achieve Efficient Quality of Service in Voice Over IP Networks

This document recognizes the need for improved quality service in VoIP networks. As recognized in Applicants' parent disclosure, VoIP's quality of service ("QOS") was less than the quality of the PSTN networks. The document is of background interest only and does not address application of "features," via web access or otherwise, nor first call and second functionalities.

7. Broadsoft Literature Broadworks Overview

This document describes Broadworks, a product that consists of software modules, which may be integrated into a hardware platform such as the Sun Solaris Network Platform for use at call centers and other such large enterprises. Broadworks discloses a system for adding "call features" to an existing Class 5[1] and packet networks. Broadworks discloses a set of tools that can be used to

---

[1] Dictionary definitions, "Newton's Telecom Dictionary," 15th Edition, February 1999, ISBN Number 1-57820-001-8

Class 4 Office
The fourth level in AT&T's long distance toll switching hierarchy – the major switching center to which toll calls from Class 5 offices are sent. In U.S. common carrier telephony service, a toll center designated "Class 4C" is an office where assistance in completing incoming calls is provided in addition to other traffic. A toll center designated "Class 4P" is an office where operators handle only outbound calls, or where switching is performed without operator assistance.

Class 5 Office
An end office. Your local central office. The lowest level in the hierarchy of local and long distance switching which AT&T set up when it was "The Bell System." A class 5 office is a local Central Office that serves as a network entry point for station loops and certain special-service lines. Also called an End Office. Classes 1, 2, 3, and 4 are toll offices in the telephone network.

See also, Engineering and Operations in the Bell system, Second edition, 1977,1983, Bell telephone Laboratories,

Bright House Networks - Ex. 1008, Page 1685

replace the existing Class 5 central office switches. This document discloses a web-based interface to provide users access, and "call features," but proposes an implementation (via replacement of the existing edge switch) and therefore, does not accommodate the existing network infrastructure. Moreover, the features are limited to a local geographic area because of the implementation via the edge switch and there are no first call and second call functionalities. It should be noted that this document antedates Applicants' parent patent no. 6,574,328, which has a priority date of May 2000.

8. BroadSoft Introduces Industry's First Complete Service Delivery and Creation Product Suite for Enhanced Telephony Services Broadworks

This document discloses a system for integrating services that are web-enabled and offer specific features such as group directories, call forwarding, option configurations, in to the PSTN and packet (VoIP) networks. The system disclosed is web-enabled and offers specific features such as group directories, call forwarding, option configuration, messaging, and auto attendant services. However, these features are implemented in a different way, by requiring replacement of the existing edge switch with a Broadsoft switch (unlike Applicants' implementation, which works with the existing edge switch). Again, the features are limited to a local geographic area and there are no first call and second call functionalities.

9. Broadsoft Unveils Advanced Architecture for the Rapid and Cost Effective Delivery of Enhanced Communications Services

This article discloses a set of software tools for building a processing platform directed to a VoIP implementation. This document discloses a system for integrating services for packet (VoIP) networks. The system disclosed is web enabled and offers features such as group directories, call forwarding, option configuration, messaging, and auto attendant services. However, these features are implemented in a different way, by requiring replacement of the existing edge switch with a Broadsoft switch (unlike Applicants' implementation, which works with the existing edge switch). Again, the features are limited to a local geographic area and there are no first call and second call functionalities.

---

e.g. Section 4 Network and Systems, Network Structures and Planning,
also See index under Electronic Switching system(s)

Bright House Networks - Ex. 1008, Page 1686

10. U.S. Patent No. 6853714 to Liljestrand

This patent is directed to an apparatus and method for enhanced telecommunication services. This patent discloses another VoIP approach to changing the network on a large scale. It proposes an upgrade to the existing carriers' equipment and network architecture. The patent merely mentions the possibility of web access, but does not disclose how to accomplish it, and does not disclose first call and second call functionalities.

11. U.S. Patent No. 4,348,554, U.S. Patent No. 4,611,094 & U.S. Patent No. 4,611,096 to Asmuth

The Asmuth patents disclose a system and method to upgrade the architecture and infrastructure of the public switched network (PSTN) to enable the system to direct telephone calls to a selected group of customers with decisions controlled by the carrier. These patents also do not address web access application of features by subscribers, nor application of features in the entire fabric of networks, or first call and second call functionalities.

Finally, Applicants bring their related patents and applications to the Examiner's attention.

Patent or Application Number	**Title**	**Filed**	**Docket Number**
6529596	Web-Based Control of Telephone	5/4/00	TLM-101
6532288	Tandem Access Control Processor Connected to the Public Switched Telephone Network for Controlling Features	5/4/00	TLM-102
6574328	Telephone Call Control System for the Public Switched Telephone Network	5/4/00	TLM-103

Bright House Networks - Ex. 1008, Page 1687

Patent or Application Number	Title	Filed	Docket Number
7324635	Branch Calling and Caller ID Based Call Routing Telephone Features	4/30/03	TLM-103C1
7587036	Tandem Access Controller Within the Public Switched Telephone Network	7/5/06	TLM-103C1CON
11/428,825	Tandem Access Controller Within the Public Switched Telephone Network	10/26/06	TLM-103C1CON3
11/948,965	Branch Calling and Caller ID Based Call Routing and Telephone Features	3/27/08	TLM-103C1DIV

This Supplemental Information Disclosure Statement is timely submitted under 37 CFR § 1.97(b)(3), that is, before mailing of a first office action on the merits. Thus, no petition or fee is required at this time. If the U.S. Patent Office determines that a fee is necessary, this submission should be considered a petition, and the U.S. Patent Office is hereby authorized to charge any fee necessary to Deposit Account No. **50-3102** of Berry & Associates P.C.

Respectfully submitted,

Dated: February 17, 2010

By: /Reena Kuyper/
Reena Kuyper
Registration No. 33,830

Berry & Associates P.C.
9229 Sunset Blvd., Suite 630
Los Angeles, California 90069
(310) 247-2860
Customer No. 49,637

UNITED STATES PATENT AND TRADEMARK OFFICE

Commissioner for Patents
United States Patent and Trademark Office
P.O. Box 1450
Alexandria, VA 22313-1450
www.uspto.gov

PATENT LAW GROUP LLP
2635 NORTH FIRST STREET
SUITE 223
SAN JOSE CA 95134

COPY MAILED

DEC 17 2007

OFFICE OF PETITIONS

In re Application of :
Samuel F. Wood et al. :
Application No. 11/428,822 : DECISION ON PETITION
Filed: July 5, 2006 : TO MAKE SPECIAL UNDER
Attorney Docket No. TEL-M-8801-1P-1C : 37 CFR 1.102(c)(1)
:

This is a decision on the petition under 37 CFR 1.102(c)(1), filed November 8, 2007, to make the above-identified application special based on applicant's age as set forth in M.P.E.P. § 708.02, Section IV.

The petition is **GRANTED.**

A grantable petition to make an application special under 37 CFR 1.102(c)(1) and MPEP § 708.02, Section IV: Applicant's Age, must be accompanied by evidence showing that at least one of the applicants is 65 years of age, or more, such as a birth certificate or a statement by applicant. No fee is required.

The instant petition includes a statement from one of the applicant's declaring that he is 65 years of age or older. Accordingly, the above-identified application has been accorded "special" status.

Telephone inquiries concerning this decision should be directed to Terri Williams at 571-272-2991.

All other inquiries concerning either the examination or status of the application should be directed to the Technology Center.

The application is being forwarded to the Technology Center Art Unit 2614 for action on the merits commensurate with this decision.

T. Williams

Terri Williams
Petitions Examiner
Office of Petitions

IN THE UNITED STATES PATENT AND TRADEMARK OFFICE

Applicant(s):	Samuel F. Wood, Jerry A. Klein, Margaret Susan Asprey		
Assignee:	Telemaze LLC		
Title:	Tandem Access Controller Within the Public Switched Telephone Network		
Serial No.:	11/428,822	Filing Date:	July 5, 2006
Examiner:	Not yet known	Group Art Unit:	2614
Docket No.:	TEL-M-8801-1P-1C		

San Jose, California
November 8, 2007

Commissioner for Patents
P. O. Box 1450
Alexandria, VA 22313-1450

PETITION TO MAKE SPECIAL UNDER 37 C.F.R. §1.102 (C)(1) DUE TO APPLICANT'S AGE

Dear Commissioner:

Applicant hereby petitions that the above application be made special under 37 C.F.R. §1.102 (c)(1) as stated in MPEP §708.02 for the reason that Applicant's age is 65 or greater. Attached is a Verified Statement of Applicant's Age.

Certificate of Electronic Transmission
I hereby certify that this correspondence is being submitted electronically to the United States Patent and Trademark Office using EFS-Web on the date shown below.

/Brian D Ogonowsky/ — Attorney for Applicant(s)
November 8, 2007 — Date of Signature

Respectfully submitted,

/Brian D Ogonowsky/

Brian D. Ogonowsky
Attorney for Applicant
Reg. No. 31,988

PATENT LAW GROUP LLP
2635 N. FIRST ST.
SUITE 223
SAN JOSE, CA 95134
(408) 382-0480
FAX (408) 382-0481

Bright House Networks - Ex. 1008, Page 1690

IN THE UNITED STATES PATENT AND TRADEMARK OFFICE

Applicant(s):	Samuel F. Wood, Jerry A. Klein, Margaret Susan Asprey		
Assignee:	Telemaze LLC		
Title:	Tandem Access Controller Within the Public Switched Telephone Network		
Serial No.:	11/428,822	Filing Date:	July 5, 2006
Examiner:	Not yet known	Group Art Unit:	2614
Docket No.:	TEL-M-8801-1P-1C		

VERIFIED STATEMENT OF APPLICANT'S AGE

I am a co-inventor in the application identified above.

I declare that I am 68 years old. I was born on MARCH 4, 1939.

I declare that all statements made herein of my own knowledge are true, all statements made herein on information and belief are believed to be true, and all statements made herein are made with the knowledge that willful false statements and the like so made are punishable by fine or imprisonment or both as set forth under 18 U.S.C. 1001, and that violations of this paragraph may jeopardize the validity of the application or this document, or the validity or enforceability of any patent, trademark registration, or certificate resulting therefrom.

Date: 11/5/07

By: _____

Jerry A. Klein
671 Milverton Road
Los Altos, CA 94022

PATENT LAW
GROUP LLP
2635 N. FIRST ST.
SUITE 223
SAN JOSE, CA 95134
(408) 382-0480
FAX (408) 382-0481

Bright House Networks - Ex. 1008, Page 1691

Electronic Patent Application Fee Transmittal

Application Number:	11428822
Filing Date:	05-Jul-2006
Title of Invention:	Tandem access controller within the public switched telephone network
First Named Inventor/Applicant Name:	Samuel F. Wood
Filer:	Brian D. Ogonowsky/Edith Fuentes
Attorney Docket Number:	TEL-M-8801-1P-1C

Filed as Large Entity

Utility Filing Fees

Description	Fee Code	Quantity	Amount	Sub-Total in USD($)
Basic Filing:				
Pages:				
Claims:				
Miscellaneous-Filing:				
Petition:				
Petition fee- 37 CFR 1.17(h) (Group III)	1464	1	130	130
Patent-Appeals-and-Interference:				
Post-Allowance-and-Post-Issuance:				
Extension-of-Time:				

Description	Fee Code	Quantity	Amount	Sub-Total in USD($)
Miscellaneous:				
			Total in USD ($)	130

Electronic Acknowledgement Receipt

EFS ID:	2444680
Application Number:	11428822
International Application Number:	
Confirmation Number:	4565
Title of Invention:	Tandem access controller within the public switched telephone network
First Named Inventor/Applicant Name:	Samuel F. Wood
Customer Number:	32566
Filer:	Brian D. Ogonowsky/Edith Fuentes
Filer Authorized By:	Brian D. Ogonowsky
Attorney Docket Number:	TEL-M-8801-1P-1C
Receipt Date:	08-NOV-2007
Filing Date:	05-JUL-2006
Time Stamp:	19:31:43
Application Type:	Utility under 35 USC 111(a)

Payment information:

Submitted with Payment	yes
Payment was successfully received in RAM	$130
RAM confirmation Number	3532
Deposit Account	

File Listing:

Document Number	Document Description	File Name	File Size(Bytes) /Message Digest	Multi Part /.zip	Pages (if appl.)

1	Petition for review by the Office of Petitions.	TEL-M-8801-1P-1C_Petition-to-Make-Special.pdf	94031 257cca86670d231cbc3db35a8b7ba97d973b8402	no	1
Warnings:					
Information:					
2	Miscellaneous Incoming Letter	TEL-M-8801-1P-1C_Verified-Statement-of-Age.pdf	128095 74eadb0a87660c8735a292f22362942f41552e75	no	1
Warnings:					
Information:					
3	Fee Worksheet (PTO-06)	fee-info.pdf	8189 d50b4cb23ad22587d5e5267bc7542217b7d20ed2	no	2
Warnings:					
Information:					
			Total Files Size (in bytes):	230315	

This Acknowledgement Receipt evidences receipt on the noted date by the USPTO of the indicated documents, characterized by the applicant, and including page counts, where applicable. It serves as evidence of receipt similar to a Post Card, as described in MPEP 503.

New Applications Under 35 U.S.C. 111
If a new application is being filed and the application includes the necessary components for a filing date (see 37 CFR 1.53(b)-(d) and MPEP 506), a Filing Receipt (37 CFR 1.54) will be issued in due course and the date shown on this Acknowledgement Receipt will establish the filing date of the application.

National Stage of an International Application under 35 U.S.C. 371
If a timely submission to enter the national stage of an international application is compliant with the conditions of 35 U.S.C. 371 and other applicable requirements a Form PCT/DO/EO/903 indicating acceptance of the application as a national stage submission under 35 U.S.C. 371 will be issued in addition to the Filing Receipt, in due course.

New International Application Filed with the USPTO as a Receiving Office
If a new international application is being filed and the international application includes the necessary components for an international filing date (see PCT Article 11 and MPEP 1810), a Notification of the International Application Number and of the International Filing Date (Form PCT/RO/105) will be issued in due course, subject to prescriptions concerning national security, and the date shown on this Acknowledgement Receipt will establish the international filing date of the application.

OIPE JUL 21 2006 PATENT & TRADEMARK OFFICE

IN THE UNITED STATES PATENT AND TRADEMARK OFFICE

Applicant(s):	Samuel F. Wood, Jerry A. Klein, Margaret Susan Asprey		
Assignee:	Telemaze LLC		
Title:	Tandem Access Controller Within the Public Switched Telephone Network		
Serial No.:	11/428,822	Filing Date:	July 5, 2006
Examiner:	Not yet known	Group Art Unit:	2614
Docket No.:	TEL-M-8801-1P-1C		

San Jose, California
July 17, 2006

Mail Stop Amendment
Commissioner for Patents
P. O. Box 1450
Alexandria, VA 22313-1450

INFORMATION DISCLOSURE STATEMENT UNDER 37 CFR § 1.97(b)

Dear Sir:

Pursuant to 37 C.F.R. § 1.56, § 1.97 and § 1.98, the documents listed on the accompanying form PTO/SB/08A are called to the attention of the Examiner for the above patent application. Copies of the References are not included because they were cited in the parent application no. 10/426,279, filing date April 30, 2003.

1. A very large quantity of prior art is cited in the PTO/SB/08A form (formerly PTO 1449) because the present invention is related to the invention in U.S. Patent 6,614,781 to Elliot, and the identified prior art is copied from the "References Cited" section of that patent. There is no other reason for why the Applicants believe the identified art is material to the present claims. Only a few of the prior art documents are discussed below.

2. Various prior art documents describe systems in which telephone features are only applied once a call reaches the called party's central office. In contrast, Applicants' claims specify that the telephone features are applied before the call reaches the terminating central office. This provides various important advantages, discussed in the application. Other distinguishing aspects of the claims also exist.

PATENT LAW GROUP LLP
2635 N. FIRST ST.
SUITE 223
SAN JOSE, CA 95134
(408) 382-0480
FAX (408) 382-0481

3. U.S. Patent 6,614,781 to Elliot discloses a method of implementing a telephone feature that requires a change, modification, or enhancement to the software of the central office of the PSTN. To use the features offered by the Elliot '781 patent, the call must reach the central office offering the feature.

4. U.S. Patents 6,445,694 and 6,785,266 to Swartz disclose methods to provide telephone features, where the processing that provides the features occurs outside of the PSTN.

5. U.S. Patent 6,094,478 to Shepherd describes a processor for providing features, where the processor is located at the terminating central office.

6. U.S. Patent 6,853,714 to Liljestrand is similar to the Shepherd patent in that the processing for providing telephone features occurs at the central office.

Citation of these documents shall not be construed as:

1. an admission that the documents are necessarily prior art with respect to the instant invention;

2. a representation that a search has been made; or

3. an admission that the information cited herein is, or is considered to be, material to patentability as defined in § 1.56(b).

I hereby certify that this correspondence is being deposited with the United States Postal Service as First Class Mail in an envelope addressed to: Mail Stop Amendment, Commissioner for Patents, P. O. Box 1450, Alexandria, VA 22313-1450, on the date shown below.

Attorney for Applicant(s) Date 2/12/06

Respectfully submitted,

Brian D. Ogonowsky
Attorney for Applicant(s)
Reg. No. 31,988

PATENT LAW GROUP LLP
2635 N. FIRST ST.
SUITE 223
SAN JOSE, CA 95134
(408) 382-0480
FAX (408) 382-0481

OIPE JUL 21 2006 PATENT & TRADEMARK OFFICE

PTO/SB/08A (07-05)
Approved for use through 07/31/2006. OMB 0651-0031
U.S. Patent and Trademark Office; U.S. DEPARTMENT OF COMMERCE
Under the Paperwork Reduction Act of 1995, no persons are required to respond to a collection of information unless it contains a valid OMB control number.

Substitute for form 1449/PTO

INFORMATION DISCLOSURE STATEMENT BY APPLICANT

(Use as many sheets as necessary)

Sheet 1 of 22

Complete if Known	
Application Number	11/428,822
Filing Date	July 5, 2006
First Named Inventor	Samuel F. Wood
Art Unit	2614
Examiner Name	Not yet known
Attorney Docket Number	TEL-M-8801-1P-1C

U. S. PATENT DOCUMENTS

Examiner Initials*	Cite No.[1]	Document Number Number-Kind Code[2] (if known)	Publication Date MM-DD-YYYY	Name of Patentee or Applicant of Cited Document	Pages, Columns, Lines, Where Relevant Passages or Relevant Figures Appear
		US- 4100377	Jul., 1978	Flanagan	
		US- 4238851	Dec., 1980	Takahashi et al.	
		US- 4569041	Feb., 1986	Takeuchi et al.	
		US- 4608685	Aug., 1986	Jain et al.	
		US- 4630260	Dec., 1986	Toy et al.	
		US- 4630262	Dec., 1986	Callens et al.	
		US- 4661947	Apr., 1987	Lea et al.	
		US- 4674082	Jun., 1987	Flanagin et al.	
		US- 4679190	Jul., 1987	Dias et al.	
		US- 4679191	Jul., 1987	Nelson et al.	
		US- 4707831	Nov., 1987	Weir, deceased et al.	
		US- 4715026	Dec., 1987	Eberspaecher	
		US- 4723238	Feb., 1988	Isreal et al.	
		US- 4757497	Jul., 1988	Beierle et al.	
		US- 4761779	Aug., 1988	Nara et al.	
		US- 4771425	Sep., 1988	Baran et al.	
		US- 4815071	Mar., 1989	Shimizu	
		US- 4819228	Apr., 1989	Baran et al.	
		US- 4862451	Aug., 1989	Closs et al.	

FOREIGN PATENT DOCUMENTS

Examiner Initials*	Cite No.[1]	Foreign Patent Document Country Code[3]-Number[4]-Kind Code[5] (if known)	Publication Date MM-DD-YYYY	Name of Patentee or Applicant of Cited Document	Pages, Columns, Lines, Where Relevant Passages Or Relevant Figures Appear	T[6]

Examiner Signature		Date Considered	

*EXAMINER: Initial if reference considered, whether or not citation is in conformance with MPEP 609. Draw line through citation if not in conformance and not considered. Include copy of this form with next communication to applicant. [1] Applicant's unique citation designation number (optional). [2] See Kinds Codes of USPTO Patent Documents at www.uspto.gov or MPEP 901.04. [3] Enter Office that issued the document, by the two-letter code (WIPO Standard ST.3). [4] For Japanese patent documents, the indication of the year of the reign of the Emperor must precede the serial number of the patent document. [5] Kind of document by the appropriate symbols as indicated on the document under WIPO Standard ST.16 if possible. [6] Applicant is to place a check mark here if English language Translation is attached.

This collection of information is required by 37 CFR 1.97 and 1.98. The information is required to obtain or retain a benefit by the public which is to file (and by the USPTO to process) an application. Confidentiality is governed by 35 U.S.C. 122 and 37 CFR 1.14. This collection is estimated to take 2 hours to complete, including gathering, preparing, and submitting the completed application form to the USPTO. Time will vary depending upon the individual case. Any comments on the amount of time you require to complete this form and/or suggestions for reducing this burden, should be sent to the Chief Information Officer, U.S. Patent and Trademark Office, P.O. Box 1450, Alexandria, VA 22313-1450. DO NOT SEND FEES OR COMPLETED FORMS TO THIS ADDRESS. **SEND TO: Commissioner for Patents, P.O. Box 1450, Alexandria, VA 22313-1450.**

If you need assistance in completing the form, call 1-800-PTO-9199 (1-800-786-9199) and select option 2.

PTO/SB/08A (07-05)
Approved for use through 07/31/2006. OMB 0651-0031
U.S. Patent and Trademark Office; U.S. DEPARTMENT OF COMMERCE
Under the Paperwork Reduction Act of 1995, no persons are required to respond to a collection of information unless it contains a valid OMB control number.

Substitute for form 1449/PTO

INFORMATION DISCLOSURE STATEMENT BY APPLICANT

(Use as many sheets as necessary)

Sheet 2 of 22

Complete if Known	
Application Number	11/428,822
Filing Date	July 5, 2006
First Named Inventor	Samuel F. Wood
Art Unit	2614
Examiner Name	Not yet known
Attorney Docket Number	TEL-M-8801-1P-1C

U. S. PATENT DOCUMENTS

Examiner Initials*	Cite No.[1]	Document Number Number-Kind Code[2] (if known)	Publication Date MM-DD-YYYY	Name of Patentee or Applicant of Cited Document	Pages, Columns, Lines, Where Relevant Passages or Relevant Figures Appear
		US- 4866704	Sep., 1989	Bergman	
		US- 4872159	Oct., 1989	Hemmady et al.	
		US- 4872160	Oct., 1989	Hemmady et al.	
		US- 4885739	Dec., 1989	Read et al.	
		US- 4903261	Feb., 1990	Baran et al.	
		US- 4926416	May., 1990	Weik	
		US- 4932022	Jun., 1990	Keeney et al.	
		US- 4933931	Jun., 1990	Kokubo	
		US- 4953158	Aug., 1990	Schreur	
		US- 4958341	Sep., 1990	Hemmady et al.	
		US- 4962497	Oct., 1990	Ferenc et al.	
		US- 4969184	Nov., 1990	Gordon et al.	
		US- 4970721	Nov., 1990	Aczel et al.	
		US- 4975695	Dec., 1990	Almond et al.	
		US- 4996685	Feb., 1991	Farese et al.	
		US- 5008929	Apr., 1991	Olsen et al.	
		US- 5014266	May., 1991	Bales et al.	
		US- 5018136	May., 1991	Gollub	
		US- 5020058	May., 1991	Holden et al.	

FOREIGN PATENT DOCUMENTS

Examiner Initials*	Cite No.[1]	Foreign Patent Document Country Code[3]-Number[4]-Kind Code[5] (if known)	Publication Date MM-DD-YYYY	Name of Patentee or Applicant of Cited Document	Pages, Columns, Lines, Where Relevant Passages Or Relevant Figures Appear	T[6]

Examiner Signature		Date Considered	

*EXAMINER: Initial if reference considered, whether or not citation is in conformance with MPEP 609. Draw line through citation if not in conformance and not considered. Include copy of this form with next communication to applicant. [1] Applicant's unique citation designation number (optional). [2] See Kinds Codes of USPTO Patent Documents at www.uspto.gov or MPEP 901.04. [3] Enter Office that issued the document, by the two-letter code (WIPO Standard ST.3). [4] For Japanese patent documents, the indication of the year of the reign of the Emperor must precede the serial number of the patent document. [5] Kind of document by the appropriate symbols as indicated on the document under WIPO Standard ST.16 if possible. [6] Applicant is to place a check mark here if English language Translation is attached.

This collection of information is required by 37 CFR 1.97 and 1.98. The information is required to obtain or retain a benefit by the public which is to file (and by the USPTO to process) an application. Confidentiality is governed by 35 U.S.C. 122 and 37 CFR 1.14. This collection is estimated to take 2 hours to complete, including gathering, preparing, and submitting the completed application form to the USPTO. Time will vary depending upon the individual case. Any comments on the amount of time you require to complete this form and/or suggestions for reducing this burden, should be sent to the Chief Information Officer, U.S. Patent and Trademark Office, P.O. Box 1450, Alexandria, VA 22313-1450. DO NOT SEND FEES OR COMPLETED FORMS TO THIS ADDRESS. **SEND TO: Commissioner for Patents, P.O. Box 1450, Alexandria, VA 22313-1450.**

If you need assistance in completing the form, call 1-800-PTO-9199 (1-800-786-9199) and select option 2.

PTO/SB/08A (07-05)
Approved for use through 07/31/2006. OMB 0651-0031
U.S. Patent and Trademark Office; U.S. DEPARTMENT OF COMMERCE
Under the Paperwork Reduction Act of 1995, no persons are required to respond to a collection of information unless it contains a valid OMB control number.

Substitute for form 1449/PTO

INFORMATION DISCLOSURE STATEMENT BY APPLICANT

(Use as many sheets as necessary)

Sheet 3 of 22

Complete if Known	
Application Number	11/428,822
Filing Date	July 5, 2006
First Named Inventor	Samuel F. Wood
Art Unit	2614
Examiner Name	Not yet known
Attorney Docket Number	TEL-M-8801-1P-1C

U. S. PATENT DOCUMENTS

Examiner Initials*	Cite No.[1]	Document Number Number-Kind Code[2] (if known)	Publication Date MM-DD-YYYY	Name of Patentee or Applicant of Cited Document	Pages, Columns, Lines, Where Relevant Passages or Relevant Figures Appear
		US- 5022071	Jun., 1991	Mozer et al.	
		US- 5048081	Sep., 1991	Gavaras et al.	
		US- 5051983	Sep., 1991	Kammerl	
		US- 5093827	Mar., 1992	Franklin et al.	
		US- 5115431	May., 1992	Williams et al.	
		US- 5150357	Sep., 1992	Hopner et al.	
		US- 5157662	Oct., 1992	Tadamura et al.	
		US- 5197067	Mar., 1993	Fujimoto et al	
		US- 5208806	May., 1993	Hasegawa	
		US- 5218602	Jun., 1993	Grant et al.	
		US- 5231633	Jul., 1993	Hluchyj et al.	
		US- 4926416	May., 1990	Weik	
		US- 4932022	Jun., 1990	Keeney et al.	
		US- 4933931	Jun., 1990	Kokubo	
		US- 5241588	Aug., 1993	Babson, III et al.	
		US- 5247571	Sep., 1993	Kay et al.	
		US- 5268900	Dec., 1993	Hluchyj et al.	
		US- 5274635	Dec., 1993	Rahman et al.	
		US- 5291489	Mar., 1994	Morgan et al.	

FOREIGN PATENT DOCUMENTS

Examiner Initials*	Cite No.[1]	Foreign Patent Document Country Code[3]-Number[4]-Kind Code[5] (if known)	Publication Date MM-DD-YYYY	Name of Patentee or Applicant of Cited Document	Pages, Columns, Lines, Where Relevant Passages Or Relevant Figures Appear	T[6]

Examiner Signature		Date Considered	

*EXAMINER: Initial if reference considered, whether or not citation is in conformance with MPEP 609. Draw line through citation if not in conformance and not considered. Include copy of this form with next communication to applicant. [1] Applicant's unique citation designation number (optional). [2] See Kinds Codes of USPTO Patent Documents at www.uspto.gov or MPEP 901.04. [3] Enter Office that issued the document, by the two-letter code (WIPO Standard ST.3). [4] For Japanese patent documents, the indication of the year of the reign of the Emperor must precede the serial number of the patent document. [5] Kind of document by the appropriate symbols as indicated on the document under WIPO Standard ST.16 if possible. [6] Applicant is to place a check mark here if English language Translation is attached.

This collection of information is required by 37 CFR 1.97 and 1.98. The information is required to obtain or retain a benefit by the public which is to file (and by the USPTO to process) an application. Confidentiality is governed by 35 U.S.C. 122 and 37 CFR 1.14. This collection is estimated to take 2 hours to complete, including gathering, preparing, and submitting the completed application form to the USPTO. Time will vary depending upon the individual case. Any comments on the amount of time you require to complete this form and/or suggestions for reducing this burden, should be sent to the Chief Information Officer, U.S. Patent and Trademark Office, P.O. Box 1450, Alexandria, VA 22313-1450. DO NOT SEND FEES OR COMPLETED FORMS TO THIS ADDRESS. SEND TO: **Commissioner for Patents, P.O. Box 1450, Alexandria, VA 22313-1450.**

If you need assistance in completing the form, call 1-800-PTO-9199 (1-800-786-9199) and select option 2.

PTO/SB/08A (07-05)
Approved for use through 07/31/2006. OMB 0651-0031
U.S. Patent and Trademark Office; U.S. DEPARTMENT OF COMMERCE
Under the Paperwork Reduction Act of 1995, no persons are required to respond to a collection of information unless it contains a valid OMB control number.

Substitute for form 1449/PTO

INFORMATION DISCLOSURE STATEMENT BY APPLICANT

(Use as many sheets as necessary)

Sheet 4 of 22

Complete if Known	
Application Number	11/428,822
Filing Date	July 5, 2006
First Named Inventor	Samuel F. Wood
Art Unit	2614
Examiner Name	Not yet known
Attorney Docket Number	TEL-M-8801-1P-1C

U. S. PATENT DOCUMENTS

Examiner Initials*	Cite No.[1]	Document Number Number-Kind Code[2] (if known)	Publication Date MM-DD-YYYY	Name of Patentee or Applicant of Cited Document	Pages, Columns, Lines, Where Relevant Passages or Relevant Figures Appear
		US- 5301189	Apr., 1994	Schmidt et al.	
		US- 5305308	Apr., 1994	English et al.	
		US- 5327428	Jul., 1994	Van As et al.	
		US- 5341374	Aug., 1994	Lewen et al.	
		US- 5351276	Sep., 1994	Doll, Jr. et al.	
		US- 5351286	Sep., 1994	Nici	
		US- 5353283	Oct., 1994	Tsuchiya	
		US- 5359598	Oct., 1994	Steagall et al.	
		US- 5365521	Nov., 1994	Ohnishi et al.	
		US- 5379293	Jan., 1995	Kanno et al.	
		US- 5381405	Jan., 1995	Daugherty et al.	
		US- 5381466	Jan., 1995	Shibayama et al.	
		US- 5383183	Jan., 1995	Yoshida	
		US- 5384840	Jan., 1995	Blatchford et al.	
		US- 5390184	Feb., 1995	Morris	
		US- 5396491	Mar., 1995	Newman	
		US- 5420858	May., 1995	Marshall et al.	
		US- 5422882	Jun., 1995	Hiller et al.	
		US- 5423003	Jun., 1995	Berteau	

FOREIGN PATENT DOCUMENTS

Examiner Initials*	Cite No.[1]	Foreign Patent Document Country Code[3]-Number[4]-Kind Code[5] (if known)	Publication Date MM-DD-YYYY	Name of Patentee or Applicant of Cited Document	Pages, Columns, Lines, Where Relevant Passages Or Relevant Figures Appear	T[6]

Examiner Signature		Date Considered	

*EXAMINER: Initial if reference considered, whether or not citation is in conformance with MPEP 609. Draw line through citation if not in conformance and not considered. Include copy of this form with next communication to applicant. [1] Applicant's unique citation designation number (optional). [2] See Kinds Codes of USPTO Patent Documents at www.uspto.gov or MPEP 901.04. [3] Enter Office that issued the document, by the two-letter code (WIPO Standard ST.3). [4] For Japanese patent documents, the indication of the year of the reign of the Emperor must precede the serial number of the patent document. [5] Kind of document by the appropriate symbols as indicated on the document under WIPO Standard ST.16 if possible. [6] Applicant is to place a check mark here if English language Translation is attached.

This collection of information is required by 37 CFR 1.97 and 1.98. The information is required to obtain or retain a benefit by the public which is to file (and by the USPTO to process) an application. Confidentiality is governed by 35 U.S.C. 122 and 37 CFR 1.14. This collection is estimated to take 2 hours to complete, including gathering, preparing, and submitting the completed application form to the USPTO. Time will vary depending upon the individual case. Any comments on the amount of time you require to complete this form and/or suggestions for reducing this burden, should be sent to the Chief Information Officer, U.S. Patent and Trademark Office, P.O. Box 1450, Alexandria, VA 22313-1450. DO NOT SEND FEES OR COMPLETED FORMS TO THIS ADDRESS. **SEND TO: Commissioner for Patents, P.O. Box 1450, Alexandria, VA 22313-1450.**

If you need assistance in completing the form, call 1-800-PTO-9199 (1-800-786-9199) and select option 2.

PTO/SB/08A (07-05)
Approved for use through 07/31/2006. OMB 0651-0031
U.S. Patent and Trademark Office; U.S. DEPARTMENT OF COMMERCE
Under the Paperwork Reduction Act of 1995, no persons are required to respond to a collection of information unless it contains a valid OMB control number.

Substitute for form 1449/PTO

INFORMATION DISCLOSURE STATEMENT BY APPLICANT

(Use as many sheets as necessary)

Sheet 5 of 22

Complete if Known	
Application Number	11/428,822
Filing Date	July 5, 2006
First Named Inventor	Samuel F. Wood
Art Unit	2614
Examiner Name	Not yet known
Attorney Docket Number	TEL-M-8801-1P-1C

U. S. PATENT DOCUMENTS

Examiner Initials*	Cite No.[1]	Document Number Number-Kind Code[2] (if known)	Publication Date MM-DD-YYYY	Name of Patentee or Applicant of Cited Document	Pages, Columns, Lines, Where Relevant Passages or Relevant Figures Appear
		US- 5426636	Jun., 1995	Hiller et al.	
		US- 5428607	Jun., 1995	Hiller et al.	
		US- 5428616	Jun., 1995	Field et al.	
		US- 5430719	Jul., 1995	Weisser, Jr.	
		US- 5434913	Jul., 1995	Tung et al.	
		US- 5436898	Jul., 1995	Bowen et al.	
		US- 5438614	Aug., 1995	Rozman et al.	
		US- 5444709	Aug., 1995	Riddle	
		US- 5452289	Sep., 1995	Sharma et al.	
		US- 5453986	Sep., 1995	Davis et al.	
		US- 5457684	Oct., 1995	Bharucha et al.	
		US- 5471470	Nov., 1995	Sharma et al.	
		US- 5479411	Dec., 1995	Klein	
		US- 5485457	Jan., 1996	Aramaki	
		US- 5521914	May., 1996	Mavraganis et al.	
		US- 5526353	Jun., 1996	Henley et al.	
		US- 5537403	Jul., 1996	Cloonan et al.	
		US- 5541917	Jul., 1996	Farris	
		US- 5544161	Aug., 1996	Bigham et al.	

FOREIGN PATENT DOCUMENTS

Examiner Initials*	Cite No.[1]	Foreign Patent Document Country Code[3]-Number[4]-Kind Code[5] (if known)	Publication Date MM-DD-YYYY	Name of Patentee or Applicant of Cited Document	Pages, Columns, Lines, Where Relevant Passages Or Relevant Figures Appear	T[6]

Examiner Signature		Date Considered	

*EXAMINER: Initial if reference considered, whether or not citation is in conformance with MPEP 609. Draw line through citation if not in conformance and not considered. Include copy of this form with next communication to applicant. [1] Applicant's unique citation designation number (optional). [2] See Kinds Codes of USPTO Patent Documents at www.uspto.gov or MPEP 901.04. [3] Enter Office that issued the document, by the two-letter code (WIPO Standard ST.3). [4] For Japanese patent documents, the indication of the year of the reign of the Emperor must precede the serial number of the patent document. [5] Kind of document by the appropriate symbols as indicated on the document under WIPO Standard ST.16 if possible. [6] Applicant is to place a check mark here if English language Translation is attached.

This collection of information is required by 37 CFR 1.97 and 1.98. The information is required to obtain or retain a benefit by the public which is to file (and by the USPTO to process) an application. Confidentiality is governed by 35 U.S.C. 122 and 37 CFR 1.14. This collection is estimated to take 2 hours to complete, including gathering, preparing, and submitting the completed application form to the USPTO. Time will vary depending upon the individual case. Any comments on the amount of time you require to complete this form and/or suggestions for reducing this burden, should be sent to the Chief Information Officer, U.S. Patent and Trademark Office, P.O. Box 1450, Alexandria, VA 22313-1450. DO NOT SEND FEES OR COMPLETED FORMS TO THIS ADDRESS. **SEND TO: Commissioner for Patents, P.O. Box 1450, Alexandria, VA 22313-1450.**

If you need assistance in completing the form, call 1-800-PTO-9199 (1-800-786-9199) and select option 2.

PTO/SB/08A (07-05)
Approved for use through 07/31/2006. OMB 0651-0031
U.S. Patent and Trademark Office; U.S. DEPARTMENT OF COMMERCE
Under the Paperwork Reduction Act of 1995, no persons are required to respond to a collection of information unless it contains a valid OMB control number.

Substitute for form 1449/PTO

INFORMATION DISCLOSURE STATEMENT BY APPLICANT

(Use as many sheets as necessary)

Sheet 6 of 22

Complete if Known	
Application Number	11/428,822
Filing Date	July 5, 2006
First Named Inventor	Samuel F. Wood
Art Unit	2614
Examiner Name	Not yet known
Attorney Docket Number	TEL-M-8801-1P-1C

U. S. PATENT DOCUMENTS

Examiner Initials*	Cite No.[1]	Document Number Number-Kind Code[2] (if known)	Publication Date MM-DD-YYYY	Name of Patentee or Applicant of Cited Document	Pages, Columns, Lines, Where Relevant Passages or Relevant Figures Appear
		US- 5544163	Aug., 1996	Madonna	
		US- 5544164	Aug., 1996	Baran	
		US- 5544168	Aug., 1996	Jeffrey et al.	
		US- 5553063	Sep., 1996	Dickson	
		US- 5568475	Oct., 1996	Doshi et al.	
		US- 5570355	Oct., 1996	Dail et al.	
		US- 5572583	Nov., 1996	Wheeler, Jr. et al.	
		US- 5577038	Nov., 1996	Miyahara	
		US- 5577041	Nov., 1996	Sharma et al.	
		US- 5579308	Nov., 1996	Humpleman	
		US- 5590181	Dec., 1996	Hogan et al.	
		US- 5592477	Jan., 1997	Farris et al.	
		US- 5592538	Jan., 1997	Kosowsky et al.	
		US- 5594732	Jan., 1997	Bell et al.	
		US- 5600643	Feb., 1997	Robrock, II	
		US- 5600649	Feb., 1997	Sharma et al.	
		US- 5602991	Feb., 1997	Berteau	
		US- 5604737	Feb., 1997	Iwami et al.	
		US- 5608786	Mar., 1997	Gordon	

FOREIGN PATENT DOCUMENTS

Examiner Initials*	Cite No.[1]	Foreign Patent Document Country Code[3]-Number[4]-Kind Code[5] (if known)	Publication Date MM-DD-YYYY	Name of Patentee or Applicant of Cited Document	Pages, Columns, Lines, Where Relevant Passages Or Relevant Figures Appear	T[6]

Examiner Signature		Date Considered	

*EXAMINER: Initial if reference considered, whether or not citation is in conformance with MPEP 609. Draw line through citation if not in conformance and not considered. Include copy of this form with next communication to applicant. [1] Applicant's unique citation designation number (optional). [2] See Kinds Codes of USPTO Patent Documents at www.uspto.gov or MPEP 901.04. [3] Enter Office that issued the document, by the two-letter code (WIPO Standard ST.3). [4] For Japanese patent documents, the indication of the year of the reign of the Emperor must precede the serial number of the patent document. [5] Kind of document by the appropriate symbols as indicated on the document under WIPO Standard ST.16 if possible. [6] Applicant is to place a check mark here if English language Translation is attached.

This collection of information is required by 37 CFR 1.97 and 1.98. The information is required to obtain or retain a benefit by the public which is to file (and by the USPTO to process) an application. Confidentiality is governed by 35 U.S.C. 122 and 37 CFR 1.14. This collection is estimated to take 2 hours to complete, including gathering, preparing, and submitting the completed application form to the USPTO. Time will vary depending upon the individual case. Any comments on the amount of time you require to complete this form and/or suggestions for reducing this burden, should be sent to the Chief Information Officer, U.S. Patent and Trademark Office, P.O. Box 1450, Alexandria, VA 22313-1450. DO NOT SEND FEES OR COMPLETED FORMS TO THIS ADDRESS. **SEND TO: Commissioner for Patents, P.O. Box 1450, Alexandria, VA 22313-1450.**

If you need assistance in completing the form, call 1-800-PTO-9199 (1-800-786-9199) and select option 2.

PTO/SB/08A (07-05)
Approved for use through 07/31/2006. OMB 0651-0031
U.S. Patent and Trademark Office; U.S. DEPARTMENT OF COMMERCE
Under the Paperwork Reduction Act of 1995, no persons are required to respond to a collection of information unless it contains a valid OMB control number.

Substitute for form 1449/PTO

INFORMATION DISCLOSURE STATEMENT BY APPLICANT

(Use as many sheets as necessary)

Sheet 7 of 22

Complete if Known	
Application Number	11/428,822
Filing Date	July 5, 2006
First Named Inventor	Samuel F. Wood
Art Unit	2614
Examiner Name	Not yet known
Attorney Docket Number	TEL-M-8801-1P-1C

U. S. PATENT DOCUMENTS

Examiner Initials*	Cite No.[1]	Document Number Number-Kind Code[2] (if known)	Publication Date MM-DD-YYYY	Name of Patentee or Applicant of Cited Document	Pages, Columns, Lines, Where Relevant Passages or Relevant Figures Appear
		US- 5613069	Mar., 1997	Walker	
		US- H1641	Apr., 1997	Sharman	
		US- 5621727	Apr., 1997	Vaudreuil	
		US- 5625677	Apr., 1997	Feiertag et al.	
		US- 5631897	May., 1997	Pacheco et al.	
		US- 5640446	Jun., 1997	Everett et al.	
		US- 5650999	Jul., 1997	Dickson	
		US- 5654957	Aug., 1997	Koyama	
		US- 5659541	Aug., 1997	Chan	
		US- 5659542	Aug., 1997	Bell et al.	
		US- 5680437	Oct., 1997	Segal	
		US- 5684799	Nov., 1997	Bigham et al.	
		US- 5689553	Nov., 1997	Ahuja et al.	
		US- 5692126	Nov., 1997	Templeton et al.	
		US- 5701301	Dec., 1997	Weisser, Jr.	
		US- 5706286	Jan., 1998	Reiman et al.	
		US- 5710769	Jan., 1998	Anderson et al.	
		US- 5712903	Jan., 1998	Bartholomew et al.	
		US- 5712908	Jan., 1998	Brinkman et al.	

FOREIGN PATENT DOCUMENTS

Examiner Initials*	Cite No.[1]	Foreign Patent Document Country Code[3]-Number[4]-Kind Code[5] (if known)	Publication Date MM-DD-YYYY	Name of Patentee or Applicant of Cited Document	Pages, Columns, Lines, Where Relevant Passages Or Relevant Figures Appear	T[6]

Examiner Signature		Date Considered	

*EXAMINER: Initial if reference considered, whether or not citation is in conformance with MPEP 609. Draw line through citation if not in conformance and not considered. Include copy of this form with next communication to applicant. [1] Applicant's unique citation designation number (optional). [2] See Kinds Codes of USPTO Patent Documents at www.uspto.gov or MPEP 901.04. [3] Enter Office that issued the document, by the two-letter code (WIPO Standard ST.3). [4] For Japanese patent documents, the indication of the year of the reign of the Emperor must precede the serial number of the patent document. [5] Kind of document by the appropriate symbols as indicated on the document under WIPO Standard ST.16 if possible. [6] Applicant is to place a check mark here if English language Translation is attached.

This collection of information is required by 37 CFR 1.97 and 1.98. The information is required to obtain or retain a benefit by the public which is to file (and by the USPTO to process) an application. Confidentiality is governed by 35 U.S.C. 122 and 37 CFR 1.14. This collection is estimated to take 2 hours to complete, including gathering, preparing, and submitting the completed application form to the USPTO. Time will vary depending upon the individual case. Any comments on the amount of time you require to complete this form and/or suggestions for reducing this burden, should be sent to the Chief Information Officer, U.S. Patent and Trademark Office, P.O. Box 1450, Alexandria, VA 22313-1450. DO NOT SEND FEES OR COMPLETED FORMS TO THIS ADDRESS. **SEND TO: Commissioner for Patents, P.O. Box 1450, Alexandria, VA 22313-1450.**

If you need assistance in completing the form, call 1-800-PTO-9199 (1-800-786-9199) and select option 2.

PTO/SB/08A (07-05)
Approved for use through 07/31/2006. OMB 0651-0031
U.S. Patent and Trademark Office; U.S. DEPARTMENT OF COMMERCE
Under the Paperwork Reduction Act of 1995, no persons are required to respond to a collection of information unless it contains a valid OMB control number.

Substitute for form 1449/PTO

INFORMATION DISCLOSURE STATEMENT BY APPLICANT

(Use as many sheets as necessary)

Sheet 8 of 22

Complete if Known	
Application Number	11/428,822
Filing Date	July 5, 2006
First Named Inventor	Samuel F. Wood
Art Unit	2614
Examiner Name	Not yet known
Attorney Docket Number	TEL-M-8801-1P-1C

U. S. PATENT DOCUMENTS

Examiner Initials*	Cite No.[1]	Document Number Number-Kind Code[2] (if known)	Publication Date MM-DD-YYYY	Name of Patentee or Applicant of Cited Document	Pages, Columns, Lines, Where Relevant Passages or Relevant Figures Appear
		US- 5724412	Mar., 1998	Srinivasan	
		US- 5729544	Mar., 1998	Lev et al.	
		US- 5732078	Mar., 1998	Arango	
		US- 5737320	Apr., 1998	Madonna	
		US- 5737331	Apr., 1998	Hoppal et al.	
		US- 5737333	Apr., 1998	Civanlar et al.	
		US- 5740164	Apr., 1998	Liron	
		US- 5740231	Apr., 1998	Cohn et al.	
		US- 5742596	Apr., 1998	Baratz et al.	
		US- 5751706	May., 1998	Land et al.	
		US- 5751968	May., 1998	Cohen	
		US- 5754641	May., 1998	Voit et al.	
		US- 5764628	Jun., 1998	Davis et al.	
		US- 5764736	Jun., 1998	Shachar et al.	
		US- 5764750	Jun., 1998	Chau et al.	
		US- 5764756	Jun., 1998	Onweller	
		US- 5777991	Jul., 1998	Adachi et al.	
		US- 5790538	Aug., 1998	Sugar	
		US- 5793762	Aug., 1998	Penners et al.	

FOREIGN PATENT DOCUMENTS

Examiner Initials*	Cite No.[1]	Foreign Patent Document Country Code[3]-Number[4]-Kind Code[5] (if known)	Publication Date MM-DD-YYYY	Name of Patentee or Applicant of Cited Document	Pages, Columns, Lines, Where Relevant Passages Or Relevant Figures Appear	T[6]

Examiner Signature		Date Considered	

*EXAMINER: Initial if reference considered, whether or not citation is in conformance with MPEP 609. Draw line through citation if not in conformance and not considered. Include copy of this form with next communication to applicant. [1] Applicant's unique citation designation number (optional). [2] See Kinds Codes of USPTO Patent Documents at www.uspto.gov or MPEP 901.04. [3] Enter Office that issued the document, by the two-letter code (WIPO Standard ST.3). [4] For Japanese patent documents, the indication of the year of the reign of the Emperor must precede the serial number of the patent document. [5] Kind of document by the appropriate symbols as indicated on the document under WIPO Standard ST.16 if possible. [6] Applicant is to place a check mark here if English language Translation is attached.

This collection of information is required by 37 CFR 1.97 and 1.98. The information is required to obtain or retain a benefit by the public which is to file (and by the USPTO to process) an application. Confidentiality is governed by 35 U.S.C. 122 and 37 CFR 1.14. This collection is estimated to take 2 hours to complete, including gathering, preparing, and submitting the completed application form to the USPTO. Time will vary depending upon the individual case. Any comments on the amount of time you require to complete this form and/or suggestions for reducing this burden, should be sent to the Chief Information Officer, U.S. Patent and Trademark Office, P.O. Box 1450, Alexandria, VA 22313-1450. DO NOT SEND FEES OR COMPLETED FORMS TO THIS ADDRESS. **SEND TO: Commissioner for Patents, P.O. Box 1450, Alexandria, VA 22313-1450.**

If you need assistance in completing the form, call 1-800-PTO-9199 (1-800-786-9199) and select option 2.

PTO/SB/08A (07-05)
Approved for use through 07/31/2006. OMB 0651-0031
U.S. Patent and Trademark Office; U.S. DEPARTMENT OF COMMERCE
Under the Paperwork Reduction Act of 1995, no persons are required to respond to a collection of information unless it contains a valid OMB control number.

Substitute for form 1449/PTO

INFORMATION DISCLOSURE STATEMENT BY APPLICANT

(Use as many sheets as necessary)

Sheet 9 of 22

Complete if Known	
Application Number	11/428,822
Filing Date	July 5, 2006
First Named Inventor	Samuel F. Wood
Art Unit	2614
Examiner Name	Not yet known
Attorney Docket Number	TEL-M-8801-1P-1C

U. S. PATENT DOCUMENTS

Examiner Initials*	Cite No.[1]	Document Number Number-Kind Code[2] *(if known)*	Publication Date MM-DD-YYYY	Name of Patentee or Applicant of Cited Document	Pages, Columns, Lines, Where Relevant Passages or Relevant Figures Appear
		US- 5793771	Aug., 1998	Darland et al.	
		US- 5799154	Aug., 1998	Kuriyan	
		US- 5805587	Sep., 1998	Norris et al.	
		US- 5805588	Sep., 1998	Petersen	
		US- 5809022	Sep., 1998	Byers et al.	
		US- 5809128	Sep., 1998	McMullin	
		US- 5812534	Sep., 1998	Davis et al.	
		US- 5815505	Sep., 1998	Mills	
		US- 5818912	Oct., 1998	Hammond	
		US- 5825771	Oct., 1998	Cohen et al.	
		US- 5828666	Oct., 1998	Focsaneanu et al.	
		US- 5838665	Nov., 1998	Kahn et al.	
		US- 5867494	Feb., 1999	Krishnaswamy et al.	
		US- 5867495	Feb., 1999	Elliott et al.	
		US- 5881060	Mar., 1999	Morrow et al.	
		US- 5881131	Mar., 1999	Farris et al.	
		US- 5889774	Mar., 1999	Mirashrafi et al.	
		US- 5915008	Jun., 1999	Dulman	
		US- 5922047	Jul., 1999	Newlin et al.	

FOREIGN PATENT DOCUMENTS

Examiner Initials*	Cite No.[1]	Foreign Patent Document Country Code[3]-Number[4]-Kind Code[5] *(if known)*	Publication Date MM-DD-YYYY	Name of Patentee or Applicant of Cited Document	Pages, Columns, Lines, Where Relevant Passages Or Relevant Figures Appear	T[6]

Examiner Signature		Date Considered	

*EXAMINER: Initial if reference considered, whether or not citation is in conformance with MPEP 609. Draw line through citation if not in conformance and not considered. Include copy of this form with next communication to applicant. [1] Applicant's unique citation designation number (optional). [2] See Kinds Codes of USPTO Patent Documents at www.uspto.gov or MPEP 901.04. [3] Enter Office that issued the document, by the two-letter code (WIPO Standard ST.3). [4] For Japanese patent documents, the indication of the year of the reign of the Emperor must precede the serial number of the patent document. [5] Kind of document by the appropriate symbols as indicated on the document under WIPO Standard ST.16 if possible. [6] Applicant is to place a check mark here if English language Translation is attached.

This collection of information is required by 37 CFR 1.97 and 1.98. The information is required to obtain or retain a benefit by the public which is to file (and by the USPTO to process) an application. Confidentiality is governed by 35 U.S.C. 122 and 37 CFR 1.14. This collection is estimated to take 2 hours to complete, including gathering, preparing, and submitting the completed application form to the USPTO. Time will vary depending upon the individual case. Any comments on the amount of time you require to complete this form and/or suggestions for reducing this burden, should be sent to the Chief Information Officer, U.S. Patent and Trademark Office, P.O. Box 1450, Alexandria, VA 22313-1450. DO NOT SEND FEES OR COMPLETED FORMS TO THIS ADDRESS. **SEND TO: Commissioner for Patents, P.O. Box 1450, Alexandria, VA 22313-1450.**

If you need assistance in completing the form, call 1-800-PTO-9199 (1-800-786-9199) and select option 2.

PTO/SB/08A (07-05)
Approved for use through 07/31/2006. OMB 0651-0031
U.S. Patent and Trademark Office; U.S. DEPARTMENT OF COMMERCE
Under the Paperwork Reduction Act of 1995, no persons are required to respond to a collection of information unless it contains a valid OMB control number.

Substitute for form 1449/PTO

INFORMATION DISCLOSURE STATEMENT BY APPLICANT

(Use as many sheets as necessary)

Sheet 10 of 22

Complete if Known	
Application Number	11/428,822
Filing Date	July 5, 2006
First Named Inventor	Samuel F. Wood
Art Unit	2614
Examiner Name	Not yet known
Attorney Docket Number	TEL-M-8801-1P-1C

U. S. PATENT DOCUMENTS

Examiner Initials*	Cite No.[1]	Document Number Number-Kind Code[2] (if known)	Publication Date MM-DD-YYYY	Name of Patentee or Applicant of Cited Document	Pages, Columns, Lines, Where Relevant Passages or Relevant Figures Appear
		US- 5933490	Aug., 1999	White et al.	
		US- 5954799	Sep., 1999	Goheen et al.	
		US- 5963551	Oct., 1999	Minko	
		US- 5991291	Nov., 1999	Asai et al.	
		US- 5999525	Dec., 1999	Krishnaswamy et al.	
		US- 6009469	Dec., 1999	Mattaway et al.	
		US- 6026083	Feb., 2000	Albrow et al.	
		US- 6069890	May., 2000	White et al.	
		US- 6134235	Oct., 2000	Goldman et al.	
		US- 6278707	Aug., 2001	MacMillan et al.	
		US- 6324183	Nov., 2001	Miller et al.	
		US- 6327258	Dec., 2001	Deschaine et al.	
		US- 6339594	Jan., 2002	Civanlar et al.	
		US- 5946684	Aug., 1999	Lund	
		US- 6094478	Jul., 2000	Shepherd et al.	
		US- 6028917	Feb., 2000	Creamer et al.	
		US- 6104800	Aug., 2000	Benson	
		US- 6078581	Jun., 2000	Shtivelman et al.	
		US- 6259692	Jul., 2001	Shtivelman et al.	

FOREIGN PATENT DOCUMENTS

Examiner Initials*	Cite No.[1]	Foreign Patent Document Country Code[3]-Number[4]-Kind Code[5] (if known)	Publication Date MM-DD-YYYY	Name of Patentee or Applicant of Cited Document	Pages, Columns, Lines, Where Relevant Passages Or Relevant Figures Appear	T[6]

Examiner Signature		Date Considered	

*EXAMINER: Initial if reference considered, whether or not citation is in conformance with MPEP 609. Draw line through citation if not in conformance and not considered. Include copy of this form with next communication to applicant. [1] Applicant's unique citation designation number (optional). [2] See Kinds Codes of USPTO Patent Documents at www.uspto.gov or MPEP 901.04. [3] Enter Office that issued the document, by the two-letter code (WIPO Standard ST.3). [4] For Japanese patent documents, the indication of the year of the reign of the Emperor must precede the serial number of the patent document. [5]Kind of document by the appropriate symbols as indicated on the document under WIPO Standard ST.16 if possible. [6] Applicant is to place a check mark here if English language Translation is attached.

This collection of information is required by 37 CFR 1.97 and 1.98. The information is required to obtain or retain a benefit by the public which is to file (and by the USPTO to process) an application. Confidentiality is governed by 35 U.S.C. 122 and 37 CFR 1.14. This collection is estimated to take 2 hours to complete, including gathering, preparing, and submitting the completed application form to the USPTO. Time will vary depending upon the individual case. Any comments on the amount of time you require to complete this form and/or suggestions for reducing this burden, should be sent to the Chief Information Officer, U.S. Patent and Trademark Office, P.O. Box 1450, Alexandria, VA 22313-1450. DO NOT SEND FEES OR COMPLETED FORMS TO THIS ADDRESS. SEND TO: **Commissioner for Patents, P.O. Box 1450, Alexandria, VA 22313-1450.**

If you need assistance in completing the form, call 1-800-PTO-9199 (1-800-786-9199) and select option 2.

PTO/SB/08A (07-05)
Approved for use through 07/31/2006. OMB 0651-0031
U.S. Patent and Trademark Office; U.S. DEPARTMENT OF COMMERCE
Under the Paperwork Reduction Act of 1995, no persons are required to respond to a collection of information unless it contains a valid OMB control number.

Substitute for form 1449/PTO

INFORMATION DISCLOSURE STATEMENT BY APPLICANT

(Use as many sheets as necessary)

Sheet 11 of 22

Complete if Known	
Application Number	11/428,822
Filing Date	July 5, 2006
First Named Inventor	Samuel F. Wood
Art Unit	2614
Examiner Name	Not yet known
Attorney Docket Number	TEL-M-8801-1P-1C

U. S. PATENT DOCUMENTS

Examiner Initials*	Cite No.[1]	Document Number Number-Kind Code[2] (if known)	Publication Date MM-DD-YYYY	Name of Patentee or Applicant of Cited Document	Pages, Columns, Lines, Where Relevant Passages or Relevant Figures Appear
		US- 6014437	Jan., 2000	Acker et al.	
		US- 5799072	Aug., 1998	Vulcan et al.	
		US- 5946386	Aug., 1999	Rogers et al.	
		US- 6005870	Dec., 1999	Leung et al.	
		US- 6161128	Dec. 2000	Smyk	
		US- 6614781	Sep., 2003	Elliott et al.	
		US-			
		US-			
		US-			
		US-			
		US-			
		US-			
		US-			
		US-			
		US-			
		US-			
		US-			
		US-			
		US-			

FOREIGN PATENT DOCUMENTS

Examiner Initials*	Cite No.[1]	Foreign Patent Document Country Code[3]-Number[4]-Kind Code[5] (if known)	Publication Date MM-DD-YYYY	Name of Patentee or Applicant of Cited Document	Pages, Columns, Lines, Where Relevant Passages Or Relevant Figures Appear	T[6]

Examiner Signature		Date Considered	

*EXAMINER: Initial if reference considered, whether or not citation is in conformance with MPEP 609. Draw line through citation if not in conformance and not considered. Include copy of this form with next communication to applicant. [1] Applicant's unique citation designation number (optional). [2] See Kinds Codes of USPTO Patent Documents at www.uspto.gov or MPEP 901.04. [3] Enter Office that issued the document, by the two-letter code (WIPO Standard ST.3). [4] For Japanese patent documents, the indication of the year of the reign of the Emperor must precede the serial number of the patent document. [5] Kind of document by the appropriate symbols as indicated on the document under WIPO Standard ST.16 if possible. [6] Applicant is to place a check mark here if English language Translation is attached.

This collection of information is required by 37 CFR 1.97 and 1.98. The information is required to obtain or retain a benefit by the public which is to file (and by the USPTO to process) an application. Confidentiality is governed by 35 U.S.C. 122 and 37 CFR 1.14. This collection is estimated to take 2 hours to complete, including gathering, preparing, and submitting the completed application form to the USPTO. Time will vary depending upon the individual case. Any comments on the amount of time you require to complete this form and/or suggestions for reducing this burden, should be sent to the Chief Information Officer, U.S. Patent and Trademark Office, P.O. Box 1450, Alexandria, VA 22313-1450. DO NOT SEND FEES OR COMPLETED FORMS TO THIS ADDRESS. **SEND TO: Commissioner for Patents, P.O. Box 1450, Alexandria, VA 22313-1450.**

If you need assistance in completing the form, call 1-800-PTO-9199 (1-800-786-9199) and select option 2.

PTO/SB/08A (07-05)
Approved for use through 07/31/2006. OMB 0651-0031
U.S. Patent and Trademark Office; U.S. DEPARTMENT OF COMMERCE
Under the Paperwork Reduction Act of 1995, no persons are required to respond to a collection of information unless it contains a valid OMB control number.

Substitute for form 1449/PTO

INFORMATION DISCLOSURE STATEMENT BY APPLICANT

(Use as many sheets as necessary)

Sheet 12 of 22

Complete if Known	
Application Number	11/428,822
Filing Date	July 5, 2006
First Named Inventor	Samuel F. Wood
Art Unit	2614
Examiner Name	Not yet known
Attorney Docket Number	TEL-M-8801-1P-1C

U. S. PATENT DOCUMENTS

Examiner Initials*	Cite No.[1]	Document Number Number-Kind Code[2] (if known)	Publication Date MM-DD-YYYY	Name of Patentee or Applicant of Cited Document	Pages, Columns, Lines, Where Relevant Passages or Relevant Figures Appear
		US-			
		US-			
		US-			
		US-			
		US-			
		US-			
		US-			
		US-			
		US-			
		US-			
		US-			
		US-			
		US-			
		US-			
		US-			
		US-			
		US-			
		US-			
		US-			
		US-			

FOREIGN PATENT DOCUMENTS

Examiner Initials*	Cite No.[1]	Foreign Patent Document Country Code[3]-Number[4]-Kind Code[5] (if known)	Publication Date MM-DD-YYYY	Name of Patentee or Applicant of Cited Document	Pages, Columns, Lines, Where Relevant Passages Or Relevant Figures Appear	T[6]
		EP 0 789 470	Aug., 1997			
		EP 0 794 650	Sep., 1997			
		EP 0 797 373	Sep., 1997			
		EP 0 824 298	Feb., 1998			
		EP 0 829 995	Mar., 1998			
		EP 0 841 831	May., 1998			

Examiner Signature		Date Considered	

*EXAMINER: Initial if reference considered, whether or not citation is in conformance with MPEP 609. Draw line through citation if not in conformance and not considered. Include copy of this form with next communication to applicant. [1] Applicant's unique citation designation number (optional). [2] See Kinds Codes of USPTO Patent Documents at www.uspto.gov or MPEP 901.04. [3] Enter Office that issued the document, by the two-letter code (WIPO Standard ST.3). [4] For Japanese patent documents, the indication of the year of the reign of the Emperor must precede the serial number of the patent document. [5] Kind of document by the appropriate symbols as indicated on the document under WIPO Standard ST.16 if possible. [6] Applicant is to place a check mark here if English language Translation is attached.

This collection of information is required by 37 CFR 1.97 and 1.98. The information is required to obtain or retain a benefit by the public which is to file (and by the USPTO to process) an application. Confidentiality is governed by 35 U.S.C. 122 and 37 CFR 1.14. This collection is estimated to take 2 hours to complete, including gathering, preparing, and submitting the completed application form to the USPTO. Time will vary depending upon the individual case. Any comments on the amount of time you require to complete this form and/or suggestions for reducing this burden, should be sent to the Chief Information Officer, U.S. Patent and Trademark Office, P.O. Box 1450, Alexandria, VA 22313-1450. DO NOT SEND FEES OR COMPLETED FORMS TO THIS ADDRESS. **SEND TO: Commissioner for Patents, P.O. Box 1450, Alexandria, VA 22313-1450.**

If you need assistance in completing the form, call 1-800-PTO-9199 (1-800-786-9199) and select option 2.

PTO/SB/08A (07-05)
Approved for use through 07/31/2006. OMB 0651-0031
U.S. Patent and Trademark Office; U.S. DEPARTMENT OF COMMERCE
Under the Paperwork Reduction Act of 1995, no persons are required to respond to a collection of information unless it contains a valid OMB control number.

Substitute for form 1449/PTO

INFORMATION DISCLOSURE STATEMENT BY APPLICANT

(Use as many sheets as necessary)

Sheet 13 of 22

Complete if Known	
Application Number	11/428,822
Filing Date	July 5, 2006
First Named Inventor	Samuel F. Wood
Art Unit	2614
Examiner Name	Not yet known
Attorney Docket Number	TEL-M-8801-1P-1C

U. S. PATENT DOCUMENTS

Examiner Initials*	Cite No.[1]	Document Number Number-Kind Code[2] (if known)	Publication Date MM-DD-YYYY	Name of Patentee or Applicant of Cited Document	Pages, Columns, Lines, Where Relevant Passages or Relevant Figures Appear
		US-			
		US-			
		US-			
		US-			
		US-			
		US-			
		US-			
		US-			
		US-			
		US-			
		US-			
		US-			
		US-			
		US-			
		US-			
		US-			
		US-			
		US-			
		US-			
		US-			
		US-			

FOREIGN PATENT DOCUMENTS

Examiner Initials*	Cite No.[1]	Foreign Patent Document Country Code[3]-Number[4]-Kind Code[5] (if known)	Publication Date MM-DD-YYYY	Name of Patentee or Applicant of Cited Document	Pages, Columns, Lines, Where Relevant Passages Or Relevant Figures Appear	T[6]
		EP 0 847 176	Jun., 1998			
		EP 0 866 596	Sep., 1998			
		EP 0 872 998	Oct., 1998			
		GB 2 315 190	Jan., 1998			
		JP 10-23067	Jan., 1998			
		JP 10-51453	Feb., 1998			

Examiner Signature		Date Considered	

*EXAMINER: Initial if reference considered, whether or not citation is in conformance with MPEP 609. Draw line through citation if not in conformance and not considered. Include copy of this form with next communication to applicant. [1] Applicant's unique citation designation number (optional). [2] See Kinds Codes of USPTO Patent Documents at www.uspto.gov or MPEP 901.04. [3] Enter Office that issued the document, by the two-letter code (WIPO Standard ST.3). [4] For Japanese patent documents, the indication of the year of the reign of the Emperor must precede the serial number of the patent document. [5] Kind of document by the appropriate symbols as indicated on the document under WIPO Standard ST.16 if possible. [6] Applicant is to place a check mark here if English language Translation is attached.

This collection of information is required by 37 CFR 1.97 and 1.98. The information is required to obtain or retain a benefit by the public which is to file (and by the USPTO to process) an application. Confidentiality is governed by 35 U.S.C. 122 and 37 CFR 1.14. This collection is estimated to take 2 hours to complete, including gathering, preparing, and submitting the completed application form to the USPTO. Time will vary depending upon the individual case. Any comments on the amount of time you require to complete this form and/or suggestions for reducing this burden, should be sent to the Chief Information Officer, U.S. Patent and Trademark Office, P.O. Box 1450, Alexandria, VA 22313-1450. DO NOT SEND FEES OR COMPLETED FORMS TO THIS ADDRESS. **SEND TO: Commissioner for Patents, P.O. Box 1450, Alexandria, VA 22313-1450.**

If you need assistance in completing the form, call 1-800-PTO-9199 (1-800-786-9199) and select option 2.

PTO/SB/08A (07-05)
Approved for use through 07/31/2006. OMB 0651-0031
U.S. Patent and Trademark Office; U.S. DEPARTMENT OF COMMERCE
Under the Paperwork Reduction Act of 1995, no persons are required to respond to a collection of information unless it contains a valid OMB control number.

Substitute for form 1449/PTO

INFORMATION DISCLOSURE STATEMENT BY APPLICANT

(Use as many sheets as necessary)

Sheet 14 of 22

Complete if Known	
Application Number	11/428,822
Filing Date	July 5, 2006
First Named Inventor	Samuel F. Wood
Art Unit	2614
Examiner Name	Not yet known
Attorney Docket Number	TEL-M-8801-1P-1C

U. S. PATENT DOCUMENTS

Examiner Initials*	Cite No.[1]	Document Number Number-Kind Code[2] (if known)	Publication Date MM-DD-YYYY	Name of Patentee or Applicant of Cited Document	Pages, Columns, Lines, Where Relevant Passages or Relevant Figures Appear
		US-			
		US-			
		US-			
		US-			
		US-			
		US-			
		US-			
		US-			
		US-			
		US-			
		US-			
		US-			
		US-			
		US-			
		US-			
		US-			
		US-			
		US-			
		US-			
		US-			

FOREIGN PATENT DOCUMENTS

Examiner Initials*	Cite No.[1]	Foreign Patent Document Country Code[3]-Number[4]-Kind Code[5] (if known)	Publication Date MM-DD-YYYY	Name of Patentee or Applicant of Cited Document	Pages, Columns, Lines, Where Relevant Passages Or Relevant Figures Appear	T[6]
		JP 10-164135	Jun., 1998			
		JP 10-164257	Jun., 1998			
		WO 96/08935	Mar., 1996			
		WO 96/15598	May., 1996			
		WO 97/14238	Apr., 1997			
		WO 97/14234 A2	Apr., 1997			

Examiner Signature		Date Considered	

*EXAMINER: Initial if reference considered, whether or not citation is in conformance with MPEP 609. Draw line through citation if not in conformance and not considered. Include copy of this form with next communication to applicant. [1] Applicant's unique citation designation number (optional). [2] See Kinds Codes of USPTO Patent Documents at www.uspto.gov or MPEP 901.04. [3] Enter Office that issued the document, by the two-letter code (WIPO Standard ST.3). [4] For Japanese patent documents, the indication of the year of the reign of the Emperor must precede the serial number of the patent document. [5] Kind of document by the appropriate symbols as indicated on the document under WIPO Standard ST.16 if possible. [6] Applicant is to place a check mark here if English language Translation is attached.

This collection of information is required by 37 CFR 1.97 and 1.98. The information is required to obtain or retain a benefit by the public which is to file (and by the USPTO to process) an application. Confidentiality is governed by 35 U.S.C. 122 and 37 CFR 1.14. This collection is estimated to take 2 hours to complete, including gathering, preparing, and submitting the completed application form to the USPTO. Time will vary depending upon the individual case. Any comments on the amount of time you require to complete this form and/or suggestions for reducing this burden, should be sent to the Chief Information Officer, U.S. Patent and Trademark Office, P.O. Box 1450, Alexandria, VA 22313-1450. DO NOT SEND FEES OR COMPLETED FORMS TO THIS ADDRESS. **SEND TO: Commissioner for Patents, P.O. Box 1450, Alexandria, VA 22313-1450.**

If you need assistance in completing the form, call 1-800-PTO-9199 (1-800-786-9199) and select option 2.

PTO/SB/08A (07-05)
Approved for use through 07/31/2006. OMB 0651-0031
U.S. Patent and Trademark Office; U.S. DEPARTMENT OF COMMERCE
Under the Paperwork Reduction Act of 1995, no persons are required to respond to a collection of information unless it contains a valid OMB control number.

Substitute for form 1449/PTO

INFORMATION DISCLOSURE STATEMENT BY APPLICANT

(Use as many sheets as necessary)

Sheet 15 of 22

Complete if Known	
Application Number	11/428,822
Filing Date	July 5, 2006
First Named Inventor	Samuel F. Wood
Art Unit	2614
Examiner Name	Not yet known
Attorney Docket Number	TEL-M-8801-1P-1C

U. S. PATENT DOCUMENTS

Examiner Initials*	Cite No.[1]	Document Number Number-Kind Code[2] (if known)	Publication Date MM-DD-YYYY	Name of Patentee or Applicant of Cited Document	Pages, Columns, Lines, Where Relevant Passages or Relevant Figures Appear
		US-			
		US-			
		US-			
		US-			
		US-			
		US-			
		US-			
		US-			
		US-			
		US-			
		US-			
		US-			
		US-			
		US-			
		US-			
		US-			
		US-			
		US-			
		US-			
		US-			

FOREIGN PATENT DOCUMENTS

Examiner Initials*	Cite No.[1]	Foreign Patent Document Country Code[3]-Number[4]-Kind Code[5] (if known)	Publication Date MM-DD-YYYY	Name of Patentee or Applicant of Cited Document	Pages, Columns, Lines, Where Relevant Passages Or Relevant Figures Appear	T[6]
		WO 97/16007	May., 1997			
		WO 97/22216	Jun., 1997			
		WO 97/23078	Jun., 1997			
		WO 97/27692	Jul., 1997			
		WO 97/28628	Aug., 1997			
		WO 97/29581	Aug., 1997			

Examiner Signature		Date Considered	

*EXAMINER: Initial if reference considered, whether or not citation is in conformance with MPEP 609. Draw line through citation if not in conformance and not considered. Include copy of this form with next communication to applicant. [1] Applicant's unique citation designation number (optional). [2] See Kinds Codes of USPTO Patent Documents at www.uspto.gov or MPEP 901.04. [3] Enter Office that issued the document, by the two-letter code (WIPO Standard ST.3). [4] For Japanese patent documents, the indication of the year of the reign of the Emperor must precede the serial number of the patent document. [5]Kind of document by the appropriate symbols as indicated on the document under WIPO Standard ST.16 if possible. [6] Applicant is to place a check mark here if English language Translation is attached.

This collection of information is required by 37 CFR 1.97 and 1.98. The information is required to obtain or retain a benefit by the public which is to file (and by the USPTO to process) an application. Confidentiality is governed by 35 U.S.C. 122 and 37 CFR 1.14. This collection is estimated to take 2 hours to complete, including gathering, preparing, and submitting the completed application form to the USPTO. Time will vary depending upon the individual case. Any comments on the amount of time you require to complete this form and/or suggestions for reducing this burden, should be sent to the Chief Information Officer, U.S. Patent and Trademark Office, P.O. Box 1450, Alexandria, VA 22313-1450. DO NOT SEND FEES OR COMPLETED FORMS TO THIS ADDRESS. **SEND TO: Commissioner for Patents, P.O. Box 1450, Alexandria, VA 22313-1450.**

If you need assistance in completing the form, call 1-800-PTO-9199 (1-800-786-9199) and select option 2.

PTO/SB/08A (07-05)
Approved for use through 07/31/2006. OMB 0651-0031
U.S. Patent and Trademark Office; U.S. DEPARTMENT OF COMMERCE
Under the Paperwork Reduction Act of 1995, no persons are required to respond to a collection of information unless it contains a valid OMB control number.

Substitute for form 1449/PTO

INFORMATION DISCLOSURE STATEMENT BY APPLICANT

(Use as many sheets as necessary)

Sheet 16 of 22

Complete if Known	
Application Number	11/428,822
Filing Date	July 5, 2006
First Named Inventor	Samuel F. Wood
Art Unit	2614
Examiner Name	Not yet known
Attorney Docket Number	TEL-M-8801-1P-1C

U. S. PATENT DOCUMENTS

Examiner Initials*	Cite No.[1]	Document Number Number-Kind Code[2] (if known)	Publication Date MM-DD-YYYY	Name of Patentee or Applicant of Cited Document	Pages, Columns, Lines, Where Relevant Passages or Relevant Figures Appear
		US-			
		US-			
		US-			
		US-			
		US-			
		US-			
		US-			
		US-			
		US-			
		US-			
		US-			
		US-			
		US-			
		US-			
		US-			
		US-			
		US-			
		US-			
		US-			
		US-			

FOREIGN PATENT DOCUMENTS

Examiner Initials*	Cite No.[1]	Foreign Patent Document Country Code[3]-Number[4]-Kind Code[5] (if known)	Publication Date MM-DD-YYYY	Name of Patentee or Applicant of Cited Document	Pages, Columns, Lines, Where Relevant Passages Or Relevant Figures Appear	T[6]
		WO 97/31492	Aug., 1997			
		WO 97/33412	Sep., 1997			
		WO 97/38551	Oct., 1997			
		WO 97/39560	Oct., 1997			
		WO 97/38511 A2	Oct., 1997			
		WO 97/47118	Dec., 1997			

Examiner Signature		Date Considered	

*EXAMINER: Initial if reference considered, whether or not citation is in conformance with MPEP 609. Draw line through citation if not in conformance and not considered. Include copy of this form with next communication to applicant. [1] Applicant's unique citation designation number (optional). [2] See Kinds Codes of USPTO Patent Documents at www.uspto.gov or MPEP 901.04. [3] Enter Office that issued the document, by the two-letter code (WIPO Standard ST.3). [4] For Japanese patent documents, the indication of the year of the reign of the Emperor must precede the serial number of the patent document. [5]Kind of document by the appropriate symbols as indicated on the document under WIPO Standard ST.16 if possible. [6] Applicant is to place a check mark here if English language Translation is attached.

This collection of information is required by 37 CFR 1.97 and 1.98. The information is required to obtain or retain a benefit by the public which is to file (and by the USPTO to process) an application. Confidentiality is governed by 35 U.S.C. 122 and 37 CFR 1.14. This collection is estimated to take 2 hours to complete, including gathering, preparing, and submitting the completed application form to the USPTO. Time will vary depending upon the individual case. Any comments on the amount of time you require to complete this form and/or suggestions for reducing this burden, should be sent to the Chief Information Officer, U.S. Patent and Trademark Office, P.O. Box 1450, Alexandria, VA 22313-1450. DO NOT SEND FEES OR COMPLETED FORMS TO THIS ADDRESS. **SEND TO: Commissioner for Patents, P.O. Box 1450, Alexandria, VA 22313-1450.**

If you need assistance in completing the form, call 1-800-PTO-9199 (1-800-786-9199) and select option 2.

PTO/SB/08A (07-05)
Approved for use through 07/31/2006. OMB 0651-0031
U.S. Patent and Trademark Office; U.S. DEPARTMENT OF COMMERCE
Under the Paperwork Reduction Act of 1995, no persons are required to respond to a collection of information unless it contains a valid OMB control number.

Substitute for form 1449/PTO

INFORMATION DISCLOSURE STATEMENT BY APPLICANT

(Use as many sheets as necessary)

Sheet 17 of 22

Complete if Known	
Application Number	11/428,822
Filing Date	July 5, 2006
First Named Inventor	Samuel F. Wood
Art Unit	2614
Examiner Name	Not yet known
Attorney Docket Number	TEL-M-8801-1P-1C

U. S. PATENT DOCUMENTS

Examiner Initials*	Cite No.[1]	Document Number Number-Kind Code[2] (if known)	Publication Date MM-DD-YYYY	Name of Patentee or Applicant of Cited Document	Pages, Columns, Lines, Where Relevant Passages or Relevant Figures Appear
		US-			
		US-			
		US-			
		US-			
		US-			
		US-			
		US-			
		US-			
		US-			
		US-			
		US-			
		US-			
		US-			
		US-			
		US-			
		US-			
		US-			
		US-			
		US-			
		US-			

FOREIGN PATENT DOCUMENTS

Examiner Initials*	Cite No.[1]	Foreign Patent Document Country Code[3]-Number[4]-Kind Code[5] (if known)	Publication Date MM-DD-YYYY	Name of Patentee or Applicant of Cited Document	Pages, Columns, Lines, Where Relevant Passages Or Relevant Figures Appear	T[6]
		WO 97/50217	Dec., 1997			
		WO 97/50271	Dec., 1997			
		WO 97/46073 A2	Dec., 1997			
		WO 97/50277 A2	Dec., 1997			
		WO 98/04989	Feb., 1998			
		WO 98/11704	Mar., 1998			

Examiner Signature		Date Considered	

*EXAMINER: Initial if reference considered, whether or not citation is in conformance with MPEP 609. Draw line through citation if not in conformance and not considered. Include copy of this form with next communication to applicant. [1] Applicant's unique citation designation number (optional). [2] See Kinds Codes of USPTO Patent Documents at www.uspto.gov or MPEP 901.04. [3] Enter Office that issued the document, by the two-letter code (WIPO Standard ST.3). [4] For Japanese patent documents, the indication of the year of the reign of the Emperor must precede the serial number of the patent document. [5] Kind of document by the appropriate symbols as indicated on the document under WIPO Standard ST.16 if possible. [6] Applicant is to place a check mark here if English language Translation is attached.

This collection of information is required by 37 CFR 1.97 and 1.98. The information is required to obtain or retain a benefit by the public which is to file (and by the USPTO to process) an application. Confidentiality is governed by 35 U.S.C. 122 and 37 CFR 1.14. This collection is estimated to take 2 hours to complete, including gathering, preparing, and submitting the completed application form to the USPTO. Time will vary depending upon the individual case. Any comments on the amount of time you require to complete this form and/or suggestions for reducing this burden, should be sent to the Chief Information Officer, U.S. Patent and Trademark Office, P.O. Box 1450, Alexandria, VA 22313-1450. DO NOT SEND FEES OR COMPLETED FORMS TO THIS ADDRESS. **SEND TO: Commissioner for Patents, P.O. Box 1450, Alexandria, VA 22313-1450.**

If you need assistance in completing the form, call 1-800-PTO-9199 (1-800-786-9199) and select option 2.

PTO/SB/08A (07-05)
Approved for use through 07/31/2006. OMB 0651-0031
U.S. Patent and Trademark Office; U.S. DEPARTMENT OF COMMERCE
Under the Paperwork Reduction Act of 1995, no persons are required to respond to a collection of information unless it contains a valid OMB control number.

Substitute for form 1449/PTO

INFORMATION DISCLOSURE STATEMENT BY APPLICANT

(Use as many sheets as necessary)

Sheet 18 of 22

Complete if Known	
Application Number	11/428,822
Filing Date	July 5, 2006
First Named Inventor	Samuel F. Wood
Art Unit	2614
Examiner Name	Not yet known
Attorney Docket Number	TEL-M-8801-1P-1C

U. S. PATENT DOCUMENTS

Examiner Initials*	Cite No.[1]	Document Number Number-Kind Code[2] (if known)	Publication Date MM-DD-YYYY	Name of Patentee or Applicant of Cited Document	Pages, Columns, Lines, Where Relevant Passages or Relevant Figures Appear
		US-			
		US-			
		US-			
		US-			
		US-			
		US-			
		US-			
		US-			
		US-			
		US-			
		US-			
		US-			
		US-			
		US-			
		US-			
		US-			
		US-			
		US-			
		US-			
		US-			

FOREIGN PATENT DOCUMENTS

Examiner Initials*	Cite No.[1]	Foreign Patent Document Country Code[3]-Number[4]-Kind Code[5] (if known)	Publication Date MM-DD-YYYY	Name of Patentee or Applicant of Cited Document	Pages, Columns, Lines, Where Relevant Passages Or Relevant Figures Appear	T[6]
		Wo 98/12860	Mar., 1998			
		WO 98/13974	Apr., 1998			
		WO 98/18238	Apr., 1998			
		WO 98/18289	Apr., 1998			
		WO 98/19425	May., 1998			
		WO 98/19445	May., 1998			

Examiner Signature		Date Considered	

*EXAMINER: Initial if reference considered, whether or not citation is in conformance with MPEP 609. Draw line through citation if not in conformance and not considered. Include copy of this form with next communication to applicant. [1] Applicant's unique citation designation number (optional). [2] See Kinds Codes of USPTO Patent Documents at www.uspto.gov or MPEP 901.04. [3] Enter Office that issued the document, by the two-letter code (WIPO Standard ST.3). [4] For Japanese patent documents, the indication of the year of the reign of the Emperor must precede the serial number of the patent document. [5]Kind of document by the appropriate symbols as indicated on the document under WIPO Standard ST.16 if possible. [6] Applicant is to place a check mark here if English language Translation is attached.

This collection of information is required by 37 CFR 1.97 and 1.98. The information is required to obtain or retain a benefit by the public which is to file (and by the USPTO to process) an application. Confidentiality is governed by 35 U.S.C. 122 and 37 CFR 1.14. This collection is estimated to take 2 hours to complete, including gathering, preparing, and submitting the completed application form to the USPTO. Time will vary depending upon the individual case. Any comments on the amount of time you require to complete this form and/or suggestions for reducing this burden, should be sent to the Chief Information Officer, U.S. Patent and Trademark Office, P.O. Box 1450, Alexandria, VA 22313-1450. DO NOT SEND FEES OR COMPLETED FORMS TO THIS ADDRESS. **SEND TO: Commissioner for Patents, P.O. Box 1450, Alexandria, VA 22313-1450.**

If you need assistance in completing the form, call 1-800-PTO-9199 (1-800-786-9199) and select option 2.

PTO/SB/08A (07-05)
Approved for use through 07/31/2006. OMB 0651-0031
U.S. Patent and Trademark Office; U.S. DEPARTMENT OF COMMERCE
Under the Paperwork Reduction Act of 1995, no persons are required to respond to a collection of information unless it contains a valid OMB control number.

Substitute for form 1449/PTO

INFORMATION DISCLOSURE STATEMENT BY APPLICANT

(Use as many sheets as necessary)

Sheet 19 of 22

Complete if Known	
Application Number	11/428,822
Filing Date	July 5, 2006
First Named Inventor	Samuel F. Wood
Art Unit	2614
Examiner Name	Not yet known
Attorney Docket Number	TEL-M-8801-1P-1C

U. S. PATENT DOCUMENTS

Examiner Initials*	Cite No.[1]	Document Number Number-Kind Code[2] (if known)	Publication Date MM-DD-YYYY	Name of Patentee or Applicant of Cited Document	Pages, Columns, Lines, Where Relevant Passages or Relevant Figures Appear
		US-			
		US-			
		US-			
		US-			
		US-			
		US-			
		US-			
		US-			
		US-			
		US-			
		US-			
		US-			
		US-			
		US-			
		US-			
		US-			
		US-			
		US-			
		US-			
		US-			

FOREIGN PATENT DOCUMENTS

Examiner Initials*	Cite No.[1]	Foreign Patent Document Country Code[3]-Number[4]-Kind Code[5] (if known)	Publication Date MM-DD-YYYY	Name of Patentee or Applicant of Cited Document	Pages, Columns, Lines, Where Relevant Passages Or Relevant Figures Appear	T[6]
		WO 98/20701	May., 1998			
		WO 98/23067	May., 1998			
		WO 98/23080	May., 1998			
		WO 98/26543	Jun., 1998			
		WO 0 851 653	Jul., 1998			
		WO 0 853 411 A2	Jul., 1998			

Examiner Signature		Date Considered	

*EXAMINER: Initial if reference considered, whether or not citation is in conformance with MPEP 609. Draw line through citation if not in conformance and not considered. Include copy of this form with next communication to applicant. [1] Applicant's unique citation designation number (optional). [2] See Kinds Codes of USPTO Patent Documents at www.uspto.gov or MPEP 901.04. [3] Enter Office that issued the document, by the two-letter code (WIPO Standard ST.3). [4] For Japanese patent documents, the indication of the year of the reign of the Emperor must precede the serial number of the patent document. [5] Kind of document by the appropriate symbols as indicated on the document under WIPO Standard ST.16 if possible. [6] Applicant is to place a check mark here if English language Translation is attached.

This collection of information is required by 37 CFR 1.97 and 1.98. The information is required to obtain or retain a benefit by the public which is to file (and by the USPTO to process) an application. Confidentiality is governed by 35 U.S.C. 122 and 37 CFR 1.14. This collection is estimated to take 2 hours to complete, including gathering, preparing, and submitting the completed application form to the USPTO. Time will vary depending upon the individual case. Any comments on the amount of time you require to complete this form and/or suggestions for reducing this burden, should be sent to the Chief Information Officer, U.S. Patent and Trademark Office, P.O. Box 1450, Alexandria, VA 22313-1450. DO NOT SEND FEES OR COMPLETED FORMS TO THIS ADDRESS. **SEND TO: Commissioner for Patents, P.O. Box 1450, Alexandria, VA 22313-1450.**

If you need assistance in completing the form, call 1-800-PTO-9199 (1-800-786-9199) and select option 2.

PTO/SB/08A (07-05)
Approved for use through 07/31/2006. OMB 0651-0031
U.S. Patent and Trademark Office; U.S. DEPARTMENT OF COMMERCE
Under the Paperwork Reduction Act of 1995, no persons are required to respond to a collection of information unless it contains a valid OMB control number.

Substitute for form 1449/PTO

INFORMATION DISCLOSURE STATEMENT BY APPLICANT

(Use as many sheets as necessary)

Sheet 20 of 22

Complete if Known	
Application Number	11/428,822
Filing Date	July 5, 2006
First Named Inventor	Samuel F. Wood
Art Unit	2614
Examiner Name	Not yet known
Attorney Docket Number	TEL-M-8801-1P-1C

U. S. PATENT DOCUMENTS

Examiner Initials*	Cite No.[1]	Document Number Number-Kind Code[2] (if known)	Publication Date MM-DD-YYYY	Name of Patentee or Applicant of Cited Document	Pages, Columns, Lines, Where Relevant Passages or Relevant Figures Appear
		US-			
		US-			
		US-			
		US-			
		US-			
		US-			
		US-			
		US-			
		US-			
		US-			
		US-			
		US-			
		US-			
		US-			
		US-			
		US-			
		US-			
		US-			
		US-			
		US-			

FOREIGN PATENT DOCUMENTS

Examiner Initials*	Cite No.[1]	Foreign Patent Document Country Code[3]-Number[4]-Kind Code[5] (if known)	Publication Date MM-DD-YYYY	Name of Patentee or Applicant of Cited Document	Pages, Columns, Lines, Where Relevant Passages Or Relevant Figures Appear	T[6]
		WO 98/28885	Jul., 1998			
		WO 98/30007	Jul., 1998			
		WO 98/30008	Jul., 1998			
		WO 98/34391	Aug., 1998			
		WO 98/34399	Aug., 1998			
		WO 98/36543	Aug., 1998			

Examiner Signature		Date Considered	

*EXAMINER: Initial if reference considered, whether or not citation is in conformance with MPEP 609. Draw line through citation if not in conformance and not considered. Include copy of this form with next communication to applicant. [1] Applicant's unique citation designation number (optional). [2] See Kinds Codes of USPTO Patent Documents at www.uspto.gov or MPEP 901.04. [3] Enter Office that issued the document, by the two-letter code (WIPO Standard ST.3). [4] For Japanese patent documents, the indication of the year of the reign of the Emperor must precede the serial number of the patent document. [5]Kind of document by the appropriate symbols as indicated on the document under WIPO Standard ST.16 if possible. [6] Applicant is to place a check mark here if English language Translation is attached.

This collection of information is required by 37 CFR 1.97 and 1.98. The information is required to obtain or retain a benefit by the public which is to file (and by the USPTO to process) an application. Confidentiality is governed by 35 U.S.C. 122 and 37 CFR 1.14. This collection is estimated to take 2 hours to complete, including gathering, preparing, and submitting the completed application form to the USPTO. Time will vary depending upon the individual case. Any comments on the amount of time you require to complete this form and/or suggestions for reducing this burden, should be sent to the Chief Information Officer, U.S. Patent and Trademark Office, P.O. Box 1450, Alexandria, VA 22313-1450. DO NOT SEND FEES OR COMPLETED FORMS TO THIS ADDRESS. **SEND TO: Commissioner for Patents, P.O. Box 1450, Alexandria, VA 22313-1450.**

If you need assistance in completing the form, call 1-800-PTO-9199 (1-800-786-9199) and select option 2.

PTO/SB/08A (07-05)
Approved for use through 07/31/2006. OMB 0651-0031
U.S. Patent and Trademark Office; U.S. DEPARTMENT OF COMMERCE
Under the Paperwork Reduction Act of 1995, no persons are required to respond to a collection of information unless it contains a valid OMB control number.

Substitute for form 1449/PTO

INFORMATION DISCLOSURE STATEMENT BY APPLICANT

(Use as many sheets as necessary)

Sheet 21 of 22

Complete if Known	
Application Number	11/428,822
Filing Date	July 5, 2006
First Named Inventor	Samuel F. Wood
Art Unit	2614
Examiner Name	Not yet known
Attorney Docket Number	TEL-M-8801-1P-1C

U. S. PATENT DOCUMENTS

Examiner Initials*	Cite No.[1]	Document Number Number-Kind Code[2] (if known)	Publication Date MM-DD-YYYY	Name of Patentee or Applicant of Cited Document	Pages, Columns, Lines, Where Relevant Passages or Relevant Figures Appear
		US-			
		US-			
		US-			
		US-			
		US-			
		US-			
		US-			
		US-			
		US-			
		US-			
		US-			
		US-			
		US-			
		US-			
		US-			
		US-			
		US-			
		US-			
		US-			
		US-			

FOREIGN PATENT DOCUMENTS

Examiner Initials*	Cite No.[1]	Foreign Patent Document Country Code[3]-Number[4]-Kind Code[5] (if known)	Publication Date MM-DD-YYYY	Name of Patentee or Applicant of Cited Document	Pages, Columns, Lines, Where Relevant Passages Or Relevant Figures Appear	T[6]
		WO 98/37665	Aug., 1998			
		WO 98/37688 A2	Aug., 1998			
		WO 98/39897	Sep., 1998			
		WO 98/42104	Sep., 1998			
		WO 98/42107	Sep., 1998			
		WO 98/42146	Sep., 1998			

Examiner Signature		Date Considered	

*EXAMINER: Initial if reference considered, whether or not citation is in conformance with MPEP 609. Draw line through citation if not in conformance and not considered. Include copy of this form with next communication to applicant. [1] Applicant's unique citation designation number (optional). [2] See Kinds Codes of USPTO Patent Documents at www.uspto.gov or MPEP 901.04. [3] Enter Office that issued the document, by the two-letter code (WIPO Standard ST.3). [4] For Japanese patent documents, the indication of the year of the reign of the Emperor must precede the serial number of the patent document. [5] Kind of document by the appropriate symbols as indicated on the document under WIPO Standard ST.16 if possible. [6] Applicant is to place a check mark here if English language Translation is attached.

This collection of information is required by 37 CFR 1.97 and 1.98. The information is required to obtain or retain a benefit by the public which is to file (and by the USPTO to process) an application. Confidentiality is governed by 35 U.S.C. 122 and 37 CFR 1.14. This collection is estimated to take 2 hours to complete, including gathering, preparing, and submitting the completed application form to the USPTO. Time will vary depending upon the individual case. Any comments on the amount of time you require to complete this form and/or suggestions for reducing this burden, should be sent to the Chief Information Officer, U.S. Patent and Trademark Office, P.O. Box 1450, Alexandria, VA 22313-1450. DO NOT SEND FEES OR COMPLETED FORMS TO THIS ADDRESS. **SEND TO: Commissioner for Patents, P.O. Box 1450, Alexandria, VA 22313-1450.**

If you need assistance in completing the form, call 1-800-PTO-9199 (1-800-786-9199) and select option 2.

PTO/SB/08A (07-05)
Approved for use through 07/31/2006. OMB 0651-0031
U.S. Patent and Trademark Office; U.S. DEPARTMENT OF COMMERCE
Under the Paperwork Reduction Act of 1995, no persons are required to respond to a collection of information unless it contains a valid OMB control number.

Substitute for form 1449/PTO

INFORMATION DISCLOSURE STATEMENT BY APPLICANT

(Use as many sheets as necessary)

Sheet 22 of 22

Complete if Known	
Application Number	11/428,822
Filing Date	July 5, 2006
First Named Inventor	Samuel F. Wood
Art Unit	2614
Examiner Name	Not yet known
Attorney Docket Number	TEL-M-8801-1P-1C

U. S. PATENT DOCUMENTS

Examiner Initials*	Cite No.[1]	Document Number Number-Kind Code[2] (if known)	Publication Date MM-DD-YYYY	Name of Patentee or Applicant of Cited Document	Pages, Columns, Lines, Where Relevant Passages or Relevant Figures Appear
		US-			
		US-			
		US-			
		US-			
		US-			
		US-			
		US-			
		US-			
		US-			
		US-			
		US-			
		US-			
		US-			
		US-			
		US-			
		US-			
		US-			
		US-			
		US-			
		US-			

FOREIGN PATENT DOCUMENTS

Examiner Initials*	Cite No.[1]	Foreign Patent Document Country Code[3]-Number[4]-Kind Code[5] (if known)	Publication Date MM-DD-YYYY	Name of Patentee or Applicant of Cited Document	Pages, Columns, Lines, Where Relevant Passages Or Relevant Figures Appear	T[6]
		WO 98/47256 A2	Oct., 1998			
		WO 98/51063	Nov., 1998			

Examiner Signature		Date Considered	

*EXAMINER: Initial if reference considered, whether or not citation is in conformance with MPEP 609. Draw line through citation if not in conformance and not considered. Include copy of this form with next communication to applicant. [1] Applicant's unique citation designation number (optional). [2] See Kinds Codes of USPTO Patent Documents at www.uspto.gov or MPEP 901.04. [3] Enter Office that issued the document, by the two-letter code (WIPO Standard ST.3). [4] For Japanese patent documents, the indication of the year of the reign of the Emperor must precede the serial number of the patent document. [5]Kind of document by the appropriate symbols as indicated on the document under WIPO Standard ST.16 if possible. [6] Applicant is to place a check mark here if English language Translation is attached.

This collection of information is required by 37 CFR 1.97 and 1.98. The information is required to obtain or retain a benefit by the public which is to file (and by the USPTO to process) an application. Confidentiality is governed by 35 U.S.C. 122 and 37 CFR 1.14. This collection is estimated to take 2 hours to complete, including gathering, preparing, and submitting the completed application form to the USPTO. Time will vary depending upon the individual case. Any comments on the amount of time you require to complete this form and/or suggestions for reducing this burden, should be sent to the Chief Information Officer, U.S. Patent and Trademark Office, P.O. Box 1450, Alexandria, VA 22313-1450. DO NOT SEND FEES OR COMPLETED FORMS TO THIS ADDRESS. **SEND TO: Commissioner for Patents, P.O. Box 1450, Alexandria, VA 22313-1450.**

If you need assistance in completing the form, call 1-800-PTO-9199 (1-800-786-9199) and select option 2.

PTO/SB/05 (04-05)
Approved for use through 07/31/2006. OMB 0651-0032
U.S. Patent and Trademark Office. U.S. DEPARTMENT OF COMMERCE
Under the Paperwork Reduction Act of 1995, no persons are required to respond to a collection of information unless it displays a valid OMB control number.

UTILITY PATENT APPLICATION TRANSMITTAL

(Only for new nonprovisional applications under 37 CFR 1.53(b))

Attorney Docket No.	TEL-M-8801-1P-1C
First Inventor	Samuel F. Wood
Title	Tandem Access Controller Within The Public
Express Mail Label No.	Electronic Filing

APPLICATION ELEMENTS

See MPEP chapter 600 concerning utility patent application contents.

1. ☑ **Fee Transmittal Form** (e.g., PTO/SB/17)
   (Submit an original and a duplicate for fee processing)
2. ☑ **Applicant claims small entity status.**
   See 37 CFR 1.27.
3. ☑ **Specification** [*Total Pages* 31]
   Both the claims and abstract must start on a new page
   (For information on the preferred arrangement, see MPEP 608.01(a))
4. ☑ **Drawing(s)** (*35 U.S.C. 113*) [*Total Sheets* 11]
5. **Oath or Declaration** [*Total Sheets* 3]
   a. ☐ Newly executed (original or copy)
   b. ☑ A copy from a prior application (37 CFR 1.63(d))
   (for continuation/divisional with Box 18 completed)
   i. ☐ DELETION OF INVENTOR(S)
   Signed statement attached deleting inventor(s) name in the prior application, see 37 CFR 1.63(d)(2) and 1.33(b).
6. ☑ **Application Data Sheet.** See 37 CFR 1.76
7. ☐ **CD-ROM or CD-R** in duplicate, large table or Computer Program *(Appendix)*
   ☐ Landscape Table on CD
8. **Nucleotide and/or Amino Acid Sequence Submission**
   (if applicable, items a. – c. are required)
   a. ☐ Computer Readable Form (CRF)
   b. Specification Sequence Listing on:
      i. ☐ CD-ROM or CD-R (2 copies); or
      ii. ☐ Paper
   c. ☐ Statements verifying identity of above copies

ADDRESS TO:
Commissioner for Patents
P.O. Box 1450
Alexandria VA 22313-1450

ACCOMPANYING APPLICATION PARTS

9. ☐ **Assignment Papers** (cover sheet & document(s))
   Name of Assignee_____
10. ☐ **37 CFR 3.73(b) Statement** *(when there is an assignee)* ☐ **Power of Attorney**
11. ☐ **English Translation Document** *(if applicable)*
12. ☐ **Information Disclosure Statement** (PTO/SB/08 or PTO-1449)
    ☐ Copies of citations attached
13. ☐ **Preliminary Amendment**
14. ☐ **Return Receipt Postcard** (MPEP 503)
    (*Should be specifically itemized)*
15. ☐ **Certified Copy of Priority Document(s)**
    (if foreign priority is claimed)
16. ☐ **Nonpublication Request** under 35 U.S.C. 122(b)(2)(B)(i). Applicant must attach form PTO/SB/35 or equivalent.
17. ☐ Other:_____

18. If a CONTINUING APPLICATION, *check appropriate box, and supply the requisite information below and in the first sentence of the specification following the title, or in an Application Data Sheet under 37 CFR 1.76:*

☑ Continuation ☐ Divisional ☐ Continuation-in-part (CIP) of prior application No.: 10/426,279

Prior application information: *Examiner* Creighton H. Smith *Art Unit:* 2614

19. CORRESPONDENCE ADDRESS

☑ The address associated with Customer Number: 32566 ***OR*** ☐ Correspondence address below

Name	Brian D. Ogonowsky				
Address	Patent Law Group LLP 2635 North First St., Suite 223				
City	San Jose	State	California	Zip Code	95134
Country	USA	Telephone	(408) 382-0480	Email	brian@patentlawgroup.com

Signature	/Brian D Ogonowsky/	Date	2006-07-05
Name (Print/Type)	Brian D. Ogonowsky	Registration No. (Attorney/Agent)	31,988

This collection of information is required by 37 CFR 1.53(b). The information is required to obtain or retain a benefit by the public which is to file (and by the USPTO to process) an application. Confidentiality is governed by 35 U.S.C. 122 and 37 CFR 1.11 and 1.14. This collection is estimated to take 12 minutes to complete, including gathering, preparing, and submitting the completed application form to the USPTO. Time will vary depending upon the individual case. Any comments on the amount of time you require to complete this form and/or suggestions for reducing this burden, should be sent to the Chief Information Officer, U.S. Patent and Trademark Office, U.S. Department of Commerce, P.O. Box 1450, Alexandria, VA 22313-1450. DO NOT SEND FEES OR COMPLETED FORMS TO THIS ADDRESS. **SEND TO: Commissioner for Patents, P.O. Box 1450, Alexandria, VA 22313-1450.**
If you need assistance in completing the form, call 1-800-PTO-9199 and select option 2.

PTO/SB/14 (08-05)
Approved for use through 07/31/2006. OMB 0651-0032
U.S. Patent and Trademark Office; U.S. DEPARTMENT OF COMMERCE
Under the Paperwork Reduction Act of 1995, no persons are required to respond to a collection of information unless it contains a valid OMB control number.

Application Data Sheet 37 CFR 1.76	Attorney Docket Number	TEL-M-8801-1P-1C
	Application Number	
Title of Invention	Tandem Access Controller Within the Public Switched Telephone Network	

The application data sheet is part of the provisional or nonprovisional application for which it is being submitted. The following form contains the bibliographic data arranged in a format specified by the United States Patent and Trademark Office as outlined in 37 CFR 1.76.
This document may be completed electronically and submitted to the Office in electronic format using the Electronic Filing System (EFS) or the document may be printed and included in a paper filed application.

Secrecy Order 37 CFR 5.2

☐ Portions or all of the application associated with this Application Data Sheet may fall under a Secrecy Order pursuant to 37 CFR 5.2 (Paper filers only. Applications that fall under Secrecy Order may not be filed electronically.)

Applicant Information:

Applicant 1 Remove

Applicant Authority ◉ Inventor ○ Legal Representative under 35 U.S.C. 117 ○ Party of Interest under 35 U.S.C. 118

Prefix	Given Name	Middle Name	Family Name	Suffix
	Samuel	F.	Wood	

Residence Information (Select One) ◉ US Residency ○ Non US Residency ○ Active US Military Service

City	Los Altos Hills	State/Province	CA	Country of Residence i	US

Citizenship under 37 CFR 1.41(b) i: US

Mailing Address of Applicant:

Address 1	12648 La Cresta Court		
Address 2			
City	Los Altos Hills	State/Province	CA
Postal Code	94022	Country i	US

Applicant 2 Remove

Applicant Authority ◉ Inventor ○ Legal Representative under 35 U.S.C. 117 ○ Party of Interest under 35 U.S.C. 118

Prefix	Given Name	Middle Name	Family Name	Suffix
	Jerry	A.	Klein	

Residence Information (Select One) ◉ US Residency ○ Non US Residency ○ Active US Military Service

City	Los Altos	State/Province	CA	Country of Residence i	US

Citizenship under 37 CFR 1.41(b) i: US

Mailing Address of Applicant:

Address 1	671 Milverton Road		
Address 2			
City	Los Altos	State/Province	CA
Postal Code	94022	Country i	US

Applicant 3 Remove

Applicant Authority ◉ Inventor ○ Legal Representative under 35 U.S.C. 117 ○ Party of Interest under 35 U.S.C. 118

Prefix	Given Name	Middle Name	Family Name	Suffix
	Margaret	Susan	Asprey	

Residence Information (Select One) ◉ US Residency ○ Non US Residency ○ Active US Military Service

City	Los Altos	State/Province	CA	Country of Residence i	US

PTO/SB/14 (08-05)
Approved for use through 07/31/2006. OMB 0651-0032
U.S. Patent and Trademark Office; U.S. DEPARTMENT OF COMMERCE
Under the Paperwork Reduction Act of 1995, no persons are required to respond to a collection of information unless it contains a valid OMB control number.

Application Data Sheet 37 CFR 1.76	Attorney Docket Number	TEL-M-8801-1P-1C
	Application Number	
Title of Invention	Tandem Access Controller Within the Public Switched Telephone Network	

Citizenship under 37 CFR 1.41(b) [i]	US		
Mailing Address of Applicant:			
Address 1	422 Traverso Court		
Address 2			
City	Los Altos	**State/Province**	CA
Postal Code	94022	**Country**[i]	US

All Inventors Must Be Listed - Additional Inventor Information blocks may be generated within this form by selecting the **Add** button. Add

Correspondence Information:

Enter either Customer Number or complete the Correspondence Information section below.
For further information see 37 CFR 1.33(a).

☐ **An Address is being provided for the correspondence Information of this application.**

Customer Number	32566		
Email Address	brian@patentlawgroup.com	Add Email	Remove Email

Application Information:

Title of the Invention	Tandem Access Controller Within the Public Switched Telephone Network		
Attorney Docket Number	TEL-M-8801-1P-1C	**Small Entity Status Claimed**	☐
Application Type	Nonprovisional		
Subject Matter	Utility		
Suggested Class (if any)		**Sub Class (if any)**	
Suggested Technology Center (if any)			
Total Number of Drawing Sheets (if any)	11	**Suggested Figure for Publication (if any)**	1

Publication Information:

☐ Request Early Publication (Fee required at time of Request 37 CFR 1.219)

☐ Request Not to Publish. I hereby request that the attached application not be published under 35 U.S.C. 122(b) and certify that the invention disclosed in the attached application has not been and will not be the subject of an application filed in another country, or under a multilateral agreement, that requires publication at eighteen months after filing.

Representative Information:

Representative information should be provided for all practitioners having a power of attorney in the application. Providing this information in the Application Data Sheet does not constitute a power of attorney in the application (see 37 CFR 1.32).
Enter either Customer Number or complete the Representative Name section below. If both sections are completed the Customer Number will be used for the Representative Information during processing.

Please Select One:	◉ Customer Number	○ US Patent Practitioner	○ US Representative (37 CFR 11.9)

PTO/SB/14 (08-05)
Approved for use through 07/31/2006. OMB 0651-0032
U.S. Patent and Trademark Office; U.S. DEPARTMENT OF COMMERCE
Under the Paperwork Reduction Act of 1995, no persons are required to respond to a collection of information unless it contains a valid OMB control number.

Application Data Sheet 37 CFR 1.76	Attorney Docket Number	TEL-M-8801-1P-1C
	Application Number	
Title of Invention	Tandem Access Controller Within the Public Switched Telephone Network	

Customer Number	32566

Domestic Priority Information:

This section allows for the applicant to claim benefit under 35 U.S.C. 119(e), 120, 121, or 365(c). Providing this information in the application data sheet constitutes the specific reference required by 35 U.S.C. 119(e) or 120, and 37 CFR 1.78(a)(2) or CFR 1.78(a)(4), and need not otherwise be made part of the specification.

Prior Application Status	Pending		Remove
Application Number	Continuity Type	Prior Application Number	Filing Date (YYYY-MM-DD)
	Continuation of	10/426279	2003-04-30
Prior Application Status			Remove
Application Number	Continuity Type	Prior Application Number	Filing Date (YYYY-MM-DD)
10/426279	Continuation in part of	09/565565	2000-05-04

Additional Domestic Priority Data may be generated within this form by selecting the **Add** button. Add

Foreign Priority Information:

This section allows for the applicant to claim benefit of foreign priority and to identify any prior foreign application for which priority is not claimed. Providing this information in the application data sheet constitutes the claim for priority as required by 35 U.S.C. 119(b) and 37 CFR 1.55(a).

Remove

Application Number	Country [i]	Parent Filing Date (YYYY-MM-DD)	Priority Claimed
			○ Yes ◉ No

Additional Foreign Priority Data may be generated within this form by selecting the **Add** button. Add

Assignee Information:

Providing this information in the application data sheet does not substitute for compliance with any requirement of part 3 of Title 37 of the CFR to have an assignment recorded in the Office.

Assignee 1 Remove

If the Assignee is an Organization check here. ☑

Organization Name	Telemaze LLC		
Mailing Address Information:			
Address 1	101 North First Street		
Address 2			
City	Los Altos	**State/Province**	CA
Country [i]	US	Postal Code	94022
Phone Number		Fax Number	
Email Address			

Additional Assignee Data may be generated within this form by selecting the **Add** button. Add

PTO/SB/14 (08-05)
Approved for use through 07/31/2006. OMB 0651-0032
U.S. Patent and Trademark Office; U.S. DEPARTMENT OF COMMERCE
Under the Paperwork Reduction Act of 1995, no persons are required to respond to a collection of information unless it contains a valid OMB control number.

Application Data Sheet 37 CFR 1.76	Attorney Docket Number	TEL-M-8801-1P-1C
	Application Number	
Title of Invention	Tandem Access Controller Within the Public Switched Telephone Network	

Signature:

A signature of the applicant or representative is required in accordance with 37 CFR 1.33 and 10.18. Please see 37 CFR 1.4(d) for the form of the signature.					
Signature	/Brian D Ogonowsky/			Date (YYYY-MM-DD)	2006-07-05
First Name	Brian	Last Name	Ogonowsky	Registration Number	31988

This collection of information is required by 37 CFR 1.76. The information is required to obtain or retain a benefit by the public which is to file (and by the USPTO to process) an application. Confidentiality is governed by 35 U.S.C. 122 and 37 CFR 1.14. This collection is estimated to take 23 minutes to complete, including gathering, preparing, and submitting the completed application data sheet form to the USPTO. Time will vary depending upon the individual case. Any comments on the amount of time you require to complete this form and/or suggestions for reducing this burden, should be sent to the Chief Information Officer, U.S. Patent and Trademark Office, U.S. Department of Commerce, P.O. Box 1450, Alexandria, VA 22313-1450. DO NOT SEND FEES OR COMPLETED FORMS TO THIS ADDRESS. **SEND TO: Commissioner for Patents, P.O. Box 1450, Alexandria, VA 22313-1450.**

TANDEM ACCESS CONTROLLER WITHIN THE PUBLIC SWITCHED TELEPHONE NETWORK

Samuel F. Wood
Jerry A. Klein
Margaret Susan Asprey

CROSS REFERENCE TO RELATED APPLICATIONS

This application is a continuation of U.S. Application Serial No. 10/426,279, filed April 30, 2003, entitled "Branch Calling and Caller ID Based Call Routing Telephone Features," which is a continuation-in-part of U.S. Application Serial No. 09/565,565, now Patent 6,574,328, filed May 4, 2000, entitled "Telephone Call Control System for the Public Switched Telephone Network," both documents being incorporated herein by reference.

FIELD OF THE INVENTION

This invention relates to telephone services and, in particular, to a system for allowing a subscriber to select features of the subscriber's telephone service and to various novel features that can be selected.

BACKGROUND

People have used various means for limiting interruptions due to the telephone. In the past, people used switchboards and secretaries to screen incoming, or inbound, calls. Voice mail systems took over some of this role both in the home and in the central office. Today, there are web-based companies managing 3rd-party call control, via the toll-switch network, which allow users to enter call control information through a web portal. There are also edge devices in each of the public telephone company's central offices which provide local control, but offer an extremely limited number of features and do not provide true 3rd-party call control.

Bright House Networks - Ex. 1008, Page 1725

The web-based toll systems provide good user interaction but they are not economical and cannot take advantage of local number portability because they do not provide local control and connectivity.

The Public Switched Telephone Network (PSTN) consists of a plurality of edge switches connected to telephones on one side and to a network of tandem switches on the other. The tandem switch network allows connectivity between all of the edge switches, and a signaling system is used by the PSTN to allow calling and to transmit both calling and called party identity.

Until now, optional features were provided by the local service telephone company (telco) through the edge switch at the central office (CO). It was not possible to provide optional features through any other means. Control of these features was done through the first party (calling party) or the second party (called party), or worse yet, manually by calling the business office.

In the past, numerous devices have been built that allow the connection of two lines together at an edge switch. These devices can be used to add features to a telephone network by receiving a call on one line and then dialing out on another line. The problem with these devices is that, because they are connected through an edge switch, transmission losses and impairments occur, degrading the overall connection. In addition, signalling limitations prevent full control, by the subscriber or the system, over the call.

A preferred embodiment of the inventive system described herein connects at the tandem, thereby eliminating these problems.

In the edge devices residing in the PSTN central offices, the 1st party (the calling party) has numerous features available (dialing options). The 2nd party (called party) also has options available such as call forwarding, but these features typically require access from the first or second party's device and are extremely awkward to program. The user interaction is not only awkward, it is limited and requires interaction with the telephone company to provision them. In other words, past systems for provisioning, meaning addition, modification, or control of telephone features, required a subscriber to make the feature selection through the telephone

Bright House Networks - Ex. 1008, Page 1726

business office. Central office workers would then implement the provisioning under request of the business office.

Call Forwarding is one popular provision. There is signification transmission degradation for Call Forwarding to take place. The calling party pays for a call to the edge device, and the edge subscriber, the called party, pays for the call to the forwarding number. For enhanced inbound call control to occur, a direct 3rd-party call control means is needed.

A variety of services have arisen to address the problems mentioned above. Many of these systems allow the called party to make changes to his/her call forwarding attributes which do not allow direct 3rd-party call control. These services provide good user interaction, some via the internet, but they rely upon the toll network through the use of "800" numbers.

This requires the subscriber to pay by the minute and does not allow the subscriber to take advantage of number portability in order to obtain 3rd-party call control. There are other toll network mechanisms for remote call forwarding. For example, MCI offers a service where the customer can remotely change the forwarding target number for "800" numbers. Contacting the ultimate end-user before terminating the first incoming call is similar to the manner in which "800" credit calls and collect calls are processed, but these are not done at the local subscriber level.

In addition to these toll services, there are edge devices that perform some of the same services. Edge devices such as phones and PBXs that include voice mail, inter-active voice response, call forwarding, speed calling, etc., have been used to provide additional call control. These devices allow the phone user direct control over incoming and outgoing calls. The disadvantage of edge devices is that they add cost, degrade voice and transmission quality, can be difficult to program, are not easily programmed remotely, can require the user to pay for two lines, provide lower quality of service, and cannot provide the same level of functionality as a system that controls the PSTN directly. There are Voice Over Internet Protocol (VoiP) products emerging that provide better user interfaces and control but they do not take advantage and voice quality of the PSTN.

Bright House Networks - Ex. 1008, Page 1727

SUMMARY

A system for allowing a subscriber to remotely control features is described herein along with various telephone features that may be programmed into the system. A subscriber may be any customer using the telephone service, in contrast to employees of the PSTN who may use special communication networks within the PSTN.

The present invention adds direct control of third party call control features, but does not suffer from any of the disadvantages listed above, and allows the subscriber to manage his/her telephone system in a dynamic and exceptionally useful manner that is not currently available through the existing PSTN. The invention allows enhanced direct third-party call control features, such as selective call routing and remote dialing, to be added to the PSTN (Public Switched Telephone Network) using local call control and providing dynamic provisioning of the system by the subscriber. Direct 3rd-party control means that the ability to provision the 3rd-party features is directly available to a subscriber, eliminating the need to go through the telephone company (telco) business office.

In one embodiment, the system includes a processor, referred to herein as a tandem access controller (TAC), connected to the PSTN, where the TAC allows a subscriber to set-up and make immediate changes to the configuration of his or her phone line or other communications device. In one embodiment, the TAC subsystem is connected internally to the PSTN in a local service area and is outside the central office of the subscriber. A calling party makes a first call to the subscriber using the subscriber's public telephone number. The TAC receives the first call prior to the call reaching the subscriber's terminating central office, which in some cases avoids a toll. The TAC then carries out the subscriber's instructions for the first call, such as making one or more second calls using telephone numbers different from the subscriber's public telephone number. When the second call is answered, the answering phone is connected by the TAC to the caller.

The TAC provides features, selected by the subscriber, to all edge switches connected to the PSTN tandem switch. Connecting directly to the PSTN tandem switch (or embedding the system into the tandem switch) eliminates the signal degradation problems previously described.

Bright House Networks - Ex. 1008, Page 1728

In one embodiment, the system allows provisioning of features via the internet under direct control of the subscriber. Recently, several products have been introduced that provide a means of controlling features via the public internet. However, all these devices fall short in that they require the subscriber to obtain an "800" number or some other number that requires the subscriber to pay a toll charge each time a call is made. The present invention connects locally, so no toll charges are incurred.

The web-enhanced services in one embodiment of the invention coexist with and overlay the local phone service at the local level, thereby providing good economics and user interaction, single number access to multiple subscriber devices, connectivity without transmission impairments and true, direct 3rd-party call control.

The present invention relies upon use of local telephone facilities thereby eliminating all the extra charges associated with making toll calls. It also allows the user to take advantage of number portability and keep his/her existing public phone number.

Examples of two features that may be performed by the TAC are caller ID (CID) based call routing and branch calling. The system allows the subscriber to set up a feature where the CID signal is detected within the PSTN and automatically associated with stored information relating to the caller. The stored information may have been previously entered into a memory within the PSTN by the subscriber via the world wide web. The CID signal may be also used to route the call to one of more forwarding numbers or to take any other action, such as blocking the call. This feature also allows the subscriber to use the CID signal to display certain information even though the caller may have her CID blocked.

Another feature described herein is referred to as branch calling, which allows a call to be forwarded to multiple telephones simultaneously, where the first telephone answered terminates the calling of the other telephones (or any other end units).

The offered features are implemented by software programs run by the processing system.

The web-enhanced services in one embodiment of the invention coexist with and overlay the local phone service at the local level, thereby providing good economics and user

Bright House Networks - Ex. 1008, Page 1729

interaction, single number access to multiple subscriber devices, connectivity without transmission impairments and true, direct 3rd-party call control.

The present system relies upon use of local telephone facilities thereby eliminating all the extra charges associated with making toll calls. It also allows the user to take advantage of number portability and keep his/her existing public phone number.

BRIEF DESCRIPTION OF THE DRAWINGS

Fig. 1 illustrates the tandem access controller (TAC) in one embodiment of the present invention connected to the existing PSTN tandem switch, the TAC providing features for the subscriber's telephone as requested by the subscriber via the web.

Fig. 2 illustrates a system similar to Fig. 1 but showing multiple tandem switches and TACs and also showing how the subscriber may, in additional to using the standard telephone, make phone calls using Voice Over IP via a conventional digital telephone.

Fig. 3 is a flowchart of one method that a person may use to set up a subscriber account and to designate features the subscriber would like for his/her telephone.

Fig. 4 is a flowchart of a method that can be performed by the TAC in response to the subscriber (or other service) controlling the TAC, using the web (or other packet-based system), to change the subscriber's telephone provisioning or perform another function, such as make a VoIP call.

Fig. 5 is a flowchart of a method that can be performed by the TAC in response to an inbound call to the subscriber.

Fig. 6 is a flowchart of a method performed by the subscriber and the TAC when the subscriber desires to make an outbound call via the web or using a conventional telephone.

Fig. 7 illustrates a system, using the TAC, that allows wireless cell phones to obtain the same provisioning options as the conventional telephones.

Bright House Networks - Ex. 1008, Page 1730

Fig. 8 illustrates a system, using the TAC, that allows fax and modem calls to benefit from the provisioning offered by the TAC.

Fig. 9 is a flowchart of possible scenarios using the caller ID based feature.

Fig. 10 is a flowchart of possible scenarios using the branch calling feature.

DETAILED DESCRIPTION OF THE EMBODIMENTS

Fig. 1 shows a tandem access controller (TAC) 10 that allows an authorized subscriber 12 to establish 3rd-party control criteria for calls to the subscriber's telephone 14 (having a "public" phone number that callers dial). In one embodiment, the TAC 10 is a programmed processor. The TAC 10 may use any combination of hardware, firmware, or software and, in one embodiment, is a conventional computer programmed to carry out the functions described herein.

The TAC 10 is connected to or inside the conventional PSTN tandem switch 16 such that calls may flow through the TAC 10 in the same manner as the existing PSTN tandem switch, except that additional 3rd-party features are applied to the call. As is well known, PSTN tandem switches are exchanges that direct telephone calls (or other traffic) to central offices 17,18 or to other tandem switches. Details of the operation of the existing phone network may be found in the publication entitled "New Net SS7 Tutorial," by ADC Telecommunications, copyright 1999, incorporated herein by reference. Additional details may be found in the numerous books describing the PSTN.

The PSTN tandem switch 16 directs a first call (from the calling party 20 to the subscriber's phone 14 using the subscriber's public phone number) to the TAC 10, which in turn places a second call, subject to 3rd-party control information, to the subscriber's "private" phone number without yet terminating the first call. The TAC 10 is connected within the subscriber's local service area so calls from TAC 10 to the subscriber do not incur a toll. When the subscriber 12 terminates (or answers) the second call, the TAC 10 terminates the first call and connects it to the second call, thereby connecting the calling party 20 to the subscriber 12. Hence, the calling party essentially calls the TAC 10, using the subscriber's public phone number, and the TAC 10, after processing the call using the selected features, calls the

Bright House Networks - Ex. 1008, Page 1731

subscriber, as appropriate, using the subscriber's private phone number and connects the two calls. The process is transparent to the parties.

The TAC 10 is connected inside the PSTN in the sense that it is not an edge device such as a PBX or central office (CO) switch because it does not connect directly to subscribers. Rather, it redirects calls to subscribers. The TAC 10 provides intelligent interconnection between a calling party and a subscriber.

The reader should keep in mind that although only one tandem switch 16 is shown in Fig. 1, the invention will apply equally well to a network of tandem switches, as shown in Fig. 2. Fig. 2 also illustrates how the subscriber can make calls using voice over IP via a conventional digital telephone 21.

Fig. 1 illustrates the preferred method for an authorized subscriber to modify the 3rd-party control criteria by means of the world wide web 22 (and web server 23) using an internet browser. By "authorized" we mean a subscriber who is registered and has logged- in with appropriate security and password controls. The subscriber 12 interacts with the web 22 via the Internet to quickly and easily specify the enhanced 3rd-party call control features. Web 22 then relays this information, in appropriate form, to the TAC 10. Preferably, the link to the TAC 10 uses a secure protocol. Examples of features that can be selected by the subscriber include: conditional call blocking, call forwarding, call altering, time of day conditions, day of week conditions, follow-me, caller recognition/password, caller ID, call screening/retrieval from voice mail, speed dialing, interactive voice response, and speech recognition. Any other feature could be added. These features can be implemented in the TAC 10 using known software techniques since such features are known. Message outgoing call control includes: click-to-dial calling and group calling/messaging.

The invention may also include ivr/vm/voverip.

Fig. 1 uses a public internet portal connected via a data link to the TAC 10 or other interface system. As a registered subscriber, a user logs onto the portal (Fig. 3) and is granted access, allowing the user to make additions or changes to features such as speed calling, call forwarding, selection of such descriptors as time of day, busy status, caller ID status, etc. A

Bright House Networks - Ex. 1008, Page 1732

user-friendly web page leads the subscriber through the various procedures and available features. The selections made by the subscriber are translated into provisioning data and transmitted to the TAC 10. The TAC 10 in turn keeps track of incoming and outgoing calls based on this information.

The subscriber can also program a set of the call control features via a telephone link in the event a data link connection is unavailable.

Fig. 4 is a flowchart of actions that may be taken by the TAC 10 in response to the subscriber (or other service) controlling the TAC, using the web or other packet-based system, to change the subscriber's telephone provisioning or perform another function, such as make a VoIP call.

Fig. 5 is a flowchart of actions taken by the TAC 10 in response to an inbound call (using the subscriber's public phone number) to the subscriber. Examples of some of the actions taken by the TAC 10 are:

Receives SS7 data indicating an incoming call

Stores phone numbers downloaded from provisioning system

Charts identity of calling party

Checks time of day

Stores lists of numbers in groups used for processing incoming calls

Places outgoing calls in response to incoming calls according to information downloaded on the data link.

Incoming call data is received by the TAC 10 from the tandem switch 16. The TAC 10 processor checks calling and called numbers, class of service, time of day, number lists, etc. In some cases additional data is gathered from the calling party via a DSP (Digital Signal Processing) system and stored in the system memory. The DSP system is used to play call progress tones and voice announcements as required. Voice announcements can be played through the DSP system. In response to the call data, an outgoing call to the subscriber 12 may

Bright House Networks - Ex. 1008, Page 1733

be placed back through the tandem switch 16 by TAC 10. The TAC 10 links the two calls and monitors the connection.

Information about the call may be collected by the TAC 10 and sent to the subscriber or a 3rd party for display. Such information may be the length of the call or information used to bill the subscriber for the use of the system. The provisioning system can also collect control information from a 3rd party and relay it back to the TAC 10, which will then affect the call accordingly.

Fig. 6 is a flowchart of actions taken by the subscriber 12 and the TAC 10 when the subscriber desires to make an outbound call via the web or using a conventional telephone. When using the web to place a call, the subscriber may simply click a name on the computer screen 26 using a mouse.

Fig. 7 illustrates a system, using the TAC 10, that allows wireless cell phones 28 to obtain the same provisioning options as the conventional telephones 14. A local cell 30 and a cell switch 32 are also shown in Fig. 7.

Fig. 8 illustrates a system, using the TAC 10, that allows fax and modem calls to benefit from the provisioning offered by the TAC 10. The TAC 10 may interface the ISP 36 through the web 22.

One embodiment of the invention allows a subscriber to view the current state of his/her telephone via the Internet. Internet is a term of art by which we mean an interconnection of packet switched networks. Prior to this system there was no way for a user to examine the status of a telephone line. Recently, several products have been introduced that provide a means of examining the voice message boxes.

An internet portal is connected via a data link to the TAC 10. When a user logs onto the internet portal and is granted access to an individual subscription, the user can examine the status of calls/features. This information is transmitted from the TAC 10 to the web portal and translated into user viewables. The TAC 10 keeps track of incoming and outgoing calls based on this information.

Bright House Networks - Ex. 1008, Page 1734

The TAC 10 may be implemented using conventional processor hardware. The connection to the tandem switch 16 may be as simple as a telephone circuit, since the TAC 10 receives an incoming call from a caller and processes the call. Devising the software/firmware use to control the TAC 10 is well within the capability of those skilled in the art since the various control features that can be made available are generally already known.

Certain advantages that can be obtained using the invention include the following:

Web-Based Telecom Navigator

Manage Incoming Call Control

- Conditional Call Blocking/Forwarding/Alerting
- Time-of-Day, Day-of-Week, Follow-Me, Caller Recognition/Password, Caller ID, etc.
- Call Screening/Retrieval from Voice Mail
- Interactive Voice Response and Speech Recognition

Manage Outgoing Call Control

- Click-to-Dial Calling
- Group Calling and Messaging

Web-Based Billing

Web-Driven Personal Communications Management

Cost-Effective Single Phone Number Access

On-Line "Personal Digital Assistant"

On-Line "Telcom Navigator"

Inspired User Interaction

Secure and Reliable Technology

Bright House Networks - Ex. 1008, Page 1735

Cost-Effective Single Phone Number Access

CLEC Status

- Free Local Calls, Incoming Calls (not 800 Toll Service)
- Retain Current Number (Local Number Portability)
- Low-Cost Calling Throughout LATA
- Flat-Rate Foreign Exchange
- Single Installation Covers Entire LATA
- VoIP Toll-Bypass

Compatible With Existing Devices, Standards

- Standard DTMF and VoIP Phones
- Wireless Phones
- Standard Wired/Wireless and PIM Browsers

Web-Based Personal Digital Assistant

Centralized and Consistent Personal Data

- Build Once, Use Anywhere
- Private/Public Phone Directories and Calendars
- "Post-It" Style Annotation of Numbers

Web Dialing

- Click-to-Dial from Web Pages, Directories, Calendars
- Multiple Phone List Management

Bright House Networks - Ex. 1008, Page 1736

Unified Messaging

- Voice Mail Access, Prompts, Alert Via Web

User Interaction

Expected Behavior

- Compatible with Familiar Products (e.g. Palm Pilot)
- Commonality Between All Wired and Wireless

Mode-Based Definition and Selection

- Vacation, Dinner Time, Go Away, Family Call Waiting
- Templates

Learning Modes

- Persona-Based User Interaction Design
- Speech recognition
- Windows drag and drop

Automatic Data Capture

- Build Phone List Based on Collected Usage Information
- Drag and Drop Into Lists

Secure and Reliable Technology

Separate Web-Site and Link Gateway

- No Direct External Access to Gateway
- Additional Security Layer

Bright House Networks - Ex. 1008, Page 1737

- No Denial-of-Service to Voice Links

VoIP Link Degradation Detection

- Automatic Cutover to PSTN

E-Commerce Security

- Billing Encryption

Caller ID Based Call Routing

One advantage of using TAC 10 is its ability to enhance caller ID information. Caller ID is a common feature where a calling party's telephone number is transmitted to the called party's telephone so it can be displayed on a small display screen in the telephone. This caller ID information is provided by the calling party's central office switch. Signaling System No. 7 (SS7) is a global standard for telecommunications and defines the procedures and protocol by which network elements in the PSTN exchange information (including the caller ID) over the telephone network for call set up, routing, and control. In some telephone sets, including wireless telephones, the name of the caller associated with the telephone number is also displayed on the called party's display screen.

TAC 10 can use this automatically generated caller ID signal to provide an enhanced set of caller ID related features. One such feature is the association of the standard caller ID information with additional information about the caller stored in a memory addressed by TAC 10. The enhanced caller ID information provided through TAC 10 provides a valuable tool to the subscriber in handling incoming calls. The basic caller ID information, such as the caller's telephone number and name, can still be sent to the subscriber's phone and displayed in a conventional manner while the enhanced caller ID information may be displayed on the phone display or on the subscriber's computer monitor via the web.

The caller ID signals, pursuant to the SS7 protocol, are detected by TAC 10 when a calling party calls the subscriber using the subscriber's public telephone number, as previously described. TAC 10 then uses the basic caller ID data to address a look-up table (LUT)

Bright House Networks - Ex. 1008, Page 1738

containing any additional information that the subscriber has entered into the LUT's memory locations for association with that caller ID data. Fig. 8 shows such a LUT 40 within or connected to TAC 10.

In one example, the subscriber may identify a prospective calling party's telephone number to TAC 10 via the Internet and then associate the number with any other information for storing in LUT 40. Such other information may be all the possible callers using the calling telephone, personal information regarding the calling party, billing information, business information, account numbers, past discussions with the caller, or any other information. When TAC 10 detects the caller ID signals, TAC 10 addresses LUT 40 and downloads the retrieved information to the subscriber's telephone display or to the subscriber's computer via the web. Since TAC 10 (including LUT 40) stores this additional information, the subscriber is not required to personally provide processing or memory devices for this feature.

Multiple subscribers use the same TAC 10 and LUT 40 but only the memory locations in LUT 40 authorized for access by a particular subscriber are available to that subscriber.

A subscriber may program TAC 10 using the various means described previously to perform any number of features on an incoming telephone call based upon the caller ID data. Such features include forwarding a call associated with that particular caller ID data to one or more other telephones, or blocking calls associated with that particular caller ID data. Such calls may be forwarded or blocked only at certain times or on certain days as requested by the subscriber. All of the other features previously described may also be applied based upon the caller ID.

When the calling party elects to block her caller ID information, displaying the caller's number and name on the subscriber's telephone may violate the privacy act, so such a restriction should be programmed into the system. However, TAC 10 may still use the caller ID information for various legal purposes. For example, the subscriber may not wish to receive phone calls from a particular phone number or calling party. The subscriber may transmit to TAC 10 the caller ID information (e.g., the telephone number and/or the name) and instruct TAC 10 to either forward the call, block the call, or transmit any additional information from LUT 40 to the subscriber's phone display or computer monitor for screening the caller.

Bright House Networks - Ex. 1008, Page 1739

If caller ID information does not exist, such as where the local telephone company does not offer caller ID, TAC 10, when receiving the incoming call, can transmit an automatic message to the caller to enter identification information. TAC 10 then uses that information to address LUT 40 to identify any associated information in LUT 40 for transmission to the subscriber. TAC 10, in a recorded or simulated voice, can request the caller to enter her phone number via the telephone keypad. Alternatively, TAC can request that the caller speak her name or number, which would then be played to the subscriber or converted to text or a code by TAC 10 to address LUT 40. Alternatively, the caller can enter a personal identification number or any other type of code (e.g., the caller's name) via the keypad, which would identify the caller to TAC 10. Once obtained, the caller ID information entered can be used to route the incoming call via TAC 10 in any way programmed by the subscriber. Call routing can be based on time of day, the caller ID, any web input instructions, a direction by the calling party itself, or any other variable.

This technique is contrasted with 800-type services, which are reverse long distance services requiring the owner of the 800 number to pay for the incoming call. With 800 numbers, the caller ID must be unblocked to identify the amount of the toll. With the inventive technique, even blocked caller ID calls can result in information about the caller being transmitted to the subscriber or used by TAC 10 to selectively perform a function.

Fig. 9 is a flowchart of various scenarios that may be carried out using the caller ID feature.

In step 50 of Fig. 9, an incoming call is received by TAC 10, as previously described, by a calling party calling the subscriber's public telephone number. In all embodiments described herein, the end unit called may be a residential telephone or other communication device connected to the PSTN via a central office, such as a computer, fax machine, or other communication device. The services provided by TAC 10 may be for residential telephone service or for business telephone service.

In step 52, using the SS7 protocol, TAC 10 detects the caller ID signal (CID), if any. Even if the calling party has a blocked CID, the CID is still transmitted to TAC 10; however the blocked caller ID cannot be displayed on the called party's telephone. If the CID is detected,

Bright House Networks - Ex. 1008, Page 1740

the process continues to steps 54 and 56, which determine whether the CID is associated with any data in a look-up table. Existing data in the look-up table associated with the CID indicates that the caller is a previous caller. If caller ID information is known without ever previously receiving a call from that party, the additional information can still be entered into the look-up table, and the calling party will be treated as not a new caller in step 54.

Assuming the caller has information stored in the look-up table, this additional information is retrieved by TAC 10 and displayed on a web page (step 58) that is accessible by the subscriber via the web. In addition, the caller's name and telephone number may also by displayed (step 60). The information may also be transmitted to the subscriber's telephone for display.

In step 62, TAC 10 performs any programmed function on the call, such as forwarding the call to the subscriber's private telephone number or another number.

The placing of the second call by TAC 10 causes the called phone to ring (step 64) as well as causes the CID and additional information to be available to the subscriber (step 66) on the subscriber's telephone display. When the subscriber answers the phone, TAC 10 completes the connection between the two parties.

The retrieved information from LUT 40 that is transmitted over the web may appear as a screen pop-up on the subscriber's monitor. This CID information can then be reviewed and edited to include new information about the caller provided during the call. The subscriber then downloads this edited information to TAC 10 so future calls from the same caller would display the new information.

In step 54 if it is determined that the CID information is not associated with any existing information in the look-up table, TAC 10 determines whether the CID is blocked (identified in the SS7 protocol) in step 68. If the CID is not blocked, then the CID information is transmitted to the subscriber's telephone when TAC 10 places the call to the subscriber's private number (or any other forwarding number), and the CID is displayed on the subscriber's phone.

In step 68, if it is determined that the CID is blocked, TAC 10 will prompt the caller, via a recorded message or a simulated voice, to press the appropriate touch tone buttons to unblock

Bright House Networks - Ex. 1008, Page 1741

the CID (step 70). For example, TAC 10 may be programmed to detect that a "1" key is pressed by the caller to unblock CID and then treat the CID information as unblocked. Alternatively, the caller may be required to call back after pressing the proper touch tone keys to unblock the CID in a conventional way.

In step 72, if the CID is now unblocked, the CID is obtained from the caller in step 74. The process also goes to step 74 if, in step 52, the CID is not initially obtained.

In step 76, TAC 10 determines whether the CID signal has been provided by the calling party from either the automatic CID signals or from the caller manually entering the caller's telephone number, name, or PIN, as previously described. If yes, then in step 54 TAC 10 uses the CID information to determine whether the caller is a new caller, and the remainder of the process continues as previously described.

In step 72, if it is determined that the CID remains blocked after TAC 10 has prompted the caller to unblock the CID, then in step 74 it is determined by TAC 10 is step 77 (after reviewing the subscriber's programmed instructions) whether the subscriber is accepting blocked calls. If yes, TAC 10 then places a call to the subscriber's private number or any other number identified by the subscriber, and puts the blocked call through. The blocked CID information would not be transmitted to the subscriber's phone.

If the subscriber's instructions are to not accept blocked calls, then in step 78 the blocked call is not forwarded to the subscriber's phone, or the blocked call is sent to voice mail. Voice mail may be a memory internal to TAC 10, or TAC 10 may transmit a special code to the subscriber's phone that automatically causes the call to be routed to a private voice mail system.

As seen, as long as the caller ID data received by TAC 10 has information associated with it in the look-up table, the stored information can be transmitted to the subscriber even if the caller ID is blocked. Further, even blocked caller IDs can still be used by TAC 10 to perform a routing function on the call. The caller ID feature may be implemented by a software program run by the processing system in TAC 10.

Because the conventional blocked CID information provided by the phone company is never displayed to the subscriber, the tagging system does not violate the privacy act. Known

Bright House Networks - Ex. 1008, Page 1742

features such as call trace (where CID is provided to law enforcement people), or call return (where the blocked caller can be called back) have established a legal precedent that it is ok to use blocked CID information for certain purposes as long as the caller ID is not disclosed to the called party

Branch Calling

Branch calling is an enhanced telephone feature not believed to be provided on today's public telephone networks. This feature can be easily provided using TAC 10.

Branch calling is a technique where a caller places a first call intended for a called party to TAC 10. After receiving the call, TAC 10 looks up the call handling instructions programmed into TAC 10 by the subscriber via the web, via the telephone, or via any other technique. One set of these instructions is branch calling, which instructs TAC 10 to simultaneously call any number of different telephone numbers programmed into TAC 10 by the subscriber. The called phone numbers may be any combination of local, long distance, or cellular numbers.

When a party answers one of the ringing lines, the answering party is connected to the calling party, and the other calls are abandoned.

For branch calling to operate in the most desirable manner, the system must detect that a call has been answered in order to terminate the calls to the other telephones (or other end units). Accordingly, some form of answer supervision must be present. Answer supervision is implemented inside the PSTN but generally not available to private networks (e.g., PABXs). Since SS7 signaling supports answer supervision, it is easy for this branch calling feature to be provided through TAC 10 since TAC 10 is connected inside the PSTN.

Prior art systems without answer supervision must call each forwarding number sequentially, whereby after a certain number of preprogrammed rings, the calling stops and the next number is called until someone answers the phone. Because a ringing time-out must occur before the next call can be tried, an unrealistically long delay can occur before the call is placed

Bright House Networks - Ex. 1008, Page 1743

to the proper telephone and finally answered. In contrast, the present invention allows TAC 10 to ring all the numbers simultaneously so the call can be answered quickly.

It is desirable that the answer supervision signaling not be delayed so that the calling and called parties may be connected quickly when the call is answered and so that during the delay time two parties do not answer two different ringing phones.

Fig. 10 is a flowchart of some scenarios in branch calling, whereby an incoming call to TAC 10 causes TAC 10 to place at least two new calls simultaneously and, when one of these phones is answered, the remaining calls are abandoned.

In step 80 of Fig. 10, TAC 10 receives an incoming call.

In step 82, TAC 10 looks up the routing instructions for the DNIS (Dialed Number Identification Service) and caller ID (if any). The DNIS identifies the number that was called, and the caller ID (CID) identifies the calling telephone number and sometimes the caller. DNIS works by transmitting the touch tone digits to TAC 10. A subscriber for TAC 10 may program TAC 10, as previously described, to perform any number of functions based upon the DNIS number, the CID, the time of day, or based upon any other factor. Such instructions may be stored in a look-up table addressed by the subscriber's public phone number (identified by the DNIS number). Since multiple subscribers will be using the same TAC 10, TAC 10 needs to know what number was dialed in order to perform the function on the call selected by the subscriber.

In step 86, TAC 10 identifies the features to apply to the incoming call. If the instructions are to block the call, then TAC 10 blocks the call in step 87. In the present example, it is assumed that the feature the subscriber wants to apply is a branch calling feature where two telephone numbers are to be called by TAC 10.

In step 88, TAC 10 generates a ring back tone to the caller to indicate that a telephone is ringing.

Bright House Networks - Ex. 1008, Page 1744

In step 90, TAC 10 places a call to a first telephone number, which causes the called phone to ring (step 92). Parallel operations are performed for a second phone number in steps 93 and 95.

In step 96, it is determined by TAC 10 whether the first phone has been answered using answer supervision signaling provided by SS7 (step 98).

In response to the answer supervision signaling, TAC 10 abandons the other call to the second telephone (step 100).

In step 102, TAC 10 completes the phone call by connecting the calling party to the answered telephone. This process may be applied to other than telephones, such as computers or other types of communication equipment.

In step 96, if the call is not answered after the ring, it is determined whether the other telephone has been answered (step 104). If not, the two phones continue to ring.

If it is determined in step 104 that another telephone has been answered (i.e., the answer supervision signal has been received by TAC 10), the call to the first telephone is abandoned (step 106).

The same operation is performed with respect to the second telephone call in steps 108-112.

Any number of telephone calls may be simultaneously placed by TAC 10 in response to a branch calling instruction.

In step 86, if the instructions programmed by the subscriber are to block the call, then TAC 10 blocks the call in step 116.

While particular embodiments of the present invention have been shown and described, it will be obvious to those skilled in the art that changes and modifications may be made without departing from this invention in its broader aspects and, therefore, the appended claims are to encompass within their scope all such changes and modifications that fall within the true spirit and scope of this invention.

Bright House Networks - Ex. 1008, Page 1745

CLAIMS

What is claimed is:

1. A method performed by a user of a public switched telephone network (PSTN), said user having a communications device, said method comprising:

accessing a remote tandem access controller (TAC) via the Internet by said user, said TAC being within the PSTN and coupled to a PSTN tandem switch for a local service area with respect to said user, said TAC for processing incoming calls from a calling party, via said tandem switch, intended by said calling party to be received by said user's communications device;

selecting features by the user via the Internet to be applied by said TAC to said incoming calls,

wherein said TAC receives a first call from a calling party intended for said user's communication device and processes said first call in accordance with said features prior to the first call reaching a terminating central office, said method performed by said user further comprising:

receiving a second call by said user from said TAC, via said tandem switch, after said first call has been processed by said TAC in accordance with said features selected and without the first call reaching the terminating central office; and

answering said second call to cause said TAC to complete a communications link between said calling party and said user.

2. The method of claim 1 wherein said TAC receiving a first call from said calling party comprises said calling party calling a first telephone number, and said receiving a second call from said TAC comprises said TAC placing said second call to a communications device designated by said user using a second telephone number.

Bright House Networks - Ex. 1008, Page 1746

3. The method of claim 1 wherein said user's communications device is a telephone, and wherein answering said second call causes said TAC to connect a calling party's communication device to said user's telephone.

4. The method of claim 1 wherein said user's communications device is a telephone, and wherein answering said second call causes said TAC to connect a calling party's communication device to other than said user's telephone, as designated by said user during said step of selecting features.

5. The method of claim 1 wherein said user's communications device is a computer, and wherein answering said second call causes said TAC to connect a calling party's communication device to said user's computer.

6. The method of claim 1 wherein said first call is placed by said calling party through a PSTN central office to said TAC, and said second call is a non-toll call placed by said TAC through a central office to said user's communications device.

7. The method of claim 1 wherein said features are selected from the one of:

a) selective call forwarding wherein said second call is to a particular communications device is based on one of a time of said first call and the party making the first call; and

b) conditional call blocking.

8. The method of claim 1 wherein said TAC receiving a first call from a calling party comprises receiving said first call via said tandem switch in said PSTN.

9. The method of claim 1 further comprising accessing said TAC by said user via the Internet to obtain information regarding calls received and placed by said user.

10. The method of claim 1 further comprising:

accessing said TAC to place a call by said user to a third party, said TAC placing said call to said third party; and

Bright House Networks - Ex. 1008, Page 1747

communicating with said third party after said TAC connects said user's communications device to a communications device of said third party.

11. The method of claim 1 wherein said accessing said TAC comprises using the Internet to communicate a telephone number to said TAC for placing a call to said third party.

12. The method of claim 1, wherein the selection of features to be applied to said TAC to one of an incoming and an outgoing call are selected by the subscriber via the Internet using one of a computing device, a wireless device, a cellular device, a personal digital assistant (PDA), and an information appliance; and wherein said function selected by said subscriber comprises at least one of:

Web-Based Telecom Navigator;
Manage Incoming Call Control;
Conditional Call Blocking/Forwarding/Alerting;
Call Screening/Retrieval from Voice Mail;
Interactive Voice Response and Speech Recognition;
Manage Outgoing Call Control;
Click-to-Dial Calling;
Group Calling and Messaging;
Web-Based Billing;
Cost-Effective Single Phone Number Access;
Free Local Calls, Incoming Calls (not 800 Toll Service);
Retain Current Number (Local Number Portability);
Low-Cost Calling Throughout LATA;
Flat-Rate Foreign Exchange;
Standard DTMF and VoIP Phones;
Centralized and Consistent Personal Data;
Private/Public Phone Directories and Calendars;
"Post-It" Style Annotation of Numbers;
Web Dialing;
Click-to-Dial from Web Pages, Directories, Calendars;

Bright House Networks - Ex. 1008, Page 1748

Multiple Phone List Management;

Voice Mail Access, Prompts, Alert Via Web;

Mode-Based Definition and Selection, comprising Time-of-Day, Day-of-Week, Follow-Me, Caller Recognition/Password, Caller ID, Vacation, Dinner Time, Go Away, Family Call Waiting;

Learning Modes;

Automatic Data Capture;

Build Phone List Based on Collected Usage Information;

VoIP Link Degradation Detection; and

Automatic Cutover to PSTN.

13. A method performed by a processor coupled to a public switched telephone network (PSTN) tandem switch and within the PSTN comprising:

receiving a first call through said tandem switch from a calling party intended for a subscriber after said calling party has entered a first telephone number, said first telephone number being said subscriber's public telephone number, said processor applying features selected by said subscriber to said first call prior to the first call reaching a terminating central office;

placing a second call to said subscriber using a second telephone number different from said first telephone number, said second call being a non-toll call to said subscriber, said processor completing a communications path between said calling party and said subscriber after said subscriber has received said second call; and

activating features selected by said subscriber via the Internet to be applied to a call intended for said subscriber.

14. The method of claim 13 further comprising connecting a calling party's communication device to other than said subscriber's telephone, as designated by said subscriber pursuant to said features selected by said subscriber, after said subscriber has answered said second call.

Bright House Networks - Ex. 1008, Page 1749

15. The method of claim 13 wherein said first call is placed by said calling party through a PSTN central office to said processor, and said second call is placed by said processor through a central office.

16. The method of claim 13 wherein said features are selected from:

a) one of selective call forwarding wherein said second call to a particular communications device is based on one of a time of said first call and the particular calling party making said first call; and

b) conditional call blocking.

17. The method of claim 13 further comprising:

receiving a local third call by said processor, via said tandem switch, placed by said subscriber for a third party, said processor placing a fourth call to said third party, via said tandem switch; and

connecting said subscriber to said third party after said third party receives said fourth call.

18. The method of claim 13, wherein the selection of features to be applied to said TAC to one of an incoming and an outgoing call are selected by the subscriber via the Internet using one of a computing device, a wireless device, a cellular device, a personal digital assistant (PDA), and an information appliance; and wherein said function selected by said subscriber comprises at least one of:

Web-Based Telecom Navigator;
Manage Incoming Call Control;
Conditional Call Blocking/Forwarding/Alerting;
Call Screening/Retrieval from Voice Mail;
Interactive Voice Response and Speech Recognition;
Manage Outgoing Call Control;
Click-to-Dial Calling;
Group Calling and Messaging;

Bright House Networks - Ex. 1008, Page 1750

Web-Based Billing;

Cost-Effective Single Phone Number Access;

Free Local Calls, Incoming Calls (not 800 Toll Service);

Retain Current Number (Local Number Portability);

Low-Cost Calling Throughout LATA;

Flat-Rate Foreign Exchange;

Standard DTMF and VoIP Phones;

Centralized and Consistent Personal Data;

Private/Public Phone Directories and Calendars;

"Post-It" Style Annotation of Numbers;

Web Dialing;

Click-to-Dial from Web Pages, Directories, Calendars;

Multiple Phone List Management; Voice Mail Access, Prompts, Alert Via Web;

Mode-Based Definition and Selection, comprising Time-of-Day, Day-of-Week, Follow-Me, Caller Recognition/Password, Caller ID, Vacation, Dinner Time, Go Away, Family Call Waiting;

Learning Modes;

Automatic Data Capture;

Build Phone List Based on Collected Usage Information;

VoIP Link Degradation Detection; and

Automatic Cutover to PSTN.

19. A method of placing and receiving telephone calls through a public switched telephone network (PSTN) tandem switch and within the PSTN comprising the steps of:

receiving a first call from a tandem access controller (TAC) through said tandem switch from a calling party intended for a subscriber after said calling party has entered a first telephone number, said first telephone number being said subscriber's public telephone number, said TAC being in a local service area with respect to said subscriber, said TAC receiving the first call prior to the first call reaching a terminating central office;

Bright House Networks - Ex. 1008, Page 1751

activating features, selected by said subscriber via the Internet, to said first call prior to the first call reaching a terminating central office;

placing a second call to said subscriber using a second telephone number different from said first telephone number, said second call being a non-toll call to said subscriber; and

completing a communications path between said calling party and said subscriber after said subscriber has received said second call.

20. The method of claim 19 wherein answering said second call causes said TAC to connect a calling party's communication device to other than said subscriber's telephone, as designated by said subscriber pursuant to said features selected by said subscriber.

21. The method of claim 19 wherein:

said first call is placed by said calling party through a PSTN central office to said TAC; and

said second call is placed by said TAC through a terminating central office.

22. The method of claim 19 wherein said features are selected from one of:

a) selective call forward wherein said second call is made to a particular communications device based on one of a time of first call and the particular calling party making said first call; and

b) conditional call blocking.

23. The method of claim 19 comprising said further steps of:

receiving a local third call at said TAC, via said tandem switch, placed by said subscriber for a third party,

placing a fourth call through said TAC to said third party, via said tandem switch; and

connecting said subscriber through said TAC to said third party after said third party receives said fourth call.

Bright House Networks - Ex. 1008, Page 1752

24. The method of claim 19 wherein said function selected by said subscriber comprises at least one of:

Web-Based Telecom Navigator;
Manage Incoming Call Control;
Conditional Call Blocking/Forwarding/Alerting;
Call Screening/Retrieval from Voice Mail;
Interactive Voice Response and Speech Recognition;
Manage Outgoing Call Control;
Click-to-Dial Calling;
Group Calling and Messaging;
Web-Based Billing;
Cost-Effective Single Phone Number Access;
Free Local Calls, Incoming Calls (not 800 Toll Service);
Retain Current Number (Local Number Portability);
Low-Cost Calling Throughout LATA;
Flat-Rate Foreign Exchange;
Standard DTMF and VoIP Phones;
Centralized and Consistent Personal Data;
Private/Public Phone Directories and Calendars;
"Post-It" Style Annotation of Numbers;
Web Dialing;
Click-to-Dial from Web Pages, Directories, Calendars;
Multiple Phone List Management;
Voice Mail Access, Prompts, Alert Via Web;
Mode-Based Definition and Selection, comprising Time-of-Day, Day-of-Week, Follow-Me, Caller Recognition/Password, Caller ID, Vacation, Dinner Time, Go Away, Family Call Waiting;
Learning Modes;
Automatic Data Capture;
Build Phone List Based on Collected Usage Information;

Bright House Networks - Ex. 1008, Page 1753

VoIP Link Degradation Detection; and

Automatic Cutover to PSTN.

Bright House Networks - Ex. 1008, Page 1754

TANDEM ACCESS CONTROLLER WITHIN THE PUBLIC SWITCHED TELEPHONE NETWORK

ABSTRACT OF THE DISCLOSURE

In one embodiment, the system includes a processor, referred to herein as a tandem access controller (TAC), coupled to the PSTN, where the TAC allows a subscriber to set-up and make changes to the configuration of his or her phone line or other communications device. Such changes include selective call forwarding. In one embodiment, the TAC is controlled by the subscriber using the web. The TAC is coupled internally to the PSTN in a local service area and is outside the central office of the subscriber. A calling party makes a first call to the subscriber using the subscriber's public telephone number. The TAC receives the first call prior to the call reaching the subscriber's terminating central office, which in some cases avoids a toll. The TAC then carries out the subscriber's instructions for the first call, such as making one or more second calls using telephone numbers different from the subscriber's public telephone number. When the second call is answered, the answering phone is connected by the TAC to the caller.

Bright House Networks - Ex. 1008, Page 1755

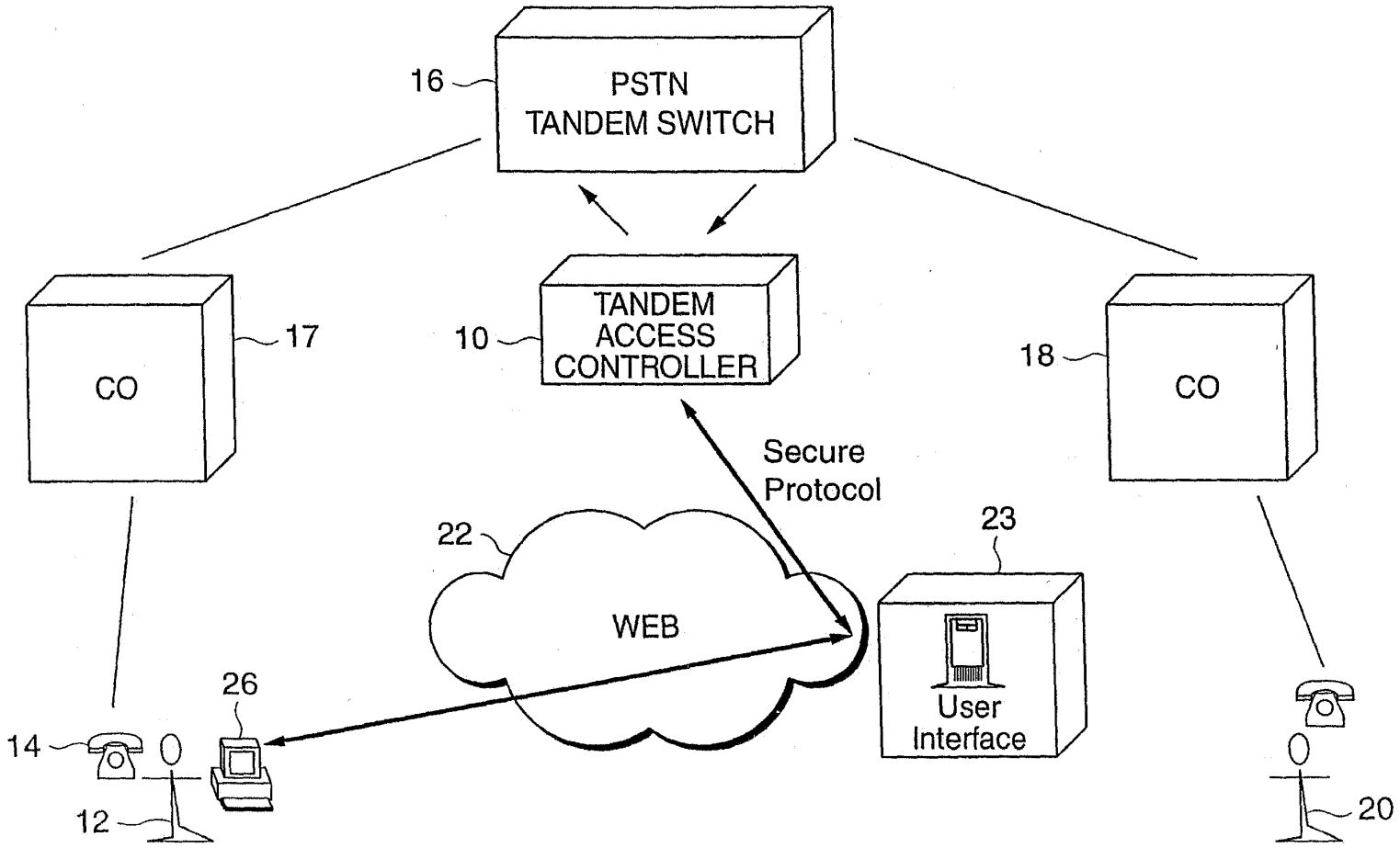
16
PSTN
TANDEM SWITCH
CO
17
10
TANDEM
ACCESS
CONTROLLER
18
CO
Secure
Protocol
22
WEB
23
User
Interface
26
14
12
20

FIG. 1

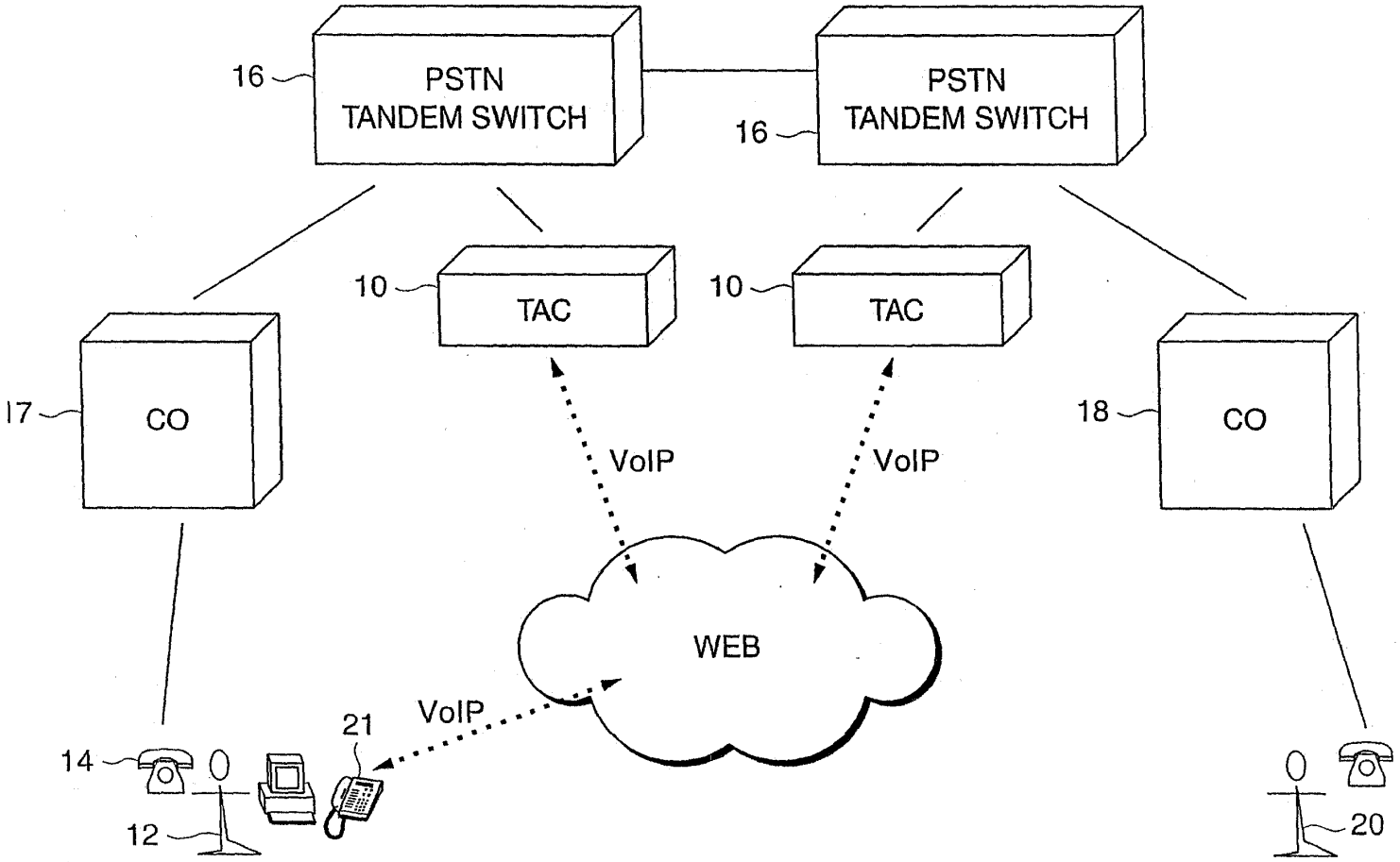
16
PSTN
TANDEM SWITCH
16
PSTN
TANDEM SWITCH
10
TAC
10
TAC
17
CO
18
CO
VoIP
VoIP
WEB
VoIP
21
14
12
20

FIG. 2

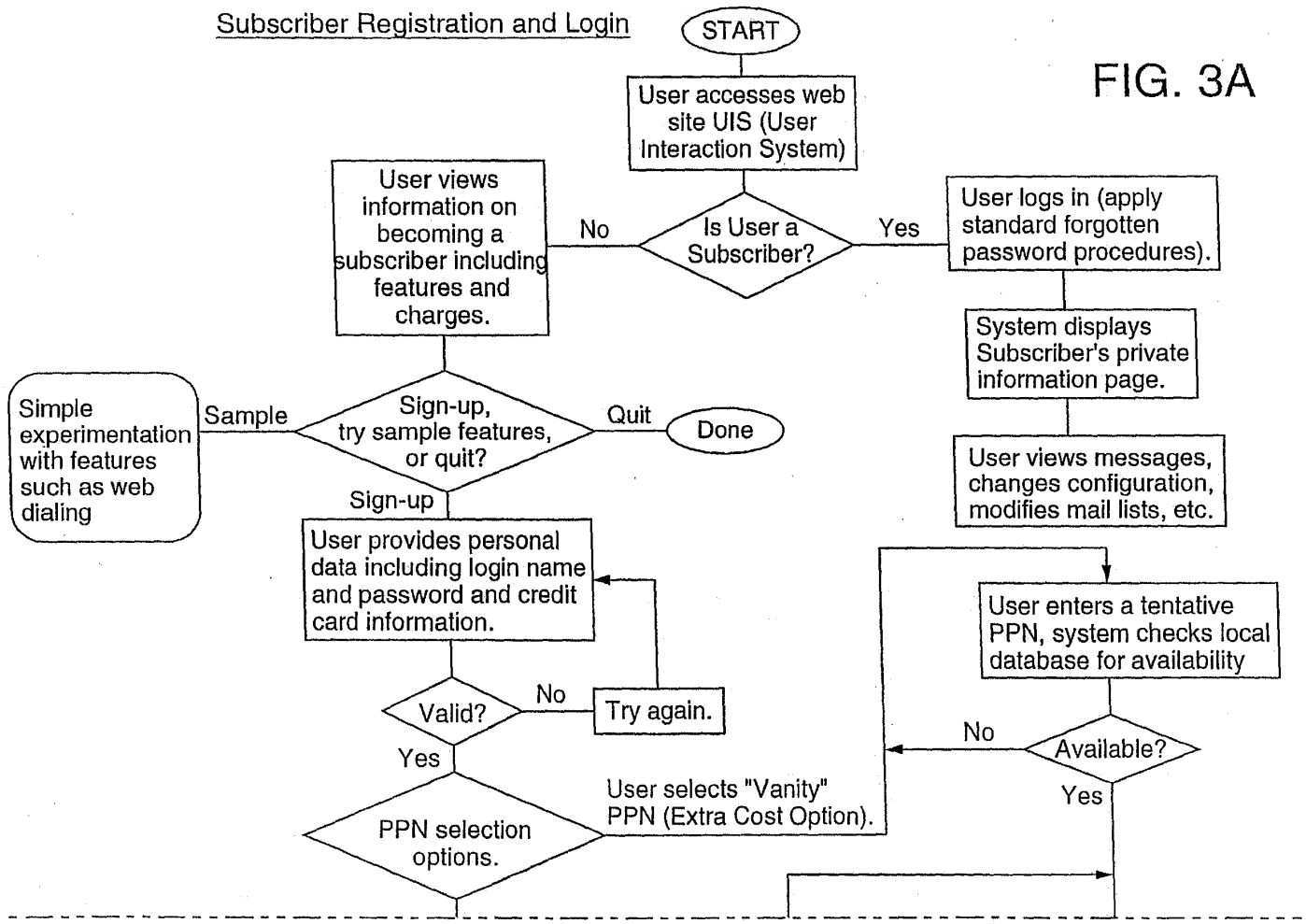
Subscriber Registration and Login
START
User accesses web site UIS (User Interaction System)
Is User a Subscriber?
No
Yes
User views information on becoming a subscriber including features and charges.
User logs in (apply standard forgotten password procedures).
System displays Subscriber's private information page.
User views messages, changes configuration, modifies mail lists, etc.
Simple experimentation with features such as web dialing
Sample
Sign-up, try sample features, or quit?
Quit
Done
Sign-up
User provides personal data including login name and password and credit card information.
Valid?
No
Try again.
Yes
PPN selection options.
User selects "Vanity" PPN (Extra Cost Option).
User enters a tentative PPN, system checks local database for availability
Available?
No
Yes

FIG. 3A

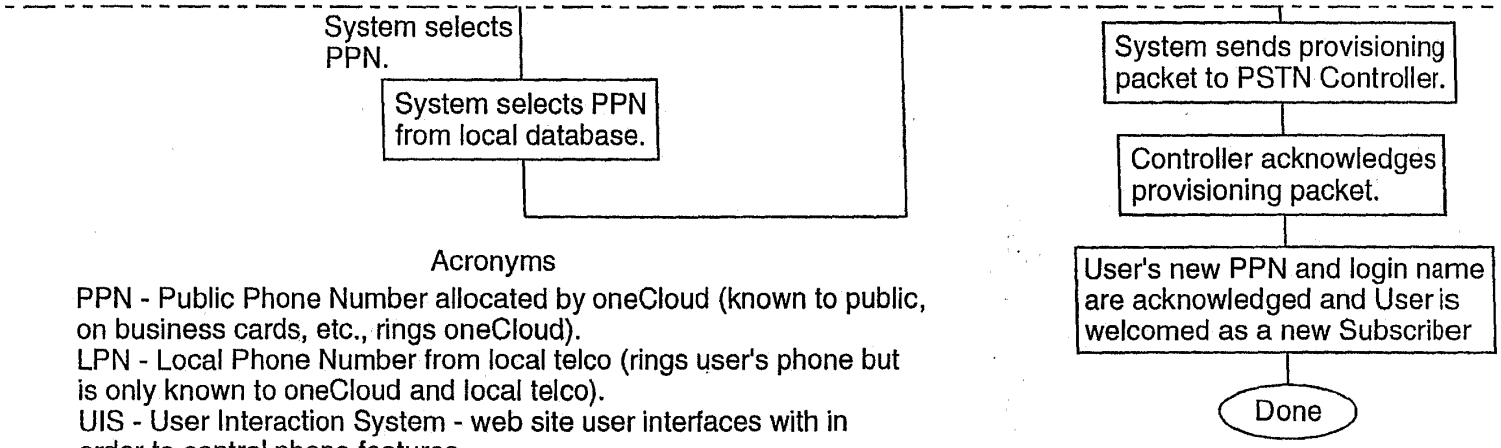

Acronyms

PPN - Public Phone Number allocated by oneCloud (known to public, on business cards, etc., rings oneCloud).
LPN - Local Phone Number from local telco (rings user's phone but is only known to oneCloud and local telco).
UIS - User Interaction System - web site user interfaces with in order to control phone features.
TAC - Tandem Acces Controller - System that directly accesses the PSTN.

FIG. 3B

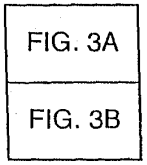

FIG. 3

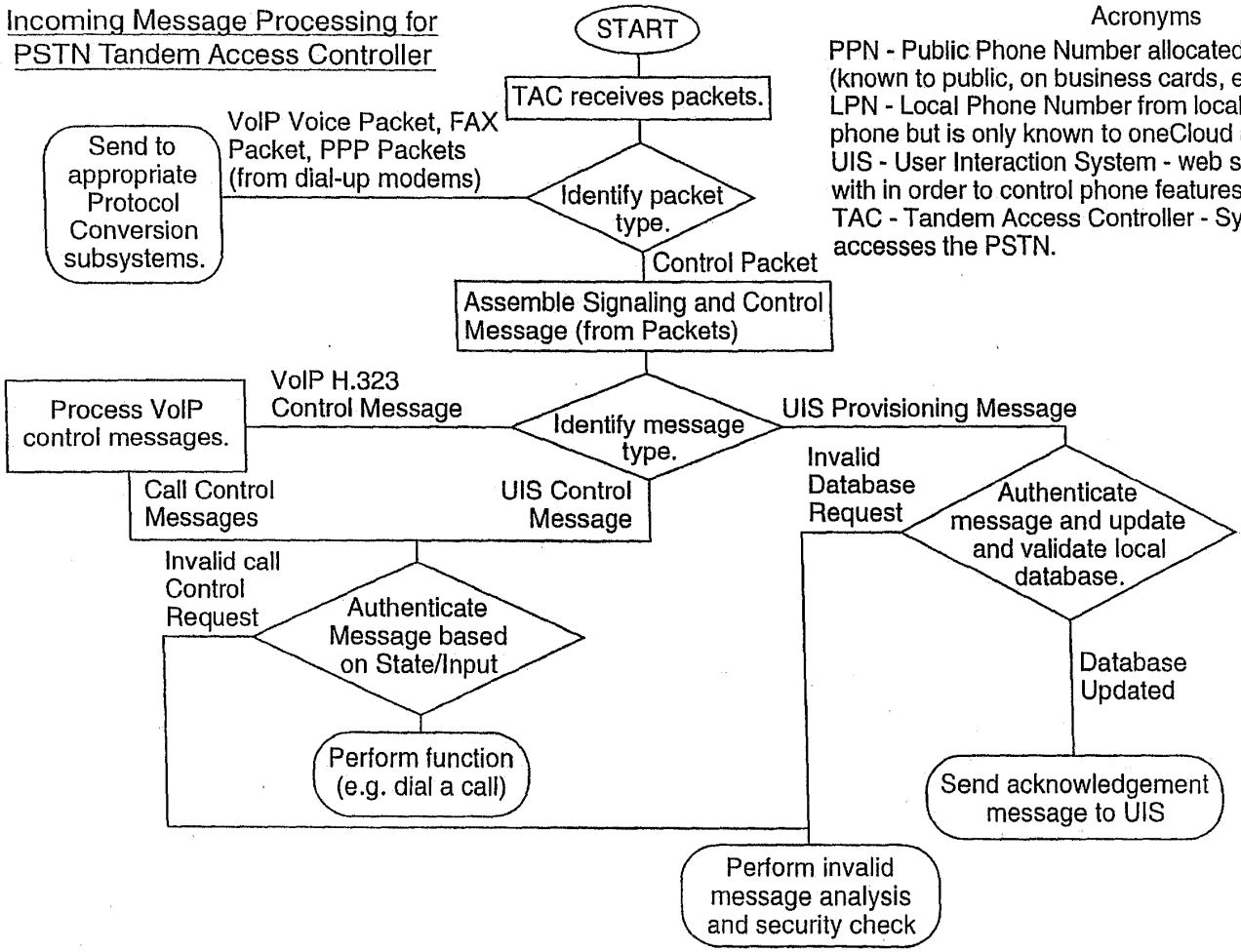
Incoming Message Processing for PSTN Tandem Access Controller
START
TAC receives packets.
Identify packet type.
VoIP Voice Packet, FAX Packet, PPP Packets (from dial-up modems)
Send to appropriate Protocol Conversion subsystems.
Control Packet
Assemble Signaling and Control Message (from Packets)
Identify message type.
VoIP H.323 Control Message
Process VoIP control messages.
UIS Provisioning Message
Call Control Messages
UIS Control Message
Invalid call Control Request
Authenticate Message based on State/Input
Perform function (e.g. dial a call)
Invalid Database Request
Authenticate message and update and validate local database.
Database Updated
Send acknowledgement message to UIS
Perform invalid message analysis and security check
Acronyms
PPN - Public Phone Number allocated by oneCloud (known to public, on business cards, etc., rings oneCloud).
LPN - Local Phone Number from local telco (rings user's phone but is only known to oneCloud and local telco).
UIS - User Interaction System - web site user interfaces with in order to control phone features.
TAC - Tandem Access Controller - System that directly accesses the PSTN.

FIG. 4

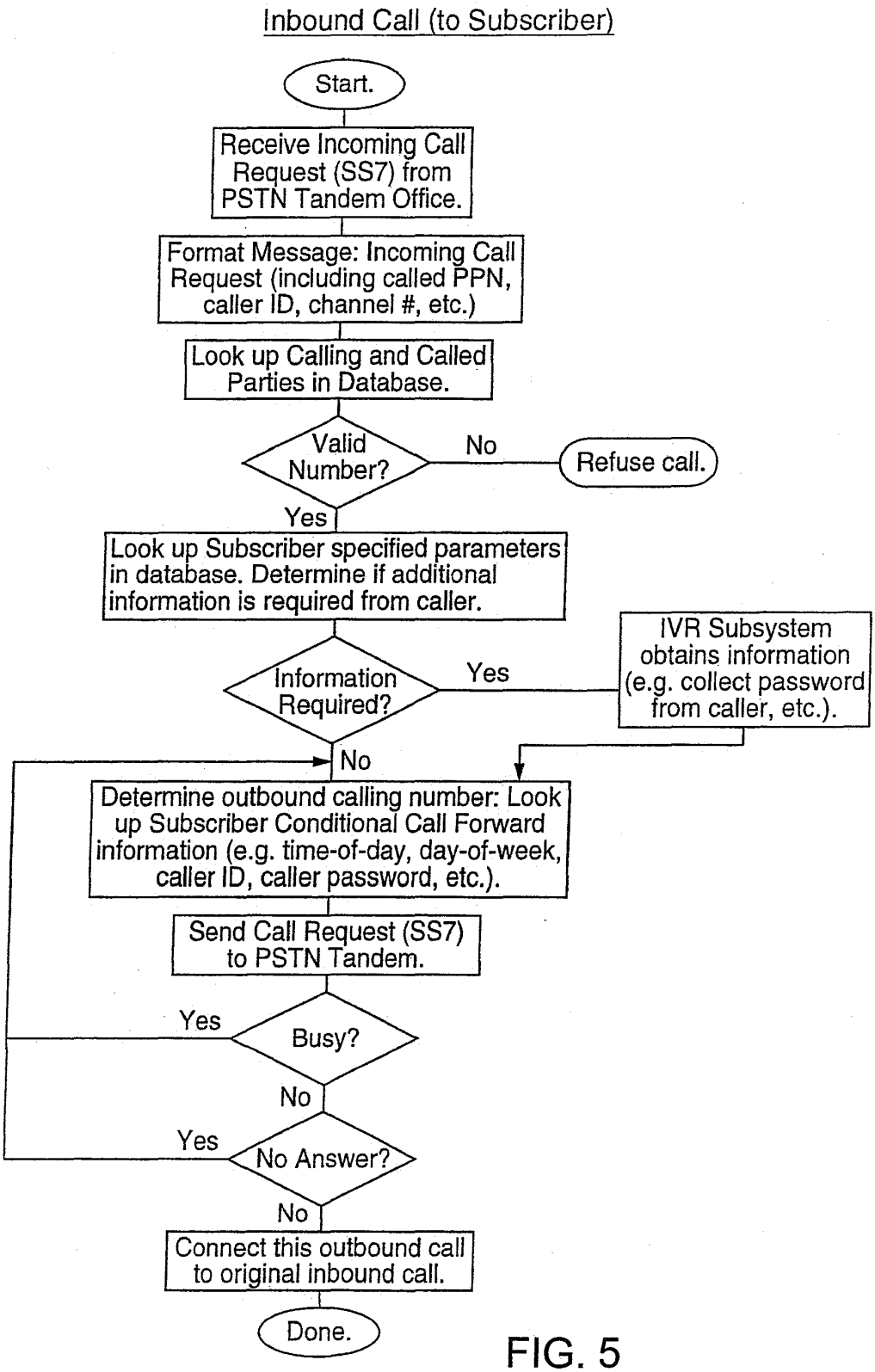
Inbound Call (to Subscriber)
Start.
Receive Incoming Call Request (SS7) from PSTN Tandem Office.
Format Message: Incoming Call Request (including called PPN, caller ID, channel #, etc.)
Look up Calling and Called Parties in Database.
Valid Number?
No
Refuse call.
Yes
Look up Subscriber specified parameters in database. Determine if additional information is required from caller.
Information Required?
Yes
IVR Subsystem obtains information (e.g. collect password from caller, etc.).
No
Determine outbound calling number: Look up Subscriber Conditional Call Forward information (e.g. time-of-day, day-of-week, caller ID, caller password, etc.).
Send Call Request (SS7) to PSTN Tandem.
Yes
Busy?
No
Yes
No Answer?
No
Connect this outbound call to original inbound call.
Done.

FIG. 5

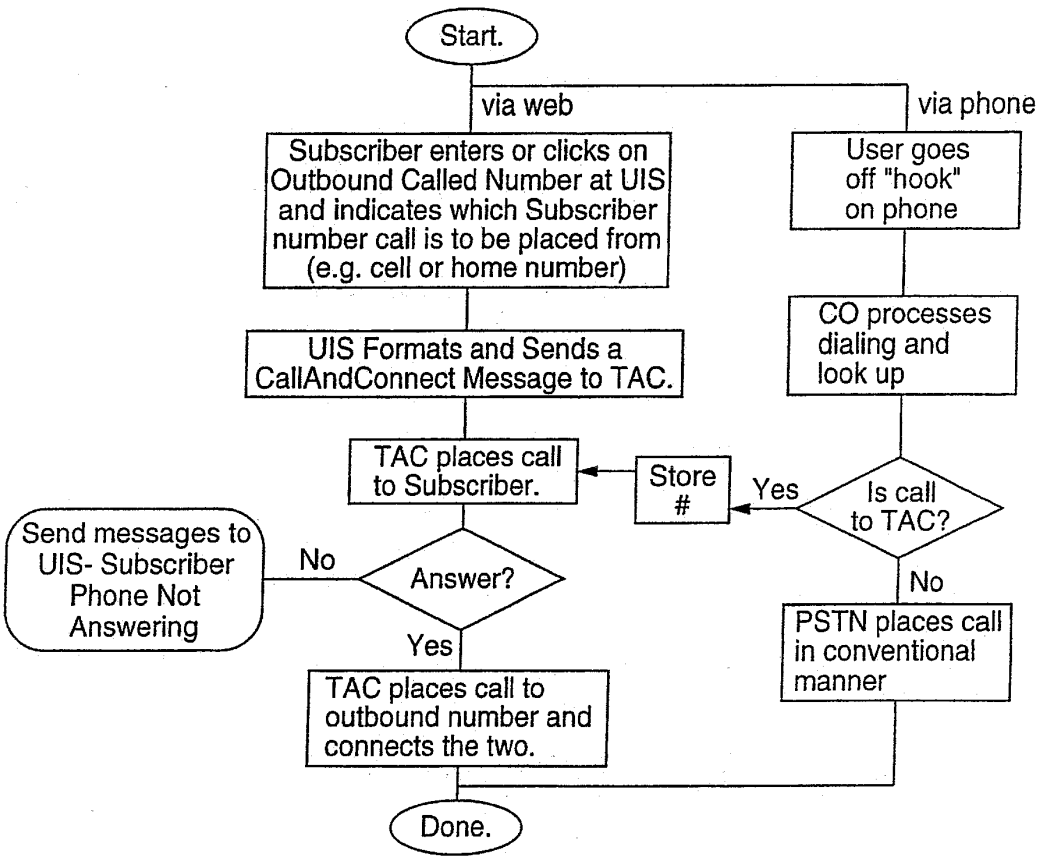
Outbound Call (from Subscriber)
Start.
via web
via phone
Subscriber enters or clicks on Outbound Called Number at UIS and indicates which Subscriber number call is to be placed from (e.g. cell or home number)
User goes off "hook" on phone
UIS Formats and Sends a CallAndConnect Message to TAC.
CO processes dialing and look up
TAC places call to Subscriber.
Store #
Yes
Is call to TAC?
Send messages to UIS- Subscriber Phone Not Answering
No
Answer?
No
PSTN places call in conventional manner
Yes
TAC places call to outbound number and connects the two.
Done.

FIG. 6

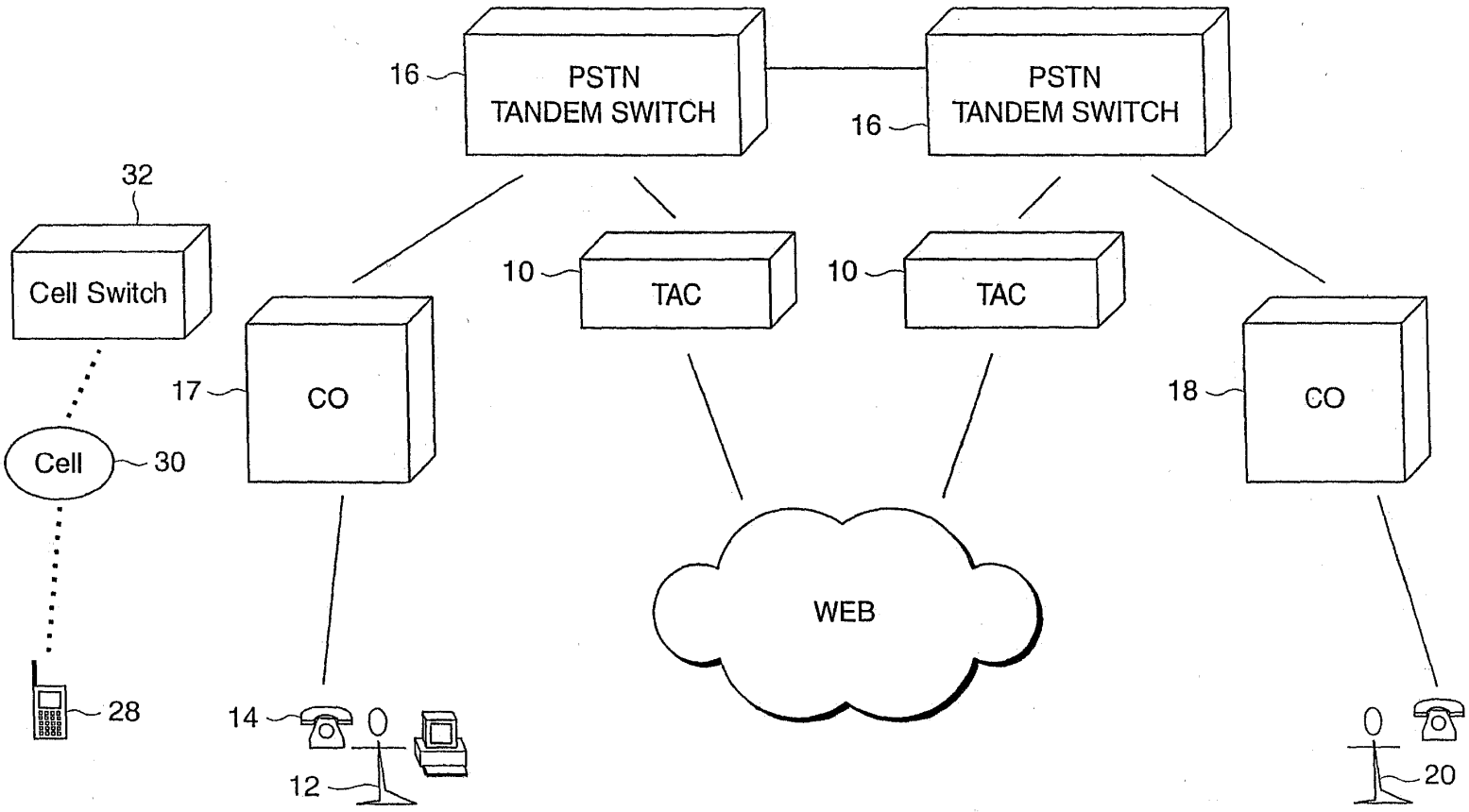
16
PSTN
TANDEM SWITCH
16
PSTN
TANDEM SWITCH
32
Cell Switch
10
TAC
10
TAC
17
CO
18
CO
Cell
30
WEB
28
14
12
20

FIG. 7

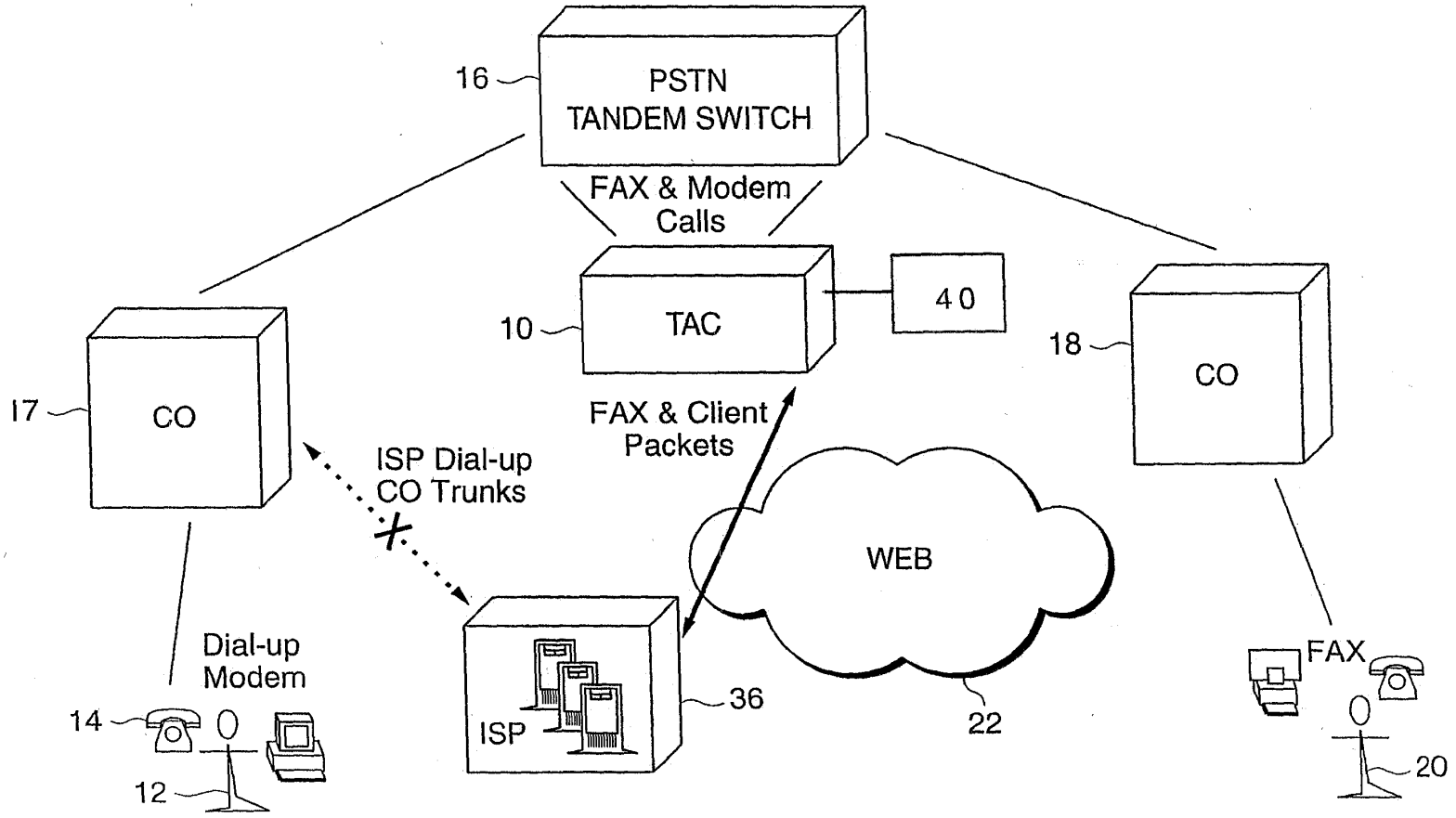
16
PSTN
TANDEM SWITCH
FAX & Modem
Calls
10
TAC
40
17
CO
18
CO
FAX & Client
Packets
ISP Dial-up
CO Trunks
WEB
Dial-up
Modem
14
12
ISP
36
22
FAX
20

FIG. 8

CALLER ID (CID) FLOWCHART

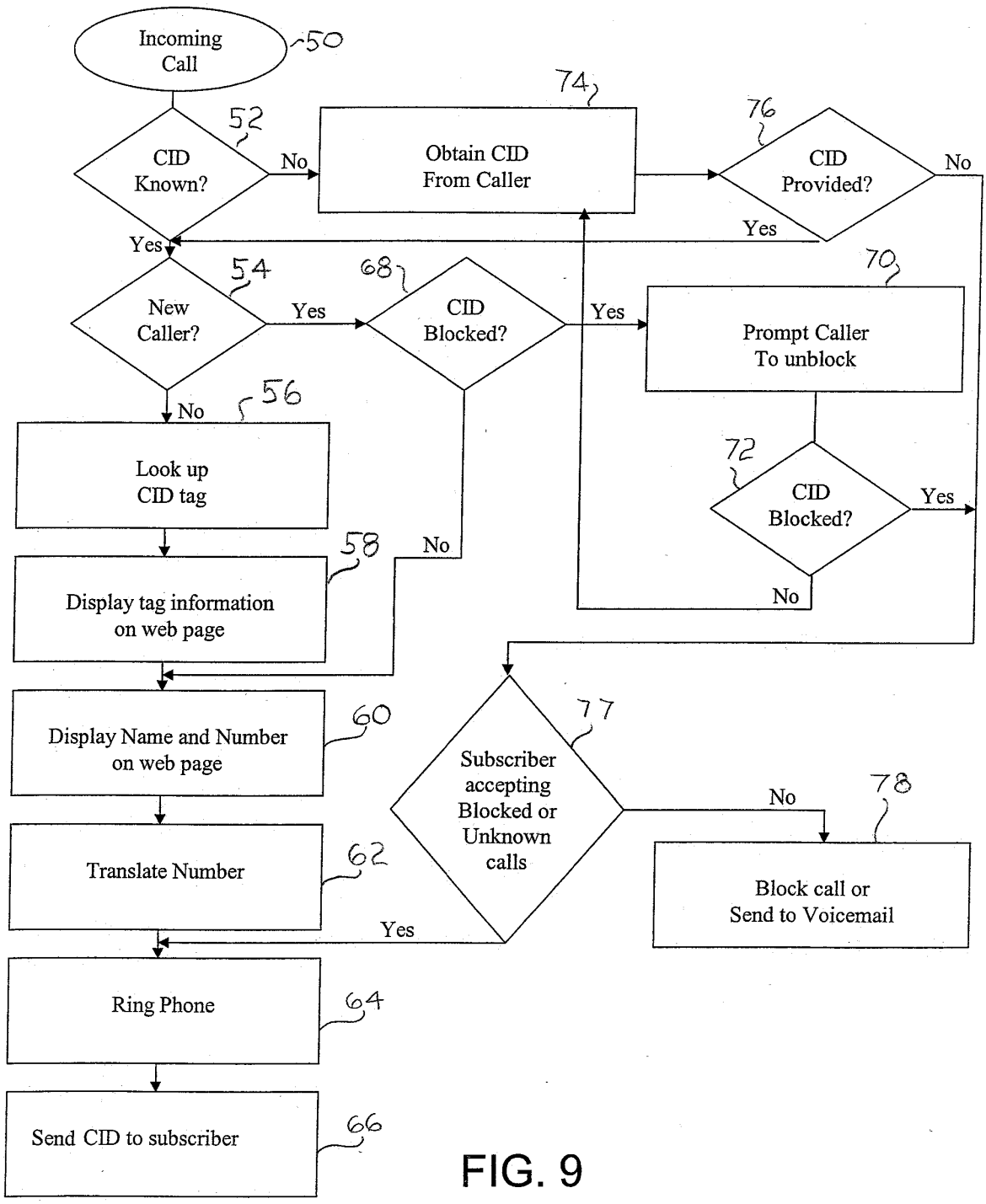

FIG. 9

Branch Calling Flow Chart

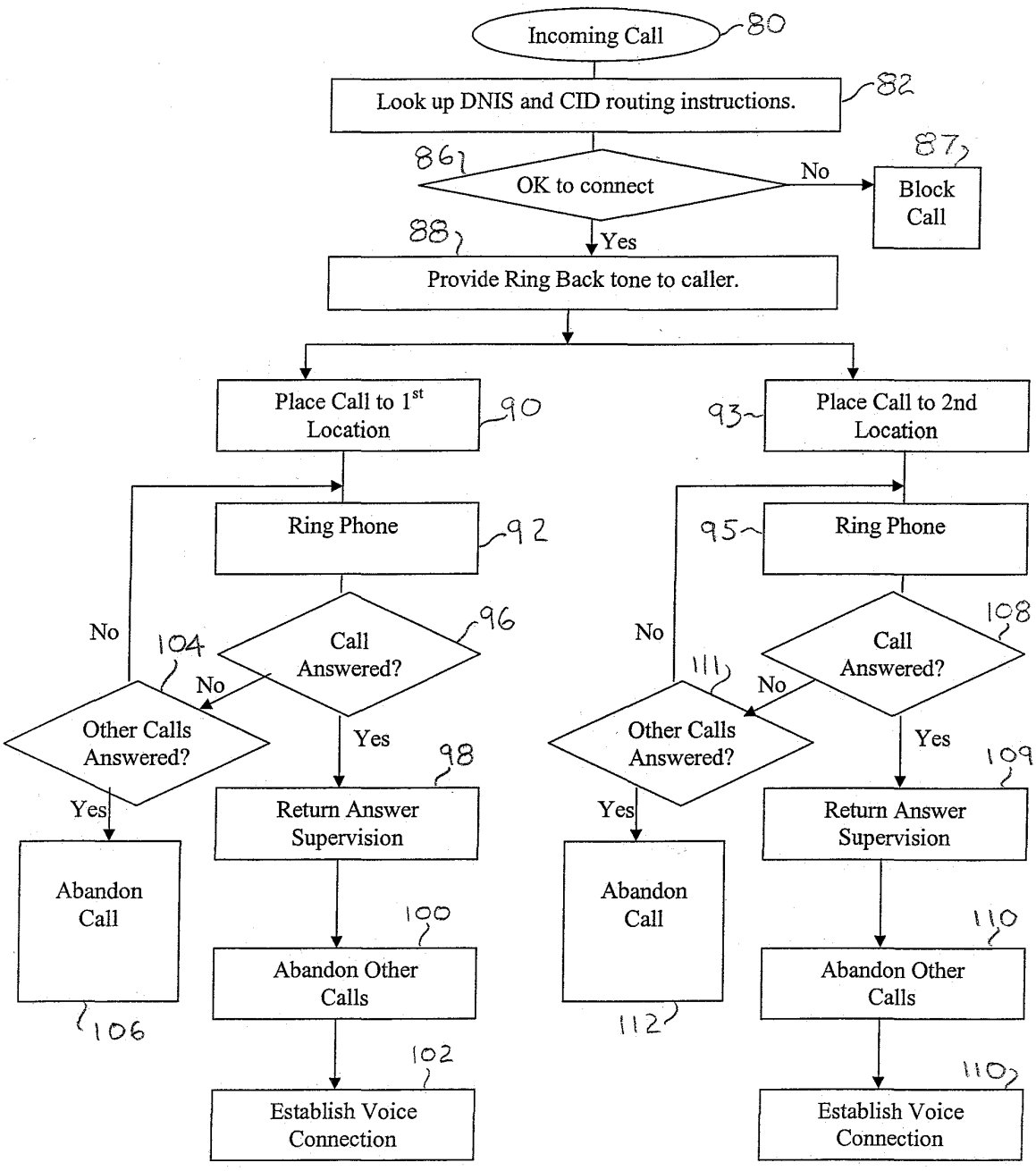

FIG. 10

Attorney Docket No.: TEL-M-8801-1P

DECLARATION FOR PATENT APPLICATION
AND POWER OF ATTORNEY

As a below named inventor, I hereby declare that:

My residence, post office address and citizenship are as stated below adjacent to my name.

I believe I am the original, first and sole inventor (if only one name is listed below) or an original, first and joint inventor (if plural names are listed below) of subject matter (process, machine, manufacture, or composition of matter, or an improvement thereof) which is claimed and for which a patent is sought by way of the application entitled

BRANCH CALLING AND CALLER ID BASED CALL ROUTING TELEPHONE FEATURES

which (check)
- ☐ is attached hereto.
- ☐ and is amended by the Preliminary Amendment attached hereto.
- ☒ was filed on April 30, 2003 as Application Serial No. 10/426,279
- ☐ and was amended on (if applicable).

I hereby state that I have reviewed and understand the contents of the above identified specification, including the claims, as amended by any amendment referred to above.

I acknowledge the duty to disclose information, which is material to patentability as defined in Title 37, Code of Federal Regulations, § 1.56.

I hereby claim foreign priority benefits under Title 35, United States Code, § 119(a)-(d) of any foreign application(s) for patent or inventor's certificate or any PCT international application(s) designating at least one country other than the United States of America listed below and have also identified below any foreign application(s) for patent or inventor's certificate or any PCT international application(s) designating at least one country other than the United States of America filed by me on the same subject matter having a filing date before that of the application(s) of which priority is claimed:

Prior Foreign Application(s)			Priority Claimed	
Number	Country	Day/Month/Year Filed	Yes	No
N/A			☐	☐

I hereby claim the benefit under Title 35, United States Code, § 119(e) of any United States provisional application(s) listed below:

Provisional Application Number	Filing Date
N/A	

Bright House Networks - Ex. 1008, Page 1767

I hereby claim the benefit under Title 35, United States Code, § 120 of any United States application(s) or PCT international application(s) designating the United States of America listed below and, insofar as the subject matter of each of the claims of this application is not disclosed in the prior application(s) in the manner provided by the first paragraph of Title 35, United States Code, § 112, I acknowledge the duty to disclose information, which is material to patentability as defined in Title 37, Code of Federal Regulations, § 1.56, which became available between the filing date of the prior application(s) and the national or PCT international filing date of this application:

Application Serial No.	Filing Date	Status (patented, pending, abandoned)
09/565,565	May 4, 2000	Now Patent 6,574,328

I hereby appoint the following practitioners to prosecute this application and to transact all business in the United States Patent and Trademark Office connected therewith:

Customer Number

32566

PATENT TRADEMARK OFFICE

Please address all correspondence and telephone calls to:

Brian D. Ogonowsky
Patent Law Group LLP
2635 North First Street, Suite 223
San Jose, California 95134-2049
Phone: (408) 382-0480
Fax: (408) 382-0481

I declare that all statements made herein of my own knowledge are true, all statements made herein on information and belief are believed to be true, and all statements made herein are made with the knowledge that whoever, in any matter within the jurisdiction of the Patent and Trademark Office, knowingly and willfully falsifies, conceals, or covers up by any trick, scheme, or device a material fact, or makes any false, fictitious or fraudulent statements or representations, or makes or uses any false writing or document knowing the same to contain any false, fictitious or fraudulent statement or entry, shall be subject to the penalties including fine or imprisonment or both as set forth under 18 U.S.C. 1001, and that violations of this paragraph may jeopardize the validity of the application or this document, or the validity or enforceability of any patent, trademark registration, or certificate resulting therefrom.

Full name of first joint inventor: Samuel F. Wood

Inventor's Signature: _____ Date: 1-10-05

Residence: Los Altos, California

Post Office Address: 12648 La Cresta Court
Los Altos Hills, CA 94022

Citizenship: USA

Bright House Networks - Ex. 1008, Page 1768

Full name of second joint inventor: Jerry A. Klein

Inventor's Signature: _____ Date: 1-10-05

Residence: Los Altos, California

Post Office Address: 671 Milverton Road
Los Altos, CA 94022

Citizenship: USA

Full name of third joint inventor: Margaret Susan Asprey

Inventor's Signature: _____ Date: 1/10/05

Residence: Los Altos, California

Post Office Address: 422 Traverso Court
Los Altos, CA 94022

Citizenship: USA

Bright House Networks - Ex. 1008, Page 1769

Electronic Patent Application Fee Transmittal

Application Number:	
Filing Date:	
Title of Invention:	Tandem Access Controller Within the Public Switched Telephone Network
First Named Inventor:	Samuel F. Wood
Filer:	Brian D. Ogonowsky/Edith Fuentes
Attorney Docket Number:	TEL-M-8801-1P-1C

Filed as Small Entity

Utility Filing Fees

Description	Fee Code	Quantity	Amount	Sub-Total in USD($)
Basic Filing:				
Utility filing Fee (Electronic filing)	4011	1	75	75
Utility Search Fee	2111	1	250	250
Utility Examination Fee	2311	1	100	100
Pages:				
Claims:				
Claims in excess of 20	2202	4	25	100
Miscellaneous-Filing:				
Petition:				

Description	Fee Code	Quantity	Amount	Sub-Total in USD($)
Patent-Appeals-and-Interference:				
Post-Allowance-and-Post-Issuance:				
Extension-of-Time:				
Miscellaneous:				
		Total in USD ($)		**525**

Electronic Acknowledgement Receipt

EFS ID:	1103293
Application Number:	11428822
Confirmation Number:	4565
Title of Invention:	Tandem Access Controller Within the Public Switched Telephone Network
First Named Inventor:	Samuel F. Wood
Customer Number:	32566
Filer:	Brian D. Ogonowsky/Edith Fuentes
Filer Authorized By:	Brian D. Ogonowsky
Attorney Docket Number:	TEL-M-8801-1P-1C
Receipt Date:	05-JUL-2006
Filing Date:	
Time Stamp:	20:53:30
Application Type:	Utility
International Application Number:	

Payment information:

Submitted with Payment	yes
Payment was successfully received in RAM	$525
RAM confirmation Number	458
Deposit Account	502226
The Director of the USPTO is hereby authorized to charge indicated fees and credit any overpayment as follows: Charge any Additional Fees required under 37 C.F.R. Section 1.16 and 1.17	

File Listing:

Document Number	Document Description	File Name	File Size(Bytes)	Multi Part	Pages
1	Transmittal letter	TEL-M-8801-1P-1C_Div-App-Trans.pdf	301559	no	1
Warnings:					
Information:					
2	Application Data Sheet	TEL-M-8801-1P-1C_ADS.pdf	757095	no	4
Warnings:					
Information:					
3		TEL-M-8801-1P-1C_App.pdf	136123	yes	31

Multipart Description

Doc Desc	Start	End
Specification	1	21
Claims	22	30
Abstract	31	31

Warnings:					
Information:					
4	Drawings	TEL-M-8801-1P-1C_Dwgs.pdf	268779	no	11
Warnings:					
Information:					
5	Oath or Declaration filed	TEL-M-8801-1P-1C_Dec.pdf	262555	no	3
Warnings:					
Information:					
6	Fee Worksheet (PTO-875)	fee-info.pdf	8499	no	2
Warnings:					
Information:					
Total Files Size (in bytes):			1734610		

This Acknowledgement Receipt evidences receipt on the noted date by the USPTO of the indicated documents, characterized by the applicant, and including page counts, where applicable. It serves as evidence of receipt similar to a Post Card, as described in MPEP 503.

New Applications Under 35 U.S.C. 111

If a new application is being filed and the application includes the necessary components for a filing date (see 37 CFR 1.53(b)-(d) and MPEP 506), a Filing Receipt (37 CFR 1.54) will be issued in due course and the date shown on this Acknowledgement Receipt will establish the filing date of the application.

National Stage of an International Application under 35 U.S.C. 371

If a timely submission to enter the national stage of an international application is compliant with the conditions of 35 U.S.C. 371 and other applicable requirements a Form PCT/DO/EO/903 indicating acceptance of the application as a national stage submission under 35 U.S.C. 371 will be issued in addition to the Filing Receipt, in due course.

Electronic Acknowledgement Receipt

EFS ID:	1103293
Application Number:	11428822
Confirmation Number:	4565
Title of Invention:	Tandem Access Controller Within the Public Switched Telephone Network
First Named Inventor:	Samuel F. Wood
Customer Number:	32566
Filer:	Brian D. Ogonowsky/Edith Fuentes
Filer Authorized By:	Brian D. Ogonowsky
Attorney Docket Number:	TEL-M-8801-1P-1C
Receipt Date:	05-JUL-2006
Filing Date:	
Time Stamp:	20:53:30
Application Type:	Utility
International Application Number:	

Payment information:

Submitted with Payment	yes
Payment was successfully received in RAM	$525
RAM confirmation Number	458
Deposit Account	502226
The Director of the USPTO is hereby authorized to charge indicated fees and credit any overpayment as follows: Charge any Additional Fees required under 37 C.F.R. Section 1.16 and 1.17	

File Listing:

Document Number	Document Description	File Name	File Size(Bytes)	Multi Part	Pages
1	Transmittal letter	TEL-M-8801-1P-1C_Div-App-Trans.pdf	301559	no	1
Warnings:					
Information:					
2	Application Data Sheet	TEL-M-8801-1P-1C_ADS.pdf	757095	no	4
Warnings:					
Information:					
3		TEL-M-8801-1P-1C_App.pdf	136123	yes	31

	Multipart Description		
	Doc Desc	**Start**	**End**
	Specification	1	21
	Claims	22	30
	Abstract	31	31

Warnings:					
Information:					
4	Drawings	TEL-M-8801-1P-1C_Dwgs.pdf	268779	no	11
Warnings:					
Information:					
5	Oath or Declaration filed	TEL-M-8801-1P-1C_Dec.pdf	262555	no	3
Warnings:					
Information:					
6	Fee Worksheet (PTO-875)	fee-info.pdf	8499	no	2
Warnings:					
Information:					
		Total Files Size (in bytes):	1734610		

This Acknowledgement Receipt evidences receipt on the noted date by the USPTO of the indicated documents, characterized by the applicant, and including page counts, where applicable. It serves as evidence of receipt similar to a Post Card, as described in MPEP 503.

New Applications Under 35 U.S.C. 111

If a new application is being filed and the application includes the necessary components for a filing date (see 37 CFR 1.53(b)-(d) and MPEP 506), a Filing Receipt (37 CFR 1.54) will be issued in due course and the date shown on this Acknowledgement Receipt will establish the filing date of the application.

National Stage of an International Application under 35 U.S.C. 371

If a timely submission to enter the national stage of an international application is compliant with the conditions of 35 U.S.C. 371 and other applicable requirements a Form PCT/DO/EO/903 indicating acceptance of the application as a national stage submission under 35 U.S.C. 371 will be issued in addition to the Filing Receipt, in due course.