(12) INTERNATIONAL APPLICATION PUBLISHED UNDER THE PATENT COOPERATION TREATY (PCT)

(19) World Intellectual Property Organization
International Bureau

(43) International Publication Date
18 January 2001 (18.01.2001)

PCT

(10) International Publication Number
WO 01/05078 A3

(51) International Patent Classification[7]: H04J 3/16

(21) International Application Number: PCT/US00/18831

(22) International Filing Date: 10 July 2000 (10.07.2000)

(25) Filing Language: English

(26) Publication Language: English

(30) Priority Data:
09/351,251 12 July 1999 (12.07.1999) US

(71) Applicant and
(72) Inventor: **WEINGARTEN, Walter, Jay** [US/US]; 2nd Floor, 2801-B Avenue P, Brooklyn, NY 11229 (US).

(74) Agents: **COCH, Nicholas, L.** et al.; Kramer, Levin, Naftalis & Frankel LLP, 919 Third Avenue, New York, NY 10022 (US).

(81) Designated States *(national)*: AE, AG, AL, AM, AT, AU, AZ, BA, BB, BG, BR, BY, BZ, CA, CH, CN, CR, CU, CZ, DE, DK, DM, DZ, EE, ES, FI, GB, GD, GE, GH, GM, HR, HU, ID, IL, IN, IS, JP, KE, KG, KP, KR, KZ, LC, LK, LR, LS, LT, LU, LV, MA, MD, MG, MK, MN, MW, MX, MZ, NO, NZ, PL, PT, RO, RU, SD, SE, SG, SI, SK, SL, TJ, TM, TR, TT, TZ, UA, UG, UZ, VN, YU, ZA, ZW.

(84) Designated States *(regional)*: ARIPO patent (GH, GM, KE, LS, MW, MZ, SD, SL, SZ, TZ, UG, ZW), Eurasian patent (AM, AZ, BY, KG, KZ, MD, RU, TJ, TM), European patent (AT, BE, CH, CY, DE, DK, ES, FI, FR, GB, GR, IE, IT, LU, MC, NL, PT, SE), OAPI patent (BF, BJ, CF, CG, CI, CM, GA, GN, GW, ML, MR, NE, SN, TD, TG).

Published:
— *With international search report.*

(88) Date of publication of the international search report:
31 May 2001

For two-letter codes and other abbreviations, refer to the "Guidance Notes on Codes and Abbreviations" appearing at the beginning of each regular issue of the PCT Gazette.

(54) Title: TRANSPARENT SYSTEMS FOR COMMUNICATION OVER COMPUTER NETWORKS

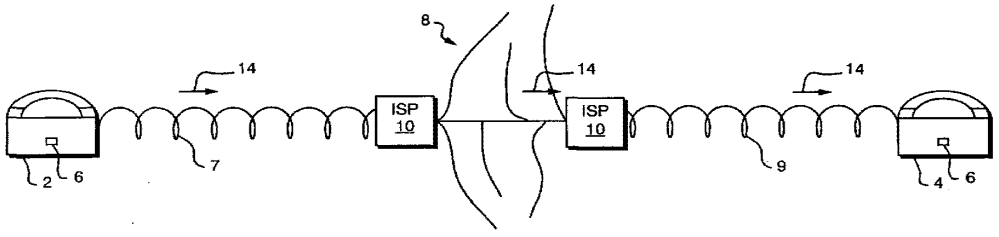

(57) Abstract: Telephone (2), radio, and television systems for communication over computer networks conduct audio, video and other forms of communication over computer networks upon entry of appropriate input on devices included within the telephonic (2), radio, and television systems.

WO 01/05078 A3

INTERNATIONAL SEARCH REPORT

International application No.
PCT/US00/18831

A. CLASSIFICATION OF SUBJECT MATTER:
IPC (7):

H04J 3/16

H04J 3/16

Form PCT/ISA/210 (extra sheet) (July 1998)★

INTERNATIONAL SEARCH REPORT

International application No.
PCT/US00/18831

A. CLASSIFICATION OF SUBJECT MATTER

IPC(7) :Please See Extra Sheet.
US CL :370/465,466,351,352,389,552,490; 348/110,26,734; 358/142
According to International Patent Classification (IPC) or to both national classification and IPC

B. FIELDS SEARCHED

Minimum documentation searched (classification system followed by classification symbols)

U.S. : 370/465,466,351,352,389,552,490; 348/110,26,734; 358/142

Documentation searched other than minimum documentation to the extent that such documents are included in the fields searched

NONE

Electronic data base consulted during the international search (name of data base and, where practicable, search terms used)

NONE

C. DOCUMENTS CONSIDERED TO BE RELEVANT

Category*	Citation of document, with indication, where appropriate, of the relevant passages	Relevant to claim No.
X	US 5,774,357 A (HOFFBERG ET AL.) 30 June 1998, see columns 23-25.	1-18
A,P	US 6,081,750 A (HOFFBERG ET AL.) see abstract. 27 June 2000	1

☐ Further documents are listed in the continuation of Box C. ☐ See patent family annex.

*	Special categories of cited documents:	"T"	later document published after the international filing date or priority date and not in conflict with the application but cited to understand the principle or theory underlying the invention
"A"	document defining the general state of the art which is not considered to be of particular relevance	"X"	document of particular relevance; the claimed invention cannot be considered novel or cannot be considered to involve an inventive step when the document is taken alone
"E"	earlier document published on or after the international filing date	"Y"	document of particular relevance; the claimed invention cannot be considered to involve an inventive step when the document is combined with one or more other such documents, such combination being obvious to a person skilled in the art
"L"	document which may throw doubts on priority claim(s) or which is cited to establish the publication date of another citation or other special reason (as specified)	"&"	document member of the same patent family
"O"	document referring to an oral disclosure, use, exhibition or other means		
"P"	document published prior to the international filing date but later than the priority date claimed		

Date of the actual completion of the international search 16 DECEMBER 2000	Date of mailing of the international search report 08 FEB 2001
Name and mailing address of the ISA/US Commissioner of Patents and Trademarks Box PCT Washington, D.C. 20231 Facsimile No. (703) 305-3230	Authorized officer DANG TON Telephone No. (703) 305-4739

Form PCT/ISA/210 (second sheet) (July 1998)★

(12) INTERNATIONAL APPLICATION PUBLISHED UNDER THE PATENT COOPERATION TREATY (PCT)

(19) World Intellectual Property Organization
International Bureau

(43) International Publication Date
5 April 2001 (05.04.2001)

PCT

(10) International Publication Number
WO 01/24496 A1

(51) International Patent Classification[7]: H04M 3/42, H04Q 3/00, H04M 7/00

(21) International Application Number: PCT/US00/26094

(22) International Filing Date:
22 September 2000 (22.09.2000)

(25) Filing Language: English

(26) Publication Language: English

(30) Priority Data:
09/405,283 27 September 1999 (27.09.1999) US

(71) Applicant: **3COM CORPORATION** [US/US]; 3800 Golf Road, Rolling Meadows, IL 60008 (US).

(72) Inventors: **SIDHU, Ikhlaq, S.**; 403 River Grove Lane, Vernon Hills, IL 60061 (US). **SCHUSTER, Guido, M.**; Apartment 408, 1433 Perry Street, Des Plaines, IL 60016 (US). **DEAN, Frederick, D.**; 2311 N. Greenview Avenue, Chicago, IL 60614 (US). **BEZAITIS, Andrew**; 2716 Troy Street, Chicago, IL 60647 (US).

(74) Agent: **PEREZ, Enrique**; McDonnell Boehnen Hulbert & Berghoff, 300 South Wacker Drive, Chicago, IL 60606 (US).

(81) Designated States *(national)*: CA, GB.

(84) Designated States *(regional)*: European patent (AT, BE, CH, CY, DE, DK, ES, FI, FR, GB, GR, IE, IT, LU, MC, NL, PT, SE).

Published:
— *With international search report.*
— *Before the expiration of the time limit for amending the claims and to be republished in the event of receipt of amendments.*

For two-letter codes and other abbreviations, refer to the "Guidance Notes on Codes and Abbreviations" appearing at the beginning of each regular issue of the PCT Gazette.

(54) Title: SYSTEM AND METHOD FOR PROVIDING USER-CONFIGURED TELEPHONE SERVICE IN A DATA NETWORK TELEPHONY SYSTEM

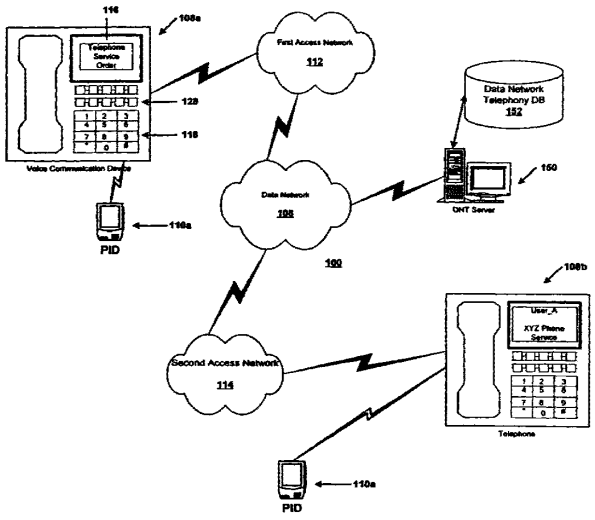

(57) Abstract: A system and method for providing user-configured telephone service to a user of a data network telephone. The user connects a data network telephone to the data network. The data network telephone registers with a telephone connection server to have basic calling service. The user accesses a service provider server to enter feature selections. The service provider server may use a web page to query the user for feature selections. The service provider server uses the user's selections to update the user's account and to activate the selected features.

WO 01/24496 A1

SYSTEM AND METHOD FOR PROVIDING USER-CONFIGURED TELEPHONE SERVICE IN A DATA NETWORK TELEPHONY SYSTEM

BACKGROUND OF THE INVENTION

A. Field of the Invention

The present invention is related to field of telecommunications, and more particularly to a system and method for providing communication services over a network.

B. Description of the Related Art and Advantages of the Present Invention

For many years, telephone service providers on the Public Switched Telephone Network (PSTN) provided their customers nothing more than a telephone line to use to communicate with other subscribers. Over time, telephone service providers have enhanced their service by providing Custom Local Area Signaling Service (CLASS) features to their customers. Similar communication services are provided by a Private Branch Exchange (PBX), which is typically implemented in a nonresidential setting.

The CLASS features permit customer subscribers of the features to tailor their telephone service according to individual needs. Some of the well known CLASS features are:

- Call blocking: The customer may specify one or more numbers from which he or she does not want to receive calls. A blocked caller will hear a rejection message, while the callee will not receive any indication of the call.
- Call return: Returns a call to the most recent caller. If the most recent caller is busy, the returned call may be queued until it can be completed.
- Call trace: Allows a customer to trigger a trace of the number of the most recent caller.
- Caller ID: The caller's number is automatically displayed during the silence period after the first ring. This feature requires the customer's line to be equipped with a device to read and display the out-of-band signal containing the number.
- Caller ID blocking: Allows a caller to block the display of their number in a callee's caller ID device.

• Priority ringing: Allows a customer to specify a list of numbers for which, when the customer is called by one of the numbers, the customer will hear a distinctive ring.

• Call forwarding: A customer may cause incoming calls to be automatically forwarded to another number for a period of time.

A customer subscriber to a CLASS feature may typically activate and/or de-activate a CLASS feature using "*" directives (e.g., *69 to automatically return a call to the most recent caller). CLASS features may also be implemented with the use of out-of-band data. CLASS feature data is typically transmitted between local Class-5 switches using the Signaling System 7 (SS7).

Local Exchange Carriers (LECs) and other similar organizations maintain CLASS offices that typically contain a database entry for each customer. The database allows specification of the CLASS features a customer has subscribed to, as well as information, such as lists of phone numbers, associated with those features. In some cases, customers may edit these lists on-line via a touch-tone interface. A list of all phone numbers that have originated or terminated a call with each customer is often included in the CLASS office database. For each customer, usually only the most recent number on this list is stored by the local Class-5 switch.

A Private Branch Exchange (PBX), is a stored program switch similar to a Class-5 switch. It is usually used within a medium-to-large-sized business for employee telephony service. Since a PBX is typically operated by a single private organization, there exists a wide variety of PBX services and features. Custom configurations are common, such as integration with intercom and voice mail systems. PBX's typically support their own versions of the CLASS features, as well as other features in addition to those of CLASS. Most PBX features are designed to facilitate business and group communications.

A summary of typical PBX features includes:

• Call transfer: An established call may be transferred from one number to another number on the same PBX.

• Call forwarding: In addition to CLASS call forwarding, a PBX number can be programmed to automatically transfer a call to another number when the first number does not answer or is busy.

Bright House Networks - Ex. 1108, Page 428

• Camp-on queuing: Similar to PSTN call return, a call to a busy number can be queued until the callee can accept it. The caller can hang up their phone and the PBX will ring them when the callee answers.

• Conference calling: Two or more parties can be connected to one another by dialing into a conference bridge number.

• Call parking: An established call at one number can be put on hold and then reestablished from another number. This is useful when call transfer is not warranted.

• Executive override: A privileged individual can break into an established call. After a warning tone to the two participants, the call becomes a three-way call.

While the CLASS and PBX features have enhanced the offerings of service providers that use the PSTN, the features are nevertheless limited in their flexibility and scope. The effect to the user is that the features become clumsy and difficult to use. For example, in order to use the Call Forwarding function, the user must perform the steps at the user's own phone prior to moving to the location of the telephone to which calls will be forwarded. A more desirable approach, from the standpoint of usefulness to the user, would be to perform the steps at the telephone to which calls will be forwarded.

Much of the lack of flexibility of the PSTN features is due to the lack of flexibility in the PSTN system itself. One problem with the PSTN is that the terminal devices (e.g. telephones) lack intelligence and operate as "dumb" terminals on a network having the intelligence in central offices. Most PSTN telephones are limited in functional capability to converting the analog signals they receive to sound and converting the sound from the handset to analog signals.

Some PSTN telephones have a display device and a display function to display specific information communicated from intelligent agents in the PSTN network using the PSTN signaling architecture. For example, some PSTN telephones have a display function to enable the Caller ID feature. Even such PSTN telephones are limited however by the closed PSTN signaling architecture, which prohibits access by the PSTN telephones to the network signaling protocols. The display functions are effectively limited to displaying text, again, as a "dumb" terminal.

The Internet presents a possible solution for distributing intelligence to telephony terminal devices. In Internet telephony, digitized voice is treated as data

Bright House Networks - Ex. 1108, Page 429

and transmitted across a digital data network between a telephone calls' participants. One form of Internet telephony uses a telephony gateway/terminal where IP telephony calls are terminated on the network. PSTN telephones are connected by a subscriber line to the gateway/terminal at the local exchange, or at the nearest central office. This form of Internet telephony provides substantial cost savings for users. Because the PSTN portion used in Internet telephony calls is limited to the local lines on each end of the call, long distance calls may be made for essentially the cost of a local call. Notwithstanding the costs savings provided by this form of Internet telephony, it is no more flexible than the PSTN with respect to providing enhancements and features to the basic telephone service.

In another form of Internet telephony, telephones are connected to access networks that access the Internet using a router. The telephones in this form of Internet telephony may be substantially more intelligent than typical PSTN telephones. For example, such a telephone may include substantially the computer resources of a typical personal computer.

It would be desirable to incorporate CLASS and PBX features into a data network telephony system that uses a data network such as the Internet.

It would be desirable to provide new features and enhancements to telephony service that accommodates and conforms to users' needs.

It would also be desirable to provide features and capabilities to telephone service that create new opportunities for users and for service providers.

The present invention addresses the above needs by providing a system in a data network telephony system, such as for example, the Internet, that provides a way for users to make brand new telephones usable without having to wait while the telephone company programs an account. The embodiments of the present invention may also be used to modify existing telephone accounts to incorporate new features, or features that may be desired for a limited amount of time.

One advantage of the present invention is that telephone features become user-configurable.

Another advantage is that the extent to which features are user-configurable may be determined by the service provider. The service provider may wish to make a

Bright House Networks - Ex. 1108, Page 430

few basic features standard and impose their use in a registration function. Other features may then be made selectable by the user.

Bright House Networks - Ex. 1108, Page 431

BRIEF DESCRIPTION OF THE DRAWINGS

Presently preferred embodiments of the invention are described below in conjunction with the appended drawing figures, wherein like reference numerals refer to like elements in the various figures, and wherein:

FIG. 1 is block diagram of a data network telephony system for providing telephony and enhanced telephony services in accordance with embodiments of the present invention;

FIG. 2A shows one embodiment of the system of FIG. 1 showing examples of access to data network telephony service providers;

FIG. 2B shows one example of one of the data network telephones in FIG. 2A;

FIG. 3A is a block diagram showing the interaction between components in accordance with one example of a system and method for configuring a data network telephone for service in the data network telephony system in FIG. 2A;

FIG. 3B is a block diagram showing one example of the interaction between components in the embodiment shown in FIG. 4A to update the data network telephone version;

FIG. 3C is a block diagram showing one example of the interaction between components in the embodiment shown in FIG. 4A when registration is complete;

FIG. 4A is a block diagram showing one example of the interaction between components in the embodiment shown in FIG. 4A to provision the data network telephone version with a voice account;

FIG. 4B is a depiction of a sample screen for ordering telephone service for the data network telephone of FIG. 5A;

FIG. 4C is a block diagram showing the interaction between components in the embodiment shown in FIG. 4A to confirm service;

FIG. 4D is a depiction of a sample screen for confirming telephone service for the data network telephone of FIG. 5A;

FIG. 5 is a block diagram showing the interaction between components in accordance with an example of a system and method for communicating by data network telephone in the data network telephony system in FIG. 2A;

FIG. 6 is a flowchart showing an example of a method for registering a data network telephone using the data network telephony system of FIG. 1;

Bright House Networks - Ex. 1108, Page 432

FIG. 7 is a flowchart showing an example of a method for provisioning a data network telephone in the data network telephony system of FIG. 1; and

FIG. 8 is a flowchart showing an example of confirming the telephony service ordered using the method described in FIG. 7.

Bright House Networks - Ex. 1108, Page 433

DETAILED DESCRIPTION OF THE PREFERRED EMBODIMENT

The following references to patent applications filed concurrently herewith are incorporated be reference:

* "System and Method for Controlling Telephone Service Using a Wireless Personal Information Device" to Schuster, et al.
* "System and Method for Advertising Using Data Network Telephone Connections" to Schuster, et al.
* "System and Method for Accessing a Network Server Using a Portable Information Device Through a Network Based Telecommunication System" to Schuster, et al.
* "System and Method for Interconnecting Portable Information Devices Through a Network Based Telecommunication System" to Schuster, et al.
* "System and Method for Enabling Encryption on a Telephony Network" to Schuster, et al.
* "System and Method for Using a Portable Information Device to Establish a Conference Call on a Telephony Network" to Schuster, et al.
* "System and Method for Associating Notes with a Portable Information Device on a Network Telephony Call" to Schuster, et al.
* "System and Method for Providing Shared Workspace Services Over a Telephony Network" to Schuster, et al.
* "System and Method for Providing Service Provider Configurations for Telephones in a Data Network Telephony System" to Schuster, et al.

The following additional references are also incorporated by reference herein:

* "Multiple ISP Support for Data Over Cable Networks" to Ali Akgun, et al.
* "Method and System for Provisioning Network Addresses in a Data-Over-Cable System" to Ali Akgun, et al., Serial No. 09/218,793.
* "Network Access Methods, Including Direct Wireless to Internet Access" to Yingchun Xu, et al., Serial No. 08/887,313

A. Data Network Telephony System

FIG. 1 is a block diagram showing an example of a system 100 for providing telephony services according to preferred embodiments of the present invention. The

system includes a data network 106. A first voice communication device 108a communicates by a voice connection over the data network 106 by establishing the connection via first access network 112. The voice connection may be linked to a second voice communication device 108b which is accessed via a second access network 114.

The data network 106 in the system 100 typically includes one or more Local Area Networks (LANs) connected to one another or to a Wide-Area Network (WAN), such as an Internet Protocol (IP) network, to provide wide-scale data connectivity. The data network 106 may use Voice Over Packet (VOP) schemes in which voice signals are carried in data packets. The network 106 may also include a connection to the Public Switched Telephone Network (PSTN) to allow for voice connections using traditional circuit switching techniques. In one embodiment, the data network 106 may include one or more LANs such as Ethernet LANs and support data transport protocols for performing Voice-over-Internet-Protocol (VoIP) techniques on the Internet. For further details regarding VoIP, see the information available through the Internet Engineering Task Force (IETF) at www.ietf.org. In addition, an Internet Telephony gateway may be included within the system 100 to allow for voice connections to users connected by subscriber lines at a PSTN Central Office.

The first and second voice communication devices 108a and 108b typically include a voice input, a voice output and a voice processing system (described further below with reference to Figures 2B). The voice processing system converts voice sound from the voice input to digital data signals that are communicated on a voice connection over the data network. The voice processing system also converts digital data signals received from the voice connection to voice sound at the voice output. The voice communication devices 108a and 108b typically include a central processing unit and memory to store and process computer programs. Each voice communication device 108a and 108b typically includes a unique network address, such as an IP address, in memory to uniquely identify it to data network 106 and permit data packets to be routed to the device.

A first personal information device (PID) 110a may be connected to the first voice communication device 108a and may communicate over the data network 106 by connecting via the access network 112. The PID 110a may communicate with a

Bright House Networks - Ex. 1108, Page 435

second PID 110b connected to the second voice communications device 108b. Connections by the PIDs 110a,b may be made using the IrDA protocol or the Bluetooth system. Point to point links may include an RS232 port.

The PIDs 110a,b each contain user attributes stored in a user information database. The user attributes may contain such information as a user identifier, schedule information, and other information that is associated with a user of the PIDs 110a,b. The PIDs 110a,b each include a user interface allowing a user to easily enter and retrieve data. In a preferred embodiment, the user interface inclues a pressure-sensitive display that allows a user to enter input with a sylus or other device. An example of a PID with such an interface is a PDA (Personal Digital Assistant), such as one of the Palm™ series of PDAs offered by 3Com Corporation. The PIDs 110a,b may include other functionality, such as wireless phone or two way radio functionality.

In one embodiment, the voice communication device 108a includes a handset with a receiver and transmitter similar or identical to handsets of traditional circuit-switched telephones. A console on which the handset sits may include the voice processing system, a display 116 and a keypad 118. The voice communication device 108a may also include a speed dial key set 128 programmed, or assigned to initiate connections to other voice communication devices that may be connected to the data network 106. In a preferred embodiment, the keys on the speed dial key set 128 may be programmed remotely by a message carried on a voice connection using a selected data transport protocol.

One example of the voice communication device 108a in a preferred embodiment is the NBX 100™ communication system phones offered by 3Com® Corporation, that has been modified, as described herein, to perform speed dial programming. In alternative embodiments, the voice communication device 108a may include any device having voice communications capabilities. For example, a personal computer having a microphone input and speaker output may also be used as the voice communication device 108a. Other configurations for the user interface are also intended to be within the scope of the present invention.

The details relating to operation of the voice communication devices 108a and 108b depend on the nature of the data network 106 and the nature of the access

Bright House Networks - Ex. 1108, Page 436

networks 112, 114 connecting the voice communication devices 108a and 108b to each other and/or to other network entities. The access networks 112, 114 typically include any high bandwidth network adapted for data communications, i.e. a network having greater than 64,000 bits-per-second (bps) bandwidth. The access networks 112, 114 may link to the voice communication device 108a using an Ethernet LAN, a token ring LAN, a coaxial cable links (e.g. CATV adapted for digital communication), a digital subscriber line (DSL), twisted pair cable, fiberoptic cable, an integrated services digital network (ISDN) link, and wireless links. In embodiments that may not require a bandwidth greater than 64,000 bps, the access networks 112, 114 may also include the PSTN and link the voice communications device 108a by an analog modem. Further details regarding specific implementations are described below, with reference to FIGs. 2A and 2B.

B. System For Providing Provisioning and Configuration Services for a Telephone Using A Data Network Telephony System

One advantage of the data network telephony system 100 in FIG. 1 is that a user may begin making telephone calls by connecting the data network telephone to the access network. Alternatively, another advantage of the system 100 is that the user may plug the data network telephone to the access network to receive rudimental service, but obtain access to fully personalized, user-configured service account as well as to user-selected telephony enhancements and features.

A service provider server 120, connected to the data network 106, maintains user service accounts and manages the transport of data communications channels between voice communications devices 108a, 108b. A service provider database 122 stores the user accounts and other subscription information. In accordance with preferred embodiments, the service provider server 120 provides voice communications devices 108a, 108b with rudimentary service sufficient to connect to a service provider. The service provider server 120 then sets up user interactive connections to allow a user to configure a telephony user account. The user account is then activated substantially contemporaneously with the user interactive connection once the user submits the information. By substantially contemporaneously, it is meant that no substantial waiting period is needed before the user account may be used. In alternative embodiments, the service provider server 120 configures voice

Bright House Networks - Ex. 1108, Page 437

communications devices 108a, 108b with a full, ready-to-use configuration. The service provider host 120 also makes modifications to the user accounts easy and immediate in effect. A user may select features for temporary use. For example, a user may set up call forwarding to use while at a meeting for a week, and then disable it for other times.

1. Local Area Network As An Exemplary Access Network

FIG. 2A is a block diagram showing one example of the system 100 of FIG. 1 for providing customized communication services according to the present invention. The system 200 in FIG. 2A includes a local area network 212, connected to a data network 206 by a first router 228 and a cable network 214 connected to the data network 206 by a second router 238. Those of ordinary skill in the art will appreciate that, while the local area network 212 and the cable network 214 are shown in FIG. 2A as access networks, any other type of network may be used. For example, the local area network 212 and/or the cable network 214 may be replaced by ISDN, DSL, or any other high-speed data link.

The local area network 212 provides data connectivity to its members, such as a first data network telephone 208a, a second data network telephone 208b, a gateway 222 and a network telephony connection server 150a. The local area network 212 in FIG. 2A is an Ethernet LAN operating according to the IEEE 802.3 specification, which is incorporated by reference herein, however, any other type of local area network may be used. The local area network 212 uses the router 228 to provide the data network telephone 208a,b, the gateway 222 and the network telephony connection server 150a with access to the data network 206. For example, the router 228 may perform routing functions using protocol stacks that include the Internet Protocol and other protocols for communicating on the Internet.

The network telephony connection server 150a (hereinafter "telephony connection server") provides telephony registration, location and call initiation services for voice connections in which its members are a party. A user may register for telephony service with an administrator of the telephony connection server 150a and receive a user identifier and a telephone identifier. The user identifier and telephone identifier may be sequences of unique alphanumeric elements that callers

use to direct voice connections to the user. The telephony connection server 150a registers users by storing user records in a data network telephony user database (hereinafter "user database") 152a in response to registration requests made by the user.

The call setup process and the user and telephone identifiers preferably conform to requirements defined in a call management protocol. The call management is used to permit a caller anywhere on the data network to connect to the user identified by the user identifier in a data network telephone call. A data network telephone call includes a call setup process and a voice exchange process. The call setup process includes steps and message exchanges that a caller and callee perform to establish the telephone call. The actual exchange of voice signals is performed by a data communications channel. The data communications channel incorporates other data transport and data formatting protocols, and preferably includes well-known data communications channels typically established over the Internet.

The call management protocol used in FIG. 2A is the Session Initiation Protocol (SIP), which is described in M. Handley et al., "SIP: Session Initiation Protocol," IETF RFC 2543, Mar. 1999, incorporated by reference herein, however, any other such protocol may be used. Other protocols include H.323, the Media Gateway Control Protocol (MGCP), etc.

The local area network 206 is connected to a gateway 222. The gateway 322 communicates with a PSTN central office 224, which provides PSTN service to a PSTN phone 226. The PSTN phone 226 is likely to be one of many PSTN phones serviced by the central office 224. Additional portions of a PSTN network have been omitted from FIG. 2A to improve clarity. The PSTN network is well known by those having skill in the art of telecommunications.

The telephony connection server 150a provides telephony service for mobile users. A user may be registered to use the first network telephone 208a (which is identified by its telephone identifier), but move to a location near the second data network telephone 208b. The user may re-register as the user of the second data network telephone 208b. Calls that identify the user by the user's user identifier may reach the user at the second network telephone 208b.

Bright House Networks - Ex. 1108, Page 439

2. The Data Network Telephones

The data network telephones 208a, b are Ethernet phones which are telephones that include an Ethernet communications interface for connection to an Ethernet port. The Ethernet phones in FIG. 2A support the Internet Protocol (IP), using an IP address that is either statically configured or obtained by access to a Dynamic Host Configuration Protocol (DHCP) server.

FIG. 2B is a block diagram showing the data network telephone 208a connected to the local area network 212 in FIG. 2A. The data network telephone 208 in FIG. 2B is connected to the network 212 by a network interface 210. The network interface 210 may, for example, be a network interface card, and may be in the form of an integrated circuit. A bus 248 may be used to connect the network interface 210 with a processor 240 and a memory 242. Also connected to the processor are user interface circuitry 261 and three alternative (and all optional) interfaces to the Personal Information Device (PID) 110 (shown in FIG. 1).

A first interface 248 includes an RS-232 serial connection and associated coupling hardware and mechanisms. The first alternative interface 248 may, for example, be a docking cradle for a PDA, in which information can be transferred between the PDA and the data network telephone 208. The second alternative interface comprises a first connection 254, such as an RS-232 connection, along with infrared circuitry 250 for converting signals into infrared output and for accepting infrared input. An infrared interface 252 may also be included within the second alternative interface. The third alternative interface comprises a first connection 256, such as an RS-232 connection, along with radio-frequency circuitry 258 for converting signals into radio frequency output and for accepting radio frequency input. A radio frequency interface 259 may also be included as part of the third alternative interface.

The three alternative interfaces described above are merely examples, and additional means for implementing the interface between the data network telephone 208 and the PID may also be used. Although three interfaces are shown in FIG. 2B, there may be only one such interface in the data network telephone 208. More than one interface may be included to improve flexibility and to provide redundancy in case of failure of an interface.

Bright House Networks - Ex. 1108, Page 440

The user interface circuitry 261 includes hardware and software components that access the functions of the handset, display, keypad and speed dial keypad to provide user input and output resources for functions in the processor 240. The user interface circuitry includes a display interface 262, a keypad interface 264, a speed dial interface 266, an audio output interface 265 and an audio input interface 267.

The audio input interface 267 may receive voice signals from a microphone or other audio input device and converts the signals to digital information. The conversion preferably conforms to the G.711 ITU Standard. Further processing of the digital signal may be performed in the audio input interface 267, such as to provide compression (e.g. using G.723.1 standard) or to provide noise reduction, although such processing may also be performed in the processor 240. Alternatively, the audio input interface 267 may communicate an analog voice signal to the processor 240 for conversion to digital information.

The audio output interface 265 receives digital information representing voice from the processor 240 and converts the information to sound. In one embodiment, the speaker interface receives information in the form of G.711 although other processing such as decompression may be performed in the speaker interface 265. Alternatively, the processor 240 may convert digital information to analog voice signals and communicate the analog voice signals to the speaker interface 265.

The speed dial interface 266, the keypad interface 264 and the display interface 262 include well-known device interfaces and respective signal processing techniques. The speed dial interface 266 may include an interface to buttons on a keypad, or to display buttons that the user activates by pressing designated areas on the screen.

The user interface circuitry 261 may support other hardware and software interfaces. For example, a videophone implementation might also include a camera and monitor. The fixed communication device of the present invention is not limited to telephones or videophones – additional user interface types, for example, such as the ones needed for computer games, are also contemplated as being within the scope of the present invention.

The processor 240 may consist of one or more smaller processing units, including, for example, a programmable digital signal processing engine. In the preferred embodiment, the processor is implemented as a single ASIC (Application

Bright House Networks - Ex. 1108, Page 441

Specific Integrated Circuit) to improve speed and to economize space. The processor 240 also includes operating system, application and communications software to perform the functions of the data network telephone 208. The operating system may be any suitable commercially available embedded or disk-based operating system, or any proprietary operating system.

The processor 240 includes a media engine 241 and a signaling stack 243 to perform the primary communications and applications functions of the data network telephone 208. The purpose of the signaling stack in an exemplary data network telephone 208 is to set up, manage, and tear down a call. During the setup phase, a user may use the keypad to enter a user identifier to call. The signaling stack 243 receives the user entry and formats a request message to send to the user identified by the user identifier to initiate a telephone call. The request message is sent to discover the location of the user identified by the user identifier, exchange communication parameters, such as the supported voice CODEC types, and establish the voice channel.

During the management phase, communication proceeds over the voice over data channel. Other parties may be invited to the call if needed or the existing CODEC can be changed. During the teardown phase, the call is terminated.

The signaling protocol used in the data network telephone 208 in FIG. 2B is the SIP protocol. In particular, the signaling stack implements a User Agent Client 244 and a User Agent Server 242, in accordance with the SIP protocol. Alternative signaling protocols, such as the ITU-T H.323 protocol and others, may also be used to implement the present invention.

Once the call is setup, the media engine 241 manages the communication over a data communications channel using a network transport protocol and the network interface 210. The media engine 241 sends and receives data packets having a data payload for carrying data and an indication of the type of data is being transported. The media engine 241 in the data network telephones 208 may sample the voice signals from the audio input 267 (or receive voice samples from the audio input 267), encode the samples, and build data packets on the sending side. On the receiver side, in addition to performing the reverse operations, the media engine also typically manages a receiver buffer to compensate for network jitter.

The media engine 241 includes hardware and software components for performing speed dial functions 246, registration functions 147, voice-over-data functions 249, display data function 251 and keypad output functions 253. The media engine 241 processes data that is received from the network 212, and data that is to be sent over the network 241.

For data that is received from the network 212, the media engine 241 may determine from the type of data in the packet whether packets contain sampled voice signals or data for performing other functions. Packets containing sampled voice signals are processed by voice over data function 249. The voice over data function 249 preferably conforms to a protocol for formatting voice signals as digital data streams. While any suitable protocol may be used, the media (voice signal) is preferably transported via the Real Time Protocol (RTP), which itself is carried inside of User Datagram Protocol (UDP). RTP is described in H. Schulzrinne et al., "RTP: A Transport Protocol for Real-Time Applications," IETF RFC 1889, Jan. 1996, which is incorporated herein by reference. UDP is described in J. Postel, "User Datagram Protocol," IETF RFC 768, Aug. 1980, and IP is described in J. Postel, ed., "Internet Protocol," IETF RFC 791, Sept. 1981, both of which are incorporated by reference herein.

Packets containing data for use in registering the data network telephone 208 with a network telephony service are processed by the registration/provisioning function 247. By registering the data network telephone 208, a user may establish with the network telephony service provider that calls addressed to the user's user identifier may be connected to the data network telephone 208. Provisioning configures the data network telephone 208 with features and other user account information that relate to the service provider.

Registration may occur when the data network telephone 208 sends a request to register to a service provider host, which may occur during power up, if the data network telephone 208 is connected to the network 212, or when the user connects the data network telephone 208 to the network 212. The registration/provisioning function 247 may automatically send the Register request when the network is sensed. The service provider host may respond by setting the user's user identifier to correspond to the telephone identifier of the data network telephone 208, and by

Bright House Networks - Ex. 1108, Page 443

acknowledging the request with a status message to the data network telephone 208. In one embodiment, the service provider host communicates a response message to the data network telephone that includes a service provider logo and/or a configuration program that programs selected features into the telephone. The selected features may include a speed dial assignment to a customer server, a help menu, a user-friendly display, etc.

Other features may be added to the registration/provisioning functions 247, or implemented as extensions to the registration functions 247. For example, the data network telephone 208 may be provisioned to provide selected network telephony features by establishing a data connection with a service provider, requesting the selected services, and receiving data that ensures that the services have been successfully provisioned. Such features may include, for example, caller identification, call forwarding, voice mail, unified voice/email, gateway services, PID-based applications, call conferencing, advertisement enable/disable, and any other service offered by the network telephony service provider to enhance the capabilities of the data network telephone 208. The requests for features may be made contemporaneously with setting up a new account (as described below with reference to FIGs. 3A-8). The features may also be requested to modify the service. Users need not be locked into any service plan or feature set. One advantage of such provisioning functions is that services may be ordered for temporary use in a manner that is convenient to the user.

Packets containing data that is to be displayed on the display device are processed by the display data function 251. The display data function 251 may be used for displaying, for example, the name(s) and user identifier(s) of the other party(-ies) to the call, the status of the telephone call, billing information, and other information. The display data function 251 may also provide access to the display interface 262 for the display of commercial messages sent from the commercial message server 120 (shown in FIG. 2A). The display data function 251 may process image data and text data that may be contained in and of the messages.

Packets containing data that programs or assigns speed dial keys are processed by the speed dial function 246. A speed dial key may be programmed during registration with the user identifier of the service provider's customer service

department, or to a provisioning service. When a message, or one or more packets, is received, the data in the commercial message is examined for speed dial programming data. The speed dial programming data may include a speed dial key selector to identify the speed dial key being programmed, and a user identifier used to initiate a telephone call when the selected speed dial key is pressed. The speed dial programming data may also include directions to be displayed on the display screen that inform the user that a selected speed dial key has been programmed. In addition, the speed dial programming data may include an icon for display on a touch sensitive screen that describes the user or service to be reached when the icon on the display is touched.

The speed dial programming data may also include an indication of whether the speed dial key is to be programmed permanently, or temporarily. Temporarily programmed keys may be programmed for the duration of the present call only, or for a selected time period. Permanently programmed speed dial keys are programmed until re-programmed later.

For data that is to be sent over the data network 212, the media engine 241 formats the data as data packets in accordance with a selected protocol. The selected protocol is preferably the protocol that is supported by the data network telephone that will receive the data for the particular type of data being transported.

The voice over data function 249 formats voice samples according to the protocol used by the receiving data network telephone. In one preferred embodiment, the voice over data function 249 formats voice samples as RTP packets. The registration function 247 and the keypad output function 253 may use RTP or other protocols to transport data that does not represent voice signals.

3. Cable Network As An Exemplary Access Network

Referring back to FIG. 2A, the system 200 includes a cable network 214 connected to the data network 206 by a router 238. The cable network 214 provides data network access to its members, which in FIG. 2A include a third data network telephone 218a, a fourth data network telephone 218b, a fifth data network telephone 218c, a workstation 218d, a second data network connection telephony server 150b and a network telephony connection database 152b. The users of the data network

telephones 218a-c connected to the cable network 214 may communicate by telephone over the data network 206 with the users of the data network telephones 208a,b connected to the local area network 214.

The cable network 214 includes any digital cable television system that provides data connectivity. In the cable network 214, data is communicated by radio frequency in a high-frequency coaxial cable. The cable network 214 may include a head-end, or a central termination system that permits management of the cable connections to the users.

The cable network 214 includes high-frequency coaxial cable connections for terminating the members, such as the data network telephones 218a-c and the workstation 218d. The third, fourth and fifth data network telephones 218a-c are preferably similar to the data network telephone 208 described with reference to FIG. 2B. One difference is that the third, fourth and fifth data network telephones 218a-c access telephone service over the cable network 214, and the first and second data network telephones 208a,b access telephone service over the Ethernet.

C. Providing Telephone Services By A Data Network Telephony Service Provider

1. Telephony Service Provider

FIG. 2A shows a service provider host 160 having a service provider server 120 and a service provider database 122. The service provider server 120 registers data network telephones and performs user interactive connections with users to configure users' telephone accounts. The host 160 is connected to the data network 206, however, the host 160 may also be connected to either access network 212, 214. The host 160 may also include network telephony connection servers, such as server 150a,b. The host 160 may also communicate with separately located local network telephony connection servers 150, 152 for billing purposes, or for carrying out the features selected by users. The host 160 may be managed by a telephony service provider or by any entity for a telephony service provider.

The telephony connection server 150b is preferably a SIP-based server that performs call initiation, maintenance and teardown for the data network telephones 218a-c connected to the cable network 214. The telephony connection server 150b

may be similar or identical to the telephony connection server 150a connected to the local area network 212. The ISP host 160 includes the service provider server 120 and the service provider database 122.

The system 200 shown in FIG. 2A includes a data network telephony system that permits the data network telephones 208a, b connected to the local area network 212 to communicate with the data network telephones 214 connected to the cable network 214. The system shown in FIG. 2A uses SIP in order to establish, maintain and teardown sessions, or telephone calls between users.

There are two major architectural elements to SIP: the user agent (UA) and the network server. The UA resides at the SIP end stations, (e.g. the data network telephones), and contains two parts: a user agent client (UAC), which is responsible for issuing SIP requests, and a user agent server (UAS), which responds to such requests. There are three different network server types: a redirect server, a proxy server, and a registrar. The various network server types may be combined into a single server, such as the telephony connection server 150a,b. Not all server types are required to implement the embodiments of the present invention. The communication services to be provided will determine which servers are present in the communication system. Preferred embodiments of the present invention may be carried out using proxy servers.

One example of a SIP operation involves a SIP UAC issuing a request, a SIP proxy server acting as end-user location discovery agent, and a SIP UAS accepting the call. A successful SIP invitation consists of two requests: INVITE followed by ACK. The INVITE message contains a user identifier to identify the callee, a caller user identifier to identify the caller, and a session description that informs the called party what type of media the caller can accept and where it wishes the media data to be sent. User identifiers in SIP requests are known as SIP addresses. SIP addresses are referred to as SIP Uniform Resource Locators (SIP-URLs), which are of the form sip:user@host.domain. Other addressing conventions may also be used.

Redirect servers process an INVITE message by sending back the SIP-URL where the callee is reachable. Proxy servers perform application layer routing of the SIP requests and responses. A proxy server can either be stateful or stateless. A stateful proxy holds information about the call during the entire time the call is up,

Bright House Networks - Ex. 1108, Page 447

while a stateless proxy processes a message without saving information contained in the message. Furthermore, proxies can either be forking or non-forking. A forking proxy can, for example, ring several phones at once until somebody takes the call. Registrar servers are used to record the SIP address (called a SIP URL) and the associated IP address. The most common use of a registrar server is for the UAC to notify the registrar where the UAC can be reached for a specified amount of time. When an INVITE request arrives for the SIP URL used in a REGISTER message, the proxy or redirect server forwards the request correctly.

At the local area network 212, the central registrar/proxy server, such as the network telephony server 150a is the primary destination of all SIP messages trying to establish a connection with users on the local area network 212. Preferably, the network telephony server 150a is also the only destination advertised to the SIP clients outside the LAN 212 on behalf of all the SIP clients residing on the LAN 212. The network telephony server 150a relays all SIP INVITE messages to the appropriate final destination (or another SIP proxy), based on a database lookup using the user database 152a. It allows all mobile clients to register with their current locations.

Similarly, the network telephony server 150b is the primary destination of all SIP messages trying to establish a connection with the data network telephones 218a-c connected to the cable network 214. Preferably, the network telephony server 150b is also the only destination advertised to the SIP clients outside the LAN 212 on behalf of all the SIP clients (e.g. data network telephones) residing on the LAN 212. The network telephony server 150b relays all SIP INVITE messages to the appropriate final destination (or another SIP proxy), based on a database lookup using the user database 152b.

2. Registration of the Telephone

The data network telephones 208a,b and 218a-c in the system 200 preferably have pre-programmed device identifiers (e.g. MAC addresses or phone numbers), represented as SIP-URL's that are of the form sip:8475551212@3com.com. After power-up, each data network telephones 208a,b and 218a-c sends a SIP REGISTER message to the default registrar, such as the network telephony servers 150a,b. When a call arrives at one of the network telephony servers 150a,b for any of the registered SIP URLs, the server will forward the call to the appropriate destination. If a data

network telephone is moved to a new location, all calls to the associated SIP URL will still be properly routed to that device. In other words, the system in FIG. 2A provides device mobility in the sense that calls will "follow" the data network telephone according to its SIP URL. This is especially useful if the data network telephone 208a,b or 218a-c is running the DHCP (Dynamic Host Configuration Protocol) so that when the location is changed, the IP address is also automatically changed.

An advantage of the system in FIG. 2A is that the network telephony connection server 150a,b may respond to REGISTER messages (for SIP and similar messages in other protocols) with a message that configures the data network telephone 208a,b or 218a-c to have a variety of ready-to-use features. The service provider may configure the telephony connection server 150a,b to enforce a particular configuration for operation, or offer the user choices of features that comprise the configuration. A data network telephone may be configured to include features such as:

- User identifier: a sequence of alphanumeric elements that uniquely identifies the user. The user identifier may be formatted as an E.164 telephone number, or as a name. The user identifier may be unique throughout the universe of users on the data network telephony system 200 (shown in FIG. 1), or it may acquire such uniqueness by association with a server identifier.
- Telephone Identifier: a sequence of alphanumeric elements that uniquely identifies the telephone. The telephone identifier may be formatted as an E.164 telephone number, or as a number, such as a MAC address. The telephone identifier may be unique throughout the universe of data network telephones on the data network telephony system 200, or it may acquire such uniqueness by association with a server identifier.
- The user's name, address and other information that may be used primarily for billing purposes. For example, the user's checking account number, credit card number or other financial information may be provided for automatic billing and payment capabilities.
- User's telephony service features. The user may subscribe, permanently or temporarily, to one or more telephony service features offered by the service provider:
  - Voice mail
  - Caller ID
  - Call Forwarding with true number portability
  - Teleconferencing
  - Commercial messaging – a service that may be made available

Bright House Networks - Ex. 1108, Page 449

in embodiments of the present invention. A user may subscribe to have the data network telephone 218 receive (or not to receive) advertisements for display on the display of the data network telephone 218.
• Commercial messaging with speed dial programming – a service that may be made available in embodiments of the present invention. A user may subscribe to have the data network telephone 218 receive (or not to receive) advertisements that program the speed dial keys of the data network telephone 218.The display of the service provider logo
• Menu of functions
• Help menu
• Speed dial key programming (*e.g.* speed dial to customer service)
• Features as standard offerings – to compete, a provider may offer features that normally cost extra (*e.g.* caller ID, etc.) as standard features
• Packaged configurations – Features and offerings may be grouped as distinctly priced packages
• Functions using PDA connectivity (*e.g.* Remote Whiteboard communication, control of telephone use through PDA)

TABLE A

FIG. 3A shows the data network telephone 208 for User A begin the registration process. User A's telephone 208 may be brand new, in which case, the process described with reference to FIGs. 3A-3D illustrates the ease with which the data network telephone 208 may be installed and used immediately. When User A connects the data network telephone 208 to the network 206 (NOTE: connection may be through an access network), the data network 208 uses its MAC address as an initial telephone identifier. The data network telephone 208 retrieves an IP address using a DHCP Discover message exchange, shown at 271, with a DHCP server 161.

The data network telephone 208 then sends a registration message as shown at 273. In a preferred embodiment, the registration message includes a temporary user identifier (xxxxxxxxxxxxxx) and a version identifier that identifies the current version of the configuration of the telephone 208. FIG. 3B shows a sample registration request at 472 in a message flow diagram.

Referring back to FIG. 3A, the telephony connection server 150a may respond to the registration message at 273 with a response message as shown at 275. The message at 275 includes an auto-configuration command which forces the data

network telephone 208 to implement a new configuration. The new configuration may be an update to the current version identified by the current version identifier. FIG. 3B shows a sample of the auto-configuration response at 474. In a preferred embodiment, the auto-configuration message is communicated in the message body of a SIP response message.

The response message at 275 in FIG. 3A may also comprise an exchange of messages using a data channel. FIG. 3B shows a first data channel message 480 having a query to the user in TCP transmitted as TCP/IP. It is to be understood that any other protocol may be used. The message may be formatted for display on the data network telephone 208, as voice over data in a voice mail session, or any other manner conforming to the user interface capabilities of the telephone 208. The user may respond by saying "Yes"/"No", selecting a menu item by touching the screen, pressing a yes/no button, or any other manner conforming to the user interface capabilities of the telephone 208.

The user's response is communicated in a second data channel 482 to the network telephony connection server 150a. If the response was a "Yes" such that the user wants the configuration of the data network telephone 208 updated, the network telephony connection server 150a responds with the updated version at 484.

Referring to FIG. 3C, the data network telephone 208 is shown as having been registered. The data network telephone 208 is shown configured with a phone number (user identifier), a service provider logo (*xyz*) and a hotlink, or display button programmed to dial customer service at 116 for the service provider. The service provider host 160 may configure the data network telephone with a full set of features, such as from those listed above, to allow the user to make full use of the data network telephone 208.

In an alternative embodiment, the registration process leaves the data network telephone 208 with a rudimentary configuration barely able to make any telephone calls. For example, the process may leave the data network telephone 208 capable of making only one call, to customer service for a user controlled provisioning of the system. The user may also provision the telephone 208 using a connection to the service provider's web page.

Bright House Networks - Ex. 1108, Page 451

As shown in FIG. 4A, the user at data network telephone 208 makes a call at 281 to the service provider server 120 with its user identifier (xxxxxxxxxxxxxx), and a command to request service provisioning. A provisioning function, in response to the telephone call at 281, establishes a data connection 283 to perform the transfer (which may be with voice over data signals) of information. The service provider server 120 may send a form, or present an order screen 316, at the telephone requesting information from the user. The user may also use a workstation and connect at 287 to a web page 451 at the service provider server 120 and enter the information at a web page order screen 317. The information requested in both the order screen 316 and the web page order screen 317 is illustrated in FIG. 4B. One of ordinary skill in the art will appreciate that the web page order screen 317 is illustrated as an example of the type of information requested during a provisioning session. More or less information may be requested.

Referring to FIG. 4C, when the user has entered the data requested in the order screen, the service provider server 120 leaves a ready display 416 at the data network telephone 208 indicative of the type of configuration provided by the provisioning process. The service provider server 120 may also leave a confirmatory message 417 on the workstation (or on the data network telephone, either on the display or by voice) indicating what happens next. FIG. 4D shows an example of such a confirmatory message. Once the user responds to the email, the data network telephone 208 is ready for use.

The service provider server 120 also builds and stores in the service provider database 122 a user account 455 for the user as shown in FIG. 4A.

3. A Telephone Call

FIG. 5 shows the interaction between the components in FIG. 2A in performing a telephone call. As shown in FIG. 5, a telephony service provider (e.g. ISP) provides telephone service using the host 160. The telephony service provider may also provide data connectivity services and other services relating to communication (*e.g.* advertising) on the data network 206. With User A and User B registered with network telephony connection servers 150a,b respectively, the telephony connection server 150b operates as a proxy server (e.g. as a SIP proxy server) for User B's data network telephone 218. When other users, such as User A,

Bright House Networks - Ex. 1108, Page 452

attempt to call User B, the call setup will be made through the telephony connection server 150b.

As shown in FIG. 5, User A initiates a telephone call from User A's data network telephone 208 to the data network telephone 218 belonging to User B. User A begins the telephone call by dialing User B's user identifier using the keypad 118 (or a PID, or a speed dial key, or using any other manner). The data network telephone 208 sends a request to initiate a call to User B at 280 to the data network telephony connection 150b providing service to User B. The request to initiate a call to User B at 280 includes User B's user identifier as the callee, User A's user identifier as the caller and the protocols supported by User A's data network telephone 208.

The telephony connection server 150b sends the request to the data network telephone 218 identified in the user database 152b as belonging to User B, preferably, in accordance with its role as a proxy server, and preferably as defined in the SIP protocol. The data network telephone 218 responds with a response message (not shown in FIG. 5) to the telephony connection server 150b. The telephony connection server 150b receives the response message and sends the response message to User A's data network telephone 208 as shown at 282.

User A's data network telephone 208 receives the response message and may prepare an acknowledgement message if called for by the protocol (e.g. the SIP protocol).

User A's data network telephone 208 also establishes a voice over data channel 284 to permit communication between User A and User B. The voice over data channel 284 is preferably a data communications channel in which voice signals that have been converted to digital information are being carried as data messages in accordance with a selected protocol. The data messages include User B's message 286 and User A's messages 288 as shown in FIG. 5. User B's message 286 and User A's message 288 both include an IP protocol component, a UDP component, an RTP component and a G.72x component.

The IP protocol component permits routing of the messages 286, 288 in accordance with an Internet Protocol (e.g. Ipv4, IPV6, etc.). The UDP component permits transport as a User Datagram in a connection-less environment in accordance

with the User Datagram Protocol (UDP). The RTP component is the chosen format for communicating the voice signals as data. The G.72x component indicates how the voice signals, once extracted from the RTP component are to be processed to produce audio. The G.72x indication represents that the voice signals may conform to ITU-T Recommendation G.721, ITU-T Recommendation G.722, ITU-T Recommendation G.723, ITU-T Recommendation G.723.1, ITU-T Recommendation G.728 or ITU-T Recommendation G.729. The voice signals may also conform to ITU-T Recommendation G.711 or to any other suitable protocol.

One of ordinary skill in the art will appreciate that the voice over data channel 284 may be implemented using different protocols than the ones shown in FIG. 5. Moreover, when the signaling protocol used to establish the telephone call permits negotiation of supported protocols as is done with the preferred SIP protocol, the voice over data channel 284 may be asymmetrical; that is, User A's messages 288 may be different from User B's messages 286.

The telephone call carried out over the voice over data channel 284 proceeds until one or both users terminate the call. During termination or teardown of the call, the telephony connection server 150b performs in accordance with the selected session protocol such as the SIP protocol.

FIGs. 3A-5 show systems and methods for registering and auto-configuring a data network telephone 208 in accordance with embodiments of the present invention. Those of ordinary skill in the art will appreciate that the systems and methods described above are examples. Other embodiments may fall within the scope of the claims.

D. Methods For Providing Registration and Provisioning of a Data Network Telephone Using A Data Network Telephony System

FIGs. 6-8 illustrate methods for providing registration and provisioning for a data network telephone that may be performed using any suitable data network telephony system. FIG. 6 is a flowchart showing a method of configuring a data network telephone by registering for service with a service provider. As shown at step 500 in FIG. 6, a data network telephone starts by obtaining an IP address from a DHCP server. At step 502, a request to register message is sent to a service provider server. The service provider server may have a designated default proxy server to use,

or may provide the appropriate server with a call management protocol and/or registration server. In the request to register message, the data network telephone includes a current version of the telephone configuration as shown at step 502. The version of the telephone configuration may include different combinations of the features listed above in Table A.

At step 506, the service provider server 120 (FIG. 1) checks the telephone version with the latest version available. An OR step 506 in the flowchart of FIG. 6 indicates that alternative steps may be taken. At step 507, the service provider server 120 may automatically re-configure the data network telephone. Alternatively, the service provider server may query the user to determine whether to upgrade to a new version at decision block 508. A yes response to the query leads to step 510 to re-configure the data network telephone.

One advantage of registering in the manner shown in FIG. 6 is that a full-function feature laden configuration of the data network telephone is possible using a register request.

FIG. 7 is a flowchart that shows a method for registering the data network telephone with partial or low-level service so that the user may provision the data network telephone as a completely personalized data network telephone. At step 600 in FIG. 7, the data network telephone requests an IP address from a DHCP server. The request to register is sent at step 602 to the default proxy server. At step 604, the user proceeds to a method for provisioning the data network telephone.

FIG. 8 shows a preferred method for provisioning the data network telephone. At step 700, the user connects to the service provider's web page for providing user account information. At step 702, the user enters billing information. At step 704, the user enters user-selectable user identifiers, passwords, email identifiers, etc. At step 706, the user selects features that the user would like to add, and at step 708, the account information is submitted. A confirmatory message and email is received at step 710. When the user responds to the email at step 712, the data network telephone may be used.

While the invention has been described in conjunction with presently preferred embodiments of the invention, persons of skill in the art will appreciate that variations may be made without departure from the scope and spirit of the invention. For

Bright House Networks - Ex. 1108, Page 455

example, the access networks shown in FIG. 2A may comprise any other suitable type of local area network or service infrastructure.

In addition, protocols of various types are referenced throughout. While preferred and alternative embodiments may implement selected protocols, any suitable replacement protocol not mentioned, or any function not part of a protocol used to replace a corresponding function from a protocol may be implemented without departing from the scope of the invention.

This true scope and spirit is defined by the appended claims, interpreted in light of the foregoing.

Bright House Networks - Ex. 1108, Page 456

WE CLAIM:

1. A system for providing telephone service comprising:

at least one data network telephone connected to a data network operable to provide a plurality of data communications channels, the data network telephone being operable to communicate voice signals as data packets on a voice over data channel, the voice over data channel being one of the plurality of data communications channels on the data network containing packetized voice signals;

the data network telephone being operable to convert data packets communicated on the voice over data channel to voice;

the data network telephone being operable to perform a plurality of feature enhancements; and

a service provider server connected to the data network, the service provider server operable to establish a user interactive connection to obtain a user-selected configuration comprising at least one feature enhancement of the data network telephone.

2. The system of Claim 1 wherein the service provider server includes a registration function to automatically configure the data network telephone with a first configuration.

3. The system of Claim 1 wherein the service provider server includes a registration function to query a user to determine whether to configure the data network telephone with a second configuration.

4. A service provider server comprising:

a network interface for communicating over at least one data communications channel;

an accounts database for accessing a user account having a user telephone service account for using a data network telephone;

Bright House Networks - Ex. 1108, Page 457

a provisioning function to provide a feature request form to a user on one of the data communications channels, the feature request form being operable to receive user input to select at least one feature enhancement; and

a service configuration function to send a message to the data network telephone to activate the service enhancements.

5. The service provider server of Claim 4 further comprising a web page in the provisioning function to present the feature request form to the user via a web browser.

6. The service provider server of Claim 5 wherein the provisioning function is accessed via an E.164 telephone number.

7. A method for providing a user selected configuration for telephone service using a data network telephone comprising the steps of:

receiving a request to configure the data network telephone from the user;

presenting a user feature request form prompting the user to select features;

setting a user account in accordance with the selected features; and

sending a configuration message to the data network telephone.

8. The method of Claim 7 further comprising the step of sending a confirming message displaying the user selected features.

Bright House Networks - Ex. 1108, Page 458

Bright House Networks - Ex. 1108, Page 459

FIG. 1

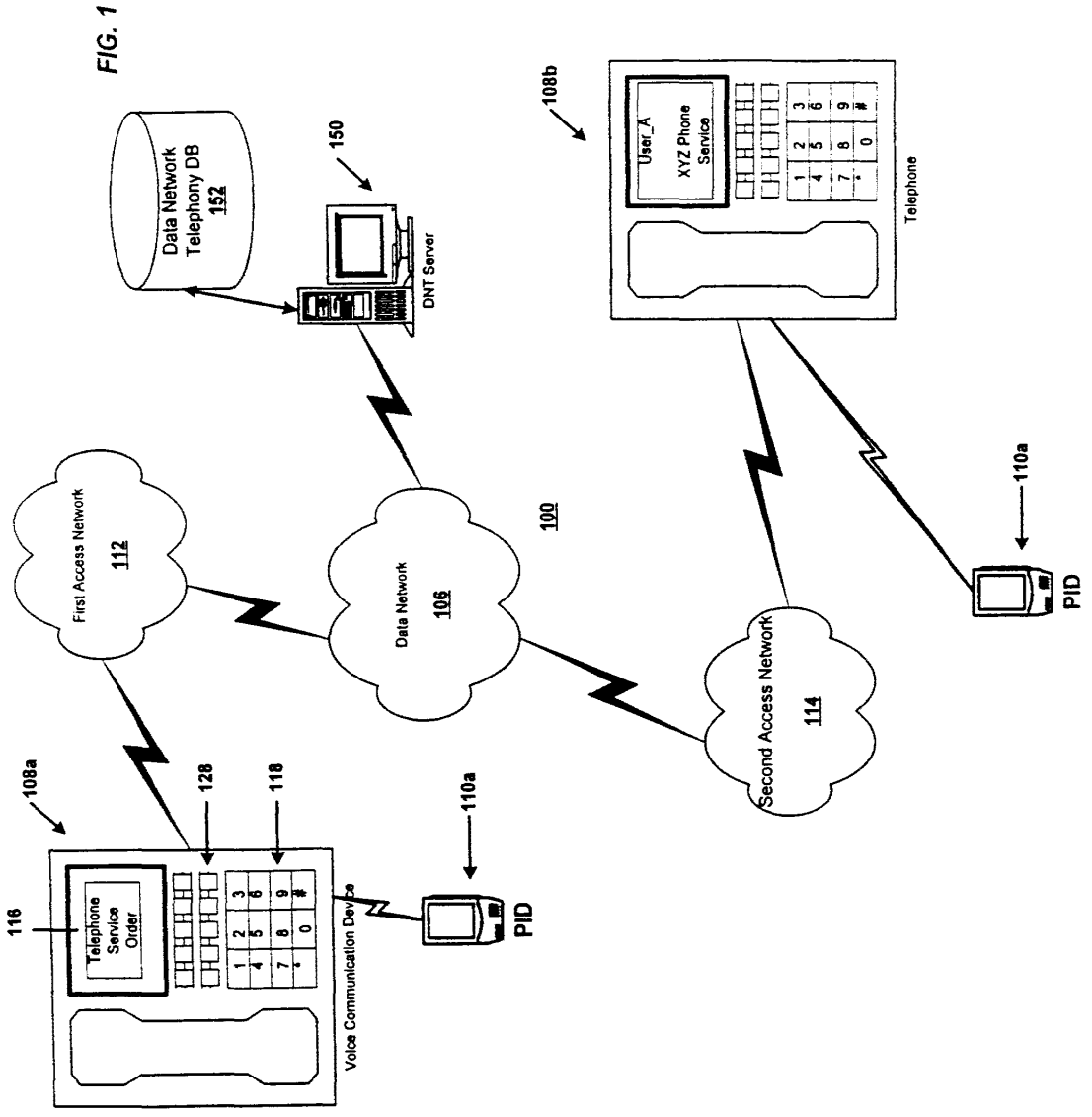

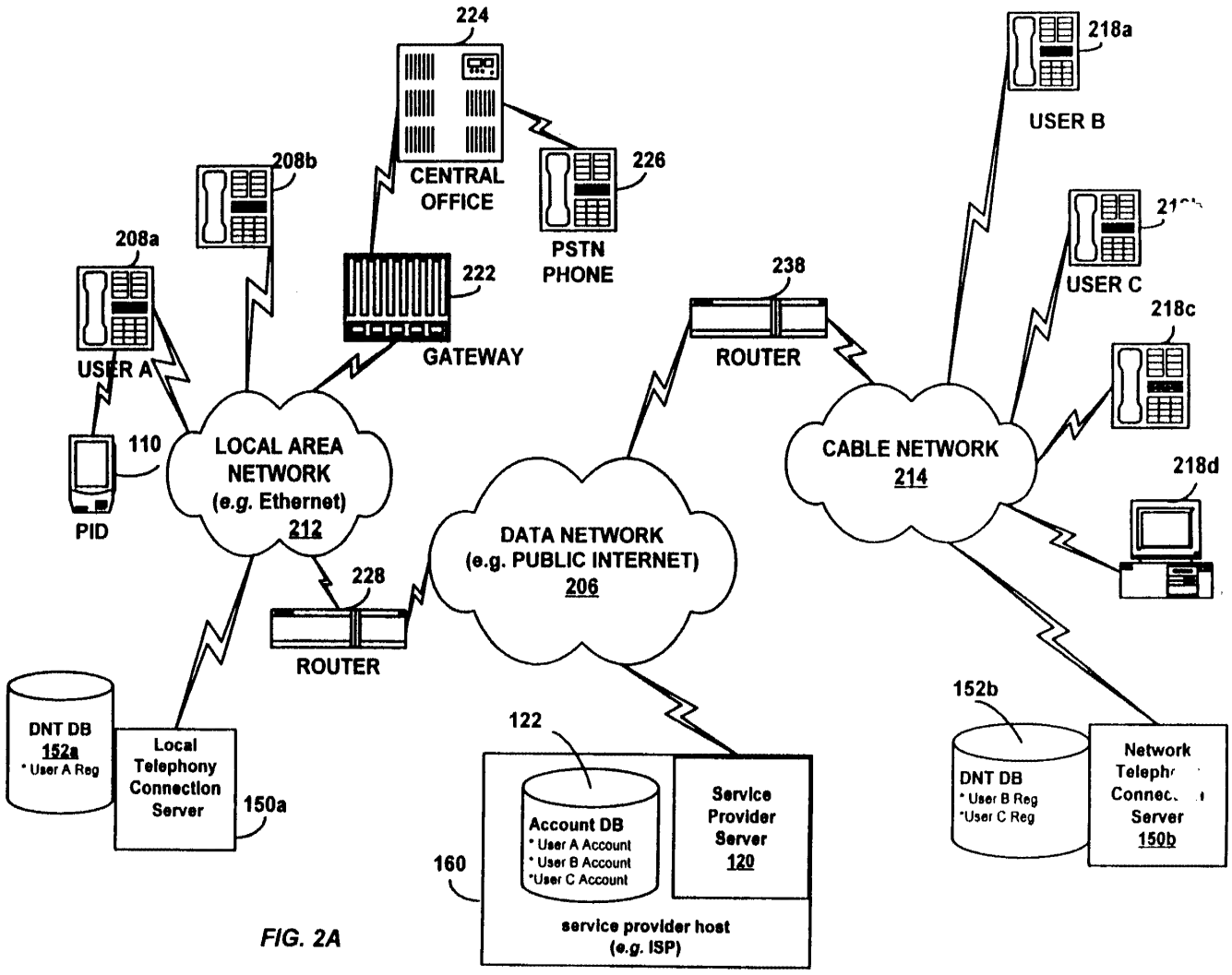
224
CENTRAL OFFICE
226
PSTN PHONE
208b
208a
USER A
222
GATEWAY
238
ROUTER
218a
USER B
USER C
218c
218d
110
PID
LOCAL AREA NETWORK (e.g. Ethernet) 212
DATA NETWORK (e.g. PUBLIC INTERNET) 206
CABLE NETWORK 214
228
ROUTER
DNT DB 152a
* User A Reg
Local Telephony Connection Server
150a
122
Account DB
* User A Account
* User B Account
*User C Account
Service Provider Server 120
160
service provider host (e.g. ISP)
152b
DNT DB
* User B Reg
*User C Reg
Network Telephony Connection Server 150b

FIG. 2A

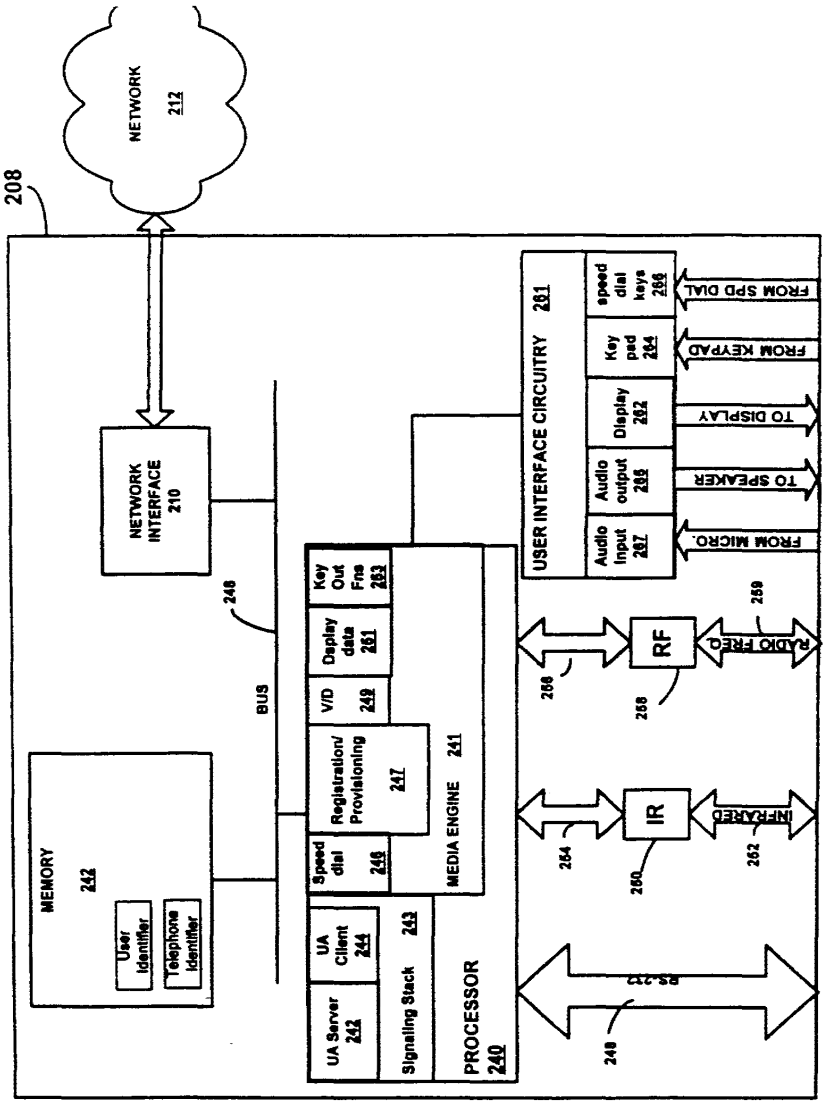

FIG. 2B

Bright House Networks - Ex. 1108, Page 461

FIG. 3A

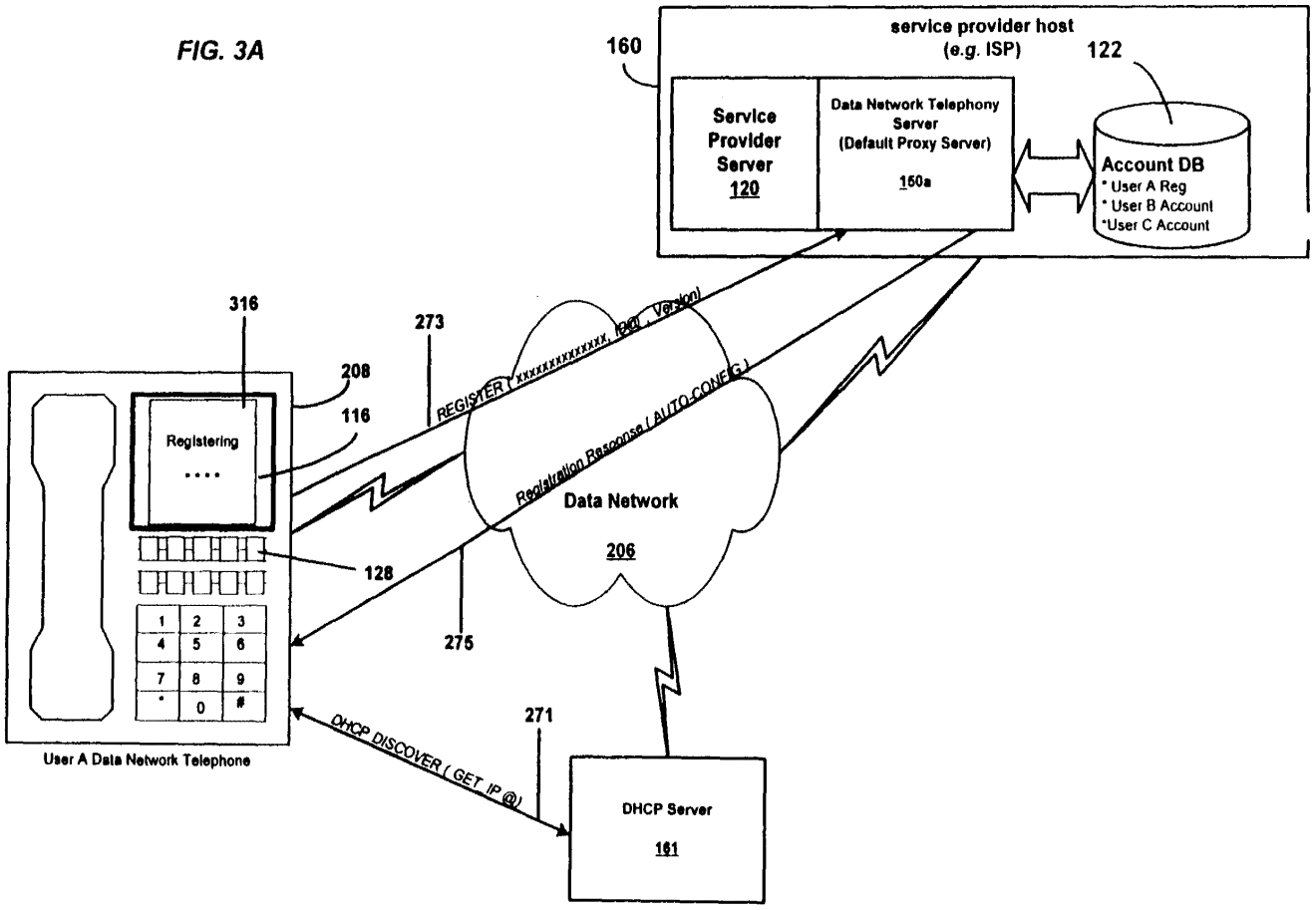
service provider host
(e.g. ISP)
160
122
Service Provider Server 120
Data Network Telephony Server (Default Proxy Server)
160a
Account DB
* User A Reg
* User B Account
*User C Account
316
273
208
116
REGISTER (xxxxxxxxxxxxx, IP@ , Version)
Registration Response (AUTO-CONFIG)
Registering
....
Data Network
206
128
275
1 2 3
4 5 6
7 8 9
* 0 #
271
DHCP DISCOVER (GET IP @)
User A Data Network Telephone
DHCP Server
161

FIG. 3B

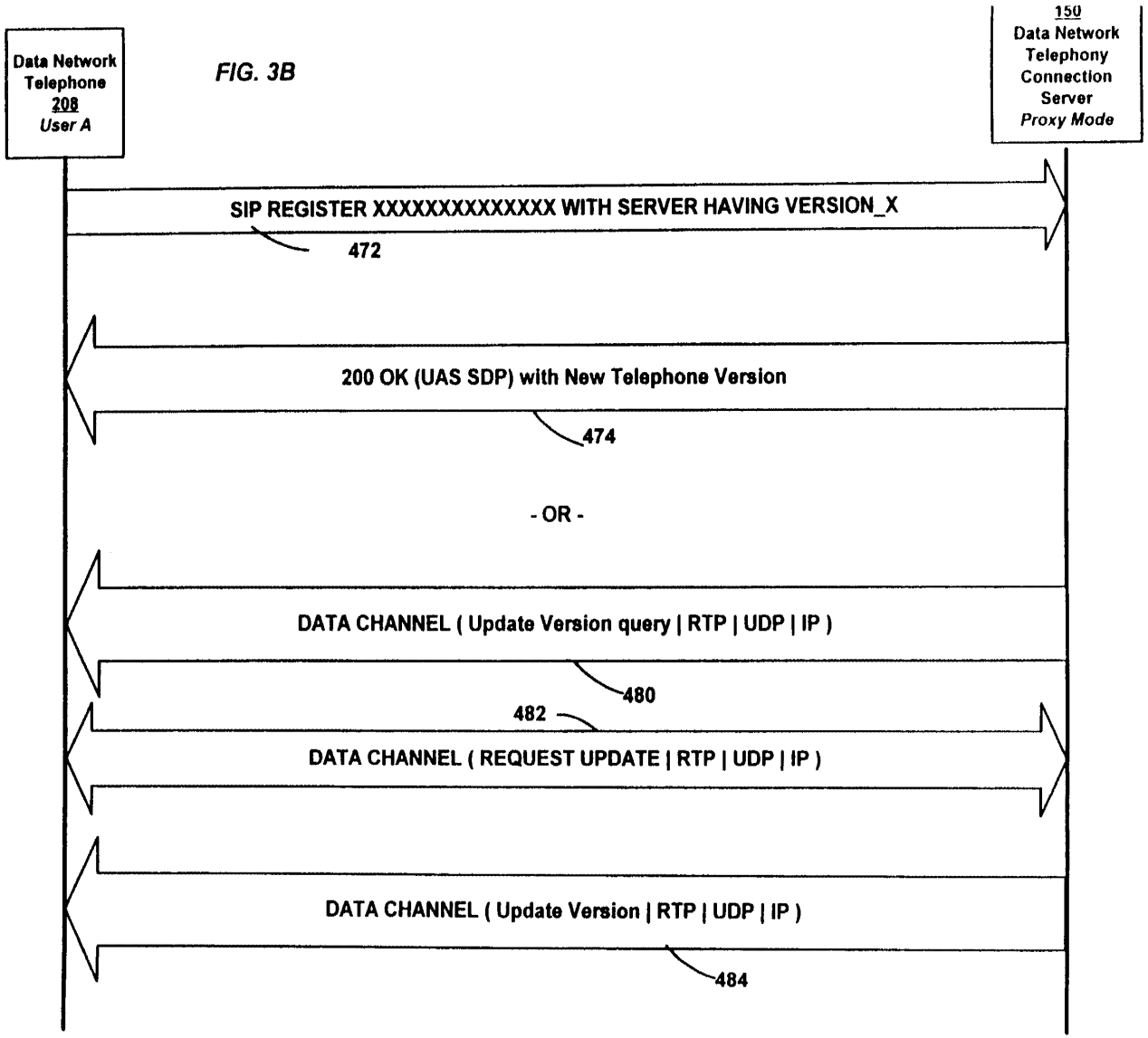
Data Network Telephone 208 User A
150 Data Network Telephony Connection Server Proxy Mode
SIP REGISTER XXXXXXXXXXXXX WITH SERVER HAVING VERSION_X
472
200 OK (UAS SDP) with New Telephone Version
474
- OR -
DATA CHANNEL (Update Version query | RTP | UDP | IP)
480
482
DATA CHANNEL (REQUEST UPDATE | RTP | UDP | IP)
DATA CHANNEL (Update Version | RTP | UDP | IP)
484

FIG. 3C

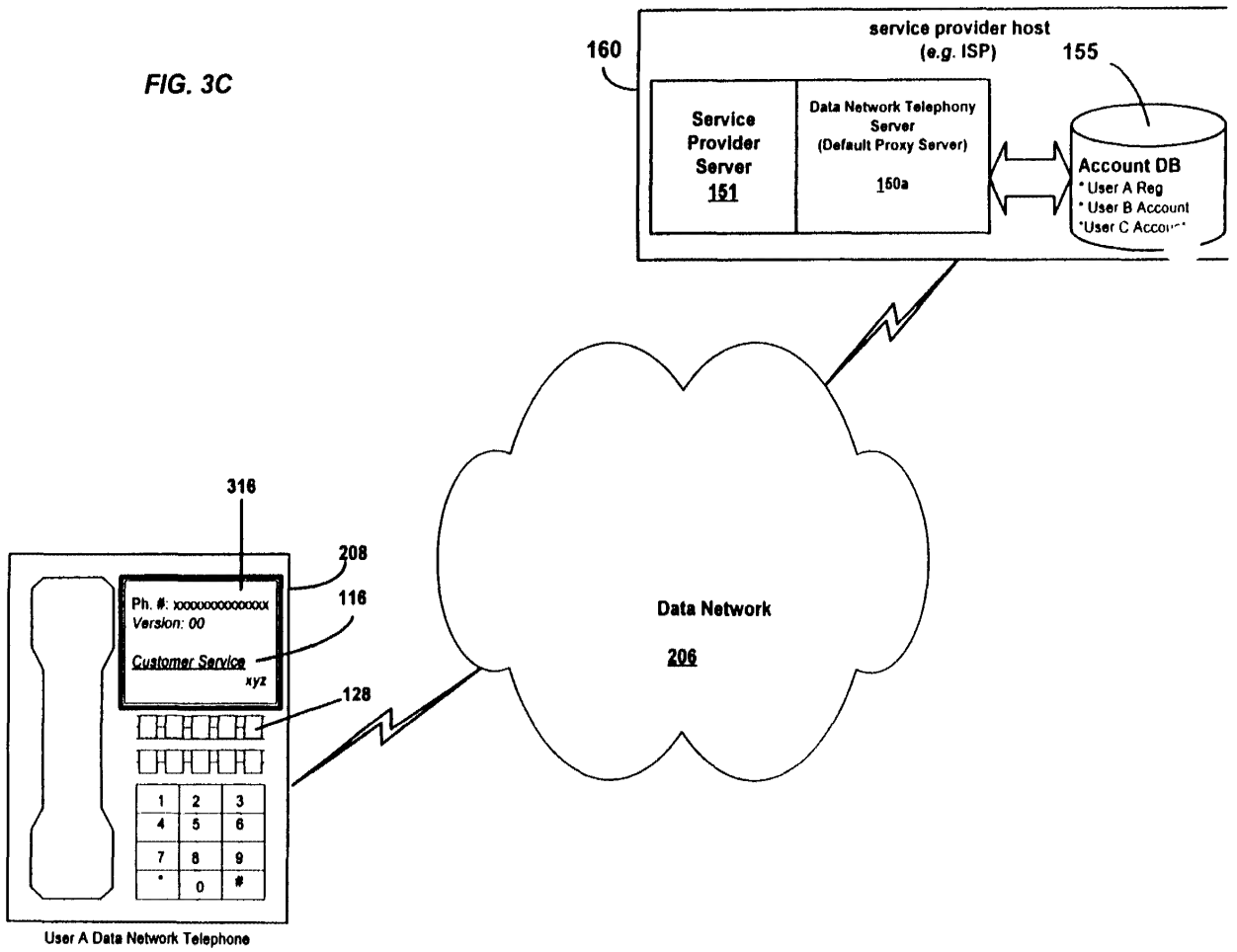

Bright House Networks - Ex. 1108, Page 464

FIG. 4A

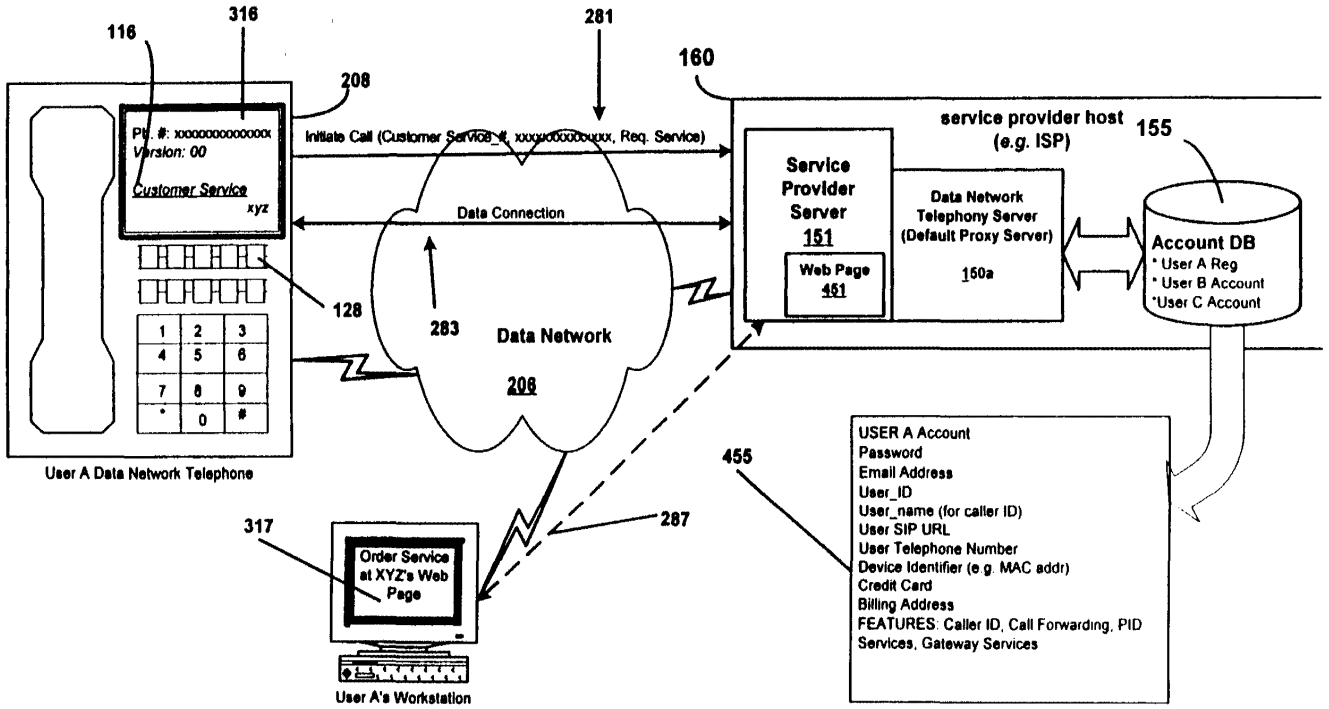
116
316
281
160
208
Ph. #: xxxxxxxxxxxxx
Version: 00
Customer Service
xyz
Initiate Call (Customer Service #, xxxxxxxxxxxx, Req. Service)
Data Connection
service provider host
(e.g. ISP)
155
Service Provider Server
151
Web Page
451
Data Network Telephony Server
(Default Proxy Server)
150a
Account DB
* User A Reg
* User B Account
*User C Account
128
283
Data Network
206
1 2 3
4 5 6
7 8 9
* 0 #
User A Data Network Telephone
455
USER A Account
Password
Email Address
User_ID
User_name (for caller ID)
User SIP URL
User Telephone Number
Device Identifier (e.g. MAC addr)
Credit Card
Billing Address
FEATURES: Caller ID, Call Forwarding, PID Services, Gateway Services
317
Order Service at XYZ's Web Page
287
User A's Workstation

FIG. 4B

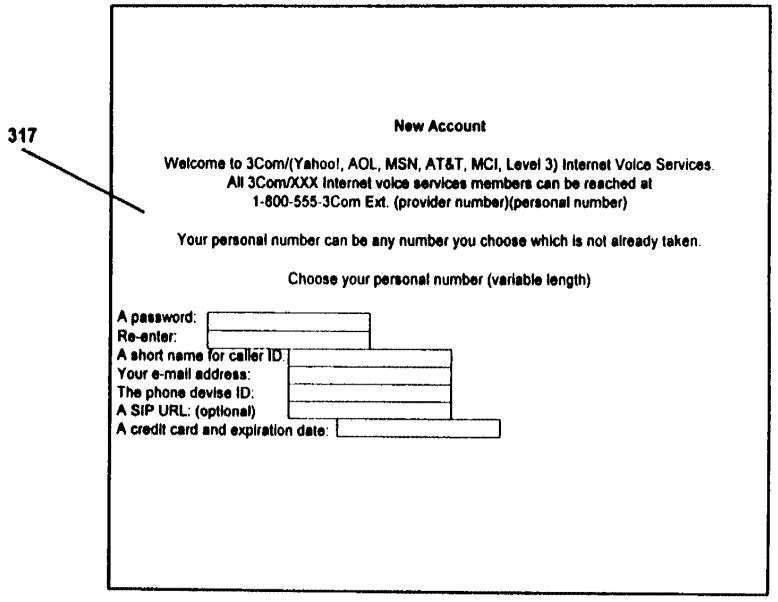
317
New Account
Welcome to 3Com/(Yahoo!, AOL, MSN, AT&T, MCI, Level 3) Internet Voice Services.
All 3Com/XXX Internet voice services members can be reached at
1-800-555-3Com Ext. (provider number)(personal number)
Your personal number can be any number you choose which is not already taken.
Choose your personal number (variable length)
A password:
Re-enter:
A short name for caller ID:
Your e-mail address:
The phone devise ID:
A SIP URL: (optional)
A credit card and expiration date:

FIG. 4C

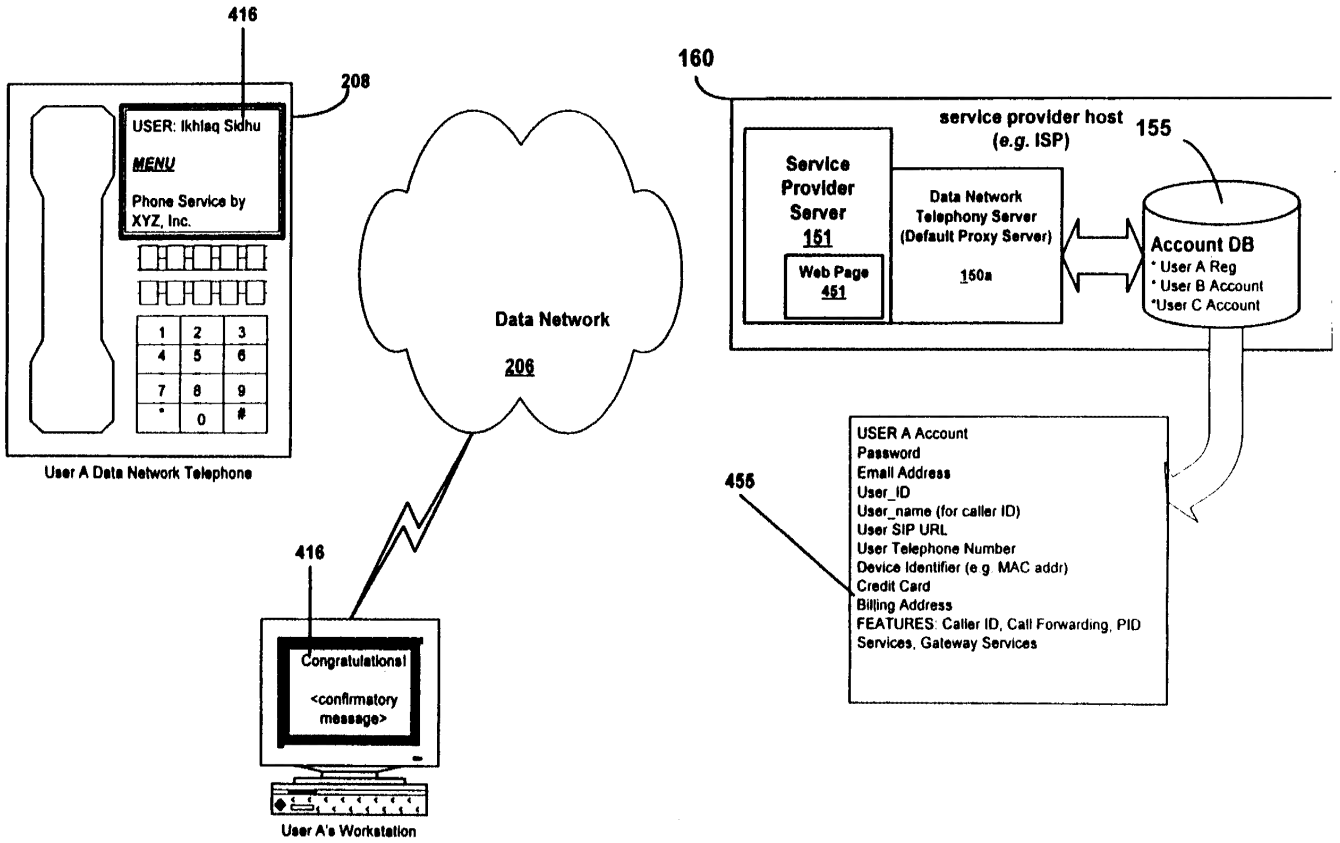
416
208
USER: Ikhlaq Sidhu
MENU
Phone Service by XYZ, Inc.
1 2 3
4 5 6
7 8 9
* 0 #
User A Data Network Telephone
Data Network
206
160
service provider host
(e.g. ISP)
155
Service Provider Server
151
Web Page
451
Data Network Telephony Server
(Default Proxy Server)
150a
Account DB
* User A Reg
* User B Account
*User C Account
455
USER A Account
Password
Email Address
User_ID
User_name (for caller ID)
User SIP URL
User Telephone Number
Device Identifier (e.g. MAC addr)
Credit Card
Billing Address
FEATURES: Caller ID, Call Forwarding, PID Services, Gateway Services
416
Congratulations!
<confirmatory message>
User A's Workstation

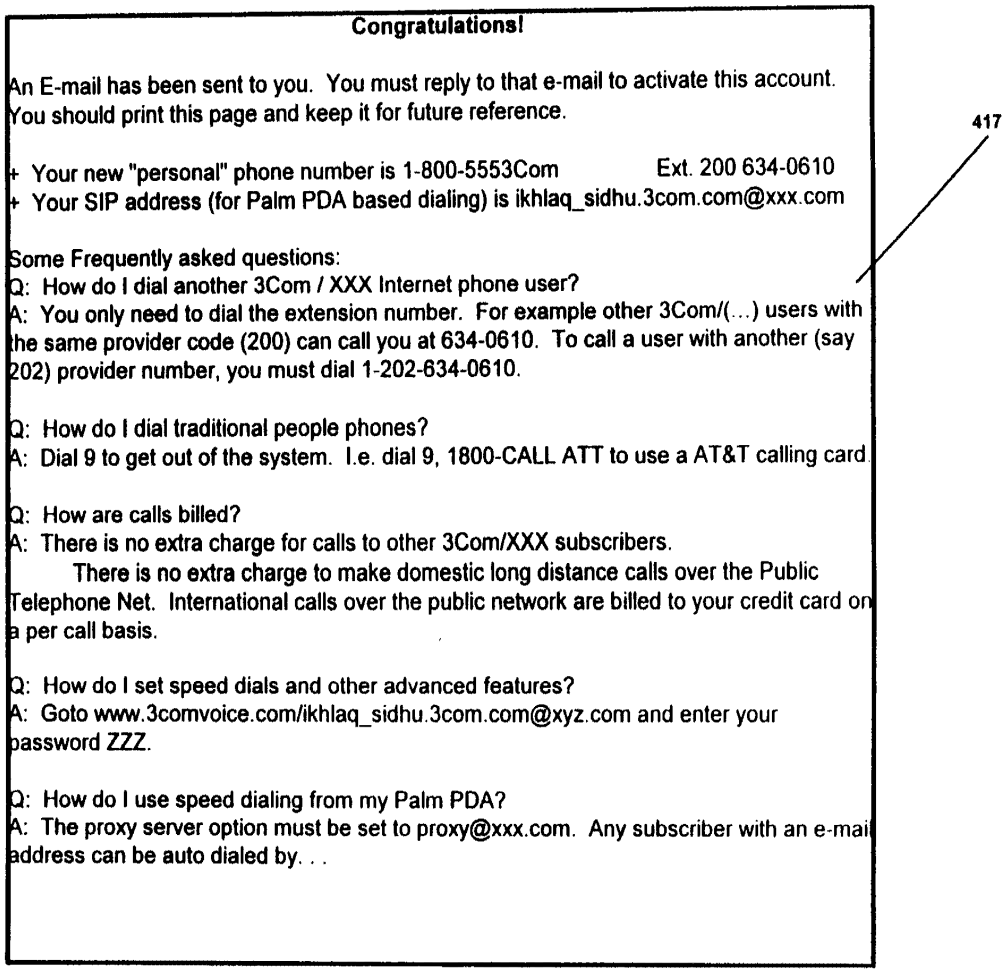
Congratulations!
An E-mail has been sent to you. You must reply to that e-mail to activate this account.
You should print this page and keep it for future reference.
417
+ Your new "personal" phone number is 1-800-5553Com Ext. 200 634-0610
+ Your SIP address (for Palm PDA based dialing) is ikhlaq_sidhu.3com.com@xxx.com
Some Frequently asked questions:
Q: How do I dial another 3Com / XXX Internet phone user?
A: You only need to dial the extension number. For example other 3Com/(...) users with the same provider code (200) can call you at 634-0610. To call a user with another (say 202) provider number, you must dial 1-202-634-0610.
Q: How do I dial traditional people phones?
A: Dial 9 to get out of the system. I.e. dial 9, 1800-CALL ATT to use a AT&T calling card.
Q: How are calls billed?
A: There is no extra charge for calls to other 3Com/XXX subscribers.
There is no extra charge to make domestic long distance calls over the Public Telephone Net. International calls over the public network are billed to your credit card on a per call basis.
Q: How do I set speed dials and other advanced features?
A: Goto www.3comvoice.com/ikhlaq_sidhu.3com.com@xyz.com and enter your password ZZZ.
Q: How do I use speed dialing from my Palm PDA?
A: The proxy server option must be set to proxy@xxx.com. Any subscriber with an e-mail address can be auto dialed by. . .

FIG. 4D

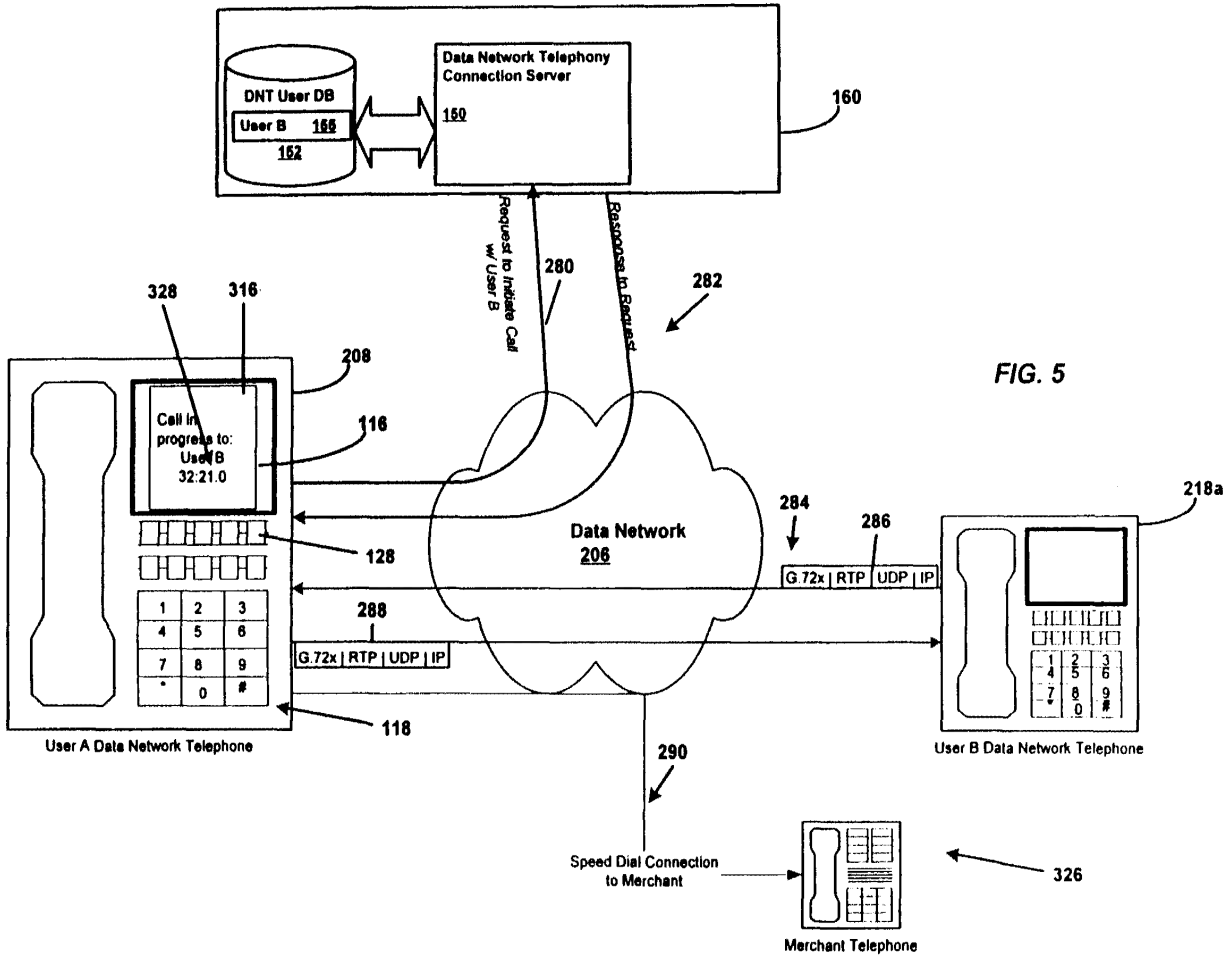
Data Network Telephony Connection Server
150
160
DNT User DB
User B 165
152
Request to Initiate Call w/ User B
280
Response to Request
282
328
316
208
116
Call in progress to: User B 32:21.0
128
284
286
218a
Data Network
206
G.72x | RTP | UDP | IP
288
G.72x | RTP | UDP | IP
118
User A Data Network Telephone
User B Data Network Telephone
290
Speed Dial Connection to Merchant
326
Merchant Telephone

FIG. 5

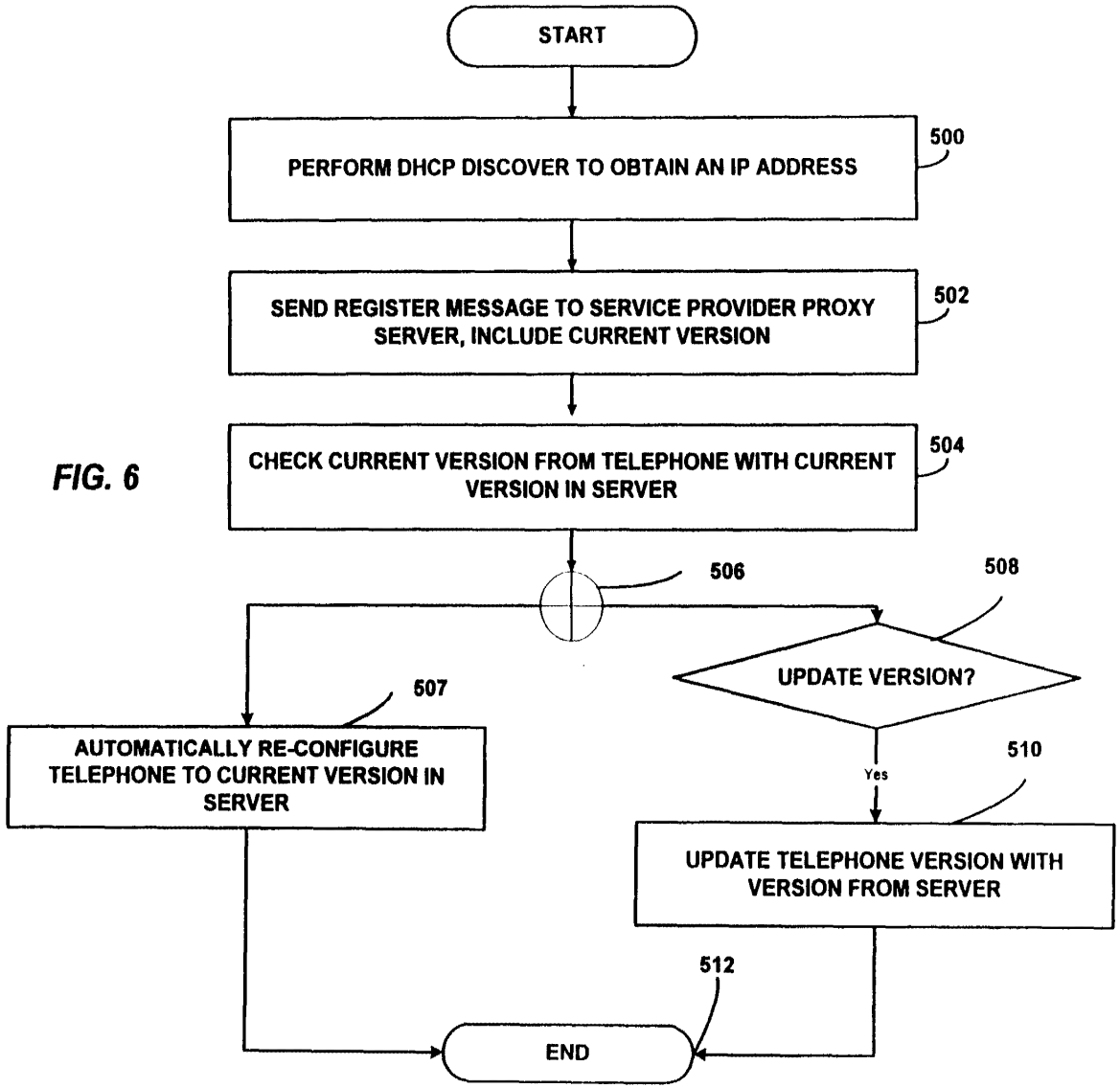
START
PERFORM DHCP DISCOVER TO OBTAIN AN IP ADDRESS
500
SEND REGISTER MESSAGE TO SERVICE PROVIDER PROXY SERVER, INCLUDE CURRENT VERSION
502
CHECK CURRENT VERSION FROM TELEPHONE WITH CURRENT VERSION IN SERVER
504
506
508
UPDATE VERSION?
507
AUTOMATICALLY RE-CONFIGURE TELEPHONE TO CURRENT VERSION IN SERVER
Yes
510
UPDATE TELEPHONE VERSION WITH VERSION FROM SERVER
512
END

FIG. 6

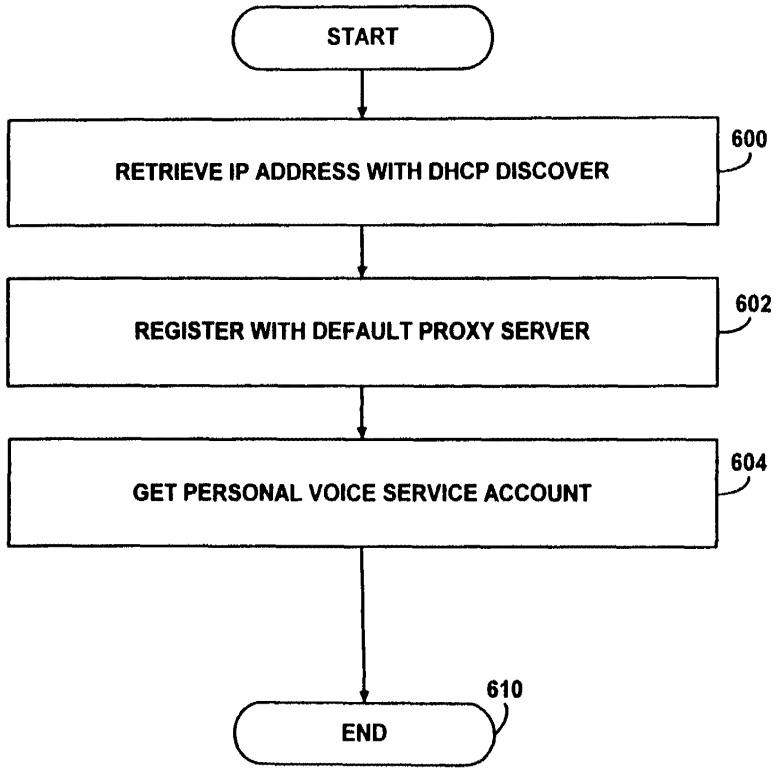
START
RETRIEVE IP ADDRESS WITH DHCP DISCOVER
600
REGISTER WITH DEFAULT PROXY SERVER
602
GET PERSONAL VOICE SERVICE ACCOUNT
604
END
610

FIG. 7

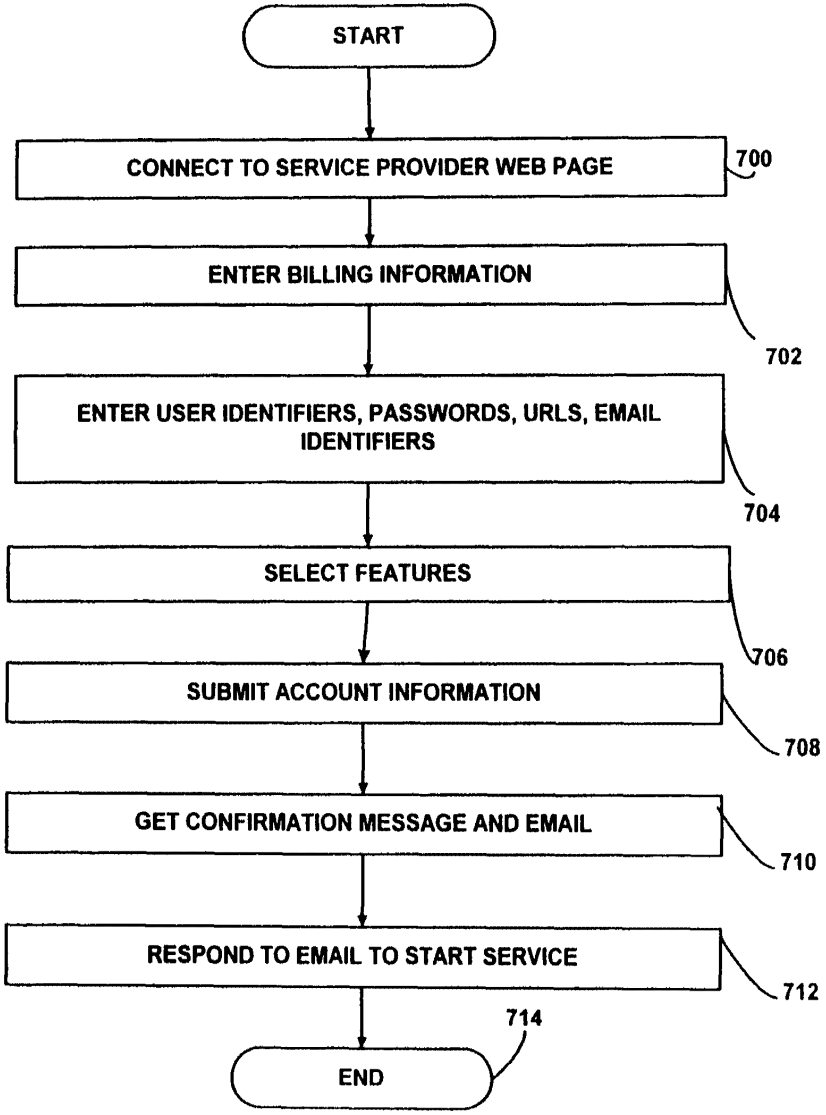
START
CONNECT TO SERVICE PROVIDER WEB PAGE
700
ENTER BILLING INFORMATION
702
ENTER USER IDENTIFIERS, PASSWORDS, URLS, EMAIL IDENTIFIERS
704
SELECT FEATURES
706
SUBMIT ACCOUNT INFORMATION
708
GET CONFIRMATION MESSAGE AND EMAIL
710
RESPOND TO EMAIL TO START SERVICE
712
714
END

FIG. 8

INTERNATIONAL SEARCH REPORT

Interr nal Application No
PCT/US 00/26094

A. CLASSIFICATION OF SUBJECT MATTER
IPC 7 H04M3/42 H04Q3/00 H04M7/00

According to International Patent Classification (IPC) or to both national classification and IPC

B. FIELDS SEARCHED

Minimum documentation searched (classification system followed by classification symbols)
IPC 7 H04M H04Q

Documentation searched other than minimum documentation to the extent that such documents are included in the fields searched

Electronic data base consulted during the international search (name of data base and, where practical, search terms used)
INSPEC, EPO-Internal, WPI Data

C. DOCUMENTS CONSIDERED TO BE RELEVANT

Category °	Citation of document, with indication, where appropriate, of the relevant passages	Relevant to claim No.
X	DALGIC I ET AL: "TRUE NUMBER PORTABILITY AND ADVANCED CALL SCREENING IN A SIP-BASED IP TELEPHONY SYSTEM" IEEE COMMUNICATIONS MAGAZINE,IEEE SERVICE CENTER. PISCATAWAY, N.J,US, vol. 37, no. 7, July 1999 (1999-07), pages 96-101, XP000835310 ISSN: 0163-6804 page 96, left-hand column, line 1 - line 37 page 97, left-hand column, line 46 -page 100, right-hand column, line 45 --- -/--	1-8

[X] Further documents are listed in the continuation of box C.

[X] Patent family members are listed in annex.

° Special categories of cited documents :

"A" document defining the general state of the art which is not considered to be of particular relevance

"E" earlier document but published on or after the international filing date

"L" document which may throw doubts on priority claim(s) or which is cited to establish the publication date of another citation or other special reason (as specified)

"O" document referring to an oral disclosure, use, exhibition or other means

"P" document published prior to the international filing date but later than the priority date claimed

"T" later document published after the international filing date or priority date and not in conflict with the application but cited to understand the principle or theory underlying the invention

"X" document of particular relevance; the claimed invention cannot be considered novel or cannot be considered to involve an inventive step when the document is taken alone

"Y" document of particular relevance; the claimed invention cannot be considered to involve an inventive step when the document is combined with one or more other such documents, such combination being obvious to a person skilled in the art.

"&" document member of the same patent family

Date of the actual completion of the international search	Date of mailing of the international search report
22 January 2001	31/01/2001

Name and mailing address of the ISA	Authorized officer
European Patent Office, P.B. 5818 Patentlaan 2 NL - 2280 HV Rijswijk Tel. (+31-70) 340-2040, Tx. 31 651 epo nl, Fax: (+31-70) 340-3016	Gkeli, M

1

Form PCT/ISA/210 (second sheet) (July 1992)

Bright House Networks - Ex. 1108, Page 473

INTERNATIONAL SEARCH REPORT

Interr. nal Application No
PCT/US 00/26094

C.(Continuation) DOCUMENTS CONSIDERED TO BE RELEVANT

Category °	Citation of document, with indication,where appropriate, of the relevant passages	Relevant to claim No.
Y	US 5 742 905 A (BROCKMAN JAMES JOSEPH ET AL) 21 April 1998 (1998-04-21) column 5, line 28 -column 8, line 53 column 24, line 54 -column 27, line 12 column 29, line 27 -column 33, line 3 column 34, line 10 -column 36, line 51 figures 1-4,21,24,28-45	1-8
Y	WO 98 04065 A (BELL COMMUNICATIONS RES) 29 January 1998 (1998-01-29) page 6, line 9 -page 10, line 2 page 11, line 16 -page 16, line 21 figures 1-3	1-8
X	US 5 838 665 A (HABER ALAN P ET AL) 17 November 1998 (1998-11-17)	1-4,7,8
A	column 1, line 66 -column 2, line 27 column 2, line 51 -column 3, line 38 figure 1	5,6

Form PCT/ISA/210 (continuation of second sheet) (July 1992)

Bright House Networks - Ex. 1108, Page 474

INTERNATIONAL SEARCH REPORT

...rormation on patent family members

Inter nal Application No
PCT/US 00/26094

Patent document cited in search report	Publication date	Patent family member(s)	Publication date
US 5742905 A	21-04-1998	CA 2199802 A	28-03-1996
		EP 0782805 A	09-07-1997
		JP 9511884 T	25-11-1997
		WO 9609714 A	28-03-1996
		US 5742668 A	21-04-1998
WO 9804065 A	29-01-1998	US 6115737 A	05-09-2000
		CA 2260158 A	29-01-1998
		CN 1226350 A	18-08-1999
		EP 0914731 A	12-05-1999
		JP 11514820 T	14-12-1999
US 5838665 A	17-11-1998	NONE	

Form PCT/ISA/210 (patent family annex) (July 1992)

(12) INTERNATIONAL APPLICATION PUBLISHED UNDER THE PATENT COOPERATION TREATY (PCT)

(19) World Intellectual Property Organization
International Bureau

(43) International Publication Date
5 April 2001 (05.04.2001)

PCT

(10) International Publication Number
WO 01/24498 A1

(51) International Patent Classification[7]: H04M 3/56

(21) International Application Number: PCT/US00/41020

(22) International Filing Date:
27 September 2000 (27.09.2000)

(25) Filing Language: English

(26) Publication Language: English

(30) Priority Data:
09/406,128 27 September 1999 (27.09.1999) US

(71) Applicant: **3COM CORPORATION** [US/US]; 3800 Golf Road, Rolling Meadows, IL 60008 (US).

(72) Inventors: **SCHUSTER, Guido, M.**; Apartment 408, 1433 Perry Street, Des Plaines, IL 60016 (US). **SIDHU, Sagan, S.**; 403 River Grove Lane, Vernon Hills, IL 60061 (US). **SIDHU, Ikhlaq, S.**; 403 River Grove Lane, Vernon Hills, IL 60061 (US). **BELKIND, Ronnen**; 1960 Lincoln Park West #2503, Chicago, IL 60614 (US).

(74) Agent: **THYMIAN, Marcus, J.**; McDonnell Boehnen Hulbert & Berghoff, 300 South Wacker Drive, 32nd Floor, Chicago, IL 60606 (US).

(81) Designated State *(national)*: CA.

(84) Designated States *(regional)*: European patent (AT, BE, CH, CY, DE, DK, ES, FI, FR, GB, GR, IE, IT, LU, MC, NL, PT, SE).

Published:
— *With international search report.*
— *Before the expiration of the time limit for amending the claims and to be republished in the event of receipt of amendments.*

For two-letter codes and other abbreviations, refer to the "Guidance Notes on Codes and Abbreviations" appearing at the beginning of each regular issue of the PCT Gazette.

(54) Title: SYSTEM AND METHOD FOR ESTABLISHING A CONFERENCE CALL ON A DATA NETWORK TELEPHONY SYSTEM USING A PORTABLE INFORMATION DEVICE

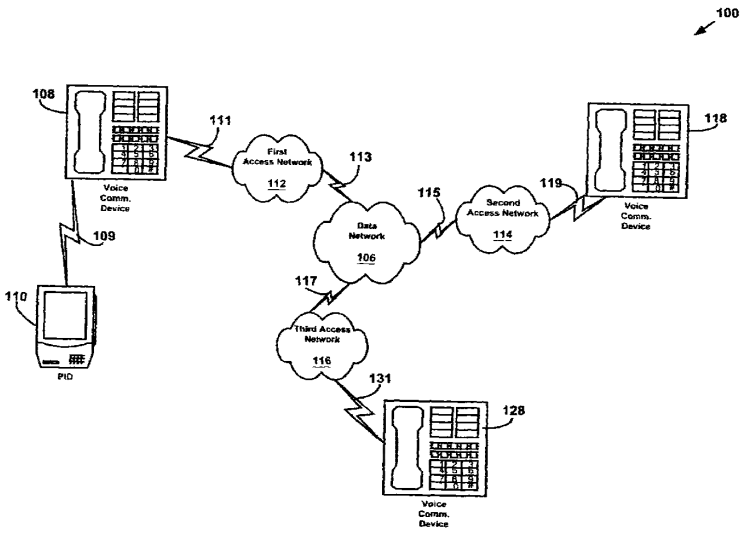

(57) Abstract: A system and method for using a portable information device, such as a personal digital assistant, to establish a conference call on a telephony network. In one embodiment, a user of the portable information device may select communication partners from an address book application located in the portable information device. Communication information related to the communication partners is transmitted across a link from the portable information device to a voice communication device, such as a data network telephone. The data network telephone may then set up the conference call.

WO 01/24498 A1

SYSTEM AND METHOD FOR ESTABLISHING A CONFERENCE CALL ON A DATA NETWORK TELEPHONY SYSTEM USING A PORTABLE INFORMATION DEVICE

BACKGROUND OF THE INVENTION

A. Field of the Invention

The present invention is related to a method and system for providing communication services over a network. In particular, the present invention relates to a system and method for establishing a conference call on a telephony network.

B. Description of the Related Art

For many years, telephone service providers on the Public Switched Telephone Network (PSTN) provided their customers nothing more than a telephone line to use to communicate with other subscribers. Over time, telephone service providers have enhanced their service by providing Custom Local Area Signaling Service (CLASS) features to their customers. Similar communication services are provided by a Private Branch Exchange (PBX), which is typically implemented in a nonresidential setting.

The CLASS features permit customer subscribers of the features to tailor their telephone service according to individual needs. Some of the more popular CLASS features are:

- *Call blocking:* The customer may specify one or more numbers from which he or she does not want to receive calls. A blocked caller will hear a rejection message, while the callee will not receive any indication of the call.
- *Call return:* Returns a call to the most recent caller. If the most recent caller is busy, the returned call may be queued until it can be completed.
- *Call trace:* Allows a customer to trigger a trace of the number of the most recent caller.
- *Caller ID:* The caller's number is automatically displayed during the silence period after the first ring. This feature requires the customer's line to be equipped with a device to read and display the out-of-band signal containing the number.
- *Caller ID blocking:* Allows a caller to block the display of their number in a callee's caller ID device.

• *Priority ringing:* Allows a customer to specify a list of numbers for which, when the customer is called by one of the numbers, the customer will hear a distinctive ring.

• *Call forwarding:* A customer may cause incoming calls to be automatically forwarded to another number for a period of time.

A customer subscriber to a CLASS feature may typically activate and/or de-activate a CLASS feature using "*" directives (e.g., *69 to automatically return a call to the most recent caller). CLASS features may also be implemented with the use of out-of-band data. CLASS feature data is typically transmitted between local Class-5 switches using the Signaling System #7 (SS7).

Local Exchange Carriers (LECs) and other similar organizations maintain CLASS offices that typically contain a database entry for each customer. The database allows specification of the CLASS features a customer has subscribed to, as well as information, such as lists of phone numbers, associated with those features. In some cases, customers may edit these lists on-line via a touch-tone interface. A list of all phone numbers that have originated or terminated a call with each customer is often included in the CLASS office database. For each customer, usually only the most recent number on this list is stored by the local Class-5 switch.

A Private Branch Exchange (PBX), is a stored program switch similar to a Class-5 switch. It is usually used within a medium-to-large-sized business for employee telephony service. Since a PBX is typically operated by a single private organization, there exists a wide variety of PBX services and features. Custom configurations are common, such as integration with intercom and voice mail systems. PBX's typically support their own versions of the CLASS features, as well as other features in addition to those of CLASS. Most PBX features are designed to facilitate business and group communications.

A summary of typical PBX features includes:

• *Call transfer:* An established call may be transferred from one number to another number on the same PBX.

• *Call forwarding:* In addition to CLASS call forwarding, a PBX number can be programmed to automatically transfer a call to another number when the first number does not answer or is busy.

Bright House Networks - Ex. 1108, Page 478

- *Camp-on queuing:* Similar to PSTN call return, a call to a busy number can be queued until the callee can accept it. The caller can hang up their phone and the PBX will ring them when the callee answers.
- *Conference calling:* Two or more parties can be connected to one another by dialing into a conference bridge number.
- *Call parking:* An established call at one number can be put on hold and then reestablished from another number. This is useful when call transfer is not warranted.
- *Executive override:* A privileged individual can break into an established call. After a warning tone to the two participants, the call becomes a three-way call.

While the CLASS and PBX features have enhanced the offerings of service providers that use the PSTN, the features are nevertheless limited in their flexibility and scope. The effect to the user is that the features become clumsy and difficult to use. For example, in order to use the Call Forwarding function, the user must perform the steps at the user's own phone prior to moving to the location of the telephone to which calls will be forwarded. A more desirable approach, from the standpoint of usefulness to the user, would be to perform the steps at the telephone to which calls will be forwarded.

Much of the lack of flexibility of the PSTN features is due to the lack of flexibility in the PSTN system itself. One problem with the PSTN is that the terminal devices (*e.g.* telephones) lack intelligence and operate as "dumb" terminals on a network having the intelligence in central offices. Most PSTN telephones are limited in functional capability to converting the analog signals they receive to sound and converting the sound from the handset to analog signals.

Some PSTN telephones have a display device and a display function to display specific information communicated from intelligent agents in the PSTN network using the PSTN signaling architecture. For example, some PSTN telephones have a display function to enable the Caller ID feature. Even such PSTN telephones are limited however by the closed PSTN signaling architecture, which prohibits access by the PSTN telephones to the network signaling protocols. The display functions are effectively limited to displaying text, again, as a "dumb" terminal.

The Internet presents a possible solution for distributing intelligence to telephony terminal devices. In Internet telephony, digitized voice is treated as data and transmitted across a digital data network between a telephone calls' participants. One form of Internet telephony uses a telephony gateway/terminal where IP telephony

Bright House Networks - Ex. 1108, Page 479

calls are terminated on the network. PSTN telephones are connected by a subscriber line to the gateway/terminal at the local exchange, or at the nearest central office. This form of Internet telephony provides substantial cost savings for users. Because the PSTN portion used in Internet telephony calls is limited to the local lines on each end of the call, long distance calls may be made for essentially the cost of a local call. Notwithstanding the costs savings provided by this form of Internet telephony, it is no more flexible than the PSTN with respect to providing enhancements and features to the basic telephone service.

In another form of Internet telephony, telephones are connected to access networks that access the Internet using a router. The telephones in this form of Internet telephony may be substantially more intelligent than typical PSTN telephones. For example, such a telephone may include substantially the computer resources of a typical personal computer.

Data network telephones and the data network (*e.g.* Internet) system in which they operate, however, lack a substantial infrastructure and service providers for providing telephone service.

It would be desirable to incorporate CLASS and PBX features into a data network telephony system that uses a data network such as the Internet.

It would be desirable to provide new features and enhancements to telephony service that accommodates and conforms to users' needs.

It would also be desirable to provide features and capabilities to telephone service that create new opportunities for users and for service providers.

The present invention addresses the above needs by providing a system in a data network telephony system, such as for example, the Internet, that enables a PID (Portable Information Device) user to establish a conference call on a telephony network.

Bright House Networks - Ex. 1108, Page 480

BRIEF DESCRIPTION OF THE DRAWINGS

Presently preferred embodiments of the invention are described below in conjunction with the appended drawing figures, wherein like reference numerals refer to like elements in the various figures, and wherein:

FIG. 1 is block diagram of a network telephony system according to one embodiment of the present invention;

FIG. 2 is a block diagram showing a system for establishing a conference call on a telephony network according to an exemplary embodiment of the present invention;

FIG. 3 is a block diagram of a data network telephone according to an exemplary embodiment of the present invention;

FIG. 4 is a block diagram of a portable information device (PID) according to an exemplary embodiment of the present invention;

FIG. 5 is a stack layer diagram showing the layers of an IrDA stack;

FIG. 6 is a block and stack layer diagram illustrating the protocol stacks in an exemplary embodiment of a PID linked to a data network telephone;

FIG. 7 is block and stack layer diagram illustrating an embodiment of the present invention in which a SIP call may be established;

FIG. 8A is a block and message flow diagram showing a system for establishing a conference call on a telephony network, according to a first embodiment of the present invention;

FIG. 8B is a message flow diagram showing an exemplary flow of messages in a system for establishing a conference call on a telephony network, according to a first embodiment of the present invention;

FIG. 9A is a block and message flow diagram showing a system for establishing a conference call on a telephony network, according to a second embodiment of the present invention;

FIG. 9B is a message flow diagram showing an exemplary flow of messages in a system for establishing a conference call on a telephony network, according to a second embodiment of the present invention;

FIG. 10A is a block and message flow diagram showing a system for establishing a conference call on a telephony network, according to a third embodiment of the present invention;

Bright House Networks - Ex. 1108, Page 481

FIG. 10B is a message flow diagram showing an exemplary flow of messages in a system for establishing a conference call on a telephony network, according to a third embodiment of the present invention;

FIG. 11 is a pictorial diagram showing an exemplary display screen of a PID displaying entries from an address book application according to one embodiment of the present invention; and

FIG. 12 is a pictorial diagram showing an exemplary display screen of a PID displaying a conference call attempt according to one embodiment of the present invention.

Bright House Networks - Ex. 1108, Page 482

DETAILED DESCRIPTION OF THE PREFERRED EMBODIMENT

The following references to patent applications filed concurrently herewith are incorporated by reference:

* "System and Method for Controlling Telephone Service Using a Wireless Personal Information Device" to Schuster, et al., Serial No. 09/406,321
* "System and Method for Advertising Using Data Network Telephone Connections" to Schuster, et al., Serial No. 09/406,320
* "System and Method for Providing User-Configured Telephone Service in a Data Network Telephony System" to Sidhu, et al., Serial No. 09/405,283
* "System and Method for Accessing a Network Server Using a Portable Information Device Through a Network Based Telecommunication System" to Schuster, et al., Serial No. 09/406,322
* "System and Method for Interconnecting Portable Information Devices Through a Network Based Telecommunication System" to Schuster, et al., Serial No. 09/406,152
* "System and Method for Enabling Encryption on a Telephony Network" to Schuster, et al., Serial No. 09/405,981
* "System and Method for Associating Notes with a Portable Information Device on a Network Telephony Call" to Schuster, et al., Serial No. 09/406,151
* "System and Method for Providing Shared Workspace Services Over a Telephony Network" to Schuster, et al., Serial No. 09/406,298
* "System and Method for Providing Service Provider Configurations for Telephones in a Data Network Telephony System" to Schuster, et al., Serial No. 09/406,066

The following additional references are also incorporated by reference herein:

* "Multiple ISP Support for Data Over Cable Networks" to Ali Akgun, et al., Serial No. 09/321,941
* "Method and System for Provisioning Network Addresses in a Data-Over-Cable System" to Ali Akgun, et al., Serial No. 09/218,793.
* "Network Access Methods, Including Direct Wireless to Internet Access" to Yingchun Xu, et al., Serial No. 08/887,313

Bright House Networks - Ex. 1108, Page 483

A. PID-Enabled Data Network Telephony System

FIG. 1 is a block diagram showing an exemplary embodiment of a system 100 for establishing a conference call on a telephony network according to the present invention. The system includes a data network 106. A first voice communication device 108 linked to a first access network 112 via connection 111 may communicate over the data network 106 by connecting via the first access network 112. A second voice communication device 118 is linked to a second access network 114 through connection 119 and may communicate over the data network 106 by connecting via the second access network 114. A third voice communication device 128 is linked to a third access network 116 through connection 131 and may communicate over the data network 106 by connecting via the third access network 116.

The data network 106 in the system 100 typically includes one or more Local Area Networks (LANs) connected to one another or to a Wide-Area Network (WAN), such as an Internet Protocol (IP) network, to provide wide-scale data connectivity. The data network 106 may use Voice-Over-Packet (VOP) schemes in which voice signals are carried in data packets. The network 106 may also include a connection to the Public Switched Telephone Network (PSTN) to allow for voice connections using traditional circuit switching techniques. In one embodiment, the data network 106 may include one or more LANs such as Ethernet LANs and support data transport protocols for performing Voice-over-Internet-Protocol (VoIP) techniques on the Internet. For further details regarding VoIP, see the information available through the Internet Engineering Task Force (IETF) at www.ietf.org. In addition, an Internet Telephony gateway may be included within the system 100 to allow for voice connections to users connected by subscriber lines at a PSTN Central Office. Other data besides voice may also be communicated over the data network 106.

The voice communication devices 108, 118, and 128 typically include a voice input, a voice output, and a voice processing system (described further below with reference to FIG. 3). The voice processing system converts voice sound to digital data signals that are communicated on a voice connection over the data network. The voice processing system also converts digital data signals received from the voice connection to voice sound. The voice communication devices 108, 118, and 128 typically include a central processing unit and memory to store and process computer programs. Additionally, each voice communication device typically includes a

Bright House Networks - Ex. 1108, Page 484

unique network address, such as an IP address, in memory to uniquely identify it to the data network 106 and to permit data packets to be routed to the device.

A PID 110 linked to the first voice communication device 108 via link 109 may communicate over the data network 106 by connecting via the first access network 112. The PID 110 includes user attributes stored in a user information data base. The user attributes may contain such information as a user identifier, schedule information, information about contacts, and other information that is associated with a user of the PID 110. The PID 110 includes a user interface allowing a user to easily enter and retrieve data. In a preferred embodiment, the user interface includes a pressure-sensitive display that allows a user to enter input with a stylus or other device. An example of a PID with such an interace is a PDA (Personal Digital Assistant), such as one of the Palm™ series of PDAs offered by 3Com® Corporation. The PID 110 may include other functionality, such as wireless phone or two-way radio functionality.

Link 109 is a point-to-point link, and may be entirely or partially wireless, or may be a hard-wired connection. Preferably, the link 109 is a wireless link, such as an infrared link specified by the Infrared Data Association (IrDA) (see www.irda.org for further information) or a radio frequency (RF) link such as the Bluetooth system (see www.bluetooth.com for further information). However, the point-to-point link can also be a hardwired connection, such as an RS-232 serial port connection.

In one embodiment, the voice communication device 108 includes a handset with a receiver and transmitter similar or identical to handsets of traditional circuit-switched telephones. A console on which the handset sits may include the voice processing system, a display 116, and a keypad 118, for example.

In a preferred embodiment, a portion of the voice communication device 108 utilizes an NBX 100™ communication system phone offered by 3Com® Corporation. In alternative embodiments, the voice communication device 108 may include any device having voice communications capabilities. For example, a personal computer having a microphone input and speaker output may also be used to implement the voice communication device 108. Other configurations are also intended to be within the scope of the present invention.

The details relating to operation of the voice communication devices 108, 118, and 128 depend on the nature of the data network 106 and the nature of the access networks 112, 114, and 116 connecting the voice communication devices 108, 118,

Bright House Networks - Ex. 1108, Page 485

and 128 to each other and/or to other network entities. The access networks 112, 114, and 116 typically include any high bandwidth network adapted for data communications, i.e. a network having greater than 64,000 bits-per-second (bps) bandwidth. The access networks 112, 114, and 116 may link to the voice communication devices 108, 118, and 128 using an Ethernet LAN, a token ring LAN, a coaxial cable link (*e.g.* CATV adapted for digital communication), a digital subscriber line (DSL), twisted pair cable, fiberoptic cable, an integrated services digital network (ISDN) link, and wireless links, for example. In embodiments that may not require bandwidth greater than 64,000 bps, the access networks 112, 114, and 116 may also include the PSTN and link the voice communications devices 108, 118, and 128 by an analog modem. Further details regarding specific implementations are described below, with reference to FIGs. 2 through 13.

B. System for Establishing a Conference Call on a Data Network Telephony Syste2

One advantage of the PDA-Enabled Data Network Telephony System 100 in FIG. 1 is that it may be used to establish conference calls between users on the Data Network Telephony System. In one embodiment, the PID 110 allows a user to select the communications partners to be included in the conference call. The PID 110 then transfers information about the communications partners to first voice communication device 108 through the link 109. The first voice communication device 108 then sets up the conference call with voice communication devices associated with the communication partners selected by the user associated with the first voice communication device 108.

Once a conference call is set up, data can be transferred between the conferenced voice communication devices. PIDs, such as the PID 110, associated with the parties to the conference call may also be used to communicate information. For example, the PID 110 linked to the first voice communication device 108 may be able to accept and display PID data entered by a user through a user interface on the PID 110. The PID data can then be communicated across the link 109 to the voice communication device 108 for transport across the first access network 112, the data network 106, and the second and third access networks 114 and 116 to the second and third voice communication devices 118 and 128. The PID 110 can also receive PID data and other data across the link 109 for display on the PID 110. A voice-over-data

Bright House Networks - Ex. 1108, Page 486

channel for communicating voice-over-data can concurrently exist with this communication of PID data over a PID data channel. Preferably, all parties to the conference call have PIDs linked to the voice communication devices associated with the parties. In this way, a user of the PID 110 can communicate PID data to other parties to the conference call while voice signals are communicated between the voice communication devices.

1. Local Area Networks as an Exemplary Access Networks

FIG. 2 is a block diagram showing one example of the system 100 of FIG. 1 for establishing a conference call on a telephony network according to the present invention. The system 200 in FIG. 2 includes a local area network 212 connected to a data network 206 by a first router 213. A second local area network 214 is connected to the data network 206 by a second router 215. A cable network 216 is connected to the data network 206 by a third router 217. Those of ordinary skill in the art will appreciate that while FIG. 2 illustrates the access networks as two local area networks 212 and 214, and a cable network 216, any other type of network may be used. For example, the local area networks and the cable network may be replaced by ISDN, DSL, or any other high-speed data link.

The local area networks 212 and 214 provide data connectivity to their respective network elements. For example, the first LAN 212 provides data connectivity to at least a first data network telephone 208 and a first network telephony connection server 250. The second LAN 214 provides data connectivity to at least a second data network telephone 218 and a second network telephony connection server 238.The local area networks 212 and 214 in FIG. 2 are, for example, Ethernet LANs operating according to the IEEE 802.3 specification, which is incorporated by reference herein; however, other types of local area networks may also be used. The first local area network 212 uses the router 213 to provide the first data network telephone 208 and the first network telephony connection server 250 with access to the data network 206. For example, the router 213 may perform routing functions using protocol stacks that include the Internet Protocol and other protocols for communicating on the Internet. Similarly, the second local area network 214 uses the router 215 to provide the second data network telephone 218 and the second network telephony connection server 238 with access to the data network 206.

Bright House Networks - Ex. 1108, Page 487

The first, second, and third network telephony connection servers 250, 238, and 237 provide telephony registration, location and session initiation services for voice connections in which at least one of their members are a party. For example, a user of the first data network telephone 208 may register for telephony service with an administrator of the first network telephony connection server 250 and receive a user identifier and a telephone identifier. The user identifier and telephone identifier may be sequences of unique alphanumeric elements that callers use to direct voice connections to the user. The network telephony connection servers 250, 238 and 237 register users by storing user records in registration databases (not shown in FIG. 2) associated with each of the network telephony connection servers 250, 238 and 237, in response to registration requests.

The call setup process and the user and telephone identifiers preferably conform to requirements defined in a call-management protocol. The call-management protocol is used to permit a caller anywhere on the data network to connect to the user identified by the user identifier in a data network telephone call. A data network telephone call includes a call setup process and a voice exchange process. The call setup process includes steps and message exchanges that a caller and callee perform to establish the telephone call. The actual exchange of voice signals is performed by a data communications channel. The data communications channel incorporates other data transport and data formatting protocols, and preferably includes well-known data communications channels typically established over the Internet.

The call management protocol used in FIG. 2 is the Session Initiation Protocol (SIP), which is described in M. Handley et al., "SIP: Session Initiation Protocol," IETF RFC 2543, Mar. 1999, incorporated by reference herein; however, any other such protocol may be used. Other protocols include H.323, MEGACO, the Media Gateway Control Protocol (MGCP), etc.

The network telephony connection servers 250, 238, and 237 may be used to provide telephony service for mobile users. For example, a user may be registered to use the first network telephone 208 (which is identified by its telephone identifier), but the user may move to a location near a second network telephone (not shown) on the first local area network 212. The user may re-register as the user of the second telephone. Calls that identify the user by the user's user identifier may then reach the user at the second network telephone.

Bright House Networks - Ex. 1108, Page 488

2. Cable Network as an Exemplary Access Network

The system 200 in FIG. 2 also shows a cable network 216 connected to the data network 206 by a router 217. The cable network 216 provides data network access to its network elements, which in FIG. 2 include a third data network telephone 228 and a third network telephony connection server 237. A user of the third data network telephone 218 connected to the cable network 216 may communicate by telephone over the data network 206 with the users of the first and second data network telephones 208 and 218 respectively connected to the first and second local area networks 212 and 214.

The cable network 216 includes any digital cable television system that provides data connectivity. In the cable network 216, data is communicated by radio frequency in a high-frequency coaxial cable. The cable network 216 may include a head-end, or a central termination system that permits management of the cable connections to the users.

3. Providing Telephony Services

The third network telephony connection server 237 is preferably a SIP-based server that performs call initiation, maintenance, and teardown for the third data network telephone 228 connected to the cable network 216. The third network telephony connection server 240 may be similar or identical to the first and second network telephony connection servers 250 and 238 respectively connected to the first and second local area networks 212 and 214.

The system 200 shown in FIG. 2 includes a data network telephony system that permits the first and second data network telephones 208 and 218 respectively connected to the local area networks 212 and 214 to communicate with the third data network telephone 228 connected to the cable network 216. The system shown in FIG. 2 uses SIP in order to establish, maintain, and teardown telephone calls between users.

There are two major architectural elements to SIP: the user agent (UA) and the network server. The UA resides at the SIP end stations, (e.g. the data network telephones), and contains two parts: a user agent client (UAC), which is responsible for issuing SIP requests, and a user agent server (UAS), which responds to such requests. There are three different network server types: a redirect server, a proxy

Bright House Networks - Ex. 1108, Page 489

server, and a registrar. The various network server types may be combined into a single server, such as the network telephony connection servers 250, 240, and 238. Not all server types are required to implement the embodiments of the present invention. The communication services to be provided will determine which servers are present in the communication system. Preferred embodiments of the present invention may be carried out using proxy servers.

One example of a SIP operation involves a SIP UAC issuing a request, a SIP proxy server acting as end-user location discovery agent, and a SIP UAS accepting the call. A successful SIP invitation consists of two requests: INVITE followed by ACK. The INVITE message contains a user identifier to identify the callee, a caller user identifier to identify the caller, and a session description that informs the called party what type of media the caller can accept and where it wishes the media data to be sent. User identifiers in SIP requests are known as SIP addresses. SIP addresses are referred to as SIP Uniform Resource Locators (SIP-URLs), which are of the form *sip:user@host.domain*. Other addressing conventions may also be used.

Redirect servers process an INVITE message by sending back the SIP-URL where the callee is reachable. Proxy servers perform application layer routing of the SIP requests and responses. A proxy server can either be stateful or stateless. A stateful proxy holds information about the call during the entire time the call is up, while a stateless proxy processes a message without saving information contained in the message. Furthermore, proxies can either be forking or non-forking. A forking proxy can, for example, ring several phones at once until somebody takes the call. Registrar servers are used to record the SIP address (called a SIP URL) and the associated IP address. The most common use of a registrar server is for the UAC to notify the registrar where a particular SIP URL can be reached for a specified amount of time. When an INVITE request arrives for the SIP URL used in a REGISTER message, the proxy or redirect server forwards the request correctly.

At the first local area network 212, the central registrar/proxy server, such as the first network telephony server 250, is the primary destination of all SIP messages trying to establish a connection with users on the first local area network 212. Preferably, the first network telephony server 250 is also the only destination advertised to the SIP clients outside the first local area network 212 on behalf of all the SIP clients residing on the first local area network 212. The network telephony server 250 relays all SIP INVITE messages to the appropriate final destination (or

Bright House Networks - Ex. 1108, Page 490

another SIP proxy), based on a database lookup using a first SIP database (not shown) associated with the first network telephony server 250. This allows all mobile clients to register with their current locations.

Similarly, the second network telephony server 238 is the primary destination of all SIP messages trying to establish a connection with the data network telephone 218 connected to the second local area network 214. Preferably, the second network telephony server 238 is also the only destination advertised to the SIP clients outside the second local area network 214 on behalf of all the SIP clients (*e.g.* data network telephones) residing on the second local area network 214. The second network telephony server 238 relays all SIP INVITE messages to the appropriate final destination (or another SIP proxy), based on a database lookup using a second SIP database. The third network telephony server 237 behaves similarly to the first and second network telephony servers 250 and 238.

The data network telephones 208, 218, and 228 in the system 200 preferably have pre-programmed device identifiers (*e.g.* phone numbers), represented as SIP-URL's that are of the form *sip: user@domain.* An example is *sip: 8475551212@3Com.com.* After power-up, each of the data network telephones 208, 218, and 228 sends a SIP REGISTER message to the default registrar, such as the network telephony servers 250, 238, and 237. When a call arrives at one of the network telephony servers 250, 238, or 237 for any of the registered SIP URLs, the server will forward the call to the appropriate destination. If a data network telephone is moved to a new location, all calls to the associated SIP URL will still be properly routed to that device. In other words, the system in FIG. 2 provides device mobility in the sense that calls will "follow" the data network telephone according to its SIP URL. This is especially useful if the data network telephone 208, 218, or 228 is running the DHCP (Dynamic Host Configuration Protocol) so that when the location is changed, the IP address is also automatically changed.

An advantage of the system in FIG. 2 is that once the call is established between data network telephones, the data network 206 provides data connectivity for a plurality of data communications channels. For example, the data network telephones 208, 218, and 228 can communicate voice signals as voice-over-data packets on a voice-over-data channel. The data network telephones 208, 218, and 228 may also be able to communicate PID data as PID data packets on a PID data channel. Other data types may also be communicated. For example, the PID data may be

Bright House Networks - Ex. 1108, Page 491

communicated to and from the PID 210 across link 209 to the data network telephone 208, where the PID data may be assembled into packets and disassembled from packets as part of the process for communicating the PID data packets across the data network 206 and any access networks, such as the first Ethernet LAN 212, the second Ethernet LAN 214, and the cable network 214. For example, the PID data may be communicated to and from at least one other PID (not shown) through a network device (such as a data network telephone) located in the system 200.

4. The Data Network Telephones

The data network telephones 208, 218, and 228 are preferably telephones that include an Ethernet communications interface for connection to an Ethernet port. The Ethernet phones in FIG. 2 support the Internet Protocol (IP), using an IP address that is either statically configured or obtained by access to a Dynamic Host Configuration Protocol (DHCP) server.

FIG. 3 is a block diagram showing the first data network telephone 208 connected to the local area network 212 in FIG. 2. The data network telephone 208 in FIG. 3 is connected to the network 212 by a network interface 270. The network interface 270 may, for example, be a network interface card, and may be in the form of an integrated circuit. A bus 248 may be used to connect the network interface 270 with a processor 240 and a memory 242. Also connected to the processor are user interface circuitry 260 and three alternative interfaces to a Personal Information Device (PID).

A first alternative interface 248 includes an RS-232 serial connection and associated coupling hardware and mechanisms. The first alternative interface 248 may, for example, be a docking cradle for a PID, such as a PDA (Personal Digital Assistant), in which information may be transferred between the PID and the first data network telephone 208. The second alternative interface comprises a first connection 254, such as an RS-232 connection, along with infrared circuitry 250 for converting signals into infrared output and for accepting infrared input. An infrared interface 252 may also be included within the second alternative interface. The third alternative interface comprises a first connection 256, such as an RS-232 connection, along with radio-frequency circuitry 258 for converting signals into radio frequency output and for accepting radio frequency input. A radio frequency interface 259 may also be included as part of the third alternative interface.

The three alternative interfaces described above are merely examples, and additional means for implementing the interface between the data network telephone 208 and the PID may also be used. Although three interfaces are shown in FIG. 3, there may be only one such interface in the data network telephone 208. More than one interface may be included to improve flexibility and to provide redundancy in case of failure of an interface.

The user interface circuitry 260 includes hardware and software components that access the functions of the handset, display, and keypad to provide user input and output resources for functions in the processor 240. The user interface circuitry may include a display interface 262, a keypad interface 264, an audio output interface 265, and an audio input interface 267.

The audio input interface 267 may receive voice signals from a microphone or other audio input device and convert the signals to digital information. The conversion preferably conforms to the G.711 *ITU Standard*. Further processing of the digital signal may be performed in the audio input interface 267, such as to provide compression (*e.g.* using G.723.1 standard) or to provide noise reduction, although such processing may also be performed in the processor 240. Alternatively, the audio input interface 267 may communicate an analog voice signal to the processor 240 for conversion to digital information.

The audio output interface 265 receives digital information representing voice from the processor 240 and converts the information to sound. In one embodiment, the audio output interface 265 receives information in the form of G.711 although other processing such as decompression may be performed in the audio output interface 265. Alternatively, the processor 240 may convert digital information to analog voice signals and communicate the analog voice signals to the audio output interface 265.

The keypad interface 264 and the display interface 262 include well-known device interfaces and respective signal processing techniques. The user interface circuitry 260 may support other hardware and software interfaces. For example, a videophone implementation might also include a camera and monitor. The data network telephones of the present invention are not limited to telephones or videophones -- additional user interface types, for example, such as the ones needed for computer games, are also contemplated as being within the scope of the present invention.

Bright House Networks - Ex. 1108, Page 493

The processor 240 may consist of one or more smaller processing units, including, for example, a programmable digital signal processing engine. In the preferred embodiment, the processor is implemented as a single ASIC (Application Specific Integrated Circuit) to improve speed and to economize space. The processor 240 also may include an operating system, and application and communications software, firmware, or hardware, to implement the functions of the first data network telephone 208. For example, the processor may include a conferencing application 245 to assist in gathering communication partner data from a PID and to establish the conference call by connecting the conference call parties. The operating system may be any suitable commercially available embedded or disk-based operating system, or any proprietary operating system.

The processor 240 includes a media engine 241 and a signaling stack 243 to perform the primary communications and application functions of the data network telephone 208. The purpose of the signaling stack in an exemplary data network telephone 208 is to set up, manage, and tear down a call. During the setup phase, a user may use the keypad to enter a user identifier to call. The signaling stack 243 receives the user entry and formats a request message to send to the user identified by the user identifier to initiate a telephone call. When the request message is sent, the location of the user identified by the user identifier is discovered, communication parameters, such as the supported voice CODEC types are exchanged, and a voice over data channel is established. During the management phase, for example, other parties are invited to the call if needed. During the teardown phase, the call is terminated.

The signaling protocol used in the exemplary data network telephone 208 in FIG. 3 is the SIP protocol. In particular, the signaling stack implements a User Agent Client 244 and a User Agent Server 242, in accordance with the SIP protocol. Alternative signaling protocols, such as the ITU-T H.323 protocol and others, may also be used to implement the present invention.

Once the call is set up, the media engine 241 manages the communication over a data communications channel using a network transport protocol and the network interface 270. The media engine 241 sends and receives data packets having a data payload for carrying data and an indication of the type of data being transported. The media engine 241 in the data network telephone 208 may sample the voice signals from the audio input 267 (or receive voice samples from the audio input 267), encode

Bright House Networks - Ex. 1108, Page 494

the samples, and build data packets on the sending side. On the receiver side, in addition to performing the reverse operations, the media engine also typically manages a receiver buffer to compensate for network jitter.

The media engine 241 includes hardware and software components for enabling conferencing 245, performing registration functions 247, voice-over-data functions 249, display data function 251, and keypad output functions 253. The media engine 241 processes data that is received from the first local area network 212, and data that is to be sent over the first local area network 212.

For data that is received from the first local area network 212, the media engine 241 may determine from the type of data in the packet whether packets contain sampled voice signals or data for performing other functions. Packets containing sampled voice signals are processed by voice over data function 249. The voice over data function 249 preferably conforms to a protocol for formatting voice signals as digital data streams. While any suitable protocol may be used, the media (voice signal) is preferably transported via the Real Time Protocol (RTP), which itself is carried inside of User Datagram Protocol (UDP). RTP is described in H. Schulzrinne et al., "RTP: A Transport Protocol for Real-Time Applications," IETF RFC 1889, Jan. 1996, which is incorporated herein by reference. UDP is described in J. Postel, "User Datagram Protocol," IETF RFC 768, Aug. 1980, and IP is described in J. Postel, ed., "Internet Protocol," IETF RFC 791, Sept. 1981, both of which are incorporated by reference herein.

Packets containing data for use in registering the data network telephone 208 with a network telephony server are processed by the registration function 247. By registering the data network telephone 208, a user may establish with the network telephony service provider that calls addressed to the user's user identifier may be connected to the data network telephone 208. Registration may occur when the data network telephone 208 sends a request to register to a service provider host. The service provider host may respond by setting the user's user identifier to correspond to the telephone identifier of the data network telephone 208, and by acknowledging the request with a status message to the data network telephone 208. In one embodiment, a request to register the data network telephone 208 to a default user is automatically sent during power-up of the data network telephone 208.

Other features may be added to the registration functions 247, or implemented as extensions to the registration functions 247. For example, the data network

telephone 208 may be provisioned to provide selected network telephony services by establishing a data connection with a service provider, requesting the selected services, and receiving data that ensures that the services have been successfully provisioned. Such services may include, for example, caller identification, call forwarding, voice mail and any other service offered by the network telephony service provider to enhance the capabilities of the data network telephone 208. One advantage of such provisioning functions is that services may be ordered for temporary use in a manner that is convenient to the user.

Packets containing data for display on the display device are processed by the display data function 251. The display data function 251 may be used for displaying, for example, the name(s) and user identifier(s) of the other party(-ies) to the call, the status of the telephone call, billing information, and other information

For data that is to be sent over the data network 212, the media engine 241 formats the data as data packets in accordance with a selected protocol. The selected protocol is preferably the protocol that is supported by the data network telephone that will receive the data for the particular type of data being transported.

The voice-over-data function 249 formats voice samples according to the protocol used by the receiving data network telephone. In one preferred embodiment, the voice over data function 249 formats voice samples as RTP packets. The registration function 247 and the keypad output function 253 may control the transport of data that does not represent voice signals.

The data network telephones 218 and 228 are preferably similar or identical to the data network telephone 208.

5. The Portable Information Device (PID)

FIG. 4 is a block diagram showing the PID 210 in communication with the data network telephone 208 having a connection to the first LAN 212. The PID 210 is linked to the data network telephone 208 by a point-to-point interface 545. A bus 580 may be used to connect the point-to-point interface 545 with a processor 540, a memory 542, data storage 543, and user interface circuitry 544.

The point-to-point interface 545 shown in FIG. 4 illustrates three alternative interfaces to a data network telephone.

A first alternative interface 546 includes a RS-232 serial connection and associated coupling hardware mechanisms. The first alternative interface 546 may,

Bright House Networks - Ex. 1108, Page 496

for example, be a docking cradle for a PID, in which information can be transferred between the PID 210 and the first data network telephone 208. The second alternative interface comprises a first connection 548, such as a RS-232 serial connection, along with infrared circuitry 250 for converting signals into infrared output and for accepting infrared input. An infrared interface 552 may also be included within the second alternative interface. The third alternative interface comprises a first connection 554, such as an RS-232 connection, along with radio-frequency circuitry 556 for converting signals into radio frequency output and for accepting radio frequency input. A radio frequency interface 558 may also be included as part of the third alternative interface.

The three alternative interfaces described above are merely examples, and additional means for implementing the interface between the PID 210 and the data network telephone 208 may also be used. Although three interfaces are shown in FIG. 4, there may be only one such interface in the PID 210. More than one interface may be included to improve flexibility and to provide redundancy in case of failure of an interface.

The user interface circuitry 544 includes hardware and software components that provide user input and output resources for functions in the processor 540. The user interface circuitry preferably includes a display output 562, a display input 565, and an additional input/output interface 567.

The display output 562 preferably receives digital information representing graphical or other data from the processor 540 and converts the information to a graphical display, such as text and/or images.

The display input 565 may receive PID data inputs from a user of the PID 210. The PID data inputs are preferably entered by the user with a stylus on a pressure-sensitive display screen. Similarly, the display output 562 preferably displays the PID data on the display screen.

The additional input/output interface 567 allows the user to enter other types of data besides PID data into the PID 210. For example, audio data, additional PID data, or additional input may be entered through the additional input/output interface 567. Touch-sensitive screen buttons are an exemplary mechanism for a user to enter control data into the PID 210.

The processor 540 includes an operating system and application and communication software, firmware, or hardware to implement the functions of the

Bright House Networks - Ex. 1108, Page 497

PID 210. The operating system may be any suitable commercially available operating system, or any proprietary operating system. The operating system and software may be stored on data storage 543. The conference application 575 preferably allows a user to select communication partners to be invited to a conference call initiated by the user of the PID 210. The conference application also should cause user identification information for the communication partners to be transmitted from the PID 210 to the first data network telephone 208 via the link 209. Although the processor 540 is shown connected to the data storage 543 through a bus 580, other configurations may also be used. Similarly, the memory 542 may be alternatively configured, and may be embedded within the processor 540.

The PID 210 is able to send data to and receive data from the data network telephone 208 across a point-to-point link, such as the point-to-point link 209 shown in FIG. 2. A user enters PID data at the display input 565. The PID data may be processed in the user interface circuitry 544 or it may go directly to the processor 540 or the memory 542. The processor 540 may also perform processing functions, such as compression. A PID data application may be used to implement the display input, the display output, and the processing functions. For example, a drawing application may be used to accept PID data input, the display input 565 from a user drawing with a stylus on the display screen of a PDA. A drawing application could then display the drawing through the display output 562 to enable the user to see a visual representation of the drawing. If the user desires to share the drawing with a second user on the system 200, where the second user is using a second PID, the PID data from the drawing application can be transmitted through one of the point-to-point interfaces 545, allowing the data to be received by the data network telephone 208. An application in the data network telephone 208 receives the PID data across the point-to-point link, and the PID data is prepared for transmission across the data network 206, such as by the media engine 241 shown in FIG. 3. Preferably the PID data is converted to PID data packets and is communicated on a PID data channel across the first LAN 212 through the router 213 across the data network 206 and eventually to a network device at which the second PID is located.

The point-to-point link 209 may be implemented as a serial bit stream between an application in the PID 210 and an application in the first data network telephone 208. For example, the link 209 could be an infrared link that is implemented with minimal stack interpretation. However, the infrared link 209 between PID 210 and

Bright House Networks - Ex. 1108, Page 498

the first data network telephone 208 can alternatively be implemented using all or parts of a specialized protocol, such as the Infrared Data Association (IrDA) protocol stack, where data is interpreted through the stack between application-layer processes at each end of the link.

FIG. 5 is a protocol diagram illustrating the layers of the IrDA protocol stack. An IrDA stack is implemented at each of the connection endpoints of an IrDA link. The required layers of an IrDA protocol stack are the physical layer 602, the IrLAP layer 604, the IRLMP layer 606 and the IAS layer 608. The physical layer 602 specifies optical characteristics of the link, encoding of data, and framing for various speeds. The IrLAP (Link Access Protocol) layer 604 establishes the basic reliable connection between the two ends of the link. The IrLMP (Link Management Protocol) layer 606 multiplexes services and applications on the IrLAP connection. The IAS (Information Access Service) layer 608 provides a directory or "yellow pages" of services on an IrDA device.

The IrDA protocol also specifies a number of optional protocol layers, these protocol layers being TinyTP 610, IrOBEX 612, IrCOMM 614 and IrLAN 616. TinyTP (Tiny Transport Protocol) 610 adds per-channel flow control to keep traffic over the IrDA link moving smoothly. This important function is required in many cases. IrOBEX (Infrared Object Exchange protocol) 612 provides for the easy transfer of files and other data objects between the IrDA devices at each end of the link. IrCOMM 614 is a serial and parallel port emulation that enables existing applications that use serial and parallel communications to use IrDA without change. IrLAN (Infrared Local Area Network) 616 enables walk-up infrared LAN access for laptops and other devices. The use of the optional layers depends upon the particular application in the IrDA device. The IrDA protocol stack is defined by such standards documents as "IrDA Serial Infrared Physical Layer Link Specification", "IrDA 'IrCOMM': Serial and Parallel Port Emulation over IR (Wire Replacement)", "IrDA Serial Infrared Link Access Protocol (IrLAP)", "IrDA Infrared Link Management Protocol (IrLMP)", and "IrDA 'Tiny TP': A Flow-Control Mechanism for use with IrLMP", and related specifications published by the IrDA and available at http://www.irda.org/standards/specifications.asp and is incorporated by reference herein.

In one embodiment, the data network telephones 208, 218, and 228 merely provide a data tunnel for the data channel attendant to the infrared links, while the

Bright House Networks - Ex. 1108, Page 499

IrDA protocol stack is implemented at endpoint PID devices, such as PID 210. Alternatively, IrDA stacks can be implemented in the data network telephones as well. By implementing additional layers of the IrDA protocol stack, the PID applications and the base applications in the data network telephones can be simplified because the IrDA protocol layers take over certain functions. For example, the IrDA protocol stack can be implemented at each PID used in a conference call, and the IrOBEX layer 612 can be used to transfer text and graphics object files, such as drawings or electronic business cards, end-to-end between PID devices connected via data network telephones and networks.

6. Providing Telephony and Conferencing Services

FIG. 6 is a functional block diagram and protocol stack diagram illustrating an embodiment of the protocol stacks in the PID 210 and the first data network telephone 208 that support link 209. In the infrared RS-232 embodiment, the point-to-point interface circuitry 545 in the PID 210 provides the physical layer 656, such as that specified by the Infrared Data Association (IrDA), that connects via link 209 to the point-to-point interface circuitry 260 implementing a physical layer 664 in the first data network telephone 208. The data link layer 654 in PID 210 provides data link control for link 209 in transferring data to and from a PID application client 652. Similarly, the first data network telephone 208 includes a data link layer 662 and a base application server 600 that is configured to synchronize connection and other functions with the PID application 652 in PID 210.

When PID 210 is activated, either through power-up or through a user input at the user interface 650, the synchronization application client 652 in the PID 210 may send the user's SIP URL across the link 209 to the first data network telephone 208, where it is received by the synchronization application server 600. The synchronization application server 600 sends the SIP URL received from the PID 210 across connection 230 and the Ethernet LAN 212 through connection 243 to the network telephony connection server 250. The network telephony connection server 250 may store the SIP URL and the IP address of the associated data network telephone 208 in a SIP database (not shown) so that the SIP URL is listed as being resident at the IP address of the data network telephone 208. (If the network telephony connection server 250 uses a location server for registration/location tasks,

Bright House Networks - Ex. 1108, Page 500

the registration information might instead be stored with such a location server). SQL (Structured Query Language) is preferred for implementing and maintaining the database. Once the PID 210 is registered with the network telephony connection server 250, calls to the SIP URL for PID 210 (or the user of the PID 210) will be directed to the first data network telephone 208.

FIG. 7 is a functional block and protocol stack diagram illustrating an embodiment of the present invention where a SIP connection is established from the first data network phone 208 to the second data network phone 218 through network connection 230, first access network 212, data network 206, second access network 214 and network connection 219. The routers 213 and 215 and associated connections are not shown to simplify the block diagram representation. Although only two data network telephones are shown in FIG. 7, a three-party conference call would be very similar to what is shown in FIG. 7.

The diagram of FIG. 7 shows how PID data can be communicated from one PID to another PID during a conference call in one aspect of the present invention. The PID application 652 in PID 210 is configured to send PID data input through the user interface 650 through link 209 to base application 660 in the first data network phone 208. In this embodiment, base application 660 is configured to define data channels for transport to the second data network telephone 218.

Multiple data channels in SIP may be defined through the Session Description Protocol described in RFC 2327, herein incorporated by reference. Included in a SIP INVITE request for a connection are options for the requested connection that describe the number and type of media streams. Each media stream is described by a "m=" line in the INVITE request. For example, a request for a connection that includes an audio stream and a bidirectional video stream using H.261 might look like this:

```
v=0
o=alice 2890844526 2890844526 IN IP4 host.anywhere.com
c=IN IP4 host.anywhere.com
m=audio 49170 RTP/AVP 0
a=rtpmap:0 PCMU/8000
m=video 51372 RTP/AVP 31
a=rtpmap:31 H261/90000
```


Bright House Networks - Ex. 1108, Page 501

TABLE 1.

If the called device includes functionality to receive the connection as described in Table 1, then the called device will respond to the INVITE request with a 200 OK response that includes the same option values. If the called device or party is unable or unwilling to receive such a connection, then it will respond with alternative option values for the connection. See RFC 2543 for further details regarding the negotiation of connection parameters in SIP.

In FIG. 7, a first data channel for voice data and a second data channel for PID data have been negotiated by the base applications 660 in the first data network telephone 208 and the base application 674 in the second data network telephone 218. The base applications 660 and 674 transfer voice data between the AUDIO applications, such as applications including G.711 encoders, in each phone via the first data channel. The base application 660 in phone 208 is also configured to send the PID data received via link 209 from PID 210 to the base application 674 in phone 218 via the second data channel. The base application in phone 218 is configured to forward the PID data received via the second data channel to a second PID 220 via a second link 221. The PID application 688 in PID 220 then outputs the PID data received from phone 218 to the user interface 686 for output to the user of PID 220.

The PID data in FIG. 5 can take a variety of forms. For example, the PID data can be a text file containing information about the user of PID 210, such as an electronic business card. The PID data can also be drawing data generated by graphical applications in the PIDs 210 and 220 whereby a user drawing on a touchscreen of the user interface 650 in PID 210 generates corresponding PID data that is transmitted via the second data channel to PID 220a for display on the user interface 686 of PID 220a. The media description for the media stream can be defined during connection setup to establish a connection appropriate to the type of data being transferred. These examples represent just a few of the applications for this aspect of the present invention and should not be viewed as limiting the present invention.

In one embodiment, RTP data packets for two or more types of data are exchanged between the first data network telephone 208 and the second data network telephone 218a according to one of three possible methods. In the first method, one RTP data channel (or RTP stream) on UDP carries data packets in which both data

Bright House Networks - Ex. 1108, Page 502

types are present in single split packets. Each such split packet contains (1) a source port number and a destination port number in the UDP portion, and (2) a special payload sequentially including each of the data types in the RTP portion. The special payload type can be defined in the SDP described with reference to FIG. 6. Other information is also contained in each packet as well. In the second method for transmitting two or more data types, a separate RTP over UDP data channel is created for each of the different data types, and the RTP header indicates which type of data is contained in each packet. For example, voice data coded as G.711 might be assigned a payload type code of 0, while PID data is assigned a payload type code of 190. In the third method for transmitting two or more data types, a single RTP/UDP data channel (RTP/UDP stream) is created that contains data packets of two or more different types. In this method, the data types are identified in a payload type field in the RTP header of each packet, enabling an underlying application to identify which data packets are voice data packets and which data packets are PID data packets, for example.

FIG. 8A is a block and message flow diagram showing a system 300 for using a PID 210 to establish a conference call on a telephony network, according to a first embodiment of the present invention. A single internetwork 700 represents the combination of any access networks at which data network telephones 208, 218, and 228 reside, any data networks connecting any existing access networks, and any routers, bridges, or other similar devices. For purposes of illustration, it will be assumed that UserA is associated with the PID 210 and is located at (registered with) the first data network telephone 208. UserB is located at (registered with) the second data network telephone 218. UserC is located at (registered with) the third data network telephone 228.

UserA initiates a conference call to Users B and C by causing the PID 210 to transmit user identifiers (such as SIP URLs) of the desired communication partners (such as UserB and UserC) to the first data network telephone 208. For example, UserA can select the names or user identifiers of UserB and UserC in an address book application located on the PID 210. A call application on the PID 210 may then be used to transmit the user identifiers across the link 209 to the first data network telephone 208.

The first data network telephone 208 performs call-management procedures to initiate the call to the desired communication partners. If SIP is utilized as the call-

Bright House Networks - Ex. 1108, Page 503

management protocol, then the first data network telephone transmits INVITE requests to the network elements (such as data network telephones) at which the communication partners are located (or registered). If the first data network telephone does not know where the communication partners are registered, the first data network telephone will likely utilize at least one network telephony connection server (not shown in FIG. 8A) to locate the communication partners and transmit appropriate INVITE requests. When the communication partners (UserB and UserC) receive the INVITE requests at the second and third data network telephones 218 and 228, they may either accept or reject the requests. Assume that UserB and UserC both accept the INVITE requests by transmitting a 200 OK message according to SIP. After any necessary acknowledgement messages are transmitted by the first data network telephone to the second and third data network telephones 218 and 228, data channels may be created (1) between the first data network telephone 208 and the second data network telephone 218, and (2) between the first data network telephone 208 and the third data network telephone 228. Note that there need not be a data channel created between the second data network telephone 218 and the third data network telephone 228. This is because the first data network telephone 208 had data channels to all other communication partners, and is therefore able to mix all incoming data channel streams so that UserB is able to receive UserC's communications and vice-versa.

The system 300 in FIG. 8A has the advantage of being relatively simple to set up, but may not scale as well as other systems as more users are added to the conference call. This is due to the fact that mixing for all the parties is occurring at the first data network telephone 208. It is however possible for additional communication partners to be invited by data network telephones other than the first data network telephone 208, in which case some of the mixing may occur at other data network telephones as well.

FIG. 8B is a message flow diagram showing an exemplary flow of messages in a system 300 for using a PID 210 to establish a conference call on a telephony network, according to a first embodiment of the present invention. A PID 210 associated with a UserA transmits a request 402 to a first data network telephone 208 to call UserB at UserB_id and UserC at UserC_id. UserB_id and UserC_id may be SIP URLs, for example. The first data network telephone 208 may acknowledge the request to call UserB and UserC by sending an acknowledgement message 404. The first data network telephone 208 then may attempt to connect UserB by sending a first

Bright House Networks - Ex. 1108, Page 504

INVITE message 470, preferably containing UserA session information in SDP (Session Description Protocol) format, to a second data network telephone 218 associated with UserB. A network telephony access server, such as the second network telephony access server 238 may be accessed to locate the second data network telephone as being registered with UserB. Similarly, the first data network telephone 208 then may attempt to connect UserC by sending a second INVITE message 472, preferably containing UserA session information in SDP format, to a third data network telephone 228 associated with UserC. A network telephony access server, such as the third network telephony access server 237 may be accessed to locate the third data network telephone as being registered with UserC. The second and third data network telephones 218 and 228 then may respond by sending separate 200 OK messages 478 and 480 if SIP is being used as the call-management protocol. The first data network telephone 208 may acknowledge the responses 478 and 480 by transmitting ACK messages 482 and 484 to the second and third data network telephones 218 and 228.

After the call has been initiated according to the procedure described above, communications can be transmitted over data channels created by the data network telephones 208, 218, and 228. A first data channel 486 is created between the first data network telephone 208 and the second data network telephone 218. A second data channel 488 is created between the first data network telephone 208 and the third data network telephone 228. Additional data channels may also be created to communicate information between the data network telephones. For example, a third data channel may be created between the first data network telephone 208 and the second data network telephone 218 to allow PID data, such as graphical display data, to be communicated between the first and second data network telephones 208 and 218. If UserA decides to terminate the call, UserA can cause the first data network telephone 208 to transmit a first BYE message 490 to the second data network telephone 218 and a second BYE message 492 to the third data network telephone 228. The second and third data network telephones 218 and 228 may respond by sending 200 OK messages 494 and 496 to the first data network telephone 208. Variations of the messages described above can also be used, such as if a call-management protocol other than SIP is used.

FIG. 9A is a block and message flow diagram showing a system 400 for using a PID 210 to establish a conference call on a telephony network, according to a

Bright House Networks - Ex. 1108, Page 505

second embodiment of the present invention. A single internetwork 700 again represents the combination of any access networks at which data network telephones 208, 218, and 228 reside, any data networks connecting any existing access networks, and any routers, bridges, or other similar devices. For purposes of illustration, it will be assumed that UserA is associated with the PID 210 and is located at (registered with) the first data network telephone 208. UserB is located at (registered with) the second data network telephone 218. UserC is located at (registered with) the third data network telephone 228.

UserA initiates a conference call to Users B and C by causing the PID 210 to transmit user identifiers (such as SIP URLs) of the desired communication partners (such as UserB and UserC) to the first data network telephone 208. For example, UserA can select the names or user identifiers of UserB and UserC in an address book application located on the PID 210. A call application on the PID 210 may then be used to transmit the user identifiers across the link 209 to the first data network telephone 208.

The first data network telephone 208 performs call-management procedures to initiate the call to the desired communication partners. If SIP is utilized as the call-management protocol, then the first data network telephone transmits INVITE requests to the network elements (such as data network telephones) at which the communication partners are located (or registered). If the first data network telephone does not know where the communication partners are registered, the first data network telephone will likely utilize at least one network telephony connection server (not shown in FIG. 9A) to locate the communication partners and transmit appropriate INVITE requests.

In the example shown in FIG. 9A, the first data network telephone 208 has instructed the second data network telephone 218 to transmit an INVITE request to the third data network telephone 228. If SIP, with the call control draft extension (H. Schulzrinne et al., draft-ietf-mmusic-sip-cc-01.txt, Internet Engineering Task Force), is being used as the call-management protocol, this instruction can be specified in an "also" header of the SIP INVITE message. When the second data network telephone 218 receives such an INVITE message with the "also" header indicating that the second data network telephone 218 should invite the third data network telephone 228, the second data network telephone should send an INVITE request to the third

Bright House Networks - Ex. 1108, Page 506

data network telephone 228 with an indication in the INVITE request that the INVITE request was transmitted at the direction of the first data network telephone 208.

When the communication partners (UserB and UserC) receive the INVITE requests at the second and third data network telephones 218 and 228, they may either accept or reject the requests. Assume that UserB and UserC both accept the INVITE requests by transmitting a 200 OK message according to SIP. After any necessary acknowledgement messages are transmitted by the first data network telephone to the second and third data network telephones 218 and 228, and by the second data network telephone 218 to the third data network telephone 228, data channels may be created (1) between the first data network telephone 208 and the second data network telephone 218, (2) between the first data network telephone 208 and the third data network telephone, and (3) between the second data network telephone 218 and the third data network telephone 228. Note that in this embodiment, a data channel is created between the second data network telephone 218 and the third data network telephone 228. Therefore, the first data network phone 208 need not provide mixing services for UserB and UserC to be able to communicate with each other.

FIG. 9B is a message flow diagram showing an exemplary flow of messages in a system 400 for using a PID 210 to establish a conference call on a telephony network, according to a second embodiment of the present invention. A PID 210 associated with the UserA transmits a request 502 to a first data network telephone 208 to call UserB at UserB_id and UserC at UserC_id. UserB_id and UserC_id may be SIP URLs, for example. The first data network telephone 208 may acknowledge the request to call UserB and UserC by sending an acknowledgement message 504. The first data network telephone 208 may attempt to connect UserB by sending a first INVITE message 506, preferably containing UserA session information in SDP (Session Description Protocol) format, to the second data network telephone 218 associated with UserB. In this embodiment, the INVITE request message 506 is a SIP INVITE request message that includes the call control draft extension (H. Schulzrinne et al., draft-ietf-mmusic-sip-cc-01.txt, Internet Engineering Task Force), to allow the first data network telephone 208 to instruct the second data network telephone 218 to send an INVITE request to the third data network telephone 228 by using an "also" header in the SIP INVITE message 506. A network telephony access server, such as the second network telephony access server 238 may be accessed to locate the second data network telephone as being registered with UserB. Similarly, the first data

Bright House Networks - Ex. 1108, Page 507

network telephone 208 then may attempt to connect UserC by sending a second INVITE message 508, preferably containing UserA session information in SDP format, to a third data network telephone 228 associated with UserC. A network telephony access server, such as the third network telephony access server 237 may be accessed to locate the third data network telephone as being registered with UserC. The second and third data network telephones 218 and 228 then may respond by sending separate 200 OK messages 510 and 512 if SIP is being used as the call-management protocol. The first data network telephone 208 may acknowledge the responses 510 and 512 by transmitting ACK messages 514 and 516 to the second and third data network telephones 218 and 228.

After the call has been initiated according to the procedure described above, communications can be transmitted over data channels created by the data network telephones 208, 218, and 228. A first data channel 518 is created between the first data network telephone 208 and the second data network telephone 218. A second data channel 522 is created between the first data network telephone 208 and the third data network telephone 228. A third data channel 524 is created between the second data network telephone 218 and the third data network telephone 228. Additional data channels may also be created to communicate information between the data network telephones. Voice data as well as other data types may be communicated across the data channels. If UserA decides to terminate the call, UserA can cause the first data network telephone 208 to transmit a first BYE message 526 to the second data network telephone 218 and a second BYE message 528 to the third data network telephone 228. The second and third data network telephones 218 and 228 may respond by sending 200 OK messages 530 and 532 to the first data network telephone 208. Variations of the messages described above can also be used, such as if a call-management protocol other than SIP is used.

FIG. 10A is a block and message flow diagram showing a system 500 for using a PID 210 to establish a conference call on a telephony network, according to a third embodiment of the present invention. A single internetwork 700 represents the combination of any access networks at which data network telephones 208, 218, and 228 reside, any data networks connecting any existing access networks, and any routers, bridges, or other similar devices. A conference server 710 is shown connected to the internetwork 700, but may be connected to any data network or access network within the internetwork 700, including an access network other than

Bright House Networks - Ex. 1108, Page 508

one to which the data network telephones 208, 218, and 228 are connected. For purposes of illustration, it will be assumed that UserA is associated with the PID 210 and is located at (registered with) the first data network telephone 208. UserB is located at (registered with) the second data network telephone 218. UserC is located at (registered with) the third data network telephone 228.

UserA initiates a conference call to Users B and C by causing the PID 210 to transmit user identifiers (such as SIP URLs) of the desired communication partners (such as UserB and UserC) to the first data network telephone 208. For example, UserA can select the names or user identifiers of UserB and UserC in an address book application located on the PID 210. A call application on the PID 210 may then be used to transmit the user identifiers across the link 209 to the first data network telephone 208.

The first data network telephone 208 performs call-management procedures to initiate conference call. If SIP is utilized as the call-management protocol, then the first data network telephone 208 transmits an INVITE request to the conference server 710. In the example shown in FIG. 10A, the INVITE request instructs the conference server 710 to transmit INVITE requests to the second and third data network telephones 218 and 228. If SIP, with the call control draft extension (H. Schulzrinne et al., draft-ietf-mmusic-sip-cc-01.txt, Internet Engineering Task Force), is being used as the call-management protocol, the first data network telephone 208 can specify this instruction in an "also" header of the SIP INVITE message. When the conference server 710 receives such an INVITE message with the "also" header indicating that the conference server 710 should invite the second and third data network telephones 218 and 228, the conference server 710 should send INVITE requests to the second and third data network telephones 218 and 228 with an indication in the INVITE request that the INVITE request was transmitted at the direction of the first data network telephone 208.

When the communication partners (UserB and UserC) receive the INVITE requests at the second and third data network telephones 218 and 228, they may either accept or reject the requests. Assume that UserB and UserC both accept the INVITE requests by transmitting a 200 OK message according to SIP. After any necessary acknowledgement messages are transmitted by the second and third data network telephones 218 and 228 to the conference server 710, data channels may be created (1) between the first data network telephone 208 and the conference server 710, (2)

Bright House Networks - Ex. 1108, Page 509

between the second data network telephone 218 and the conference server 710, and (3) between the third data network telephone 228 and the second data network telephone 218. Note that in this embodiment, no data channel needs to be created between any of the first, second, or third data network telephones 208, 218, and 228. This is because the conference server has data channels to all of the data network telephones participating in the conference call, and is therefore able to mix all incoming data channel streams so that each of the data network telephones 208, 218, and 228 is able to communicate with every other data network telephone.

FIG. 10B is a message flow diagram showing an exemplary flow of messages in a system 400 for using a PID 210 to establish a conference call on a telephony network, according to a third embodiment of the present invention. A PID 210 associated with the UserA transmits a request 834 to a first data network telephone 208 to set up a conference call that includes UserB at UserB_id and UserC at UserC_id. UserB_id and UserC_id may be SIP URLs, for example. The first data network telephone 208 may acknowledge the request to call UserB and UserC by sending an acknowledgement message 836. The first data network telephone 208 sends an INVITE message 838 to a conference server 710. The INVITE message 838 is preferably a SIP INVITE request message that includes the call control draft extension (H. Schulzrinne et al., draft-ietf-mmusic-sip-cc-01.txt, Internet Engineering Task Force), to allow the first data network telephone 208 to instruct the conference server 710 to send INVITE requests to the second and third data network telephones 218 and 228 by using an "also" header in the SIP INVITE message 838. The conference server 710 responds with a 200 OK message 840, and the first data network telephone 208 sends an acknowledgment message 843. The conference server 710 proceeds to transmit INVITE messages 842 and 844 to the second and third data network telephones 218 and 228. The second and third data network telephones 218 and 228 respond with 200 OK messages 846 and 848 to the conference server 710 that include SDP (Session Description Protocol) information corresponding to the second and third data network telephones 218 and 228. Network telephony access servers, such as the second network telephony access servers 250, 238, and 237 may be accessed to locate the data network telephones 218 and 228, and the conference server 710. The conference server 710 acknowledges the responses of the second and third data network telephones 218 and 228 with ACK messages 850 and 852.

Bright House Networks - Ex. 1108, Page 510

After the conference call has been set up according to the procedure described above, communications can be transmitted over data channels created by the data network telephones 208, 218, and 228, and the conference server 710. A first data channel 854 is created between the first data network telephone 208 and the conference server 710. A second data channel 856 is created between the second data network telephone 218 and the conference server 710. A third data channel 858 is created between the third data network telephone 228 and the conference server 710. Additional data channels may also be created to communicate information between the data network telephones. Voice data as well as other data types may be communicated across the data channels. Mixing is controlled by a mixer in the conference server 710 so that all parties to the conference call hear all communications, if desired. If UserA decides to terminate the call, UserA can cause the first data network telephone 208 to transmit a BYE message 860 to the conference server 710. The conference server 710 may respond by sending a 200 OK messages 862 to the first data network telephone 208. Variations of the messages described above can also be used, such as if a call-management protocol other than SIP is used.

FIG. 11 is a pictorial diagram showing an exemplary display screen 902 of a PID 210 displaying entries from an address book application 926 according to one embodiment of the present invention. Shown are a first contact entry 928 and a second contact entry 932. The entries each contain contact information, such as name, address, email, SIP URL, and other information. In the preferred embodiment, the user of the PID 210 is given the option to flag entries in the address book, such as by checking a flag field 930 in the contact entry 928. When the communication parties to the impending conference call have been flagged (UserB 928 and UserC 932 in FIG. 11), the user of the PID 210 can click on a box 902 to cause a conference call to be placed to people, numbers, or locations referred to by the flagged contact entries.

FIG. 12 is a pictorial diagram showing an exemplary display screen 902 of a PID 210 displaying a conference call attempt 948 according to one embodiment of the present invention. Such a screen 902 may be part of a conference call application 946 executed after contact entries are flagged in the example of FIG. 11 to initiate a conference call. The conference call application 946 is shown attempting a conference call to two communication partners: UserB 950 and UserC 952. Note that a timeout period may be set to end a call attempt to a communication partner that does

Bright House Networks - Ex. 1108, Page 511

not respond. Other methods for handling unanswered requests may also be implemented, and are intended to be within the scope of the present invention.

While the invention has been described in conjunction with presently preferred embodiments of the invention, persons of skill in the art will appreciate that variations may be made without departure from the scope and spirit of the invention. For example, the access networks shown in FIG. 2 may comprise any other suitable type of local area network or service infrastructure.

In addition, protocols of various types are referenced throughout. While preferred and alternative embodiments may implement selected protocols, any suitable replacement protocol not mentioned, or any function not part of a protocol used to replace a corresponding function from a protocol may be implemented without departing from the scope of the invention.

This true scope and spirit is defined by the appended claims, interpreted in light of the foregoing.

Bright House Networks - Ex. 1108, Page 512

WE CLAIM:

1. A system for establishing a conference call on a data network telephony system including a network to providing data connectivity for a plurality of data communications channels using data transport protocols, the system comprising in combination:

a plurality of data network telephones connected to the network, each data network telephone operable to communicate a voice signal as voice-over-data packets on a voice-over-data channel, the voice-over-data channel being one of the plurality of data communications channels on the network, the data network telephones each operable to convert voice-over-data packets communicated on the voice-over-data channel to voice signals; and

a portable information device comprising a user interface and a data network telephone interface, the user interface operable to accept communication partner data from a user, the first data network telephone interface operable to communicate the communication partner data to a first data network telephone to enable the first data network telephone to invite at least one communication partner to a conference call, the at least one communication partner specified in the communication partner data.

2. The system of Claim 1 wherein the user communicates voice data on the voice-over-data channel with the at least one communication partner.

3. The system of Claim 1 wherein each data network telephone includes a device identifier.

4. The system of Claim 3 wherein the device identifier includes an Internet Protocol (IP) address.

5. The system of Claim 3 wherein the communication partner data includes at least one Session Initiation Protocol (SIP) address.

6. The system of Claim 3 wherein the communication partner data includes at least one E.164 telephone number.

Bright House Networks - Ex. 1108, Page 513

7. The system of Claim 1 further comprising:

at least one database accessible through the network to store a plurality of device identifiers and a plurality of user identifiers associated with the plurality of device identifiers; and

at least one network telephony connection server operable to access the at least one database to initiate the voice-over-data channel in response to the first data network telephone inviting the at least one communication partner.

8. The system of Claim 1, wherein the conference call is set up in accordance with the Session Initiation Protocol (SIP).

9. The system of Claim 1, wherein the conference call is set up in accordance with the H.323 Protocol.

10. The system of Claim 1 wherein the conference call is set up in accordance with the MEGACO protocol.

11. The system of Claim 1 wherein the conference call is set up in accordance with the MGCP protocol.

12. The system of Claim 7 wherein the first data network telephone sends an invite message to invite the at least one communication partner, wherein the invite message includes a communication partner user identifier, wherein the request message includes a callee user identifier, and wherein the network telephony connection server accesses the database to determine a communication partner device identifier corresponding to the communication partner user identifier.

13. The system of Claim 2 wherein the user communicates PID data on a PID data channel with the at least one communication partner, the PID data channel being one of the plurality of data communication channels on the data network.

14. The system of Claim 1, further comprising a conference server linked to the network, wherein the first data network telephone invites the at least one communication partner to the conference call by inviting the conference server, and wherein the

Bright House Networks - Ex. 1108, Page 514

conference server invites each at least one communication partner at corresponding data network telephones.

15. A method for enabling a user to initiate a conference call with a portable information device, comprising in combination:
accepting from the user at the portable information device at least one contact entry selection corresponding to at least one communication partner, wherein each of the at least one contact entry selections includes a user identifier;
and
transmitting the at least one user identifier to a data network telephone linked to a data network, wherein the data network telephone establishes the conference call by inviting the at least one communication partner to the conference call, whereby the user may use the data network telephone to communicate voice data with the at least one communication partner via the data network.

16. A computer-readable medium containing instructions for causing a processing unit to perform the method of Claim 15.

17. The method of Claim 15, wherein the data network telephone invites the at least one communication partner by transmitting at least one invite message to a registration server, wherein the at least one invite message includes the user identifier, wherein the registration server accesses a registration database to determine a device identifier registered to the user identifier, and wherein the device identifier corresponds to a communication partner data network telephone linked to the data network.

18. The method of Claim 15, wherein the portable information device is a personal digital assistant (PDA).

19. The method of Claim 15, wherein the portable information device is a wireless phone.

20. The method of Claim 15, wherein the data network is a public internet.

Bright House Networks - Ex. 1108, Page 515

21. The method of Claim 15, wherein the conference call is established according to the Session Initiation Protocol (SIP).

22. The method of Claim 15, wherein the conference call is established according to the H.323 protocol.

23. The method of Claim 15, wherein the conference call is established according to the MGCP protocol.

24. The method of Claim 15, wherein the conference call is established according to the MEGACO protocol.

25. The method of Claim 15, wherein the user makes the at least one contact entry selection using an address book application located on the portable information device.

26. The method of Claim 15, further comprising:
accepting PID data from the user at the portable information device; and transmitting the PID data to the data network telephone, wherein the data network
telephone communicates the PID data to at least one communication partner data network
telephone to enable at least one of the communication partners to receive the PID data at a communication partner portable information device.

27. The method of Claim 15, wherein the PID data is non-voice data that is communicated concurrently with the voice data.

28. The method of Claim 16, wherein at least two communication partners are invited, and wherein the data network telephone mixes the voice data to enable each communication partner to communicate voice data with each other communication partner and the user.

29. The method of Claim 15, wherein at least two communication partners are invited, wherein each of the communication partners is associated with a communication partner data network telephone, and wherein at least one of the communication partners invites

Bright House Networks - Ex. 1108, Page 516

another communication partner to enable each communication partner to communicate voice data with each other communication partner and the user.

30. The method of Claim 15, wherein the data network telephone invites the at least one communication partner to the conference call by inviting a conference server, and wherein the conference server invites each of at least one communication partner data network telephones corresponding to each of the at least one communication partner.

31. A data network telephone for use in establishing a data network telephony conference call, comprising in combination:
a network interface linking a first data network telephone to a data network, wherein the data network includes a plurality of data network telephones with which the first data network telephone may be used to communicate voice data in a conference call;
a PID interface for accepting PID data from a portable information device associated with a user, wherein the PID data includes at least one user identifier corresponding to at least one communication partner, and wherein the at least one communication partner is selected by the user via an address book application on the portable information device;
a processor for constructing at least one invite message containing the at least one user identifier, wherein the invite message is used to invite the at least one communication partner to the conference call; and
a user interface including an audio input and an audio output, wherein the user interface enables the user to communicate voice data with at least one communication partner associated with at least one of the plurality of data network telephones.

32. The data network telephone of Claim 31, wherein the PID data additionally includes non-voice-data that may be communicated to the at least one communication partner to enable the at least one communication partner to receive the non-voice data on at least once communication partner portable information device.

33. The method of Claim 31, wherein the portable information device is a personal digital assistant (PDA).

34. The method of Claim 31, wherein the portable information device is a wireless phone.

Bright House Networks - Ex. 1108, Page 517

35. The method of Claim 31, wherein the data network is a public internet

36. The method of Claim 31, wherein the invite message is constructed according to the Session Initiation Protocol (SIP).

37. The method of Claim 31, wherein the invite message is constructed according to the H.323 protocol.

38. The method of Claim 31, wherein the invite message is constructed according to the MGCP protocol.

39. The method of Claim 31, wherein the invite message is constructed according to the MEGACO protocol.

Bright House Networks - Ex. 1108, Page 518

FIG. 1

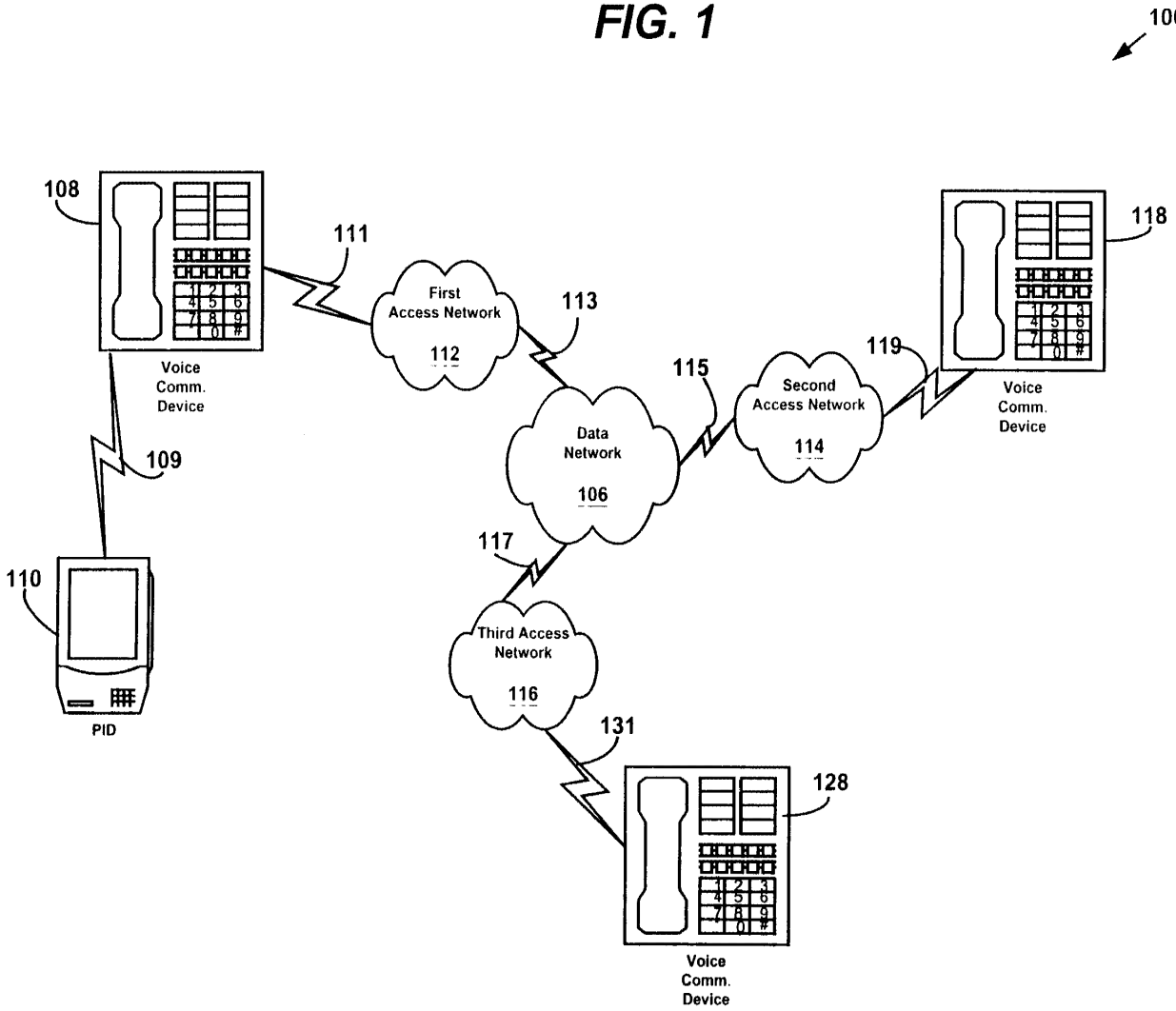
100
108
Voice
Comm.
Device
111
First
Access Network
112
113
Data
Network
106
115
Second
Access Network
114
119
118
Voice
Comm.
Device
109
110
PID
117
Third Access
Network
116
131
128
Voice
Comm.
Device

FIG. 2

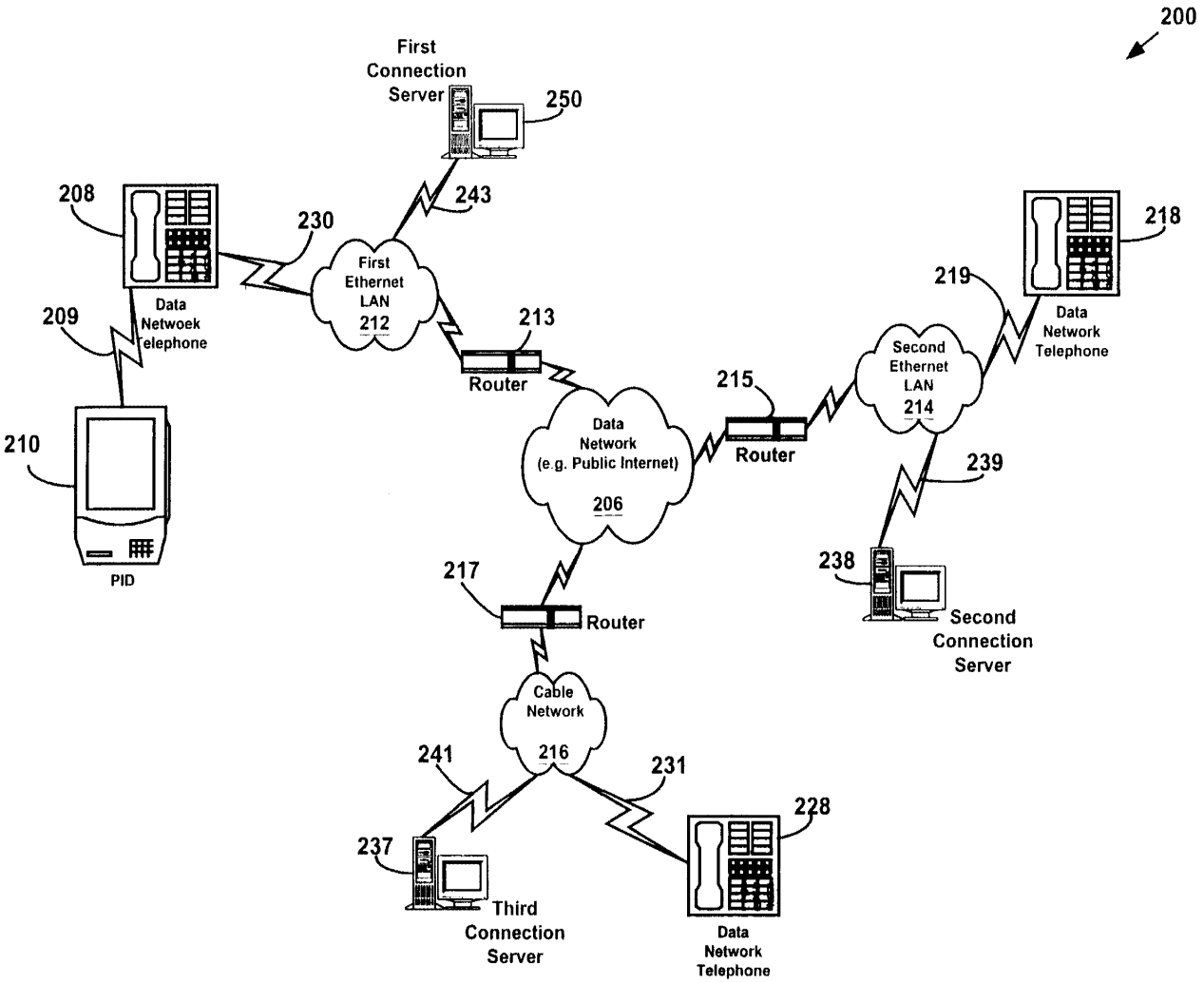
200
First Connection Server
250
243
208
230
218
219
First Ethernet LAN 212
213
Data Netwoek elephone
Data Network Telephone
209
Router
Second Ethernet LAN 214
215
210
Data Network (e.g. Public Internet) 206
Router
239
PID
238
217
Router
Second Connection Server
Cable Network 216
241
231
228
237
Third Connection Server
Data Network Telephone

FIG. 3

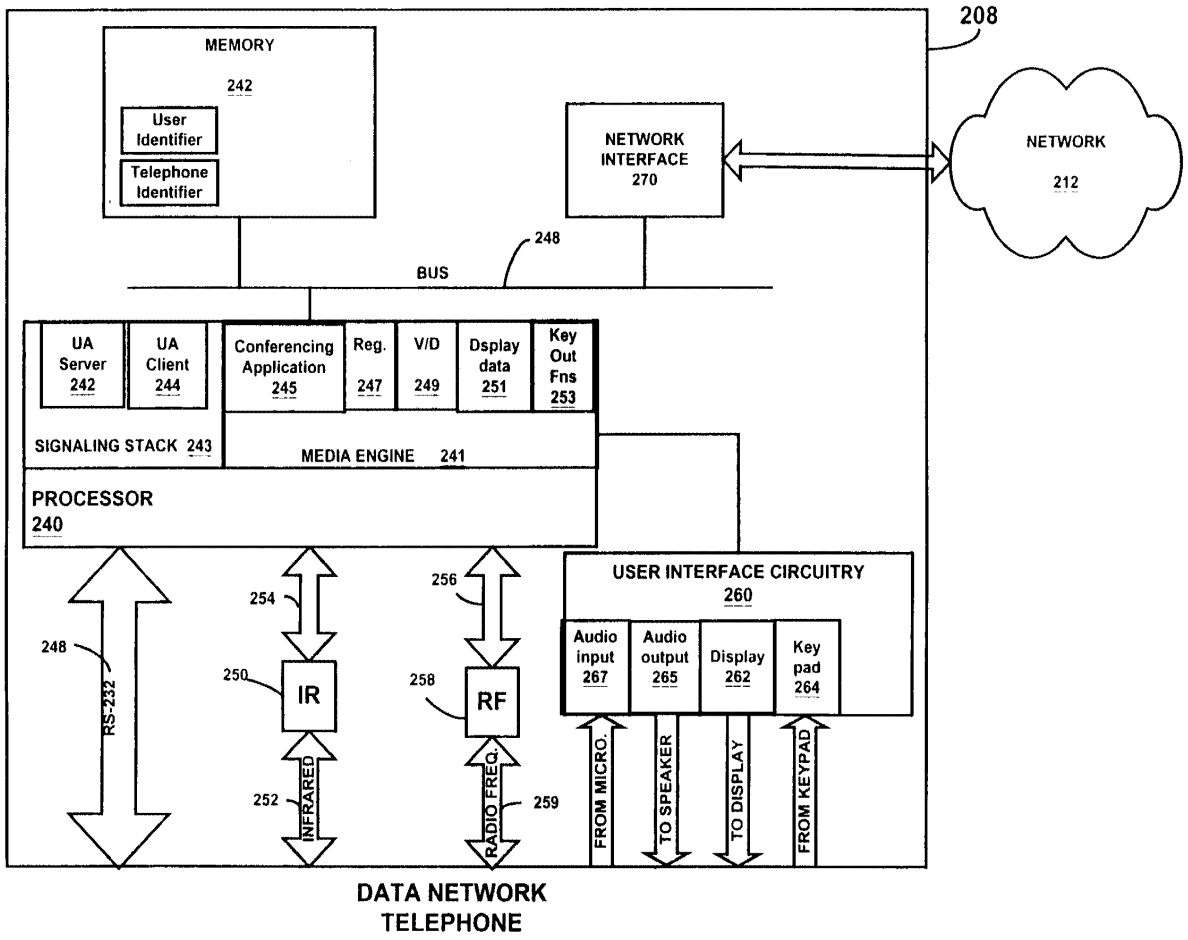
208
MEMORY
242
User Identifier
Telephone Identifier
NETWORK INTERFACE 270
NETWORK 212
248
BUS
UA Server 242
UA Client 244
Conferencing Application 245
Reg. 247
V/D 249
Dsplay data 251
Key Out Fns 253
SIGNALING STACK 243
MEDIA ENGINE 241
PROCESSOR 240
USER INTERFACE CIRCUITRY 260
Audio input 267
Audio output 265
Display 262
Key pad 264
254
256
248
250
IR
258
RF
RS-232
INFRARED
RADIO FREQ.
252
259
FROM MICRO.
TO SPEAKER
TO DISPLAY
FROM KEYPAD
DATA NETWORK TELEPHONE

FIG. 4

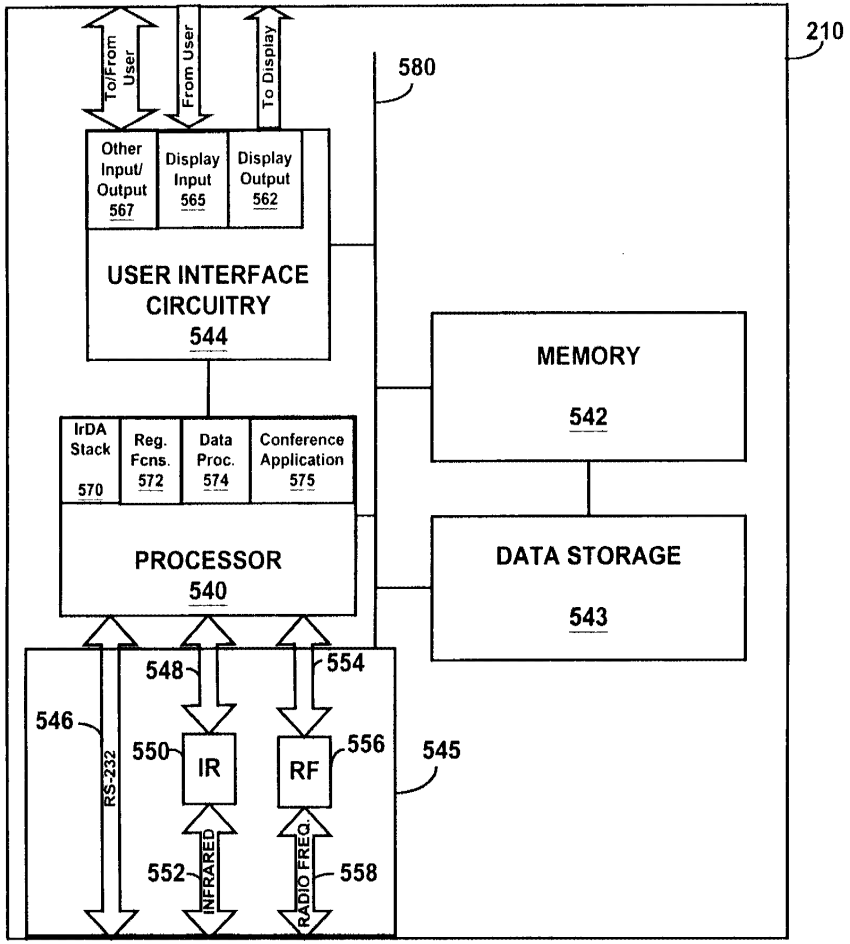
210
580
To/From User
From User
To Display
Other Input/ Output 567
Display Input 565
Display Output 562
USER INTERFACE CIRCUITRY 544
MEMORY 542
IrDA Stack 570
Reg. Fcns. 572
Data Proc. 574
Conference Application 575
PROCESSOR 540
DATA STORAGE 543
548
554
546
550
IR
RF
556
545
RS-232
552
INFRARED
RADIO FREQ.
558

PID

FIG. 5

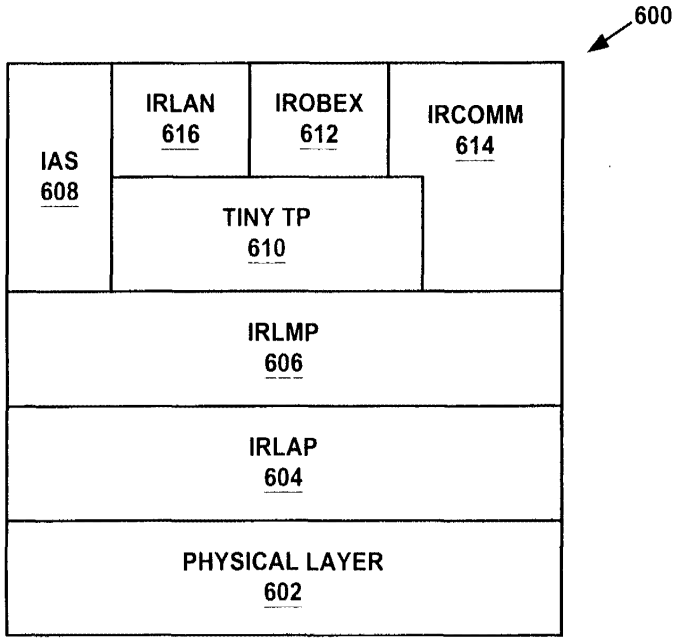
600
IAS
608
IRLAN
616
IROBEX
612
IRCOMM
614
TINY TP
610
IRLMP
606
IRLAP
604
PHYSICAL LAYER
602

FIG. 6

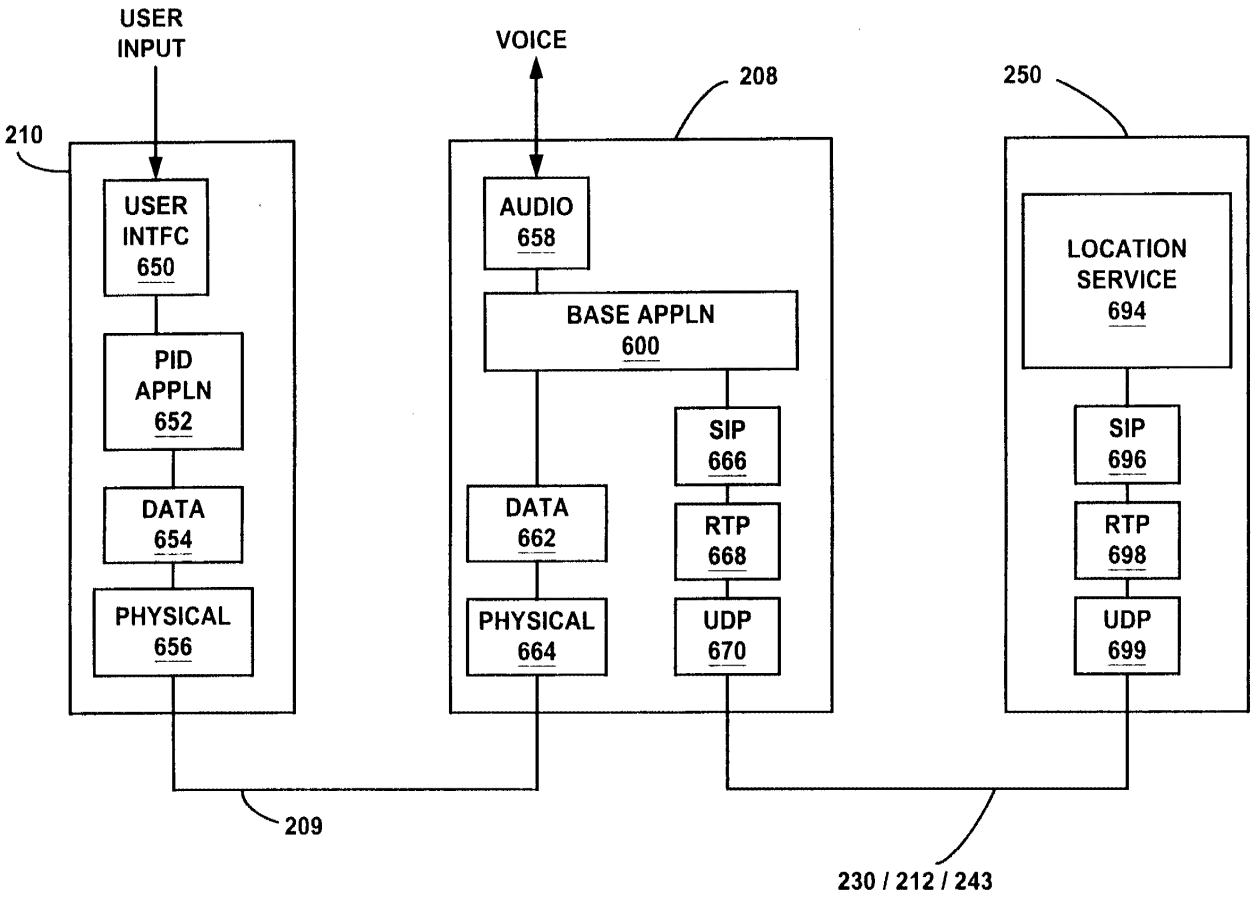
USER INPUT
VOICE
208
250
210
USER INTFC 650
PID APPLN 652
DATA 654
PHYSICAL 656
AUDIO 658
BASE APPLN 600
DATA 662
PHYSICAL 664
SIP 666
RTP 668
UDP 670
LOCATION SERVICE 694
SIP 696
RTP 698
UDP 699
209
230 / 212 / 243

FIG. 7

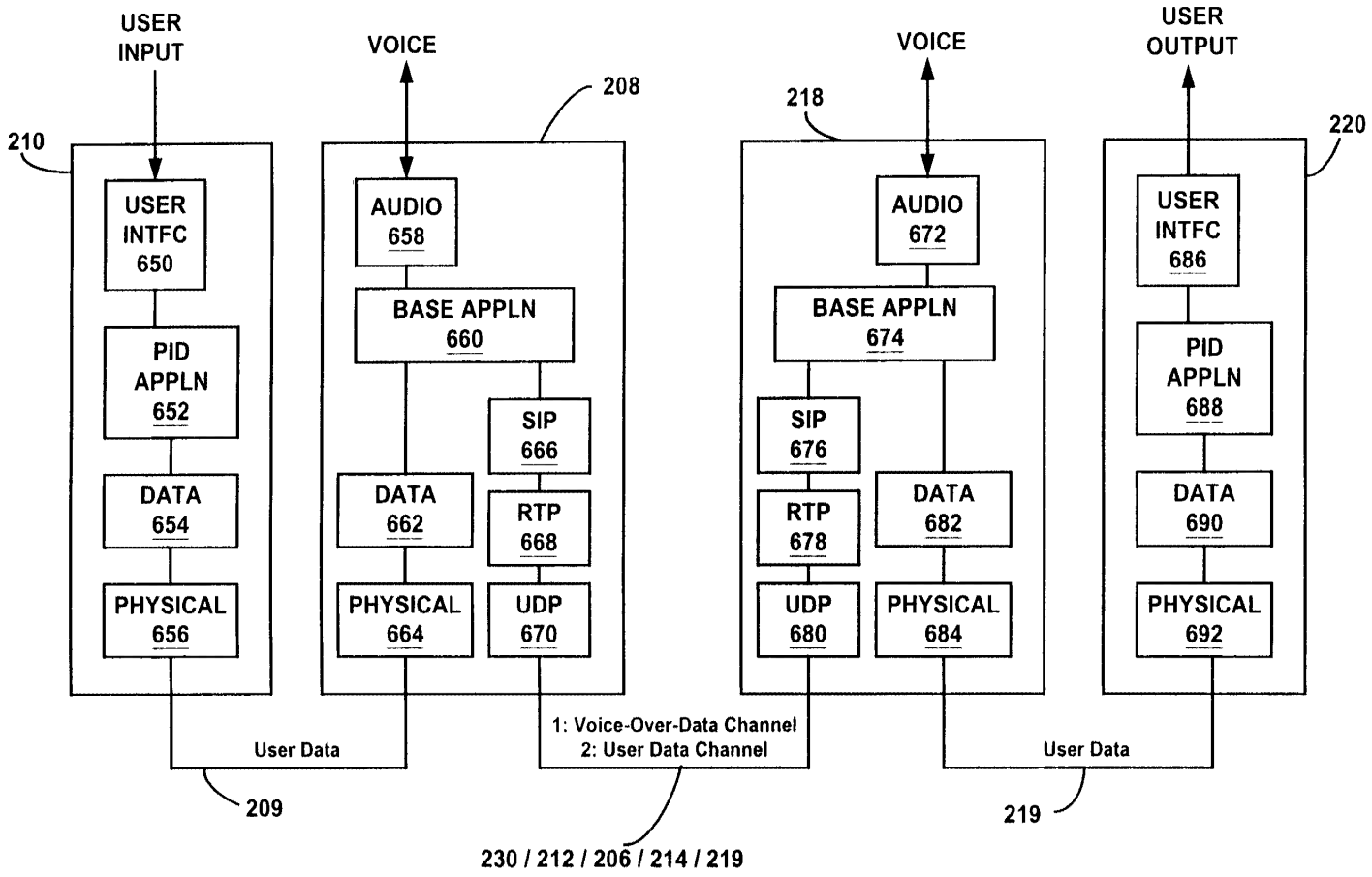
USER INPUT
VOICE
208
210
USER INTFC 650
PID APPLN 652
DATA 654
PHYSICAL 656
AUDIO 658
BASE APPLN 660
SIP 666
DATA 662
RTP 668
PHYSICAL 664
UDP 670
218
VOICE
AUDIO 672
BASE APPLN 674
SIP 676
RTP 678
DATA 682
UDP 680
PHYSICAL 684
USER OUTPUT
220
USER INTFC 686
PID APPLN 688
DATA 690
PHYSICAL 692
User Data
1: Voice-Over-Data Channel
2: User Data Channel
User Data
209
219
230 / 212 / 206 / 214 / 219

FIG. 8A

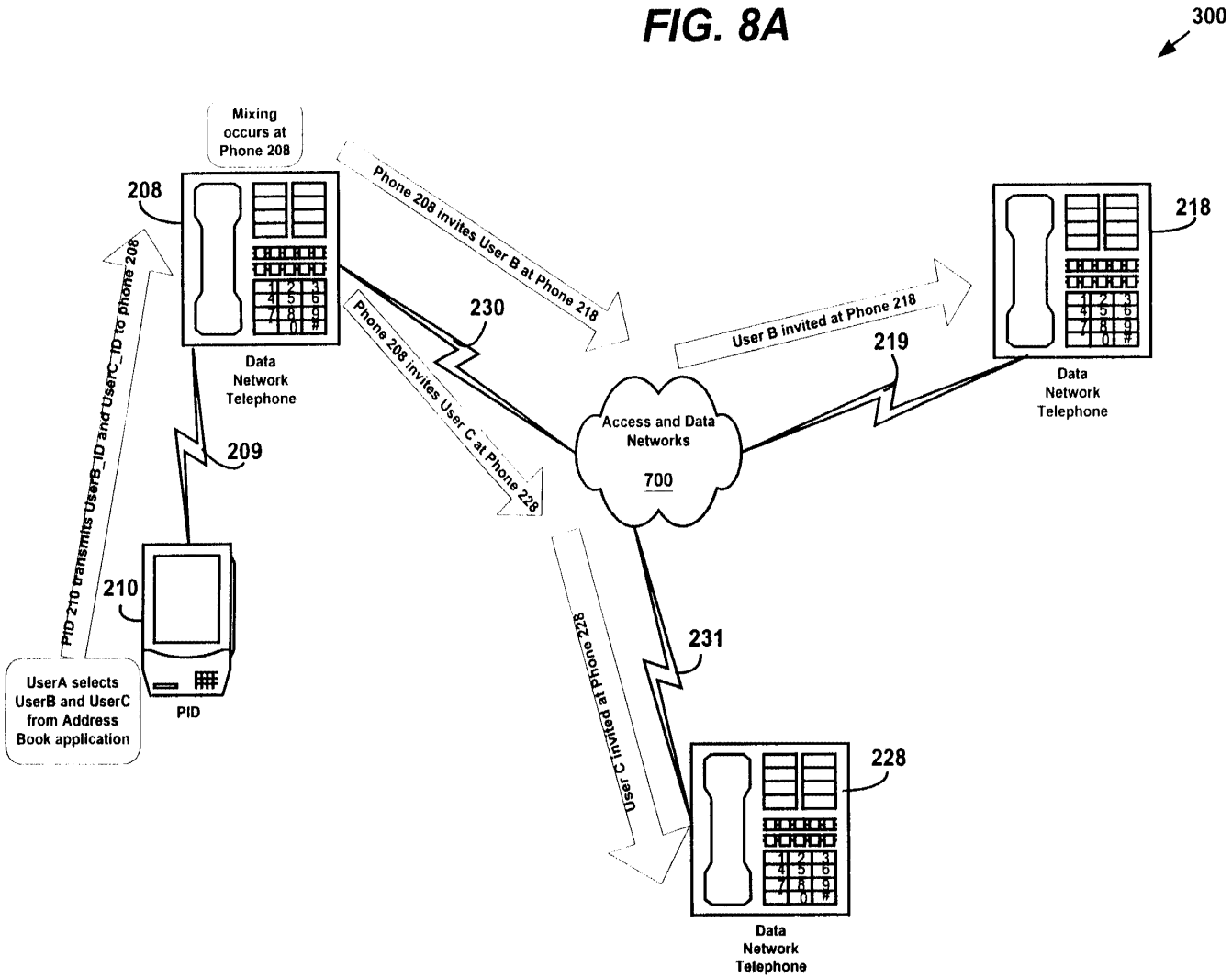
300
Mixing occurs at Phone 208
208
Phone 208 invites User B at Phone 218
218
User B invited at Phone 218
230
219
Data Network Telephone
Data Network Telephone
Access and Data Networks
700
209
Phone 208 invites User C at Phone 228
PID 210 transmits UserB_ID and UserC_ID to phone 208
210
231
User C invited at Phone 228
UserA selects UserB and UserC from Address Book application
PID
228
Data Network Telephone

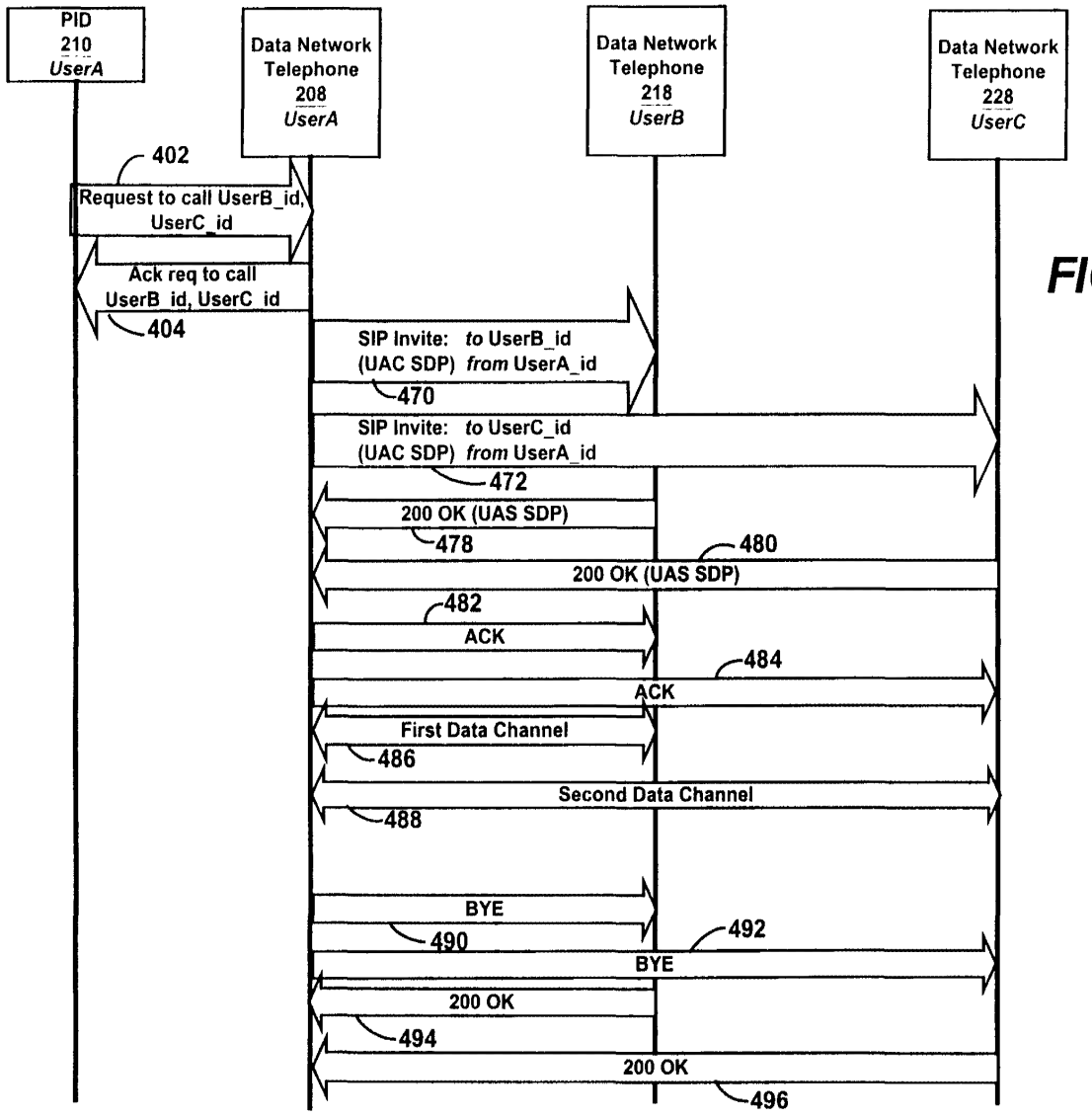
PID
210
UserA
Data Network Telephone
208
UserA
Data Network Telephone
218
UserB
Data Network Telephone
228
UserC
402
Request to call UserB_id, UserC_id
Ack req to call UserB_id, UserC_id
404
SIP Invite: to UserB_id (UAC SDP) from UserA_id
470
SIP Invite: to UserC_id (UAC SDP) from UserA_id
472
200 OK (UAS SDP)
478
480
200 OK (UAS SDP)
482
ACK
484
ACK
First Data Channel
486
Second Data Channel
488
BYE
490
492
BYE
200 OK
494
200 OK
496

FIG. 8B

FIG. 9A

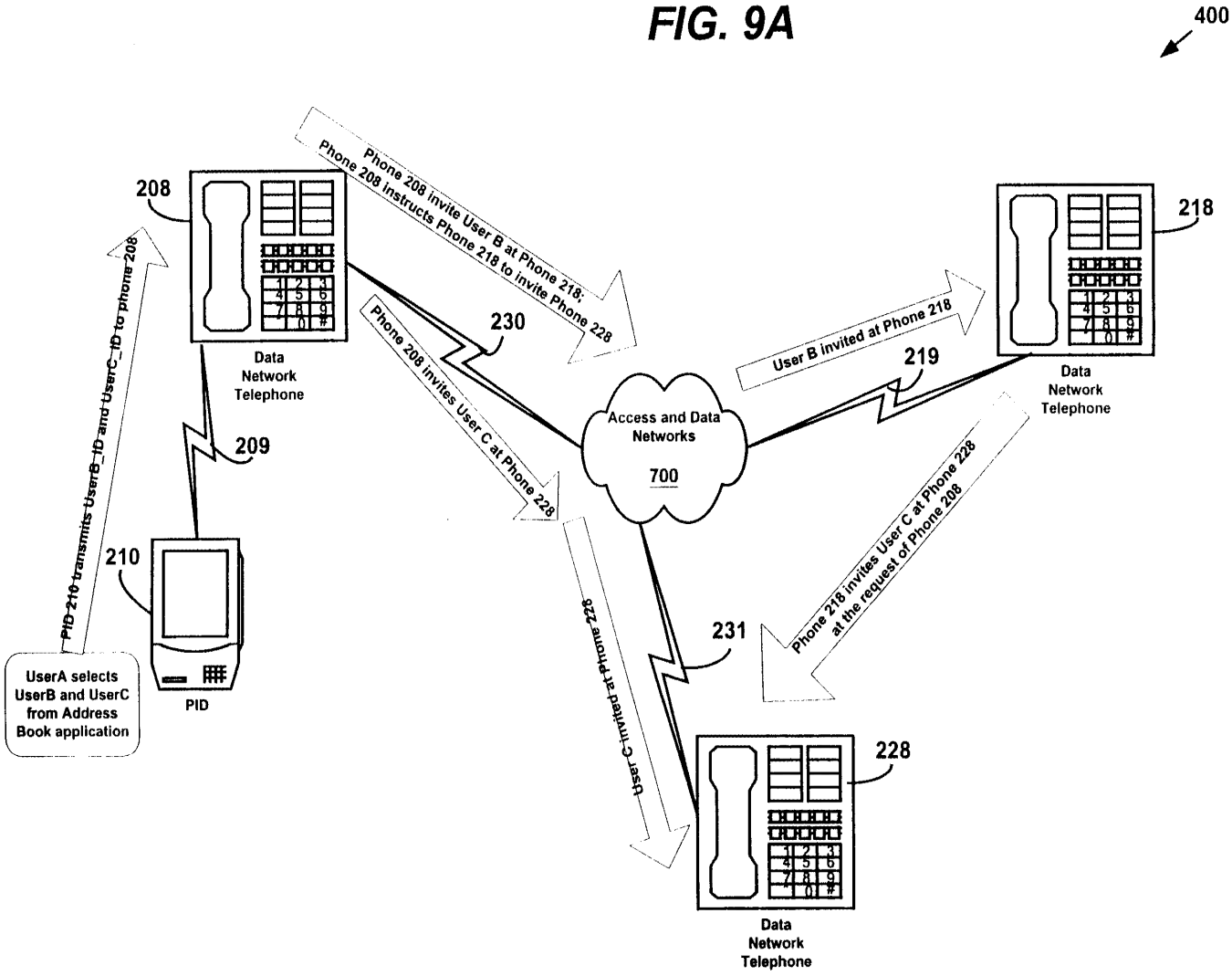
400
208
218
228
230
231
209
210
219
Data Network Telephone
Data Network Telephone
Data Network Telephone
Access and Data Networks
700
Phone 208 invite User B at Phone 218; Phone 208 instructs Phone 218 to invite Phone 228
User B invited at Phone 218
Phone 208 invites User C at Phone 228
User C invited at Phone 228
Phone 218 invites User C at Phone 228 at the request of Phone 208
PID 210 transmits UserB_ID and UserC_ID to phone 208
UserA selects UserB and UserC from Address Book application
PID

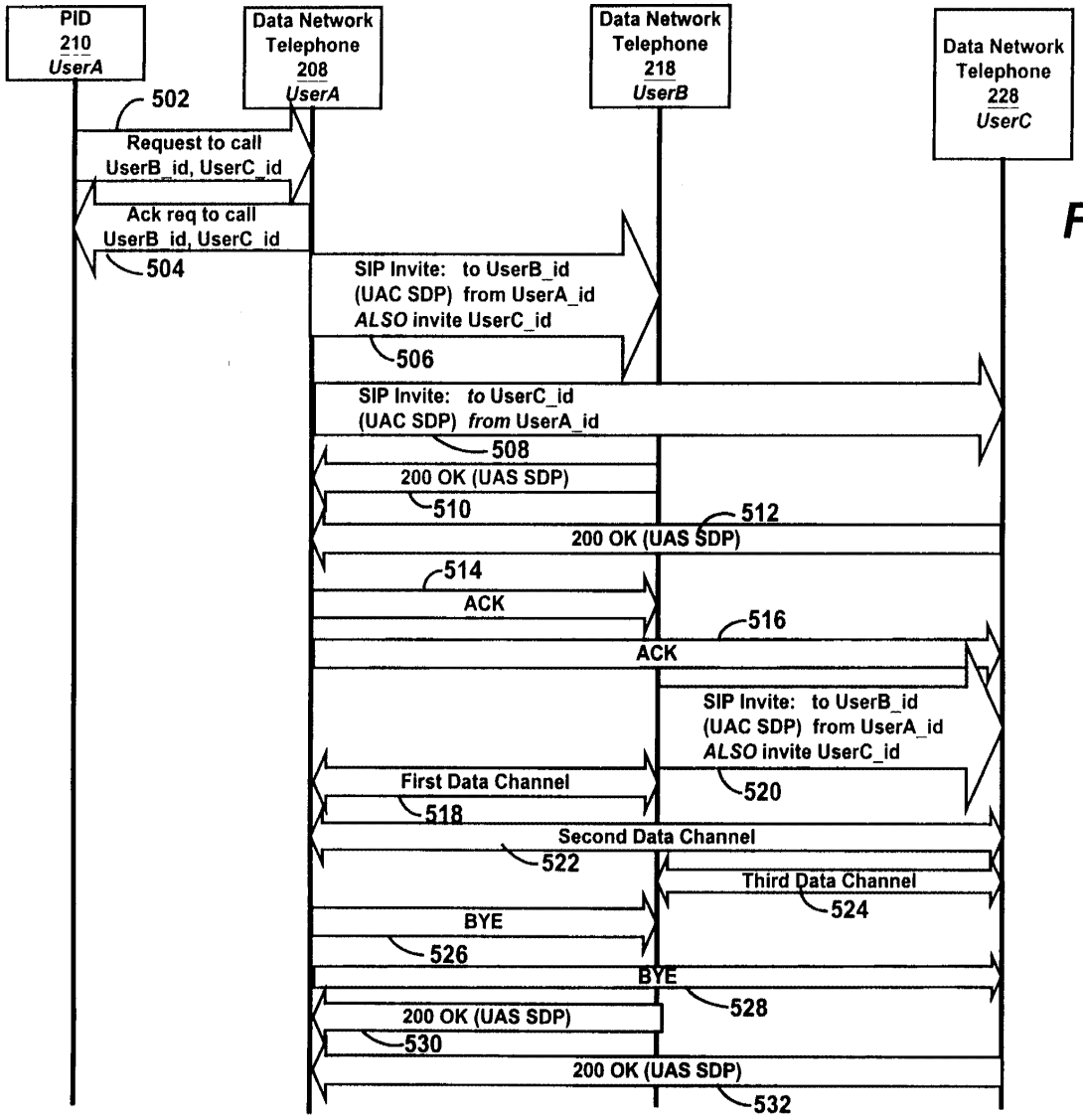
PID
210
UserA
Data Network
Telephone
208
UserA
Data Network
Telephone
218
UserB
Data Network
Telephone
228
UserC
502
Request to call
UserB_id, UserC_id
Ack req to call
UserB_id, UserC_id
504
SIP Invite: to UserB_id
(UAC SDP) from UserA_id
ALSO invite UserC_id
506
SIP Invite: to UserC_id
(UAC SDP) from UserA_id
508
200 OK (UAS SDP)
510
512
200 OK (UAS SDP)
514
ACK
516
ACK
SIP Invite: to UserB_id
(UAC SDP) from UserA_id
ALSO invite UserC_id
520
First Data Channel
518
Second Data Channel
522
Third Data Channel
524
BYE
526
BYE
528
200 OK (UAS SDP)
530
200 OK (UAS SDP)
532

FIG. 9B

FIG. 10A

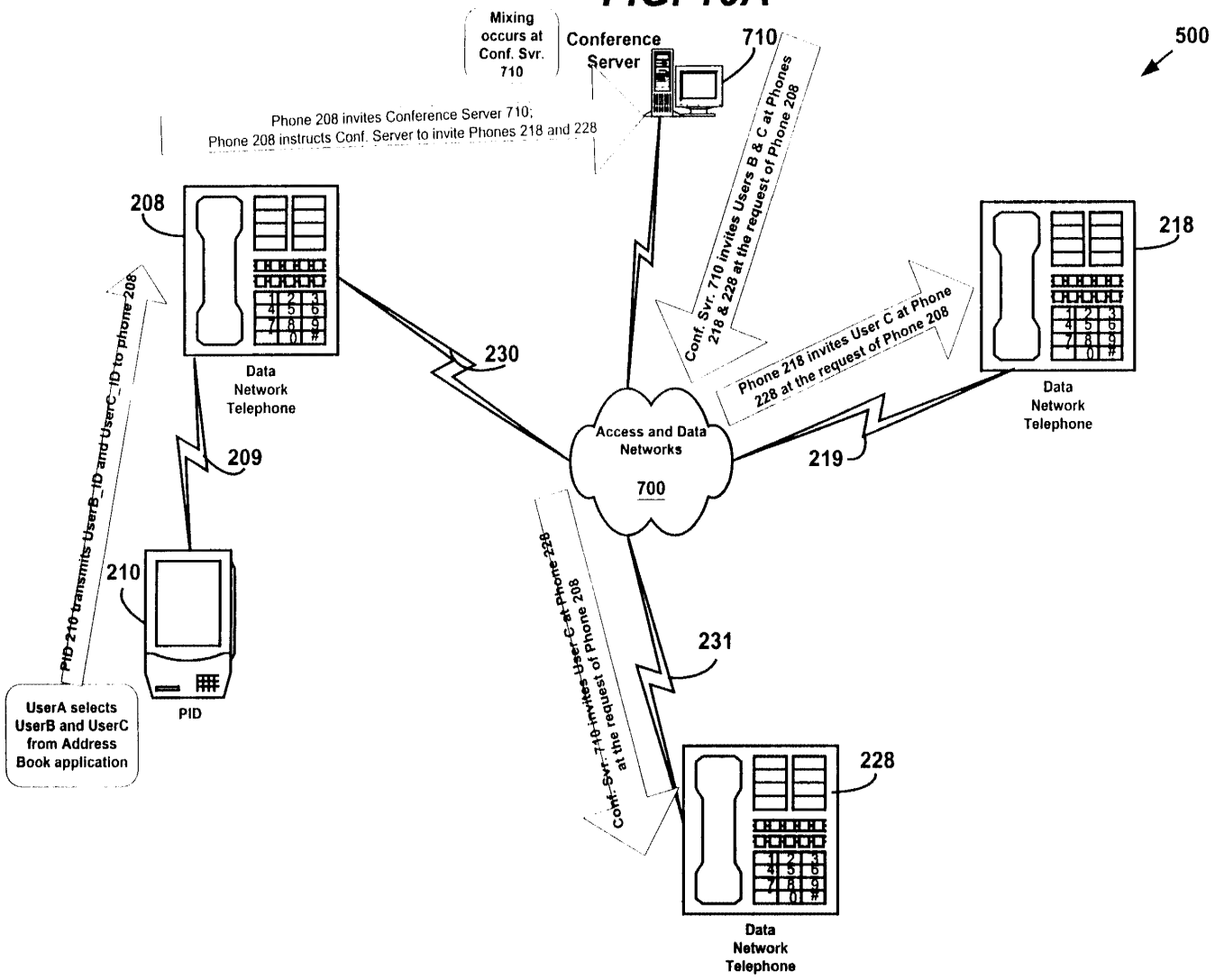
Mixing occurs at Conf. Svr. 710
Conference Server
710
500
Phone 208 invites Conference Server 710;
Phone 208 instructs Conf. Server to invite Phones 218 and 228
208
Conf. Svr. 710 invites Users B & C at Phones 218 & 228 at the request of Phone 208
218
Phone 218 invites User C at Phone 228 at the request of Phone 208
Data Network Telephone
230
Access and Data Networks
700
219
209
PID 210 transmits UserB_ID and UserC_ID to phone 208
210
231
Conf. Svr. 710 invites User C at Phone 228 at the request of Phone 208
228
UserA selects UserB and UserC from Address Book application
PID
Data Network Telephone

FIG. 10B

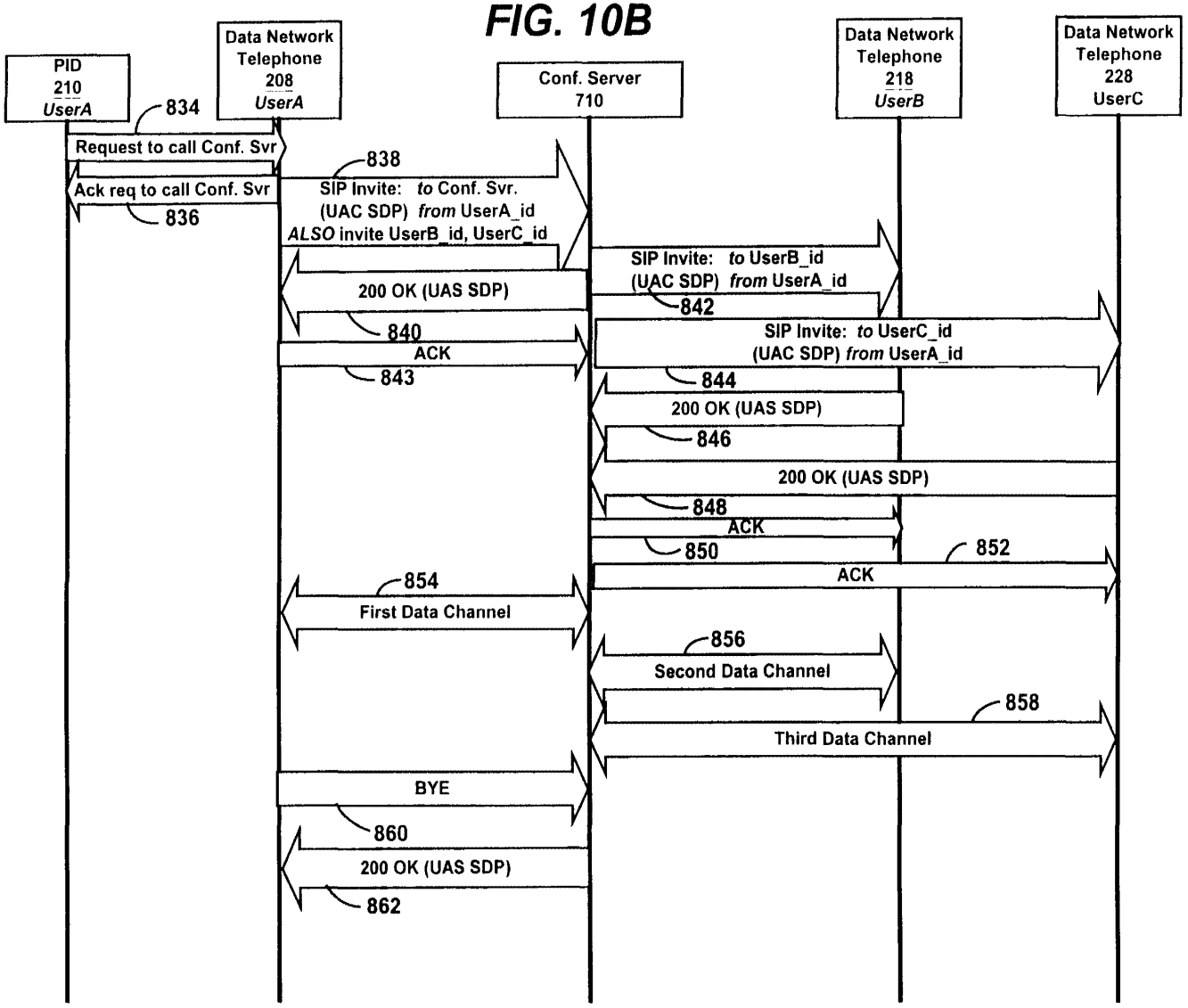
PID
210
UserA
Data Network
Telephone
208
UserA
Conf. Server
710
Data Network
Telephone
218
UserB
Data Network
Telephone
228
UserC
834
Request to call Conf. Svr
Ack req to call Conf. Svr
836
838
SIP Invite: to Conf. Svr.
(UAC SDP) from UserA_id
ALSO invite UserB_id, UserC_id
SIP Invite: to UserB_id
(UAC SDP) from UserA_id
842
200 OK (UAS SDP)
840
ACK
843
SIP Invite: to UserC_id
(UAC SDP) from UserA_id
844
200 OK (UAS SDP)
846
200 OK (UAS SDP)
848
ACK
850
852
ACK
854
First Data Channel
856
Second Data Channel
858
Third Data Channel
BYE
860
200 OK (UAS SDP)
862

FIG. 11

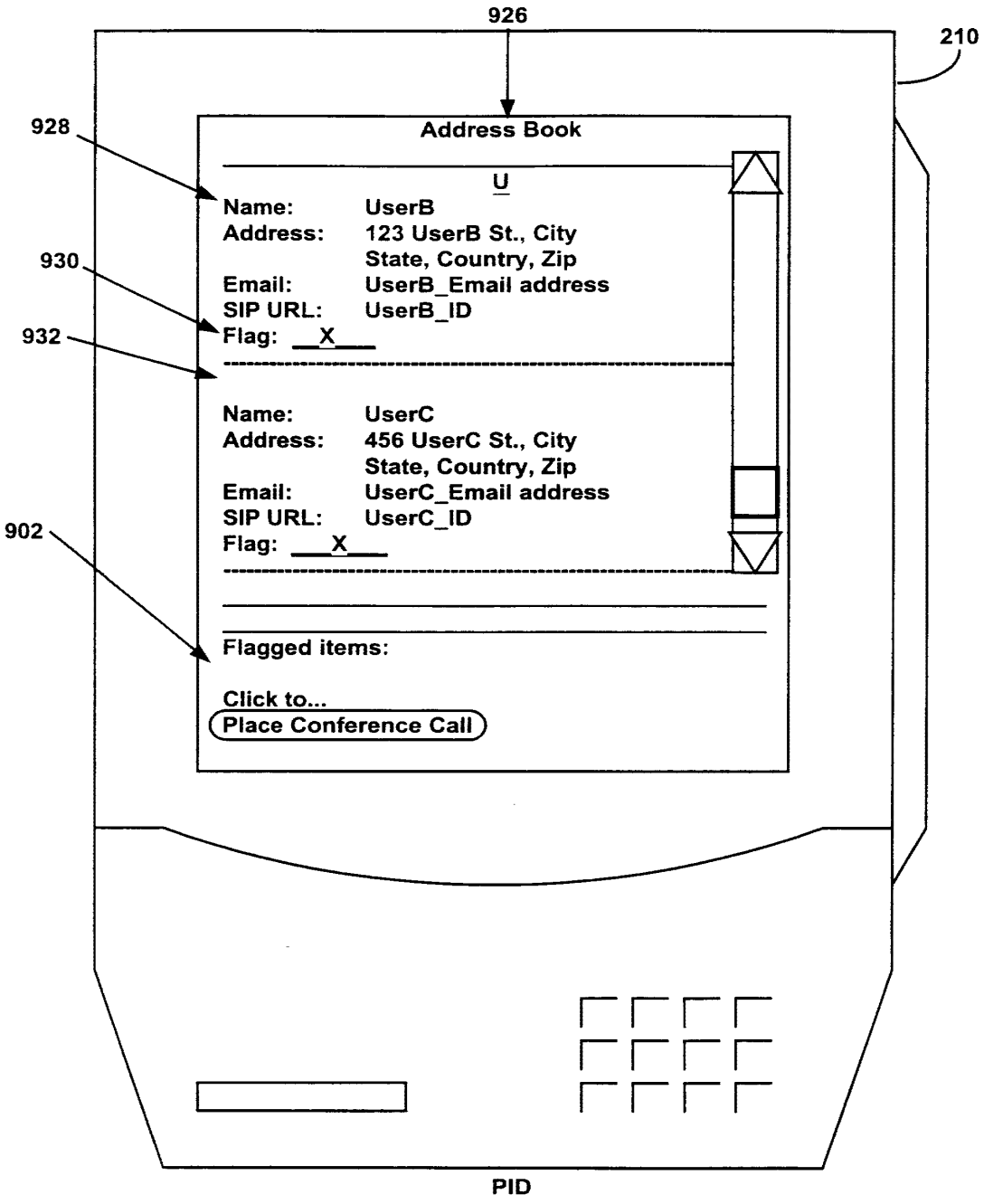
926
210
928
930
932
902
Address Book
U
Name: UserB
Address: 123 UserB St., City
State, Country, Zip
Email: UserB_Email address
SIP URL: UserB_ID
Flag: __X___
Name: UserC
Address: 456 UserC St., City
State, Country, Zip
Email: UserC_Email address
SIP URL: UserC_ID
Flag: ___X___
Flagged items:
Click to...
Place Conference Call
PID

FIG. 12

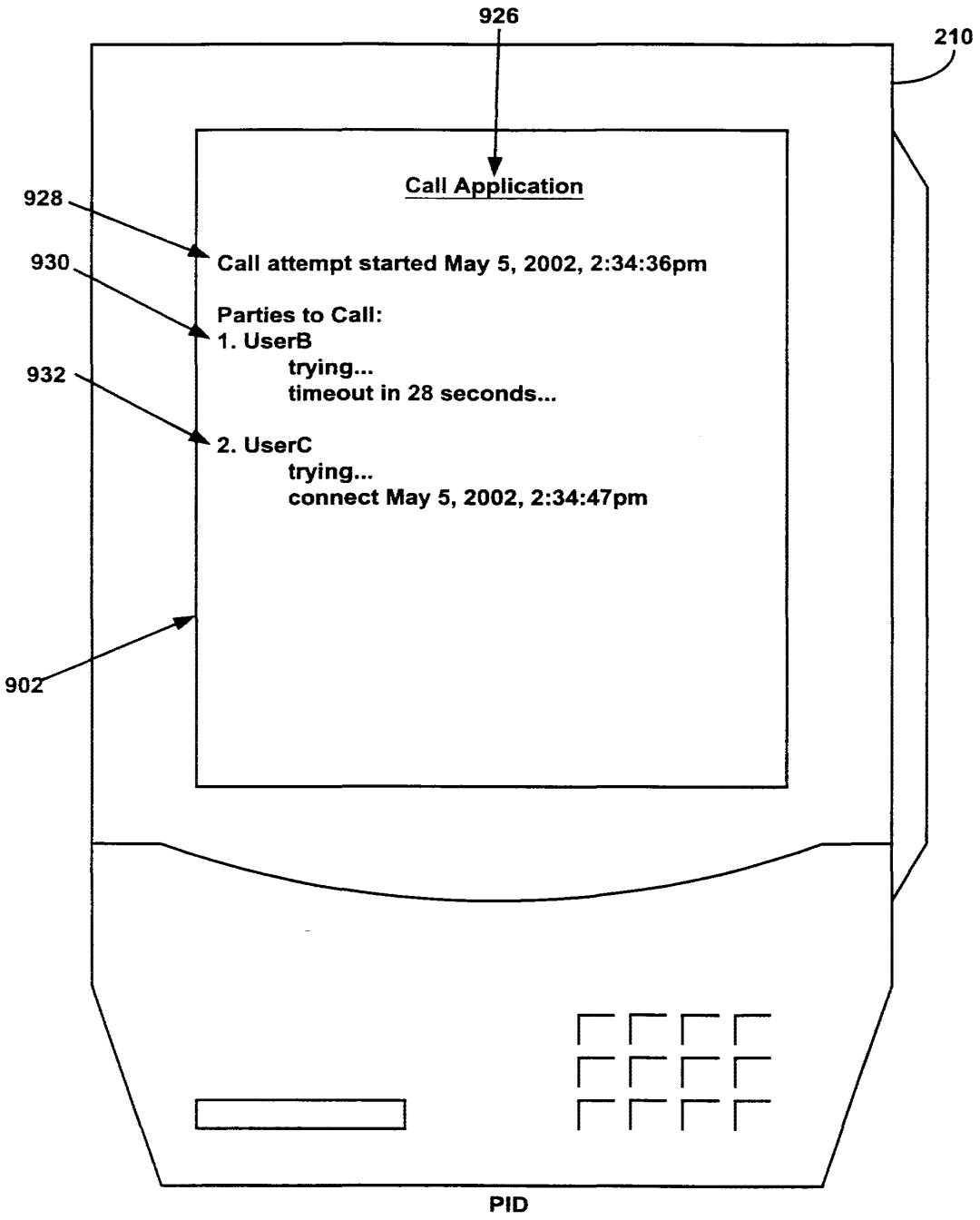
926
210
Call Application
928
930
932
Call attempt started May 5, 2002, 2:34:36pm
Parties to Call:
1. UserB
trying...
timeout in 28 seconds...
2. UserC
trying...
connect May 5, 2002, 2:34:47pm
902
PID

INTERNATIONAL SEARCH REPORT

Inte ional Application No
PCT/US 00/41020

A. CLASSIFICATION OF SUBJECT MATTER
IPC 7 H04M3/56

According to International Patent Classification (IPC) or to both national classification and IPC

B. FIELDS SEARCHED

Minimum documentation searched (classification system followed by classification symbols)
IPC 7 H04M

Documentation searched other than minimum documentation to the extent that such documents are included in the fields searched

Electronic data base consulted during the international search (name of data base and, where practical, search terms used)
EPO-Internal, WPI Data, INSPEC

C. DOCUMENTS CONSIDERED TO BE RELEVANT

Category °	Citation of document, with indication, where appropriate, of the relevant passages	Relevant to claim No.
X	DALGIC I ET AL: "TRUE NUMBER PORTABILITY AND ADVANCED CALL SCREENING IN A SIP-BASED IP TELEPHONY SYSTEM" IEEE COMMUNICATIONS MAGAZINE,IEEE SERVICE CENTER. PISCATAWAY, N.J,US, vol. 37, no. 7, July 1999 (1999-07), pages 96-101, XP000835310 ISSN: 0163-6804	1-18, 20-33, 35-39
Y	the whole document ---	19,34
Y	WO 99 12365 A (WINROTH MATS OLOF ;HYLLANDER KLAS (SE); TELIA AB (SE)) 11 March 1999 (1999-03-11) page 12, line 7 -page 16, line 25 ---	19,34
	-/--	

[X] Further documents are listed in the continuation of box C.

[X] Patent family members are listed in annex.

° Special categories of cited documents :

"A" document defining the general state of the art which is not considered to be of particular relevance

"E" earlier document but published on or after the international filing date

"L" document which may throw doubts on priority claim(s) or which is cited to establish the publication date of another citation or other special reason (as specified)

"O" document referring to an oral disclosure, use, exhibition or other means

"P" document published prior to the international filing date but later than the priority date claimed

"T" later document published after the international filing date or priority date and not in conflict with the application but cited to understand the principle or theory underlying the invention

"X" document of particular relevance; the claimed invention cannot be considered novel or cannot be considered to involve an inventive step when the document is taken alone

"Y" document of particular relevance; the claimed invention cannot be considered to involve an inventive step when the document is combined with one or more other such documents, such combination being obvious to a person skilled in the art.

"&" document member of the same patent family

Date of the actual completion of the international search	Date of mailing of the international search report
12 February 2001	21/02/2001

Name and mailing address of the ISA	Authorized officer
European Patent Office, P.B. 5818 Patentlaan 2 NL - 2280 HV Rijswijk Tel. (+31-70) 340-2040, Tx. 31 651 epo nl, Fax: (+31-70) 340-3016	Megalou, M

1

Form PCT/ISA/210 (second sheet) (July 1992)

Bright House Networks - Ex. 1108, Page 534

INTERNATIONAL SEARCH REPORT

Inte ional Application No
PCT/US 00/41020

C.(Continuation) DOCUMENTS CONSIDERED TO BE RELEVANT

Category °	Citation of document, with indication,where appropriate, of the relevant passages	Relevant to claim No.
A	WO 98 37665 A (VAZIRI FARAMARZ ;WIMSATT JOHN D (US); FONEFRIEND SYSTEMS INC (US)) 27 August 1998 (1998-08-27) page 42, line 13 -page 21; figure 13 ---	1-39
A	PEPPER D J ET AL: "The CallManager system: A platform for intelligent telecommunications services" SPEECH COMMUNICATION,NL,ELSEVIER SCIENCE PUBLISHERS, AMSTERDAM, vol. 23, no. 1-2, 1 October 1997 (1997-10-01), pages 129-139, XP004117214 ISSN: 0167-6393 the whole document ---	1-39
A	ANQUETIL L -P ET AL: "MEDIA GATEWAY CONTROL PROTOCOL AND VOICE OVER IP GATEWAYS. MGCP AND VOIP GATEWAYS WILL OFFER SEAMLESS INTERWORKING OF NEW VOIP NETWORKS WITH TODAY'S TELEPHONE NETWORKS" ELECTRICAL COMMUNICATION,ALCATEL. BRUSSELS,BE, 1 April 1999 (1999-04-01), pages 151-157, XP000830045 ISSN: 0013-4252 the whole document -----	10,11, 23,24, 38,39

1

Form PCT/ISA/210 (continuation of second sheet) (July 1992)

Bright House Networks - Ex. 1108, Page 535

INTERNATIONAL SEARCH REPORT

information on patent family members

Inte ional Application No
PCT/US 00/41020

Patent document cited in search report	Publication date	Patent family member(s)	Publication date
WO 9912365 A	11-03-1999	SE 509926 C	22-03-1999
		EP 1008266 A	14-06-2000
		NO 20000902 A	27-04-2000
		SE 9703121 A	01-03-1999
WO 9837665 A	27-08-1998	AU 6666898 A	09-09-1998
		EP 0966815 A	29-12-1999

Form PCT/ISA/210 (patent family annex) (July 1992)

(12) INTERNATIONAL APPLICATION PUBLISHED UNDER THE PATENT COOPERATION TREATY (PCT)

(19) World Intellectual Property Organization
International Bureau

(43) International Publication Date
5 April 2001 (05.04.2001)

PCT

(10) International Publication Number
WO 01/24500 A1

(51) International Patent Classification[7]: H04M 7/00

(21) International Application Number: PCT/US00/26594

(22) International Filing Date:
27 September 2000 (27.09.2000)

(25) Filing Language: English

(26) Publication Language: English

(30) Priority Data:
09/406,322 27 September 1999 (27.09.1999) US

(63) Related by continuation (CON) or continuation-in-part (CIP) to earlier application:
US 09/406,322 (CON)
Filed on 27 September 1999 (27.09.1999)

(71) Applicant *(for all designated States except US)*: **3COM CORPORATION** [US/US]; 3800 Golf Road, Rolling Meadows, IL 60008 (US).

(72) Inventors; and

(75) Inventors/Applicants *(for US only)*: **SCHUSTER, Guido, M.** [CH/US]; Apartment 408, 1433 Perry Street, Des Plaines, IL 60016 (US). **SIDHU, Ikhlaq, S.** [US/US]; 403 River Grove Lane, Vernon Hills, IL 60061 (US). **DEAN, Frederick, D.** [US/US]; 2311 N. Greenview Avenue, Chicago, IL 60614 (US). **BELKIND, Ronnen** [US/US]; 1960 Lincoln Park West #2503, Chicago, IL 60614 (US).

(74) Agent: **PEREZ, Enrique**; McDonnell Boehnen Hulbert & Berghoff, 32nd Floor, 300 South Wacker Drive, Chicago, IL 60606 (US).

(81) Designated States *(national)*: AE, AG, AL, AM, AT, AU, AZ, BA, BB, BG, BR, BY, BZ, CA, CH, CN, CR, CU, CZ, DE, DK, DM, DZ, EE, ES, FI, GB, GD, GE, GH, GM, HR, HU, ID, IL, IN, IS, JP, KE, KG, KP, KR, KZ, LC, LK, LR, LS, LT, LU, LV, MA, MD, MG, MK, MN, MW, MX, MZ, NO, NZ, PL, PT, RO, RU, SD, SE, SG, SI, SK, SL, TJ, TM, TR, TT, TZ, UA, UG, US, UZ, VN, YU, ZA, ZW.

(84) Designated States *(regional)*: ARIPO patent (GH, GM, KE, LS, MW, MZ, SD, SL, SZ, TZ, UG, ZW), Eurasian

[Continued on next page]

(54) Title: SYSTEM AND METHOD FOR ACCESSING AN INTERNET SERVER USING A PORTABLE INFORMATION DEVICE -PDA THROUGH A DATA NETWORK TELEPHONE

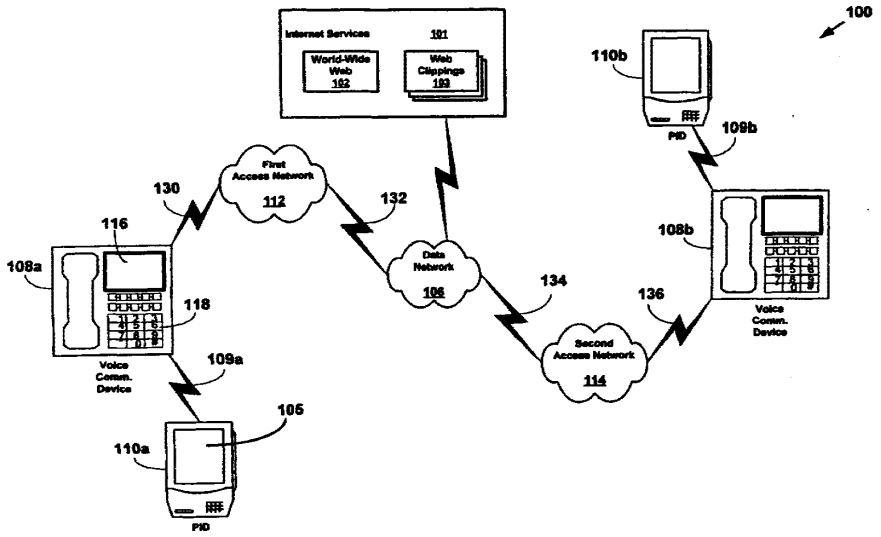

(57) Abstract: A system and method for using a personal information device (PID) to access Internet services over a data network using a telephone. The user may select a hotlink or URL on a display screen on the PID. A communications application transmits the hotlink as PID data to the telephone. The telephone is configured to establish a data communications channel upon receipt of the PID data. The PID data is sent to the Internet services. The Internet Services respond by downloading data associated with the request in the PID data.

WO 01/24500 A1

patent (AM, AZ, BY, KG, KZ, MD, RU, TJ, TM), European patent (AT, BE, CH, CY, DE, DK, ES, FI, FR, GB, GR, IE, IT, LU, MC, NL, PT, SE), OAPI patent (BF, BJ, CF, CG, CI, CM, GA, GN, GW, ML, MR, NE, SN, TD, TG).

Published:

— *With international search report.*

— *Before the expiration of the time limit for amending the claims and to be republished in the event of receipt of amendments.*

For two-letter codes and other abbreviations, refer to the "Guidance Notes on Codes and Abbreviations" appearing at the beginning of each regular issue of the PCT Gazette.

APPLICATION FOR A UNITED STATES PATENT

UNITED STATES PATENT AND TRADEMARK OFFICE

(MBHB Case No. 99,593; 3Com Case No. 2620.S4.US.P)

Title: SYSTEM AND METHOD FOR ACCESSING AN INTERNET SERVER USING A PORTABLE INFORMATION DEVICE -PDA THROUGH A DATA NETWORK TELEPHONE

Bright House Networks - Ex. 1108, Page 539

SYSTEM AND METHOD FOR ACCESSING A NETWORK SERVER USING A PORTABLE INFORMATION DEVICES THROUGH A NETWORK BASED TELECOMMUNICATION SYSTEM

A. Field of the Invention

The present invention relates to a system and method for providing communication services over a network. In particular, the present invention relates to a system and method for providing communication between a portable information devices (PIDs) and a network server through a network connected telecommunication device.

B. Description of the Related Art

For many years, telephone service providers on the Public Switched Telephone Network (PSTN) provided their customers nothing more than a telephone line to use to communicate with other subscribers. Over time, telephone service providers have enhanced their service by providing Custom Local Area Signaling Service (CLASS) features to their customers. Similar communication services are provided by a Private Branch Exchange (PBX), which is typically implemented in a nonresidential setting.

The CLASS features permit customer subscribers of the features to tailor their telephone service according to individual needs. Some of the more well-known CLASS features are:

- Call blocking: The customer may specify one or more numbers from which he or she does not want to receive calls. A blocked caller will hear a rejection message, while the callee will not receive any indication of the call.
- Call return: Returns a call to the most recent caller. If the most recent caller is busy, the returned call may be queued until it can be completed.
- Call trace: Allows a customer to trigger a trace of the number of the most recent caller.
- Caller ID: The caller's number is automatically displayed during the silence period after the first ring. This feature requires the customer's line to be equipped with a device to read and display the out-of-band signal containing the number.

Bright House Networks - Ex. 1108, Page 540

• Caller ID blocking: Allows a caller to block the display of their number in a callee's caller ID device.

• Priority ringing: Allows a customer to specify a list of numbers for which, when the customer is called by one of the numbers, the customer will hear a distinctive ring.

• Call forwarding: A customer may cause incoming calls to be automatically forwarded to another number for a period of time.

A customer subscriber to a CLASS feature may typically activate and/or de-activate a CLASS feature using "*" directives (e.g., *69 to automatically return a call to the most recent caller). CLASS features may also be implemented with the use of out-of-band data. CLASS feature data is typically transmitted between local Class-5 switches using the Signaling System 7 (SS7).

Local Exchange Carriers (LECs) and other similar organizations maintain CLASS offices that typically contain a database entry for each customer. The database allows specification of the CLASS features a customer has subscribed to, as well as information, such as lists of phone numbers, associated with those features. In some cases, customers may edit these lists on-line via a touch-tone interface. A list of all phone numbers that have originated or terminated a call with each customer is often included in the CLASS office database. For each customer, usually only the most recent number on this list is stored by the local Class-5 switch.

A Private Branch Exchange (PBX), is a stored program switch similar to a Class-5 switch. It is usually used within a medium-to-large-sized business for employee telephony service. Since a PBX is typically operated by a single private organization, there exists a wide variety of PBX services and features. Custom configurations are common, such as integration with intercom and voice mail systems. PBX's typically support their own versions of the CLASS features, as well as other features in addition to those of CLASS. Most PBX features are designed to facilitate business and group communications.

A summary of typical PBX features includes:

• Call transfer: An established call may be transferred from one number to another number on the same PBX.

Bright House Networks - Ex. 1108, Page 541

• Call forwarding: In addition to CLASS call forwarding, a PBX number can be programmed to automatically transfer a call to another number when the first number does not answer or is busy.

• Camp-on queuing: Similar to PSTN call return, a call to a busy number can be queued until the callee can accept it. The caller can hang up their phone and the PBX will ring them when the callee answers.

• Conference calling: Two or more parties can be connected to one another by dialing into a conference bridge number.

• Call parking: An established call at one number can be put on hold and then reestablished from another number. This is useful when call transfer is not warranted.

• Executive override: A privileged individual can break into an established call. After a warning tone to the two participants, the call becomes a three-way call.

While the CLASS and PBX features have enhanced the offerings of service providers that use the PSTN, the features are nevertheless limited in their flexibility and scope. The effect to the user is that the features become clumsy and difficult to use. For example, in order to use the Call Forwarding function, the user must perform the steps at the user's own phone prior to moving to the location of the telephone to which calls will be forwarded. A more desirable approach, from the standpoint of usefulness to the user, would be to perform the steps at the telephone to which calls will be forwarded.

Much of the lack of flexibility of the PSTN features is due to the lack of flexibility in the PSTN system itself. One problem with the PSTN is that the terminal devices (e.g. telephones) lack intelligence and operate as "dumb" terminals on a network having the intelligence in central offices. Most PSTN telephones are limited in functional capability to converting the analog signals they receive to sound and converting the sound from the handset to analog signals.

Some PSTN telephones have a display device and a display function to display specific information communicated from intelligent agents in the PSTN network using the PSTN signaling architecture. For example, some PSTN telephones have a display function to enable the Caller ID feature. Even such PSTN telephones are limited however by the closed PSTN signaling architecture, which prohibits access by the PSTN

telephones to the network signaling protocols. The display functions are effectively limited to displaying text, again, as a "dumb" terminal.

The Internet presents a possible solution for distributing intelligence to telephony terminal devices. In Internet telephony, digitized voice is treated as data and transmitted across a digital data network between a telephone calls' participants. One form of Internet telephony uses a telephony gateway/terminal where IP telephony calls are terminated on the network. PSTN telephones are connected by a subscriber line to the gateway/terminal at the local exchange, or at the nearest central office. This form of Internet telephony provides substantial cost savings for users. Because the PSTN portion used in Internet telephony calls is limited to the local lines on each end of the call, long distance calls may be made for essentially the cost of a local call. Notwithstanding the costs savings provided by this form of Internet telephony, it is no more flexible than the PSTN with respect to providing enhancements and features to the basic telephone service.

In another form of Internet telephony, telephones are connected to access networks that access the Internet using a router. The telephones in this form of Internet telephony may be substantially more intelligent than typical PSTN telephones. For example, such a telephone may include substantially the computer resources of a typical personal computer.

It would be desirable to incorporate CLASS and PBX features into a data network telephony system that uses a data network such as the Internet.

It would be desirable to provide new features and enhancements to telephony service that accommodates and conforms to users' needs.

It would also be desirable to provide features and capabilities to telephone service that create new opportunities for users and for service providers.

The present invention addresses the above needs by providing a system in a data network telephony system, such as for example, the Internet, that enables users to connect to Internet services using a personal information device.

Bright House Networks - Ex. 1108, Page 543

BRIEF DESCRIPTION OF THE DRAWINGS

Presently preferred embodiments of the invention are described below in conjunction with the appended drawing figures, wherein like reference numerals refer to like elements in the various figures, and wherein:

FIG. 1 is block diagram of a network telephony system according to one embodiment of the present invention;

FIG. 2 is a block diagram showing a system for using a portable information device (PID) to connect to Internet services on a telephony system according to an exemplary embodiment of the present invention;

FIG. 3 is a block diagram of a data network telephone according to an exemplary embodiment of the present invention;

FIG. 4 is a block diagram of a PID according to an exemplary embodiment of the present invention;

FIG. 5 is a stack layer diagram showing the layers of an IrDA stack;

FIG. 6 is a block and stack layer diagram illustrating an embodiment of the protocol stacks in an exemplary embodiment of a PID linked to a data network telephone;

FIG. 7A is block and stack layer diagram illustrating an embodiment of the present invention in which a connection to an Internet service may be established;

FIG. 7B is a block and stack layer diagram illustrating an alternative embodiment of the present invention in which a connection to an Internet service may be established; and

FIG. 8 is a combined block and pictorial diagram showing advantageous use of a system for providing PID data exchange according to one embodiment of the present invention.

Bright House Networks - Ex. 1108, Page 544

DETAILED DESCRIPTION OF THE PREFERRED EMBODIMENT

The following references to patent applications filed concurrently herewith are incorporated be reference:

* "System and Method for Controlling Telephone Service Using a Wireless Personal Information Device" to Schuster, et al.
* "System and Method for Advertising Using Data Network Telephone Connections" to Schuster, et al.
* "System and Method for Providing User-Configured Telephone Service in a Data Network Telephony System" to Sidhu, et al.
* "System and Method for Interconnecting Portable Information Devices Through a Network Based Telecommunication System" to Schuster, et al.
* "System and Method for Enabling Encryption on a Telephony Network" to Schuster, et al.
* "System and Method for Using a Portable Information Device to Establish a Conference Call on a Telephony Network" to Schuster, et al.
* "System and Method for Associating Notes with a Portable Information Device on a Network Telephony Call" to Schuster, et al.
* "System and Method for Providing Shared Workspace Services Over a Telephony Network" to Schuster, et al.
* "System and Method for Providing Service Provider Configurations for Telephones in a Data Network Telephony System" to Schuster, et al.

The following additional references are also incorporated by reference herein:

* "Multiple ISP Support for Data Over Cable Networks" to Ali Akgun, et al.
* "Method and System for Provisioning Network Addresses in a Data-Over-Cable System" to Ali Akgun, et al., Serial No. 09/218,793.
* "Network Access Methods, Including Direct Wireless to Internet Access" to Yingchun Xu, et al., Serial No. 08/887,313

Bright House Networks - Ex. 1108, Page 545

A. PID-Enabled Data Network Telephony System

FIG. 1 is a block diagram showing an exemplary embodiment of a system 100 for connecting to Internet services according to one embodiment of the present invention. The system includes a data network 106. A first voice communication device 108a linked to a first access network 112 via connection 130 may communicate over the data network 106 by connecting via the first access network 112. A second voice communication device 108b is linked to a second access network 114 through connection 136 and may communicate over the data network 106 by connecting via the second access network 114

The data network 106 in the system 100 typically includes one or more Local Area Networks (LANs) connected to one another or to a Wide-Area Network (WAN), such as an Internet Protocol (IP) network, to provide wide-scale data connectivity. The data network 106 may use Voice Over Packet (VOP) schemes in which voice signals are carried in data packets. The network 106 may also include a connection to the Public Switched Telephone Network (PSTN) to allow for voice connections using traditional circuit switching techniques. In one embodiment, the data network 106 may include one or more LANs such as Ethernet LANs and support data transport protocols for performing Voice-over-Internet-Protocol (VoIP) techniques on the Internet. For further details regarding VoIP, see the information available through the Internet Engineering Task Force (IETF) at www.ietf.org. In addition, an Internet Telephony gateway may be included within the system 100 to allow for voice connections to users connected by subscriber lines at a PSTN Central Office.

The data network 106 may be used to access a variety of Internet services 101. For example, the Internet includes the World-Wide Web102, which is a well-known system for exchanging data over the Internet. The World-Wide Web 102 is commonly used to access targeted information using a computer workstation and an application on the workstation called a browser. With respect to PID's, many Internet Content Providers offer a variety of Web clippings 103 to permit viewing World-Wide Web data on a PID which is smaller than a workstation. One advantage of the system 100 in FIG. 1 is that web clippings 103 and other Internet services 101 may be accessed using the PID 110a,b without having to place a telephone call over the wireless cellular network.

The voice communication devices 108a-b (described further below with reference to FIG. 3) typically include a voice input, a voice output and a voice processing system. The voice processing system converts voice sound to digital data signals that are communicated on a voice connection over the data network. The voice processing system also converts digital data signals received from the voice connection to voice sound. The voice communication devices 108a-b typically include a central processing unit and memory to store and process computer programs. Additionally, each voice communication device 108a-b typically includes a unique network address, such as an IP address, in memory to uniquely identify it to the data network 106 and to permit data packets to be routed to the device.

A first PID 110a linked to the first voice communication device 108a via connection 109a may communicate over the data network 106 by connecting via the first access network 112. A second PID 110b linked to the second voice communication device 108b via connection 109b may communicate over the data network 106 by connecting via the second access network 114. The PIDs 110a-b each contain user attributes stored in a user information data base. The user attributes may contain such information as a user identifier, schedule information, and other information that is associated with a user of the PID 110a or 110b. The PIDS 110a-b each include a user interface allowing a user to easily enter and retrieve data. In a preferred embodiment, the user interface includes a pressure-sensitive display that allows a user to enter input with a stylus or other device. An example of a PID with such an interace is a PDA (Personal Digital Assistant), such as one of the Palm™ series of PDAs offered by 3Com® Corporation. The PIDs 110a-b may include other functionality, such as wireless phone or two-way radio functionality.

Links 109a-b are point-to-point links, and may be entirely or partially wireless, or they may be hard-wired connections. Each of the links 109a-b is preferably a wireless link, such as an infrared link specified by the Infrared Data Association (IrDA) (see irda.org for further information) or a radio frequency (RF) link such as the Bluetooth system (see www.bluetooth.com for further information). However, the point-to-point link can also be a hardwired connection, such as an RS-232 serial port.

In one embodiment, the voice communication device 108a includes a handset with a receiver and transmitter similar or identical to handsets of traditional circuit-switched telephones. A console on which the handset sits may include the voice processing system, a display 116, and a keypad 118.

In a preferred embodiment, a portion of the voice communication device 108a utilizes an NBX 100™ communication system phone offered by 3Com® Corporation. In alternative embodiments, the voice communication device 108a may include any device having voice communications capabilities. For example, a personal computer having a microphone input and speaker output may also be used to implement the voice communication device 108a. Other configurations are also intended to be within the scope of the present invention.

The details relating to operation of the voice communication devices 108a and 108b depend on the nature of the data network 106 and the nature of the access networks 112, 114 connecting the voice communication devices 108a and 108b to each other and/or to other network entities. The access networks 112, 114 typically include any high bandwidth network adapted for data communications, i.e. a network having greater than 64,000 bits-per-second (bps) bandwidth. The access networks 112, 114 may link to the voice communication devices 108a-b using an Ethernet LAN, a token ring LAN, a coaxial cable link (*e.g.* CATV adapted for digital communication), a digital subscriber line (DSL), twisted pair cable, fiberoptic cable, an integrated services digital network (ISDN) link, and wireless links. In embodiments that may not require bandwidth greater than 64,000 bps, the access networks 112, 114 may also include the PSTN and link the voice communications devices 108a-b by an analog modem.

B. System for Connecting to Data Network Services Using a Data Network Telephony System

One advantage of the PID-Enabled Data Network Telephony System 100 in FIG. 1 is that it may be used to provide PID connectivity to the data network 106. In one embodiment, the PIDs 110a are able to connect to data network services through a user interface on the PID 110a. The PID 110a includes a web application for retrieving information that can be communicated from the Internet services 101 over the data network 106, transported across the first access network 112, to the voice communication

Bright House Networks - Ex. 1108, Page 548

device 108a. The PID 110a can receive the information across the link 109a for display on the PID 110ba.

In one embodiment, the PID 110a uses the Point-to-Point Protocol (PPP) to communicate with the voice communications device 108a. The PID 110a communicates requests for services to the voice communications device 108a to send over the data network 106. The PID 110a receives the Internet service offerings (*e.g.* web clippings) from the data network through the voice communication device 108a.

A voice-over-data channel for communicating voice-over-data may or may not concurrently exist with this communication of information over a data channel. In this way, a user of the PID 110a can receive information from the Internet services 101 while voice signals are communicated between the voice communication device 108a and the voice communication device 108b. Alternatively, the user may use the PID 110a connection to the Internet services independently of any telephone calls.

1. Local Area Network As An Exemplary Access Network

FIG. 2 is a block diagram showing one example of the system 100 of FIG. 1 for accessing Internet services 101 using a PID 210a according to the present invention. The system 200 in FIG. 2 includes a local area network 212, connected to a data network 206 by a first router 228. A cable network 214 is connected to the data network 206 by a second router 238. Those of ordinary skill in the art will appreciate that while FIG. 2 illustrates the access networks as the local area network 212 and the cable network 214, any other type of network may be used. For example, the local area network 212 and/or the cable network 214 may be replaced by ISDN, DSL, or any other high-speed data link.

The local area network 212 provides data connectivity to its network elements, such as a first data network telephone 208a, a second data network telephone 208b, and a first network telephony connection server 150. The local area network 212 in FIG. 2 is an Ethernet LAN operating according to the IEEE 802.3 specification, which is incorporated by reference herein, however, any other type of local area network may be used. The local area network 212 uses the router 228 to provide the data network telephone 208a and the first network telephony connection server 150 with access to the data network 206. For example, the router 228 may perform routing functions using

protocol stacks that include the Internet Protocol and other protocols for communicating on the Internet.

The first network telephony connection server 150 provides telephony registration, location and session initiation services for voice connections in which its members are a party. A user may register for telephony service with an administrator of the first network telephony connection server 150 and receive a user identifier and a telephone identifier. The user identifier and telephone identifier may be sequences of unique alphanumeric elements that callers use to direct voice connections to the user. The first network telephony connection server 150 registers users by storing user records in a first registration database 152 in response to registration requests made by the user.

The call setup process and the user and telephone identifiers preferably conform to requirements defined in a call management protocol. The call management protocol is used to permit a caller anywhere on the data network to connect to the user identified by the user identifier in a data network telephone call. A data network telephone call includes a call setup process and a voice exchange process. The call setup process includes steps and message exchanges that a caller and callee perform to establish the telephone call. The actual exchange of voice signals is performed by a data communications channel. The data communications channel incorporates other data transport and data formatting protocols, and preferably includes well-known data communications channels typically established over the Internet.

The call management protocol used in FIG. 2 is the Session Initiation Protocol (SIP), which is described in M. Handley et al., "SIP: Session Initiation Protocol," IETF RFC 2543, Mar. 1999, incorporated by reference herein, however, any other such protocol may be used. Other protocols include H.323, the Media Gateway Control Protocol (MGCP), MEGACO, etc.

The network telephony connection server 150 may be used to provide telephony service for mobile users. A user may be registered to use the first network telephone 208a (which is identified by its telephone identifier), but move to a location near the second network telephone 208b. The user may re-register as the user of the second network telephone 208b. Calls that identify the user by the user's user identifier may reach the user at the second network telephone 208b.

Bright House Networks - Ex. 1108, Page 550

2. Cable Network As An Exemplary Access Network

The system 200 in FIG. 2 also shows a cable network 214 connected to the data network 206 by a router 238. The cable network 214 provides data network access to its network elements, which in FIG. 2 include a third data network telephone 218a and a second network telephony connection server 162. The users of the data network telephone 218a connected to the cable network 214 may communicate over the data network 206 with the users of the data network telephones 208a-b connected to the local area network 212.

The cable network 214 includes any digital cable television system that provides data connectivity. In the cable network 214, data is communicated by radio frequency in a high-frequency coaxial cable. The cable network 214 may include a head-end, or a central termination system that permits management of the cable connections to the users.

3. Providing Telephony Services

The second network telephony connection server 162 is preferably a SIP-based server that performs call initiation, maintenance and teardown for the data network telephone 218a connected to the cable network 214. The second network telephony connection server 162 may be similar or identical to the first network telephony connection server 150 connected to the local area network 212.

The system 200 shown in FIG. 2 permits the data network telephones 208a-b connected to the local area network 212 to communicate with the data network telephone 218a connected to the cable network 214. The system shown in FIG. 2 uses SIP in order to establish, maintain, and teardown telephone calls between users.

There are two major architectural elements to SIP: the user agent (UA) and the network server. The UA resides at the SIP end stations, (e.g. the data network telephones), and contains two parts: a user agent client (UAC), which is responsible for issuing SIP requests, and a user agent server (UAS), which responds to such requests. There are three different network server types: a redirect server, a proxy server, and a registrar. The various network server types may be combined into a single server, such as the network telephony connection server 150 and 162. Not all server types are required to implement the embodiments of the present invention. The communication

services to be provided will determine which servers are present in the communication system. Preferred embodiments of the present invention may be carried out using proxy servers.

One example of a SIP operation involves a SIP UAC issuing a request, a SIP proxy server acting as end-user location discovery agent, and a SIP UAS accepting the call. A successful SIP invitation consists of two requests: INVITE followed by ACK. The INVITE message contains a user identifier to identify the callee, a caller user identifier to identify the caller, and a session description that informs the called party what type of media the caller can accept and where it wishes the media data to be sent. User identifiers in SIP requests are known as SIP addresses. SIP addresses are referred to as SIP Uniform Resource Locators (SIP-URLs), which are of the form *sip:user@host.domain*. Other addressing conventions may also be used.

Redirect servers process an INVITE message by sending back the SIP-URL where the callee is reachable. Proxy servers perform application layer routing of the SIP requests and responses. A proxy server can either be stateful or stateless. A stateful proxy holds information about the call during the entire time the call is up, while a stateless proxy processes a message without saving information contained in the message. Furthermore, proxies can be either forking or non-forking. A forking proxy can, for example, ring several data network telephones at once until somebody takes the call. Registrar servers are used to record the SIP address (the SIP URL) and the associated IP address. The most common use of a registrar server is for the UAC to notify the registrar where a particular SIP URL can be reached for a specified amount of time. When an INVITE request arrives for the SIP URL used in a REGISTER message, the proxy or redirect server forwards the request correctly.

At the local area network 212, the central registrar/proxy server, such as the first network telephony server 150, is the primary destination of all SIP messages trying to establish a connection with users on the local area network 212. Preferably, the first network telephony server 150 is also the only destination advertised to the SIP clients outside the LAN 212 on behalf of all the SIP clients residing on the LAN 212. The network telephony server 150 relays all SIP INVITE messages to the appropriate final

Bright House Networks - Ex. 1108, Page 552

destination (or another SIP proxy), based on a database lookup using the first SIP database 152. It allows all mobile clients to register with their current locations.

Similarly, the second network telephony server 162 is the primary destination of all SIP messages trying to establish a connection with the data network telephone 218a connected to the cable network 214. Preferably, the second network telephony server 162 is also the only destination advertised to the SIP clients outside the cable network 214 on behalf of all the SIP clients (*e.g.* data network telephones) residing on the cable network 214. The second network telephony server 162 relays all SIP INVITE messages to the appropriate final destination (or another SIP proxy), based on a database lookup using the second SIP database 164.

The data network telephones 208a-b and 218a in the system 200 preferably have pre-programmed device identifiers (*e.g.* phone numbers), represented as SIP-URL's that are of the form *sip: user@domain.* An example is *sip: 8475551212@3Com.com.*. After power-up, each of the data network telephones 208a-b and 218a sends a SIP REGISTER message to the default registrar, such as the network telephony servers 150 and 162. When a call arrives at one of the network telephony servers 150 or 162 for any of the registered SIP URLs, the server will forward the call to the appropriate destination. If a data network telephone is moved to a new location, all calls to the associated SIP URL will still be properly routed to that device. In other words, the system in FIG. 2 provides device mobility in the sense that calls will "follow" the data network telephone according to its SIP URL. This is especially useful if the data network telephone 208a-b or 218a is running the DHCP (Dynamic Host Configuration Protocol) so that when the location is changed, the IP address is also automatically changed.

An advantage of the system in FIG. 2 is that once the call is established between data network telephones, the data network 206 provides data connectivity for a plurality of data communications channels. For example, the data network telephones 208a and 218a can communicate voice signals as voice-over-data packets on a voice-over-data channel. The data network telephones 208a and 218a can also communicate data (such as PID data) as data packets on a data channel. For example, the data may be communicated to and from the PIDs 210a and/or 220a across links 209a and 219a to the data network telephones 208a and 218a, where data is packetized and depacketized as

Bright House Networks - Ex. 1108, Page 553

part of the process for communicating the data packets across the data network 206 and any access networks, such as the Ethernet LAN 212 and the cable network 214. The data channels may be established to communicate data to and from the Internet services 101.

4. The Data Network Telephones

The data network telephones 208a-b are preferably telephones that include an Ethernet communications interface for connection to an Ethernet port. The Ethernet phones in FIG. 2 support the Internet Protocol (IP), using an IP address that is either statically configured or obtained by access to a Dynamic Host Configuration Protocol (DHCP) server.

FIG. 3 is a block diagram showing the data network telephone 208a connected to the local area network 212 in FIG. 2. The data network telephone 208a in FIG. 3 is connected to the network 212 by a network interface 270. The network interface 270 may, for example, be a network interface card, and may be in the form of an integrated circuit. A bus 248 may be used to connect the network interface 270 with a processor 240 and a memory 242. Also connected to the processor are user interface circuitry 260 and three alternative link interfaces to a PID, such as the PID 210a.

A first link interface 248 includes an RS-232 serial connection and associated coupling hardware and mechanisms. The first alternative link interface 248 may, for example, be a docking cradle for a PDA (Personal Digital Assistant), in which information can be transferred between the PDA and the data network telephone 208a. The second alternative link interface comprises a first connection 254, such as an RS-232 connection, along with infrared circuitry 250 for converting signals into infrared output and for accepting infrared input. An infrared interface 252 may also be included within the second alternative link interface. The third alternative link interface comprises a first connection 256, such as an RS-232 connection, along with radio-frequency circuitry 258 for converting signals into radio frequency output and for accepting radio frequency input. A radio frequency interface 259 may also be included as part of the third alternative link interface.

The three alternative link interfaces described above are merely examples, and additional means for implementing the link interface between the data network telephone

208a and the PID 210a may also be used. Although three link interfaces are shown in FIG. 3, there may be only one such interface in the data network telephone 208a. More than one link interface may be included to improve flexibility and to provide redundancy in case of failure of one of the link interfaces.

The user interface circuitry 260 includes hardware and software components that access the functions of the handset, display, and keypad to provide user input and output resources for functions in the processor 240. The user interface circuitry includes a display interface 262, a keypad interface 264, an audio output interface 265, and an audio input interface 267.

The audio input interface 267 may receive voice signals from a microphone or other audio input device and convert the signals to digital voice information. The conversion preferably conforms to the G.711 *ITU Standard*. Further processing of the digital signal may be performed in the audio input interface 267, such as providing compression (*e.g.* using G.723.1 standard) or providing noise reduction, although such processing may also be performed in the processor 240. Alternatively, the audio input interface 267 may communicate an analog voice signal to the processor 240 for conversion to digital information within the processor 240.

The audio output interface 265 receives digital information representing voice from the processor 240 and converts the information to audible sound, such as through a magnetic speaker. In one embodiment, the audio output interface 265 receives information in the form of G.711, although other processing such as decompression may be performed in the audio output interface 265. Alternatively, the processor 240 may convert digital information to analog voice signals and communicate the analog voice signals to the audio output interface 265.

The keypad interface 264 and the display interface 262 include well-known device interfaces and respective signal processing techniques. The user interface circuitry 260 may support other hardware and software interfaces. For example, a videophone implementation might also include a camera and monitor. The data network telephones of the present invention are not limited to telephones or videophones – additional user interface types, for example, such as the ones needed for computer games, are also contemplated as being within the scope of the present invention. In addition, some of the

Bright House Networks - Ex. 1108, Page 555

features described here, such as the display interface 262, are optional and serve to enhance the functionality of the first data network telephone 208a.

The processor 240 may consist of one or more smaller processing units, including, for example, a programmable digital signal processing engine. In the preferred embodiment, the processor is implemented as a single ASIC (Application Specific Integrated Circuit) to improve speed and to economize space. The processor 240 also may include an operating system, and application and communications software to implement the functions of the data network telephone 208a. The operating system may be any suitable commercially available embedded or disk-based operating system, or any proprietary operating system.

The processor 240 includes a media engine 241 and a signaling stack 243 to perform the primary communications and application functions of the data network telephone 208a. The purpose of the signaling stack in the exemplary data network telephone 208a is to set up, manage, and tear down a call. During the setup phase, a user may use the keypad to enter a user identifier to call. Alternatively, a PID such as PID 210a may transmit the user identifier of the party across the first link 209a. The signaling stack 243 receives the user entry and formats a request message to send to the user identified by the user identifier to initiate a telephone call. When the request message is sent, the location of the user identified by the user identifier is discovered, communication parameters, such as the supported voice CODEC types are exchanged, and a voice-over-data channel is established. During the management phase, for example, other parties may be invited to the call if needed. During the tear down phase, the call is terminated.

The signaling protocol used in the data network telephone 208a in FIG. 3 is the SIP protocol. In particular, the signaling stack implements a User Agent Client 244 and a User Agent Server 242, in accordance with the SIP protocol. Alternative signaling protocols, such as the ITU-T H.323 protocol, MGCP, MEGACO, and others, may also be used to implement the present invention.

Once the call is set up, the media engine 241 manages the communication over one or more data communications channels using network transport protocols and the network interface 270. The media engine 241 sends and receives data packets having a

data payload for carrying data and an indication of the type of data is being transported. The media engine 241 in the data network telephones 208a may sample the voice signals from the audio input 267 (or receive voice samples from the audio input 267), encode the samples, and build data packets on the sending side. On the receiver side, in addition to performing the reverse operations, the media engine also typically manages a receiver buffer to compensate for network jitter. Similar procedures may be performed for other types of data, such as graphical data, or for data used in PID applications such as email, contacts data, calendar data, other non-voice sound data, interactive game data, etc.

The media engine 241 may also include hardware and software components for performing registration functions 247, voice-over-data functions 249, display data functions 251, and keypad output functions 253. The media engine 241 processes data that is received from the network 212, and data to be sent over the network 241.

For data that is received from the network 212, the media engine 241 may determine from the type of data in the packet (such as by examining a packet header) whether packets contain sampled voice signals or other data types. Packets containing sampled voice signals are processed by the voice-over-data function 249. The voice-over-data function 249 preferably conforms to a protocol for formatting voice signals as digital data streams. While any suitable protocol may be used, the media (i.e. the voice signal) is preferably transported via the Real Time Protocol (RTP), which itself is carried inside of UDP (User Datagram Protocol). RTP is described in H. Schulzrinne et al., "RTP: A Transport Protocol for Real-Time Applications," IETF RFC 1889, Jan. 1996, which is incorporated herein by reference. UDP is described in J. Postel, "User Datagram Protocol," IETF RFC 768, Aug. 1980, and IP is described in J. Postel, ed., "Internet Protocol," IETF RFC 791, Sept. 1981, both of which are incorporated by reference herein.

Packets containing data for use in registering the data network telephone 208a with a network telephony service are processed by the registration function 247. By registering the data network telephone 208a, a user may establish with the network telephony connection server 150 that calls addressed to the user's user identifier may be connected to the data network telephone 208a. Registration may occur when the data network telephone 208a sends a request to register to a service provider host, such as the

Bright House Networks - Ex. 1108, Page 557

network telephony connection server 150. The service provider host may respond by setting the user's user identifier to correspond to the telephone identifier of the data network telephone 208a, and by acknowledging the request with a status message to the data network telephone 208a. In one embodiment, a request to register the data network telephone 208a to a default user is automatically sent during power-up of the data network telephone 208a.

Other features may be added to the registration functions 247, or implemented as extensions to the registration functions 247. For example, the first data network telephone 208a may be provisioned to provide selected network telephony services by establishing a data connection with a service provider, requesting the selected services, and receiving data that ensures that the services have been successfully provisioned. Such services may include, for example, caller identification, call forwarding, voice mail and any other services offered by the network telephony service provider to enhance the capabilities of the first data network telephone 208a. One advantage of provisioning functions is that services may be ordered for temporary use in a manner convenient to the user.

Packets containing data for display on a display device of the data network telephone 208a are processed by the display data function 251. The display data function 251 may be used for displaying, for example, the names and user identifiers of other parties to the call, the status of the telephone call, billing information, and other information.

For data to be sent over the data network 212, the media engine 241 formats the data as data packets in accordance with a selected protocol. The selected protocol is preferably a protocol that is supported by data network telephones that will receive the data being transported. The media engine 241 may include a data connection application 245 to perform functions relating to data connections over the data network 206. The data network telephone 208 may include a data connection management protocol (*e.g.* the hypertext transport protocol, or http) to handle data connections. Alternatively, the SIP protocol may be used to establish data connections as well as voice connections. The data connection application 245 may also perform proxy services to permit the PID 108 to establish data connections.

Bright House Networks - Ex. 1108, Page 558

The voice-over-data function 249 formats voice samples according to the protocol used by the receiving data network telephone. In one preferred embodiment, the voice over data function 249 formats voice samples as RTP packets. The registration function 247 and the keypad output function 253 may control the transport of data that does not represent voice signals.

The data network telephones 208b and 218a are preferably similar or identical to the data network telephone 208a. For each of the data network telephones 208a-b and 218a, many of the features described in FIG. 3 are optional and their inclusion depends on the services to be offered.

5. The Portable Information Devices (PIDs)

FIG. 4 is a block diagram showing the exemplary PID 210a that can communicate via the link 209a with the data network telephone 208a connected to the LAN 212. The PID 210a may be linked to the data network telephone 208a through a link interface 545. A bus 580 may be used to connect the point-to-point interface 545 with a processor 540, a memory 542, data storage 543, and user interface circuitry 544.

The link interface 545 shown in FIG. 4 illustrates three alternative link interfaces for establishing a link to a data network telephone, such as the data network telephone 208a.

A first link interface 546 includes an RS-232 serial connection and associated coupling hardware mechanisms. The first alternative link interface 546 may, for example, be for coupling with a PDA docking cradle, in which information can be transferred between the PDA and the data network telephone 208a. The second alternative link interface comprises a first connection 548, such as an RS-232 serial connection, along with infrared circuitry 250 for converting signals into infrared output and for accepting infrared input. An infrared interface 552 may also be included within the second alternative link interface. The third alternative link interface comprises a first connection 554, such as an RS-232 connection, along with radio-frequency circuitry 556 for converting signals into radio frequency output and for accepting radio frequency input. A radio frequency interface 558 may also be included as part of the third

Bright House Networks - Ex. 1108, Page 559

alternative interface. The radio interface 554/556/558 may be implemented according to the Bluetooth specifications, described at www.bluetooth.com.

The three alternative link interfaces described above are merely exemplary, and additional means for implementing the interface between the PID 210a and the data network telephone 208a may also be utilized. Although three link interfaces are shown in FIG. 4, there may be only one such interface in the PID 210a. More than one link interface may be included to improve flexibility and to provide redundancy in case of failure of one of the link interfaces.

The user interface circuitry 544 includes hardware and software components that provide user input and output resources for functions in the processor 540. The user interface circuitry includes a display output 562, a display input 565, and an additional input/output interface 567.

The display output 562 preferably receives digital information representing graphical data from the processor 540 and converts the information to a graphical display, such as text and/or images, for display on a display screen, for example.

The display input 565 may receive data inputs, such as graphical data inputs, from a user of the PID 210a. The graphical data inputs are preferably entered by the user with a stylus on a pressure-sensitive display screen, and may include text, drawings, or other objects that are capable of being graphically presented.

The additional input/output interface 567 allows the user to enter other types of data besides graphical data into the PID 210a. For example, audio data, additional graphical data, or additional input, such as video camera input for example, may be entered through the additional input/output interface 567. The data may also include data formatted for operation with particular applications on the PID. For example, email data, calendar data, contacts data, database data, spreadsheets, notes, game data, etc. may also be entered. Touch-sensitive screen buttons are an exemplary method for a user to enter control data into the PID 210a.

The processor 540 may include an operating system, as well as application and communication software, to implement the functions of the PID 210a. The operating system may be any suitable commercially available operating system, or any proprietary operating system. The operating system and software may be stored on data storage 543,

Bright House Networks - Ex. 1108, Page 560

in the memory 542, or the may be embedded in the processor 540. Although the processor 540 is shown connected to the data storage 543 through a bus 580, other configurations may also be used. Similarly, the memory 542 may be configured other than as shown in FIG. 4, and may be embedded within the processor 540.

The PID 210a is able to send data to and receive data from the data network telephone 208a across a point-to-point link, such as the point-to-point link 209a shown in FIG. 1. A user enters PID data at the display input 565. The graphical data may be processed in the user interface circuitry 544 or it may go directly to the processor 540 or the memory 542. The processor 540 may also perform processing functions, such as compression.

A PID data application may be used to perform functions that may implement the display input, the display output, and the processing functions. For example, a web clippings application 575 may be used to request and receive information from Internet services 101 (shown in FIG. 2) in a format suitable for the PID 210. The information, or clippings are provided by the Internet services 101. The information retrieved as clippings could then be displayed through the display output 562 to enable the user to see a visual representation of the information.

If the user desires to request information from web clippings 103, a periodic request may be set up to make a request at a designated time as long as a link interface to the data network telephone 208 is active. Alternatively, the user may store links (*e.g.* hot links) and select the hotlinks using the stylus or other user input to request specific information at anytime. The request can be transmitted through one of the point-to-point interfaces 545, allowing the data to be received by the data network telephone 208a. An application in the data network telephone 208a receives the request across the point-to-point link, and the request is prepared for transmission across the data network 206, such as by the media engine 241 shown in FIG. 3. Preferably the request is converted to data packets and is communicated on a data channel across the LAN 212 through the router 228 across the data network 206 to the selected web clipping 103.

The web clipping 103 processes the request using well-known techniques (*e.g.* http). The requested information is formatted as data packets, preferably in the form of TCP/IP data packets to the data network telephone 208a. The data network telephone

Bright House Networks - Ex. 1108, Page 561

208a may recognize the data packets as related to the previously made request and simply pass the information to the PID 210, or process the data packets.

The link 209a between PID 210a and the first data network telephone 208a can alternatively be implemented as an infrared link using all or parts of a specialized protocol, such as the Infrared Data Association (IrDA) protocol stack, where data is interpreted through the stack between application-layer processes at each end of the link.

FIG. 5 is a protocol diagram illustrating the layers of the IrDA protocol stack. An IrDA stack is implemented at each of the connection endpoints of an IrDA link. For example, the first PID 210a and the first data network telephone 208a could each implement an IrDA protocol stack to enable the link 209a. As a second alternative, two PIDs, such as the first PID 210a and the third PID 218a, may each contain an IrDA stack. In the second alternative, the communications between the PIDs and the data network telephones might take place without the assistance of IrDA. For example, IrDa data from the first PID 210a might be transmitted across the link 209a as a serial stream of data to the first data network telephone 208a, which might treat the IrDA data like any other data received from the first PID 210a. The first data network telephone 208a could then assemble the IrDA data into packets, such as TCP/IP packets for transport across the access and data networks to the third data network telephone 218a. The third data network telephone 218a may disassemble the packets and forward the IrDA data (without interpreting the IrDA portions) across the link 219a to the third PID 220a. The third PID 220a could then process the IrDA information received across the networks.

The required layers of an IrDA protocol stack are the physical layer 602, the IrLAP layer 604, the IRLMP layer 606 and the IAS layer 608. The physical layer 602 specifies optical characteristics of the link, encoding of data, and framing for various speeds. The IrLAP (Link Access Protocol) layer 604 establishes the basic reliable connection between the two ends of the link. The IrLMP (Link Management Protocol) layer 606 multiplexes services and applications on the IrLAP connection. The IAS (Information Access Service) layer 608 provides a directory or "yellow pages" of services on an IrDA device.

The IrDA protocol also specifies a number of optional protocol layers, these protocol layers being TinyTP 610, IrOBEX 612, IrCOMM 614 and IrLAN 616. TinyTP

(Tiny Transport Protocol) 610 adds per-channel flow control to keep traffic over the IrDA link moving smoothly. This important function is required in many cases. IrOBEX (Infrared Object Exchange protocol) 612 provides for the easy transfer of files and other data objects between the IrDA devices at each end of the link. IrCOMM 614 is a serial and parallel port emulation that enables existing applications that use serial and parallel communications to use IrDA without change. IrLAN (Infrared Local Area Network) 616 enables walk-up infrared LAN access for laptops and other devices. The use of the optional layers depends upon the particular application in the IrDA device. The IrDA protocol stack is defined by such standards documents as "IrDA Serial Infrared Physical Layer Link Specification", "IrDA 'IrCOMM': Serial and Parallel Port Emulation over IR (Wire Replacement)", "IrDA Serial Infrared Link Access Protocol (IrLAP)", "IrDA Infrared Link Management Protocol (IrLMP)", and "IrDA 'Tiny TP': A Flow-Control Mechanism for use with IrLMP", and related specifications published by the IrDA and available at http://www.irda.org/standards/specifications.asp and is incorporated by reference herein.

The IrDA protocol stack can be implemented at just the PID devices at the endpoints with the intermediate phones and networks simply providing a tunnel for the media stream attendant to the infrared links. Since PIDs, such as the Palm PDA, already have an IrDA stack implemented in them to support their infrared link to other devices and the benefits of the IrDA stack are already available. By using the layers of the IrDA protocol stack, the PID applications and the base applications in the phones can be simplified as the IrDA protocol layers take over certain functionalities. For example, the IrOBEX layer in each IrDA protocol stack can be used to transfer text and graphics object files, such as electronic business cards or whiteboard graphics, end-to-end between PID devices connected via data connected data network telephones..

With the IrDA stack being implemented only in the PIDs and not in the phones, only a small level of delay is introduced for stack interpretation by each PID and the connection provided is largely transparent to the applications in the PID devices, i.e. little or no modification to existing user applications in the PIDs is required. This approach may be more suitable for delay sensitive applications, such as interactive games involving the transfer of data between user applications in each PID.

Bright House Networks - Ex. 1108, Page 563

It should be noted that the IrDA stack is written for a single infrared point-to-point interface and not for an infrared-to-network-to-infrared interface. As a result, the timers and retransmission schemes implemented in view of the single infrared point-to-point interface may not function properly for the extended network interface.

Alternatively, IrDA stacks can be implemented in the phones as well. By implementing IrDA stacks in the phones, the timing of the infrared interface is unaffected by a network delay. Also, additional functions and features can be implemented in the phones. For example, the phones can implement challenge and authentication where the phone requires the user, through the PID, to enter a password or other information to authenticate an authorized user. Similarly, the PID may also be used to transmit commands to the phone and receive status information via the IrDA stack. The approach taken will depend upon the requirements of the design and the particular application.

6. Providing Telephony and Access to Internet Services

FIG. 6 is a functional block diagram and protocol stack diagram illustrating an embodiment of the protocol stacks in the first PID 210a and the first data network telephone 208a that support link 209a. In the infrared RS-232 embodiment, the link interface circuitry 545 in the first PID 210a provides the physical layer 656, such as that specified by the Infrared Data Association (IrDA), that connects via link 209a to the link interface circuitry 260 implementing a physical layer 664 in the first data network telephone 208a. The data link layer 654 in the first PID 210a provides data link control for link 209a in transferring data to and from a PID application client 652. Similarly, the first data network telephone 208a includes a data link layer 662 and a base application server 600 that is configured to synchronize connection and other functions with the PID application 652 in the first PID 210a.

When PID 210a is activated, either through power-up or through a user input at the user interface 650, the synchronization application client 652 in the PID 210a may send the user's SIP URL across the link 209a to the first data network telephone 208a, where it is received by the synchronization application server 600. The synchronization application server 600 sends the SIP URL received from the PID 210a across connection 230 and the Ethernet LAN 212 through connection 243 to the network telephony

Bright House Networks - Ex. 1108, Page 564

connection server 150. The network telephony connection server 150 may store the SIP URL and the IP address of the associated data network telephone 208a in the SIP database 152 so that the SIP URL is listed as being resident at the IP address of the data network telephone 208a. (If the network telephony connection server 150 uses a location server for registration/location tasks, the registration information might instead be stored with such a location server). SQL (Structured Query Language) is preferred for querying the database. Once the PID 210a is registered with the network telephony connection server 150, calls to the SIP URL for PID 210a (or the user of the PID 210a) will be directed to the data network telephone 208a.

FIG. 7A is a functional block and protocol stack diagram illustrating an embodiment of the present invention where a SIP connection is established from the first data network phone 208a to the third data network phone 218a through network connection 230, first access network 212, data network 206, second access network 214 and network connection 236. The routers 228 and 238, and associated connections 232a-b and 234a-b, are not shown to simplify the block diagram representation.

The diagram of FIG. 7A shows how requests for Internet services can be transmitted and responses to the requests processed in one aspect of the present invention. The PID application 652 in PID 210a is configured to send PID data as input, which in the present context is a request for data, such as a hotlink, or an URL. The request is sent through the user interface 650 through link 209a to base application 660 in the first data network phone 208a. In this embodiment, base application 660 is configured to define data channels for transport to the Internet services 101. The Internet services 101 responds to the request by sending back requested services to the PID 110a. For example, the Internet services may send back data from web clippings 686 to the PID 110a as PID data.

Multiple data channels in SIP may be defined through the Session Description Protocol described in RFC 2327, herein incorporated by reference. Included in a SIP INVITE request for a connection are options for the requested connection that describe the number and type of media streams. Each media stream is described by a "m=" line in the INVITE request. For example, a request for a connection that includes an audio stream and a bidirectional video stream using H.261 might look like this:

Bright House Networks - Ex. 1108, Page 565

```
v=0
o=alice 2890844526 2890844526 IN IP4 host.anywhere.com
c=IN IP4 host.anywhere.com
m=audio 49170 RTP/AVP 0
a=rtpmap:0 PCMU/8000
m=video 51372 RTP/AVP 31
a=rtpmap:31 H261/90000
```

TABLE 1.

If the called device includes functionality to receive the connection as described in Table 1, then the called device will respond to the INVITE request with a 200 OK response that includes the same option values. If the called device or party is unable or unwilling to receive such a connection, then it will respond with alternative option values for the connection. See RFC 2543 for further details regarding the negotiation of connection parameters in SIP.

In FIG. 7A, a first data channel for voice data has been negotiated by the base applications 660 in the first data network telephone 208a and the base application 674 in the second data network telephone 218a. In addition, a second data channel for Internet services data has been negotiated by the base application 660 in the first data network telephone 208a and web clippings application 686 in the Internet services 101.

The base applications 660 and 674 transfer voice data between the AUDIO applications, such as applications including G.711 encoders, in each phone via the first data channel. The base application 660 in phone 208a is also configured to send data requests received via link 209a from PID 210a to the Internet services 101 via the second data channel. The Internet services 101 processes the request and provides the requested information over the second data channel.

One advantage of the embodiment in FIG. 7A is that the voice channel is optional. The users may request the data connection to the Internet services 101 while conversing on the phones 208. Alternatively, a user may connect to the Internet services 101 independent of any voice connection.

Bright House Networks - Ex. 1108, Page 566

FIG. 7B shows an alternative embodiment for providing a data connection from the PID 110a to the Internet services 101. The link 209a in FIG. 7B is an RS232 connection. The PID 110a includes an IP stack that includes a Point-To-Point client 653. In addition, the telephone 208a includes a PPP server 663. The PID 110a may connect directly to the Internet services 101 with its own IP address. One advantage of using the PPP-based connection in FIG. 7B is that even a basic, low-cost PID 110a may perform sophisticated Internet communications because the PPP is widely available at a low cost.

C. Accessing Internet Services Concurrent with Voice Services

FIG. 8 shows an exemplary embodiment of the present invention for transmitting data from an Internet service concurrently with voice services during a telephone conversation. The PID 210a includes a display screen 702, a stylus 700 that a user can use to select a hotlink, or URL address to a Web service. Alternatively, a SYNC button 718 may be used to initiate a series of requests to the Internet services 101.

The display screen 702 is shown as a pressure-sensitive display screen in which the stylus 700 can be used to enter PID data 714 into the first PID 210a. In the example shown in FIG. 8, the PID 210a includes hotlink 706 for accessing prices of selected stocks from the Internet services 101. The stylus is being used to select the hotlink 706 the stock prices.

In the embodiment shown in FIG. 8, the hotlink 706 is transmitted across the link 209a to the first data network telephone 208a. When the first data network telephone 208a receives the transmitted hotlink 714, an application within the first data network telephone 208a will place the hotlink 714 into PID data packets for transmission to the Internet services 101 across the access and data networks 212, 206 (and any associated connections and routers). The Internet services then processes the hotlink 714 and responds by sending the requested stock prices in the PID data channel 724 back to the data network telephone 208. The data network telephone 208 transmits the information to the PID 208 for display on the PID display 702.

While the invention has been described in conjunction with presently preferred embodiments of the invention, persons of skill in the art will appreciate that variations may be made without departure from the scope and spirit of the invention. For example,

the access networks shown in FIG. 2 may comprise any other suitable type of local area network or service infrastructure.

In addition, protocols of various types are referenced throughout. While preferred and alternative embodiments may implement selected protocols, any suitable replacement protocol not mentioned, or any function not part of a protocol used to replace a corresponding function from a protocol may be implemented without departing from the scope of the invention.

This true scope and spirit is defined by the appended claims, interpreted in light of the foregoing.

Bright House Networks - Ex. 1108, Page 568

WE CLAIM:

1. A system for accessing Internet services on a data network telephony system comprising:

a data network to provide data connectivity for a plurality of data communications channels using data transport protocols;

at least one Internet service connected to the data network;

a data network telephone connected to the data network, the data network telephone operable to communicate a voice signal as voice-over-data packets on a voice-over-data channel, the voice over data channel being one of the plurality of data communications channels on the data network, the data network telephone operable to convert voice-over-data packets communicated on the voice-over-data channel to voice signals; and

a portable information device comprising a first graphical user interface and a first data network telephone interface, the first graphical user interface operable to accept and display information from the Internet service, the first data network telephone interface operable to communicate at least one request for Internet services to and from the first data network telephone.

Bright House Networks - Ex. 1108, Page 569

FIG. 1

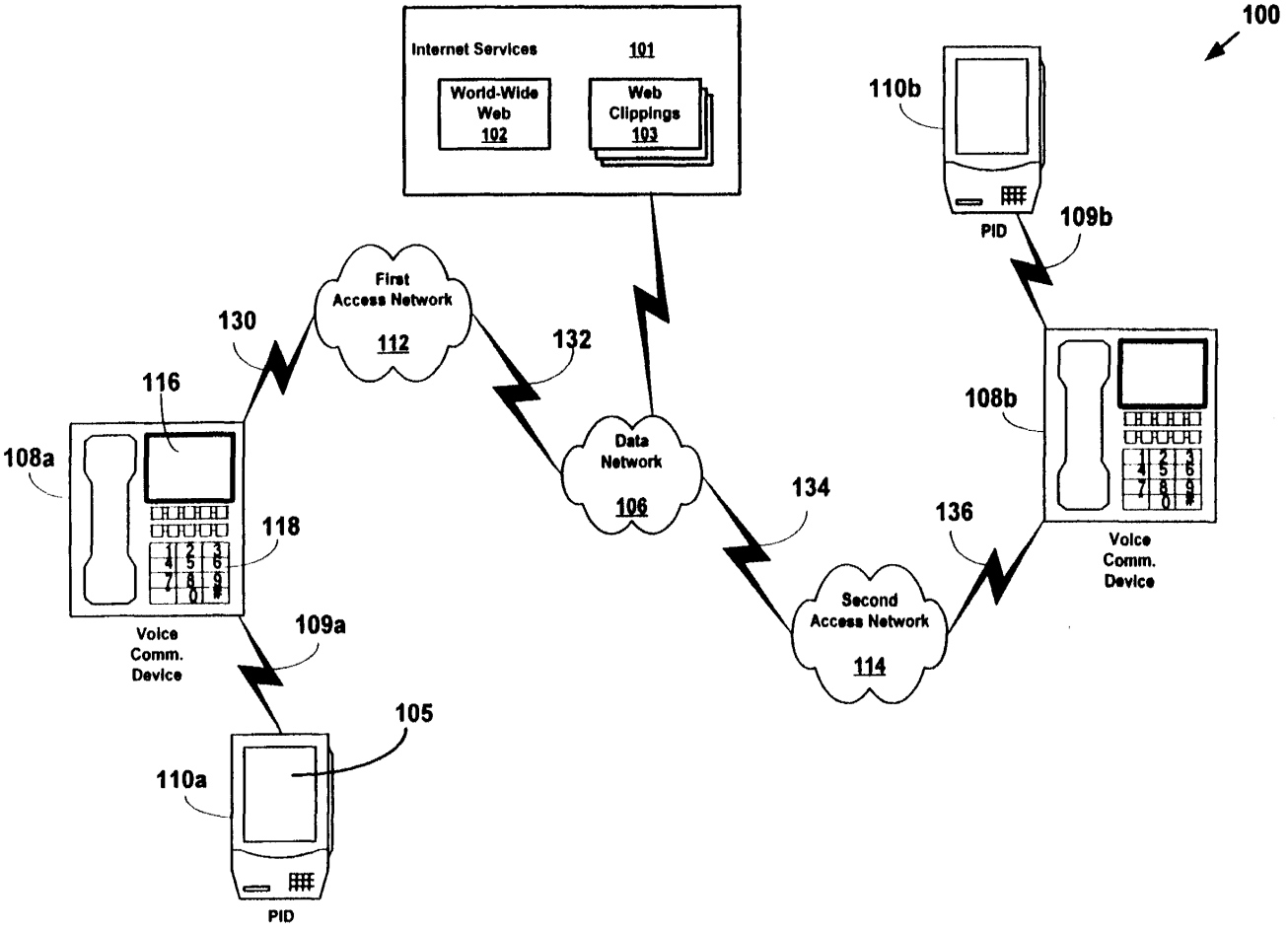
100
Internet Services
101
World-Wide Web
102
Web Clippings
103
110b
PID
109b
First Access Network
112
130
132
116
108a
Data Network
106
134
108b
118
136
Voice Comm. Device
Second Access Network
114
Voice Comm. Device
109a
105
110a
PID

FIG. 2

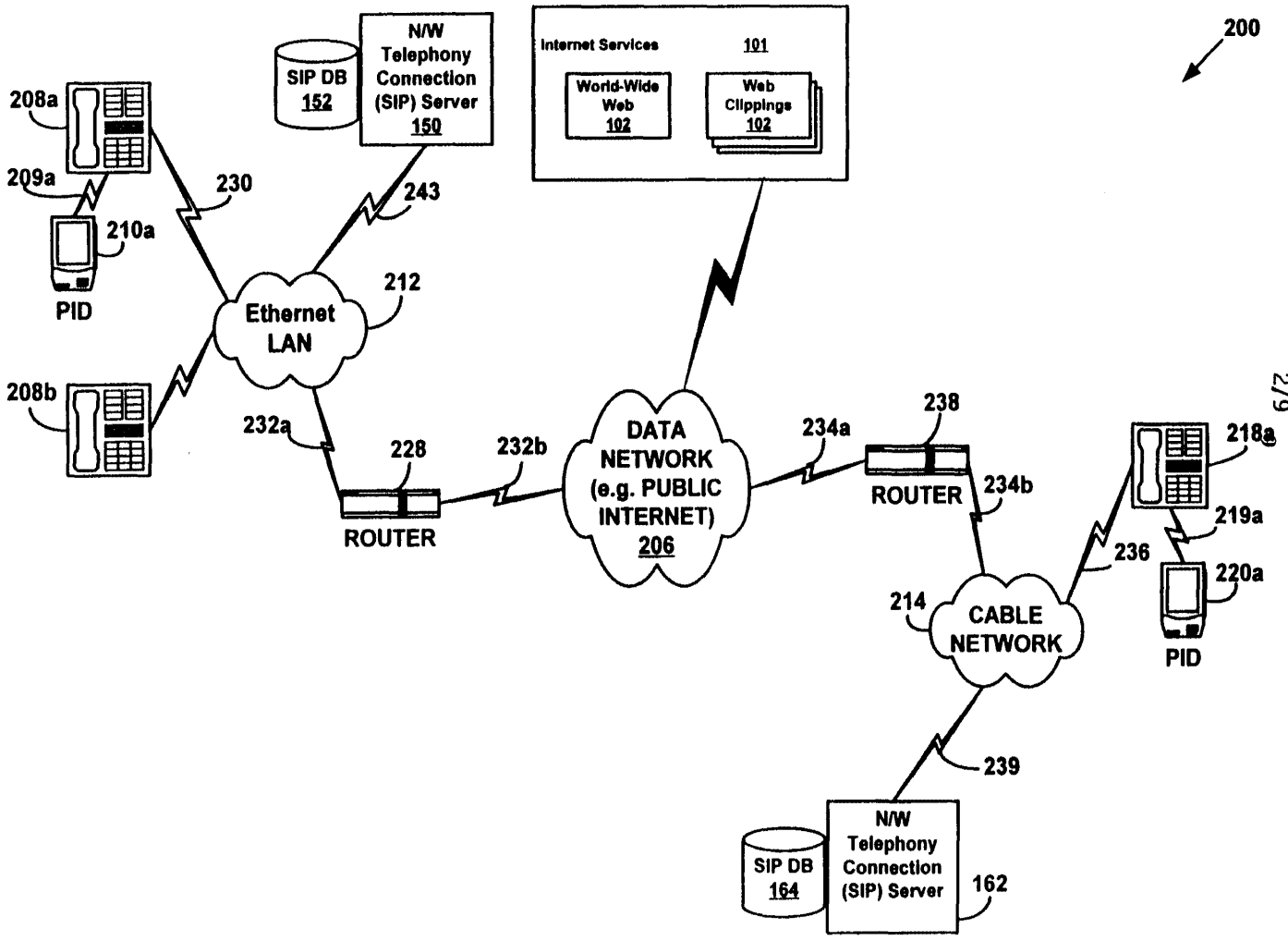
200
Internet Services
101
World-Wide Web
102
Web Clippings
102
N/W Telephony Connection (SIP) Server
150
SIP DB
152
208a
209a
210a
PID
230
243
212
Ethernet LAN
208b
232a
228
ROUTER
232b
DATA NETWORK (e.g. PUBLIC INTERNET)
206
234a
238
ROUTER
234b
218a
219a
220a
PID
236
214
CABLE NETWORK
239
N/W Telephony Connection (SIP) Server
162
SIP DB
164

FIG. 3

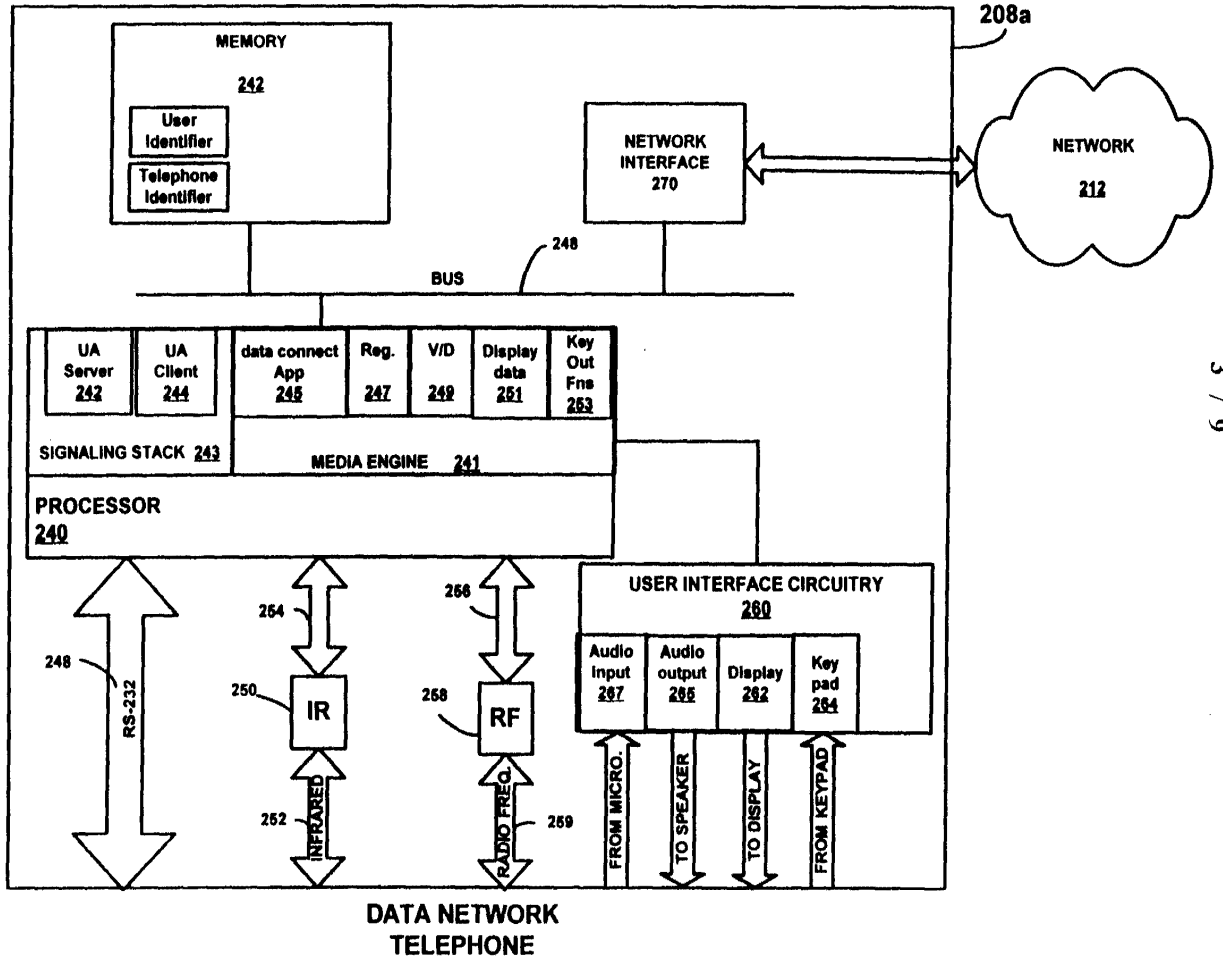
208a
MEMORY
242
User Identifier
Telephone Identifier
NETWORK INTERFACE 270
NETWORK 212
248
BUS
UA Server 242
UA Client 244
data connect App 245
Reg. 247
V/D 249
Display data 251
Key Out Fns 253
SIGNALING STACK 243
MEDIA ENGINE 241
PROCESSOR 240
USER INTERFACE CIRCUITRY 260
Audio input 267
Audio output 266
Display 262
Key pad 264
254
256
250
IR
258
RF
248
RS-232
252
INFRARED
RADIO FREQ.
269
FROM MICRO.
TO SPEAKER
TO DISPLAY
FROM KEYPAD
DATA NETWORK TELEPHONE

FIG. 4

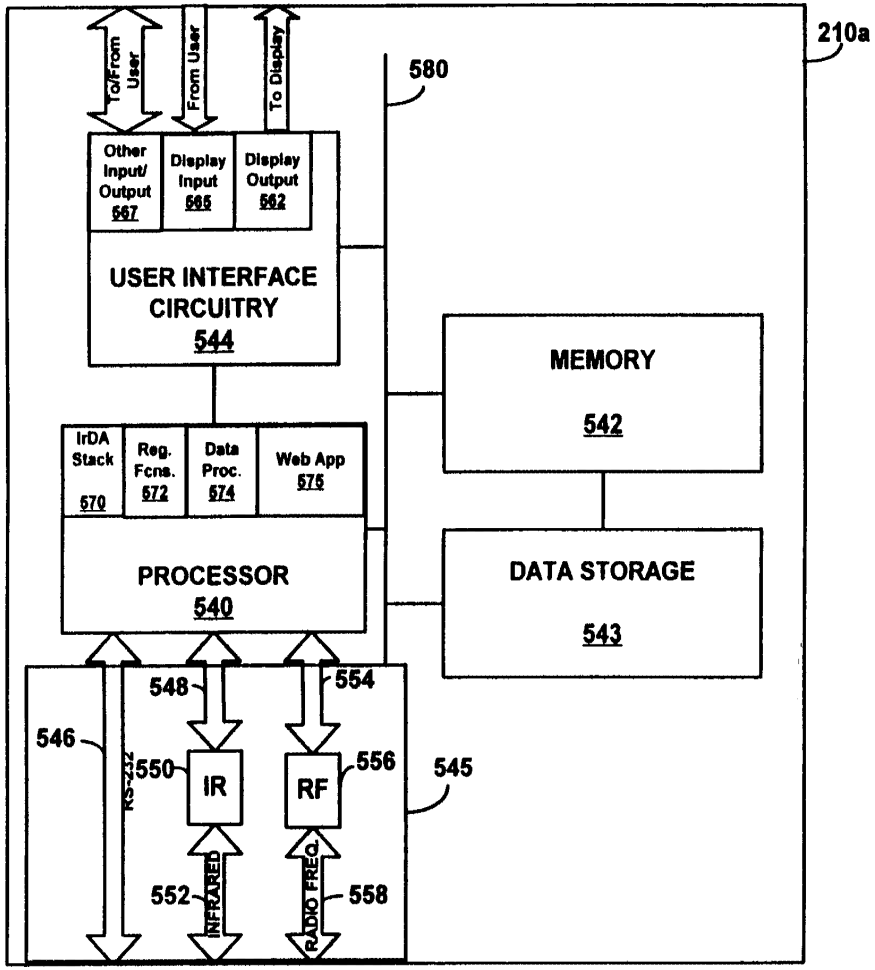
210a
580
To/From User
From User
To Display
Other Input/ Output 567
Display Input 565
Display Output 562
USER INTERFACE CIRCUITRY 544
MEMORY 542
IrDA Stack 570
Reg. Fcns. 572
Data Proc. 574
Web App 575
PROCESSOR 540
DATA STORAGE 543
548
554
546
550
IR
RF
556
545
RS-232
552
INFRARED
RADIO FREQ.
558

PID

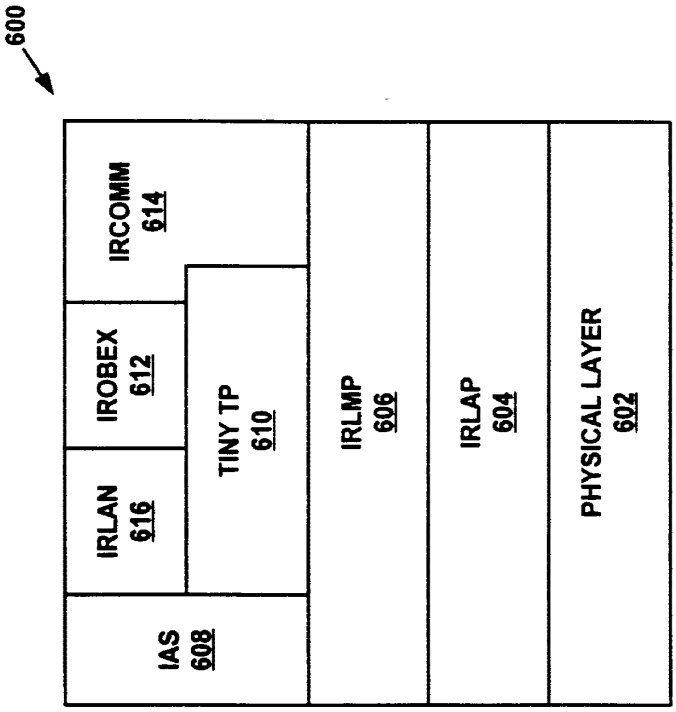
600
IAS 608
IRLAN 616
IROBEX 612
IRCOMM 614
TINY TP 610
IRLMP 606
IRLAP 604
PHYSICAL LAYER 602

FIG. 5

FIG. 6

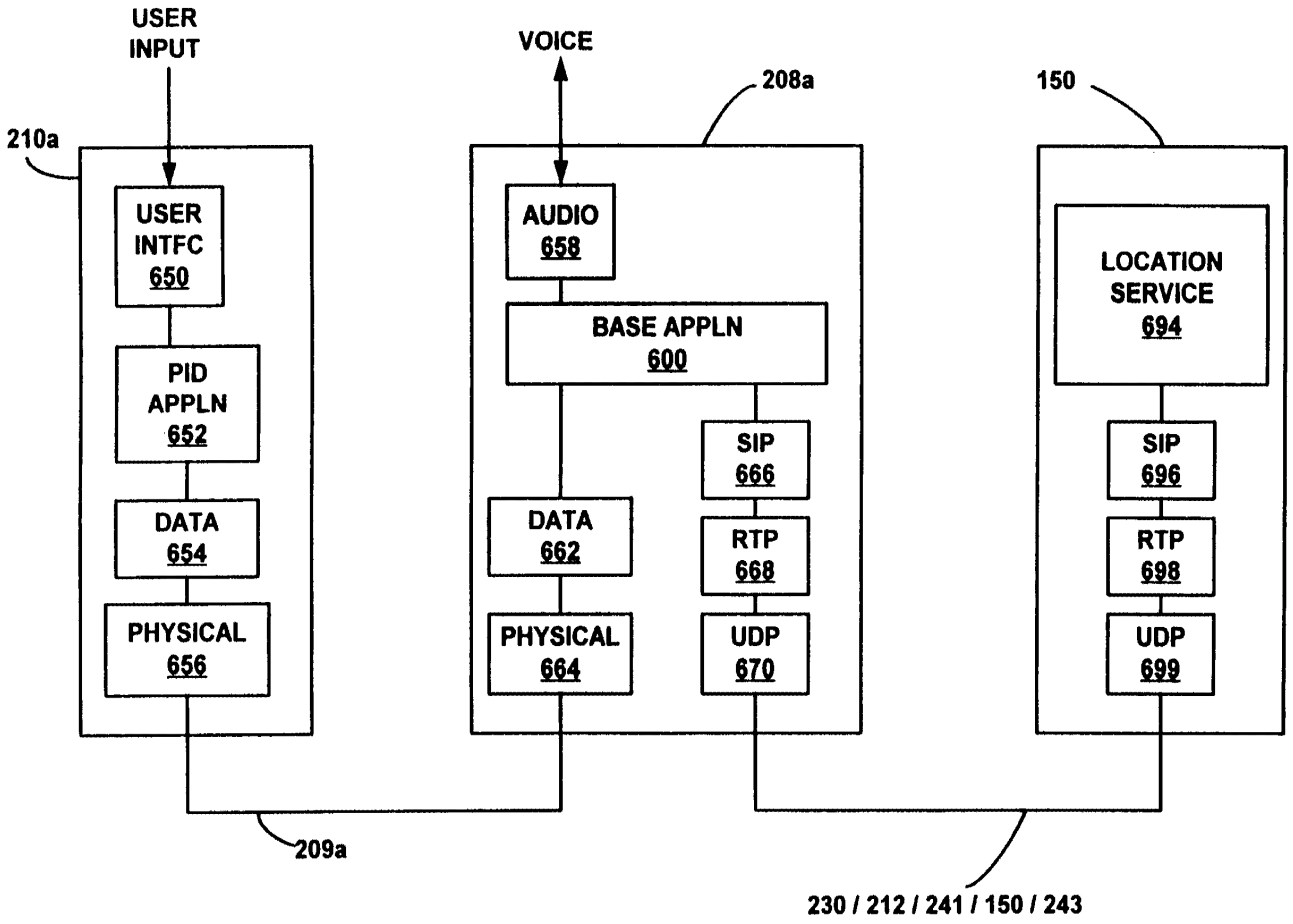
USER INPUT
VOICE
208a
150
210a
USER INTFC 650
AUDIO 658
LOCATION SERVICE 694
BASE APPLN 600
PID APPLN 652
SIP 666
SIP 696
DATA 654
DATA 662
RTP 668
RTP 698
PHYSICAL 656
PHYSICAL 664
UDP 670
UDP 699
209a
230 / 212 / 241 / 150 / 243

FIG. 7A

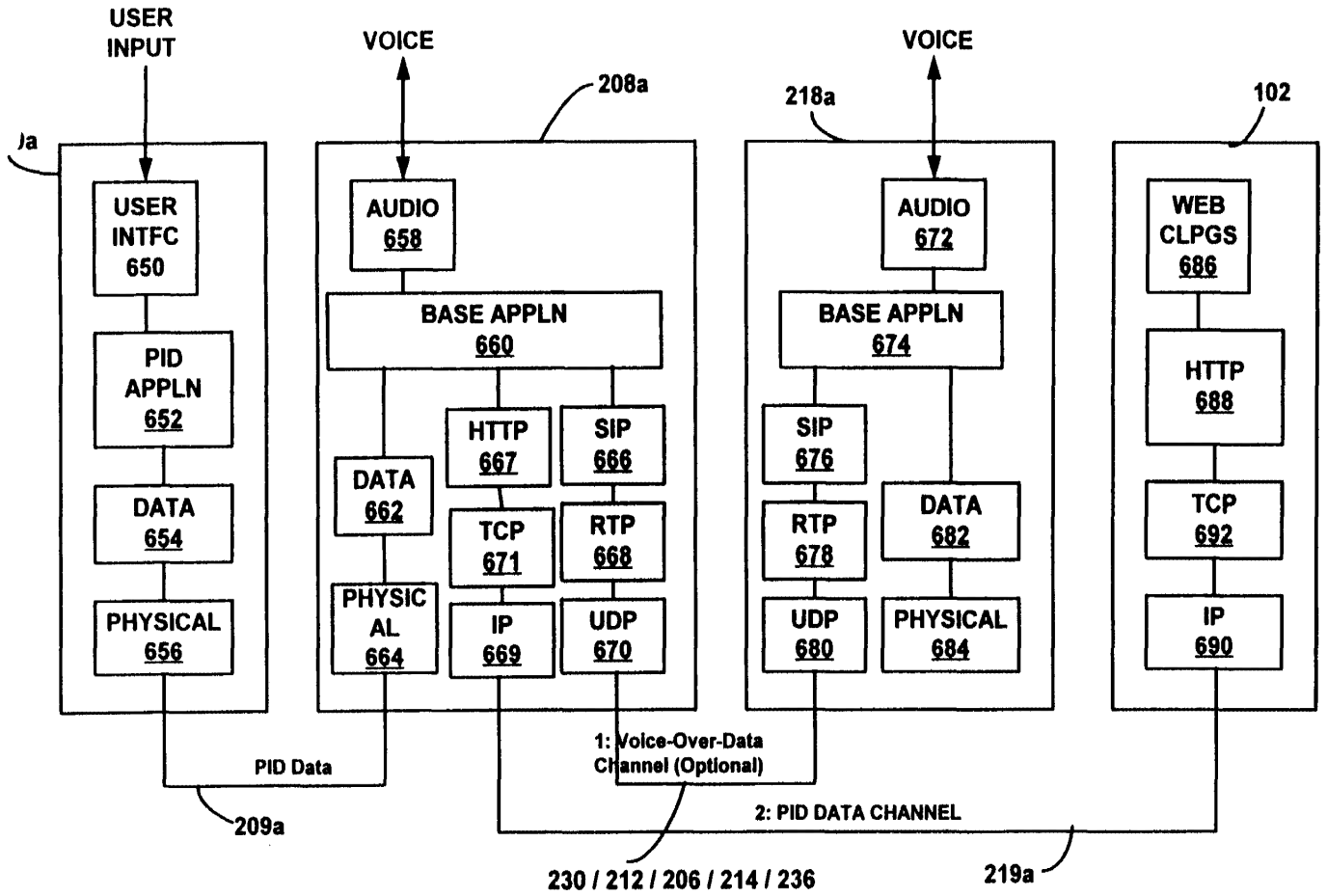
USER INPUT
VOICE
VOICE
208a
218a
102
Ja
USER INTFC 650
PID APPLN 652
DATA 654
PHYSICAL 656
AUDIO 658
BASE APPLN 660
DATA 662
HTTP 667
SIP 666
TCP 671
RTP 668
PHYSIC AL 664
IP 669
UDP 670
AUDIO 672
BASE APPLN 674
SIP 676
RTP 678
UDP 680
DATA 682
PHYSICAL 684
WEB CLPGS 686
HTTP 688
TCP 692
IP 690
PID Data
209a
1: Voice-Over-Data Channel (Optional)
2: PID DATA CHANNEL
230 / 212 / 206 / 214 / 236
219a

FIG. 7B

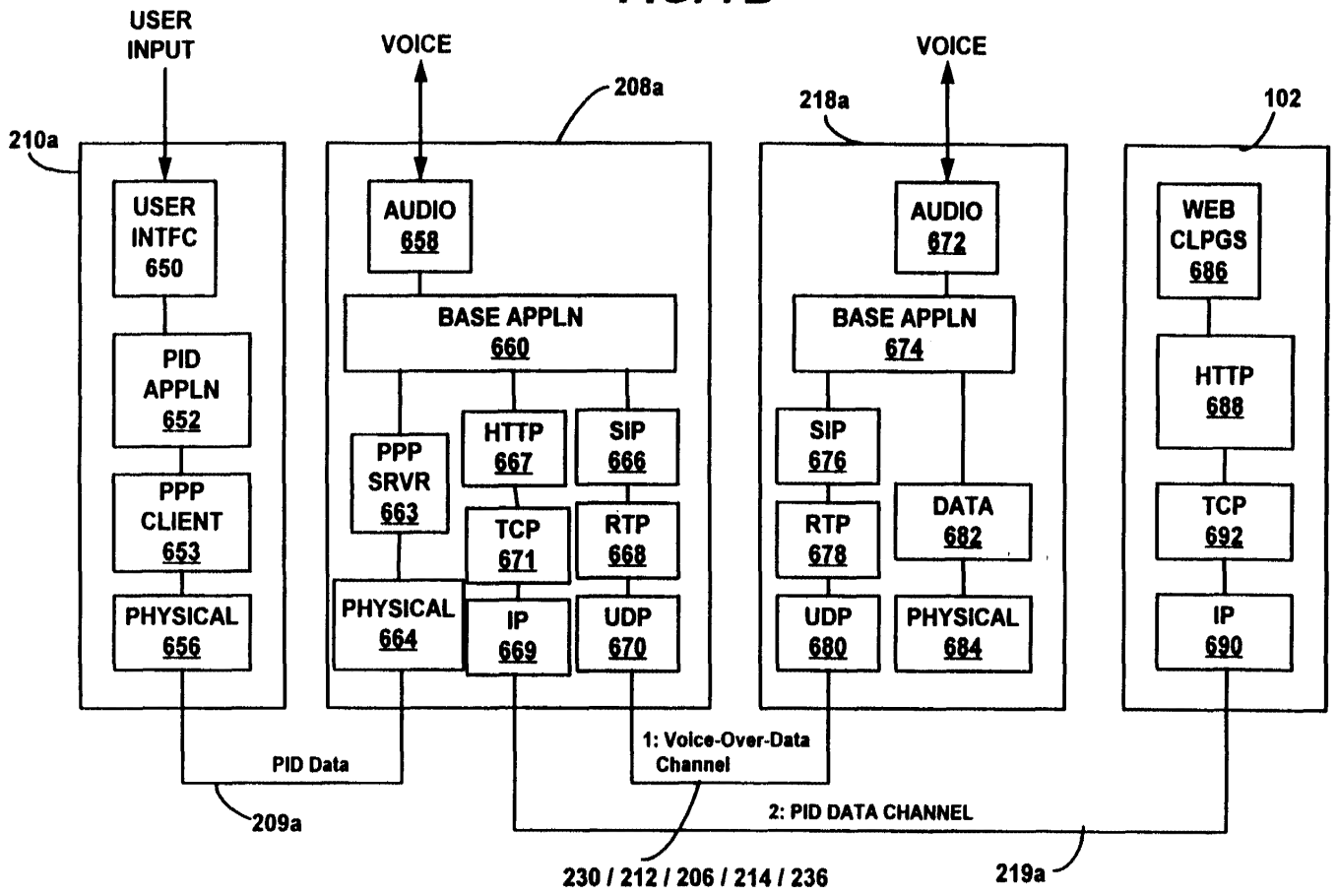
USER INPUT
VOICE
VOICE
210a
208a
218a
102
USER INTFC 650
PID APPLN 652
PPP CLIENT 653
PHYSICAL 656
AUDIO 658
BASE APPLN 660
PPP SRVR 663
HTTP 667
SIP 666
TCP 671
RTP 668
PHYSICAL 664
IP 669
UDP 670
AUDIO 672
BASE APPLN 674
SIP 676
RTP 678
UDP 680
DATA 682
PHYSICAL 684
WEB CLPGS 686
HTTP 688
TCP 692
IP 690
PID Data
1: Voice-Over-Data Channel
2: PID DATA CHANNEL
209a
230 / 212 / 206 / 214 / 236
219a

FIG. 8

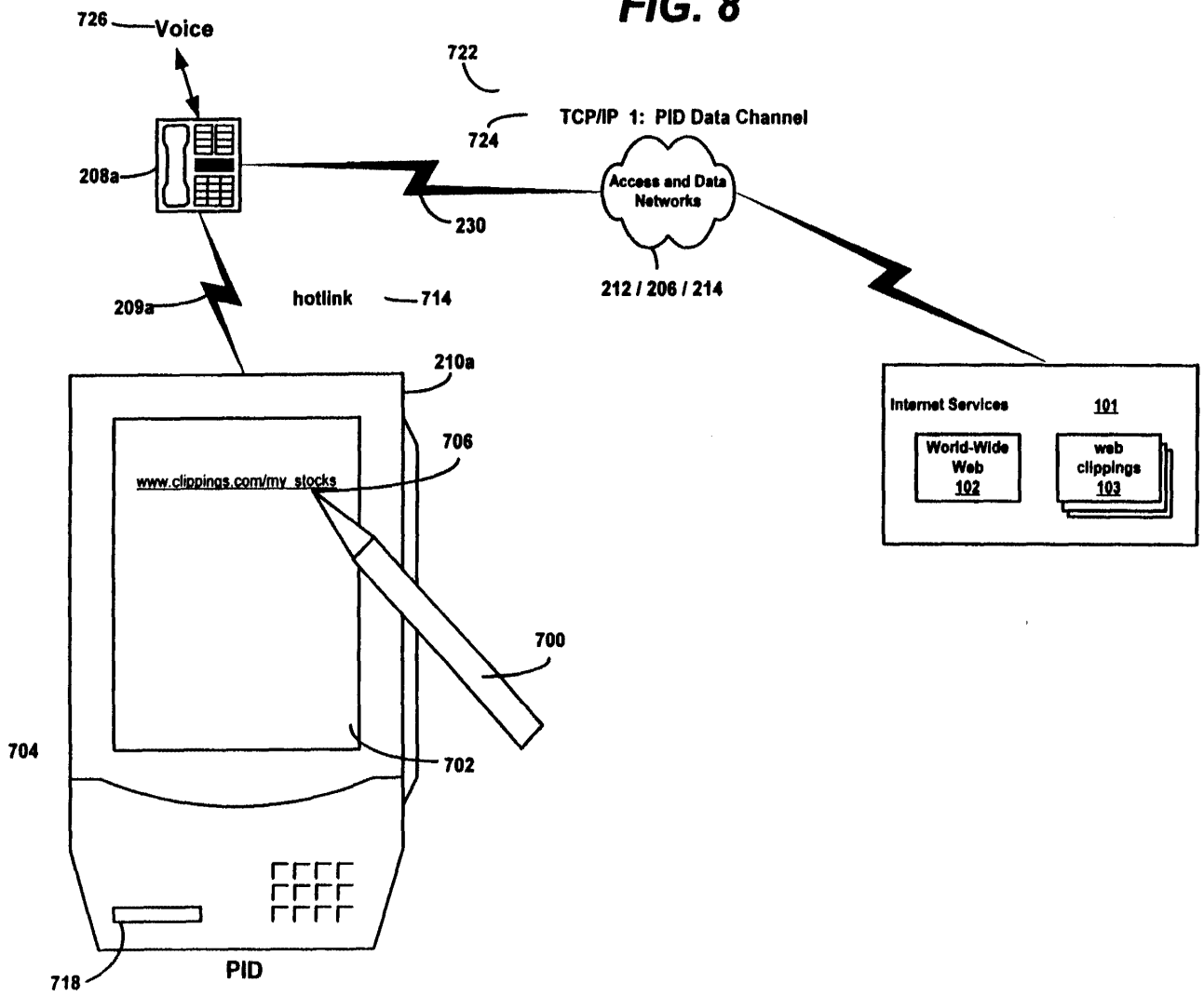
726
Voice
722
724
TCP/IP 1: PID Data Channel
208a
230
Access and Data Networks
212 / 206 / 214
209a
hotlink
714
210a
706
www.clippings.com/my_stocks
Internet Services
101
World-Wide Web
102
web clippings
103
700
704
702
718
PID

INTERNATIONAL SEARCH REPORT

Inter onal Application No
PCT/US 00/26594

A. CLASSIFICATION OF SUBJECT MATTER
IPC 7 H04M7/00

According to International Patent Classification (IPC) or to both national classification and IPC

B. FIELDS SEARCHED

Minimum documentation searched (classification system followed by classification symbols)
IPC 7 H04M

Documentation searched other than minimum documentation to the extent that such documents are included in the fields searched

Electronic data base consulted during the international search (name of data base and, where practical, search terms used)
EPO-Internal, WPI Data, PAJ, INSPEC, COMPENDEX, IBM-TDB

C. DOCUMENTS CONSIDERED TO BE RELEVANT

Category °	Citation of document, with indication, where appropriate, of the relevant passages	Relevant to claim No.
X	DALGIC I ET AL: "TRUE NUMBER PORTABILITY AND ADVANCED CALL SCREENING IN A SIP-BASED IP TELEPHONY SYSTEM" IEEE COMMUNICATIONS MAGAZINE,IEEE SERVICE CENTER. PISCATAWAY, N.J,US, vol. 37, no. 7, July 1999 (1999-07), pages 96-101, XP000835310 ISSN: 0163-6804 the whole document ---	1
X	WO 99 19988 A (INFOGEAR TECHNOLOGY CORP) 22 April 1999 (1999-04-22) abstract page 19, line 1 - line 7 ---	1
	-/--	

[X] Further documents are listed in the continuation of box C.

[X] Patent family members are listed in annex.

° Special categories of cited documents :

"A" document defining the general state of the art which is not considered to be of particular relevance

"E" earlier document but published on or after the international filing date

"L" document which may throw doubts on priority claim(s) or which is cited to establish the publication date of another citation or other special reason (as specified)

"O" document referring to an oral disclosure, use, exhibition or other means

"P" document published prior to the international filing date but later than the priority date claimed

"T" later document published after the international filing date or priority date and not in conflict with the application but cited to understand the principle or theory underlying the invention

"X" document of particular relevance; the claimed invention cannot be considered novel or cannot be considered to involve an inventive step when the document is taken alone

"Y" document of particular relevance; the claimed invention cannot be considered to involve an inventive step when the document is combined with one or more other such documents, such combination being obvious to a person skilled in the art.

"&" document member of the same patent family

Date of the actual completion of the international search	Date of mailing of the international search report
24 January 2001	06/02/2001

Name and mailing address of the ISA	Authorized officer
European Patent Office, P.B. 5818 Patentlaan 2 NL – 2280 HV Rijswijk Tel. (+31-70) 340-2040, Tx. 31 651 epo nl, Fax: (+31-70) 340-3016	Megalou, M

1

Form PCT/ISA/210 (second sheet) (July 1992)

Bright House Networks - Ex. 1108, Page 579

INTERNATIONAL SEARCH REPORT

Inter ›nal Application No
PCT/US 00/26594

C.(Continuation) DOCUMENTS CONSIDERED TO BE RELEVANT

Category °	Citation of document, with indication,where appropriate, of the relevant passages	Relevant to claim No.
X	WATANABE H ; SASAKI N ; TANIGAWA K ; KANAMORI Y : "Development of the BTRON-BrainPad" PROCEEDINGS 13TH TRON PROJECT INTERNATIONAL SYMPOSIUM , 'Online! 4 - 7 December 1996, pages 95-103, XP002158413 Tokyo, Japan page 98, paragraph 3.2 ---	1
A	GESSLER S ET AL: "PDAs as mobile WWW browsers" COMPUTER NETWORKS AND ISDN SYSTEMS,NL,NORTH HOLLAND PUBLISHING. AMSTERDAM, vol. 28, no. 1, 1 December 1995 (1995-12-01), pages 53-59, XP004001210 ISSN: 0169-7552 page 55, paragraph 3.1 -----	1

1

Form PCT/ISA/210 (continuation of second sheet) (July 1992)

Bright House Networks - Ex. 1108, Page 580

INTERNATIONAL SEARCH REPORT

.formation on patent family members

Inter onal Application No
PCT/US 00/26594

Patent document cited in search report	Publication date	Patent family member(s)	Publication date
WO 9919988 A	22-04-1999	AU 9570598 A	03-05-1999
		EP 1021902 A	26-07-2000
		ZA 9808251 A	13-05-1999

Form PCT/ISA/210 (patent family annex) (July 1992)

(12) INTERNATIONAL APPLICATION PUBLISHED UNDER THE PATENT COOPERATION TREATY (PCT)

(19) World Intellectual Property Organization
International Bureau

(43) International Publication Date
5 April 2001 (05.04.2001)

PCT

(10) International Publication Number
WO 01/24501 A1

(51) International Patent Classification[7]: H04M 7/00, 3/42

(21) International Application Number: PCT/US00/26618

(22) International Filing Date:
27 September 2000 (27.09.2000)

(25) Filing Language: English

(26) Publication Language: English

(30) Priority Data:
09/406,321 27 September 1999 (27.09.1999) US

(63) Related by continuation (CON) or continuation-in-part (CIP) to earlier application:
US 09/406,321 (CON)
Filed on 27 September 1999 (27.09.1999)

(71) Applicant *(for all designated States except US)*: **3COM CORPORATION** [US/US]; 3800 Golf Road, Rolling Meadows, IL 60008 (US).

(72) Inventors; and
(75) Inventors/Applicants *(for US only)*: **SCHUSTER, Guido, M.** [CH/US]; Apartment 408, 1433 Perry Street, Des Plaines, IL 60016 (US). **DEAN, Frederick, D.** [US/US]; 2311 N. Greenview Avenue, Chicago, IL 60614 (US). **MAHLER, Jerry, J.** [US/US]; 20 Country Club Drive, #B, Prospect Heights, IL 60070 (US). **GRABIEC, Jacek, A.** [PL/US]; 5903 W. Wilson, Chicago, IL 60630 (US). **SIDHU, Ikhlaq, S.** [US/US]; 403 River Grove Lane, Vernon Hills, IL 60061 (US).

(74) Agent: **PEREZ, Enrique**; McDonnell Boehnen Hulbert & Berghoff, 32nd Floor, 300 South Wacker Drive, Chicago, IL 60606 (US).

(81) Designated States *(national)*: AE, AG, AL, AM, AT, AU, AZ, BA, BB, BG, BR, BY, BZ, CA, CH, CN, CR, CU, CZ, DE, DK, DM, DZ, EE, ES, FI, GB, GD, GE, GH, GM, HR, HU, ID, IL, IN, IS, JP, KE, KG, KP, KR, KZ, LC, LK, LR, LS, LT, LU, LV, MA, MD, MG, MK, MN, MW, MX, MZ, NO, NZ, PL, PT, RO, RU, SD, SE, SG, SI, SK, SL, TJ, TM, TR, TT, TZ, UA, UG, US, UZ, VN, YU, ZA, ZW.

(84) Designated States *(regional)*: ARIPO patent (GH, GM, KE, LS, MW, MZ, SD, SL, SZ, TZ, UG, ZW), Eurasian patent (AM, AZ, BY, KG, KZ, MD, RU, TJ, TM), European

[Continued on next page]

(54) Title: SYSTEM AND METHOD FOR CONTROLLING TELEPHONE SERVICE USING A WIRELESS PERSONAL INFORMATION DEVICE

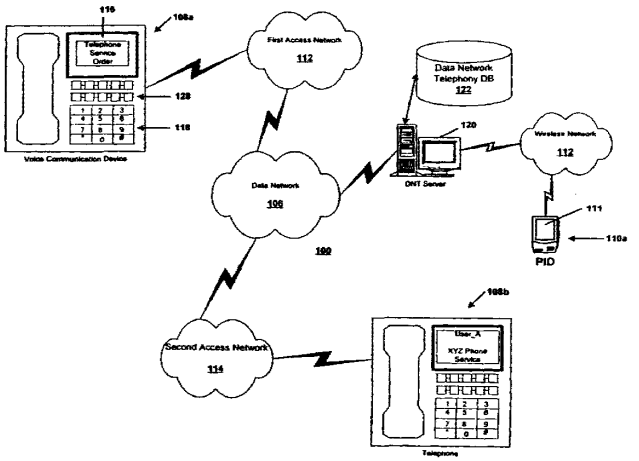

(57) Abstract: A system and method for controlling telephony service to a user with a wireless personal information device (PID). The user may connect to a telephony control server via a data network. The telephony control server has access to the user's telephony account which indicates the user's telephone number in a telephone number entry. The user connection is by a wireless PID that uses the wireless cellular infrastructure to connect to a data network gateway or server. Once the connection is made, the user issues a command to set the telephone number entry in the user's data network telephony account to a specific telephone number. The user may then invoke a contacts application in the wireless PID and select a person from the contacts list to call. The user selects the entry in the contact application to send a command to initiate a telephone connection between the party selected and the user at the telephone set at the telephony control server.

WO 01/24501 A1

patent (AT, BE, CH, CY, DE, DK, ES, FI, FR, GB, GR, IE, IT, LU, MC, NL, PT, SE), OAPI patent (BF, BJ, CF, CG, CI, CM, GA, GN, GW, ML, MR, NE, SN, TD, TG).

Published:

— *With international search report.*

— *Before the expiration of the time limit for amending the claims and to be republished in the event of receipt of amendments.*

For two-letter codes and other abbreviations, refer to the "Guidance Notes on Codes and Abbreviations" appearing at the beginning of each regular issue of the PCT Gazette.

SYSTEM AND METHOD FOR CONTROLLING TELEPHONE SERVICE USING A WIRELESS PERSONAL INFORMATION DEVICE

BACKGROUND OF THE INVENTION

A. Field of the Invention

This invention relates generally to the field of telecommunication, and more particularly to methods by which a personal information device ("PID") can be used to control a telephone system.

B. Description of Related Art and Advantages of the Present Invention

For many years, telephone service providers on the Public Switched Telephone Network (PSTN) provided their customers nothing more than a telephone line to use to communicate with other subscribers. Over time, telephone service providers have enhanced their service by providing Custom Local Area Signaling Service (CLASS) features to their customers. Similar communication services are provided by a Private Branch Exchange (PBX), which is typically implemented in a nonresidential setting.

The CLASS features permit customer subscribers of the features to tailor their telephone service according to individual needs. Some of the more well-known CLASS features are:

- Call blocking: The customer may specify one or more numbers from which he or she does not want to receive calls. A blocked caller will hear a rejection message, while the callee will not receive any indication of the call.
- Call return: Returns a call to the most recent caller. If the most recent caller is busy, the returned call may be queued until it can be completed.
- Call trace: Allows a customer to trigger a trace of the number of the most recent caller.
- Caller ID: The caller's number is automatically displayed during the silence period after the first ring. This feature requires the customer's line to be equipped with a device to read and display the out-of-band signal containing the number.
- Caller ID blocking: Allows a caller to block the display of their number in a callee's caller ID device.

• Priority ringing: Allows a customer to specify a list of numbers for which, when the customer is called by one of the numbers, the customer will hear a distinctive ring.

• Call forwarding: A customer may cause incoming calls to be automatically forwarded to another number for a period of time.

A customer subscriber to a CLASS feature may typically activate and/or de-activate a CLASS feature using "*" directives (e.g., *69 to automatically return a call to the most recent caller). CLASS features may also be implemented with the use of out-of-band data. CLASS feature data is typically transmitted between local Class-5 switches using the Signaling System 7 (SS7).

Local Exchange Carriers (LECs) and other similar organizations maintain CLASS offices that typically contain a database entry for each customer. The database allows specification of the CLASS features a customer has subscribed to, as well as information, such as lists of phone numbers, associated with those features. In some cases, customers may edit these lists on-line via a touch-tone interface. A list of all phone numbers that have originated or terminated a call with each customer is often included in the CLASS office database. For each customer, usually only the most recent number on this list is stored by the local Class-5 switch.

A Private Branch Exchange (PBX), is a stored program switch similar to a Class-5 switch. It is usually used within a medium-to-large-sized business for employee telephony service. Since a PBX is typically operated by a single private organization, there exists a wide variety of PBX services and features. Custom configurations are common, such as integration with intercom and voice mail systems. PBX's typically support their own versions of the CLASS features, as well as other features in addition to those of CLASS. Most PBX features are designed to facilitate business and group communications.

A summary of typical PBX features includes:

• Call transfer: An established call may be transferred from one number to another number on the same PBX.

• Call forwarding: In addition to CLASS call forwarding, a PBX number can be programmed to automatically transfer a call to another number when the first number does not answer or is busy.

• Camp-on queuing: Similar to PSTN call return, a call to a busy number can be queued until the callee can accept it. The caller can hang up their phone and the PBX will ring them when the callee answers.

• Conference calling: Two or more parties can be connected to one another by dialing into a conference bridge number.

• Call parking: An established call at one number can be put on hold and then reestablished from another number. This is useful when call transfer is not warranted.

• Executive override: A privileged individual can break into an established call. After a warning tone to the two participants, the call becomes a three-way call.

While the CLASS and PBX features have enhanced the offerings of service providers that use the PSTN, the features are nevertheless limited in their flexibility and scope. The effect to the user is that the features become clumsy and difficult to use. For example, in order to use the Call Forwarding function, the user must perform the steps at the user's own phone prior to moving to the location of the telephone to which calls will be forwarded. A more desirable approach, from the standpoint of usefulness to the user, would be to perform the steps at the telephone to which calls will be forwarded.

Much of the lack of flexibility of the PSTN features is due to the lack of flexibility in the PSTN system itself. One problem with the PSTN is that the terminal devices (e.g. telephones) lack intelligence and operate as "dumb" terminals on a network having the intelligence in central offices. Most PSTN telephones are limited in functional capability to converting the analog signals they receive to sound and converting the sound from the handset to analog signals.

Some PSTN telephones have a display device and a display function to display specific information communicated from intelligent agents in the PSTN network using the PSTN signaling architecture. For example, some PSTN telephones have a display function to enable the Caller ID feature. Even such PSTN telephones are limited however by the closed PSTN signaling architecture, which prohibits access by the PSTN telephones to the network signaling protocols. The display functions are effectively limited to displaying text, again, as a "dumb" terminal.

Bright House Networks - Ex. 1108, Page 586

The Internet presents a possible solution for distributing intelligence to telephony terminal devices. In Internet telephony, digitized voice is treated as data and transmitted across a digital data network between a telephone calls' participants. One form of Internet telephony uses a telephony gateway/terminal where IP telephony calls are terminated on the network. PSTN telephones are connected by a subscriber line to the gateway/terminal at the local exchange, or at the nearest central office. This form of Internet telephony provides substantial cost savings for users. Because the PSTN portion used in Internet telephony calls is limited to the local lines on each end of the call, long distance calls may be made for essentially the cost of a local call.

It is presently contemplated that Internet service providers with a Point of Presence on the Internet will be suitable entities to offer Internet telephony services. The devices that are used by most Internet service providers for Internet access are known as Network Access Servers or Remote Access Servers. These products are commercially available from 3Com Corporation and other telecommunications equipment manufacturers such as Ascend Communications, Lucent Technologies (successor to Livingston Enterprises), and Multitech.

A representative Network Access Server is the Total Control Enterprise Network Hub from 3Com Corporation, described in the patent of Dale M. Walsh, et al., U.S. No. 5,597,595, which is fully incorporated by reference herein. This device further includes a plurality of digital modems to perform signal conversions on the data from the telephone line channels and a bus network connecting the modems to a network interface card or module. The network interface couples the device to a local or wide are network, such as the Internet service provider backbone network of the Internet, network Access Servers are particularly suited for use in Internet telephony, as they can be configured with software to perform the functions of a Gateway or terminal, as defined by the relevant ITU-T H.323 and H.225 specifications. This is particularly so if the device is configured with a general purpose computing platform (such as the EdgeServer card of the Total Control Network Access Server), as described in the pending patent application of William Verthein, Daniel L. Schoo and Todd Landry, Serial No. 08/813,173, also incorporated by reference herein.

Bright House Networks - Ex. 1108, Page 587

Notwithstanding the costs savings provided by this form of Internet telephony, it is no more flexible than the PSTN with respect to providing enhancements and features to the basic telephone service.

In another form of Internet telephony, telephones are connected to access networks that access the Internet using a router. The telephones in this form of Internet telephony may be substantially more intelligent than typical PSTN telephones. For example, such a telephone may include substantially the computer resources of a typical personal computer.

It would be desirable to incorporate CLASS and PBX features into a data network telephony system that uses a data network such as the Internet.

It would be desirable to provide new features and enhancements to telephony service that accommodates and conforms to users' needs.

It would also be desirable to provide features and capabilities to telephone service that create new opportunities for users and for service providers.

The present invention addresses the above needs by providing a system in a data network telephony system, such as for example, the Internet, that uses a wireless personal information device (PID to control the telephony system. A user may configure his or her telephone service by connecting to a telephony control server using the wireless PID. The wireless PID connection to the telephony control server may provide a user with the power to control the behavior of the telephone system to meet the user's needs.

Bright House Networks - Ex. 1108, Page 588

SUMMARY OF THE INVENTION

In a first aspect of the present invention, a personal information device (PID) is provided for controlling telephone service. The PID includes a user interface having a display and a user input device. A user profile includes a telephone number entered by a user. A communications function in the PID establishes a data communications channel over a wireless network to a telephony control server. The telephony control server contains the user's telephony account. An account update function in the PID sends a message over the data communication channel to the telephony control server. The message contains the user profile telephone number and a request to set the user's telephony account telephone number the user profile telephone number.

In a second aspect of the present invention, a contacts application is added to the PID to display a plurality of contact entries. Each entry includes a contact telephone number. The contacts application includes a function to send the contact telephone number to the telephony control server over the data communications channel with a message to call the contact telephone number.

In a third aspect of the present invention, a telephony control server includes a network interface operable to provide data connectivity with a user accessible over a wireless network. An accounts program accesses a plurality of user accounts. The accounts program may receive a message to set a user telephone number. Each user account contains a telephone number entry, which the accounts program can set to the telephone number entry in response to the message. A connection signaling function in the telephony control server may receive a call message from the user to establish a telephone connection between the user telephone number and a callee telephone number contained in the call message. The connection signaling function initiates a telephone call having at least a portion of the telephone call connected via the data network.

In a fourth aspect of the present invention, a gateway locator is included in the telephony control server to locate a user gateway closest to the user telephone number and to locate a callee gateway closest to the callee telephone number. The telephony control server initiates the portion of the call connected via the data network between the user gateway and the callee gateway.

In a fifth aspect of the present invention, a method is provided for initiating a data network telephone call using a wireless PID with a display. A contacts application is started to display a plurality of contact entries on the display of the PID. One of the contact entries identifying a callee is selected. A data communications channel is initiated to a telephony control server having a user telephone number. A message is sent to the telephony control server to establish the telephone call between the callee and the user by sending a message to call the callee, connecting a telephone call to the user, and connecting the telephone call to the callee.

These and other features and advantages of the present invention will become more apparent from the following detailed description of preferred embodiments of the present invention.

Bright House Networks - Ex. 1108, Page 590

BRIEF DESCRIPTION OF THE DRAWINGS

Presently preferred embodiments of the invention are described below in conjunction with the appended drawing figures, wherein like reference numerals refer to like elements in the various figures, and wherein:

FIG. 1 is block diagram of a data network telephony system for providing advertising services in accordance with embodiments of the present invention;

FIG. 2A shows one embodiment of the system of FIG. 1;

FIG. 2B shows one example of one of the personal information device (PID) in FIG. 2A;

FIG. 3 is a pictorial and block diagram showing one example of a user controlling a telephone system using a wireless PID;

FIG. 4 is a pictorial and block diagram showing another example of a user controlling a telephone system using a wireless PID;

FIG. 5 is a pictorial and block diagram showing another example of a user controlling a telephone system using a wireless PID;

FIG. 6 is a pictorial and block diagram showing another example of a user controlling a telephone system using a wireless PID;

FIG. 7 is a pictorial and block diagram showing another example of a user controlling a telephone system using a wireless PID;

FIG. 8 is a flowchart showing one example of a method for controlling a telephone system with a wireless PID; and

FIG. 9 is a flowchart showing another example of a method for controlling a telephone system with a wireless PID.

Bright House Networks - Ex. 1108, Page 591

DETAILED DESCRIPTION OF THE PREFERRED EMBODIMENT

The following references to patent applications filed concurrently herewith are incorporated be reference:

* "System and Method for Advertising Using Data Network Telephone Connections" to Schuster, et al.
* "System and Method for Providing User-Configured Telephone Service in a Data Network Telephony System" to Sidhu, et al.
* "System and Method for Accessing a Network Server Using a Portable Information Device Through a Network Based Telecommunication System" to Schuster, et al.
* "System and Method for Interconnecting Portable Information Devices Through a Network Based Telecommunication System" to Schuster, et al.
* "System and Method for Enabling Encryption on a Telephony Network" to Schuster, et al.
* "System and Method for Using a Portable Information Device to Establish a Conference Call on a Telephony Network" to Schuster, et al.
* "System and Method for Associating Notes with a Portable Information Device on a Network Telephony Call" to Schuster, et al.
* "System and Method for Providing Shared Workspace Services Over a Telephony Network" to Schuster, et al.
* "System and Method for Providing Service Provider Configurations for Telephones in a Data Network Telephony System" to Schuster, et al.

The following additional references are also incorporated by reference herein:

* "Multiple ISP Support for Data Over Cable Networks" to Ali Akgun, et al.
* "Method and System for Provisioning Network Addresses in a Data-Over-Cable System" to Ali Akgun, et al., Serial No. 09/218,793.
* "Network Access Methods, Including Direct Wireless to Internet Access" to Yingchun Xu, et al., Serial No. 08/887,313

A. Data Network Telephony System

FIG. 1 is a block diagram showing an example of a system 100 for controlling a telephony system using a wireless personal information device (PID) 110 according to one embodiment of the present invention. The system includes a data network 106. A first voice communication device 108a may communicate by a voice connection over the data network 106 by establishing the connection via first access network 112. The voice connection may be linked to a second voice communication device 108b which is accessed via a second access network 114.

The data network 106 in the system 100 typically includes one or more Local Area Networks (LANs) connected to one another or to a Wide-Area Network (WAN), such as an Internet Protocol (IP) network, to provide wide-scale data connectivity. The data network 106 may use Voice Over Packet (VOP) schemes in which voice signals are carried in data packets. In one embodiment, the data network 106 may include one or more LANs such as Ethernet LANs and support data transport protocols for performing Voice-over-Internet-Protocol (VoIP) techniques on the Internet. For further details regarding VoIP, see the information available through the Internet Engineering Task Force (IETF) at www.ietf.org. In addition, an Internet Telephony gateway may be included within the system 100 to allow for voice connections to users connected by subscriber lines at a PSTN Central Office.

The first and second voice communication devices 108a and 108b may include a direct interface to a data-switched network, such as a LAN. Such voice communications devices 108a,b typically include a voice input, a voice output and a voice processing system. The voice processing system converts voice sound from the voice input to digital data signals that are communicated on a voice connection over the data network. The voice processing system also converts digital data signals received from the voice connection to voice sound at the voice output. The voice communication devices 108a and 108b typically include a central processing unit and memory to store and process computer programs. Each voice communication device 108a and 108b typically includes a unique network address, such as an IP address, in memory to uniquely identify it to data network 106 and permit data packets to be routed to the device.

Bright House Networks - Ex. 1108, Page 593

In one embodiment, the voice communication device 108a includes a handset with a receiver and transmitter similar or identical to handsets of traditional circuit-switched telephones. A console on which the handset sits may include the voice processing system, a display 116 and a keypad 118. The voice communication device 108a may also include a speed dial key set 128 programmed, or assigned to initiate connections to other voice communication devices that may be connected to the data network 106. In a preferred embodiment, the keys on the speed dial key set 128 may be programmed remotely by a message carried on a voice connection using a selected data transport protocol .

One example of the voice communication device 108a in a preferred embodiment is the NBX 100™ communication system phones offered by 3Com® Corporation, that has been modified, as described herein, to perform speed dial programming. In alternative embodiments, the voice communication device 108a may include any device having voice communications capabilities. For example, a personal computer having a microphone input and speaker output may also be used as the voice communication device 108a. Other configurations for the user interface are also intended to be within the scope of the present invention.

The voice communication devices 108a, 108b may also include a typical plain-old telephone set (POTS) currently used for circuit-switched telephony in the Public Switched Telephone Network (PSTN).

The details relating to operation of the voice communication devices 108a and 108b depend on the nature of the data network 106 and the nature of the access networks 112, 114 connecting the voice communication devices 108a and 108b to each other and/or to other network entities. The access networks 112, 114 typically include any high bandwidth network adapted for data communications, i.e. a network having a bandwidth greater than 64,000 bits-per-second (bps). The access networks 112, 114 may link to the voice communication device 108a using an Ethernet LAN, a token ring LAN, a coaxial cable links (*e.g.* CATV adapted for digital communication), a digital subscriber line (DSL), twisted pair cable, fiberoptic cable, an integrated services digital network (ISDN) link, and wireless links. In embodiments that may not require bandwidth greater than 64,000 bps, the access networks 112, 114 may also include the PSTN and link the voice communications device 108a by a subscriber line.

The system 100 in FIG. 1 shows a telephony control server 120 and an accounts database 122. The telephony control server 120 includes an interface to the data network 106. The purpose of the telephony control server is to provide users of the telephony system with control over their telephony service. Users may subscribe for telephony service from a telephony service provider (*e.g.* an Internet Service Provider, or ISP). The service provider configures the users' accounts and maintains the accounts in the accounts database 122. The users' account may include information about the user and the user's service provisions. A typical account may include the information shown in Table A.

User Account Information

- User identifier: a sequence of alphanumeric elements that uniquely identifies the user. The user identifier may be formatted as an E.164 telephone number, or as a name.
- Telephone Number/Identifier: a sequence of alphanumeric elements that uniquely identifies the telephone used by the user. The user identifier may be formatted as an E.164 telephone number, or as a number, such as a MAC address.
- The user's name, address and other information that may be used primarily for billing purposes. For example, the user's checking account number, credit card number or other financial information may be provided for automatic billing and payment capabilities.
- User's telephony service features. The user may subscribe, permanently or temporarily, to one or more telephony service features offered by the service provider. For example:
  - Voice mail
  - Caller ID
  - Call Forwarding with true number portability
  - Teleconferencing
- Menu of functions displayed at the telephone
- Help menu displayed at the telephone
- Speed dial key programming (*e.g.* speed dial to customer service)
- Features as standard offerings – to compete, a provider may offer features that normally cost extra (*e.g.* caller ID, etc.) as standard features
- Packaged configurations – Features and offerings may be grouped as distinctly priced packages
- Functions using PDA connectivity (*e.g.* Remote Whiteboard communication, control of telephone use through PDA)

TABLE A

Bright House Networks - Ex. 1108, Page 595

The telephony control server 120 is connected to the data network 106 and configured to allow access by users. For example, users may access the telephony control server 120 by connecting to a web page. The telephony control server 120 may also include functions to initiate telephone calls using a call management protocol and one or more data communications channels. In a preferred embodiment, the user connects to the telephony control server 120 from a wireless personal information device (PID) 110. The preferred wireless PID 110 is the Palm 7 from 3Com.

The wireless PID 110 includes wireless communications capabilities to permit connections to be made over a wireless network 112. The wireless network 112 preferably includes any cellular telephone network, although other technologies (*e.g.* infrared, microwave, non-cellular radio, etc.) may be used. The advantage of using cellular radio is that it is widely available.

One advantage of the system 100 in FIG. 1 is that a user may use the wireless PDA 110 to control telephony service provided to voice communications devices 108a,b that interface directly to data connections (*i.e.* data network telephones) as well as to voice communications devices 108a,b connected to the PSTN. FIG. 2A shows one embodiment of the system 100 in FIG. 1 that provides a user with the capability of controlling telephone service with a wireless PDA, such as the wireless PDA 110.

The system 200 shown in FIG. 2A shows a data network telephony system that provides voice over data communication for both PSTN telephones and data network telephones. The system 200 includes a data network telephony system that includes a first data network telephone 208 connected to a first local area network 212. The first local area network provides the data network telephone 208 with access to a data network 206 via a router 218. The first local area network 212 also includes a first connection server 250, which uses a call management protocol to provide data network telephony service to the first data network telephone 208 (and other telephones connected to the local area network 212).

The system 200 in FIG. 2A also includes a second local area network 214 to provide data network access to a second data network telephone 218 via a router 215. A second connection server 238 provides call management services for the second data network telephone 218.

Bright House Networks - Ex. 1108, Page 596

In one embodiment, the system shown in FIG. 2A uses the Session Initiation Protocol (SIP) as a call management protocol to establish, maintain and teardown sessions, or telephone calls between users. There are two major architectural elements to SIP: the user agent (UA) and the network server. The UA resides at the SIP end stations, (e.g. the data network telephones), and contains two parts: a user agent client (UAC), which is responsible for issuing SIP requests, and a user agent server (UAS), which responds to such requests. There are three different network server types: a redirect server, a proxy server, and a registrar. The various network server types may be combined into a single server, such as the telephony connection server 250, 238. Not all server types are required to implement the embodiments of the present invention. The communication services to be provided will determine which servers are present in the communication system. Preferred embodiments of the present invention may be carried out using proxy servers.

One example of a SIP operation involves a SIP UAC issuing a request, a SIP proxy server acting as end-user location discovery agent, and a SIP UAS accepting the call. A successful SIP invitation consists of two requests: INVITE followed by ACK. The INVITE message contains a user identifier to identify the callee, a caller user identifier to identify the caller, and a session description that informs the called party what type of media the caller can accept and where it wishes the media data to be sent. User identifiers in SIP requests are known as SIP addresses. SIP addresses are referred to as SIP Uniform Resource Locators (SIP-URLs), which are of the form *sip:user@host.domain*. Other addressing conventions may also be used.

Redirect servers process an INVITE message by sending back the SIP-URL where the callee is reachable. Proxy servers perform application layer routing of the SIP requests and responses. A proxy server can either be stateful or stateless. A stateful proxy holds information about the call during the entire time the call is up, while a stateless proxy processes a message without saving information contained in the message. Furthermore, proxies can either be forking or non-forking. A forking proxy can, for example, ring several phones at once until somebody takes the call. Registrar servers are used to record the SIP address (called a SIP URL) and the associated IP address. The most common use of a registrar server is for the UAC to notify the registrar where the UAC can be reached for a specified amount of time.

When an INVITE request arrives for the SIP URL used in a REGISTER message, the proxy or redirect server forwards the request correctly.

At the first local area network 212, the central registrar/proxy server, such as the telephony connection server 250 is the primary destination of all SIP messages trying to establish a connection with users on the local area network 212. Preferably, the telephony connection server 250 is also the only destination advertised to the SIP clients outside the LAN 212 on behalf of all the SIP clients residing on the LAN 212. The network telephony server 250 relays all SIP INVITE messages to the appropriate final destination (or another SIP proxy), based on a database lookup using a user database (not shown). It allows all mobile clients to register with their current locations.

Similarly, the second telephony connection server 238 is the primary destination of all SIP messages trying to establish a connection with the data network telephone 218 connected to the second local area network 214. Preferably, the second telephony connection server 238 is also the only destination advertised to the SIP clients outside the LAN 214 on behalf of all the SIP clients (*e.g.* data network telephones) residing on the LAN 214. The second telephony connection server 238 relays all SIP INVITE messages to the appropriate final destination (or another SIP proxy), based on a database lookup using the user database (not shown).

The data network telephones 208 and 218 in the system 200 preferably have pre-programmed device identifiers (*e.g.* phone numbers), represented as SIP-URL's that are of the form *sip:8475551212@3com.com*. After power-up, each data network telephones 208, 218 sends a SIP REGISTER message to the default registrar, such as the telephony connection servers 250, 238. When a call arrives at one of the telephony connection servers 250, 238 for any of the registered SIP URLs, the server will forward the call to the appropriate destination. If a data network telephone is moved to a new location, all calls to the associated SIP URL will still be properly routed to that device. The system in FIG. 2A, therefore, provides device mobility in the sense that calls will "follow" the data network telephone according to its SIP URL. This is especially useful if the data network telephone 208, 218 is running the DHCP (Dynamic Host Configuration Protocol) so that when the location is changed, the IP address is also automatically changed.

Bright House Networks - Ex. 1108, Page 598

In one preferred embodiment of the present invention, the wireless PID 210 may send a third party register request directly to the telephony connection server 250, 238. Alternatively, the wireless PID 210 may connect to an application in the telephony control server 120 that may issue a request to one of the data network telephones 208, 218 to register as belonging to the user. The capability to re-register the user's telephone may correspond to a feature offered by a telephony service provider to give a user control over his/her telephone service. When the user is not at his/her telephone, the user may modify a profile of personal information stored in the wireless PID 210 with a telephone number that is nearby. The user may then connect to the telephony control server 120 to change the user's telephone number to that of the nearby telephone.

One advantage of using the telephony control server 120 with the wireless PID 210 is that the user may modify his/her account with the telephone number of any type of telephone.

System 200 in FIG. 2A also shows an alternative arrangement of telecommunications devices that can be used to conduct an IP telephony call. The system 200 includes a first gateway 233, a first central office 235 and a PSTN telephone 237 belonging to a user USER A. A second user, USER B, has a second PSTN telephone 226 connected to a second gateway 222 via a second central office 224. A third PSTN telephone 227 is connected to a third gateway 223 via a third central office 225. This alternative arrangement permits telephone service over the data network 206 using PSTN telephones.

An Internet telephony call from USER A's telephone 237 is transmitted over the Public Switched Provider (ISP) Gateway/Terminal 233. The ITU-T H.225 and H.323 specifications may be used for call management, one of the functions of the Gateway/Terminal 233. The gateway/Terminal 233 may be implemented in a Network Access Server, as described in more detail below.

The Gateway/Terminal 233 provides an interface between the PSTN (typically a time division multiplexed line such as a T1 line) and the data network 206, which is typically a packet switched network such as the Internet or the local ISP backbone network. The Gateway/Terminal 233 routes the call onto the Internet 206, where it is forwarded to a gatekeeper 219 in accordance with the H.323 and H.225 standards.

Bright House Networks - Ex. 1108, Page 599

The Gatekeeper 219 may be embodied as a general purpose computer, or as one function performed by an existing piece of telecommunications equipment such as a network access server. The gatekeeper 219 determines where to send the call over the Internet 206 to the proper terminating ISP Gateway/Terminal 222, for example, for the called party. The terminating Gateway/Terminal 222 calls the called party over the PSTN via the central office 224 to USER B's telephone 226. The gateway/terminal 222 facilitates communication between the telephone 226 at the near end with the telephone 237at the far end.

The wireless PID 210 may be used to control telephone service to the PSTN telephones 226, 227, 237. FIG. 2B shows a pictorial and block diagram of one embodiment of the wireless PDA 210 and the telephony control server 120.

The wireless PDA 210 includes (in 210') a user interface circuitry 291, a wireless interface 304, a processor 293 and alternative input/output configurations 295, 297, 299. The user interface circuitry 291 controls the user interface of the wireless PID 210. The user interface of the Wireless PID 210 may include a stylus, buttons, touch sensitive display buttons, the display, etc.

The wireless network interface 304 performs the functions needed to establish a data connection over the wireless network 216. The processor 293 includes a contacts application 300, a user profile 302 and a communications application 304. The contacts application 300 includes any application for a PID (*e.g.* PDAs) that allows a user to enter information about personal and business contacts.

The user profile 302 stores personal information about the owner of the PID 210. The user profile 302 may include account information about the user's telephone service as well. In one embodiment, the user may enter personal information as a contact in the contacts application 300 and designate the entry as the user profile 302.

The communications function 304 allows a user to initiate a connection to the telephony control server 120 to modify the user's account, or to initiate a telephone call. The communications function 304 may include a program that senses a designated key activation. Upon activation of the designated key, the communications function 304 composes a message to transmit to the telephony control server 120. For example, to initiate a telephone call to a person identified by an entry in the contacts

Bright House Networks - Ex. 1108, Page 600

application, the user selects the entry and presses a 'send' screen button to send the request to the telephony control server 120.

The telephony control server 120 in FIG. 2B includes (at 120') a network interface 121, an accounts program 127, a server/gateway locator 125 and a telephone connection signaling function 123. The network interface 121 performs communications functions for communicating on data communications channels in accordance with selected data transport protocols. In a preferred embodiment, the network interface 121 in the telephony control server 120 communicates with the wireless network interface 304 in the PID 210 using a TCP/IP connection. Other protocols and protocol combinations as required by the wireless network infrastructure selected may also be used.

The accounts program 127 performs requests on selected user accounts in the accounts database 122. For example, when the telephony control server 120 receives a request to set a telephone number for selected user, the accounts program 127 retrieves the selected user's account and performs the requested modification.

The telephone connection signaling function 123 performs call management functions to initiate a telephone call between users as requested by the PID 210 user. The telephone connection signaling function 123 may include a signaling stack in accordance with SIP, H.323, MEGACO, MGCP, etc. The signaling stack may support multiple protocols as well.

The server/gateway locator 125 performs location functions for requests to initiate a telephone call. For example, if a PSTN telephone requests to initiate a call to a second PSTN telephone, the server/gateway locator 125 locates the gateway closest to the second PSTN, and if necessary the gateway closest to the first PSTN. The server/gateway locator 125 may include a gatekeeper function, or it may include a function that seeks the gatekeeper 219 shown in FIG. 2A.

FIG. 3 an example of how the wireless PID 210 may advantageously control user A's telephone service in accordance with one embodiment to the present invention. User A may enter and maintain a profile of personal information in the wireless PID 210, as shown on the display 111. In one embodiment of the present invention, user A may also maintain a similar or identical profile in the telephony control server 120. The telephony control server 120 stores the profile of user A's

Bright House Networks - Ex. 1108, Page 601

personal information in the accounts database 122. The profile of user A's personal information may include any type of personal information that user A may wish to store in the wireless PID 210. Preferably, however, user A's profile information includes information about user A's telephone service, such as user A's telephone number. As shown on the display 111, user A has entered *A_Number* as his phone number. The number *A_Number* corresponds with the telephone number addressed or identifying user A's telephone 237.

FIG. 3 shows how user A may update his profile of information in the account database 122. User A may update his profile of information in the account database 122 by establishing a data connection 250 with the telephony control server 120. The data connection 250 includes a wireless connection via the wireless network 216 and on the data network 206. In a preferred embodiment, the data connection 250 includes a cellular call over the wireless connection with a TCP/IP channel established between the PID 210 and the telephony control server 120.

Once the data connection 250 is established, the user may use the PID 210 to send a message to set user A's profile in the telephony control server 120 on the data connection 250. As shown in FIG. 3, user A's account in the accounts database 122 shows A's phone number as being *A_Number*.

One advantage of having user A's profile of personal information in the accounts database 122 is that the telephony control server 120 may initiate telephone connections involving user A. Referring to FIG. 4, user A may display a list of user A's contacts on the display 111 using a contacts application (shown in FIG. 2B) in the PID 210. User A's contact list includes an entry for user B. After selecting the entry, the PID 210 may use a data connection that is the same or similar to the data connection 250 of FIG. 3 to send a message to call user B to the telephony control server 120. The telephony control server 120 receives the message and hardware and software components in the server 120 attempt to establish the telephone connection.

Referring to FIG. 5, the network telephony server 120 sends a signal over a second data connection 252 to user B's gateway 222 and to user A's gateway 233. The two gateways, 222, 233 signal the respective user telephones 227, 226 the respective central offices 224, 225 using well known PSTN signaling methods. The data network telephony server 120 also establishes a third data channel 253 between

Bright House Networks - Ex. 1108, Page 602

user A's Gateway 223 and user B's Gateway 222. The third data connection 253 is used to carry digitized voice signals in data packets in accordance with selected network data transport protocols.

The third data channel 253 in FIG. 5 uses UDP over IP to transport the data, and RTP to format voice signals represented as G.711 (but other protocols such as G.723.1) data samples. The specific protocols used, are not important as any suitable protocol may be used for transport and/or data formatting. When user A picks up his telephone 227 and when user B picks up his telephone 226, they may communicate by telephone.

One advantage of using the PID 210 to control the data network telephony server 120 is that the system and methods may be enhanced to provide personal mobility. Referring to FIG. 6, user A may be at a location that is away from user A's telephone227. In addition, user A may be near a third telephone 237. User A may enter the telephone number for the telephone 237 into his profile of personal information on the wireless PID 210, as shown in the display 111. User A may then use the wireless PID 210 to send a message to set user A's phone number to *X_Number* to the telephony control server 120. The telephony control server 120 receives the message and modifies user A's account in the accounts database 122 to reflect that user A's phone number is now *X_Number*.

The telephony control server 120 may now divert telephone calls for user A from his original telephone *A_Number* to the telephone number for the telephone that is closest to him *X_Number*. Referring to FIG. 7, the user displays user A's contacts on the display 111 of the PID 210. By selecting the "user B" entry, the wireless PID 210 may send a message to caller user B to the telephony control server 120. The telephony control server 120 signals the gateway 223 to call the telephone 227 having the telephone number *X_Number*. The telephony control server 120 also signals the gateway 222 for user B to call user B's telephone 226. The telephony control server 120 may send a message to the gatekeeper 219 to determine which gateways are closest to usr A's telephone 237 and user B's telephone 226. The telephony control server 120 may have prior knowledge as to the location of the gatekeeper 241, or may send out a gatekeeper request message over the data network 206 to seek a gatekeeper to handle a call.

Bright House Networks - Ex. 1108, Page 603

The gatekeeper 223 places a PSTN telephone call to the telephone 227 closest to user A and having the telephone number *X_Number*. The gateway 222 places a PSTN telephone call to user B's telephone 226. The gateways 222, 223 also establish a data channel 257 to communicate voice over data packets between the two gateways 222, 223. User A may now speak with user B over the data channel 257.

FIG. 3 through 7 illustrates systems and methods for controlling telephony service using a wireless PID 210 in accordance with one embodiment of the present invention. The present invention however, is not limited to any system or method shown in FIGS. 3 through 7.

FIG. 8 shows a flow chart that illustrates how a user may modify his/her telephony user account in a telephony control server 120 using a wireless PID 210 (both shown in FIG. 2).

At step 400 user enters a telephone number into his/her profile of personal information in the PID 210. At step 402, the user initiates a wireless connection to the telephony control server. The PID 210 sends a message to the telephony control server 120 to set the PID user's telephone number in the user's account to the telephone number contained in the message, as shown in step 404. The telephony control server 120 receives the message at step 406 and retrieves user A's account from the accounts database 122 and modifies user A's telephone number contained in the message.

Once the telephony control server 120 modifies user A's account, telephone calls to user A will be directed to the telephone number in user A's account.

FIG. 9 shows an example of a method for initiating a telephone call between two PSTN telephones from the wireless PID 210. Starting at step 410, the user invokes a contacts application in the wireless PID 210 to select an entry for a person that the user wishes to call. At step 412, the user selects an entry and commands the wireless PID 210 to initiate a telephone call. At step 414, the wireless PID 210 initiates a wireless data connection to the telephony control server 120. At step 416, the wireless PID 210 sends a message to call the person whose telephone number is included in the message. At step 418, telephony control server 120 determines the gateway nearest to each party. Once the closest gateway is found, the data network telephony server 120 signals the gateways to make PSTN telephone calls to the

Bright House Networks - Ex. 1108, Page 604

telephone identified by the telephone numbers. At step 422, the gateways establish a voice over data channel over the data network. When the users pick up their telephones, the gateways connect their telephones to the voice over data channel so that they may begin conversing as in a normal telephone call.

While the invention has been described in conjunction with presently preferred embodiments of the invention, persons of skill in the art will appreciate that variations may be made without departure from the scope and spirit of the invention. For example, the access networks shown in FIG. 2A may comprise any other suitable type of local area network or service infrastructure.

In addition, protocols of various types are referenced throughout. While preferred and alternative embodiments may implement selected protocols, any suitable replacement protocol not mentioned, or any function not part of a protocol used to replace a corresponding function from a protocol may be implemented without departing from the scope of the invention.

This true scope and spirit is defined by the appended claims, interpreted in light of the foregoing.

Bright House Networks - Ex. 1108, Page 605

WE CLAIM:

1. A personal information device for controlling telephone service comprising:

a user interface comprising a display and a user input device;

a user profile having a telephone number entered by a user;

a communications function to establish a data communications channel over a wireless network to a telephony control server, the telephony control server containing the user's telephony account; and

an account update function to send a message over the data communication channel to the telephony control server, the message containing the user profile telephone number and a request to set the user's telephony account telephone number the user profile telephone number.

2. The PID of Claim 1 further comprising:

a contacts application operable to display a plurality of contact entries, each entry comprising a contact telephone number, the contacts application operable to send the contact telephone number over the data communications channel to the telephony control server with a message to call the contact telephone number.

3. A telephony control server comprising:

a network interface operable to provide data connectivity with a user accessible via a wireless network;

an accounts program to access a plurality of user accounts, the accounts program operable to receive a message to set a user telephone number, each user account containing a telephone number entry, the accounts program being operable to set the telephone number entry in response to the message;

a connection signaling function to receive a call message from the user and to establish a telephone connection between the user telephone number and a callee telephone number contained in the call message; and

the connection signaling function operable to initiate a telephone call having at least a portion of the telephone call connected via the data network.

Bright House Networks - Ex. 1108, Page 606

4. The telephony control server of Claim 3 further comprising:

a gateway locator to locate a user gateway closest to the user telephone number and to locate a callee gateway closest to the callee telephone number; wherein the connection signaling function initiates the portion of the call connected via the data network between the user gateway and the callee gateway.

5. A method for modifying a user telephone account having a telephone number entry using a wireless personal information device (PID) connected over a data network, the method comprising the steps of:

updating a user profile in the wireless PID to a user telephone number; and

sending a request to set the user telephone account to the user telephone number over a data communications channel to a telephony control server wherein the telephony control server updates the user telephone number entry to the user telephone number.

6. A method for initiating a data network telephone call using a wireless PID with a display comprising the steps of:

starting a contacts application to display a plurality of contact entries;

selecting one of the contact entries identifying a callee;

initiating a data communications channel to a telephony control server having a user telephone number;

sending a message to call the callee;

connecting a telephone call to the user; and

connecting the telephone call to the callee.

7. The method of Claim 6 wherein the step of connecting the telephone call to the callee includes the steps of locating a callee gateway closest to the user telephone number and sending a signal to call the callee by dialing via a callee's central office.

Bright House Networks - Ex. 1108, Page 607

FIG. 1

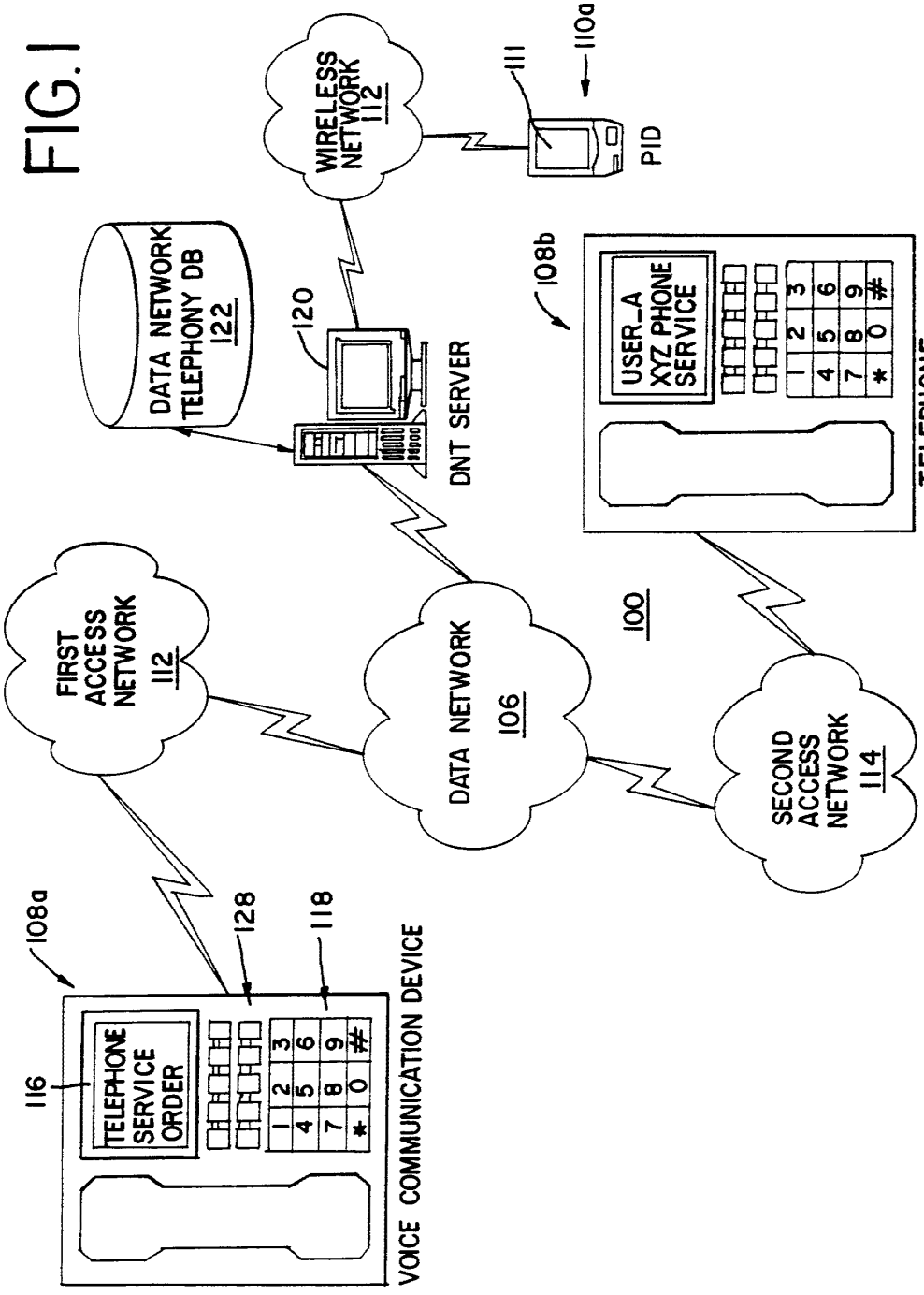

Bright House Networks - Ex. 1108, Page 608

SUBSTITUTE SHEET (RULE 26)

FIG. 2A

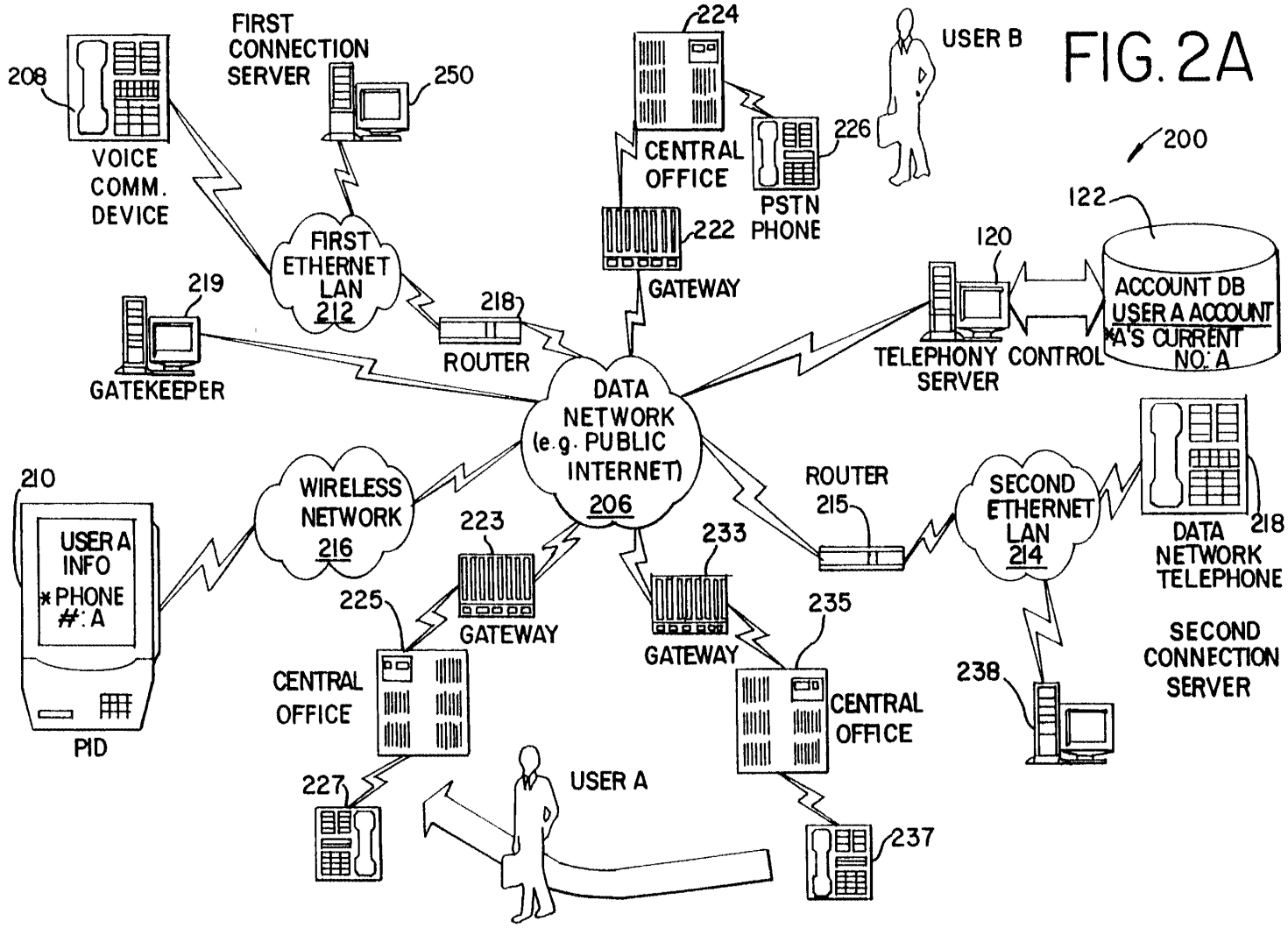

SUBSTITUTE SHEET (RULE 26)

FIG. 2B

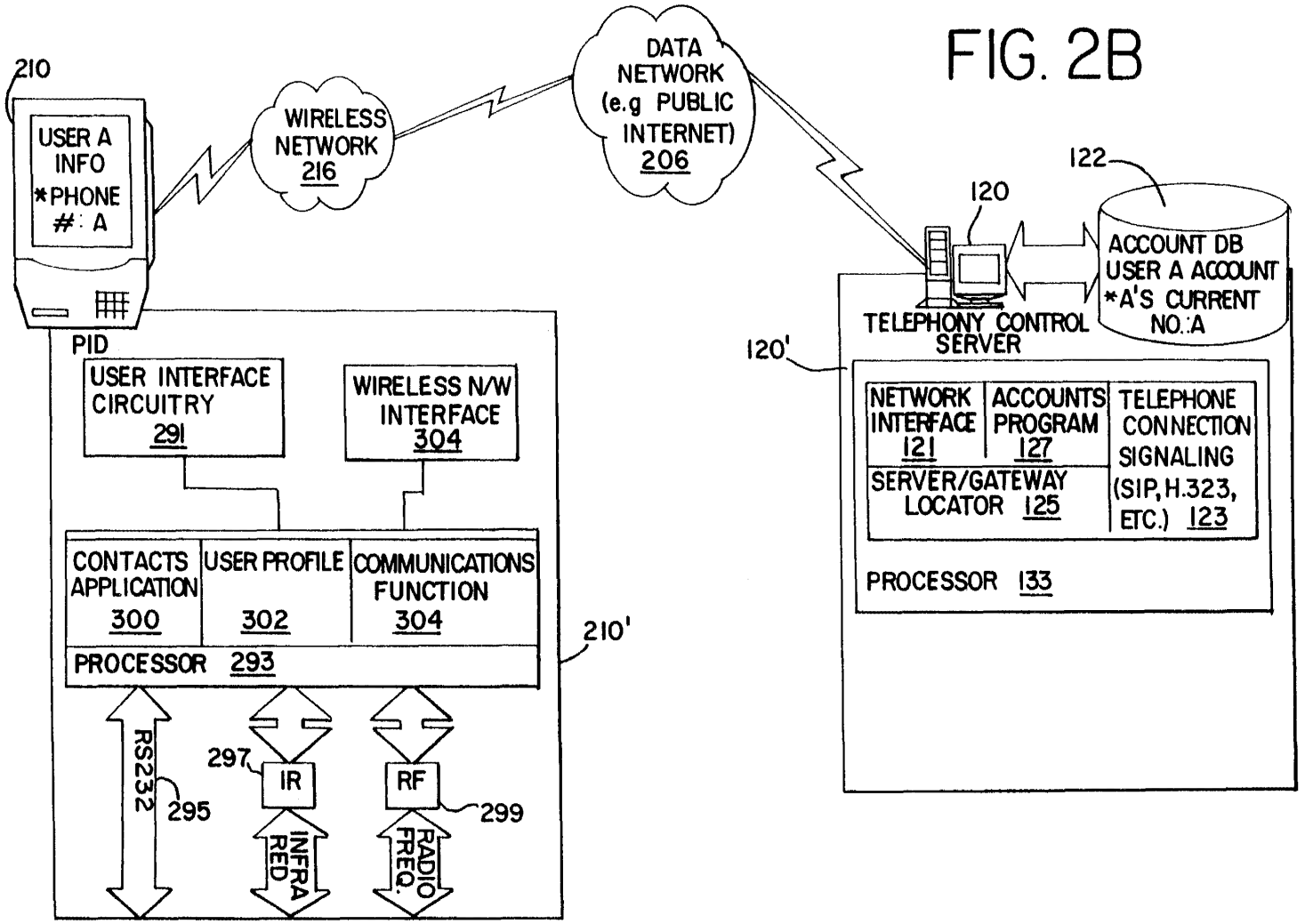

FIG. 3

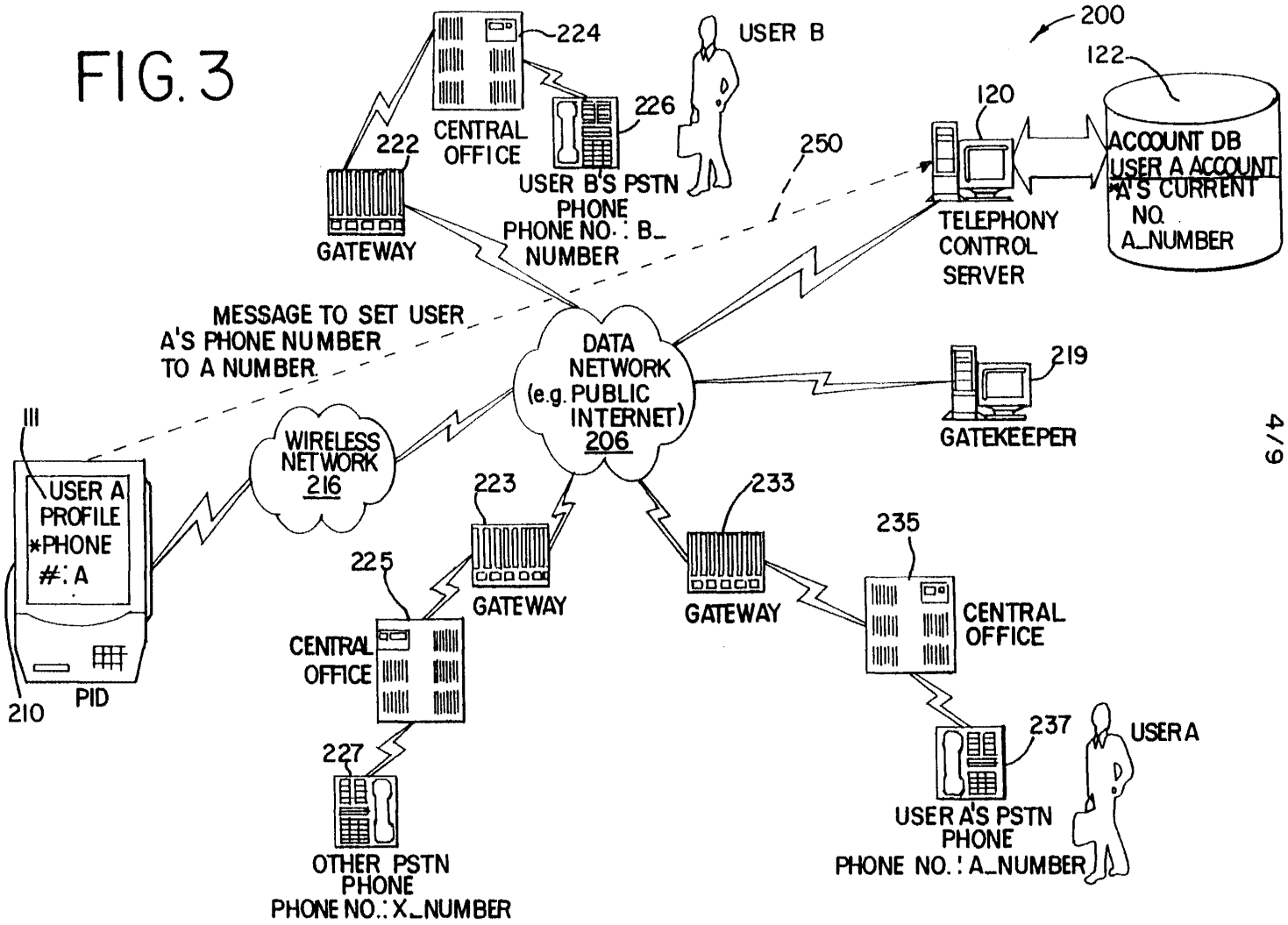
200
122
224
USER B
120
226
CENTRAL OFFICE
222
250
ACCOUNT DB
USER A ACCOUNT
A'S CURRENT
NO.
A_NUMBER
USER B'S PSTN PHONE
PHONE NO.: B_NUMBER
GATEWAY
TELEPHONY CONTROL SERVER
MESSAGE TO SET USER A'S PHONE NUMBER TO A NUMBER
DATA NETWORK (e.g. PUBLIC INTERNET) 206
219
GATEKEEPER
111
WIRELESS NETWORK 216
USER A PROFILE *PHONE #: A
223
233
235
225
GATEWAY
GATEWAY
CENTRAL OFFICE
CENTRAL OFFICE
210
PID
227
237
USER A
USER A'S PSTN PHONE
PHONE NO.: A_NUMBER
OTHER PSTN PHONE
PHONE NO.: X_NUMBER

FIG. 4

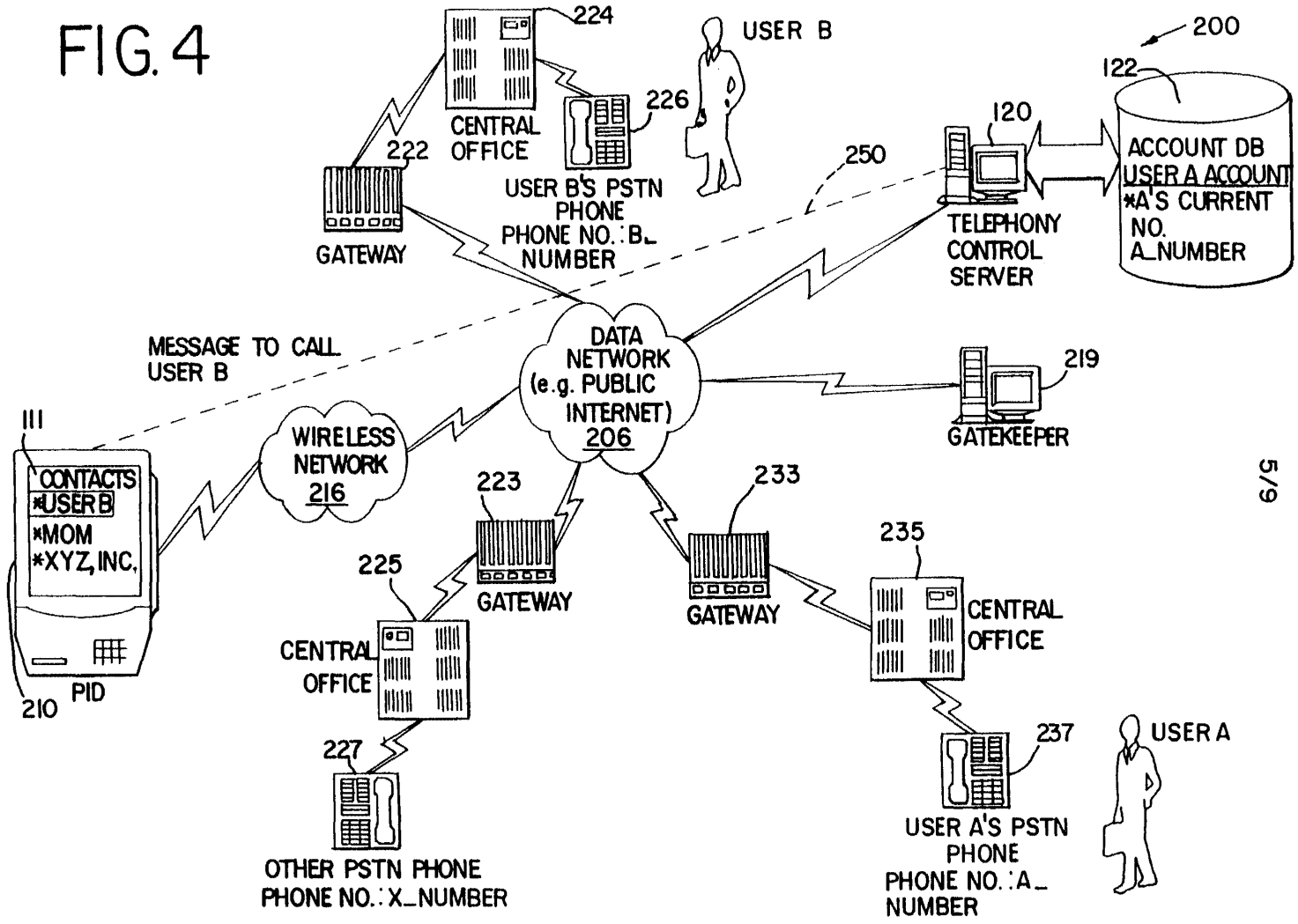
224
USER B
200
122
226
120
CENTRAL OFFICE
222
250
ACCOUNT DB
USER A ACCOUNT
*A'S CURRENT NO.
A_NUMBER
USER B'S PSTN PHONE
PHONE NO.: B_ NUMBER
GATEWAY
TELEPHONY CONTROL SERVER
MESSAGE TO CALL USER B
DATA NETWORK (e.g. PUBLIC INTERNET) 206
219
GATEKEEPER
111
WIRELESS NETWORK 216
CONTACTS
*USER B
*MOM
*XYZ, INC.
223
233
225
235
GATEWAY
GATEWAY
CENTRAL OFFICE
CENTRAL OFFICE
210
PID
227
237
USER A
USER A'S PSTN PHONE
PHONE NO.: A_ NUMBER
OTHER PSTN PHONE
PHONE NO.: X_NUMBER

FIG.5

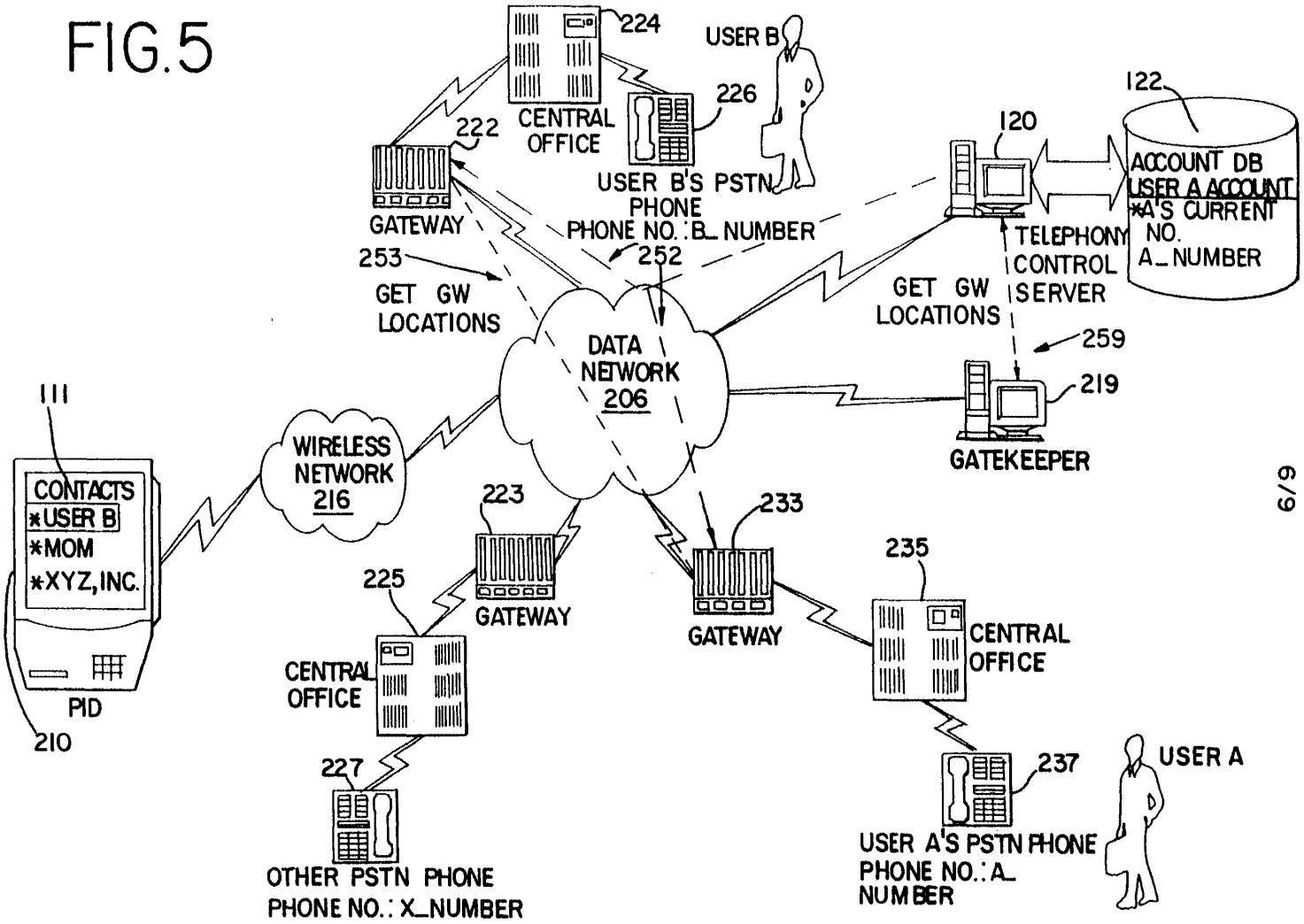
224
USER B
226
CENTRAL OFFICE
222
USER B'S PSTN PHONE
PHONE NO.: B_NUMBER
GATEWAY
253
GET GW LOCATIONS
252
DATA NETWORK 206
120
122
ACCOUNT DB
USER A ACCOUNT
*A'S CURRENT NO.
A_NUMBER
TELEPHONY CONTROL SERVER
GET GW LOCATIONS
259
219
GATEKEEPER
111
CONTACTS
*USER B
*MOM
*XYZ, INC.
PID
210
WIRELESS NETWORK 216
223
GATEWAY
225
CENTRAL OFFICE
227
OTHER PSTN PHONE
PHONE NO.: X_NUMBER
233
GATEWAY
235
CENTRAL OFFICE
237
USER A
USER A'S PSTN PHONE
PHONE NO.: A_NUMBER

FIG. 6

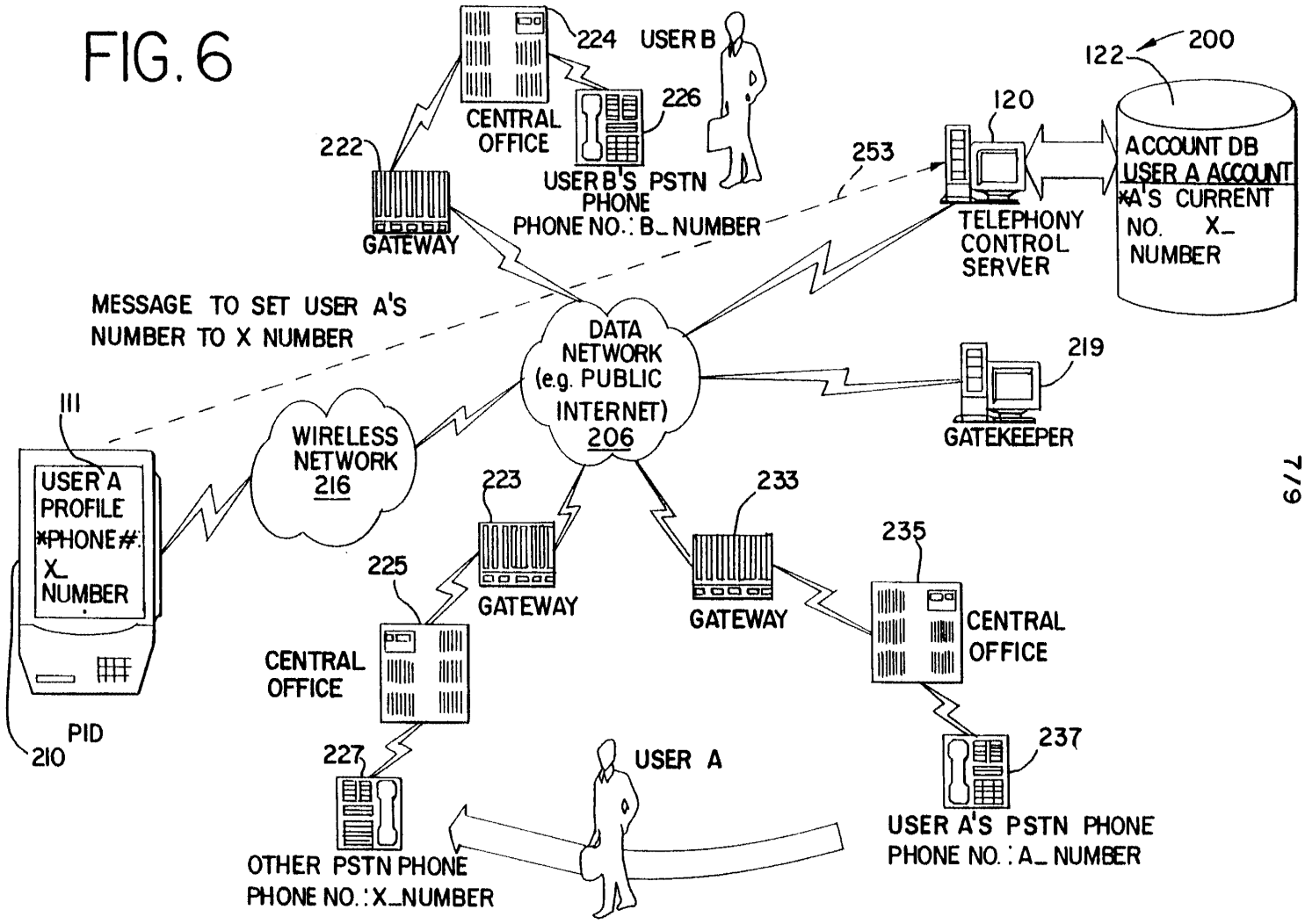
224
USER B
CENTRAL OFFICE
226
222
USER B'S PSTN PHONE
PHONE NO.: B_NUMBER
GATEWAY
253
120
122
200
ACCOUNT DB
USER A ACCOUNT
*A'S CURRENT NO. X_ NUMBER
TELEPHONY CONTROL SERVER
MESSAGE TO SET USER A'S NUMBER TO X NUMBER
DATA NETWORK (e.g. PUBLIC INTERNET) 206
219
GATEKEEPER
111
WIRELESS NETWORK 216
USER A PROFILE *PHONE#: X_ NUMBER
PID
210
223
233
235
225
GATEWAY
GATEWAY
CENTRAL OFFICE
CENTRAL OFFICE
227
USER A
237
OTHER PSTN PHONE
PHONE NO.: X_NUMBER
USER A'S PSTN PHONE
PHONE NO.: A_NUMBER

FIG. 7

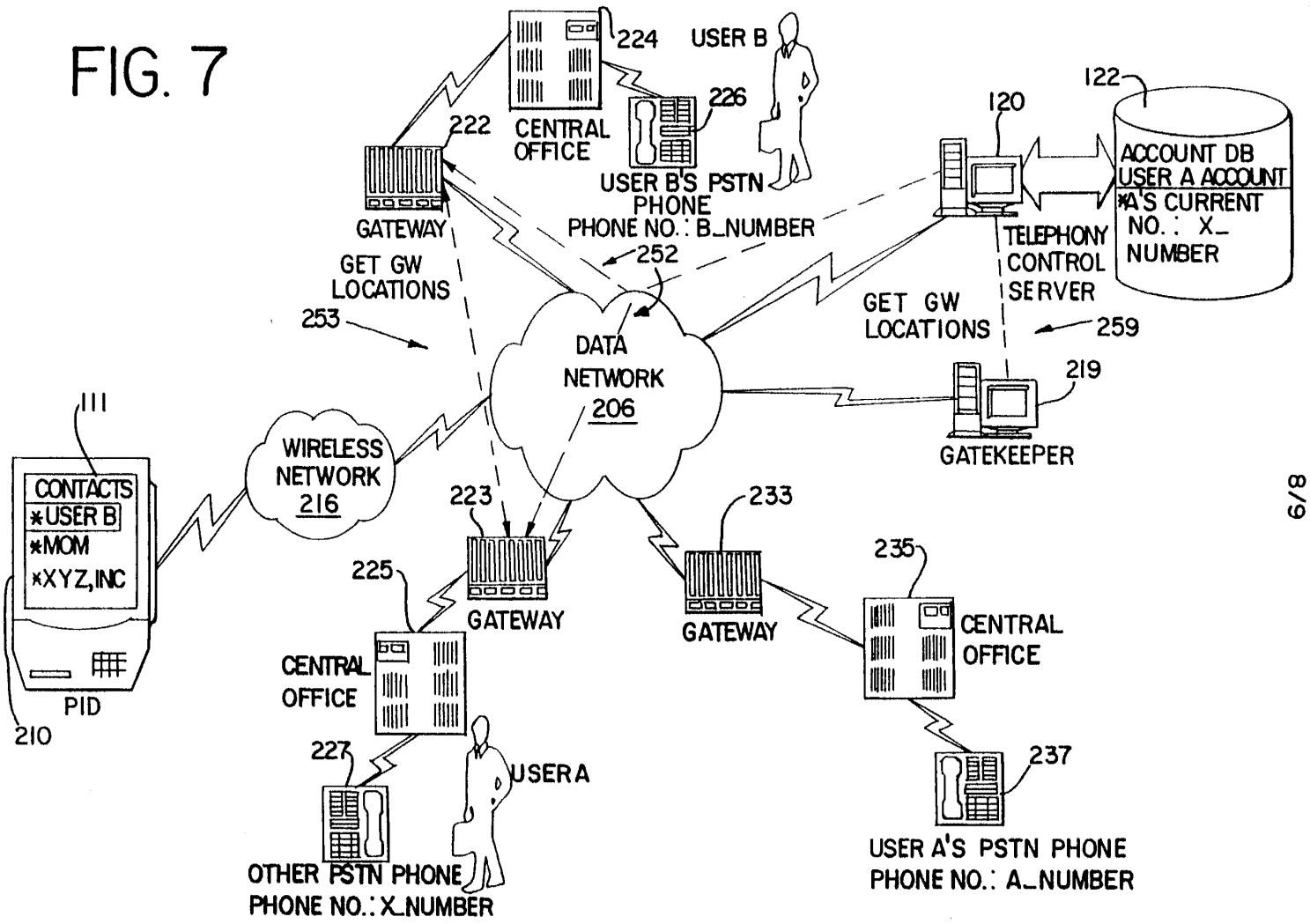
224
USER B
226
CENTRAL OFFICE
222
USER B'S PSTN PHONE
PHONE NO.: B_NUMBER
GATEWAY
252
GET GW LOCATIONS
253
DATA NETWORK 206
120
122
ACCOUNT DB
USER A ACCOUNT
*A'S CURRENT NO.: X_NUMBER
TELEPHONY CONTROL SERVER
GET GW LOCATIONS
259
219
GATEKEEPER
111
CONTACTS
*USER B
*MOM
*XYZ,INC
PID
210
WIRELESS NETWORK 216
223
225
GATEWAY
CENTRAL OFFICE
227
USER A
OTHER PSTN PHONE
PHONE NO.: X_NUMBER
233
GATEWAY
235
CENTRAL OFFICE
237
USER A'S PSTN PHONE
PHONE NO.: A_NUMBER

FIG. 8

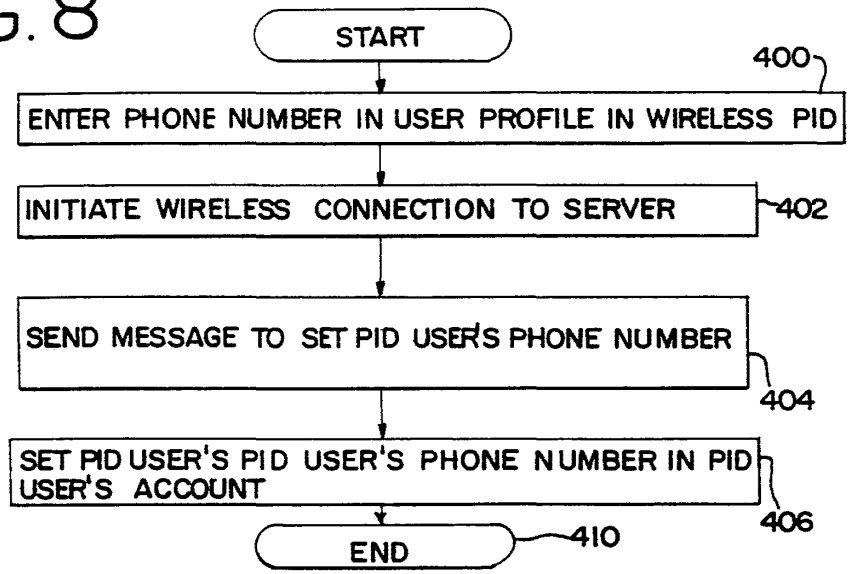
START
400
ENTER PHONE NUMBER IN USER PROFILE IN WIRELESS PID
INITIATE WIRELESS CONNECTION TO SERVER
402
SEND MESSAGE TO SET PID USER'S PHONE NUMBER
404
SET PID USER'S PID USER'S PHONE NUMBER IN PID USER'S ACCOUNT
406
END
410

FIG. 9

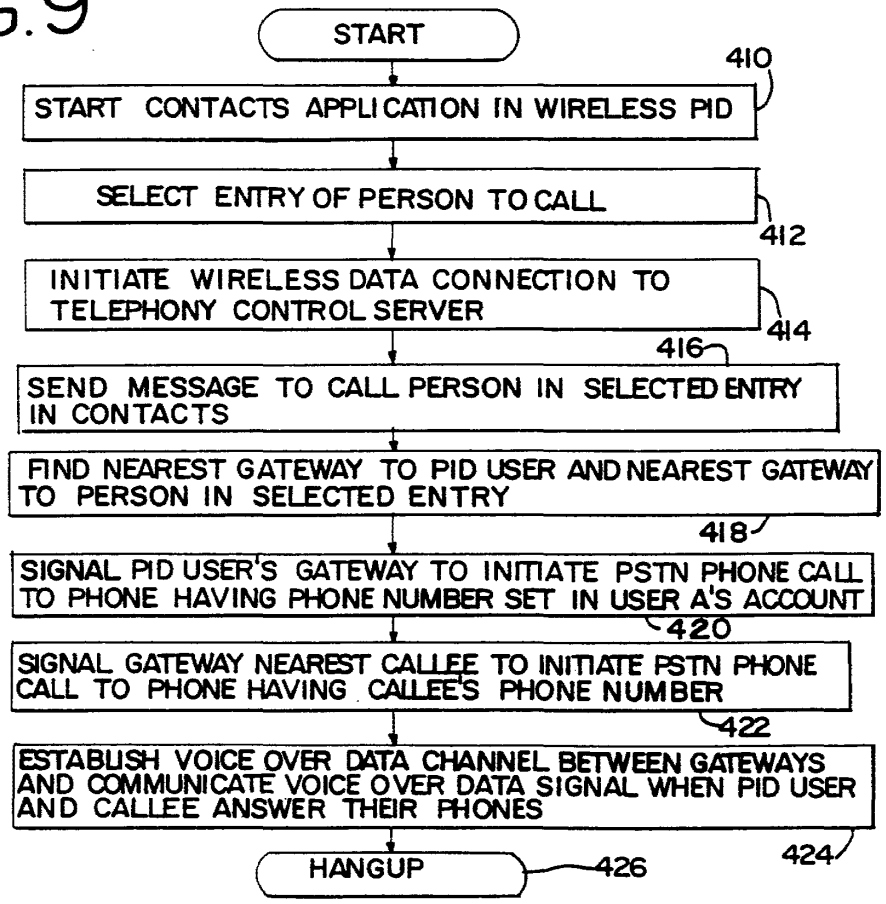
START
410
START CONTACTS APPLICATION IN WIRELESS PID
SELECT ENTRY OF PERSON TO CALL
412
INITIATE WIRELESS DATA CONNECTION TO TELEPHONY CONTROL SERVER
414
416
SEND MESSAGE TO CALL PERSON IN SELECTED ENTRY IN CONTACTS
FIND NEAREST GATEWAY TO PID USER AND NEAREST GATEWAY TO PERSON IN SELECTED ENTRY
418
SIGNAL PID USER'S GATEWAY TO INITIATE PSTN PHONE CALL TO PHONE HAVING PHONE NUMBER SET IN USER A'S ACCOUNT
420
SIGNAL GATEWAY NEAREST CALLEE TO INITIATE PSTN PHONE CALL TO PHONE HAVING CALLEE'S PHONE NUMBER
422
ESTABLISH VOICE OVER DATA CHANNEL BETWEEN GATEWAYS AND COMMUNICATE VOICE OVER DATA SIGNAL WHEN PID USER AND CALLEE ANSWER THEIR PHONES
424
HANGUP
426

INTERNATIONAL SEARCH REPORT

Int. ional Application No
PCT/US 00/26618

A. CLASSIFICATION OF SUBJECT MATTER
IPC 7 H04M7/00 H04M3/42

According to International Patent Classification (IPC) or to both national classification and IPC

B. FIELDS SEARCHED

Minimum documentation searched (classification system followed by classification symbols)
IPC 7 H04M

Documentation searched other than minimum documentation to the extent that such documents are included in the fields searched

Electronic data base consulted during the international search (name of data base and, where practical, search terms used)
EPO-Internal, WPI Data, PAJ, INSPEC, COMPENDEX, IBM-TDB

C. DOCUMENTS CONSIDERED TO BE RELEVANT

Category °	Citation of document, with indication, where appropriate, of the relevant passages	Relevant to claim No.
X	WO 99 12365 A (WINROTH MATS OLOF ;HYLLANDER KLAS (SE); TELIA AB (SE)) 11 March 1999 (1999-03-11) page 11, line 31 -page 18, line 22 ---	1-7
A	PEPPER D J ET AL: "The CallManager system: A platform for intelligent telecommunications services" SPEECH COMMUNICATION,NL,ELSEVIER SCIENCE PUBLISHERS, AMSTERDAM, vol. 23, no. 1-2, 1 October 1997 (1997-10-01), pages 129-139, XP004117214 ISSN: 0167-6393 the whole document --- -/--	1-7

[X] Further documents are listed in the continuation of box C.

[X] Patent family members are listed in annex.

° Special categories of cited documents :

"A" document defining the general state of the art which is not considered to be of particular relevance

"E" earlier document but published on or after the international filing date

"L" document which may throw doubts on priority claim(s) or which is cited to establish the publication date of another citation or other special reason (as specified)

"O" document referring to an oral disclosure, use, exhibition or other means

"P" document published prior to the international filing date but later than the priority date claimed

"T" later document published after the international filing date or priority date and not in conflict with the application but cited to understand the principle or theory underlying the invention

"X" document of particular relevance; the claimed invention cannot be considered novel or cannot be considered to involve an inventive step when the document is taken alone

"Y" document of particular relevance; the claimed invention cannot be considered to involve an inventive step when the document is combined with one or more other such documents, such combination being obvious to a person skilled in the art.

"&" document member of the same patent family

Date of the actual completion of the international search	Date of mailing of the international search report
7 February 2001	19/02/2001

Name and mailing address of the ISA	Authorized officer
European Patent Office, P.B. 5818 Patentlaan 2 NL – 2280 HV Rijswijk Tel. (+31-70) 340-2040, Tx. 31 651 epo nl, Fax: (+31-70) 340-3016	Megalou, M

1

Form PCT/ISA/210 (second sheet) (July 1992)

Bright House Networks - Ex. 1108, Page 617

INTERNATIONAL SEARCH REPORT

In. ational Application No
PCT/US 00/26618

C.(Continuation) DOCUMENTS CONSIDERED TO BE RELEVANT

Category °	Citation of document, with indication,where appropriate, of the relevant passages	Relevant to claim No.
A	DALGIC I ET AL: "TRUE NUMBER PORTABILITY AND ADVANCED CALL SCREENING IN A SIP-BASED IP TELEPHONY SYSTEM" IEEE COMMUNICATIONS MAGAZINE,IEEE SERVICE CENTER. PISCATAWAY, N.J,US, vol. 37, no. 7, July 1999 (1999-07), pages 96-101, XP000835310 ISSN: 0163-6804 the whole document ---	1-7
A	US 5 894 595 A (FOLADARE MARK JEFFREY ET AL) 13 April 1999 (1999-04-13) abstract ---	
A	WO 97 33421 A (BELL COMMUNICATIONS RES) 12 September 1997 (1997-09-12) page 23, line 12 -page 32, line 2 -----	

1

Form PCT/ISA/210 (continuation of second sheet) (July 1992)

Bright House Networks - Ex. 1108, Page 618

INTERNATIONAL SEARCH REPORT

Information on patent family members

Int tional Application No
PCT/US 00/26618

Patent document cited in search report	Publication date	Patent family member(s)	Publication date
WO 9912365 A	11-03-1999	SE 509926 C	22-03-1999
		EP 1008266 A	14-06-2000
		NO 20000902 A	27-04-2000
		SE 9703121 A	01-03-1999
US 5894595 A	13-04-1999	CN 1128477 A	07-08-1996
		EP 0696152 A	07-02-1996
		JP 8065749 A	08-03-1996
WO 9733421 A	12-09-1997	AU 706931 B	01-07-1999
		AU 5184896 A	22-09-1997

Form PCT/ISA/210 (patent family annex) (July 1992)

(12) INTERNATIONAL APPLICATION PUBLISHED UNDER THE PATENT COOPERATION TREATY (PCT)

(19) World Intellectual Property Organization
International Bureau

(43) International Publication Date
5 April 2001 (05.04.2001)

PCT

(10) International Publication Number
WO 01/24502 A1

(51) International Patent Classification[7]: H04M 7/00

(21) International Application Number: PCT/US00/26649

(22) International Filing Date:
27 September 2000 (27.09.2000)

(25) Filing Language: English

(26) Publication Language: English

(30) Priority Data:
09/406,066 27 September 1999 (27.09.1999) US

(63) Related by continuation (CON) or continuation-in-part (CIP) to earlier application:
US 09/406,066 (CON)
Filed on 27 September 1999 (27.09.1999)

(71) Applicant *(for all designated States except US)*: **3COM CORPORATION** [US/US]; 3800 Golf read, Rolling Meadows, IL 60008 (US).

(72) Inventors; and

(75) Inventors/Applicants *(for US only)*: **SCHUSTER, Guido, M.** [CH/US]; Apartment 408, 1433 Perry Street, Des Plaines, IL 60016 (US). **DEAN, Frederick, D.** [US/US]; 2311 N. Greenview Avenue, Chicago, IL 60614 (US). **SIDHU, Ikhlaq, S.** [US/US]; 403 River Grove Lane, Vernon Hills, IL 60061 (US). **MAHLER, Jerry, J.** [US/US]; 20 Country Club Drive #B, Prospect Heights, IL 60070 (US). **SIDHU, Sagan, S.** [US/US]; 403 River Grove Lane, Vernon Hills, IL 60061 (US).

(74) Agent: **PEREZ, Enrique**; McDonnell Boehnen Hulbert & Berghoff, 300 South Wacker Drive, 32nd floor, Chicago, IL 60606 (US).

(81) Designated States *(national)*: AE, AG, AL, AM, AT, AU, AZ, BA, BB, BG, BR, BY, BZ, CA, CH, CN, CR, CU, CZ, DE, DK, DM, DZ, EE, ES, FI, GB, GD, GE, GH, GM, HR, HU, ID, IL, IN, IS, JP, KE, KG, KP, KR, KZ, LC, LK, LR, LS, LT, LU, LV, MA, MD, MG, MK, MN, MW, MX, MZ, NO, NZ, PL, PT, RO, RU, SD, SE, SG, SI, SK, SL, TJ, TM, TR, TT, TZ, UA, UG, US, UZ, VN, YU, ZA, ZW.

[Continued on next page]

(54) Title: SYSTEM AND METHOD FOR SERVICE PROVIDER CONFIGURATION OF TELEPHONES IN A DATA NETWORK TELEPHONY SYSTEM

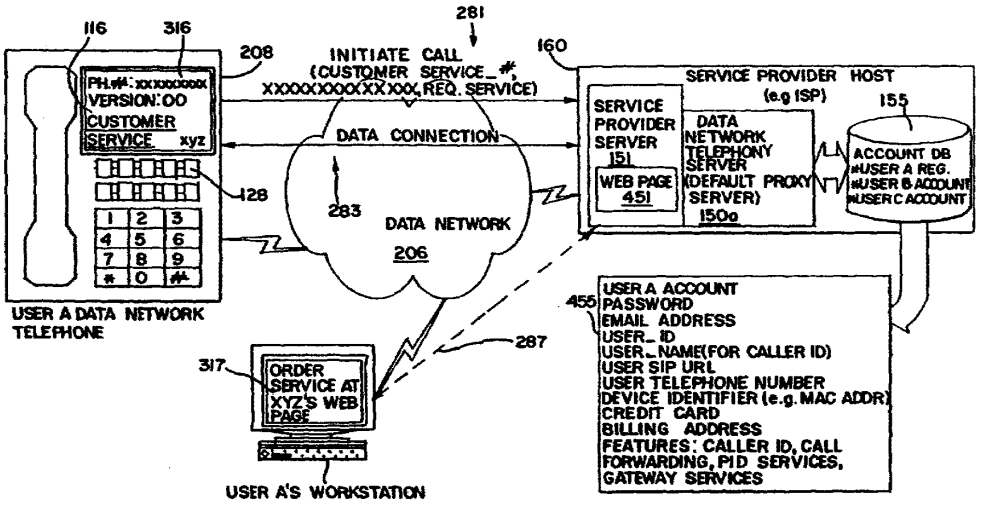

(57) Abstract: A system and method for providing service provider configured telephone service to a user of a data network telephone. The user connects a data network telephone to the data network. The data network telephone sends a request to register for service with a telephone connection server. The request includes a version identifier identifying the configuration version as having a particular set of functions and features for the data network telephone. The telephone connection server determines whether the version of the configuration is up to date. If it is not it may replace the configuration of the data network telephone. The telephony connection server may also query the user as to whether or not to update the configuration.

WO 01/24502 A1

(84) Designated States *(regional)*: ARIPO patent (GH, GM, KE, LS, MW, MZ, SD, SL, SZ, TZ, UG, ZW), Eurasian patent (AM, AZ, BY, KG, KZ, MD, RU, TJ, TM), European patent (AT, BE, CH, CY, DE, DK, ES, FI, FR, GB, GR, IE, IT, LU, MC, NL, PT, SE), OAPI patent (BF, BJ, CF, CG, CI, CM, GA, GN, GW, ML, MR, NE, SN, TD, TG).

Published:

— *With international search report.*

— *Before the expiration of the time limit for amending the claims and to be republished in the event of receipt of amendments.*

For two-letter codes and other abbreviations, refer to the "Guidance Notes on Codes and Abbreviations" appearing at the beginning of each regular issue of the PCT Gazette.

SYSTEM AND METHOD FOR SERVICE PROVIDER CONFIGURATION OF TELEPHONES IN A DATA NETWORK TELEPHONY SYSTEM

BACKGROUND OF THE INVENTION

A. Field of the Invention

The present invention is related to field of telecommunications, and more particularly to a system and method for providing communication services over a network. .

B. Description of the Related Art and Advantages of the Present Invention

For many years, telephone service providers on the Public Switched Telephone Network (PSTN) provided their customers nothing more than a telephone line to use to communicate with other subscribers. Over time, telephone service providers have enhanced their service by providing Custom Local Area Signaling Service (CLASS) features to their customers. Similar communication services are provided by a Private Branch Exchange (PBX), which is typically implemented in a nonresidential setting.

The CLASS features permit customer subscribers of the features to tailor their telephone service according to individual needs. Some of the well known CLASS features are:

- Call blocking: The customer may specify one or more numbers from which he or she does not want to receive calls. A blocked caller will hear a rejection message, while the callee will not receive any indication of the call.
- Call return: Returns a call to the most recent caller. If the most recent caller is busy, the returned call may be queued until it can be completed.
- Call trace: Allows a customer to trigger a trace of the number of the most recent caller.
- Caller ID: The caller's number is automatically displayed during the silence period after the first ring. This feature requires the customer's line to be equipped with a device to read and display the out-of-band signal containing the number.
- Caller ID blocking: Allows a caller to block the display of their number in a callee's caller ID device.

Bright House Networks - Ex. 1108, Page 622

• Priority ringing: Allows a customer to specify a list of numbers for which, when the customer is called by one of the numbers, the customer will hear a distinctive ring.

• Call forwarding: A customer may cause incoming calls to be automatically forwarded to another number for a period of time.

A customer subscriber to a CLASS feature may typically activate and/or de-activate a CLASS feature using "*" directives (e.g., *69 to automatically return a call to the most recent caller). CLASS features may also be implemented with the use of out-of-band data. CLASS feature data is typically transmitted between local Class-5 switches using the Signaling System 7 (SS7).

Local Exchange Carriers (LECs) and other similar organizations maintain CLASS offices that typically contain a database entry for each customer. The database allows specification of the CLASS features a customer has subscribed to, as well as information, such as lists of phone numbers, associated with those features. In some cases, customers may edit these lists on-line via a touch-tone interface. A list of all phone numbers that have originated or terminated a call with each customer is often included in the CLASS office database. For each customer, usually only the most recent number on this list is stored by the local Class-5 switch.

A Private Branch Exchange (PBX), is a stored program switch similar to a Class-5 switch. It is usually used within a medium-to-large-sized business for employee telephony service. Since a PBX is typically operated by a single private organization, there exists a wide variety of PBX services and features. Custom configurations are common, such as integration with intercom and voice mail systems. PBX's typically support their own versions of the CLASS features, as well as other features in addition to those of CLASS. Most PBX features are designed to facilitate business and group communications.

A summary of typical PBX features includes:

• Call transfer: An established call may be transferred from one number to another number on the same PBX.

• Call forwarding: In addition to CLASS call forwarding, a PBX number can be programmed to automatically transfer a call to another number when the first number does not answer or is busy.

Bright House Networks - Ex. 1108, Page 623

- Camp-on queuing: Similar to PSTN call return, a call to a busy number can be queued until the callee can accept it. The caller can hang up their phone and the PBX will ring them when the callee answers.
- Conference calling: Two or more parties can be connected to one another by dialing into a conference bridge number.
- Call parking: An established call at one number can be put on hold and then reestablished from another number. This is useful when call transfer is not warranted.
- Executive override: A privileged individual can break into an established call. After a warning tone to the two participants, the call becomes a three-way call.

While the CLASS and PBX features have enhanced the offerings of service providers that use the PSTN, the features are nevertheless limited in their flexibility and scope. The effect to the user is that the features become clumsy and difficult to use. For example, in order to use the Call Forwarding function, the user must perform the steps at the user's own phone prior to moving to the location of the telephone to which calls will be forwarded. A more desirable approach, from the standpoint of usefulness to the user, would be to perform the steps at the telephone to which calls will be forwarded.

Much of the lack of flexibility of the PSTN features is due to the lack of flexibility in the PSTN system itself. One problem with the PSTN is that the terminal devices (e.g. telephones) lack intelligence and operate as "dumb" terminals on a network having the intelligence in central offices. Most PSTN telephones are limited in functional capability to converting the analog signals they receive to sound and converting the sound from the handset to analog signals.

Some PSTN telephones have a display device and a display function to display specific information communicated from intelligent agents in the PSTN network using the PSTN signaling architecture. For example, some PSTN telephones have a display function to enable the Caller ID feature. Even such PSTN telephones are limited however by the closed PSTN signaling architecture, which prohibits access by the PSTN telephones to the network signaling protocols. The display functions are effectively limited to displaying text, again, as a "dumb" terminal.

The Internet presents a possible solution for distributing intelligence to telephony terminal devices. In Internet telephony, digitized voice is treated as data

Bright House Networks - Ex. 1108, Page 624

and transmitted across a digital data network between a telephone calls' participants. One form of Internet telephony uses a telephony gateway/terminal where IP telephony calls are terminated on the network. PSTN telephones are connected by a subscriber line to the gateway/terminal at the local exchange, or at the nearest central office. This form of Internet telephony provides substantial cost savings for users. Because the PSTN portion used in Internet telephony calls is limited to the local lines on each end of the call, long distance calls may be made for essentially the cost of a local call. Notwithstanding the costs savings provided by this form of Internet telephony, it is no more flexible than the PSTN with respect to providing enhancements and features to the basic telephone service.

In another form of Internet telephony, telephones are connected to access networks that access the Internet using a router. The telephones in this form of Internet telephony may be substantially more intelligent than typical PSTN telephones. For example, such a telephone may include substantially the computer resources of a typical personal computer.

It would be desirable to incorporate CLASS and PBX features into a data network telephony system that uses a data network such as the Internet.

It would be desirable to provide new features and enhancements to telephony service that accommodates and conforms to users' needs.

It would also be desirable to provide features and capabilities to telephone service that create new opportunities for users and for service providers.

The present invention addresses the above needs by providing a system in a data network telephony system, such as for example, the Internet, that provides a way for users to make brand new telephones usable without having to wait for days while the telephone company programs an account. The embodiments of the present invention may also be used to modify existing telephone accounts to incorporate new features, or features that may be desired for a limited amount of time. Alternative embodiments are provided, some of which address systems and methods that are simple and some of which address systems and methods that are completely user configurable.

Bright House Networks - Ex. 1108, Page 625

BRIEF DESCRIPTION OF THE DRAWINGS

Presently preferred embodiments of the invention are described below in conjunction with the appended drawing figures, wherein like reference numerals refer to like elements in the various figures, and wherein:

FIG. 1 is block diagram of a data network telephony system for providing telephony and enhanced telephony services in accordance with embodiments of the present invention;

FIG. 2A shows one embodiment of the system of FIG. 1 showing examples of access to data network telephony service providers;

FIG. 2B shows one example of one of the data network telephones in FIG. 2A;

FIG. 3A is a block diagram showing the interaction between components in accordance with one example of a system and method for configuring a data network telephone for service in the data network telephony system in FIG. 2A;

FIG. 3B is a block diagram showing one example of the interaction between components in the embodiment shown in FIG. 4A to update the data network telephone version;

FIG. 3C is a block diagram showing one example of the interaction between components in the embodiment shown in FIG. 4A when registration is complete;

FIG. 4A is a block diagram showing one example of the interaction between components in the embodiment shown in FIG. 4A to provision the data network telephone version with a voice account;

FIG. 4B is a depiction of a sample screen for ordering telephone service for the data network telephone of FIG. 5A;

FIG. 4C is a block diagram showing the interaction between components in the embodiment shown in FIG. 4A to confirm service;

FIG. 4D is a depiction of a sample screen for confirming telephone service for the data network telephone of FIG. 5A;

FIG. 5 is a block diagram showing the interaction between components in accordance with an example of a system and method for communicating by data network telephone in the data network telephony system in FIG. 2A;

FIG. 6 is a flowchart showing an example of a method for registering a data network telephone using the data network telephony system of FIG. 1;

Bright House Networks - Ex. 1108, Page 626

FIG. 7 is a flowchart showing an example of a method for provisioning a data network telephone in the data network telephony system of FIG. 1; and

FIG. 8 is a flowchart showing an example of confirming the telephony service ordered using the method described in FIG. 7.

Bright House Networks - Ex. 1108, Page 627

DETAILED DESCRIPTION OF THE PREFERRED EMBODIMENT

The following references to patent applications filed concurrently herewith are incorporated be reference:

* "System and Method for Controlling Telephone Service Using a Wireless Personal Information Device" to Schuster, et al.
* "System and Method for Advertising Using Data Network Telephone Connections" to Schuster, et al.
* "System and Method for Providing User-Configured Telephone Service in a Data Network Telephony System" to Sidhu, et al.
* "System and Method for Accessing a Network Server Using a Portable Information Device Through a Network Based Telecommunication System" to Schuster, et al.
* "System and Method for Interconnecting Portable Information Devices Through a Network Based Telecommunication System" to Schuster, et al.
* "System and Method for Enabling Encryption on a Telephony Network" to Schuster, et al.
* "System and Method for Using a Portable Information Device to Establish a Conference Call on a Telephony Network" to Schuster, et al.
* "System and Method for Associating Notes with a Portable Information Device on a Network Telephony Call" to Schuster, et al.
* "System and Method for Providing Shared Workspace Services Over a Telephony Network" to Schuster, et al.

The following additional references are also incorporated by reference herein:

* "Multiple ISP Support for Data Over Cable Networks" to Ali Akgun, et al.
* "Method and System for Provisioning Network Addresses in a Data-Over-Cable System" to Ali Akgun, et al., Serial No. 09/218,793.
* "Network Access Methods, Including Direct Wireless to Internet Access" to Yingchun Xu, et al., Serial No. 08/887,313

A. Data Network Telephony System

FIG. 1 is a block diagram showing an example of a system 100 for providing telephony services according to preferred embodiments of the present invention. The system includes a data network 106. A first voice communication device 108a communicates by a voice connection over the data network 106 by establishing the connection via first access network 112. The voice connection may be linked to a second voice communication device 108b which is accessed via a second access network 114.

The data network 106 in the system 100 typically includes one or more Local Area Networks (LANs) connected to one another or to a Wide-Area Network (WAN), such as an Internet Protocol (IP) network, to provide wide-scale data connectivity. The data network 106 may use Voice Over Packet (VOP) schemes in which voice signals are carried in data packets. The network 106 may also include a connection to the Public Switched Telephone Network (PSTN) to allow for voice connections using traditional circuit switching techniques. In one embodiment, the data network 106 may include one or more LANs such as Ethernet LANs and support data transport protocols for performing Voice-over-Internet-Protocol (VoIP) techniques on the Internet. For further details regarding VoIP, see the information available through the Internet Engineering Task Force (IETF) at www.ietf.org. In addition, an Internet Telephony gateway may be included within the system 100 to allow for voice connections to users connected by subscriber lines at a PSTN Central Office.

The first and second voice communication devices 108a and 108b typically include a voice input, a voice output and a voice processing system (described further below with reference to Figures 2B). The voice processing system converts voice sound from the voice input to digital data signals that are communicated on a voice connection over the data network. The voice processing system also converts digital data signals received from the voice connection to voice sound at the voice output. The voice communication devices 108a and 108b typically include a central processing unit and memory to store and process computer programs. Each voice communication device 108a and 108b typically includes a unique network address, such as an IP address, in memory to uniquely identify it to data network 106 and permit data packets to be routed to the device.

Bright House Networks - Ex. 1108, Page 629

A first personal information device (PID) 110a may be connected to the first voice communication device 108a and may communicate over the data network 106 by connecting via the access network 112. The PID 110a may communicate with a second PID 110b connected to the second voice communications device 108b. Connections by the PIDs 110a,b may be made using the IrDA protocol or the Bluetooth system. Point to point links may include an RS232 port.

The PIDs 110a,b each contain user attributes stored in a user information database. The user attributes may contain such information as a user identifier, schedule information, and other information that is associated with a user of the PIDs 110a,b. The PIDs 110a,b each include a user interface allowing a user to easily enter and retrieve data. In a preferred embodiment, the user interface inclues a pressure-sensitive display that allows a user to enter input with a sylus or other device. An example of a PID with such an interface is a PDA (Personal Digital Assistant), such as one of the Palm™ series of PDAs offered by 3Com Corporation. The PIDs 110a,b may include other functionality, such as wireless phone or two way radio functionality.

In one embodiment, the voice communication device 108a includes a handset with a receiver and transmitter similar or identical to handsets of traditional circuit-switched telephones. A console on which the handset sits may include the voice processing system, a display 116 and a keypad 118. The voice communication device 108a may also include a speed dial key set 128 programmed, or assigned to initiate connections to other voice communication devices that may be connected to the data network 106. In a preferred embodiment, the keys on the speed dial key set 128 may be programmed remotely by a message carried on a voice connection using a selected data transport protocol.

One example of the voice communication device 108a in a preferred embodiment is the NBX 100™ communication system phones offered by 3Com® Corporation, that has been modified, as described herein, to perform speed dial programming. In alternative embodiments, the voice communication device 108a may include any device having voice communications capabilities. For example, a personal computer having a microphone input and speaker output may also be used as

the voice communication device 108a. Other configurations for the user interface are also intended to be within the scope of the present invention.

The details relating to operation of the voice communication devices 108a and 108b depend on the nature of the data network 106 and the nature of the access networks 112, 114 connecting the voice communication devices 108a and 108b to each other and/or to other network entities. The access networks 112, 114 typically include any high bandwidth network adapted for data communications, i.e. a network having greater than 64,000 bits-per-second (bps) bandwidth. The access networks 112, 114 may link to the voice communication device 108a using an Ethernet LAN, a token ring LAN, a coaxial cable links (e.g. CATV adapted for digital communication), a digital subscriber line (DSL), twisted pair cable, fiberoptic cable, an integrated services digital network (ISDN) link, and wireless links. In embodiments that may not require a bandwidth greater than 64,000 bps, the access networks 112, 114 may also include the PSTN and link the voice communications device 108a by an analog modem. Further details regarding specific implementations are described below, with reference to FIGs. 2A and 2B.

B. System For Providing Provisioning and Configuration Services for a Telephone Using A Data Network Telephony System

One advantage of the data network telephony system 100 in FIG. 1 is that a user may begin making telephone calls by connecting the data network telephone to the access network. Alternatively, another advantage of the system 100 is that the user may plug the data network telephone to the access network to receive rudimental service, but obtain access to fully personalized, user-configured service account as well as to user-selected telephony enhancements and features.

A service provider server 120, connected to the data network 106, maintains user service accounts and manages the transport of data communications channels between voice communications devices 108a, 108b. A service provider database 122 stores the user accounts and other subscription information. In accordance with preferred embodiments, the service provider server 120 provides voice communications devices 108a, 108b with rudimentary service sufficient to connect to a service provider. The service provider server 120 then sets up user interactive connections to allow a user to configure a telephony user account. The user account is

Bright House Networks - Ex. 1108, Page 631

then activated substantially contemporaneously with the user interactive connection once the user submits the information. By substantially contemporaneously, it is meant that no substantial waiting period is needed before the user account may be used. In alternative embodiments, the service provider server 120 configures voice communications devices 108a, 108b with a full, ready-to-use configuration. The service provider host 120 also makes modifications to the user accounts easy and immediate in effect. A user may select features for temporary use. For example, a user may set up call forwarding to use while at a meeting for a week, and then disable it for other times.

1. Local Area Network As An Exemplary Access Network

FIG. 2A is a block diagram showing one example of the system 100 of FIG. 1 for providing customized communication services according to the present invention. The system 200 in FIG. 2A includes a local area network 212, connected to a data network 206 by a first router 228 and a cable network 214 connected to the data network 206 by a second router 238. Those of ordinary skill in the art will appreciate that, while the local area network 212 and the cable network 214 are shown in FIG. 2A as access networks, any other type of network may be used. For example, the local area network 212 and/or the cable network 214 may be replaced by ISDN, DSL, or any other high-speed data link.

The local area network 212 provides data connectivity to its members, such as a first data network telephone 208a, a second data network telephone 208b, a gateway 222 and a network telephony connection server 150a. The local area network 212 in FIG. 2A is an Ethernet LAN operating according to the IEEE 802.3 specification, which is incorporated by reference herein, however, any other type of local area network may be used. The local area network 212 uses the router 228 to provide the data network telephone 208a,b, the gateway 222 and the network telephony connection server 150a with access to the data network 206. For example, the router 228 may perform routing functions using protocol stacks that include the Internet Protocol and other protocols for communicating on the Internet.

The network telephony connection server 150a (hereinafter "telephony connection server") provides telephony registration, location and call initiation

Bright House Networks - Ex. 1108, Page 632

services for voice connections in which its members are a party. A user may register for telephony service with an administrator of the telephony connection server 150a and receive a user identifier and a telephone identifier. The user identifier and telephone identifier may be sequences of unique alphanumeric elements that callers use to direct voice connections to the user. The telephony connection server 150a registers users by storing user records in a data network telephony user database (hereinafter "user database") 152a in response to registration requests made by the user.

The call setup process and the user and telephone identifiers preferably conform to requirements defined in a call management protocol. The call management is used to permit a caller anywhere on the data network to connect to the user identified by the user identifier in a data network telephone call. A data network telephone call includes a call setup process and a voice exchange process. The call setup process includes steps and message exchanges that a caller and callee perform to establish the telephone call. The actual exchange of voice signals is performed by a data communications channel. The data communications channel incorporates other data transport and data formatting protocols, and preferably includes well-known data communications channels typically established over the Internet.

The call management protocol used in FIG. 2A is the Session Initiation Protocol (SIP), which is described in M. Handley et al., "SIP: Session Initiation Protocol," IETF RFC 2543, Mar. 1999, incorporated by reference herein, however, any other such protocol may be used. Other protocols include H.323, the Media Gateway Control Protocol (MGCP), etc.

The local area network 206 is connected to a gateway 222. The gateway 322 communicates with a PSTN central office 224, which provides PSTN service to a PSTN phone 226. The PSTN phone 226 is likely to be one of many PSTN phones serviced by the central office 224. Additional portions of a PSTN network have been omitted from FIG. 2A to improve clarity. The PSTN network is well known by those having skill in the art of telecommunications.

The telephony connection server 150a provides telephony service for mobile users. A user may be registered to use the first network telephone 208a (which is identified by its telephone identifier), but move to a location near the second data

Bright House Networks - Ex. 1108, Page 633

network telephone 208b. The user may re-register as the user of the second data network telephone 208b. Calls that identify the user by the user's user identifier may reach the user at the second network telephone 208b.

2. The Data Network Telephones

The data network telephones 208a, b are Ethernet phones which are telephones that include an Ethernet communications interface for connection to an Ethernet port. The Ethernet phones in FIG. 2A support the Internet Protocol (IP), using an IP address that is either statically configured or obtained by access to a Dynamic Host Configuration Protocol (DHCP) server.

FIG. 2B is a block diagram showing the data network telephone 208a connected to the local area network 212 in FIG. 2A. The data network telephone 208 in FIG. 2B is connected to the network 212 by a network interface 210. The network interface 210 may, for example, be a network interface card, and may be in the form of an integrated circuit. A bus 248 may be used to connect the network interface 210 with a processor 240 and a memory 242. Also connected to the processor are user interface circuitry 261 and three alternative (and all optional) interfaces to the Personal Information Device (PID) 110 (shown in FIG. 1).

A first interface 248 includes an RS-232 serial connection and associated coupling hardware and mechanisms. The first alternative interface 248 may, for example, be a docking cradle for a PDA, in which information can be transferred between the PDA and the data network telephone 208. The second alternative interface comprises a first connection 254, such as an RS-232 connection, along with infrared circuitry 250 for converting signals into infrared output and for accepting infrared input. An infrared interface 252 may also be included within the second alternative interface. The third alternative interface comprises a first connection 256, such as an RS-232 connection, along with radio-frequency circuitry 258 for converting signals into radio frequency output and for accepting radio frequency input. A radio frequency interface 259 may also be included as part of the third alternative interface.

The three alternative interfaces described above are merely examples, and additional means for implementing the interface between the data network telephone

Bright House Networks - Ex. 1108, Page 634

208 and the PID may also be used. Although three interfaces are shown in FIG. 2B, there may be only one such interface in the data network telephone 208. More than one interface may be included to improve flexibility and to provide redundancy in case of failure of an interface.

The user interface circuitry 261 includes hardware and software components that access the functions of the handset, display, keypad and speed dial keypad to provide user input and output resources for functions in the processor 240. The user interface circuitry includes a display interface 262, a keypad interface 264, a speed dial interface 266, an audio output interface 265 and an audio input interface 267.

The audio input interface 267 may receive voice signals from a microphone or other audio input device and converts the signals to digital information. The conversion preferably conforms to the G.711 ITU Standard. Further processing of the digital signal may be performed in the audio input interface 267, such as to provide compression (e.g. using G.723.1 standard) or to provide noise reduction, although such processing may also be performed in the processor 240. Alternatively, the audio input interface 267 may communicate an analog voice signal to the processor 240 for conversion to digital information.

The audio output interface 265 receives digital information representing voice from the processor 240 and converts the information to sound. In one embodiment, the speaker interface receives information in the form of G.711 although other processing such as decompression may be performed in the speaker interface 265. Alternatively, the processor 240 may convert digital information to analog voice signals and communicate the analog voice signals to the speaker interface 265.

The speed dial interface 266, the keypad interface 264 and the display interface 262 include well-known device interfaces and respective signal processing techniques. The speed dial interface 266 may include an interface to buttons on a keypad, or to display buttons that the user activates by pressing designated areas on the screen.

The user interface circuitry 261 may support other hardware and software interfaces. For example, a videophone implementation might also include a camera and monitor. The fixed communication device of the present invention is not limited to telephones or videophones – additional user interface types, for example, such as

the ones needed for computer games, are also contemplated as being within the scope of the present invention.

The processor 240 may consist of one or more smaller processing units, including, for example, a programmable digital signal processing engine. In the preferred embodiment, the processor is implemented as a single ASIC (Application Specific Integrated Circuit) to improve speed and to economize space. The processor 240 also includes operating system, application and communications software to perform the functions of the data network telephone 208. The operating system may be any suitable commercially available embedded or disk-based operating system, or any proprietary operating system.

The processor 240 includes a media engine 241 and a signaling stack 243 to perform the primary communications and applications functions of the data network telephone 208. The purpose of the signaling stack in an exemplary data network telephone 208 is to set up, manage, and tear down a call. During the setup phase, a user may use the keypad to enter a user identifier to call. The signaling stack 243 receives the user entry and formats a request message to send to the user identified by the user identifier to initiate a telephone call. The request message is sent to discover the location of the user identified by the user identifier, exchange communication parameters, such as the supported voice CODEC types, and establish the voice channel.

During the management phase, communication proceeds over the voice over data channel. Other parties may be invited to the call if needed or the existing CODEC can be changed. During the teardown phase, the call is terminated.

The signaling protocol used in the data network telephone 208 in FIG. 2B is the SIP protocol. In particular, the signaling stack implements a User Agent Client 244 and a User Agent Server 242, in accordance with the SIP protocol. Alternative signaling protocols, such as the ITU-T H.323 protocol and others, may also be used to implement the present invention.

Once the call is setup, the media engine 241 manages the communication over a data communications channel using a network transport protocol and the network interface 210. The media engine 241 sends and receives data packets having a data payload for carrying data and an indication of the type of data is being transported.

Bright House Networks - Ex. 1108, Page 636

The media engine 241 in the data network telephones 208 may sample the voice signals from the audio input 267 (or receive voice samples from the audio input 267), encode the samples, and build data packets on the sending side. On the receiver side, in addition to performing the reverse operations, the media engine also typically manages a receiver buffer to compensate for network jitter.

The media engine 241 includes hardware and software components for performing speed dial functions 246, registration functions 147, voice-over-data functions 249, display data function 251 and keypad output functions 253. The media engine 241 processes data that is received from the network 212, and data that is to be sent over the network 241.

For data that is received from the network 212, the media engine 241 may determine from the type of data in the packet whether packets contain sampled voice signals or data for performing other functions. Packets containing sampled voice signals are processed by voice over data function 249. The voice over data function 249 preferably conforms to a protocol for formatting voice signals as digital data streams. While any suitable protocol may be used, the media (voice signal) is preferably transported via the Real Time Protocol (RTP), which itself is carried inside of User Datagram Protocol (UDP). RTP is described in H. Schulzrinne et al., "RTP: A Transport Protocol for Real-Time Applications," IETF RFC 1889, Jan. 1996, which is incorporated herein by reference. UDP is described in J. Postel, "User Datagram Protocol," IETF RFC 768, Aug. 1980, and IP is described in J. Postel, ed., "Internet Protocol," IETF RFC 791, Sept. 1981, both of which are incorporated by reference herein.

Packets containing data for use in registering the data network telephone 208 with a network telephony service are processed by the registration/provisioning function 247. By registering the data network telephone 208, a user may establish with the network telephony service provider that calls addressed to the user's user identifier may be connected to the data network telephone 208. Provisioning configures the data network telephone 208 with features and other user account information that relate to the service provider.

Registration may occur when the data network telephone 208 sends a request to register to a service provider host, which may occur during power up, if the data

Bright House Networks - Ex. 1108, Page 637

network telephone 208 is connected to the network 212, or when the user connects the data network telephone 208 to the network 212. The registration/provisioning function 247 may automatically send the Register request when the network is sensed. The service provider host may respond by setting the user's user identifier to correspond to the telephone identifier of the data network telephone 208, and by acknowledging the request with a status message to the data network telephone 208. In one embodiment, the service provider host communicates a response message to the data network telephone that includes a service provider logo and/or a configuration program that programs selected features into the telephone. The selected features may include a speed dial assignment to a customer server, a help menu, a user-friendly display, etc.

Other features may be added to the registration/provisioning functions 247, or implemented as extensions to the registration functions 247. For example, the data network telephone 208 may be provisioned to provide selected network telephony features by establishing a data connection with a service provider, requesting the selected services, and receiving data that ensures that the services have been successfully provisioned. Such features may include, for example, caller identification, call forwarding, voice mail, unified voice/email, gateway services, PID-based applications, call conferencing, advertisement enable/disable, and any other service offered by the network telephony service provider to enhance the capabilities of the data network telephone 208. The requests for features may be made contemporaneously with setting up a new account (as described below with reference to FIGs. 3A-8). The features may also be requested to modify the service. Users need not be locked into any service plan or feature set. One advantage of such provisioning functions is that services may be ordered for temporary use in a manner that is convenient to the user.

Packets containing data that is to be displayed on the display device are processed by the display data function 251. The display data function 251 may be used for displaying, for example, the name(s) and user identifier(s) of the other party(-ies) to the call, the status of the telephone call, billing information, and other information. The display data function 251 may also provide access to the display interface 262 for the display of commercial messages sent from the commercial

Bright House Networks - Ex. 1108, Page 638

message server 120 (shown in FIG. 2A). The display data function 251 may process image data and text data that may be contained in and of the messages.

Packets containing data that programs or assigns speed dial keys are processed by the speed dial function 246. A speed dial key may be programmed during registration with the user identifier of the service provider's customer service department, or to a provisioning service. When a message, or one or more packets, is received, the data in the commercial message is examined for speed dial programming data. The speed dial programming data may include a speed dial key selector to identify the speed dial key being programmed, and a user identifier used to initiate a telephone call when the selected speed dial key is pressed. The speed dial programming data may also include directions to be displayed on the display screen that inform the user that a selected speed dial key has been programmed. In addition, the speed dial programming data may include an icon for display on a touch sensitive screen that describes the user or service to be reached when the icon on the display is touched.

The speed dial programming data may also include an indication of whether the speed dial key is to be programmed permanently, or temporarily. Temporarily programmed keys may be programmed for the duration of the present call only, or for a selected time period. Permanently programmed speed dial keys are programmed until re-programmed later.

For data that is to be sent over the data network 212, the media engine 241 formats the data as data packets in accordance with a selected protocol. The selected protocol is preferably the protocol that is supported by the data network telephone that will receive the data for the particular type of data being transported.

The voice over data function 249 formats voice samples according to the protocol used by the receiving data network telephone. In one preferred embodiment, the voice over data function 249 formats voice samples as RTP packets. The registration function 247 and the keypad output function 253 may use RTP or other protocols to transport data that does not represent voice signals.

Bright House Networks - Ex. 1108, Page 639

3. Cable Network As An Exemplary Access Network

Referring back to FIG. 2A, the system 200 includes a cable network 214 connected to the data network 206 by a router 238. The cable network 214 provides data network access to its members, which in FIG. 2A include a third data network telephone 218a, a fourth data network telephone 218b, a fifth data network telephone 218c, a workstation 218d, a second data network connection telephony server 150b and a network telephony connection database 152b. The users of the data network telephones 218a-c connected to the cable network 214 may communicate by telephone over the data network 206 with the users of the data network telephones 208a,b connected to the local area network 214.

The cable network 214 includes any digital cable television system that provides data connectivity. In the cable network 214, data is communicated by radio frequency in a high-frequency coaxial cable. The cable network 214 may include a head-end, or a central termination system that permits management of the cable connections to the users.

The cable network 214 includes high-frequency coaxial cable connections for terminating the members, such as the data network telephones 218a-c and the workstation 218d. The third, fourth and fifth data network telephones 218a-c are preferably similar to the data network telephone 208 described with reference to FIG. 2B. One difference is that the third, fourth and fifth data network telephones 218a-c access telephone service over the cable network 214, and the first and second data network telephones 208a,b access telephone service over the Ethernet.

C. Providing Telephone Services By A Data Network Telephony Service Provider

1. Telephony Service Provider

FIG. 2A shows a service provider host 160 having a service provider server 120 and a service provider database 122. The service provider server 120 registers data network telephones and performs user interactive connections with users to configure users' telephone accounts. The host 160 is connected to the data network 206, however, the host 160 may also be connected to either access network 212, 214.

Bright House Networks - Ex. 1108, Page 640

The host 160 may also include network telephony connection servers, such as server 150a,b. The host 160 may also communicate with separately located local network telephony connection servers 150, 152 for billing purposes, or for carrying out the features selected by users. The host 160 may be managed by a telephony service provider or by any entity for a telephony service provider.

The telephony connection server 150b is preferably a SIP-based server that performs call initiation, maintenance and teardown for the data network telephones 218a-c connected to the cable network 214. The telephony connection server 150b may be similar or identical to the telephony connection server 150a connected to the local area network 212. The ISP host 160 includes the service provider server 120 and the service provider database 122.

The system 200 shown in FIG. 2A includes a data network telephony system that permits the data network telephones 208a, b connected to the local area network 212 to communicate with the data network telephones 214 connected to the cable network 214. The system shown in FIG. 2A uses SIP in order to establish, maintain and teardown sessions, or telephone calls between users.

There are two major architectural elements to SIP: the user agent (UA) and the network server. The UA resides at the SIP end stations, (e.g. the data network telephones), and contains two parts: a user agent client (UAC), which is responsible for issuing SIP requests, and a user agent server (UAS), which responds to such requests. There are three different network server types: a redirect server, a proxy server, and a registrar. The various network server types may be combined into a single server, such as the telephony connection server 150a,b. Not all server types are required to implement the embodiments of the present invention. The communication services to be provided will determine which servers are present in the communication system. Preferred embodiments of the present invention may be carried out using proxy servers.

One example of a SIP operation involves a SIP UAC issuing a request, a SIP proxy server acting as end-user location discovery agent, and a SIP UAS accepting the call. A successful SIP invitation consists of two requests: INVITE followed by ACK. The INVITE message contains a user identifier to identify the callee, a caller user identifier to identify the caller, and a session description that informs the called party

Bright House Networks - Ex. 1108, Page 641

what type of media the caller can accept and where it wishes the media data to be sent. User identifiers in SIP requests are known as SIP addresses. SIP addresses are referred to as SIP Uniform Resource Locators (SIP-URLs), which are of the form sip:user@host.domain. Other addressing conventions may also be used.

Redirect servers process an INVITE message by sending back the SIP-URL where the callee is reachable. Proxy servers perform application layer routing of the SIP requests and responses. A proxy server can either be stateful or stateless. A stateful proxy holds information about the call during the entire time the call is up, while a stateless proxy processes a message without saving information contained in the message. Furthermore, proxies can either be forking or non-forking. A forking proxy can, for example, ring several phones at once until somebody takes the call. Registrar servers are used to record the SIP address (called a SIP URL) and the associated IP address. The most common use of a registrar server is for the UAC to notify the registrar where the UAC can be reached for a specified amount of time. When an INVITE request arrives for the SIP URL used in a REGISTER message, the proxy or redirect server forwards the request correctly.

At the local area network 212, the central registrar/proxy server, such as the network telephony server 150a is the primary destination of all SIP messages trying to establish a connection with users on the local area network 212. Preferably, the network telephony server 150a is also the only destination advertised to the SIP clients outside the LAN 212 on behalf of all the SIP clients residing on the LAN 212. The network telephony server 150a relays all SIP INVITE messages to the appropriate final destination (or another SIP proxy), based on a database lookup using the user database 152a. It allows all mobile clients to register with their current locations.

Similarly, the network telephony server 150b is the primary destination of all SIP messages trying to establish a connection with the data network telephones 218a-c connected to the cable network 214. Preferably, the network telephony server 150b is also the only destination advertised to the SIP clients outside the LAN 212 on behalf of all the SIP clients (e.g. data network telephones) residing on the LAN 212. The network telephony server 150b relays all SIP INVITE messages to the appropriate final destination (or another SIP proxy), based on a database lookup using the user database 152b.

Bright House Networks - Ex. 1108, Page 642

2. Registration of the Telephone

The data network telephones 208a,b and 218a-c in the system 200 preferably have pre-programmed device identifiers (e.g. MAC addresses or phone numbers), represented as SIP-URL's that are of the form sip:8475551212@3com.com. After power-up, each data network telephones 208a,b and 218a-c sends a SIP REGISTER message to the default registrar, such as the network telephony servers 150a,b. When a call arrives at one of the network telephony servers 150a,b for any of the registered SIP URLs, the server will forward the call to the appropriate destination. If a data network telephone is moved to a new location, all calls to the associated SIP URL will still be properly routed to that device. In other words, the system in FIG. 2A provides device mobility in the sense that calls will "follow" the data network telephone according to its SIP URL. This is especially useful if the data network telephone 208a,b or 218a-c is running the DHCP (Dynamic Host Configuration Protocol) so that when the location is changed, the IP address is also automatically changed.

An advantage of the system in FIG. 2A is that the network telephony connection server 150a,b may respond to REGISTER messages (for SIP and similar messages in other protocols) with a message that configures the data network telephone 208a,b or 218a-c to have a variety of ready-to-use features. The service provider may configure the telephony connection server 150a,b to enforce a particular configuration for operation, or offer the user choices of features that comprise the configuration. A data network telephone may be configured to include features such as:

- User identifier: a sequence of alphanumeric elements that uniquely identifies the user. The user identifier may be formatted as an E.164 telephone number, or as a name. The user identifier may be unique throughout the universe of users on the data network telephony system 200 (shown in FIG. 1), or it may acquire such uniqueness by association with a server identifier.

- Telephone Identifier: a sequence of alphanumeric elements that uniquely identifies the telephone. The telephone identifier may be formatted as an E.164 telephone number, or as a number, such as a MAC address. The telephone identifier may be unique throughout the universe of data network telephones on the data network telephony system 200, or it may acquire such uniqueness by association with a server identifier.

- The user's name, address and other information that may be used primarily for billing purposes. For example, the user's checking account number, credit card number or other financial information may be provided for automatic billing and payment capabilities.

- User's telephony service features. The user may subscribe, permanently or temporarily, to one or more telephony service features offered by the service provider:
  - Voice mail
  - Caller ID
  - Call Forwarding with true number portability
  - Teleconferencing

- Commercial messaging – a service that may be made available in embodiments of the present invention. A user may subscribe to have the data network telephone 218 receive (or not to receive) advertisements for display on the display of the data network telephone 218.

- Commercial messaging with speed dial programming – a service that may be made available in embodiments of the present invention. A user may subscribe to have the data network telephone 218 receive (or not to receive) advertisements that program the speed dial keys of the data network telephone 218.The display of the service provider logo
- Menu of functions
- Help menu
- Speed dial key programming (*e.g.* speed dial to customer service)
- Features as standard offerings – to compete, a provider may offer features that normally cost extra (*e.g.* caller ID, etc.) as standard features

- Packaged configurations – Features and offerings may be grouped as distinctly priced packages

- Functions using PDA connectivity (*e.g.* Remote Whiteboard communication, control of telephone use through PDA)

TABLE A

Bright House Networks - Ex. 1108, Page 644

FIG. 3A shows the data network telephone 208 for User A begin the registration process. User A's telephone 208 may be brand new, in which case, the process described with reference to FIGs. 3A-3D illustrates the ease with which the data network telephone 208 may be installed and used immediately. When User A connects the data network telephone 208 to the network 206 (NOTE: connection may be through an access network), the data network 208 uses its MAC address as an initial telephone identifier. The data network telephone 208 retrieves an IP address using a DHCP Discover message exchange, shown at 271, with a DHCP server 161.

The data network telephone 208 then sends a registration message as shown at 273. In a preferred embodiment, the registration message includes a temporary user identifier (xxxxxxxxxxxxxx) and a version identifier that identifies the current version of the configuration of the telephone 208. FIG. 3B shows a sample registration request at 472 in a message flow diagram.

Referring back to FIG. 3A, the telephony connection server 150a may respond to the registration message at 273 with a response message as shown at 275. The message at 275 includes an auto-configuration command which forces the data network telephone 208 to implement a new configuration. The new configuration may be an update to the current version identified by the current version identifier. FIG. 3B shows a sample of the auto-configuration response at 474. In a preferred embodiment, the auto-configuration message is communicated in the message body of a SIP response message.

The response message at 275 in FIG. 3A may also comprise an exchange of messages using a data channel. FIG. 3B shows a first data channel message 480 having a query to the user in TCP transmitted as TCP/IP. It is to be understood that any other protocol may be used. The message may be formatted for display on the data network telephone 208, as voice over data in a voice mail session, or any other manner conforming to the user interface capabilities of the telephone 208. The user may respond by saying "Yes"/"No", selecting a menu item by touching the screen, pressing a yes/no button, or any other manner conforming to the user interface capabilities of the telephone 208.

The user's response is communicated in a second data channel 482 to the network telephony connection server 150a. If the response was a "Yes" such that the

user wants the configuration of the data network telephone 208 updated, the network telephony connection server 150a responds with the updated version at 484.

Referring to FIG. 3C, the data network telephone 208 is shown as having been registered. The data network telephone 208 is shown configured with a phone number (user identifier), a service provider logo (*xyz*) and a hotlink, or display button programmed to dial customer service at 116 for the service provider. The service provider host 160 may configure the data network telephone with a full set of features, such as from those listed above, to allow the user to make full use of the data network telephone 208.

In an alternative embodiment, the registration process leaves the data network telephone 208 with a rudimentary configuration barely able to make any telephone calls. For example, the process may leave the data network telephone 208 capable of making only one call, to customer service for a user controlled provisioning of the system. The user may also provision the telephone 208 using a connection to the service provider's web page.

As shown in FIG. 4A, the user at data network telephone 208 makes a call at 281 to the service provider server 120 with its user identifier (xxxxxxxxxxxxxx), and a command to request service provisioning. A provisioning function, in response to the telephone call at 281, establishes a data connection 283 to perform the transfer (which may be with voice over data signals) of information. The service provider server 120 may send a form, or present an order screen 316, at the telephone requesting information from the user. The user may also use a workstation and connect at 287 to a web page 451 at the service provider server 120 and enter the information at a web page order screen 317. The information requested in both the order screen 316 and the web page order screen 317 is illustrated in FIG. 4B. One of ordinary skill in the art will appreciate that the web page order screen 317 is illustrated as an example of the type of information requested during a provisioning session. More or less information may be requested.

Referring to FIG. 4C, when the user has entered the data requested in the order screen, the service provider server 120 leaves a ready display 416 at the data network telephone 208 indicative of the type of configuration provided by the provisioning process. The service provider server 120 may also leave a confirmatory message 417

on the workstation (or on the data network telephone, either on the display or by voice) indicating what happens next. FIG. 4D shows an example of such a confirmatory message. Once the user responds to the email, the data network telephone 208 is ready for use.

The service provider server 120 also builds and stores in the service provider database 122 a user account 455 for the user as shown in FIG. 4A.

3. A Telephone Call

FIG. 5 shows the interaction between the components in FIG. 2A in performing a telephone call. As shown in FIG. 5, a telephony service provider (e.g. ISP) provides telephone service using the host 160. The telephony service provider may also provide data connectivity services and other services relating to communication (*e.g.* advertising) on the data network 206. With User A and User B registered with network telephony connection servers 150a,b respectively, the telephony connection server 150b operates as a proxy server (e.g. as a SIP proxy server) for User B's data network telephone 218. When other users, such as User A, attempt to call User B, the call setup will be made through the telephony connection server 150b.

As shown in FIG. 5, User A initiates a telephone call from User A's data network telephone 208 to the data network telephone 218 belonging to User B. User A begins the telephone call by dialing User B's user identifier using the keypad 118 (or a PID, or a speed dial key, or using any other manner). The data network telephone 208 sends a request to initiate a call to User B at 280 to the data network telephony connection 150b providing service to User B. The request to initiate a call to User B at 280 includes User B's user identifier as the callee, User A's user identifier as the caller and the protocols supported by User A's data network telephone 208.

The telephony connection server 150b sends the request to the data network telephone 218 identified in the user database 152b as belonging to User B, preferably, in accordance with its role as a proxy server, and preferably as defined in the SIP protocol. The data network telephone 218 responds with a response message (not shown in FIG. 5) to the telephony connection server 150b. The telephony connection

Bright House Networks - Ex. 1108, Page 647

server 150b receives the response message and sends the response message to User A's data network telephone 208 as shown at 282.

User A's data network telephone 208 receives the response message and may prepare an acknowledgement message if called for by the protocol (e.g. the SIP protocol).

User A's data network telephone 208 also establishes a voice over data channel 284 to permit communication between User A and User B. The voice over data channel 284 is preferably a data communications channel in which voice signals that have been converted to digital information are being carried as data messages in accordance with a selected protocol. The data messages include User B's message 286 and User A's messages 288 as shown in FIG. 5. User B's message 286 and User A's message 288 both include an IP protocol component, a UDP component, an RTP component and a G.72x component.

The IP protocol component permits routing of the messages 286, 288 in accordance with an Internet Protocol (e.g. Ipv4, IPV6, etc.). The UDP component permits transport as a User Datagram in a connection-less environment in accordance with the User Datagram Protocol (UDP). The RTP component is the chosen format for communicating the voice signals as data. The G.72x component indicates how the voice signals, once extracted from the RTP component are to be processed to produce audio. The G.72x indication represents that the voice signals may conform to ITU-T Recommendation G.721, ITU-T Recommendation G.722, ITU-T Recommendation G.723, ITU-T Recommendation G.723.1, ITU-T Recommendation G.728 or ITU-T Recommendation G.729. The voice signals may also conform to ITU-T Recommendation G.711 or to any other suitable protocol.

One of ordinary skill in the art will appreciate that the voice over data channel 284 may be implemented using different protocols than the ones shown in FIG. 5. Moreover, when the signaling protocol used to establish the telephone call permits negotiation of supported protocols as is done with the preferred SIP protocol, the voice over data channel 284 may be asymmetrical; that is, User A's messages 288 may be different from User B's messages 286.

The telephone call carried out over the voice over data channel 284 proceeds until one or both users terminate the call. During termination or teardown of the call,

Bright House Networks - Ex. 1108, Page 648

the telephony connection server 150b performs in accordance with the selected session protocol such as the SIP protocol.

FIGs. 3A-5 show systems and methods for registering and auto-configuring a data network telephone 208 in accordance with embodiments of the present invention. Those of ordinary skill in the art will appreciate that the systems and methods described above are examples. Other embodiments may fall within the scope of the claims.

D. Methods For Providing Registration and Provisioning of a Data Network Telephone Using A Data Network Telephony System

FIGs. 6-8 illustrate methods for providing registration and provisioning for a data network telephone that may be performed using any suitable data network telephony system. FIG. 6 is a flowchart showing a method of configuring a data network telephone by registering for service with a service provider. As shown at step 500 in FIG. 6, a data network telephone starts by obtaining an IP address from a DHCP server. At step 502, a request to register message is sent to a service provider server. The service provider server may have a designated default proxy server to use, or may provide the appropriate server with a call management protocol and/or registration server. In the request to register message, the data network telephone includes a current version of the telephone configuration as shown at step 502. The version of the telephone configuration may include different combinations of the features listed above in Table A.

At step 506, the service provider server 120 (FIG. 1) checks the telephone version with the latest version available. An OR step 506 in the flowchart of FIG. 6 indicates that alternative steps may be taken. At step 507, the service provider server 120 may automatically re-configure the data network telephone. Alternatively, the service provider server may query the user to determine whether to upgrade to a new version at decision block 508. A yes response to the query leads to step 510 to re-configure the data network telephone.

One advantage of registering in the manner shown in FIG. 6 is that a full-function feature laden configuration of the data network telephone is possible using a register request.

Bright House Networks - Ex. 1108, Page 649

FIG. 7 is a flowchart that shows a method for registering the data network telephone with partial or low-level service so that the user may provision the data network telephone as a completely personalized data network telephone. At step 600 in FIG. 7, the data network telephone requests an IP address from a DHCP server. The request to register is sent at step 602 to the default proxy server. At step 604, the user proceeds to a method for provisioning the data network telephone.

FIG. 8 shows a preferred method for provisioning the data network telephone. At step 700, the user connects to the service provider's web page for providing user account information. At step 702, the user enters billing information. At step 704, the user enters user-selectable user identifiers, passwords, email identifiers, etc. At step 706, the user selects features that the user would like to add, and at step 708, the account information is submitted. A confirmatory message and email is received at step 710. When the user responds to the email at step 712, the data network telephone may be used.

While the invention has been described in conjunction with presently preferred embodiments of the invention, persons of skill in the art will appreciate that variations may be made without departure from the scope and spirit of the invention. For example, the access networks shown in FIG. 2A may comprise any other suitable type of local area network or service infrastructure.

In addition, protocols of various types are referenced throughout. While preferred and alternative embodiments may implement selected protocols, any suitable replacement protocol not mentioned, or any function not part of a protocol used to replace a corresponding function from a protocol may be implemented without departing from the scope of the invention.

This true scope and spirit is defined by the appended claims, interpreted in light of the foregoing.

WE CLAIM:

1. A system for providing telephone service comprising:

a data network to provide data connectivity for a plurality of data communications channels using data transport protocols;

at least one data network telephone connected to the data network, the data network operable to communicate voice signals as data packets on a voice over data channel, the voice over data channel being one of the plurality of data communications channels on the data network containing packetized voice signals, the data network telephone being operable to convert data packets communicated on the voice over data channel to voice; and

a service provider server connected to the data network, the service provider server being operable to configure the data network telephone to perform voice communications functions and at least one enhanced telephony feature.

2. The system of Claim 1 wherein the service provider server includes a registration function to automatically configure the data network telephone with a first configuration.

3. The system of Claim 1 wherein the service provider server includes a registration function to query a user to determine whether to configure the data network telephone with a second configuration.

4. The system of Claim 1 wherein the service provider server includes a network telephony connection server operable to perform registration functions, the registration functions being operable to configure the data network telephone.

5. The system of Claim 4 wherein the network telephony connection server uses a call management protocol to perform registration functions.

Bright House Networks - Ex. 1108, Page 651

6. The system of Claim 5 wherein the call management protocol is a protocol selected from the group consisting of: Session Initiation Protocol (SIP), H.323, MGCP and MEGACO.

7. A telephone for communicating voice signals on a data network telephony system, the telephone comprising:

a network interface to sense a network connection;

a signaling stack operable to perform call initiation functions;

a media engine operable to perform data communications functions, the media engine comprising a voice function operable to communicate digitized voice signals on data packets; and

a registration function to generate a request to register with a telephony connection server when the network connection is sensed.

8. The telephone of Claim 7 wherein the registration function receives a configuration from the telephony connection server.

9. The telephone of Claim 8 wherein:

the telephone includes a display device; wherein,

the configuration includes a service provider logo and the registration function displays the service provider logo on the display.

10. A method of providing service provider selected configurations of a data network telephone comprising the steps of:

detecting a request to register from the data network telephone, the request containing a current configuration version identifier;

comparing the current configuration version identifier with a service provider current configuration; and

if current configuration version identifier is not the service provider current configuration, determining whether to update the configuration of the data network telephone.

Bright House Networks - Ex. 1108, Page 652

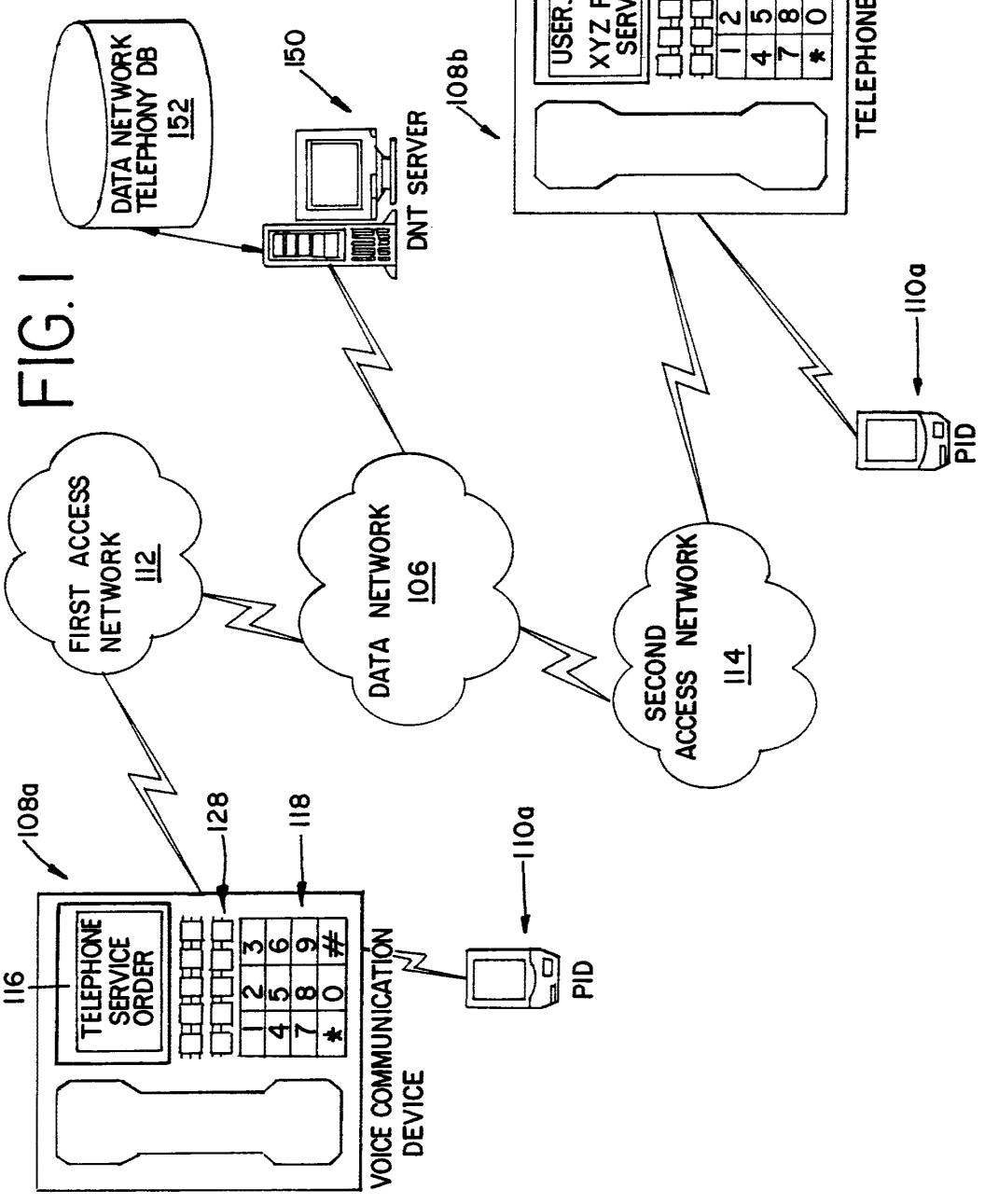

FIG. 1

Bright House Networks - Ex. 1108, Page 653

FIG. 2A

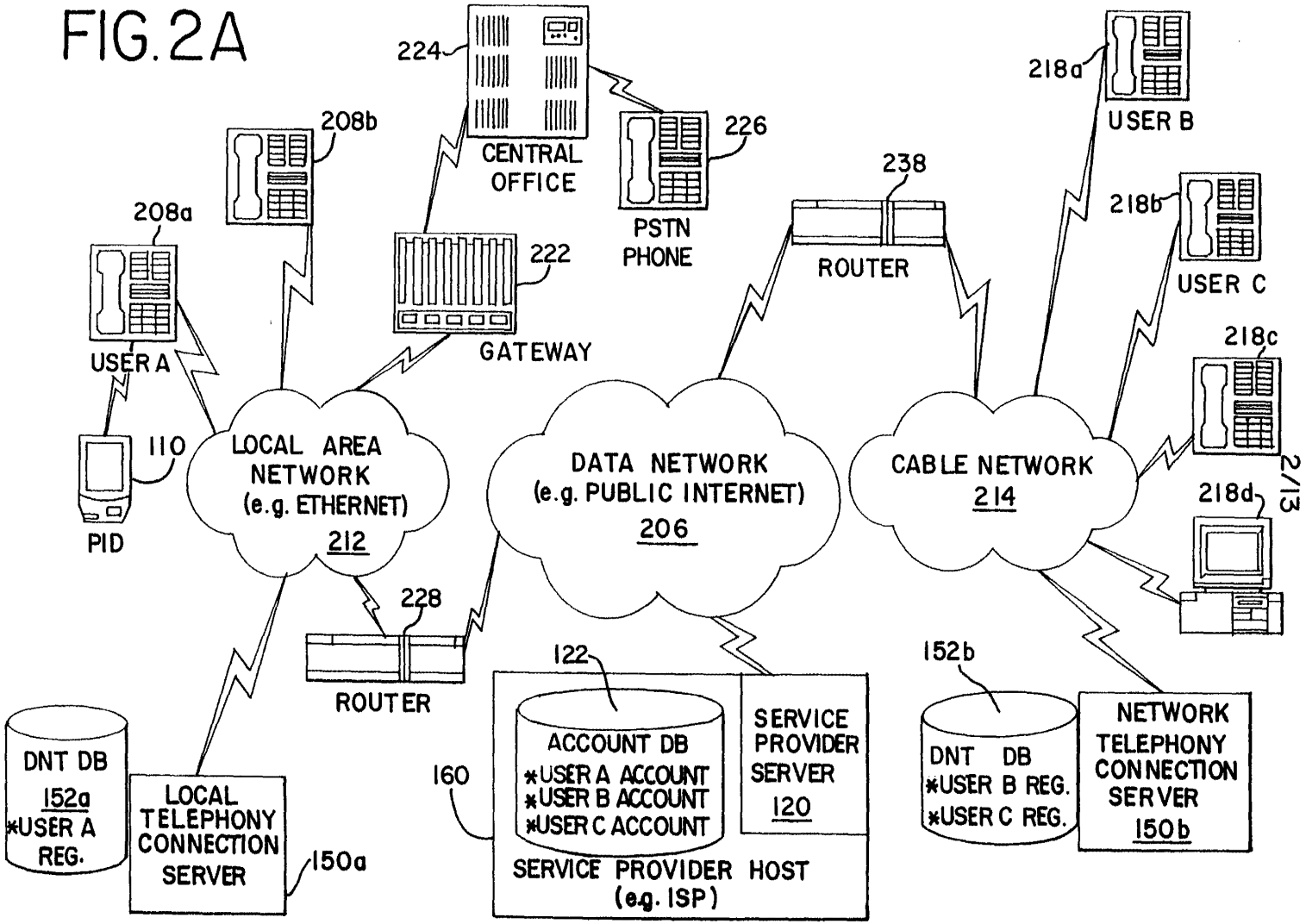
224
CENTRAL OFFICE
226
PSTN PHONE
208b
208a
222
GATEWAY
USER A
110
PID
LOCAL AREA NETWORK (e.g. ETHERNET) 212
238
ROUTER
218a
USER B
218b
USER C
218c
218d
DATA NETWORK (e.g. PUBLIC INTERNET) 206
CABLE NETWORK 214
228
ROUTER
122
ACCOUNT DB
*USER A ACCOUNT
*USER B ACCOUNT
*USER C ACCOUNT
SERVICE PROVIDER SERVER 120
160
SERVICE PROVIDER HOST (e.g. ISP)
DNT DB 152a
*USER A REG.
LOCAL TELEPHONY CONNECTION SERVER
150a
152b
DNT DB
*USER B REG.
*USER C REG.
NETWORK TELEPHONY CONNECTION SERVER 150b

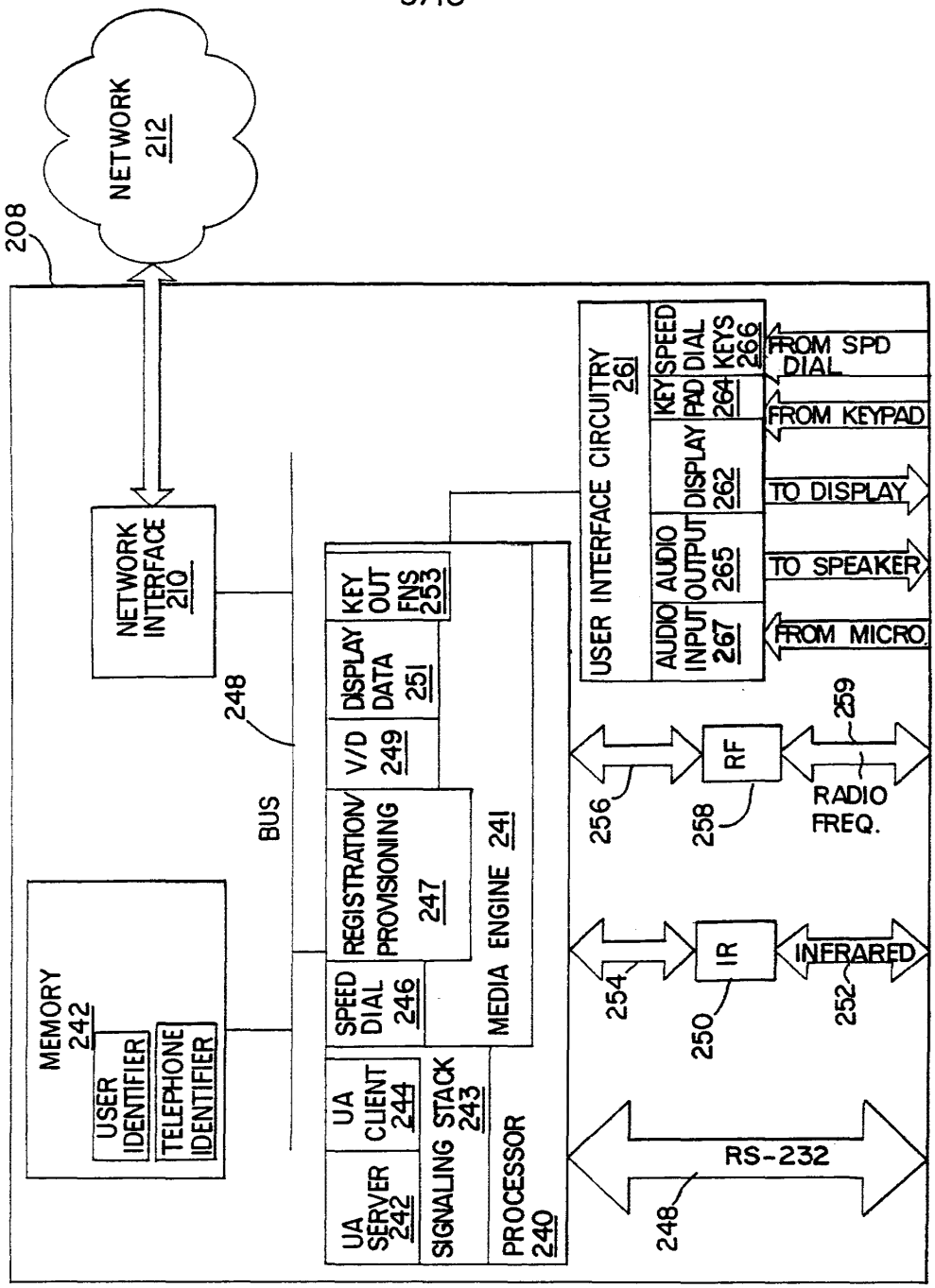

FIG. 2B

Bright House Networks - Ex. 1108, Page 655

FIG. 3A

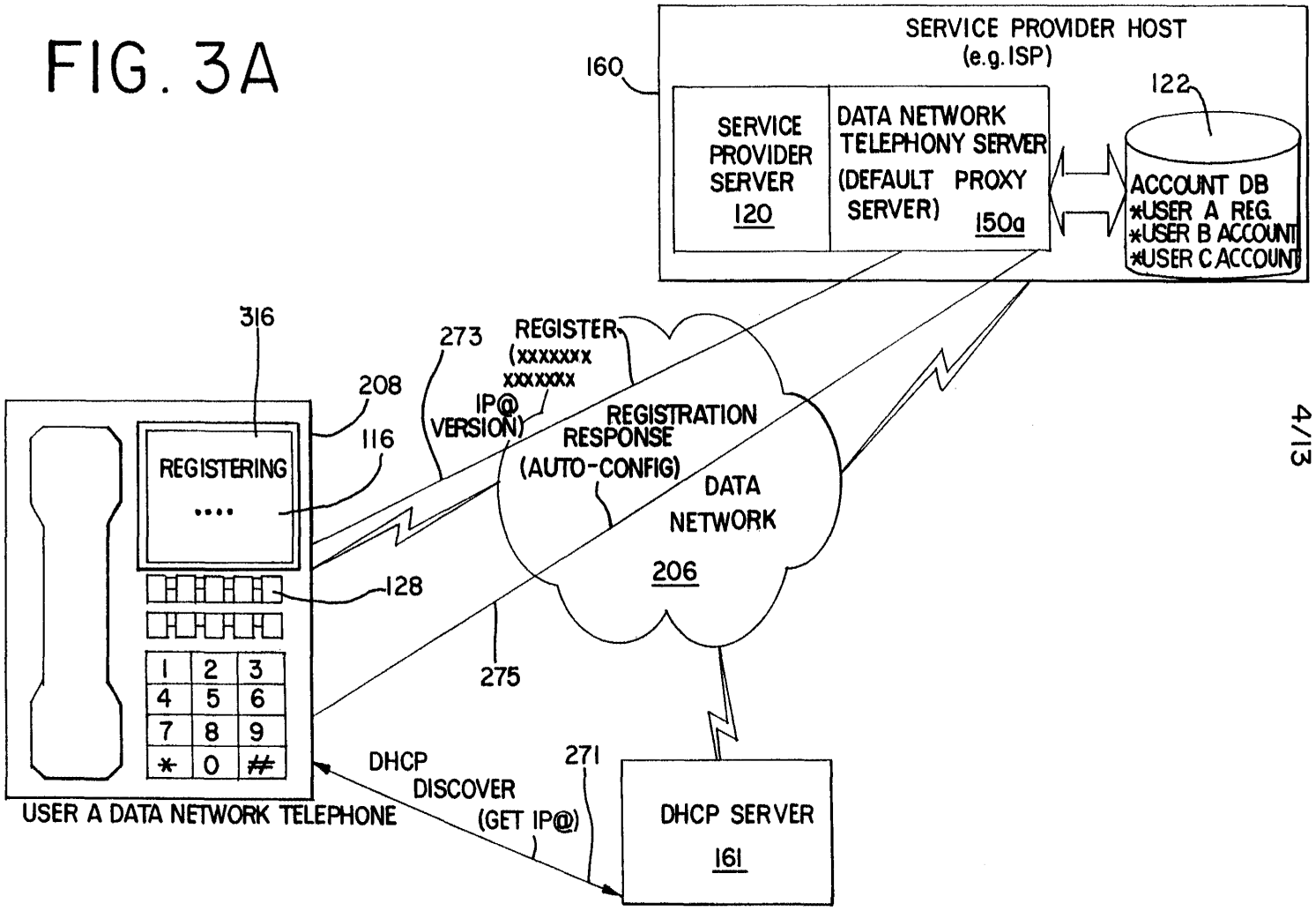
SERVICE PROVIDER HOST
(e.g. ISP)
160
122
SERVICE PROVIDER SERVER 120
DATA NETWORK TELEPHONY SERVER (DEFAULT PROXY SERVER) 150a
ACCOUNT DB
*USER A REG.
*USER B ACCOUNT
*USER C ACCOUNT
316
273
REGISTER (xxxxxxx xxxxxx IP@ VERSION)
208
116
REGISTERING
....
REGISTRATION RESPONSE (AUTO-CONFIG)
DATA NETWORK 206
128
1 2 3
4 5 6
7 8 9
* 0 #
275
271
DHCP DISCOVER (GET IP@)
DHCP SERVER 161
USER A DATA NETWORK TELEPHONE

SUBSTITUTE SHEET (RULE 26)

FIG. 3B

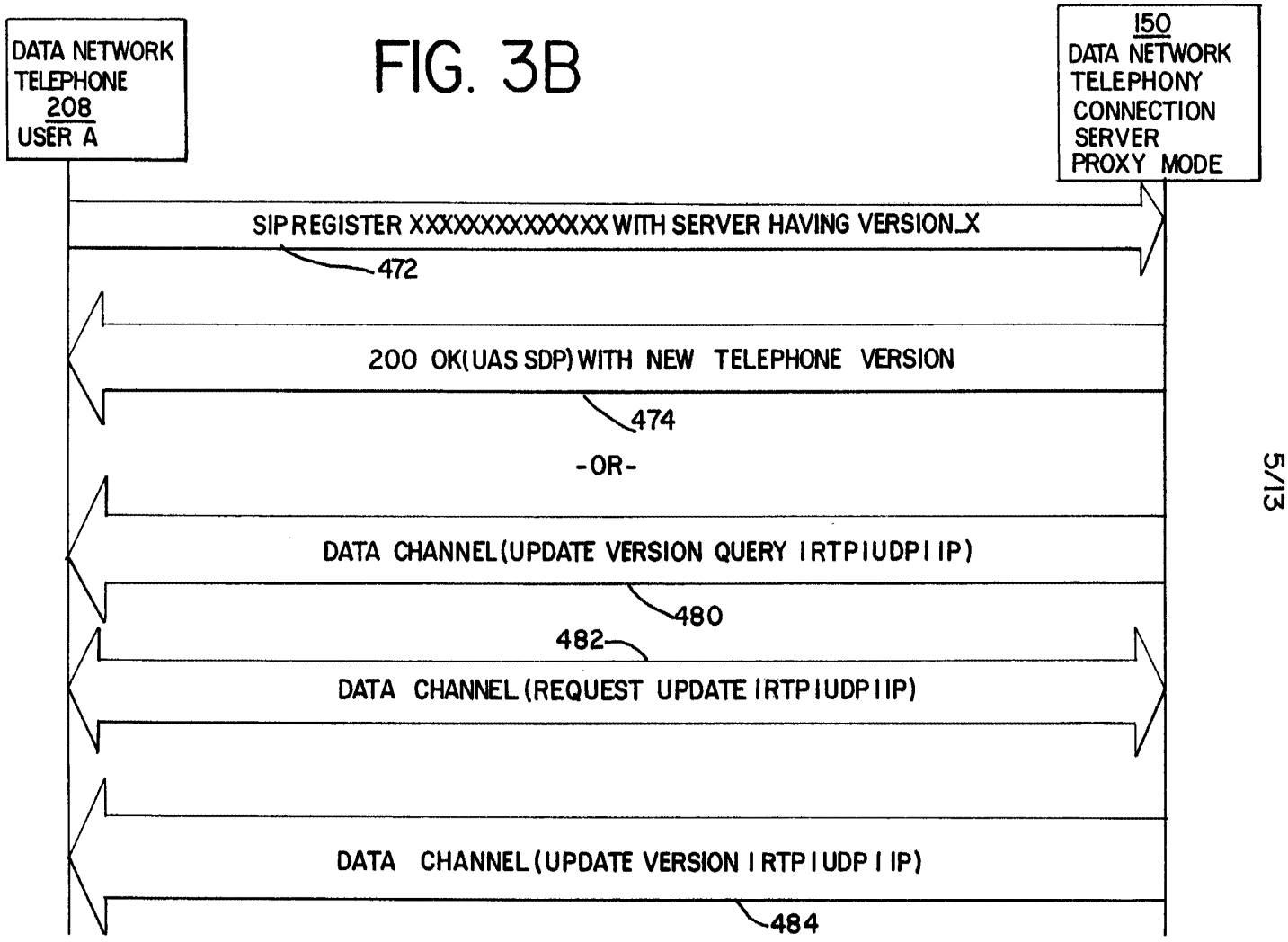

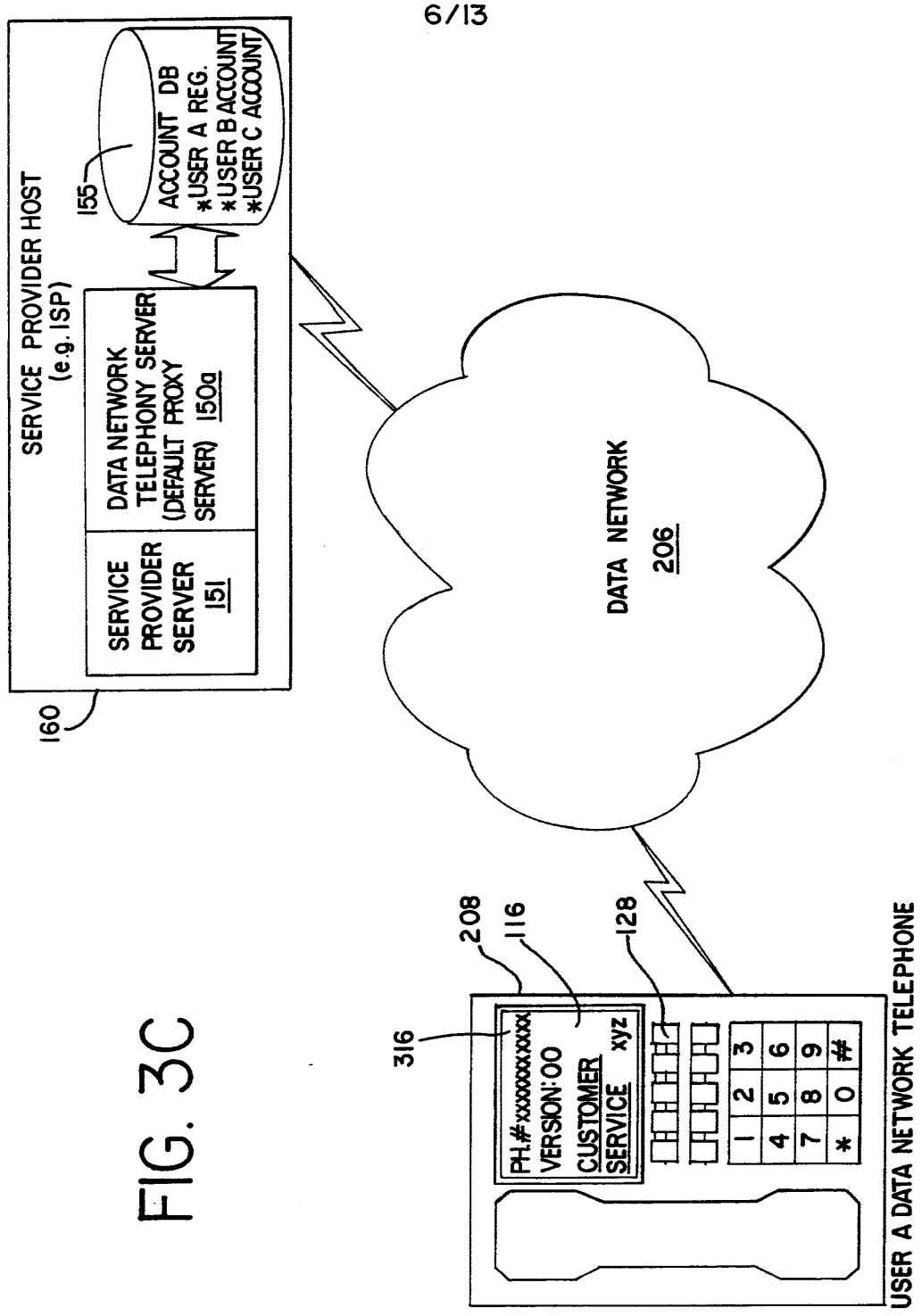

FIG. 3C

Bright House Networks - Ex. 1108, Page 658

FIG. 4A

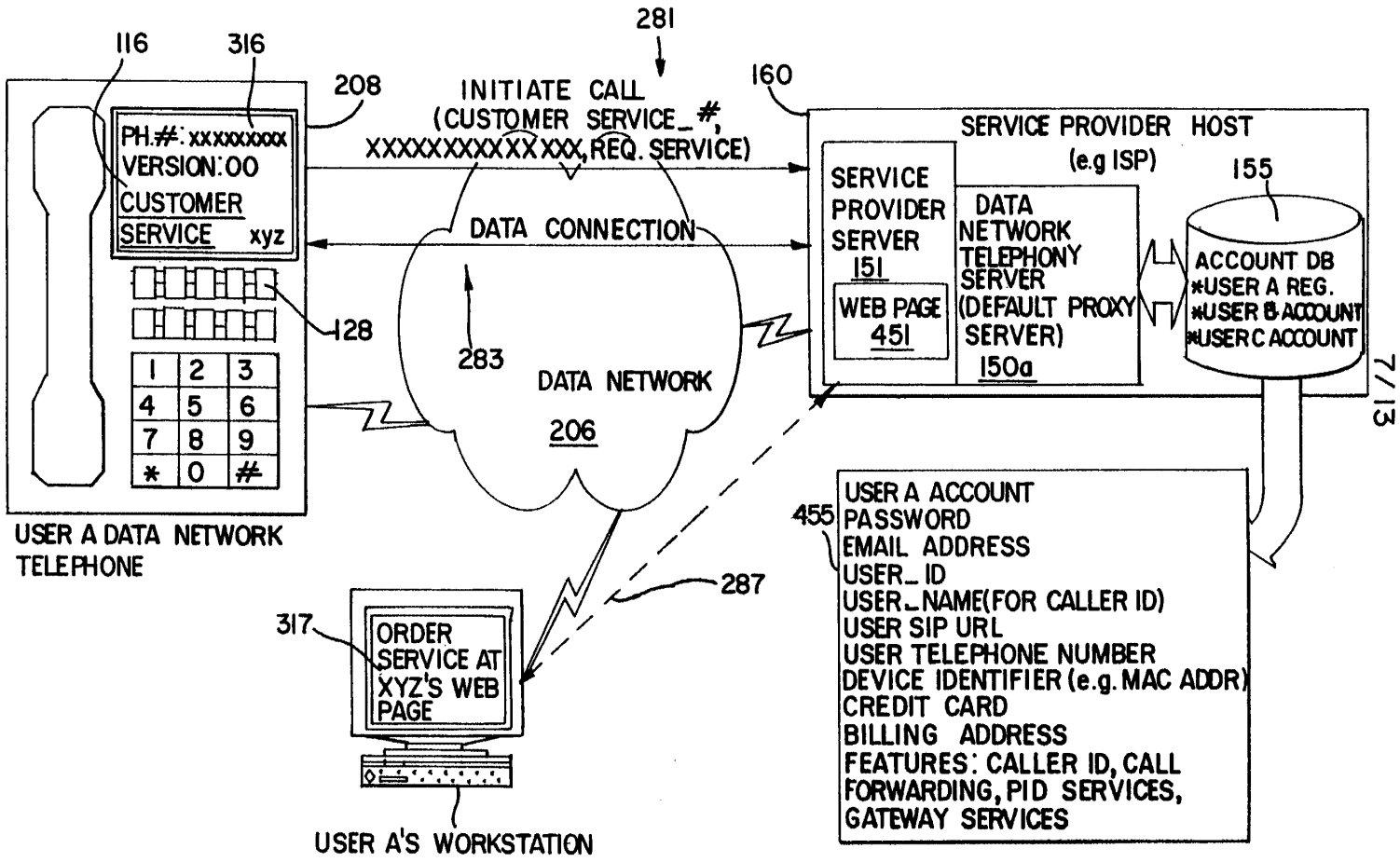
116
316
208
281
INITIATE CALL
(CUSTOMER SERVICE_#,
XXXXXXXXXXXXXX, REQ. SERVICE)
160
SERVICE PROVIDER HOST
(e.g ISP)
155
PH.#: xxxxxxxx
VERSION: 00
CUSTOMER SERVICE xyz
DATA CONNECTION
SERVICE PROVIDER SERVER 151
WEB PAGE 451
DATA NETWORK TELEPHONY SERVER (DEFAULT PROXY SERVER) 150a
ACCOUNT DB
*USER A REG.
*USER B ACCOUNT
*USER C ACCOUNT
128
283
DATA NETWORK
206
1 2 3
4 5 6
7 8 9
* 0 #
USER A DATA NETWORK TELEPHONE
7/13
455
USER A ACCOUNT
PASSWORD
EMAIL ADDRESS
USER_ID
USER_NAME(FOR CALLER ID)
USER SIP URL
USER TELEPHONE NUMBER
DEVICE IDENTIFIER (e.g. MAC ADDR)
CREDIT CARD
BILLING ADDRESS
FEATURES: CALLER ID, CALL FORWARDING, PID SERVICES, GATEWAY SERVICES
287
317
ORDER SERVICE AT XYZ'S WEB PAGE
USER A'S WORKSTATION

FIG. 4B

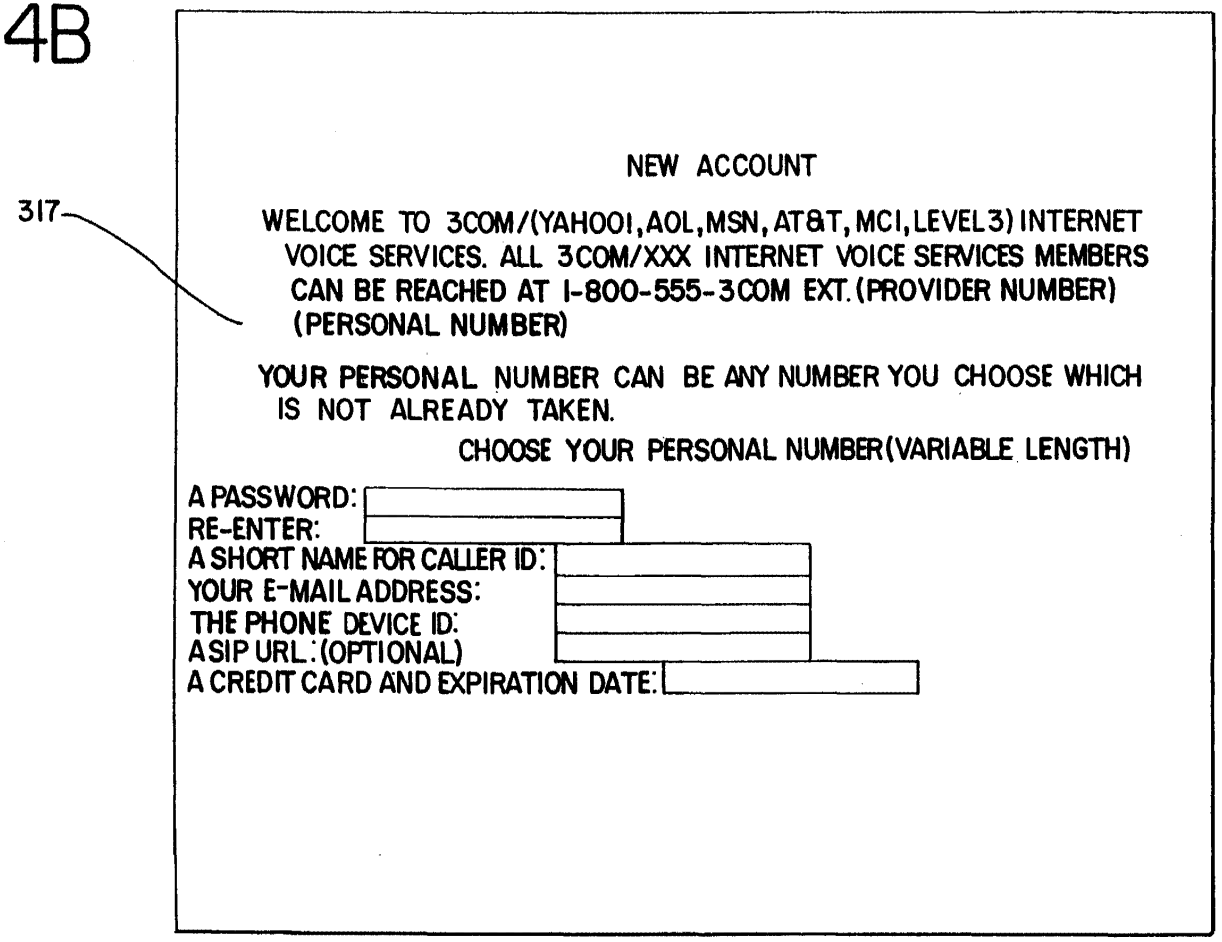

SUBSTITUTE SHEET (RULE 26)

FIG.4C

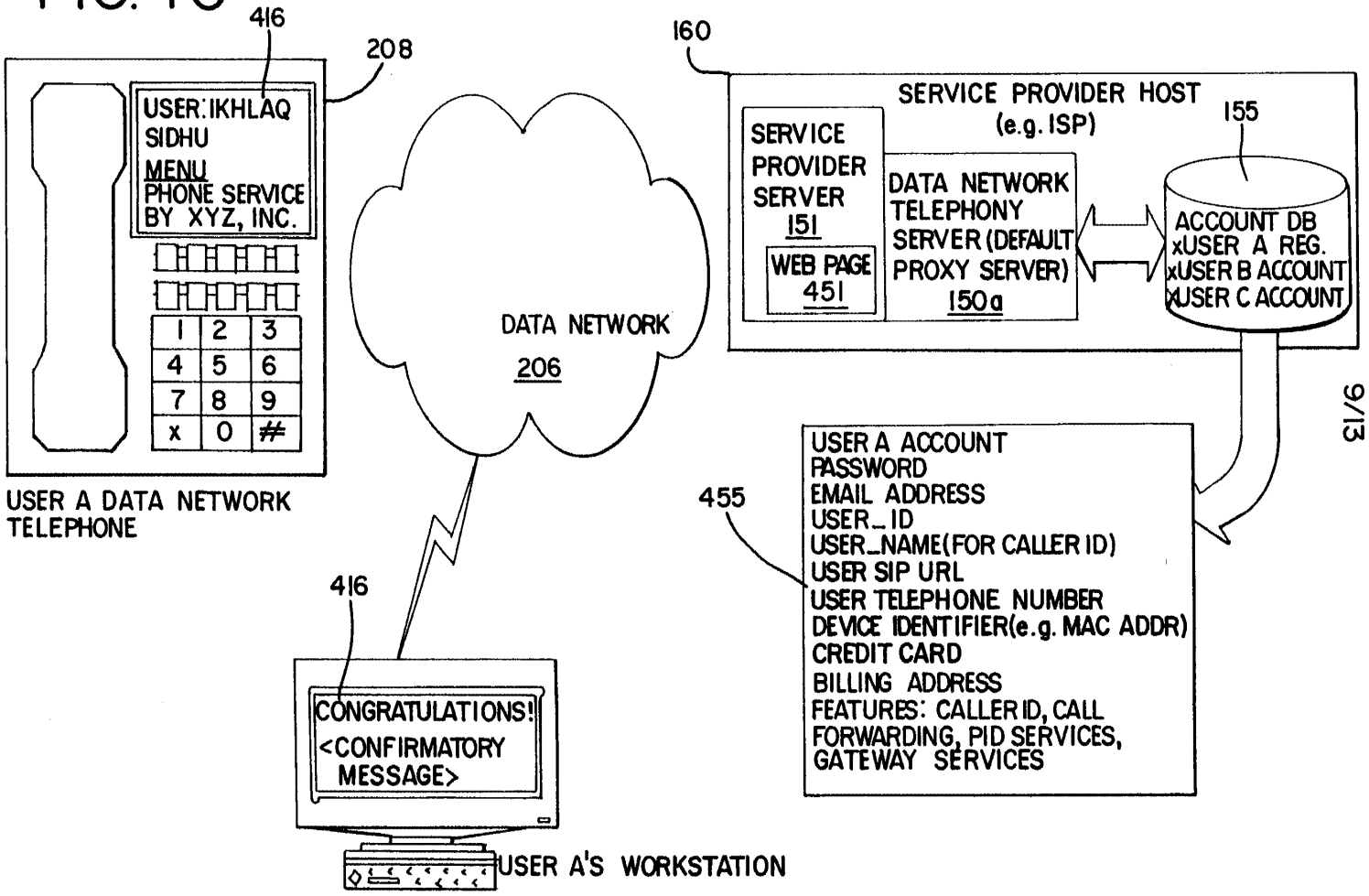
416
208
USER: IKHLAQ SIDHU
MENU
PHONE SERVICE BY XYZ, INC.
1 2 3
4 5 6
7 8 9
x 0 #
USER A DATA NETWORK TELEPHONE
DATA NETWORK
206
160
SERVICE PROVIDER HOST
(e.g. ISP)
SERVICE PROVIDER SERVER
151
WEB PAGE
451
DATA NETWORK TELEPHONY SERVER (DEFAULT PROXY SERVER)
150a
155
ACCOUNT DB
xUSER A REG.
xUSER B ACCOUNT
xUSER C ACCOUNT
9/13
455
USER A ACCOUNT
PASSWORD
EMAIL ADDRESS
USER_ID
USER_NAME(FOR CALLER ID)
USER SIP URL
USER TELEPHONE NUMBER
DEVICE IDENTIFIER(e.g. MAC ADDR)
CREDIT CARD
BILLING ADDRESS
FEATURES: CALLER ID, CALL FORWARDING, PID SERVICES, GATEWAY SERVICES
416
CONGRATULATIONS!
<CONFIRMATORY MESSAGE>
USER A'S WORKSTATION

FIG. 4D

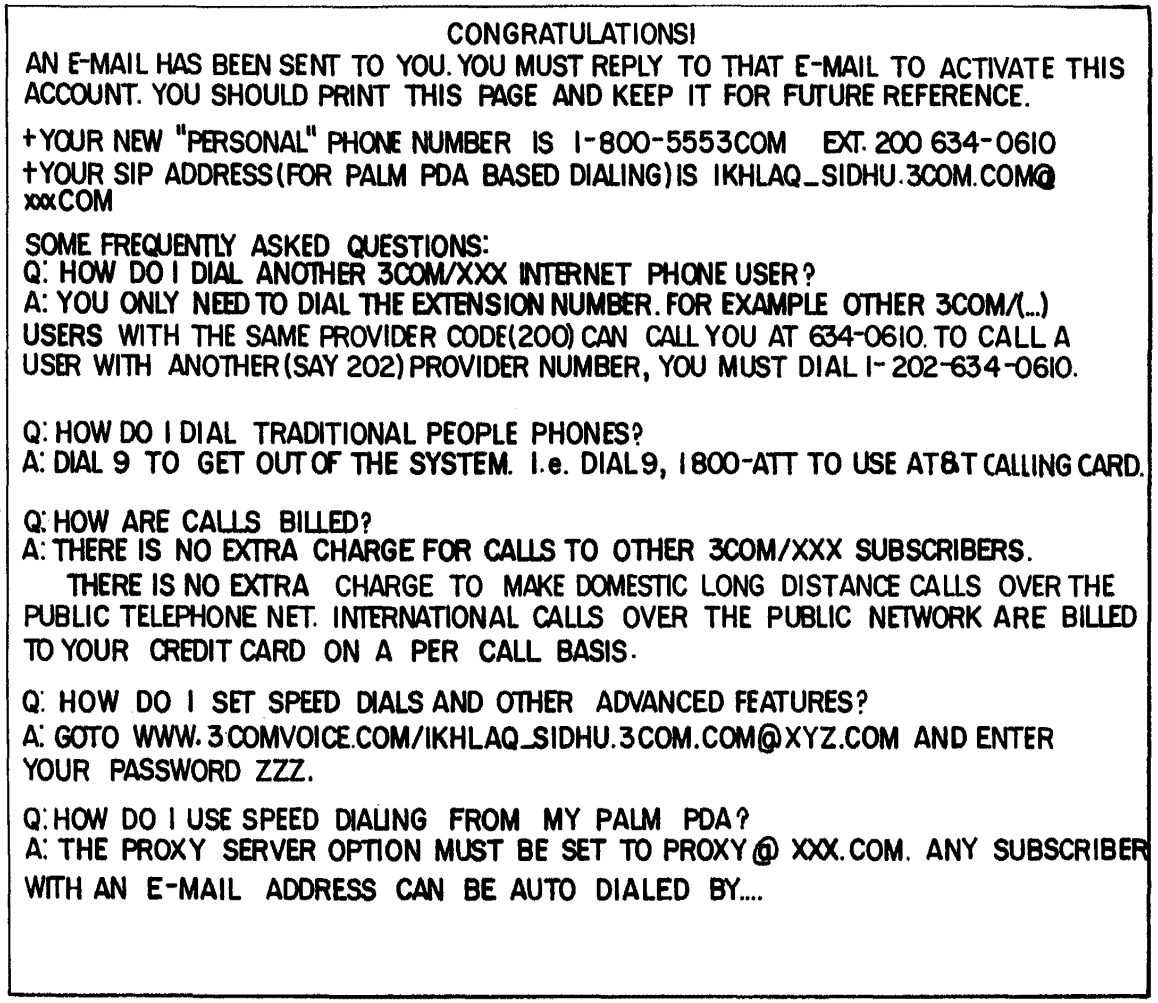

SUBSTITUTE SHEET (RULE 26)

FIG. 5

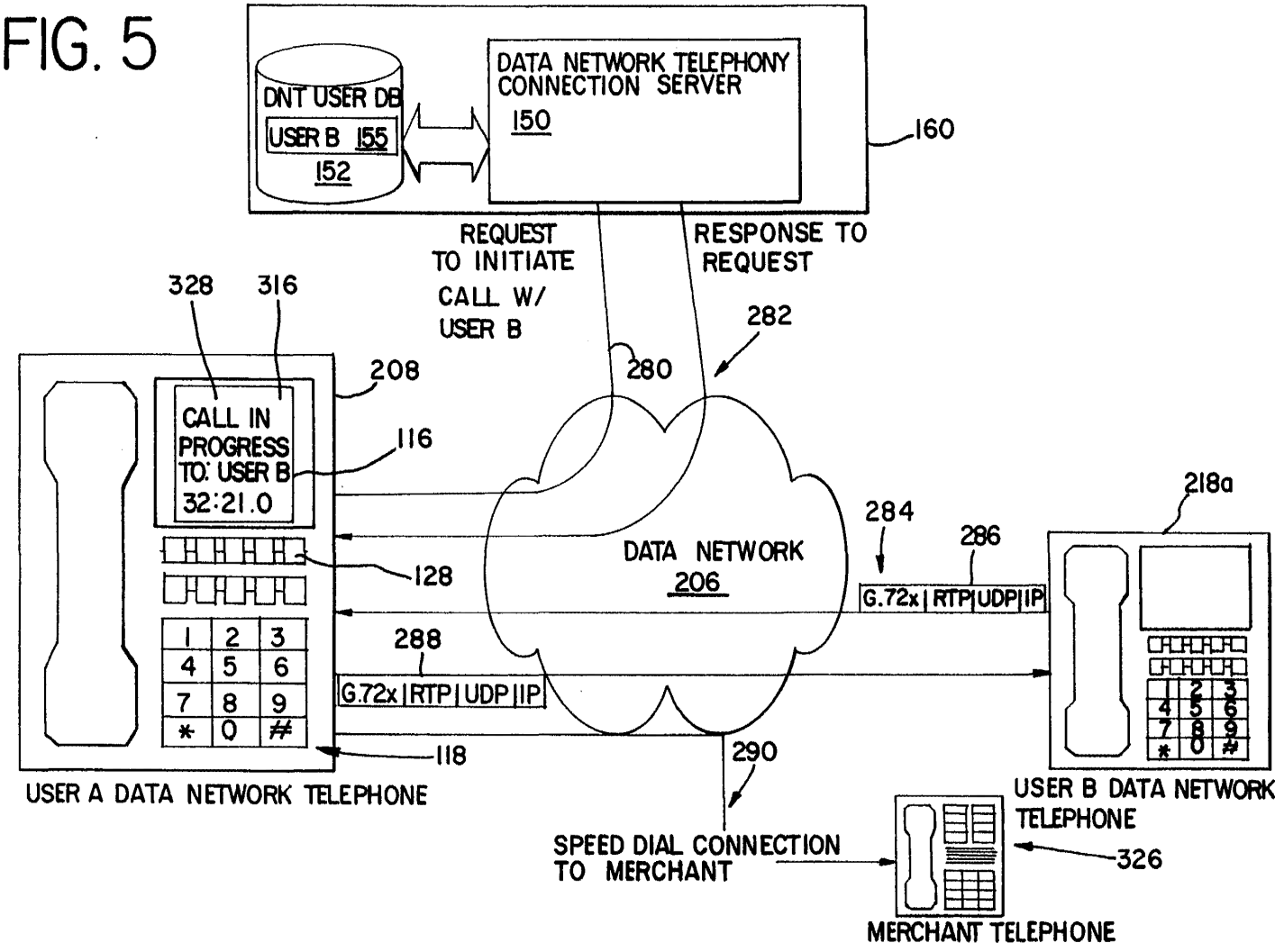

SUBSTITUTE SHEET (RULE 26)

FIG. 6

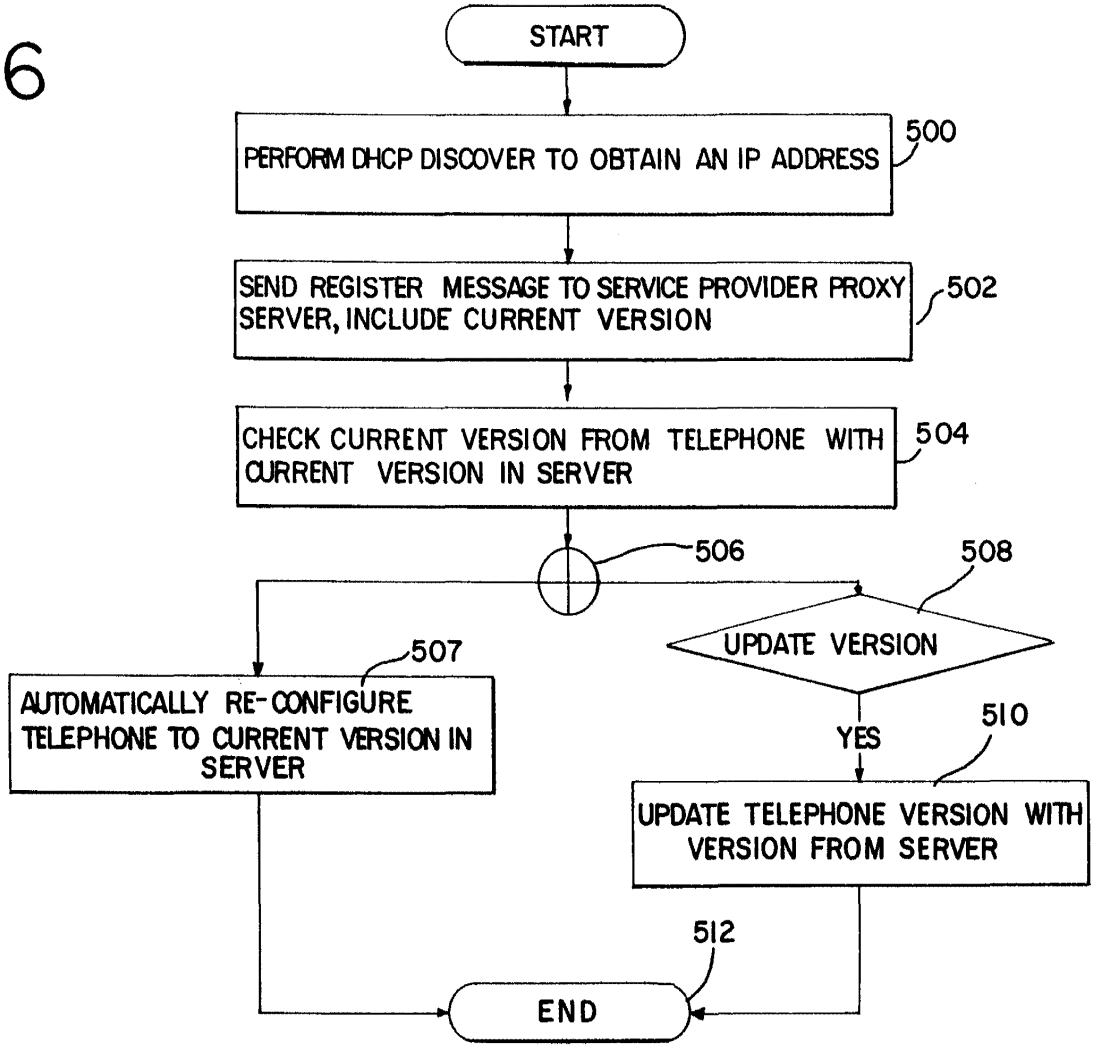

SUBSTITUTE SHEET (RULE 26)

FIG. 7

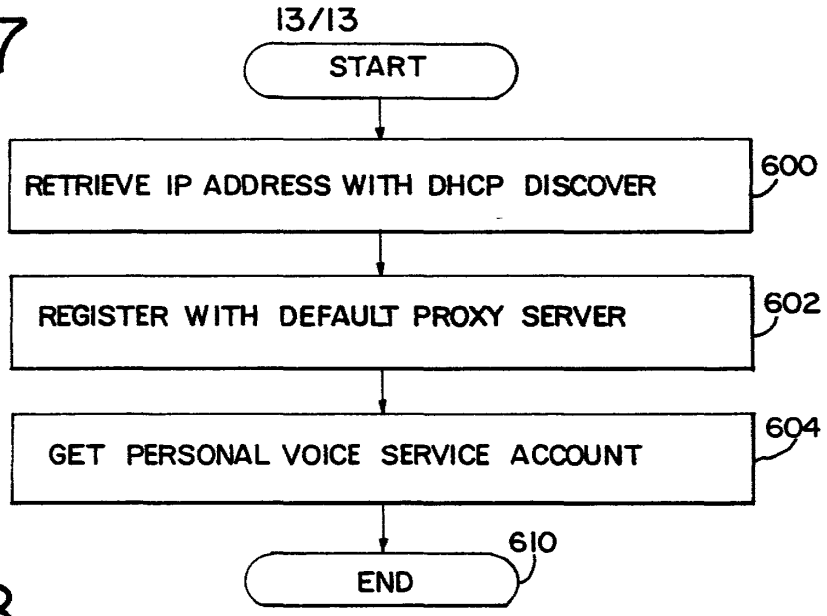

FIG. 8

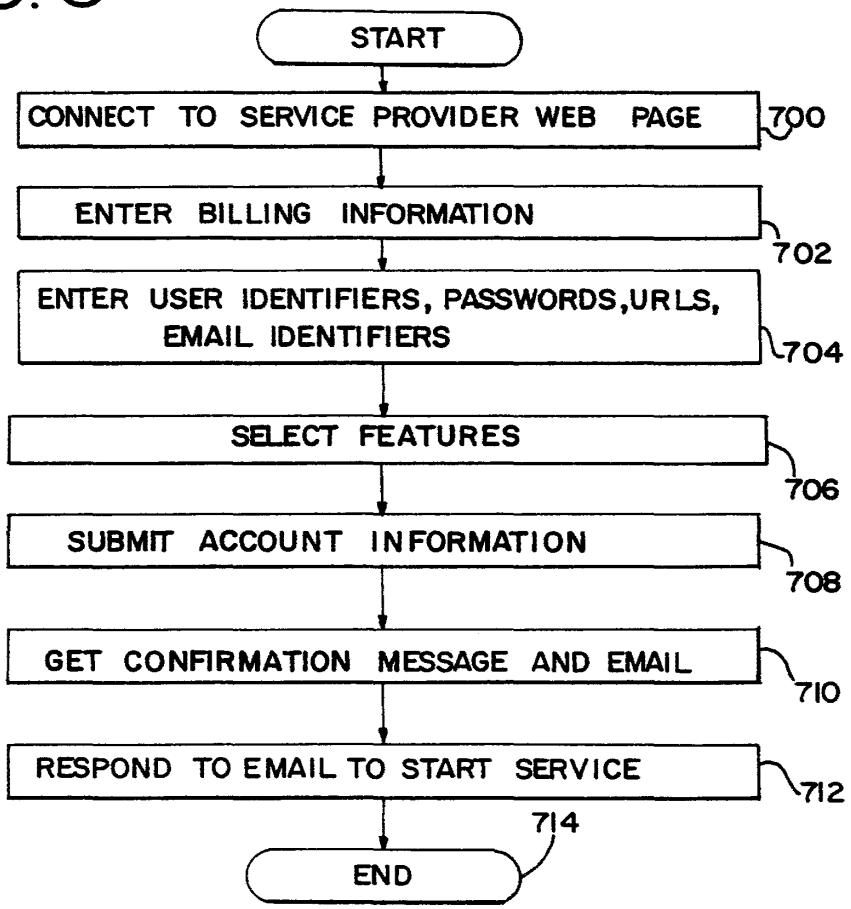

Bright House Networks - Ex. 1108, Page 665

INTERNATIONAL SEARCH REPORT

Inter nal Application No
PCT/US 00/26649

A. CLASSIFICATION OF SUBJECT MATTER
IPC 7 H04M7/00

According to International Patent Classification (IPC) or to both national classification and IPC

B. FIELDS SEARCHED

Minimum documentation searched (classification system followed by classification symbols)
IPC 7 H04M

Documentation searched other than minimum documentation to the extent that such documents are included in the fields searched

Electronic data base consulted during the international search (name of data base and, where practical, search terms used)
EPO-Internal, WPI Data, PAJ, INSPEC, COMPENDEX

C. DOCUMENTS CONSIDERED TO BE RELEVANT

Category °	Citation of document, with indication, where appropriate, of the relevant passages	Relevant to claim No.
X	WO 99 19988 A (INFOGEAR TECHNOLOGY CORP) 22 April 1999 (1999-04-22) abstract page 4, line 30 -page 6, line 9 page 10, line 36 -page 12, line 4 page 14, line 10 -page 14 page 19, line 1 - line 7 claims 6,13; figures 3,6	1-10
A	DALGIC I ET AL: "TRUE NUMBER PORTABILITY AND ADVANCED CALL SCREENING IN A SIP-BASED IP TELEPHONY SYSTEM" IEEE COMMUNICATIONS MAGAZINE,IEEE SERVICE CENTER. PISCATAWAY, N.J,US, vol. 37, no. 7, July 1999 (1999-07), pages 96-101, XP000835310 ISSN: 0163-6804 the whole document	1-10

-/--

[X] Further documents are listed in the continuation of box C.

[X] Patent family members are listed in annex.

° Special categories of cited documents :

"A" document defining the general state of the art which is not considered to be of particular relevance

"E" earlier document but published on or after the international filing date

"L" document which may throw doubts on priority claim(s) or which is cited to establish the publication date of another citation or other special reason (as specified)

"O" document referring to an oral disclosure, use, exhibition or other means

"P" document published prior to the international filing date but later than the priority date claimed

"T" later document published after the international filing date or priority date and not in conflict with the application but cited to understand the principle or theory underlying the invention

"X" document of particular relevance; the claimed invention cannot be considered novel or cannot be considered to involve an inventive step when the document is taken alone

"Y" document of particular relevance; the claimed invention cannot be considered to involve an inventive step when the document is combined with one or more other such documents, such combination being obvious to a person skilled in the art.

"&" document member of the same patent family

Date of the actual completion of the international search	Date of mailing of the international search report
25 January 2001	06/02/2001

Name and mailing address of the ISA	Authorized officer
European Patent Office, P.B. 5818 Patentlaan 2 NL - 2280 HV Rijswijk Tel. (+31-70) 340-2040, Tx. 31 651 epo nl, Fax: (+31-70) 340-3016	Megalou, M

1

Form PCT/ISA/210 (second sheet) (July 1992)

Bright House Networks - Ex. 1108, Page 666

INTERNATIONAL SEARCH REPORT

Inter nal Application No
PCT/US 00/26649

C.(Continuation) DOCUMENTS CONSIDERED TO BE RELEVANT

Category °	Citation of document, with indication,where appropriate, of the relevant passages	Relevant to claim No.
A	WO 98 16051 A (MITEL CORP) 16 April 1998 (1998-04-16) the whole document	1-10
A	WO 97 31492 A (TRUONG HONG LINH ;WONG JOHNNY WAI NANG (CH); IBM (US)) 28 August 1997 (1997-08-28) claims 1-13; figures 2,3	1-10

Form PCT/ISA/210 (continuation of second sheet) (July 1992)

Bright House Networks - Ex. 1108, Page 667

INTERNATIONAL SEARCH REPORT

Information on patent family members

Inter nal Application No
PCT/US 00/26649

Patent document cited in search report	Publication date	Patent family member(s)	Publication date
WO 9919988 A	22-04-1999	AU 9570598 A	03-05-1999
		EP 1021902 A	26-07-2000
		ZA 9808251 A	13-05-1999
WO 9816051 A	16-04-1998	CA 2187240 A	07-04-1998
WO 9731492 A	28-08-1997	EP 0885530 A	23-12-1998
		JP 11504191 T	06-04-1999

Form PCT/ISA/210 (patent family annex) (July 1992)

(12) INTERNATIONAL APPLICATION PUBLISHED UNDER THE PATENT COOPERATION TREATY (PCT)

(19) World Intellectual Property Organization
International Bureau

(43) International Publication Date
5 April 2001 (05.04.2001)

PCT

(10) International Publication Number
WO 01/24503 A1

(51) International Patent Classification[7]: H04M 7/00

(21) International Application Number: PCT/US00/26650

(22) International Filing Date:
27 September 2000 (27.09.2000)

(25) Filing Language: English

(26) Publication Language: English

(30) Priority Data:
09/406,152 27 September 1999 (27.09.1999) US

(63) Related by continuation (CON) or continuation-in-part (CIP) to earlier application:
US 09/406,152 (CON)
Filed on 27 September 1999 (27.09.1999)

(71) Applicant *(for all designated States except US)*: **3COM CORPORATION** [US/US]; 3800 Golf Road, Rolling Meadows, IL 60008 (US).

(72) Inventors; and
(75) Inventors/Applicants *(for US only)*: **SCHUSTER, Guido, M.** [CH/US]; Apartment 408, 1433 Perry Street, Des Plaines, IL 60016 (US). **SIDHU, Ikhlaq, S.** [US/US]; 403 River Grove Lane, Vernon Hills, IL 60061 (US). **DEAN, Frederick, D.** [US/US]; 2311 N. Greenview Avenue, Chicago, IL 60614 (US). **BELKIND, Ronnen** [US/US]; 1960 Lincoln Park West #2503, Chicago, IL 60614 (US).

(74) Agent: **THYMIAN, Marcus, J.**; McDonnell Boehnen Hulbert & Berghoff, 32nd Floor, 300 South Wacker Drive, Chicago, IL 60606 (US).

(81) Designated States *(national)*: AE, AG, AL, AM, AT, AU, AZ, BA, BB, BG, BR, BY, BZ, CA, CH, CN, CR, CU, CZ, DE, DK, DM, DZ, EE, ES, FI, GB, GD, GE, GH, GM, HR, HU, ID, IL, IN, IS, JP, KE, KG, KP, KR, KZ, LC, LK, LR, LS, LT, LU, LV, MA, MD, MG, MK, MN, MW, MX, MZ, NO, NZ, PL, PT, RO, RU, SD, SE, SG, SI, SK, SL, TJ, TM, TR, TT, TZ, UA, UG, US, UZ, VN, YU, ZA, ZW.

(84) Designated States *(regional)*: ARIPO patent (GH, GM, KE, LS, MW, MZ, SD, SL, SZ, TZ, UG, ZW), Eurasian patent (AM, AZ, BY, KG, KZ, MD, RU, TJ, TM), European patent (AT, BE, CH, CY, DE, DK, ES, FI, FR, GB, GR, IE, IT, LU, MC, NL, PT, SE), OAPI patent (BF, BJ, CF, CG, CI, CM, GA, GN, GW, ML, MR, NE, SN, TD, TG).

[Continued on next page]

(54) Title: SYSTEM AND METHOD FOR INTERCONNECTING PORTABLE INFORMATION DEVICES (PDAS) THROUGH A DAA TELEPHONY SYSTEM

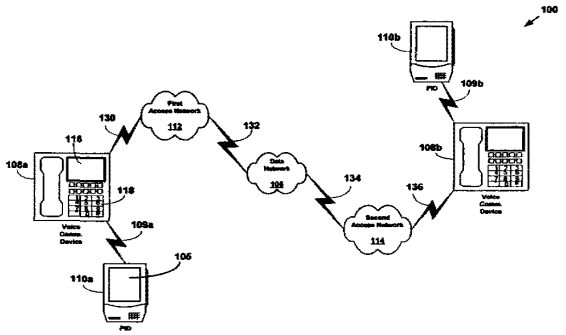

(57) Abstract: A personal information device (PID) is coupled to an IP Telephony phone in order to provide end-to-end connectivity to another PID through a network. The architecture disclosed includes a pair of internet-enabled phones that are able to establish a call session using a Session Initiation Protocol (SIP) and a Session Description Protocol (SDP). Each phone is also provided with an interface configured to communicate with a PID. Each PID is registered to a corresponding internet-enabled phone using each PID user's SIP URL. The user of a first PID connected to a first phone requests a call to a SIP URL corresponding to the user of the second PID that is connected to a second phone. The SIP URL for the user of the second PID is resolved to the network address of the second phone and connection is established between the first and second phones. The connection includes a media stream for transferring data between each of the PIDs. A data object transmitted by the first PID through its interface with the first phone is transmitted to the second phone through the media stream of the connection between the first and second phones. The data object received by the second phone is transmitted to the second PID through the interface between the second phone and the second PID.

WO 01/24503 A1

Published:
— *With international search report.*
— *Before the expiration of the time limit for amending the claims and to be republished in the event of receipt of amendments.*

For two-letter codes and other abbreviations, refer to the "Guidance Notes on Codes and Abbreviations" appearing at the beginning of each regular issue of the PCT Gazette.

SYSTEM AND METHOD FOR INTERCONNECTING PORTABLE INFORMATION DEVICES (PDAS) THROUGH A DAA TELEPHONY SYSTEM

BACKGROUND OF THE INVENTION

A. Field of the Invention

The present invention is related to a method and system for providing communication services over a network. In particular, the present invention relates to a system and method for exchanging data related to personal information device (PID) services over a telephony network.

B. Description of the Related Art

For many years, telephone service providers on the Public Switched Telephone Network (PSTN) provided their customers nothing more than a telephone line to use to communicate with other subscribers. Over time, telephone service providers have enhanced their service by providing Custom Local Area Signaling Service (CLASS) features to their customers. Similar communication services are provided by a Private Branch Exchange (PBX), which is typically implemented in a nonresidential setting.

The CLASS features permit customer subscribers of the features to tailor their telephone service according to individual needs. Some of the more popular CLASS features are:

- *Call blocking:* The customer may specify one or more numbers from which he or she does not want to receive calls. A blocked caller will hear a rejection message, while the callee will not receive any indication of the call.
- *Call return:* Returns a call to the most recent caller. If the most recent caller is busy, the returned call may be queued until it can be completed.
- *Call trace:* Allows a customer to trigger a trace of the number of the most recent caller.
- *Caller ID:* The caller's number is automatically displayed during the silence period after the first ring. This feature requires the customer's line to be equipped with a device to read and display the out-of-band signal containing the number.

Bright House Networks - Ex. 1108, Page 672

• *Caller ID blocking:* Allows a caller to block the display of their number in a callee's caller ID device.

• *Priority ringing:* Allows a customer to specify a list of numbers for which, when the customer is called by one of the numbers, the customer will hear a distinctive ring.

• *Call forwarding:* A customer may cause incoming calls to be automatically forwarded to another number for a period of time.

A customer subscriber to a CLASS feature may typically activate and/or de-activate a CLASS feature using "*" directives (e.g., *69 to automatically return a call to the most recent caller). CLASS features may also be implemented with the use of out-of-band data. CLASS feature data is typically transmitted between local Class-5 switches using the Signaling System #7 (SS7).

Local Exchange Carriers (LECs) and other similar organizations maintain CLASS offices that typically contain a database entry for each customer. The database allows specification of the CLASS features a customer has subscribed to, as well as information, such as lists of phone numbers, associated with those features. In some cases, customers may edit these lists on-line via a touch-tone interface. A list of all phone numbers that have originated or terminated a call with each customer is often included in the CLASS office database. For each customer, usually only the most recent number on this list is stored by the local Class-5 switch.

A Private Branch Exchange (PBX), is a stored program switch similar to a Class-5 switch. It is usually used within a medium-to-large-sized business for employee telephony service. Since a PBX is typically operated by a single private organization, there exists a wide variety of PBX services and features. Custom configurations are common, such as integration with intercom and voice mail systems. PBX's typically support their own versions of the CLASS features, as well as other features in addition to those of CLASS. Most PBX features are designed to facilitate business and group communications.

A summary of typical PBX features includes:

• *Call transfer:* An established call may be transferred from one number to another number on the same PBX.

- *Call forwarding:* In addition to CLASS call forwarding, a PBX number can be programmed to automatically transfer a call to another number when the first number does not answer or is busy.
- *Camp-on queuing:* Similar to PSTN call return, a call to a busy number can be queued until the callee can accept it. The caller can hang up their phone and the PBX will ring them when the callee answers.
- *Conference calling:* Two or more parties can be connected to one another by dialing into a conference bridge number.
- *Call parking:* An established call at one number can be put on hold and then reestablished from another number. This is useful when call transfer is not warranted.
- *Executive override:* A privileged individual can break into an established call. After a warning tone to the two participants, the call becomes a three-way call.

While the CLASS and PBX features have enhanced the offerings of service providers that use the PSTN, the features are nevertheless limited in their flexibility and scope. The effect to the user is that the features become clumsy and difficult to use. For example, in order to use the Call Forwarding function, the user must perform the steps at the user's own phone prior to moving to the location of the telephone to which calls will be forwarded. A more desirable approach, from the standpoint of usefulness to the user, would be to perform the steps at the telephone to which calls will be forwarded.

Much of the lack of flexibility of the PSTN features is due to the lack of flexibility in the PSTN system itself. One problem with the PSTN is that the terminal devices (*e.g.* telephones) lack intelligence and operate as "dumb" terminals on a network having the intelligence in central offices. Most PSTN telephones are limited in functional capability to converting the analog signals they receive to sound and converting the sound from the handset to analog signals.

Some PSTN telephones have a display device and a display function to display specific information communicated from intelligent agents in the PSTN network using the PSTN signaling architecture. For example, some PSTN telephones have a display function to enable the Caller ID feature. Even such PSTN telephones are limited however by the closed PSTN signaling architecture, which prohibits access by the PSTN

Bright House Networks - Ex. 1108, Page 674

telephones to the network signaling protocols. The display functions are effectively limited to displaying text, again, as a "dumb" terminal.

The Internet presents a possible solution for distributing intelligence to telephony terminal devices. In Internet telephony, digitized voice is treated as data and transmitted across a digital data network between a telephone calls' participants. One form of Internet telephony uses a telephony gateway/terminal where IP telephony calls are terminated on the network. PSTN telephones are connected by a subscriber line to the gateway/terminal at the local exchange, or at the nearest central office. This form of Internet telephony provides substantial cost savings for users. Because the PSTN portion used in Internet telephony calls is limited to the local lines on each end of the call, long distance calls may be made for essentially the cost of a local call. Notwithstanding the costs savings provided by this form of Internet telephony, it is no more flexible than the PSTN with respect to providing enhancements and features to the basic telephone service.

In another form of Internet telephony, telephones are connected to access networks that access the Internet using a router. The telephones in this form of Internet telephony may be substantially more intelligent than typical PSTN telephones. For example, such a telephone may include substantially the computer resources of a typical personal computer.

Data network telephones and the data network (*e.g.* Internet) system in which they operate, however, lack a substantial infrastructure and service providers for providing telephone service.

It would be desirable to incorporate CLASS and PBX features into a data network telephony system that uses a data network such as the Internet.

It would be desirable to provide new features and enhancements to telephony service that accommodates and conforms to users' needs.

It would also be desirable to provide features and capabilities to telephone service that create new opportunities for users and for service providers.

The present invention addresses the above needs by providing a system in a data network telephony system, such as for example, the Internet, that enables connected users to transmit user data, such as graphical data, or application-related data (*e.g.* email,

contacts data, calendar data, interactive game data, etc.), to each other across a telephony network using PIDs (Portable Information Devices) that may be linked to network communication devices. The system according to some embodiments of the present invention addresses concurrent voice and user data transmissions between users.

Bright House Networks - Ex. 1108, Page 676

BRIEF DESCRIPTION OF THE DRAWINGS

Presently preferred embodiments of the invention are described below in conjunction with the appended drawing figures, wherein like reference numerals refer to like elements in the various figures, and wherein:

FIG. 1 is block diagram of a network telephony system according to one embodiment of the present invention;

FIG. 2 is a block diagram showing a system for exchanging data related to portable information device (PID) services on a telephony system according to an exemplary embodiment of the present invention;

FIG. 3 is a block diagram of a data network telephone according to an exemplary embodiment of the present invention;

FIG. 4 is a block diagram of a PID according to an exemplary embodiment of the present invention;

FIG. 5 is a stack layer diagram showing the layers of an IrDA stack;

FIG. 6 is a block and stack layer diagram illustrating an embodiment of the protocol stacks in an exemplary embodiment of a PID linked to a data network telephone;

FIG. 7 is block and stack layer diagram illustrating an embodiment of the present invention in which a SIP call may be established;

FIG. 8 is a combined block and pictorial diagram showing a system for providing PID data exchange according to a first embodiment of the present invention;

FIG. 9 is a combined block and pictorial diagram showing a system for providing PID data exchange according to a second embodiment of the present invention; and

FIG. 10 is a combined block and pictorial diagram showing a system for providing PID data exchange according to a third embodiment of the present invention.

Bright House Networks - Ex. 1108, Page 677

DETAILED DESCRIPTION OF THE PREFERRED EMBODIMENT

The following references to patent applications filed concurrently herewith are incorporated be reference:

* "System and Method for Controlling Telephone Service Using a Wireless Personal Information Device" to Schuster, et al.
* "System and Method for Advertising Using Data Network Telephone Connections" to Schuster, et al.
* "System and Method for Providing User-Configured Telephone Service in a Data Network Telephony System" to Sidhu, et al.
* "System and Method for Accessing a Network Server Using a Portable Information Device Through a Network Based Telecommunication System" to Schuster, et al.
* "System and Method for Enabling Encryption on a Telephony Network" to Schuster, et al.
* "System and Method for Using a Portable Information Device to Establish a Conference Call on a Telephony Network" to Schuster, et al.
* "System and Method for Associating Notes with a Portable Information Device on a Network Telephony Call" to Schuster, et al.
* "System and Method for Providing Shared Workspace Services Over a Telephony Network" to Schuster, et al.
* "System and Method for Providing Service Provider Configurations for Telephones in a Data Network Telephony System" to Schuster, et al.

The following additional references are also incorporated by reference herein:

* "Multiple ISP Support for Data Over Cable Networks" to Ali Akgun, et al.
* "Method and System for Provisioning Network Addresses in a Data-Over-Cable System" to Ali Akgun, et al., Serial No. 09/218,793.
* "Network Access Methods, Including Direct Wireless to Internet Access" to Yingchun Xu, et al., Serial No. 08/887,313

A. PID-Enabled Data Network Telephony System

FIG. 1 is a block diagram showing an exemplary embodiment of a system 100 for exchanging mixed media messages according to one embodiment of the present invention. The system includes a data network 106. A first voice communication device 108a linked to a first access network 112 via connection 130 may communicate over the data network 106 by connecting via the first access network 112. A second voice communication device 108b is linked to a second access network 114 through connection 136 and may communicate over the data network 106 by connecting via the second access network 114

The data network 106 in the system 100 typically includes one or more Local Area Networks (LANs) connected to one another or to a Wide-Area Network (WAN), such as an Internet Protocol (IP) network, to provide wide-scale data connectivity. The data network 106 may use Voice Over Packet (VOP) schemes in which voice signals are carried in data packets. The network 106 may also include a connection to the Public Switched Telephone Network (PSTN) to allow for voice connections using traditional circuit switching techniques. In one embodiment, the data network 106 may include one or more LANs such as Ethernet LANs and support data transport protocols for performing Voice-over-Internet-Protocol (VoIP) techniques on the Internet. For further details regarding VoIP, see the information available through the Internet Engineering Task Force (IETF) at www.ietf.org. In addition, an Internet Telephony gateway may be included within the system 100 to allow for voice connections to users connected by subscriber lines at a PSTN Central Office.

The voice communication devices 108a-b (described further below with reference to FIG. 3) typically include a voice input, a voice output and a voice processing system. The voice processing system converts voice sound to digital data signals that are communicated on a voice connection over the data network. The voice processing system also converts digital data signals received from the voice connection to voice sound. The voice communication devices 108a-b typically include a central processing unit and memory to store and process computer programs. Additionally, each voice communication device 108a-b typically includes a unique network address, such as an IP

address, in memory to uniquely identify it to the data network 106 and to permit data packets to be routed to the device.

A first PID 110a linked to the first voice communication device 108a via connection 109a may communicate over the data network 106 by connecting via the first access network 112. A second PID 110b linked to the second voice communication device 108b via connection 109b may communicate over the data network 106 by connecting via the second access network 114. The PIDs 110a-b each contain user attributes stored in a user information data base. The user attributes may contain such information as a user identifier, schedule information, and other information that is associated with a user of the PID 110a or 110b. The PIDS 110a-b each include a user interface allowing a user to easily enter and retrieve data. In a preferred embodiment, the user interface includes a pressure-sensitive display that allows a user to enter input with a stylus or other device. An example of a PID with such an interace is a PDA (Personal Digital Assistant), such as one of the Palm™ series of PDAs offered by 3Com® Corporation. The PIDs 110a-b may include other functionality, such as wireless phone or two-way radio functionality.

Links 109a-b are point-to-point links, and may entirely or partially wireless, or they may be hard-wired connections. Each of the links 109a-b is preferably a wireless link, such as an infrared link specified by the Infrared Data Association (IrDA) (see irda.org for further information) or a radio frequency (RF) link such as the Bluetooth system (see www.bluetooth.com for further information). However, the point-to-point link can also be a hardwired connection, such as an RS-232 serial port.

In one embodiment, the voice communication device 108a includes a handset with a receiver and transmitter similar or identical to handsets of traditional circuit-switched telephones. A console on which the handset sits may include the voice processing system, a display 116, and a keypad 118.

In a preferred embodiment, a portion of the voice communication device 108a utilizes an NBX 100™ communication system phone offered by 3Com® Corporation. In alternative embodiments, the voice communication device 108a may include any device having voice communications capabilities. For example, a personal computer having a microphone input and speaker output may also be used to implement the voice

Bright House Networks - Ex. 1108, Page 680

communication device 108a. Other configurations are also intended to be within the scope of the present invention.

The details relating to operation of the voice communication devices 108a and 108b depend on the nature of the data network 106 and the nature of the access networks 112, 114 connecting the voice communication devices 108a and 108b to each other and/or to other network entities. The access networks 112, 114 typically include any high bandwidth network adapted for data communications, i.e. a network having greater than 64,000 bits-per-second (bps) bandwidth. The access networks 112, 114 may link to the voice communication devices 108a-b using an Ethernet LAN, a token ring LAN, a coaxial cable link (*e.g.* CATV adapted for digital communication), a digital subscriber line (DSL), twisted pair cable, fiberoptic cable, an integrated services digital network (ISDN) link, and wireless links. In embodiments that may not require bandwidth greater than 64,000 bps, the access networks 112, 114 may also include the PSTN and link the voice communications devices 108a-b by an analog modem. Further details regarding specific implementations are described below, with reference to FIGs. 2 through 10.

B. System for Providing PID Data Exchange Using a Data Network Telephony System

One advantage of the PDA-Enabled Data Network Telephony System 100 in FIG. 1 is that it may be used to exchange PID data. In one embodiment, the PIDs 110a is able to accept and process PID data from a user through a user interface on the PID 110a. The PID data may include any data used by the PID, such as graphical data, email, calendar data, contacts data (*e.g.* business card data), interactive game data. The PID data can be communicated across the link 109a to the voice communication devices 108a for transport across the first access network 112, the data network 106, and the second access network 114 to the voice communication device 108b. The PID 110b can receive the PID data across the link 109b for display on the PID 110b. A voice-over-data channel for communicating voice-over-data can concurrently exist with this communication of PID data over a graphical data channel. In this way, a user of the PID 110a can communicate PID data to a user of the PID 110b while voice signals are communicated between the voice communication device 108a and the voice communication device 108b.

1. Local Area Network As An Exemplary Access Network

FIG. 2 is a block diagram showing one example of the system 100 of FIG. 1 for providing PID data exchange according to the present invention. The system 200 in FIG. 2 includes a local area network 212, connected to a data network 206 by a first router 228. A cable network 214 is connected to the data network 206 by a second router 238. Those of ordinary skill in the art will appreciate that while FIG. 2 illustrates the access networks as the local area network 212 and the cable network 214, any other type of network may be used. For example, the local area network 212 and/or the cable network 214 may be replaced by ISDN, DSL, or any other high-speed data link.

The local area network 212 provides data connectivity to its network elements, such as a first data network telephone 208a, a second data network telephone 208b, and a first network telephony connection server 150. The local area network 212 in FIG. 2 is an Ethernet LAN operating according to the IEEE 802.3 specification, which is incorporated by reference herein, however, any other type of local area network may be used. The local area network 212 uses the router 228 to provide the data network telephone 208a and the first network telephony connection server 150 with access to the data network 206. For example, the router 228 may perform routing functions using protocol stacks that include the Internet Protocol and other protocols for communicating on the Internet.

The first network telephony connection server 150 provides telephony registration, location and session initiation services for voice connections in which its members are a party. A user may register for telephony service with an administrator of the first network telephony connection server 150 and receive a user identifier and a telephone identifier. The user identifier and telephone identifier may be sequences of unique alphanumeric elements that callers use to direct voice connections to the user. The first network telephony connection server 150 registers users by storing user records in a first registration database 152 in response to registration requests made by the user.

The call setup process and the user and telephone identifiers preferably conform to requirements defined in a call management protocol. The call management protocol is used to permit a caller anywhere on the data network to connect to the user identified by the user identifier in a data network telephone call. A data network telephone call

Bright House Networks - Ex. 1108, Page 682

includes a call setup process and a voice exchange process. The call setup process includes steps and message exchanges that a caller and callee perform to establish the telephone call. The actual exchange of voice signals is performed by a data communications channel. The data communications channel incorporates other data transport and data formatting protocols, and preferably includes well-known data communications channels typically established over the Internet.

The call management protocol used in FIG. 2 is the Session Initiation Protocol (SIP), which is described in M. Handley et al., "SIP: Session Initiation Protocol," IETF RFC 2543, Mar. 1999, incorporated by reference herein, however, any other such protocol may be used. Other protocols include H.323, the Media Gateway Control Protocol (MGCP), MEGACO, etc.

The network telephony connection server 150 may be used to provide telephony service for mobile users. A user may be registered to use the first network telephone 208a (which is identified by its telephone identifier), but move to a location near the second network telephone 208b. The user may re-register as the user of the second network telephone 208b. Calls that identify the user by the user's user identifier may reach the user at the second network telephone 208b.

2. Cable Network As An Exemplary Access Network

The system 200 in FIG. 2 also shows a cable network 214 connected to the data network 206 by a router 238. The cable network 214 provides data network access to its network elements, which in FIG. 2 include a third data network telephone 218a and a second network telephony connection server 162. The users of the data network telephone 218a connected to the cable network 214 may communicate over the data network 206 with the users of the data network telephones 208a-b connected to the local area network 212.

The cable network 214 includes any digital cable television system that provides data connectivity. In the cable network 214, data is communicated by radio frequency in a high-frequency coaxial cable. The cable network 214 may include a head-end, or a central termination system that permits management of the cable connections to the users.

3. Providing Telephony Services

The second network telephony connection server 162 is preferably a SIP-based server that performs call initiation, maintenance and teardown for the data network telephone 218a connected to the cable network 214. The second network telephony connection server 162 may be similar or identical to the first network telephony connection server 150 connected to the local area network 212.

The system 200 shown in FIG. 2 permits the data network telephones 208a-b connected to the local area network 212 to communicate with the data network telephone 218a connected to the cable network 214. The system shown in FIG. 2 uses SIP in order to establish, maintain, and teardown telephone calls between users.

There are two major architectural elements to SIP: the user agent (UA) and the network server. The UA resides at the SIP end stations, (e.g. the data network telephones), and contains two parts: a user agent client (UAC), which is responsible for issuing SIP requests, and a user agent server (UAS), which responds to such requests. There are three different network server types: a redirect server, a proxy server, and a registrar. The various network server types may be combined into a single server, such as the network telephony connection server 150 and 162. Not all server types are required to implement the embodiments of the present invention. The communication services to be provided will determine which servers are present in the communication system. Preferred embodiments of the present invention may be carried out using proxy servers.

One example of a SIP operation involves a SIP UAC issuing a request, a SIP proxy server acting as end-user location discovery agent, and a SIP UAS accepting the call. A successful SIP invitation consists of two requests: INVITE followed by ACK. The INVITE message contains a user identifier to identify the callee, a caller user identifier to identify the caller, and a session description that informs the called party what type of media the caller can accept and where it wishes the media data to be sent. User identifiers in SIP requests are known as SIP addresses. SIP addresses are referred to as SIP Uniform Resource Locators (SIP-URLs), which are of the form *sip:user@host.domain*. Other addressing conventions may also be used.

Bright House Networks - Ex. 1108, Page 684

Redirect servers process an INVITE message by sending back the SIP-URL where the callee is reachable. Proxy servers perform application layer routing of the SIP requests and responses. A proxy server can either be stateful or stateless. A stateful proxy holds information about the call during the entire time the call is up, while a stateless proxy processes a message without saving information contained in the message. Furthermore, proxies can be either forking or non-forking. A forking proxy can, for example, ring several data network telephones at once until somebody takes the call. Registrar servers are used to record the SIP address (the SIP URL) and the associated IP address. The most common use of a registrar server is for the UAC to notify the registrar where a particular SIP URL can be reached for a specified amount of time. When an INVITE request arrives for the SIP URL used in a REGISTER message, the proxy or redirect server forwards the request correctly.

At the local area network 212, the central registrar/proxy server, such as the first network telephony server 150, is the primary destination of all SIP messages trying to establish a connection with users on the local area network 212. Preferably, the first network telephony server 150 is also the only destination advertised to the SIP clients outside the LAN 212 on behalf of all the SIP clients residing on the LAN 212. The network telephony server 150 relays all SIP INVITE messages to the appropriate final destination (or another SIP proxy), based on a database lookup using the first SIP database 152. It allows all mobile clients to register with their current locations.

Similarly, the second network telephony server 162 is the primary destination of all SIP messages trying to establish a connection with the data network telephone 218a connected to the cable network 214. Preferably, the second network telephony server 162 is also the only destination advertised to the SIP clients outside the cable network 214 on behalf of all the SIP clients (*e.g.* data network telephones) residing on the cable network 214. The second network telephony server 162 relays all SIP INVITE messages to the appropriate final destination (or another SIP proxy), based on a database lookup using the second SIP database 164.

The data network telephones 208a-b and 218a in the system 200 preferably have pre-programmed device identifiers (*e.g.* phone numbers), represented as SIP-URL's that are of the form *sip: user@domain.* An example is *sip: 8475551212@3Com.com.*. After

power-up, each of the data network telephones 208a-b and 218a sends a SIP REGISTER message to the default registrar, such as the network telephony servers 150 and 162. When a call arrives at one of the network telephony servers 150 or 162 for any of the registered SIP URLs, the server will forward the call to the appropriate destination. If a data network telephone is moved to a new location, all calls to the associated SIP URL will still be properly routed to that device. In other words, the system in FIG. 2 provides device mobility in the sense that calls will "follow" the data network telephone according to its SIP URL. This is especially useful if the data network telephone 208a-b or 218a is running the DHCP (Dynamic Host Configuration Protocol) so that when the location is changed, the IP address is also automatically changed.

An advantage of the system in FIG. 2 is that once the call is established between data network telephones, the data network 206 provides data connectivity for a plurality of data communications channels. For example, the data network telephones 208a and 218a can communication voice signals as voice-over-data packets on a voice-over-data channel. The data network telephones 208a and 218a can also communicate graphical data (or other PID data) as graphical data packets on a graphic data channel. For example, the graphical data may be communicated to and from the PIDs 210a and 220a across links 209a and 219a to the data network telephones 208a and 218a, where graphical data is packetized and depacketized as part of the process for communicating the graphical data packets across the data network 206 and any access networks, such as the Ethernet LAN 212 and the cable network 214.

4. The Data Network Telephones

The data network telephones 208a-b are preferably telephones that include an Ethernet communications interface for connection to an Ethernet port. The Ethernet phones in FIG. 2 support the Internet Protocol (IP), using an IP address that is either statically configured or obtained by access to a Dynamic Host Configuration Protocol (DHCP) server.

FIG. 3 is a block diagram showing the data network telephone 208a connected to the local area network 212 in FIG. 2. The data network telephone 208a in FIG. 3 is connected to the network 212 by a network interface 270. The network interface 270

may, for example, be a network interface card, and may be in the form of an integrated circuit. A bus 248 may be used to connect the network interface 270 with a processor 240 and a memory 242. Also connected to the processor are user interface circuitry 260 and three alternative link interfaces to a PID, such as the PID 210a.

A first link interface 248 includes an RS-232 serial connection and associated coupling hardware and mechanisms. The first alternative link interface 248 may, for example, be a docking cradle for a PDA (Personal Digital Assistant), in which information can be transferred between the PDA and the data network telephone 208a. The second alternative link interface comprises a first connection 254, such as an RS-232 connection, along with infrared circuitry 250 for converting signals into infrared output and for accepting infrared input. An infrared interface 252 may also be included within the second alternative link interface. The third alternative link interface comprises a first connection 256, such as an RS-232 connection, along with radio-frequency circuitry 258 for converting signals into radio frequency output and for accepting radio frequency input. A radio frequency interface 259 may also be included as part of the third alternative link interface.

The three alternative link interfaces described above are merely examples, and additional means for implementing the link interface between the data network telephone 208a and the PID 210a may also be used. Although three link interfaces are shown in FIG. 3, there may be only one such interface in the data network telephone 208a. More than one link interface may be included to improve flexibility and to provide redundancy in case of failure of one of the link interfaces.

The user interface circuitry 260 includes hardware and software components that access the functions of the handset, display, and keypad to provide user input and output resources for functions in the processor 240. The user interface circuitry includes a display interface 262, a keypad interface 264, an audio output interface 265, and an audio input interface 267.

The audio input interface 267 may receive voice signals from a microphone or other audio input device and convert the signals to digital voice information. The conversion preferably conforms to the G.711 *ITU Standard*. Further processing of the digital signal may be performed in the audio input interface 267, such as providing

Bright House Networks - Ex. 1108, Page 687

compression (*e.g.* using G.723.1 standard) or providing noise reduction, although such processing may also be performed in the processor 240. Alternatively, the audio input interface 267 may communicate an analog voice signal to the processor 240 for conversion to digital information within the processor 240.

The audio output interface 265 receives digital information representing voice from the processor 240 and converts the information to audible sound, such as through a magnetic speaker. In one embodiment, the audio output interface 265 receives information in the form of G.711, although other processing such as decompression may be performed in the audio output interface 265. Alternatively, the processor 240 may convert digital information to analog voice signals and communicate the analog voice signals to the audio output interface 265.

The keypad interface 264 and the display interface 262 include well-known device interfaces and respective signal processing techniques. The user interface circuitry 260 may support other hardware and software interfaces. For example, a videophone implementation might also include a camera and monitor. The data network telephones of the present invention are not limited to telephones or videophones – additional user interface types, for example, such as the ones needed for computer games, are also contemplated as being within the scope of the present invention. In addition, some of the features described here, such as the display interface 262, are optional and serve to enhance the functionality of the first data network telephone 208a.

The processor 240 may consist of one or more smaller processing units, including, for example, a programmable digital signal processing engine. In the preferred embodiment, the processor is implemented as a single ASIC (Application Specific Integrated Circuit) to improve speed and to economize space. The processor 240 also may include an operating system, and application and communications software to implement the functions of the data network telephone 208a. The operating system may be any suitable commercially available embedded or disk-based operating system, or any proprietary operating system.

The processor 240 includes a media engine 241 and a signaling stack 243 to perform the primary communications and application functions of the data network telephone 208a. The purpose of the signaling stack in the exemplary data network

Bright House Networks - Ex. 1108, Page 688

telephone 208a is to set up, manage, and tear down a call. During the setup phase, a user may use the keypad to enter a user identifier to call. Alternatively, a PID such as PID 210a may transmit the user identifier of the party across the first link 209a. The signaling stack 243 receives the user entry and formats a request message to send to the user identified by the user identifier to initiate a telephone call. When the request message is sent, the location of the user identified by the user identifier is discovered, communication parameters, such as the supported voice CODEC types are exchanged, and a voice-over-data channel is established. During the management phase, for example, other parties may be invited to the call if needed. During the tear down phase, the call is terminated.

The signaling protocol used in the data network telephone 208a in FIG. 3 is the SIP protocol. In particular, the signaling stack implements a User Agent Client 244 and a User Agent Server 242, in accordance with the SIP protocol. Alternative signaling protocols, such as the ITU-T H.323 protocol, MGCP, MEGACO, and others, may also be used to implement the present invention.

Once the call is set up, the media engine 241 manages the communication over one or more data communications channels using network transport protocols and the network interface 270. The media engine 241 sends and receives data packets having a data payload for carrying data and an indication of the type of data is being transported. The media engine 241 in the data network telephones 208a may sample the voice signals from the audio input 267 (or receive voice samples from the audio input 267), encode the samples, and build data packets on the sending side. On the receiver side, in addition to performing the reverse operations, the media engine also typically manages a receiver buffer to compensate for network jitter. Similar procedures may be performed for other types of data, such as graphical data, or for data used in PID applications such as email, contacts data, calendar data, other non-voice sound data, interactive game data, etc.

The media engine 241 may also include hardware and software components for performing registration functions 247, voice-over-data functions 249, display data functions 251, and keypad output functions 253. The media engine 241 processes data that is received from the network 212, and data to be sent over the network 241.

Bright House Networks - Ex. 1108, Page 689

For data that is received from the network 212, the media engine 241 may determine from the type of data in the packet (such as by examining a packet header) whether packets contain sampled voice signals or other data types. Packets containing sampled voice signals are processed by the voice-over-data function 249. The voice-over-data function 249 preferably conforms to a protocol for formatting voice signals as digital data streams. While any suitable protocol may be used, the media (i.e. the voice signal) is preferably transported via the Real Time Protocol (RTP), which itself is carried inside of UDP (User Datagram Protocol). RTP is described in H. Schulzrinne et al., "RTP: A Transport Protocol for Real-Time Applications," IETF RFC 1889, Jan. 1996, which is incorporated herein by reference. UDP is described in J. Postel, "User Datagram Protocol," IETF RFC 768, Aug. 1980, and IP is described in J. Postel, ed., "Internet Protocol," IETF RFC 791, Sept. 1981, both of which are incorporated by reference herein.

Packets containing data for use in registering the data network telephone 208a with a network telephony service are processed by the registration function 247. By registering the data network telephone 208a, a user may establish with the network telephony connection server 150 that calls addressed to the user's user identifier may be connected to the data network telephone 208a. Registration may occur when the data network telephone 208a sends a request to register to a service provider host, such as the network telephony connection server 150. The service provider host may respond by setting the user's user identifier to correspond to the telephone identifier of the data network telephone 208a, and by acknowledging the request with a status message to the data network telephone 208a. In one embodiment, a request to register the data network telephone 208a to a default user is automatically sent during power-up of the data network telephone 208a.

Other features may be added to the registration functions 247, or implemented as extensions to the registration functions 247. For example, the first data network telephone 208a may be provisioned to provide selected network telephony services by establishing a data connection with a service provider, requesting the selected services, and receiving data that ensures that the services have been successfully provisioned. Such services may include, for example, caller identification, call forwarding, voice mail

and any other services offered by the network telephony service provider to enhance the capabilities of the first data network telephone 208a. One advantage of provisioning functions is that services may be ordered for temporary use in a manner convenient to the user.

Packets containing data for display on a display device of the data network telephone 208a are processed by the display data function 251. The display data function 251 may be used for displaying, for example, the names and user identifiers of other parties to the call, the status of the telephone call, billing information, and other information.

For data to be sent over the data network 212, the media engine 241 formats the data as data packets in accordance with a selected protocol. The selected protocol is preferably a protocol that is supported by data network telephones that will receive the data being transported.

The voice-over-data function 249 formats voice samples according to the protocol used by the receiving data network telephone. In one preferred embodiment, the voice over data function 249 formats voice samples as RTP packets. The registration function 247 and the keypad output function 253 may control the transport of data that does not represent voice signals.

The data network telephones 208b and 218a are preferably similar or identical to the data network telephone 208a. For each of the data network telephones 208a-b and 218a, many of the features described in FIG. 3 are optional and their inclusion depends on the services to be offered.

5. The Portable Information Devices (PIDs)

FIG. 4 is a block diagram showing the exemplary PID 210a that can communicate via the link 209a with the data network telephone 208a connected to the LAN 212. The PID 210a may be linked to the data network telephone 208a through a link interface 545. A bus 580 may be used to connect the point-to-point interface 545 with a processor 540, a memory 542, data storage 543, and user interface circuitry 544.

Bright House Networks - Ex. 1108, Page 691

The link interface 545 shown in FIG. 4 illustrates three alternative link interfaces for establishing a link to a data network telephone, such as the data network telephone 208a.

A first link interface 546 includes an RS-232 serial connection and associated coupling hardware mechanisms. The first alternative link interface 546 may, for example, be for coupling with a PDA docking cradle, in which information can be transferred between the PDA and the data network telephone 208a. The second alternative link interface comprises a first connection 548, such as an RS-232 serial connection, along with infrared circuitry 250 for converting signals into infrared output and for accepting infrared input. An infrared interface 552 may also be included within the second alternative link interface. The third alternative link interface comprises a first connection 554, such as an RS-232 connection, along with radio-frequency circuitry 556 for converting signals into radio frequency output and for accepting radio frequency input. A radio frequency interface 558 may also be included as part of the third alternative interface. The radio interface 554/556/558 may be implemented according to the Bluetooth specifications, described at www.bluetooth.com.

The three alternative link interfaces described above are merely examplary, and additional means for implementing the interface between the PID 210a and the data network telephone 208a may also be utilized. Although three link interfaces are shown in FIG. 4, there may be only one such interface in the PID 210a. More than one link interface may be included to improve flexibility and to provide redundancy in case of failure of one of the link interfaces.

The user interface circuitry 544 includes hardware and software components that provide user input and output resources for functions in the processor 540. The user interface circuitry includes a display output 562, a display input 565, and an additional input/output interface 567.

The display output 562 preferably receives digital information representing graphical data from the processor 540 and converts the information to a graphical display, such as text and/or images, for display on a display screen, for example.

The display input 565 may receive data inputs, such as graphical data inputs, from a user of the PID 210a. The graphical data inputs are preferably entered by the user with

Bright House Networks - Ex. 1108, Page 692

a stylus on a pressure-sensitive display screen, and may include text, drawings, or other objects that are capable of being graphically presented.

The additional input/output interface 567 allows the user to enter other types of data besides graphical data into the PID 210a. For example, audio data, additional graphical data, or additional input, such as video camera input for example, may be entered through the additional input/output interface 567. The data may also include data formatted for operation with particular applications on the PID. For example, email data, calendar data, contacts data, database data, spreadsheets, notes, game data, etc. may also be entered. Touch-sensitive screen buttons are an exemplary method for a user to enter control data into the PID 210a.

The processor 540 may include an operating system, as well as application and communication software, to implement the functions of the PID 210a. The operating system may be any suitable commercially available operating system, or any proprietary operating system. The operating system and software may be stored on data storage 543, in the memory 542, or the may be embedded in the processor 540. Although the processor 540 is shown connected to the data storage 543 through a bus 580, other configurations may also be used. Similarly, the memory 542 may be configured other than as shown in FIG. 4, and may be embedded within the processor 540.

The PID 210a is able to send data to and receive data from the data network telephone 208a across a point-to-point link, such as the point-to-point link 209a shown in FIG. 1. A user enters PID data at the display input 565. The graphical data may be processed in the user interface circuitry 544 or it may go directly to the processor 540 or the memory 542. The processor 540 may also perform processing functions, such as compression.

A PID data application may be used to perform functions that may implement the display input, the display output, and the processing functions. For example, a contacts application may be used to accept and maintain user input consisting of information about the user's personal or business contact. The information, or contacts data is provided by the user at the display input 565 with a stylus on the display screen of a PDA. The contacts application could then display the contacts data through the display output 562 to enable the user to see a visual representation of the user input.

Bright House Networks - Ex. 1108, Page 693

If the user desires to share the contacts data with a second user on the system 200, where the second user is using a second PID such as PID 220a, the contacts data from the contacts application can be transmitted through one of the point-to-point interfaces 545, allowing the data to be received by the data network telephone 208a. An application in the data network telephone 208a receives the contacts data across the point-to-point link, and the contacts data is prepared for transmission across the data network 206, such as by the media engine 241 shown in FIG. 3. Preferably the contacts data is converted to data packets and is communicated on a data channel across the LAN 212 through the router 228 across the data network 206 through the second router 238 across the cable network 214 to the third data network telephone 218a. The third data network telephone 218a converts the data packets received on the data channel into the contacts data. The contacts data is then transmitted across a point-to-point link to the second PID 220a, where it may be displayed on a display screen on the PID 220a. The PID 220a may contain a similar contacts program as that which was referenced to the PID 210a, allowing the user of the PID 220a to modify the information and transmit the modifications back across the point-to-point link to the third data network telephone 218a across the cable network 214 through the second router 238 across the data network 206 through the first router 228 across the LAN 212 to the first data network telephone 208a across the point-to-point link and back to the first PID 210a.

The point-to-point link 209a may be a serial bit stream between an application in the first PID 210a and an application in the first data network telephone 208a. For example, the link 209a could be an infrared link that is implemented with minimal stack interpretation. However, the link 209a between PID 210a and the first data network telephone 208a can alternatively be implemented as an infrared link using all or parts of a specialized protocol, such as the Infrared Data Association (IrDA) protocol stack, where data is interpreted through the stack between application-layer processes at each end of the link.

FIG. 5 is a protocol diagram illustrating the layers of the IrDA protocol stack. An IrDA stack is implemented at each of the connection endpoints of an IrDA link. For example, the first PID 210a and the first data network telephone 208a could each implement an IrDA protocol stack to enable the link 209a. As a second alternative, two

Bright House Networks - Ex. 1108, Page 694

PIDs, such as the first PID 210a and the third PID 218a, may each contain an IrDA stack. In the second alternative, the communications between the PIDs and the data network telephones might take place without the assistance of IrDA. For example, IrDa data from the first PID 210a might be transmitted across the link 209a as a serial stream of data to the first data network telephone 208a, which might treat the IrDA data like any other data received from the first PID 210a. The first data network telephone 208a could then assemble the IrDA data into packets, such as TCP/IP packets for transport across the access and data networks to the third data network telephone 218a. The third data network telephone 218a may disassemble the packets and forward the IrDA data (without interpreting the IrDA portions) across the link 219a to the third PID 220a. The third PID 220a could then process the IrDA information received across the networks.

The required layers of an IrDA protocol stack are the physical layer 602, the IrLAP layer 604, the IRLMP layer 606 and the IAS layer 608. The physical layer 602 specifies optical characteristics of the link, encoding of data, and framing for various speeds. The IrLAP (Link Access Protocol) layer 604 establishes the basic reliable connection between the two ends of the link. The IrLMP (Link Management Protocol) layer 606 multiplexes services and applications on the IrLAP connection. The IAS (Information Access Service) layer 608 provides a directory or "yellow pages" of services on an IrDA device.

The IrDA protocol also specifies a number of optional protocol layers, these protocol layers being TinyTP 610, IrOBEX 612, IrCOMM 614 and IrLAN 616. TinyTP (Tiny Transport Protocol) 610 adds per-channel flow control to keep traffic over the IrDA link moving smoothly. This important function is required in many cases. IrOBEX (Infrared Object Exchange protocol) 612 provides for the easy transfer of files and other data objects between the IrDA devices at each end of the link. IrCOMM 614 is a serial and parallel port emulation that enables existing applications that use serial and parallel communications to use IrDA without change. IrLAN (Infrared Local Area Network) 616 enables walk-up infrared LAN access for laptops and other devices. The use of the optional layers depends upon the particular application in the IrDA device. The IrDA protocol stack is defined by such standards documents as "IrDA Serial Infrared Physical Layer Link Specification", "IrDA 'IrCOMM': Serial and Parallel Port Emulation over IR

(Wire Replacement)", "IrDA Serial Infrared Link Access Protocol (IrLAP)", "IrDA Infrared Link Management Protocol (IrLMP)", and "IrDA 'Tiny TP': A Flow-Control Mechanism for use with IrLMP", and related specifications published by the IrDA and available at http://www.irda.org/standards/specifications.asp and is incorporated by reference herein.

The IrDA protocol stack can be implemented at just the PID devices at the endpoints with the intermediate phones and networks simply providing a tunnel for the media stream attendant to the infrared links. Since PIDs, such as the Palm PDA, already have an IrDA stack implemented in them to support their infrared link to other devices and the benefits of the IrDA stack are already available. By using the layers of the IrDA protocol stack, the PID applications and the base applications in the phones can be simplified as the IrDA protocol layers take over certain functionalities. For example, the IrOBEX layer in each IrDA protocol stack can be used to transfer text and graphics object files, such as electronic business cards or whiteboard graphics, end-to-end between PID devices connected via data connected data network telephones..

With the IrDA stack being implemented only in the PIDs and not in the phones, only a small level of delay is introduced for stack interpretation by each PID and the connection provided is largely transparent to the applications in the PID devices, i.e. little or no modification to existing user applications in the PIDs is required. This approach may be more suitable for delay sensitive applications, such as interactive games involving the transfer of data between user applications in each PID.

It should be noted that the IrDA stack is written for a single infrared point-to-point interface and not for an infrared-to-network-to-infrared interface. As a result, the timers and retransmission schemes implemented in view of the single infrared point-to-point interface may not function properly for the extended network interface.

Alternatively, IrDA stacks can be implemented in the phones as well. By implementing IrDA stacks in the phones, the timing of the infrared interface is unaffected by a network delay. Also, additional functions and features can be implemented in the phones. For example, the phones can implement challenge and authentication where the phone requires the user, through the PID, to enter a password or other information to authenticate an authorized user. Similarly, the PID may also be used to transmit

Bright House Networks - Ex. 1108, Page 696

commands to the phone and receive status information via the IrDA stack. The approach taken will depend upon the requirements of the design and the particular application.

6. Providing Telephony and PID Data Exchange

FIG. 6 is a functional block diagram and protocol stack diagram illustrating an embodiment of the protocol stacks in the first PID 210a and the first data network telephone 208a that support link 209a. In the infrared RS-232 embodiment, the link interface circuitry 545 in the first PID 210a provides the physical layer 656, such as that specified by the Infrared Data Association (IrDA), that connects via link 209a to the link interface circuitry 260 implementing a physical layer 664 in the first data network telephone 208a. The data link layer 654 in the first PID 210a provides data link control for link 209a in transferring data to and from a PID application client 652. Similarly, the first data network telephone 208a includes a data link layer 662 and a base application server 600 that is configured to synchronize connection and other functions with the PID application 652 in the first PID 210a.

When PID 210a is activated, either through power-up or through a user input at the user interface 650, the synchronization application client 652 in the PID 210a may send the user's SIP URL across the link 209a to the first data network telephone 208a, where it is received by the synchronization application server 600. The synchronization application server 600 sends the SIP URL received from the PID 210a across connection 230 and the Ethernet LAN 212 through connection 243 to the network telephony connection server 150. The network telephony connection server 150 may store the SIP URL and the IP address of the associated data network telephone 208a in the SIP database 152 so that the SIP URL is listed as being resident at the IP address of the data network telephone 208a. (If the network telephony connection server 150 uses a location server for registration/location tasks, the registration information might instead be stored with such a location server). SQL (Structured Query Language) is preferred for querying the database. Once the PID 210a is registered with the network telephony connection server 150, calls to the SIP URL for PID 210a (or the user of the PID 210a) will be directed to the data network telephone 208a.

Bright House Networks - Ex. 1108, Page 697

FIG. 7 is a functional block and protocol stack diagram illustrating an embodiment of the present invention where a SIP connection is established from the first data network phone 208a to the third data network phone 218a through network connection 230, first access network 212, data network 206, second access network 214 and network connection 236. The routers 228 and 238, and associated connections 232a-b and 234a-b, are not shown to simplify the block diagram representation.

The diagram of FIG. 7shows how PID data from a PID application can be passed from one PID to another PID in one aspect of the present invention. The PID application 652 in PID 210a is configured to send PID data input through the user interface 650 through link 209a to base application 660 in the first data network phone 208a. In this embodiment, base application 660 is configured to define data channels for transport to the third data network telephone 218a.

Multiple data channels in SIP may be defined through the Session Description Protocol described in RFC 2327, herein incorporated by reference. Included in a SIP INVITE request for a connection are options for the requested connection that describe the number and type of media streams. Each media stream is described by a "m=" line in the INVITE request. For example, a request for a connection that includes an audio stream and a bidirectional video stream using H.261 might look like this:

```
v=0
o=alice 2890844526 2890844526 IN IP4 host.anywhere.com
c=IN IP4 host.anywhere.com
m=audio 49170 RTP/AVP 0
a=rtpmap:0 PCMU/8000
m=video 51372 RTP/AVP 31
a=rtpmap:31 H261/90000
```

TABLE 1.

If the called device includes functionality to receive the connection as described in Table 1, then the called device will respond to the INVITE request with a 200 OK response that includes the same option values. If the called device or party is unable or

unwilling to receive such a connection, then it will respond with alternative option values for the connection. See RFC 2543 for further details regarding the negotiation of connection parameters in SIP.

In FIG. 7, a first data channel for voice data and a second data channel for PID data have been negotiated by the base applications 660 in the first data network telephone 208a and the base application 674 in the second data network telephone 218a. The base applications 660 and 674 transfer voice data between the AUDIO applications, such as applications including G.711 encoders, in each phone via the first data channel. The base application 660 in phone 208a is also configured to send the PID data received via link 209a from PID 210a to the base application 674 in phone 218a via the second data channel. The base application in phone 218a is configured to forward the PID data received via the second data channel to PID 220a via link 219a. The PID application 688 in PID 220a then outputs the user data received from phone 218a to the user interface 686 for output to the user of PID 220a. Depending on the particular application being used in the PID 220a, the PID data may also be used in application functions.

The PID data in FIG. 7 can take a variety of forms. For example, the PID data can be a text file containing information about the user of PID 210a, such as an electronic business card. The PID data can also be drawing data generated by graphical applications in the PIDs 210a and 220a whereby a user drawing on a touchscreen of the user interface 650 in PID 210a generates corresponding PID data that is transmitted via the second data channel to PID 220a for display on the user interface 686 of PID 220a. The media description for the media stream can be defined during connection setup to establish a connection appropriate to the type of data being transferred. These examples represent just a few of the applications for this aspect of the present invention and should not be viewed as limiting the present invention.

In one embodiment, RTP data packets for two or more types of data are exchanged between the first data network telephone 208a and the second data network telephone 218a according to one of three possible methods. In the first method, one RTP data channel (or RTP stream) on UDP carries data packets in which both data types are present in a single split packets. Each such split packet contains (1) a source port number and a destination port number in the UDP portion, and (2) a special payload sequentially

Bright House Networks - Ex. 1108, Page 699

including each of the data types in the RTP portion. The special payload type can be defined in the SDP described with reference to FIG. 6. Other information is also contained in each packet as well. In the second method for transmitting two or more data types, a separate RTP over UDP data channel is created for each of the different data types, and the RTP header indicates which type of data is contained in each packet. For example, voice data coded as G.711 might be assigned a payload type code of 0, while PID data is assigned a payload type code of 190. In the third method for transmitting two or more data types, a single RTP/UDP data channel (RTP/UDP stream) is created that contains data packets of two or more different types. In this method, the data types are identified in a payload type field in the RTP header of each packet, enabling an underlying application to identify which data packets are voice data packets and which data packets are PID data packets, for example.

C. Providing PID Data Exchange Concurrent with Voice Services

FIGs. 8-10 are block diagrams illustrating exemplary embodiments of the present invention. Various elements within FIGs. 8-10 are similar to or identical to elements in FIG. 2, and accordingly share common reference numerals. Although only two PIDs 210a and 220a are shown in FIGs. 8-10, this is not intended to be limiting. More than two PIDs may be involved in a session. The quantity of PIDs is limited by the bandwidth of the access and data networks, and the characteristics of the data to be utilized in the shared environment. To communicate with additional PIDs, additional data channels are created by the data network telephones.

1. Non-Continuous PID Data Transmission with Separate Data Channels for PID Data and Voice Data

FIG. 8 shows an exemplary embodiment of the present invention in which separate data channels are used for PID data and voice data, and in which PID data may be transmitted on a non-continuous basis. The first PID 210a includes a display screen 702, a stylus 700 that a user can use to enter PID data into the first PID 210a, and an SYNC button 718.

The display screen 702 is shown as a pressure-sensitive display screen in which the stylus 700 can be used to enter PID data 714 into the first PID 210a. In the example shown in FIG. 8, the PID data 714 consists of a drawing 704 that is a tic/tac/toe game. The stylus is being used to draw a modification 706 (an "O") as part of a tic/tac/toe game with a user of the second PID 220a. The second PID 220a also contains a display screen 708, a SYNC button 720, and a stylus, which is not shown in FIG. 8. The display screen 708 on the second PID 220a also displays the drawing of the tic/tac/toe game between the user of the first PID 210a and the user of the second PID 220a.

In the embodiment shown in FIG. 8, the modification 706 to the drawing 704 is not transmitted continuously as the modification is being made by the stylus 700. Instead, the PID data 714, including the modification 706, is only transmitted when the user of the first PID 210a synchronizes the first PID 210a with the first data network telephone 208a. For example, the user may synchronize the first PID 210a by pressing the SYNC button 718 to cause the PID data 714 to be transmitted across the link 209a to the first data network telephone 208a. As a second example, a predefined stylus-stroke may be executed by the user of the stylus 700 to the display screen 702 to cause the PID data 714 to be transmitted to the first data network telephone 208a. An example of a stylus-stroke is a long stroke from the bottom to the top of the display screen 702. In an alternative aspect of this embodiment of the invention, a PID application 652, such as a drawing application, may periodically transmit the PID data 714 at predefined time intervals to the first data network telephone 208a. If the predefined time intervals are short, the transmission of the PID data 714 will approach the appearance of a continuous transmission of the PID data from the first PID 210a to the first data network telephone 208a.

When the first data network telephone 208a receives the PID data 714, an application within the first data network telephone 208a will place the PID data 714 into PID data packets for transmission to the second data network telephone 218a across the access and data networks 212, 206 and 214 (and any associated connections and routers). The second data network telephone 218a then removes the received PID data 716, the PID data packets and transmits the PID data 716 across the second link 219a to the second PID 220a for display on the display screen 708. The PID data packets

Bright House Networks - Ex. 1108, Page 701

communicated between the first and second data network telephones 208a and 218a are on a PID data channel 724. In the exemplary embodiment of FIG. 8, the PID data channel 724 is the second of two data channels. A voice-over-data channel 722 is the first data channel between the first data network telephone 208a and the second data network telephone 218a. The voice-over-data channel 722 carries voice-over-data packets assembled by the data network telephones 208a and 218a that contain voice signals 726 and 728 spoken by the users of the PIDs 210a and 220a. As a result of the dual data channels, the users of the PIDs 210a and 220a may participate in a conversation while they are playing their tic/tac/toe game in the example shown.

One advantage of the examples described herein of the present invention is that the PID data is not limited to graphical or image data. The type of data transmitted conforms to the application being used. For example, in the example described above with reference to FIG. 8, the tic-tac-toe game may be played with a tic-tac-toe game application as opposed to simply a drawing program. The tic-tac-toe game may determine the winner and draw the line through the winning row or column. The game may also keep a record of games won v. games lost for each user.

The PID data channel 724 is shown as being transported by using TCP over IP. This is merely one method for transporting the graphical data packets. Other transport protocols may also be used. A TCP/IP implementation may be particularly advantageous for non-continuous graphical data transmission embodiments of the present invention. This is due to TCP's congestion avoidance mechanisms. Therefore, if PID data packets are being lost (which may be the result of a congested network), TCP may reduce the transmission packet size (the window) to alleviate some of the congestion and to provide better performance. By reducing the quantity of PID data on such a congested network, the other network traffic (such as the voice data) should also experience better performance (fewer lost packets, etc.), which can be important for voice data applications. The voice-over-data channel 722 is shown as an RTP/UDP/IP channel. Such a channel will be described in more detail with reference to FIG. 9.

Note that with the non-continuous PID data transmission embodiment of the present invention, when a user inputs PID data into the first PID 210a, the PID data does not appear on the display screen of the second PID 220a until the PID data 714 is

transmitted to the first data network telephone 208a. Therefore, in FIG. 8, the user has begun making a modification 706 to the drawing 704, but has not synchronized the PID 210a with the first data network telephone 208a. As a result, the drawing 710 on the display screen 708 of the second PID 220a does not yet contain the modification 706 (see the open box 734). When the user of the first PID 210a has completed the modification 706 and has synchronized the PID 210a with the first data network telephone 208a, the PID data will be transmitted through the data network telephone 208a through the access and data networks 212, 206 and 214, through the second data network telephone 218a and to the second PID 220a in the box 734 on the display screen 708 of the second PID 220a.

2. Continuous PID Data Transmission with Separate Data Channels for PID Data and Voice Data

FIG. 9 is a block diagram showing a second exemplary embodiment of the present invention. This embodiment differs from the embodiment illustrated by the example of FIG. 8 because PID data is continuously transmitted from the PID 210a across the first link 209a to the first data network telephone 208a, where it is packetized and transported across the access and data networks to the second data network telephone 218a. At the second data network telephone 218a, the PID data packets are disassembled, and PID data 716 is sent to the second PID 220a for display on the display screen 708 of the second PID 220a. Therefore, the user of the second PID 220a is able to see the modification 712 as the modification 706 is being drawn by the user using the stylus 700 on the first PID 210a, although there may be some network delay and delay due to the packet assembly and disassembly operations.

To accomplish the continuous transmission of PID data 714 from the first PID 210a to the first network communication device 208a, the PID application 652 continuously transmits PID data, such as pixel information, to the data network telephone 208a as the PID data is received by the PID 210a through the user interface 650. The base application 660 in the first data network telephone 208a receives the PID data transmitted by the PID 210a and converts the PID data into PID data packets for transmission on a PID data channel 730. The PID data channel 730 is shown as being

transported across the access and data network 212, 206, and 214 using the RTP protocol over UDP which is on top of IP. Other protocol implementations may also be used, but the continuous nature of the PID data transmission in the example of FIG. 9 lends itself well to the use of RTP/UDP/IP. Similarly, the voice-over-data channel 722 is also shown as an RTP/UDP/IP channel, to take advantage of the real-time properties of voice data 726 and 728.

3. Continuous PID data Transmission with a Mixed-Media Data Channel for PID data and Voice Data

FIG. 10 is a block diagram showing a third exemplary embodiment for providing PID data exchange concurrently with voice services in which PID data 714 is continuously transmitted from the first PID 210a to the first data network telephone 208a for transport across the access and data networks 212, 206, and 214 to the second data network telephone 218a, where PID data 716 is then transmitted to the second PID 220a for display on the display screen 708 of the second PID 220a. As in the exemplary embodiment shown in FIG. 9, a graphical modification 706 on the first PID 210a is continuously transmitted as the modification is being made so that similar representation of the modification 712 appears on the second display screen 708 on the second PID 220a, after processing and propagation delays.

The main difference between the embodiment of FIG. 9 and the embodiment of FIG. 10 is that in FIG. 10 PID data 714 and the voice data 726 are transported across a single data channel. The first data network telephone 208a receives the voice data 726 and the PID data 209a through the user interface circuitry 260 and one of the link interfaces, such as the infrared link interface 252/250/254 as shown in FIG. 3. The processor 240 (or a portion of the processor 240, such as media engine 241) assembles a data packet, such as an RTP packet, in which the payload consists of a portion that represents the voice data 726 and a second portion that represents the PID data 714. The header of the RTP packet contains a "payload type" field, which is a 7-bit field identifying the format of the RTP payload and which determines the payload's interpretation by an application. RTP allows a profile to specify a default static mapping of payload type codes to payload formats. Additional payload type codes may be defined

Bright House Networks - Ex. 1108, Page 704

dynamically through non-RTP means. All that is required is that the receiving device, such as the second data network telephone 218a, be able to disassemble the mixed media packet into voice data 728 and PID data 716. Although RTP has been described for implementing the mixed media, data packets, other similar protocols may also be used.

While the invention has been described in conjunction with presently preferred embodiments of the invention, persons of skill in the art will appreciate that variations may be made without departure from the scope and spirit of the invention. For example, the access networks shown in FIG. 2 may comprise any other suitable type of local area network or service infrastructure.

In addition, protocols of various types are referenced throughout. While preferred and alternative embodiments may implement selected protocols, any suitable replacement protocol not mentioned, or any function not part of a protocol used to replace a corresponding function from a protocol may be implemented without departing from the scope of the invention.

This true scope and spirit is defined by the appended claims, interpreted in light of the foregoing.

Bright House Networks - Ex. 1108, Page 705

WE CLAIM:

1. A system for exchanging data on a data network telephony system comprising:

a data network to provide data connectivity for a plurality of data communications channels using data transport protocols;

first and second data network telephones connected to the data network, each data network telephone operable to communicate a voice signal as voice-over-data packets on a voice-over-data channel, the voice over data channel being one of the plurality of data communications channels on the data network, the data network telephones operable to convert voice-over-data packets communicated on the voice-over-data channel to voice signals;

a first portable information device comprising a first graphical user interface and a first data network telephone interface, the first graphical user interface operable to accept and display PID data, the first data network telephone interface operable to communicate PID data to and from the first data network telephone; and

a second portable information device comprising a second graphical user interface and a second data network telephone interface, the second graphical user interface operable to accept and display PID data, the second data network telephone interface operable to communicate PID data to and from the second data network telephone,

wherein the first PID communicates PID data to the first data network telephone, the first data network telephone communicates the PID data to the second data network telephone, and the second data network telephone communicates the PID data to the second PID..

2. The system of Claim 1 wherein:

at least a first and second user communicate on the voice-over-data channel and the PID data channel, each user identified by a user identifier that includes a unique sequence of alpha numeric elements

3. The system of Claim 2 wherein each data network telephone includes a device identifier that corresponds to the user identifier.

Bright House Networks - Ex. 1108, Page 706

4. The system of Claim 3 wherein the device identifiers include Internet Protocol (IP) addresses.

5. The system of Claim 3 wherein the user identifiers include Session Initiation Protocol (SIP) addresses.

6. The system of Claim 3 wherein the user identifiers include E.164 telephone numbers.

7. The system of Claim 1 further comprising:

a network telephony user database connected to the data network to store a user identifier and a telephone identifier corresponding to the user identifier for each of a plurality of users, wherein:

the user identifier includes a first sequence of alphanumeric elements that identify a corresponding user;

the telephone identifier includes a second sequence of alphanumeric elements that identifies a corresponding data network telephone; and

a network telephony connection server operable to receive a request message from the first data network telephone to initiate the voice over data channel and the PID data channel with the second data network telephone, and to send a response message in response to the request message.

8. The system of Claim 7, wherein the response and request messages are communicated by the network telephony connection server in accordance with the Session Initiation Protocol (SIP).

9. The system of Claim 7, wherein the response and request messages are communicated by the network telephony connection server in accordance with the H.323 Protocol.

10. The system of Claim 7 wherein the response and request messages are communicated by the network telephony connection server in accordance with the MGCP protocol.

11. The system of Claim 7 wherein the response and request messages are communicated by the network telephony connection server in accordance with the MEGACO protocol.

12. The system of Claim 7 wherein:

the request message includes a callee user identifier; and

wherein the network telephony connection server determines the telephone identifier for the callee user identifier and includes the telephone identifier in the response message.

13. The system of Claim 7 wherein:

the request message includes a callee user identifier; and

wherein the network telephony connection server determines the telephone identifier for the callee identified in the callee user identifier and sends the response message to the callee at the telephone identifier.

14. A method for transferring data between first and second personal information devices (PIDs) across a network, the method comprising the steps of:

providing a first communication link between the first PID and a first network communication device coupled to the network;

providing a second communication link between the second PID and a second network communication device coupled to the network;

establishing a connection through the network between the first and second network communication devices, where the connection includes at least one media stream for transfer of data between the first and second PIDs;

selecting a data object in the first PID;

transmitting the selected data object from the first PID to the first network communication device over the first communication link;

transferring the selected data object from the first network communication device over the media stream to the second network communication device; and

transmitting the selected data object from the second network communication device to the second PID over the second communication link.

15. The method of claim 14, the method further including the step of providing a location server accessible via the network and where the step of establishing a connection through the network further comprises:

sending a connection request from the first PID to the first network communication device, where the connection request includes a user identifier value corresponding to the second PID;

responsive to the connection request, sending a query including the user identifier value to the location server;

searching in the location server for an entry matching the user identifier value, where the matching entry includes a network address value corresponding to the second network communication device;

when the matching entry is found, sending a response message with the network address value corresponding to the second network communication device from the location server to the first network communication device; and

setting up the connection from the first network communication device to the second network communication device using the network address value corresponding to the second network communication device.

16. The method of claim 15, the method further including the steps of:

sending a registration request including the user identifier value from the second PID to the second network communication device via the second communication link;

responsive to the registration request, sending a registration update message including the user identifier value from the second network communication device to the location server via the network; and

Bright House Networks - Ex. 1108, Page 709

responsive to the registration update message, storing the matching entry having the user identifier value and the network address of the second network device in the location server.

17. The method of claim 16, where the location server further comprises a redirect server according to an Session Initiation Protocol (SIP).

18. The method of claim 14, the method further including the step of providing a location server accessible via the network and where the step of establishing a connection through the network further comprises:

sending a connection request from the first PID to the first network communication device, where the connection request includes a user identifier value corresponding to the second PID;

responsive to the connection request, sending a query including the user identifier value to the location server;

searching in the location server for an entry matching the user identifier value, where the matching entry includes a network address value corresponding to the second network communication device;

when the matching entry is found, sending a connection set-up message to the network address value corresponding to the second network communication device from the location server; and

setting up the connection between the first network communication device to the second network communication device responsive to the connection set-up message.

19. The method of claim 18, the method further including the steps of:

sending a registration request including the user identifier value from the second PID to the second network communication device via the second communication link;

responsive to the registration request, sending a registration update message including the user identifier value from the second network communication device to the location server via the network; and

responsive to the registration update message, storing the matching entry having the user identifier value and the network address of the second network device in the location server.

Bright House Networks - Ex. 1108, Page 710

20. The method of claim 19, where the location server further comprises a proxy server according to an Session Initiation Protocol (SIP).

21. The method of claim 19, including the step of defining the connection through the network between the first and second network devices using a Session Description Protocol (SDP).

22. The method of claim 14, where the first and second communication links are infrared links.

23. The method of claim 22, further including the steps of:

providing a predetermined protocol stack in the first and second PIDs; and

transferring the selected data object between peer layers of the predetermined protocol stack.

24. A data network telephone for transferring data between a personal information device (PID) and a network, the device comprising:

means for communicating with the PID;

means for communicating with the network;

means for setting up a connection to another network communication device responsive to receiving a connection request command from the PID through the PID communication means, where the connection request command includes a user identifier value corresponding to the another network communication device and where the connection is defined to have at least one media stream for transferring data from the PID to another PID; and

means for receiving a selected data object from the PID and transmitting the selected data object through the media stream of the connection to the another network communication device.

25. The network communication device of claim 24, where the means for setting up a connection to another network communication device includes:

means for sending a query for the user identifier value to a location server;

Bright House Networks - Ex. 1108, Page 711

means for receiving a response from the location server, where the response includes a network address for the another network communication device; and

means for connecting to the another network communication device using the network address from the response.

26. The network communication device of claim 25, where the means for connecting to the another network communication device further comprises Session Initiation Protocol (SIP) means for setting up the connection.

27. The network communication device of claim 26, where the means for connecting to the another network communication device includes means for defining the one media stream using a Session Description Protocol (SDP).

28. The network communication device of claim 25, further including means for receiving a registration request having another user identifier value from the PID and, responsive thereto, sending a registration update message, having the another user identifier value and another network address corresponding to the network communications device, to the location server.

29. The network communication device of claim 24 further including protocol means for communicating with a peer protocol means in the another PID.

30. The network communication device of claim 29, where the means for communicating with the PID further comprises an infrared communications link and where the protocol means further comprises an IrDA protocol stack.

31. The network communication device of claim 24, where the means for setting up a connection to another network communication device is further configured to set up another media stream for transferring data between the network communication device and the another network communication device simultaneous to the transfer of data between the PID and the another PID through the one media stream.

Bright House Networks - Ex. 1108, Page 712

32. A system for transferring data between personal information devices (PIDs) across a network, the system comprising:

a first personal information device (PID) having a communication port, where the first PID is configured to transmit a connection request having a user identifier value through the communication port and where the first PID is configured to transmit a selected data object via the communication port;

a first network communication device having a communication port and a network interface connection coupled to the network, where the first network device is configured to receive the connection request and establish a connection with a second network communication device corresponding to the user identifier value from the connection request, where the connection includes a first media stream for transferring data between PIDs, and where the first network communication device is further configured to receive the selected data object via the communication port of the first network device and send the selected data object through the first media stream.

33. The system of claim 32, where:

the first network communication device is further configured to transmit a query message onto the network that includes the user identification value from the connection request and the first network communication device is configured to receive a response message through the network that includes a network address corresponding to the user identification value and establish the connection using the network address; and

the system further includes a location server having a network connection coupled to the network and a data store for storing entries that relate user identifier values to network addresses, where the location server is configured to receive the query message from the first network communication device that includes the user identifier value and, responsive thereto, search the data store for an entry corresponding to the user identifier value and, when a corresponding entry is found, send a response over the network to the first network communication device that includes the network address value from the corresponding entry.

Bright House Networks - Ex. 1108, Page 713

34. The system of claim 33, where:

the user identifier value is a Session Initiation Protocol (SIP) Universal Resource Locator (URL);

the location server is a SIP location server operating in redirect mode; and

the first network device is configured to define the first media stream using a Session Definition Protocol (SDP).

35. The system of claim 32, where:

the first network communication device is further configured to transmit a query message onto the network that includes the user identification value from the connection request; and

the system further includes a location server having a network connection coupled to the network and a data store for storing entries that relate user identifier values to network addresses, where the location server is configured to receive the query message from the first network communication device that includes the user identifier value and, responsive thereto, search the data store for an entry corresponding to the user identifier value and, when a corresponding entry is found, establish the connection between the first network communication device and a network communication device corresponding to the network address value from the corresponding entry.

36. The system of claim 33, where:

the user identifier value is a Session Initiation Protocol (SIP) Universal Resource Locator (URL);

the location server is a SIP location server operating in proxy mode; and

the first network device is configured to define the first media stream using a Session Definition Protocol (SDP).

37. The system of claim 32, where the system includes a second PID coupled to the second network communications device, and where the first network communications device is further configured to establish a second media stream for transferring data between the first and second network communications

Bright House Networks - Ex. 1108, Page 714

devices while data is simultaneously transferring between the first and second PIDs via the first media stream.

Bright House Networks - Ex. 1108, Page 715

FIG. 1

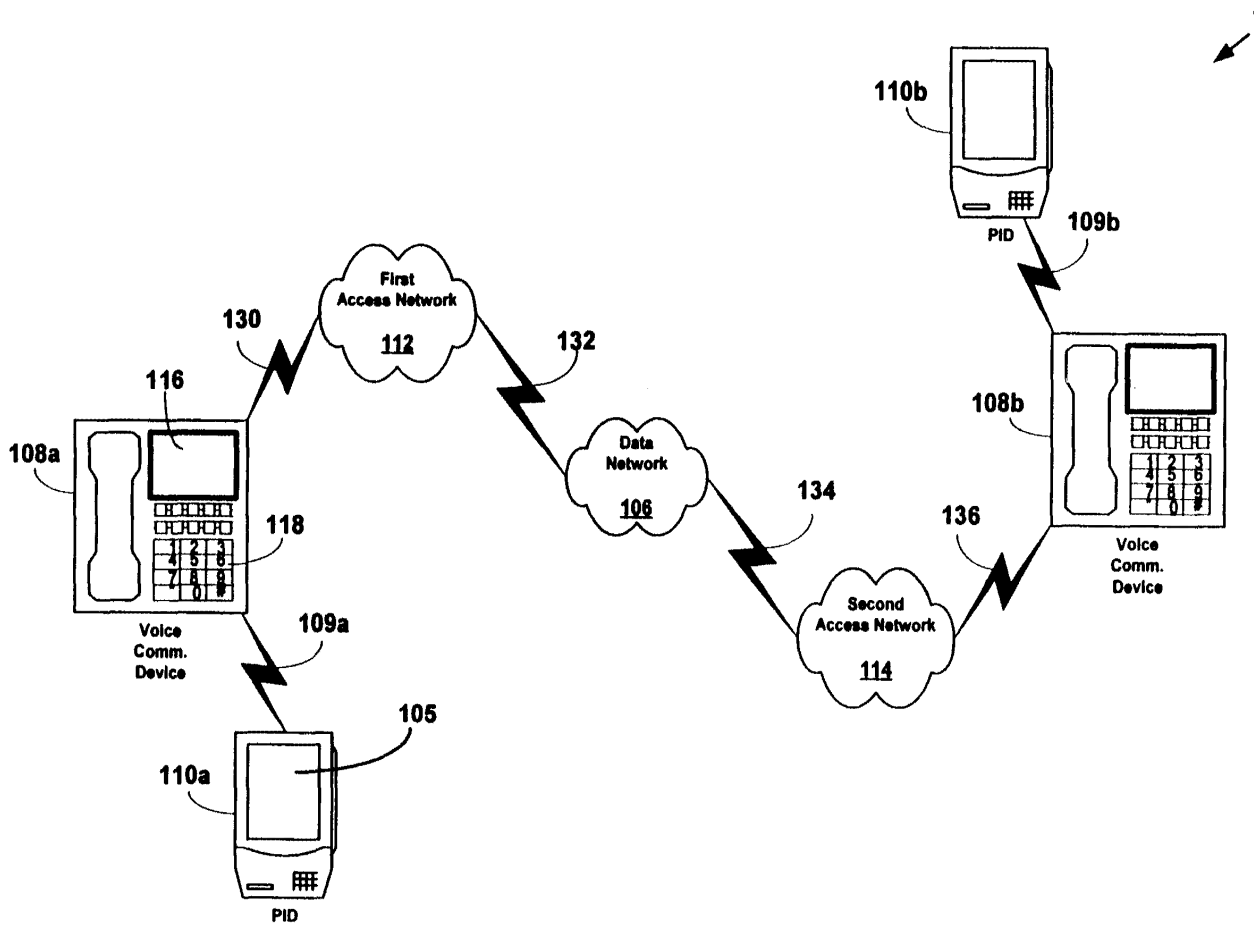
100
110b
PID
109b
First Access Network
112
130
132
116
108a
108b
Data Network
106
134
118
136
Voice Comm. Device
Second Access Network
114
109a
105
110a
PID

FIG. 2

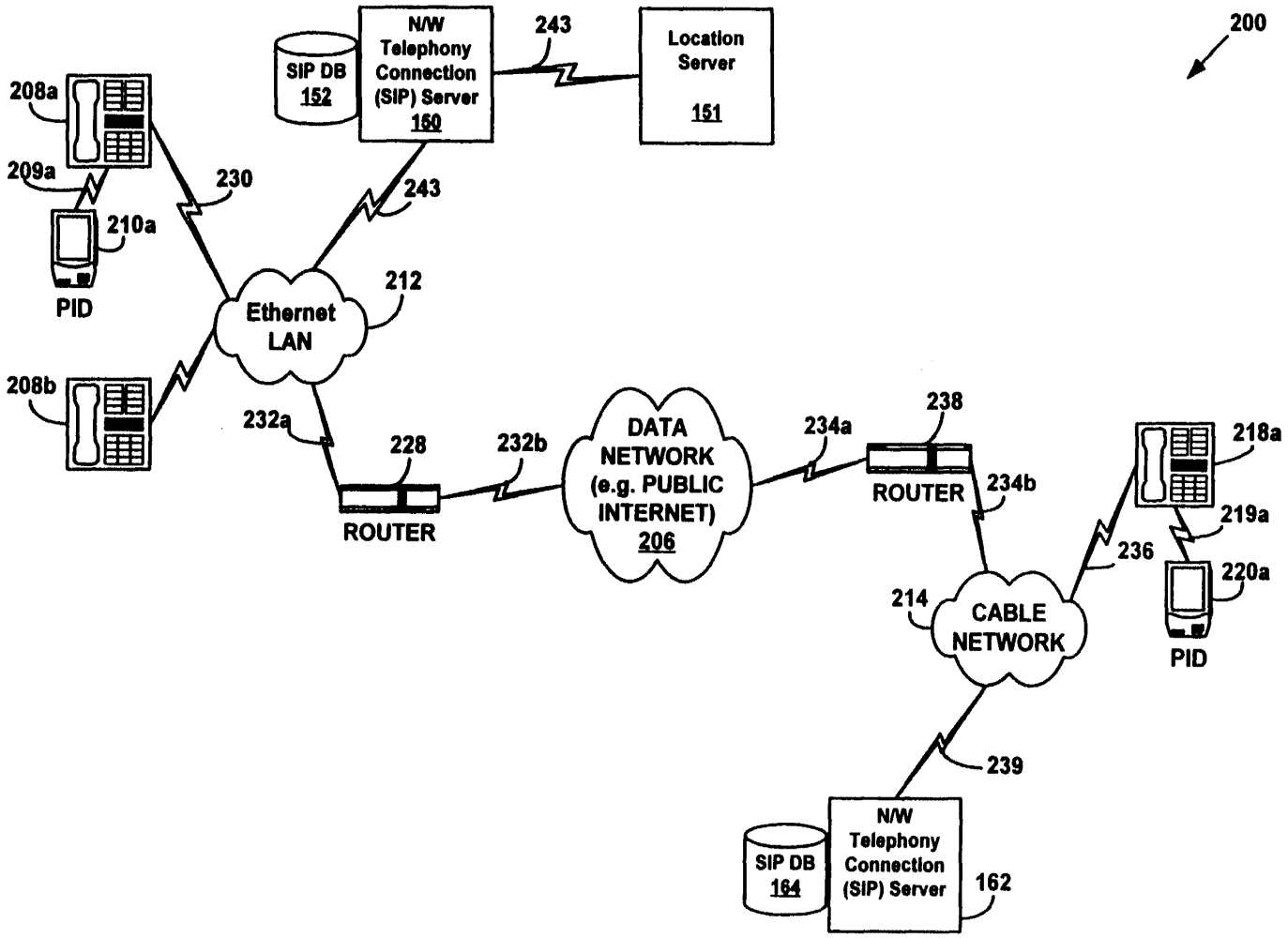
200
N/W Telephony Connection (SIP) Server 160
SIP DB 152
243
Location Server 151
208a
209a
210a
PID
230
243
212
Ethernet LAN
208b
232a
228
ROUTER
232b
DATA NETWORK (e.g. PUBLIC INTERNET) 206
234a
238
ROUTER
234b
218a
219a
220a
PID
236
214
CABLE NETWORK
239
SIP DB 164
N/W Telephony Connection (SIP) Server
162

FIG. 3

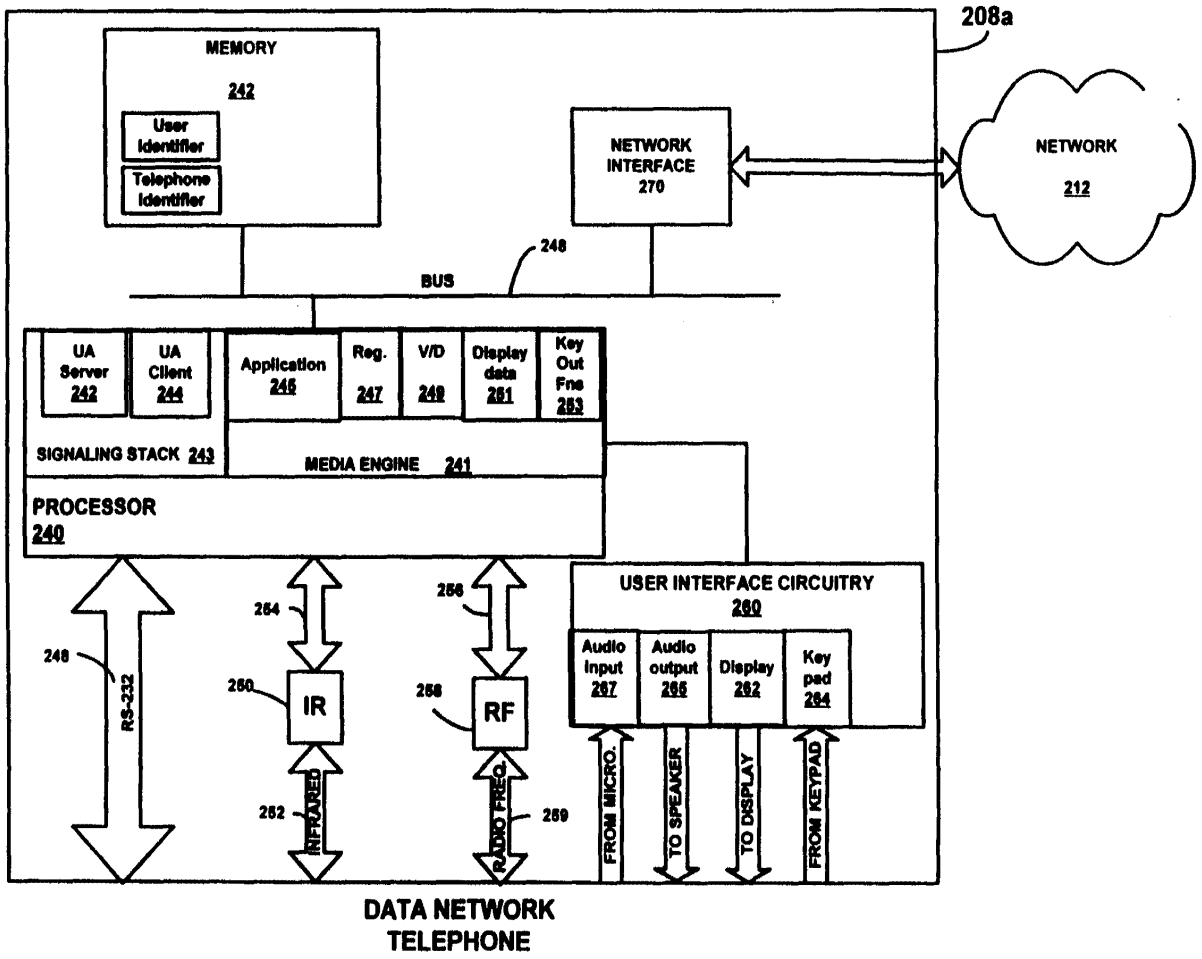
208a
MEMORY
242
User Identifier
Telephone Identifier
NETWORK INTERFACE 270
NETWORK 212
248
BUS
UA Server 242
UA Client 244
Application 245
Reg. 247
V/D 249
Display data 251
Key Out Fns 253
SIGNALING STACK 243
MEDIA ENGINE 241
PROCESSOR 240
USER INTERFACE CIRCUITRY 260
Audio input 267
Audio output 265
Display 262
Key pad 264
254
256
248
RS-232
260
IR
258
RF
INFRARED
252
RADIO FREQ.
259
FROM MICRO.
TO SPEAKER
TO DISPLAY
FROM KEYPAD
DATA NETWORK TELEPHONE

FIG. 4

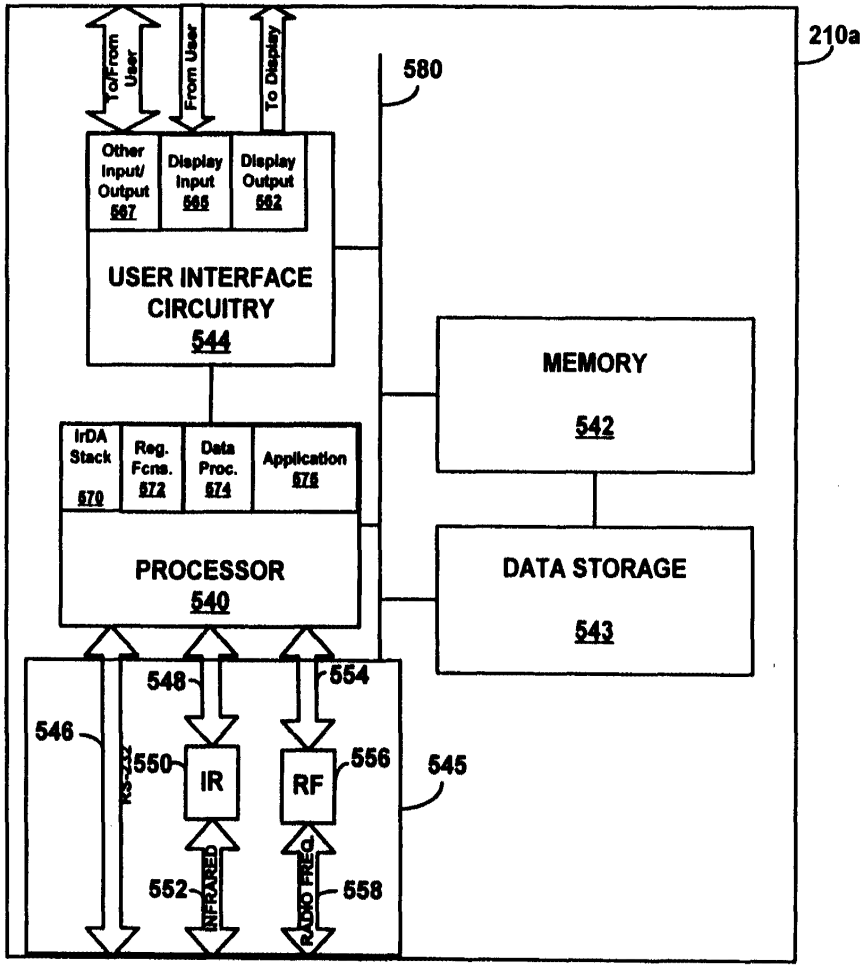
210a
580
To/From User
From User
To Display
Other Input/ Output 567
Display Input 566
Display Output 562
USER INTERFACE CIRCUITRY 544
MEMORY 542
IrDA Stack 570
Reg. Fcns. 572
Data Proc. 574
Application 576
PROCESSOR 540
DATA STORAGE 543
548
554
546
550
IR
RF
556
545
RS-232
552
INFRARED
RADIO FREQ.
558

PID

FIG. 5

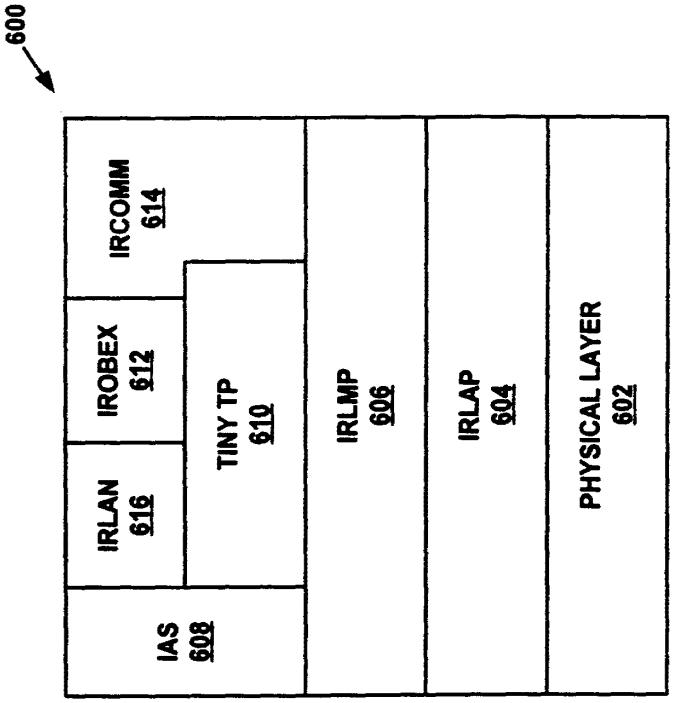
600
IRCOMM 614
IROBEX 612
IRLAN 616
TINY TP 610
IAS 608
IRLMP 606
IRLAP 604
PHYSICAL LAYER 602

FIG. 6

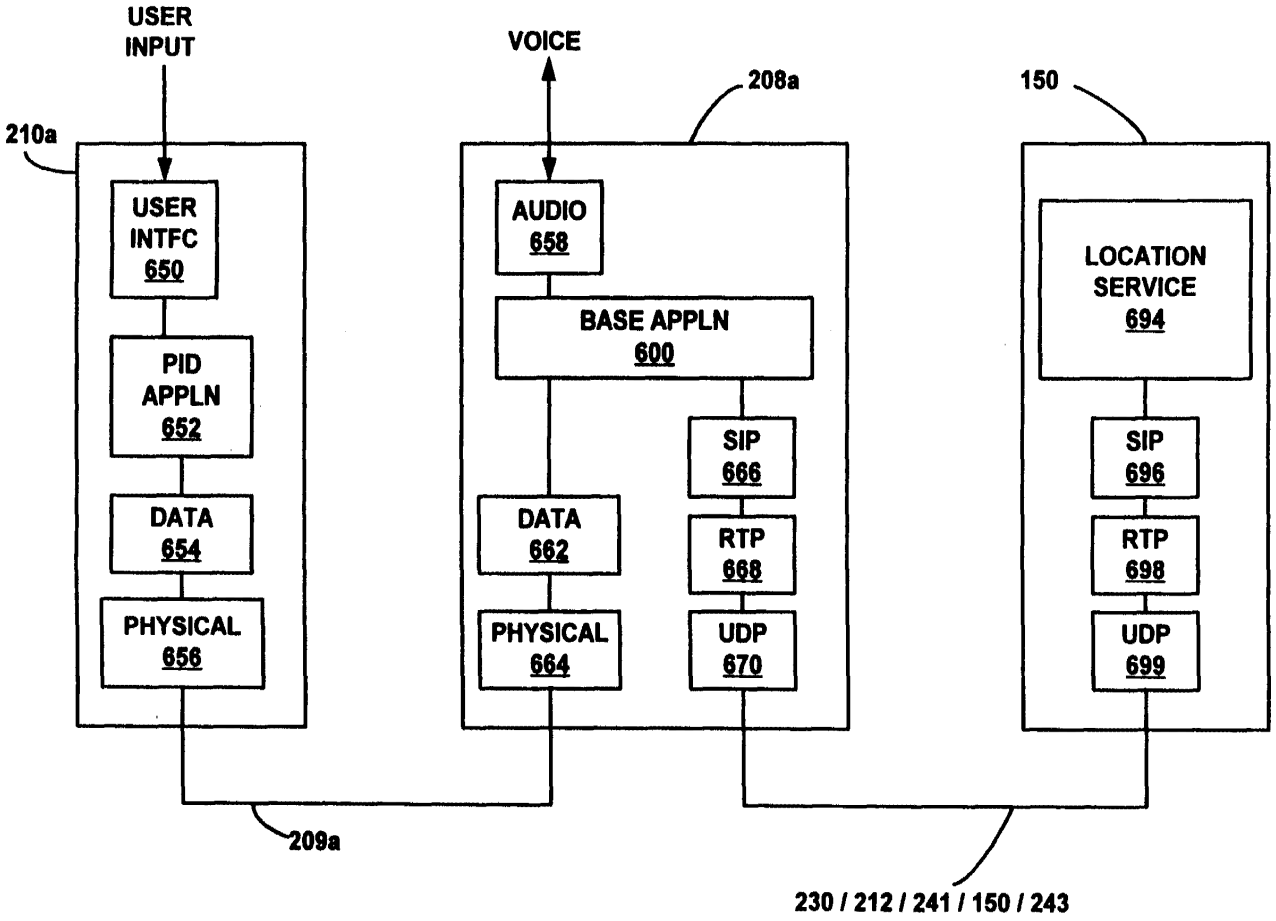
USER INPUT
VOICE
208a
150
210a
USER INTFC 650
PID APPLN 652
DATA 654
PHYSICAL 656
AUDIO 658
BASE APPLN 600
DATA 662
PHYSICAL 664
SIP 666
RTP 668
UDP 670
LOCATION SERVICE 694
SIP 696
RTP 698
UDP 699
209a
230 / 212 / 241 / 150 / 243

FIG. 7

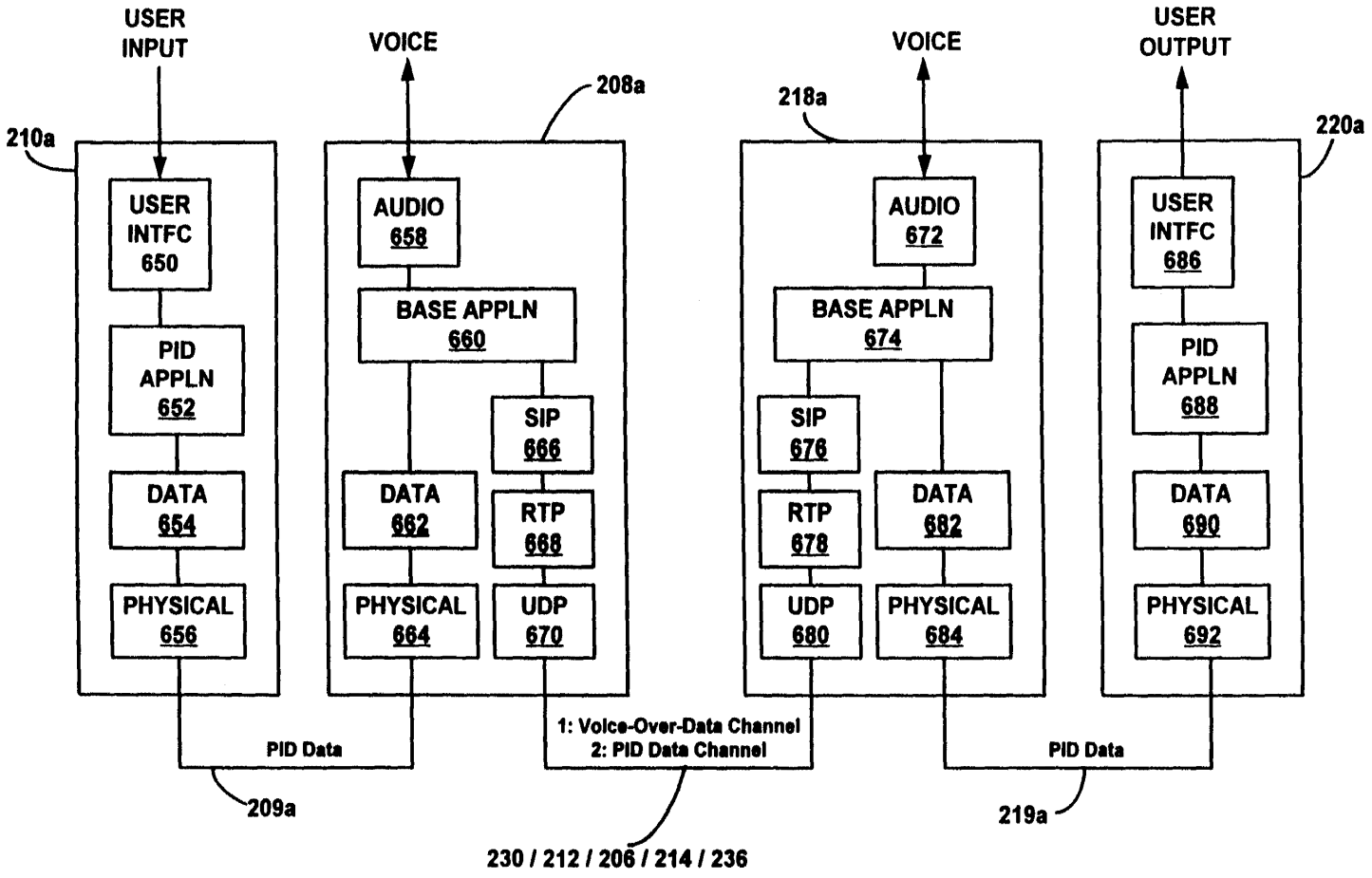
USER INPUT
VOICE
208a
VOICE
USER OUTPUT
218a
220a
210a
USER INTFC 650
PID APPLN 652
DATA 654
PHYSICAL 656
AUDIO 658
BASE APPLN 660
SIP 666
DATA 662
RTP 668
PHYSICAL 664
UDP 670
AUDIO 672
BASE APPLN 674
SIP 676
RTP 678
UDP 680
DATA 682
PHYSICAL 684
USER INTFC 686
PID APPLN 688
DATA 690
PHYSICAL 692
PID Data
1: Voice-Over-Data Channel
2: PID Data Channel
PID Data
209a
219a
230 / 212 / 206 / 214 / 236

FIG. 8

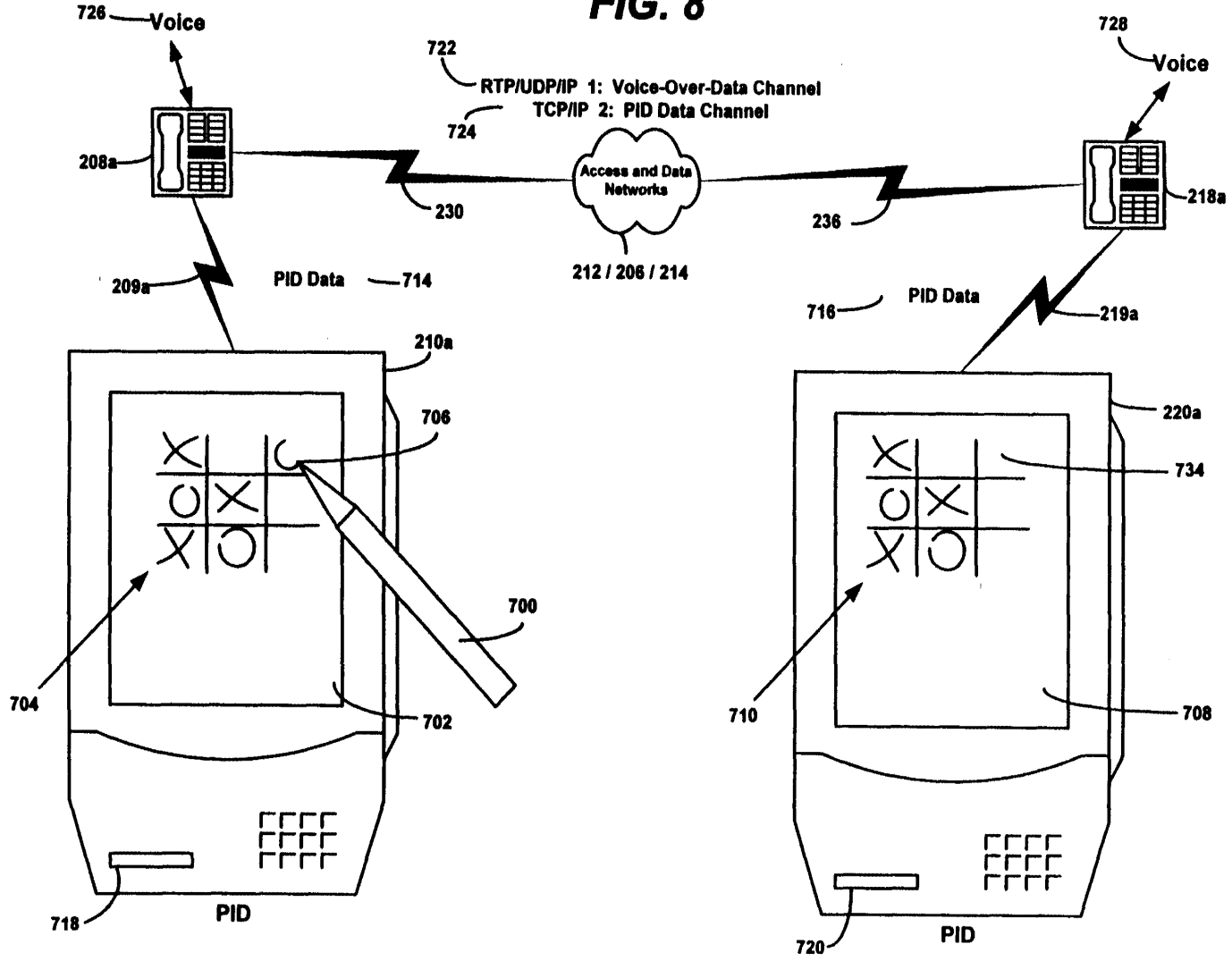
726
Voice
722
RTP/UDP/IP 1: Voice-Over-Data Channel
TCP/IP 2: PID Data Channel
724
728
Voice
208a
230
Access and Data Networks
236
218a
209a
PID Data
714
212 / 206 / 214
716
PID Data
219a
210a
706
220a
734
700
704
702
710
708
718
PID
720
PID

FIG. 9

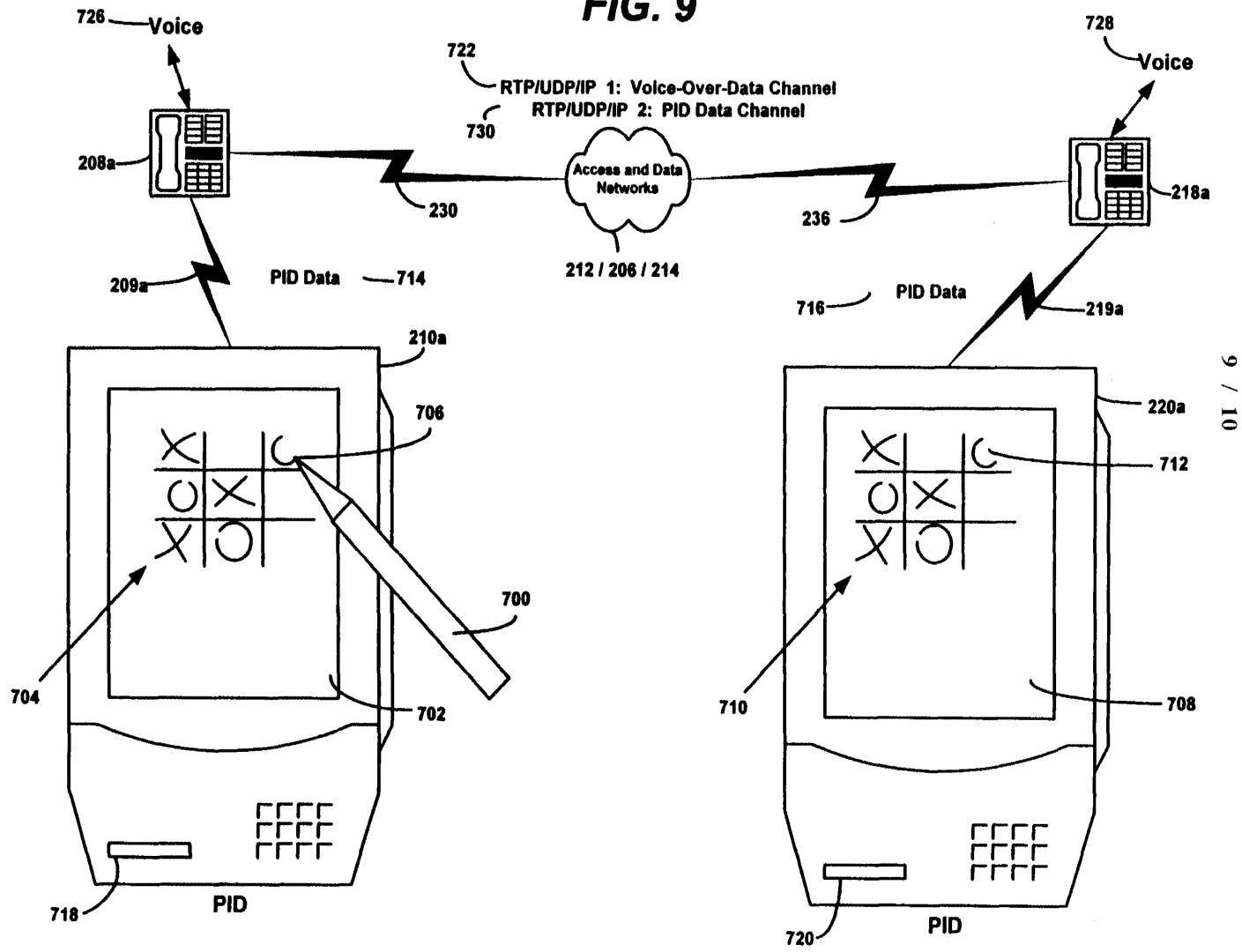
726
Voice
722
RTP/UDP/IP 1: Voice-Over-Data Channel
RTP/UDP/IP 2: PID Data Channel
730
728
Voice
208a
230
Access and Data Networks
236
218a
212 / 206 / 214
209a
PID Data
714
716
PID Data
219a
210a
220a
706
712
700
704
702
710
708
718
PID
720
PID

FIG. 10

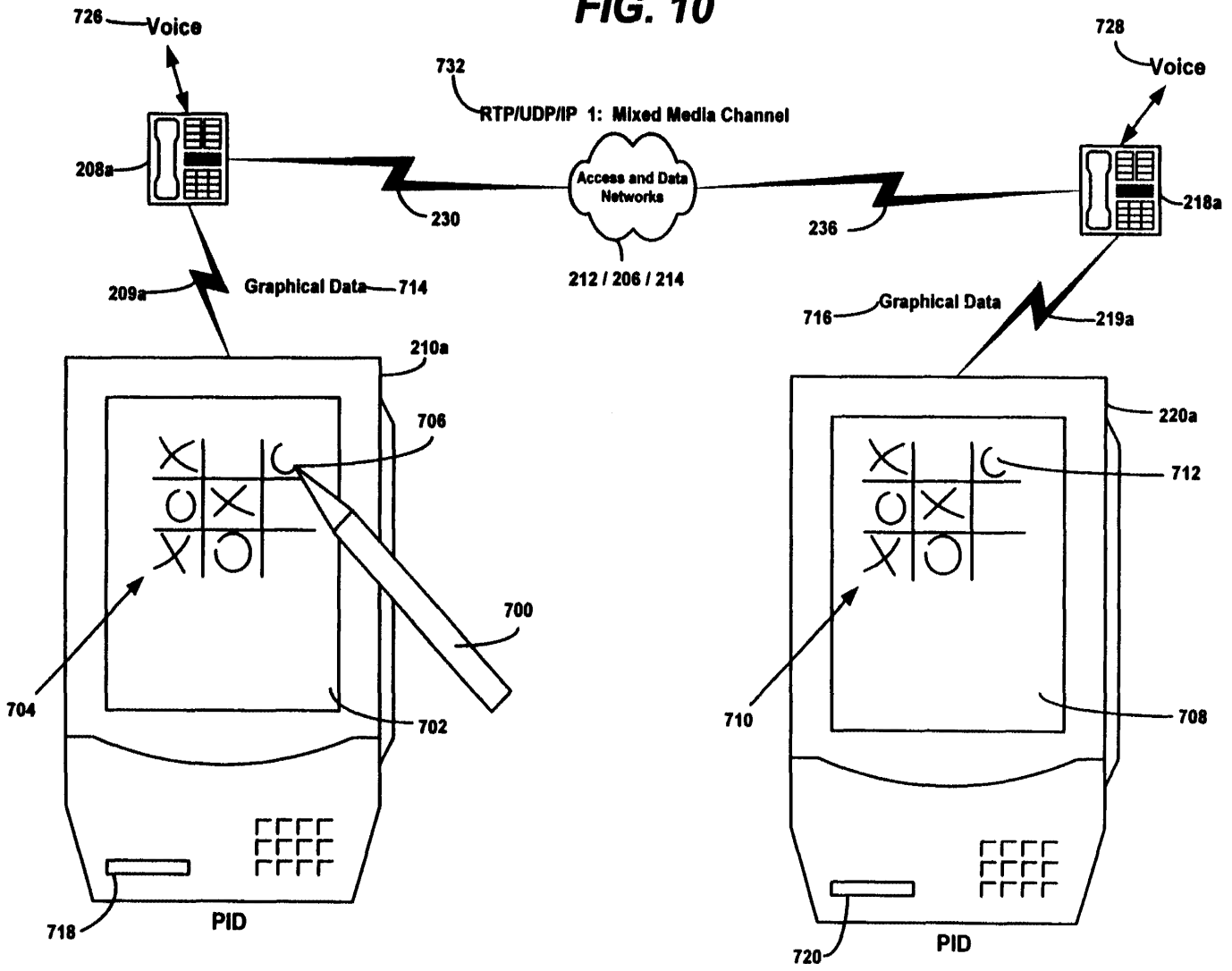
726
Voice
732
RTP/UDP/IP 1: Mixed Media Channel
728
Voice
208a
Access and Data Networks
218a
230
236
209a
Graphical Data
714
212 / 206 / 214
716
Graphical Data
219a
210a
220a
706
712
700
704
702
710
708
718
PID
720
PID

INTERNATIONAL SEARCH REPORT

I. ...national Application No
PCT/US 00/26650

A. CLASSIFICATION OF SUBJECT MATTER
IPC 7 H04M7/00

According to International Patent Classification (IPC) or to both national classification and IPC

B. FIELDS SEARCHED

Minimum documentation searched (classification system followed by classification symbols)
IPC 7 H04M H04L

Documentation searched other than minimum documentation to the extent that such documents are included in the fields searched

Electronic data base consulted during the international search (name of data base and, where practical, search terms used)
EPO-Internal, WPI Data, PAJ, INSPEC, IBM-TDB

C. DOCUMENTS CONSIDERED TO BE RELEVANT

Category °	Citation of document, with indication, where appropriate, of the relevant passages	Relevant to claim No.
X	DALGIC I ET AL: "TRUE NUMBER PORTABILITY AND ADVANCED CALL SCREENING IN A SIP-BASED IP TELEPHONY SYSTEM" IEEE COMMUNICATIONS MAGAZINE,IEEE SERVICE CENTER. PISCATAWAY, N.J,US, vol. 37, no. 7, July 1999 (1999-07), pages 96-101, XP000835310 ISSN: 0163-6804 the whole document	1-37
X	EP 0 881 848 A (CASIO COMPUTER CO LTD) 2 December 1998 (1998-12-02) column 4, line 40 -column 6, line 7	1,14,24, 32
A	EP 0 704 788 A (AT & T CORP) 3 April 1996 (1996-04-03)	

-/--

[X] Further documents are listed in the continuation of box C.

[X] Patent family members are listed in annex.

° Special categories of cited documents :

"A" document defining the general state of the art which is not considered to be of particular relevance

"E" earlier document but published on or after the international filing date

"L" document which may throw doubts on priority claim(s) or which is cited to establish the publication date of another citation or other special reason (as specified)

"O" document referring to an oral disclosure, use, exhibition or other means

"P" document published prior to the international filing date but later than the priority date claimed

"T" later document published after the international filing date or priority date and not in conflict with the application but cited to understand the principle or theory underlying the invention

"X" document of particular relevance; the claimed invention cannot be considered novel or cannot be considered to involve an inventive step when the document is taken alone

"Y" document of particular relevance; the claimed invention cannot be considered to involve an inventive step when the document is combined with one or more other such documents, such combination being obvious to a person skilled in the art.

"&" document member of the same patent family

Date of the actual completion of the international search	Date of mailing of the international search report
1 February 2001	19/02/2001

Name and mailing address of the ISA	Authorized officer
European Patent Office, P.B. 5818 Patentlaan 2 NL – 2280 HV Rijswijk Tel. (+31–70) 340–2040, Tx. 31 651 epo nl, Fax: (+31–70) 340–3016	Megalou, M

2

Form PCT/ISA/210 (second sheet) (July 1992)

Bright House Networks - Ex. 1108, Page 726

INTERNATIONAL SEARCH REPORT

I. ıational Application No
PCT/US 00/26650

C.(Continuation) DOCUMENTS CONSIDERED TO BE RELEVANT

Category °	Citation of document, with indication,where appropriate, of the relevant passages	Relevant to claim No.
A	US 5 894 595 A (FOLADARE MARK JEFFREY ET AL) 13 April 1999 (1999-04-13) abstract	1-37

2

Form PCT/ISA/210 (continuation of second sheet) (July 1992)

Bright House Networks - Ex. 1108, Page 727

INTERNATIONAL SEARCH REPORT

Information on patent family members

International Application No
PCT/US 00/26650

Patent document cited in search report	Publication date	Patent family member(s)	Publication date
EP 0881848 A	02-12-1998	JP 10336326 A	18-12-1998
		CN 1201346 A	09-12-1998
EP 0704788 A	03-04-1996	US 5625673 A	29-04-1997
		CA 2156208 A	23-03-1996
		JP 8129530 A	21-05-1996
US 5894595 A	13-04-1999	CN 1128477 A	07-08-1996
		EP 0696152 A	07-02-1996
		JP 8065749 A	08-03-1996

Form PCT/ISA/210 (patent family annex) (July 1992)

PCT WORLD INTELLECTUAL PROPERTY ORGANIZATION
International Bureau

INTERNATIONAL APPLICATION PUBLISHED UNDER THE PATENT COOPERATION TREATY (PCT)

(51) International Patent Classification :
H04M 11/00, 15/00, 3/42
H04M 7/00

A1

(11) International Publication Number: **WO 94/05111**

(43) International Publication Date: 3 March 1994 (03.03.94)

(21) International Application Number: PCT/US93/07835

(22) International Filing Date: 20 August 1993 (20.08.93)

(30) Priority data:

934,240	25 August 1992 (25.08.92)	US
972,501	6 November 1992 (06.11.92)	US
972,502	6 November 1992 (06.11.92)	US
972,503	6 November 1992 (06.11.92)	US
972,504	6 November 1992 (06.11.92)	US
972,813	6 November 1992 (06.11.92)	US
972,817	6 November 1992 (06.11.92)	US

(71) Applicant: BELL COMMUNICATIONS RESEARCH, INC. [US/US]; 290 West Mount Pleasant Avenue, Livingston, NJ 07039-2729 (US).

(72) Inventors: MAN, Susan, Kuo-Kung ; 5 Old Farm Road, Holmdel, NJ 07733 (US). CEBULKA, Kathleen, Dickens ; 75 Evans Avenue, Piscataway, NJ 08854 (US). FISHER, Gregory, Michael ; 2704 North Oak Boulevard, North Brunswick, NJ 08902 (US). LANCASTER, Jill, Ellen ; 1029 Old York Road, Hightstown, NJ 08520 (US). NAZIF, Zaher, Amin ; 7 Jane Lane, High Bridge, NJ 08829 (US). VINCIGUERRA, Lori, Jean ; 75 Evans Avenue, Piscataway, NJ 08854 (US). SHASTRY, Subramanya, Kolpe ; 66 Green Meadow Boulevard, Middletown, NJ 07748 (US). CHU, Francis, Yiu-keung ; 123 Forest Glen Drive, Highland Park, NJ 08904 (US). WANG, Lei-Lei, Chu ; 37 Brians Circle, Princeton Junction, NJ 08550 (US).

(74) Agents: WINTER, Richard, C.; PCT International, Inc., Post Office Box 573, New Vernon, NJ 07976 (US) et al.

(81) Designated States: CA, JP, European patent (AT, BE, CH, DE, DK, ES, FR, GB, GR, IE, IT, LU, MC, NL, PT, SE).

Published
With international search report.
Before the expiration of the time limit for amending the claims and to be republished in the event of the receipt of amendments.

(54) Title: AN APPARATUS AND METHOD FOR CREATING, TESTING, VALIDATING, AND PROVISIONING TELECOMMUNICATION SERVICES

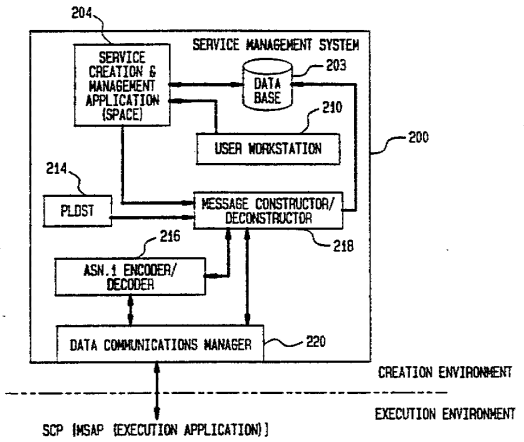

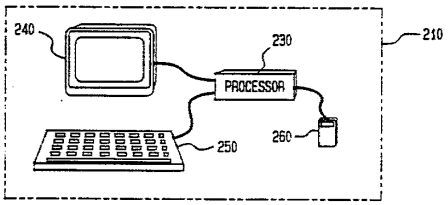

(57) Abstract

In a method of creating a general service specification for a call processing record in a telephone network, a processor [230] in the record creation system [200] prompts the operator to identify at least one optional node [128c], at least one required node [126c], and at least one restricted node from a node set presented to the operator. Also, in a method of creating a template for the creation of call processing services, a processor [230] in the record creation system [200] displays a selected call processing record [925] to the operator. The operator then identifies which nodes in the call processing record will be made customizable. Data tables [1220] can be created and accessed by one or more call processing records for executing telephone services. Also, call processing sample nodes [734] and measurement nodes [733] can be created and used for call processing.

FOR THE PURPOSES OF INFORMATION ONLY

Codes used to identify States party to the PCT on the front pages of pamphlets publishing international applications under the PCT.

AT	Austria	**FR**	France	**MR**	Mauritania
AU	Australia	**GA**	Gabon	**MW**	Malawi
BB	Barbados	**GB**	United Kingdom	**NE**	Niger
BE	Belgium	**GN**	Guinea	**NL**	Netherlands
BF	Burkina Faso	**GR**	Greece	**NO**	Norway
BG	Bulgaria	**HU**	Hungary	**NZ**	New Zealand
BJ	Benin	**IE**	Ireland	**PL**	Poland
BR	Brazil	**IT**	Italy	**PT**	Portugal
BY	Belarus	**JP**	Japan	**RO**	Romania
CA	Canada	**KP**	Democratic People's Republic of Korea	**RU**	Russian Federation
CF	Central African Republic			**SD**	Sudan
CG	Congo	**KR**	Republic of Korea	**SE**	Sweden
CH	Switzerland	**KZ**	Kazakhstan	**SI**	Slovenia
CI	Côte d'Ivoire	**LI**	Liechtenstein	**SK**	Slovak Republic
CM	Cameroon	**LK**	Sri Lanka	**SN**	Senegal
CN	China	**LU**	Luxembourg	**TD**	Chad
CS	Czechoslovakia	**LV**	Latvia	**TG**	Togo
CZ	Czech Republic	**MC**	Monaco	**UA**	Ukraine
DE	Germany	**MG**	Madagascar	**US**	United States of America
DK	Denmark	**ML**	Mali	**UZ**	Uzbekistan
ES	Spain	**MN**	Mongolia	**VN**	Viet Nam
FI	Finland				

AN APPARATUS AND METHOD FOR CREATING, TESTING, VALIDATING, AND PROVISIONING TELECOMMUNICATION SERVICES

Background of the Invention

The present invention relates generally to the field of customized services, and more specifically to the problems of creating, testing, validating, and provisioning customized telecommunication services.

Existing telephone systems can include a service creation environment for creating customized telephone services and a service execution environment for executing the telephone services. The service creation environment can include a graphical user interface, which permits a user to build and/or change a displayed graphical representation of a desired service using "nodes," "decision boxes," and "branches." Each node represents a high level instruction for the execution of the service. The displayed graphical representation of the service is translated to a binary representation and stored as a call processing record (CPR). CPRs are transmitted from a creation environment to an execution environment where they are executed during call processing operations to send call processing instructions to inquiring switches.

These systems and methods for creating and executing customized telephone services can be implemented in the Advanced Intelligent Telephone Network (AIN).

Fig. 1 illustrates an exemplary AIN comprising System Service Points (SSPs) 30, 35, 40, and 45, Signal Transfer Points (STPs) 48 and 50, Service Control Points (SCPs) 10 and 20, and Service Management Systems (SMS) 60 (only one shown). SSPs are central office switching systems which receive telephone calls from telephones 12. Each SSP recognizes a variety of "triggers" within customer telephone call signals and generates queries to SCPs based on the triggers. The SSPs then process customer calls in response to commands received from the SCPs.

The SCPs communicate with the SSPs over a common-channel-signalling (CCS) network 67 that includes STPs 48 and

50. The CCS network 67 employs communication channels separate from channels used to transport customer voice signals and includes a packet-switching system. The CCS network 67 switches data in packets instead of allocating circuits for the duration of a call. The STPs 48 and 50 provide the packet-switching functions.

Each SCP is fault tolerant because each SCP includes processors connected through dual local-area networks (not shown). If one processor of an SCP fails, another processor of the SCP can ensure that the SCP continues to function. Further, SCPs are configured as a mutually mated pair in different locations. If an SCP, such as SCP 10, is disabled, its mate, SCP 20, can ensure that telephone service continues without interruption.

Associated with each SCP or each pair of SCPs is an SMS 60. An SMS 60 provides a support interface through which customer data and service logic can be added or managed.

Techniques also exist for testing and validating CPRs that have been created at a creation environment. Testing of a CPR for example can provide a visual indication on a displayed graphical representation (graph) of the CPR of the execution path taken through the CPR during a call processing operation. The visual indication may be a red line trace of the paths connecting the nodes of a displayed graph. Validating a CPR involves detecting logical infractions in the processing routine of the CPR and identifying these infractions to an operator based on a set of rules and a knowledge base understood by an expert system.

Some service providers may wish to maintain a high degree of control over services that they make available. For example, they may wish to restrict the use of certain nodes to their customers or to offer only certain types of services to certain types of customers.

Moreover, an operating company may offer a substantially similar service to numerous customers. It is expensive and inefficient to build substantially the same graph to provide

each customer with substantially the same service. Hence, it would be beneficial to an operating company to be able to provide a specification for a service from which numerous similar graphs could be generated, but with enough flexibility to cater to each customer's individual needs. For example, an operating company may determine that many of its customers are interested in a service that permits the customer to specify the carrier for long distance calls associated with the customer's "800" number. This service would be similar for each customer and would require certain nodes (such as carrier nodes) in each customer's CPR. However, larger businesses may want additional features from such a service. For example, they may want to provide for different carriers during different times of the day. It would therefore be beneficial to the operating company to be able to offer a basic 800 service and an enhanced 800 service wherein each service is partially predefined, yet flexible enough to permit some customization by the individual customers.

Accordingly, it is desirable to provide a general service specification that allows a service creator to define a service, but permits a user enough flexibility to customize the service to some degree.

It is also desirable to permit a service creator to define a service specification in which certain predetermined nodes are mandatory, certain predetermined nodes are optional, and certain predetermined nodes are restricted.

In addition, many customers may want the same service, or they may want services with only minor differences. For example, an operating company may determine that most of its customers desire a service that permits them to specify the carrier for their long distance calls. This service would be similar for each customer, and each customer's graph for this service would be almost identical. It may be impractical or costly for the service creator to generate essentially the same CPR numerous times, once for each customer, particularly when only slight differences need exist in the CPRs. In the

example of the long distance carrier, it would be beneficial to the operating company to be able to create a long distance carrier service only once and make only minor changes to it to accommodate each customer. In addition, this allows for consistent service deployment within an operating company.

Accordingly, it is desirable to provide for the creation of a service template that specifies most of a desired service, but permits some tailoring to meet the needs of individual customers.

It is also desirable to permit an operator to create a service CPR template that is readily adaptable for any number of customers.

Some existing service creation systems suffer from a disadvantage because they do not efficiently scale up to provide services to a large number of customers.

For example, a company with several employees may wish to prevent long distance calls from certain phone extensions in its building. To offer such a service to the company, one existing service creation system would require a CPR specifying a branch node for each phone extension of the company for which it sought to permit such long distance calls, and provide different routing requirements therefor. It would take an extraordinary amount of time to create such a CPR and its different branch conditions. Moreover, the service logic corresponding to this CPR would be very complicated and make the overall service implementation very inefficient.

Accordingly, it is desirable to provide an efficient and effective means to create services on a large scale.

It is further desirable to provide CPR nodes which permit the efficient and effective accessing and updating of data tables during call processing.

In general, CPRs, after being created, are transmitted to an execution environment where a service provider has little control over the CPR. However, for many services, a service provider may desire to monitor the service or to

obtain useful information concerning the execution of the service. Accordingly, it is desirable to permit a service provider to administer the execution of a service.

In the system referred to, services can be created using only fixed or predefined nodes. Although these nodes provide a great deal of service creation flexibility, because only certain nodes are available, service creation flexibility is limited.

It is desirable to provide for the design, layout, and instantiation of user-defined nodes that are indistinguishable from other predefined nodes from the perspective of the service creation and execution environments.

The CPRs discussed above comprise a "key" and a plurality of nodes, decision boxes, and branches. The "key" includes a telephone number and a suffix. The suffix .e04 means that the CPR controls calls made from the corresponding telephone number, and the .e05 suffix means that the CPR controls calls made to the corresponding telephone number. Hence, to provide separate services for calls made to or from a subscriber's telephone number, existing service creation systems require separate CPRs.

Requiring multiple CPRs per customer in a system having many customers strains the storage and execution environments with tremendous amounts of service logic. Moreover, it complicates and hinders efficient service execution and management.

Accordingly, it is desirable to provide a CPR structure that permits efficient use of CPRs on a large scale in an execution environment.

It is also desirable to provide a CPR structure that permits quick and efficient storage, access, management, and execution of CPRs.

Additional desires of the invention will be set forth in the description which follows, and in part will be apparent from the description, or may be learned by practice of the

invention. The advantages of the invention may be realized and obtained by means of the instrumentalities and combinations particularly pointed out in the appended claims.

Disclosure of the Invention

To achieve the foregoing desires and objects, and in accordance with the purposes of the invention as embodied and broadly described herein, the present invention provides a method of creating a general service specification for a call processing record comprising logically related nodes and branches, the method comprises the steps, executed by a processor, of: prompting an operator to identify at least one optional node which may appear in a call processing record associated with the general service specification; receiving from an operator, an identification of at least one optional node which may appear in a call processing record associated with the general service specification; prompting an operator to identify at least one required node which must appear in a call processing record associated with the general service specification; receiving from an operator, an identification of at least one required node which must appear in a call processing record associated with the general service specification; and enabling the optional and required nodes as a general service specification.

To achieve the foregoing desires and objects, and in accordance with the purposes of the invention as embodied and broadly described herein, the present invention also provides a method of creating a template for the creation of call processing services, each call processing service being represented by a call processing record comprising logically related call processing nodes and branches, the method comprises the steps, executed by a processor, of: displaying a selected call processing record to an operator; receiving from an operator a selection of a node in the call processing record to be made customizable, a customizable node being a node for which subsequent template users can specify

predetermined expressions; displaying all expressions of the selected node; prompting the operator to specify which of the selected node expressions will be customizable; designating the specified node expressions as customizable; and enabling the selected call processing record and the designation of customizable node expressions for the selected node as a service template.

To achieve the foregoing desires and objects, and in accordance with the purposes of the invention as embodied and broadly described herein, the present invention also provides in a telecommunication service creation environment providing for call processing records and value tables, the value tables comprising one or more columns and one or more rows of values, a method of creating a call processing procedure to determine whether a particular value exists in a particular value table, the method comprises the steps, executed by a data processor, of: prompting an operator to name a value table to be searched; receiving from the operator a name of the value table to be searched; prompting an operator to identify one or more columns in the value table to be searched; receiving from the operator an identification of one or more values in the value table to be searched; prompting an operator to specify a value to be searched for in the one or more columns to be searched; receiving from the operator a value to be searched for in the one or more columns to be searched; prompting an operator to specify comparison criteria for the value specified and values in the column to be searched; receiving from the operator a comparison criteria for the value specified and values in the column to be searched; and instantiating the table name, one or more columns, value to be searched for, and comparison criteria as part of the call processing procedure.

To achieve the foregoing desires and objects, and in accordance with the purposes of the invention as embodied and broadly described herein, the present invention also provides a method of providing a call processing sample node to determine an amount of call processing activity, the method

comprises the steps, executed by a processor, of: prompting an operator to input values for parameters to be used with the sample node; receiving from an operator a sampling rate identifying a percentage of calls to be sampled; receiving from an operator a sample name for data collected; receiving from an operator a sampling type defining whether a sample activity should be determined based on attempted or completed call processing operations; receiving from an operator a collection type defining whether results of a sample activity should be collected presently or deferred; receiving from an operator an identification of call variables to be sampled; and instantiating the sampling rate, sample name, sampling type, collection type, and call variables as a call processing sample node.

The present invention also provides a method of providing a call processing measurement node to count call processing events, the method comprises the steps, executed by a processor, of: prompting an operator to input values for parameters to be used with the measurement node; receiving from an operator a call variable naming a measurement vector; receiving from an operator a component name identifying a component in the measurement vector; receiving from an operator information specifying whether the component should be incremented or decremented; and instantiating the call variable name, component name, and increment or decrement information as a measurement node.

To achieve the foregoing desires and objects, and in accordance with the purposes of the invention as embodied and broadly described herein, the present invention also provides a method of creating a user-defined call processing node for a call processing record, the call processing record comprising logically related nodes and branches, the method comprising the steps, executed by a processor, of: receiving an instruction from an operator to construct a user-defined call processing node; presenting to the customer a screen in which to construct the user-defined call processing node; constructing an underlying representation of call processing

procedures selected by the operator; and enabling the underlying representation of call processing procedures as a single node for use in creating call processing records.

Finally, to achieve the foregoing desires and objects, and in accordance with the purposes of the invention as embodied and broadly described herein, the present invention provides a call processing record for execution in a telephone service execution environment, comprising: a record header associating the call processing record with a corresponding telephone service subscriber; at least one call processing logic section including call processing procedures executable by a processor in the telephone service execution environment; at least one first data section, each of the at least one first data sections being associated with one of the at least one call processing logic sections and storing data executable only by the call processing procedures included in the associated one of the at least one call processing sections; and at least one entry point, each of the at least one entry points being associated with one of the at least one call processing logic sections and an associated one of the at least one first data sections, the at least one entry point identifying the associated one of the at least one call processing sections.

Brief Description of the Drawings

The accompanying drawings, which are incorporated in and constitute a part of the specification, illustrate presently preferred implementations of this invention and, together with the general description given above and the detailed description of the preferred implementations given below, serve to explain the principles of the invention.

In the drawings:

Fig. 1 is a block diagram of the Advanced Intelligent Telephone Network (AIN);

Fig. 2A is a block diagram illustrating a service creation environment in accordance with one embodiment of the present invention;

Fig. 2B is a block diagram illustrating a workstation within the service creation environment shown in Fig 2A in accordance with one embodiment of the present invention;

Fig. 3 is a procedure diagram for a service creation environment in accordance with one embodiment of the present invention;

Fig. 4A is a schematic representation of software modules corresponding to display and editing procedures of the software in accordance with one embodiment of the present invention;

Fig. 4B is a schematic representation of software modules corresponding to data structure procedures of the software in accordance with one embodiment of the present invention;

Fig. 4C is a schematic representation of software modules corresponding to binary and other related procedures of the software in accordance with one embodiment of the present invention;

Fig 5 illustrates the structure of a CPR in accordance with one embodiment of the present invention;

Fig. 6A illustrates a Table in accordance with one embodiment of the present invention;

Fig. 6B illustrates a Table Specification in accordance with one embodiment of the present invention;

Fig. 6C illustrates a Table Record in accordance with one embodiment of the present invention;

Fig. 7 illustrates a system screen in accordance with one embodiment of the present invention;

Fig. 8 illustrates a New Record Information Box in accordance with one embodiment of the present invention;

Fig. 9 illustrates a CPR Editor screen in accordance with one embodiment of the present invention;

Fig. 10 illustrates a GSS Editor screen in accordance with one embodiment of the present invention;

Fig. 11 is a flow diagram illustrating a GSS creation operation in accordance with one embodiment of the present invention;

Fig. 12 illustrates a GSS Editor screen showing an exemplary GSS in accordance with one embodiment of the present invention;

Fig. 13A illustrates an example of a graph in accordance with one embodiment of the present invention;

Fig. 13B illustrates another example of a graph in accordance with one embodiment of the present invention;

Fig. 14 is a flow diagram illustrating an operation for validating a graph against an associated GSS in accordance with one embodiment of the present invention;

Fig. 15 illustrates a NODE Editor screen in accordance with one embodiment of the present invention;

Fig. 16 illustrates an example of a graph using Measurement and Sampling nodes in accordance with one embodiment of the present invention;

Fig. 17 illustrates an example of a graph using External System Interaction nodes in accordance with one embodiment of the present invention;

Fig. 18 illustrates a Custom Node Editor screen in accordance with one embodiment of the present invention;

Fig. 19A illustrates Parameter Editor screen in accordance with one embodiment of the present invention;

Fig. 19B illustrates a Selection List Editor screen in accordance with one embodiment of the present invention;

Fig. 20 illustrates a Custom Node Preview screen in accordance with one embodiment of the present invention;

Fig. 21 illustrates a Custom Node Layout Screen in accordance with one embodiment of the present invention;

Fig. 22 illustrates a Custom Node Category screen in accordance with one embodiment of the present invention;

Fig. 23 illustrates an example of a graph using an Intable node in accordance with one embodiment of the present invention;

Fig. 24 illustrates a table in accordance with one embodiment of the present invention;

Fig. 25 is an Intable Editor screen in accordance with one embodiment of the present invention;

Fig. 26 is a flow diagram illustrating an operation of an Intable node in accordance with one embodiment of the present invention;

Fig. 27 is a Table Node Editor screen in accordance with one embodiment of the present invention;

Fig. 28 is a flow diagram illustrating an operation of a Table node in accordance with one embodiment of the present invention;

Fig. 29A illustrates a Template Editor screen in accordance with one embodiment of the present invention;

Fig. 29B illustrates a Carrier Node Editor screen for templates in accordance with one embodiment of the present invention; and

Fig. 29C illustrates a Template Preview Editor screen in accordance with one embodiment of the present invention;

Fig. 29D illustrates a Template Layout Editor screen in accordance with one embodiment of the present invention; and

Fig. 30 illustrates a Template Find Editor screen in accordance with one embodiment of the present invention.

Best Mode for Carrying Out the Invention

Reference will now be made in detail to the construction and operation of the preferred implementations of the present invention which are illustrated in the accompanying drawings. In the drawings, like elements and operations are designated by like reference numbers. The following description of the preferred implementations is exemplary, and does not limit the invention to these specific implementations

A. System Configuration

In a preferred embodiment of the present invention, a service is created in the AIN. In particular, a service is created by a user at a workstation associated with the SMS 200.

Fig. 2A is a block diagram of a preferred embodiment of an SMS 200 in accordance with the present invention. The SMS 200 includes a service creation and management application 204 which preferably comprises the SPACE® application version 2.0. SPACE is a proprietary software application owned by Bellcore, the assignee of this application.

In addition to the service creation and management application 204, SMS 200 includes a user workstation 210. Preferably, user workstation 210 (also shown in Fig. 2B) includes an IBM RS-600 (Model 320) as well as related equipment, for example, processor 230, keyboard 250, mouse 260, and graphical display 240 which preferably runs AIX windows (IBM), version 3.2 or X-windows, version 11, release 4 or later .

The SMS 200 also includes database 203, Programming Language Data Structure Translator (PLDST) 214, ASN.1 Encoder/Decoder 216, Message Constructor/Deconstructor (Message C/D) 218, and Data Communications Manager 220. These elements, their relationships, and their relationship to the execution environment in an SCP 10, 20 are described in the incorporated interface application.

The service creation portion of the SPACE application is dedicated to the creation of CPRs and Tables (described below). CPRs are created using the SPACE application by generating a high level, displayed representation (graph) of the desired service on the display 240 of user workstation 210. The displayed graph of a CPR is extremely useful in that it permits an operator to create and understand the telephone service being created and to test and validate the service logic. However, the graph cannot be interpreted

efficiently directly by the execution environment. Accordingly, the CPR graph is translated into a binary representation which can be used to process calls in the execution environment.

B. Software Configuration

In a preferred embodiment, before a CPR graph is translated into a binary representation, it is first translated into an internal representation comprising data structures and pointers. These translations and representations are shown in Fig. 3, wherein display procedures 300 generate the display representation 302 of the CPR, data structure procedures 304 generate the internal representation 306, and binary procedures 308 generate the binary representation 310 of the CPR, which is stored in database 203.

Preferably, the display procedures 300 are designed according to an object-oriented design methodology using the C++ language. Accordingly, the data structure procedures 304 are also object-oriented. The data structure procedures 304 are less machine dependent than the display procedures 300 because the data structure procedures 304 can be used with many different display forms and many different types of hardware. The binary representation 310 of the CPR is the most machine independent.

Each of the foregoing display, data structure, and binary data procedures is established in the SPACE application by one or more software "modules." Modular programming allows individual procedures or functions to be distinctly represented during design, and individually exercised during execution. A defined module may interactively "call" or invoke another module.

1. Display and Editing Modules

In a preferred embodiment, the display procedures 300 of Fig. 3 include display and editing modules. The display and editing modules display various graphical objects on the display 240 of workstation 210 and allow manipulation of the graphical objects by the user. The display and editing modules, as shown in Fig. 4A, include Record Control module 321, Node Specification Editing module 322, CPR Editing module 323, GSS Editing module 324, Graph Editing module 325, Variable Editing module 326, Form Creation module 327, Provisioning module 328, Table Node Editing module 339, and Dialog module 329.

Record Control module 321 interfaces Database module 340 (Fig. 4C) with each of the editing modules (modules 322, 323, 324, 325, 326, and 339) to transfer data from database 203 to editor buffers (not shown) associated with the respective editing modules in the workstation 210 and to transfer (save) data from the editor buffers to database 203. Record Control module 321 also allows a user to prepare a template (described below in section G) for a mass market service.

CPR Editing module 323 allows a user to change the characteristics (i.e., headers, entry points, etc., as described below) of a CPR. To do so, CPR Editing module 323 invokes the Graph Editing module 324 and the Variable Editing module 326 to change corresponding portions of the CPR. The CPR Editing module 323 also allows editing of existing templates.

Graph Editing module 325 allows a user to manipulate the structure or relationship of nodes and branches in a graph. Thus, in conjunction with the Node Specification Editing module 322 and Variable Editing module 326, which allows manipulation of call variables within nodes, the Graph Editing module 325 also allows graphs to be edited and translates the corresponding internal data structures into graphical display representations for display on the display 240 of workstation 210. In addition, the Graph Editing

module 324 allows a user to graphically display and edit the structure or relationship of nodes and branches in a template.

Call Variable Editing module 326 allows a user to add, delete, and modify call variables. Call variables (also referred to as "CVs") identify data elements whose values are processed by CPRs. Before a call variable can be used, it must be defined. CVs can be predefined or user-defined. User-defined CVs can be defined for specific services being created. An example of a user-defined CV is a counter used to count the number of times a loop has been executed. To define a call variable, the following attributes are preferably specified: tag name, scope, extend, data type, and optional initial value. The tag name is a name which identifies the CV. For example, MTOD is the tag name for a time of day CV, MDOW is the tag name for a day of week CV, and QDIALEDNBR is the tag name for a dialed number CV. Scope determines the visibility, e.g. global or local. The extent determining how long the value lasts, e.g. persistent or non-persistent. The value of a global CV is available to all graphs interpreted during call processing of a call query. The value of a local CV is available only to the graph in which it is defined. A persistent CV maintains its value from one call to another. Data type refers to the type of data stored in the CV, which can be, for example, a string or an integer. An optional initial value can be any valid value of the data type indicated for the CV.

Preferred data types include:

a. Signed Integer - This data type is a positive or negative number or zero.

b. Bit String - This data type is a string of binary bits that represent logical values. To be recognized, the bit string preferably begins with the letter "B."

c. Telephone Number - The telephone number data type represents values of telephone numbers. To be recognized, the telephone number preferably begins with a letter from the set T, S, I, and P, where, T = National

Telephone Numbering Plan, I = International Number, S = Special Number, and P = Private Number.

d. String - This data type is a string of characters.

e. Numeric String - This data type is a string of digits, "#," or "*," as can be entered from a telephone keypad.

f. Date - This data type represents a date.

g. Day of Week (DOW) - This data type is used to represent the days of the week.

h. Time of Day (TOD) - This data type is used to represent the time of day.

i. Carrier - The Carrier data type is used to represent an Inter- or Intra-LATA Telephone Carrier Company Designation. For example, LEC, ATX, or 222.

j. Boolean - This data type is used to represent one of only two possible values such as true/false or yes/no.

k. Float - This data type is used to represent a floating point number. The precision is determined by storage restrictions.

l. Signaling Point Code - This data type represents information about network signaling.

m. Measurement Vector - This data type represents a vector of counters.

n. Table - This data type is a table of rows and columns where data is stored (see Section C.2 below).

The Variable Editing module 326 is also used to restrict input values, identify data for templates, and specify user prompt language. In addition, the Variable Editing Module 326 is used to define user input parameters when creating User Defined Nodes (described below in Section F.5).

General Service Specification (GSS) Editing module 324 is used to retrieve, display, and edit a GSS (described below in section E).

Node Specification Editing module 322 allows a user to change the characteristics of a node specification, and thereby define a custom or User-defined node. This module

invokes the Graph Editing module 324 and the Variable Editing module 326 as needed to change corresponding portions of the node specification.

Dialog module 329 provides a set of utilities and procedures called by other editing and display modules. The procedures defined in Dialog module 329 facilitate data entry and/or option selection by the user. These procedures include procedures for defining dialog boxes, which query the user regarding data required for particular inputs and accept the user's input data.

Form Creation module 327 allows a user to create a new user interface for a template. The user interface preferably comprises a displayed list of user prompts and input fields which allow a user to create a CPR from a template.

Provisioning module 328 translates internal data structures into a user interface form. The particular characteristics of the form depend on the data structures of the template created by Form Creation module 327. The Provisioning module 328 also presents available templates, verifies user permissions for templates, and monitors processes for activation of a template based CPR.

Table Node Editing module 339 allows a user to define, edit, and manipulate values in a table data structure. The Table Editing module 339 is invoked by the Variable Editing module 326. As with values appearing within nodes, table values may be expressed in a variety of data types as explained above, with the exception of measurement vector and table data types.

2. Data Structure Modules

As shown in Fig. 4B, the data structure procedures 304 in Fig. 3 preferably include the following data structure modules: CPR module 330, Graph module 331, Node module 332, Branch module 333, Expression module 334, Node Specification module 335, Variable module 336, and GSS module 337. Each of

these data structure modules is particularly related to one or more data structure types.

Upon creation of a graph, the Graph module 331 is invoked to define the data structure which results upon creation of the logical relation between branches and nodes in the graph. Within the Graph module 331, data structures representing individual branches within the graph are further defined by the Branch module 333. Thus, at points in the graph where a branch is required, the Graph module 331 invokes the Branch module 333. Data structures representing individual nodes within the graph are further defined by the Node module 332. Thus, at points in the graph where a node is required, the Graph module 331 invokes the Node module 332. Similarly, expressions within a node are defined by the Expression module 334, which is called as necessary by the Node Specification Editing module 332.

As previously described, preferred implementations of the present invention use object oriented-programming techniques. One aspect of object oriented-programming is that all functions operable upon a particular "object" are defined with the object. Thus, all functions operable upon a graph ("the object") are defined within the Graph module 331. Accordingly, each data structure module preferably represents the data structure (i.e., defines the structure) and allows manipulation (i.e., defines the operable functions) of that data structure. Data structure modules may also use subordinate data structure modules as described above.

CPR module 330 internally represents and allows manipulation of graphs and call variables which define a customer service. This module also handles the representation and manipulation of templates. The CPR module also includes administrative information such as, for example, record ownership and status information. The CPR module 330 invokes Graph module 331 and Variable module 336.

Graph module 331 represents and allows manipulation of the logic section of a graph or the graph section of a User-defined node. Graph module 331 invokes Node module 332 and Branch module 333. It also includes validation information.

Node module 332 represents and allows manipulation of objects corresponding to a single call processing instruction. The single call processing instruction may include complex nodes such as table nodes (described below in Section F.6) and administrative nodes (described below in Section F.3). Node module 332 also includes validation information for a particular node. Node module 331 invokes Node Specification module 335 and Expression module 334.

Branch module 333 represents and handles manipulation of branches within a graph. Branch module 333 invokes Expression module 334 to define conditional branches.

Expression module 334 represents and handles manipulation of data values in CPRs and tables. An expression is a construct that has a value when evaluated. The value that is returned preferably has a data type. The expression is the basic unit of data manipulation. For example, an assignment node (described below in Section F.1) consists of a left-hand part, which is an expression, an assignment operator, and a right-hand part, which is an expression. Expressions can be constants, call variables, or manipulators as defined in the incorporated interface application. In addition, the Expression module 334 includes information about the use of an expression in a template and the presentation of an expression.

Node Specification module 335 represents and handles manipulation of different node types. Node specifications determine for each respective node what type of information is needed by node and how each node will be interpreted by the call processor. The Node Specification module 335 also reads a set of predefined node specifications from a series of system files and typically invokes the Variable module 336 and Expression module 334.

Call Variable module 336 represents and handles manipulation of different types of call variables used in graphs and data sections of CPRs. This module reads a set of variable expressions from a series of files in the database 203. A preferred implementation provides for two types of variables: call variables used in CPRs and node specification parameters used in user-defined nodes.

Generic Service Specification (GSS) module 337 represents and handles manipulation of objects which specify the type of service a graph may represent.

3. Database and Related Processing Modules

As shown in Fig. 4C, the binary procedures 308 in Fig. 3 preferably include Database module 340, Binary module 341, Validation module 342, and Testing module 343. Binary module 341 converts various internal data structures into binary representations that can be transferred between different hardware configurations. This module also performs the reverse process of converting binary representations of CPRs and tables into internal data structures.

Database module 340 stores, retrieves, deletes, and searches on CPRs, templates, user-defined nodes, GSSs, and tables in database 203.

Validation module 342 facilitates CPR validation procedures.

Finally, Testing module 343 simulates call processing execution and produces a resulting "processed" binary representation.

C. System Records

The foregoing hardware and software components cooperate to allow a user to create customer services. Preferably, services are created by the formation of two types of system records: CPRs and tables.

1. CPR Structure

Fig. 5 illustrates a preferred structure or organization of a CPR. The CPR structure 400 includes a CPR record header 402, a global data section 404, entry points 406, local data sections 408, and logic sections 410.

a. CPR Record Header

Each CPR is assigned a unique record header 402 to identify the CPR and associate the CPR to a customer. The record header 402, (also referred to as the CPR key) can be, for example, a ten-digit telephone number. The record header 402 also includes data that characterizes the CPR. For example, the record header 402 may also include a code 412 indicating whether the CPR is "shared" or non-shared. Shared CPRs are used in performing services for multiple subscribers, while non-shared CPRs are used for only one subscriber. The designation of whether a CPR is shared is made by the user. Whether a CPR is shared or non-shared does not change its structure. Shared CPRs are labeled to allow an execution environment to improve performance capabilities by storing shared CPRs in a manner that provides faster access time. The record header 402 may also contain a code 414 indicating whether a CPR can update CPRs or tables in the execution environment and requesting a copy of these updates, and a code 416 indicating whether the CPR controls updating of CPRs and tables in the execution environment. The record header may include a test code 418 to label the CPR as a test CPR. The record header may also include a trace flag 420 which requests a trace of the execution path through the graph.

b. Global Data Section

The global data section 404 includes global data used by the logic of all logic sections 410 within the CPR 400. This

global data may include, for example, declarations and/or definitions of call variables, embedded tables, and measurement vectors.

c. Entry Points

An entry point in a CPR is a point at which call processing can be initiated. Each entry point corresponds to a previously defined graph and an associated local data section, the interpretation and execution of which establishes a customer service. As seen from Fig. 5, a CPR may have more than one entry point; hence, all of a customer's services may be provided on a single CPR.

A user may assign any name to an entry point. Entry points are preferably grouped as "trigger" and "non-trigger" entry points. For example, two entry points have special significance in the execution environment: (1) "ani" which is called to process an originating number query; and (2) "dln" which is called to process a called number query.

Non-trigger type entry points are preferably used by other entry points within the CPR or other CPRs.

d. Local Data Sections

As shown in Fig. 5, each entry point 406 is associated with a local data section 408. The local data section 408 includes local data used only by the corresponding logic section of the associated entry point. This local data includes definitions of call variables of local scope.

e. Logic Sections

Logic section 410 contains the actual call processing logic or call processing procedure corresponding to a particular graph or service.

When a SCP 202 processes a CPR in the execution environment, after having retrieved the CPR based on the CPR

record header 402, SCP 202 reads the global data section 404 and applies all call variable definitions found therein. The SCP 202 then selects an entry point based on a received trigger. The SCP 202 reads the local data from local data section 408 associated with the entry point 406. The call processing logic of the associated logic section 410 is then interpreted using all the data that has been applied.

2. Tables

In accordance with the present invention, tables may be used to store lists of values used in processing one or more CPRs. Tables (also referred to herein as value lists) can be created as stand-alone records or embedded within CPRs. As described below, stand-alone tables are identified by a user, embedded tables are identified using a "Table" call variable.

Tables are defined by a table specification and table data. The table data is laid out in one or more rows corresponding to predefined columns. The table specification defines these columns including data type, maximum size, and whether they are a key column.

Figs. 6A and 6B illustrate the table data and table specification for a table that associates telephone extensions of an office building with a selected telephone number having a maximum length of 15 digits.

The table 500 in Fig. 6A includes two columns: the first column 502 lists the number of extensions in the office building, and the second column 504 lists the telephone numbers associated with each of the three exemplary extensions.

Fig. 6B illustrates the table specification 506 for the table 500 shown in Fig. 6A. The table specification includes four rows: name 508, data type 510, maximum length 512, and key 514. The information defined by these four rows is specified for each of the columns of table data. Thus, as shown in Fig. 6B, the name of the first column is "EXTENSION," and the name of the second column is "TELEPHONE

NUMBER." The data type of the EXTENSION column is a numeric string, and the data type of the TELEPHONE NUMBER column is a telephone data type. The maximum length of the numeric string in the EXTENSION column is four digits, and the maximum length of the TELEPHONE NUMBER in the telephone column is 15 digits. The key specification 514 permits a user to specify which column uniquely identifies a row and allows for more efficient search.

Fig. 6C illustrates a table record structure 518 for a stand alone table. As shown, the structure includes a header section 516, the table specification 506 as shown in Fig. 6B, and the table data 500 as shown in Fig. 6A. For embedded tables, the table specification 506 and table data 500 are stored as part of the call variable that denotes the embedded table.

In a preferred implementation, six operations can be performed on table data: addRow, delRow, updtRow, findRow, selRow, and nextRow. These operations are executed using menu buttons (not shown) which are displayed in a Table Editor Screen (not shown) that is displayed when a user selects the Table Suboption 175d as shown in Fig. 7. The addRow operation adds (or inserts) a set of rows into a table. The delRow operation deletes a set of rows in a table. The updtRow operation updates a set of values in a table. The findRow operation searches a table for a specified row. The selRow operation selects a set of column values from a row of a table that matches a specified condition and returns the values from the first row found. The nextRow operation selects a set of column values from the next row of a table that match the specified condition in a previous selRow operation.

D. CPR Creation

A user creates a CPR by accessing a CPR Editor screen on display 240 of workstation 210. To call up the CPR Editor screen, a user logs onto the system (hereafter "system" is

used to describe a preferred implementation of the present invention running the SPACE application) which presents a system screen 170 as shown, for example, in Fig. 7.

The system screen 170 presents a menu line 172 having five user options: Record, View, Operations, MSAP, and Administration. The user selects an option using either the keyboard 250 or mouse 260 (Fig. 2B). This selection prompts the display of additional options. As shown, for example, in Fig. 7, if the user selects the "Record" option, a menu of Record options 174 is displayed. The user may then select an option from the displayed options by means of the keyboard 250 or mouse 260. The Record options menu 174 includes, for example, options to create a "New" record, "Find" an existing record, "Save" a record, or "Delete" a record. If a user selects the "New" option 177, the system displays associated options 175.

To create a new CPR and enter the CPR Editor, the user selects the CPR option 175a. This selection causes the display of a New Record Information Dialog Box, as shown for example in Fig. 8.

The New Record Information Dialog Box 180 contains five text entry fields: Name field 181, Account field 182, Service Order field 183, Due Date field 184, Supplemental Form field 185, and Service Rep field 186. Preferably, the Name field 181 may contain any user defined alphanumeric string of characters corresponding to a CPR header. The Account field 182 is optionally used to indicate a customer account for which the CPR should be associated. This allows a user to tie together a number of individual CPRs (and other records) under a single customer's account. The Service Order field 183 is optionally used to specify a service order number corresponding to the customer's request for this service. The service order number allows a user to refer to other operations systems, for example, an operations system that handles service orders. The Due Date field 184 is optionally used to indicate when the service being created must be active. The Supplemental Form field 185 is

optionally used to indicate whether the service being created has additional forms in other operations systems. The Service Rep field 186 is optionally used to maintain a record of a representative who may have taken a customer's order for the service being created. The New Record Information Dialog Box 180 also includes Controls DTMF Update field 187, which is used to indicate whether the service being created will be used to control the updating of other services or tables.

Once the respective fields in the New Record Information Dialog Box 180 have been filled-in and checked by the user, the user selects the "OK" button, and the system presents the CPR Editor screen 171, as shown, for example, in Fig. 9.

CPR Editor Screen 171 includes a Graph Window Screen 173, a CPR Information window 176, a Graphs In CPR window 178, a Nodes window 179, a Graph Manipulator window 188, a Provisioning Data window 189, Call Variables field 190, and an Entry Point Information dialog box 195.

The user specifies an initial entry point for the CPR using the Entry Point Information dialog box 195. The Entry Point Information dialog box 195 contains two text entry fields: Name field 195a and GSS field 195b. Preferably, a user enters the name of a trigger type entry point (e.g., "ani" or "dln") or a non-trigger type entry point into the Name field 195a. The GSS field 195b is preferably prepopulated with a "generic" GSS, which is a system supplied GSS that includes every node as optional. The user can optionally specify any enabled GSS in the GSS field 195b.

As shown in Fig. 9, some of the information entered in the New Record Information Dialog Box 180 is displayed in the CPR Information window 176 on the CPR Editor screen 171 (i.e., the Type 176a and the Name 176b). The CPR Information window 176 may also include a user's identification field 176c, a modification date(s) field 176d, and an activation or effective date field 176e for the CPR.

The Graphs In CPR window 178 includes "Add Graph" button 178a, "Delete Graph" button 178b, "Edit Graph" button 178c, "Browse Graph" button 178d, and Graph List 178e.

The Call Variables window 190 includes "Name" button 190a, "Data Type" button 190b, "Value" button 190c, "Defined In" button 190d, "Availability" button 190e, and Same Value After Call button 190f.

The Nodes window 179 includes Nodes List 191, Node Type buttons 192, and Node Function buttons 193, which include a "Change Value" button 193a, "Delete Item" button 193b, "Delete Subtree" button 193c, "Add Branches" button 193d, "Connect" button 193e, and "Hide Subtree" button 193f.

The Graph Manipulation window 188 includes Undo button 188a, Cut button 188b, Paste button 188c, and Copy button 188d.

The Provisioning Data window 189 includes Customer button 189a and Service Order button 189b.

The Graph window 173 also includes a root node 194 which displays the Name (or Key) entered in the Name Field 181 of the New Record Information Dialog Box 180, the "ani" trigger entered in the Name field 195a of the Entry Point Information Dialog Box 195, and the associated GSS entered in the GSS field 195b of the Entry Point Information Dialog Box 195.

In the Graph window screen 173, graph building is accomplished using Graphs In CPR window 178, Nodes window 179, and Call Variables window 190. As described above, CPRs may have one or more entry points; hence, one or more graphs. The Graphs In CPR window allows a user to "Add" a new graph to the CPR, "Delete" an existing graph, "Edit" an existing graph, or "Browse" (view without editing) an existing graph. The name of each entry point in the CPR, as well as an indication whether the entry point is a "trigger" entry point, is displayed in Graph List 178e.

A user creates (and similarly edits) a graph by selecting nodes and logically arranging the selected nodes to form a graph. To select a node, a user first selects the type of node to be added using node type buttons 192. In one embodiment, a set of available nodes is divided into "Assignment" nodes (button 192a), "Decision" nodes (button 192b), "Play Announcement and Get Digits (PAGD) nodes"

(button 192c), and "Other" nodes (button 192d). Assignment and Decision nodes are described below in Section F. PAGD nodes do just what their name suggests; during call processing, they play an announcement to the caller, prompting the caller to input information, and collect the information. Based on the node type button 192 selected by the user, the system displays the available node choices corresponding to that node type in Nodes List window 191.

The nodes of a graph are arranged in the Graph window 173 using the node function buttons presented in Node Function window 193. Preferable function buttons include "Change Value" button 193a for changing the value of a node, "Delete Item" 193b for deleting a node or branch from a graph, "Delete Subtree" button 193c for deleting a portion (subtree) of a graph, "Add Branches" button 193d for adding branches to a node, "Connect" button 193e for logically relating two nodes in a graph, and "Hide Subtree" button 193f for removing a graph portion from the CPR Editor screen in order to facilitate graph creation or editing.

The nodes of a graph are manipulated in the Graph window 173 using the graph function buttons presented in the Graph Manipulation window 188. Preferable function buttons include "Undo" button 188a for successively undoing graph actions, "Cut" button 188b for removing a subtree from a graph and placing it in an internal buffer, "Copy" button 188d for copying a subtree from a graph and placing in an internal buffer, and "Paste" button 188c for copying a subtree from the internal buffer and placing it in a graph.

Call variables of nodes in a graph are preferably defined using the Call Variables window 190. A user assigns a name to each call variable at "Name" field 190a, the data type of a call variable at the "Data type" field 190b, and the "Value" of a call variable at Value field 190c. The CALL VARIABLE window 190 also includes "Defined In" field 190d to identify the CPR, graph, or node in which the call variable is defined. The "Availability" field 190e defines the scope

of the call variable, and the "Same Value After Call" field 190f indicates whether the CV is persistent.

A user can view and modify certain customer account information using the buttons presented in Provisioning Data window 189. Preferable buttons include "Customer" 189a which allows the user to view the customer account record that was specified in the Account field 182 of the New Record Information Dialog Box 180, and "Service Order" 189b which allow the user to view and/or edit the service order information that was entered in the Service Order field 183, Due Date field 184, Supplemental Form field 185, and Service Rep field 186 of the New Record Information Dialog Box 180.

E. General Service Specifications

A General Service Specification (GSS) is a specification for a particular "generic" service which may be created in numerous specific forms to tailor the generic service to a particular customer's needs. For example, many residential telephone customers may wish to prevent "900" calls from being made from their home phones. A "900 Block" service would thus be generally offered to residential customers. However, customers may desire variations in the 900 Block service they receive, thus making some "900 Block" services slightly different from others. Additionally, a service provider may desire certain functionality to monitor or control the use of the "900 Block" service by its customers. Thus, the service provider may desire to specify certain permissible functions which may be included in each customer's "900 Block" service, certain mandatory functions which must be included in each customer's "900 Block" service, and certain restricted functions which cannot be included in a customer's "900 Block" service. The GSS permits the service provider to specify these limitations and requirements for services. It can also be a useful tool for billing and generating service-specific validation nodes.

A GSS contains information that specifies and describes a generic customer service.

1. GSS Creation

To create a GSS, a user accesses the system screen 170 and selects the "Record" option from menu line 172. When the Record option menu 174 is presented, the user selects the "New" option, and the "New" option suboptions window 175 is displayed. The user then selects the "GSS" suboption 175b. Upon selecting the GSS suboption 175b, a dialog box (not shown) is presented to the user. The dialog box simply requests the user to input a name for the GSS.

After the user inputs a name, the system presents the GSS editor screen 120, as shown, for example, in Fig. 10.

The GSS editor screen 120 preferably includes four sections: GSS Information window 122, GSS Description window 124, Required Nodes window 126, and Optional Nodes window 128. The GSS Information window 122 includes a Name field 122a for the name of the GSS entered by the user, a Creator field 122b for the name of the creator of the GSS, a Modified field 122c for dates on which the GSS has been modified, and an Enable field 122d for a date on which the GSS was enabled.

The GSS Description window 124 is used to enter information regarding the customer service related to the GSS. For instance, the GSS description might contain a detailed description of the service to which the GSS is related or an explanation of the reasons why certain nodes are required, optional, or prohibited within CPRs associated with the GSS. For the "900 Block" service described above, a user may provide the following description: "900 Block is a service directed to residential customers who wish to prevent calls beginning with a 900 area code from their home phones."

A user defines which functions are mandatory or optional within each CPR associated with the GSS by identifying (or listing) required nodes and optional nodes for the GSS in the Required Nodes window 126 and the Optional Node window 128,

respectively. Preferably, the Required Nodes window 126 includes a nodes palette 126a, node type buttons 126b, and a selected nodes window 126c. As with the nodes window 179 shown in Fig. 9, to identify required nodes, a user selects the type of node desired using node type buttons 126b. Each available node for that node type is listed in nodes palette 126a. The nodes presented in the required nodes palette 126a may be the same as the nodes appearing in the Nodes List 191 of the CPR Editor's Nodes window 179 (Fig. 9). The selected required nodes are listed in the required nodes section 126c. Each node listed in the required nodes section 126c must be used at least one time in the creation of any CPR associated with the GSS.

The optional nodes list is similarly established using the Optional Nodes window 128 which includes a nodes palette 128a, node type buttons 128b, and a selected nodes section 128c. The optional nodes list indicates which nodes may optionally be used in a CPR associated with the GSS. Any nodes not listed in either the required or optional nodes lists cannot be used in the creation of CPRs associated with the GSS being created.

In an alternative embodiment, the GSS Editor screen 120 further includes a Restricted Nodes window (not shown), which is similar to Required Nodes window 126 and Optional Nodes window 128, but wherein a user specifies nodes which cannot be used in a CPR associated with the GSS.

Once a user is satisfied that the required nodes list, optional nodes list, and restricted nodes list accurately reflect the requirements and limitations necessary to "specify" the service related to the GSS, the user saves the GSS in the database 203. To save the GSS (or any other record), the user selects the "Record" option from the menu line 172. (As shown in Figs. 9 and 10, the menu line 172 appears on the CPR Editor screen 171 and the GSS Editor screen 120.) Once the Record option menu 174 (Fig. 7) is presented, the user selects the "Save" option and the contents of the GSS are stored in the database 203.

Before a subsequent CPR may be associated with the GSS, the GSS must be enabled. To enable a GSS, a user selects the "Operation" option from the first menu line 172 and selects an "Enable" option (not shown) from the Operations options menu (not shown). Preferably, an enabled GSS may not be edited or deleted if other records depend on it, since changes to an enabled GSS could affect records previously associated therewith.

The foregoing description of a method for creating a GSS is summarized in the flowchart shown in Fig. 11. In Fig. 11, a user begins by naming the GSS (step 1000) and describing the GSS and the related service (step 1002). Next, the user defines at least one required node (step 1004), lists the at least one required node (step 1006), defines at least one optional node (step 1008), and lists the at least one optional node (step 1010). Finally, the user stores the GSS in the database (step 1012), enables the GSS (step 1014), and the creation procedure ends (step 1016). In an alternative embodiment, the step of defining at least one restricted node (not shown) would be added. In an alternative embodiment, the user may specify that the GSs has zero or more optional, required, or restricted nodes.

In like manner as described above, a GSS may be created for a template.

2. Validating a CPR in Accordance with an Associated GSS

In accordance with the embodiment of the invention, during a validation process, a graph is examined to determine whether the graph is consistent with the requirements of the associated GSS. If the CPR contains restricted nodes, which are not permitted by the GSS, or does not include the mandatory nodes, the CPR fails the validation process.

Fig. 12 is an example of a GSS Editor screen 120 containing a definition of a GSS named "800basic" for a service that designates a particular long distance carrier

for "800" calls made to the customer between 8:00 a.m. and 5:00 p.m. The 800basic GSS may be compared to another, more complex GSS named "800enhanced" (not shown) which might provide a greater range of potential features (at increased cost) such as, for example, Personal-Identification-Number (PIN) validation and call sampling.

In Fig. 12, the GSS description for the 800basic GSS describes some distinctions between the 800basic service and 800enhanced service. As shown in the Selected Nodes window 126c for the required nodes, the 800basic GSS requires a "Carrier" node which identifies the desired long distance carrier, and a "RouteTo" node which identifies the actual telephone number to which the "800" call should be routed. As shown in the Selected Nodes window 128c for the optional nodes, the optional nodes for the 800basic include the "Day" and "Time" nodes.

Assume for sake of example, that having established the foregoing GSS, a user is attempting to create a graph according to the GSS. Fig. 13A illustrates a portion of such a graph. In Fig. 13A, dialed number "8006993156" (header 701) will be routed according to a decision as to the time of day (node 703). If the time is between 08:00 and 17:00 hours (branch 705), the user wishes to validate a PIN (node 708), select a carrier (node 711), and route the call according to routing node 713. If the time is other than above (branch 707), the user wishes to route the call according to routing node 717. However, because the 800basic service does not allow PIN validation, the PINmatch node 708 must be removed from the graph. This error would be identified to the user during a validation process. A user could then edit the graph to conform to the specified parameters of the 800basic GSS. For example, a graph acceptable under the 800basic GSS is shown in Fig. 13B. The graph in Fig. 13B is the same as the graph in Fig. 13A except for the omission of PINmatch node 708. Note that the graphs of Figs. 13A and 13B include the required "Carrier" and "Route To" nodes.

A preferred method by which the present invention validates a CPR graph against its associated GSS is shown, for example, in Fig. 14. In Fig. 14, the system reads the first node in the graph (step 1052) and determines whether the node is a required node (step 1054). If the node is a required node, the system determines whether the node is the last node in the graph (step 1062). If the node is not the last node in the graph, the system goes to the next node in the graph (step 1064) and repeats the procedure. However, if the first node is not a required node, the system determines whether the node is an optional node (step 1056).

If the node is an optional node, the system repeats steps 1062 and 1064. If the node is not an optional node, the node violates the GSS and fails validation (step 1058). This failed validation is displayed to the user (step 1060).

After the final node in a graph is determined (step 1062), the system determines whether every required node of the GSS is present in the graph (step 1050). If not, the graph fails validation. If, however, every required node of the GSS is present in the graph; the system indicates a successful validation to the user (step 1063).

F. Nodes

As discussed in the set of incorporated patent applications, nodes are the basic units that define the logical operations to be performed during call processing. Each node is therefore a separate call processing procedure or a subprocedure of a graph. Nodes are logically connected to form a directed graph.

1. Action Nodes

Action nodes may be categorized as Assignment nodes, Network Action nodes, and Control nodes.

Assignment nodes are nodes which provide a function that sets a designated call variable to a particular value. The

value may be a constant, another call variable, or the result of a predefined manipulator. Each Assignment node includes a call variable to be assigned a value and an expression.

For example, one example of an Assignment node is a "CARRIER" node. The CARRIER node includes a call variable "RPCARRIER" and an expression. Call variable RPCARRIER is predefined to be a "carrier" data type. For purposes of this example, the RPCARRIER CV may be assigned one value from a set of values including AT&T, MCI, or SPRINT. Accordingly, during creation of a graph containing the CARRIER Assignment node, a user must specify (or assign to) call variable RPCARRIER one of the values defined within the carrier data type (i.e., AT&T, MCI, or SPRINT).

Preferably, Assignment nodes include billing nodes. Billing nodes are of particular importance because service providers must bill customers for the type and quantity of services used by the customer. Accordingly, billing nodes are often one of the required nodes in GSSs. Billing nodes preferably include a BillingInd node, BillingNum node, and BillingType node.

The BillingInd node allows a user to assign a value to one or more predefined "billing indicator" call variables. For example, a billing indicator call variable named RPBILL, may be assigned a 4-digit customer number (i.e., Mr. Jones may be customer 2045) and have a corresponding expression. Thus, a graph having the foregoing BillingInd node allows a user to define "RPBILL = 2045." With this assignment, services provided by the CPR having the graph containing the foregoing BillingInd node will be billed to customer 2045 (Mr. Jones') account.

The BillingNum node allows a user to assign a value to a call variable corresponding to a "billing number," such as a telephone number. For example, the billing number call variable may be named "RPBILLNBR," (i.e. Mr. Jones' telephone number may be 703-308-5555), may be of "telephone number" data type, and may have a corresponding expression. Thus, a graph having the foregoing BillingNum node allows a user to

assign "RPBILLNBR = 7033085555." With this assignment, services provided by the CPR having the graph containing the foregoing billingNum node will be billed to telephone number 703-308-5555.

The BillingType node allows a user to assign a value to one or more predefined "billing type" call variables. For example, a billing type call variable may be named RPMONTHLY, may be of signed integer data type, and may have a corresponding expression. Thus, a graph having the foregoing BillingType node allows a user to assign "RPMONTHLY = 15." With this assignment, services provided by the CPR having the graph containing the foregoing BillingType node will be calculated and billed on the fifteenth day of every month.

Control Nodes allow multiple CPR entry points to be traversed as part of a single call execution and include a Handover node and Transfer Control node. The Handover node allows a CPR to call and execute another graph before continuing with the current CPR graph. The graph may be located in another CPR, thus the Handover node requires that the CPR key, trigger, and entry point for the graph be specified within the Handover node. Once the other graph is processed, processing returns to the original CPR graph.

The Transfer Control node is like the Handover node in that another CPR is specified and executed. Unlike the Handover node, however, the processing does not return to the original graph, but remains at the transferred CPR.

2. Decision Nodes

Decision nodes are used to branch execution through the graph. Decisions as to which graph branch to traverse may be made on the basis of a call variable value and an expression within the decision node. For example, a Call Variable Decision node may include a call variable named "READY" of data type Boolean. This decision node branches one way or the other in a graph based on "READY = yes," or "READY = no." Compare nodes compare expressions. For example, a compare

node may compare the expressions: "$TRYS<3" to determine whether a customer has made less than three attempts to input data to the system. The compare node takes a "yes" branch if the comparison is true and takes a "no" branch if the comparison is false.

Decisions as to which graph branch to traverse may also be made on the basis of a "percent" decision. The Percent Decision node is used to randomly choose one of a number of possible graph branches. The percentage each individual branch will be traversed in the long run is specified in a Percent Decision node at the head of each branch. The sum of all branch percentages will equal 100%.

3. Administrative Nodes

Administrative nodes are used to collect service or customer traffic data which can be used by a service provider to analyze and administrate service or customer usage. Administrative Nodes preferably include Sampling nodes and Measurement nodes.

a. Sampling Nodes

Sampling nodes collect values of selected call variables during call processing execution. Sampling nodes are defined by a sampling rate, a sampling type, and a sample data name. Additionally, a sample data retention period, a collection type, and/or a list of call variables to be collected may be specified for a sampling node.

The sampling rate identifies the percentage of calls to be sampled in order to obtain the specified data. The sample type may be, for example, an "attempt" sample, which captures data when a call is attempted, or a "completion" sample, which captures data when the call is actually completed.

To add a Sample node to a graph, a user selects the "Sample" node from the Nodes window 179 (Fig. 9). A Sample Node Editor Dialog Box 750, as shown for example in Fig. 15,

is then superimposed on the CPR editor screen 170. For a sample node, the Node Editor Dialog Box 750 requests a definition of a sampling rate (0-100%) (field 752), collection type (field 753), sampling type (attempted or completed) (field 754), sample node name (field 755), and the call variable to be sampled (field 756). Once the fields are completed and the user selects the "OK" button, the Sample node is instantiated in the graph. Use of a Sampling node in a graph is illustrated in Fig. 16 and described in more detail below.

b. Measurement Nodes

Measurement nodes count events. Events may be, for example, the number of times a graph or a portion of a graph is traversed, how many times a call variable is changed, etc. Measurement nodes may count up or down from a predetermined starting number. Thus, Measurement nodes are used to update a component of a measurement vector. A measurement vector is an "up count" or a "down count."

Measurement nodes are created during graph building by specifying which component of a measurement vector call variable is to be incremented or decremented. This designation is preferably made in the Call Variable window 190 of the CPR Editor Screen 170 (Fig. 9). Alternatively, the measurement vector call variable, the measurement vector component, and the increment/decrement designation are provided in response to prompts in a measurement node Editor Dialog Box (not shown) similar to the Sample Mode Editor Dialog Box 750 shown in Fig. 15.

The system uses a unique counter created when the measurement vector was defined. The counter is loaded with the starting point value and changes the value (up or down) on the basis of subsequent measurements.

Fig. 16 shows part of a graph incorporating a Sample node and Measurement nodes. In this graph, calls originating from a customer's number "3014447500" (header 720) are routed

based on a determination of the "900?" node (721). For this example, the 900? node is a User-defined node (described below) which accepts a telephone number, determines the area code of the telephone number, compares this area code to a constant call variable value of 900, and selects a graph branch on the basis of this comparison.

If the dialed telephone number does not have an area code of 900, the call is "counted" by a Measurement node named "Measureother" (node 723), assigned a carrier (node 724), and routed according to routing node 725. If, however, the dialed telephone number has a 900 area code, the call is counted by a Measurement node named "Measure900" (node 733), sampled by a Sampling node named "Sample 900," (node 734), and routed according to routing node 735.

Measureother node 723 and Measure900 node 733 each has an assigned counter which counts up from zero to measure the number of outgoing phone calls having non-900 and 900 area codes, respectively. Accordingly, the number of uses for each branch of the graph can be measured.

In the above example, the "Sample900" node 734 has been previously defined to sample a predetermined call variable. Assuming a sample rate of 20, the Sample900 node will sample the predetermined call variable once every five calls having a 900 area code.

Data measured or sampled is preferably stored in a database for review by the service provider and/or the customer.

4. Interaction Nodes

Interaction nodes preferably include two types of nodes: Network Interaction Nodes and External System Interaction Nodes.

a. Network Interaction Nodes

Network Interaction nodes preferably include a Connect node, a Terminate node, and a Play Announcement and Collect Digits Node. The Connect node allows a user to route a call to a designated number. The routing number is specified as a call in the Connect node. The Terminate node allows a user to block a call. Once a graph reaches a Terminate node, all call processing is halted. The Play Announcement and Collect Digits node, as discussed above, is used to play an announcement to the customer, and then collect digits (i.e., DTMF signals) from the user in response to the announcement.

b. External System Interaction Nodes

This node type preferably includes a GetData node, SendData node, and WaitForEvent node. The GetData node allows the user to send a message to an external system (outside the SCP) requesting certain data from that external systems data base to be placed in call variables that are specified in the node. The SendData node allows a user to send a message to an external system (outside the SCP) to store certain data as provided in call variables that are specified in the node, in the external system's data base. The WaitForEvent node allows the user to wait for the completion of an external event such as any GetData or SendData operation before call processing will continue.

Fig. 17 illustrates a graph using GetData, SendData, and WaitForEvent nodes. In the graph of Fig. 17, GetData node 1800a requires the SPACE system to get a value from a different system, return it to the SPACE system and put it into a call variable entitled Event 1. Call variable decision node 1800b may be, for example, a day of week decision node which compares the Event 1 call variable to value 1 in decision branch 1800c, which may be, for example, the values equal to Monday-Friday. If the call variable in Event 1 is equal to value 1, GetData node 1800d requires the

SCP to retrieve a value from a system outside the SCP and put it into a call variable entitled Event 2. Because the external system from which GetData node 1800d is retrieving a value may be located far away from the SCP or may be busy, it may require some time to return the value. Accordingly, WaitForEvent node 1800e tells the SCP to wait until the value is returned before further processing. If at node 1800b the event 1 call variable is something other than value 1, it will be processed through branch 1800f. SendData node 1800g causes the SCP to send a call variable specified in event 3 to an external system. WaitForEvent node 1800h awaits the completion of the SendData operation.

5. User-Defined Nodes

User-defined (or custom) nodes are single nodes having an underlying graph associated therewith. The underlying graph is defined by the user, hence the name. A displayed representation of a User-defined node will have the appearance of a single node even when that particular User-defined node contains multiple nodes.

To create a User-defined node, a user displays the system screen 170 and selects the "custom node" suboption 175c (Fig. 7). The system then displays a dialog box (not shown) requesting the user to input a name for the custom node. Once the name has been entered and the user selects the "OK" button, the Custom Node Editor screen 791 is displayed, as shown in Fig. 18.

Custom Node Editor screen includes a Custom Node Information window 798, which includes "Name," "Creator," "Modified," and "Effective" fields 798a-d, similar to these same fields for the CPR and GSS Editor screens (see Figs. 9 and 10).

The underlying graph of a custom node is built by the user in the Graph Editor portion 796 of the Custom Node Editor screen. Graph building on the Graph Editor portion 790 proceeds in a manner similar to the graph building

process described with respect to the CPR Editor screen 171 in Fig. 9.

The Custom Node Editor 791 also includes parameters window 797 which displays a list of parameters associated with the custom node being generated. These parameters define the relationship of the input fields for the custom node and the values within the graph. A parameter is a variable that will be filled in by the user of the custom node when it is inserted into a graph.

A Parameter Editor 1900, as shown for example in Fig. 19A, is used to create and modify parameters for a custom node. The Parameter Editor 1900 is displayed by "mouse clicking" on a preselected portion of the Parameters window 797. Parameter Editor 1900 prompts the user to complete a "parameter name" field 1900a, a "data type" field 1900b, an "allow" field 1900c, and an "interface" field 1900d. The parameter name is used when referring to this parameter as part of the value of a node. The "allow" field specifies permissible values for the parameter. For example, in Fig. 19A, the "allow" field 1900c permits only constants and call variables for the "Pin" parameter.

Using "Interface" field 1900d, the user can specify the type of interface to be displayed to a user of the customized node. Preferable interfaces include text fields, buttons, or selection lists. If a user designates the interface to be either buttons or selection lists, a Selection List Editor, as shown for example in Fig. 19B, is displayed.

The Selection List Editor 1902 allows the user to enter a list of labels which will be displayed when a custom node having the parameter being defined is used, as well as values associated with the labels.

The Selection List Editor 1902 includes a "Labels Defined In" field 1902a, a "Name" field 1902b, a "Label/Value" field 1902c, and a "Manipulators" field 1902d. Labels for a parameter may be defined in the Label/Value field 1902c or in another parameter. This allows a user to tie together the values of the parameters. Fields 1902a and

1902b permit the user to specify in which parameter the labels are defined. Label/Value field 1902c provides a list of labels that will be presented to user of the custom node. In Fig. 19B, for example, the labels for the personal identification number (PIN) are "Choice 1," "Choice 2," and "Choice 3." The actual values specified for these labels are "1221," "2212," and "1234," respectively. The labels for values provide for a more user-friendly interface. Manipulator buttons 1902d are used to manipulate labels and values in the Label/Value field 1902c.

Parameter Editor 1900 also includes Prompt field 1900e, which allows a user to designate the text of a prompt should the user select the interface to be a text field. For example, in Fig. 19A, a user has selected a text field interface and specified the text field to read "Enter a PIN number."

Returning to Fig. 18, the Custom Node Editor 791 also includes Edit Help option 792, Set Category option 793, Layout option 794, and Preview option 795, each of which allows the user to define a portion of the Custom node.

The Edit Help option 792 invokes an Edit Help Editor (not shown) which contains a written description of the custom node. Upon creation or modification of a custom node, the user may edit the written description regarding the custom node.

The Preview option 795 displays a Preview Editor 2000, as shown for example in Fig. 20. Preview Editor 2000 includes a Name field 2000a to identify the node for which information will be requested. Field 2000b displays the user interface that was specified in the prompt field 1900e and the interface field 1900d of the Parameter Editor 1900. For PIN nodes, the system permits the user to specify the number of PIN retries that will be permitted; hence, Fig. 20 includes "retries" field 2000c.

The layout of the fields presented in the Preview Editor can be changed using the Layout option 794. The Layout option 794 displays a Layout Editor 2100, as shown for

example in Fig. 21. As shown, the Layout Editor 2100 includes the same fields 2000a, 2000b, and 2000c, as displayed in the Preview Editor 2000. However, in the Layout Editor 2100, these fields can be manipulated by selecting a field (using select buttons 2100a) and clicking on one of the manipulator buttons 2100b.

The Set Category option 793 is used to establish a node category type for the custom node being created when a user selects the Set Category option 793, the system displays a Custom Node Category Editor 804, as shown for example in Fig. 22. Using the Custom Node Category Editor 804, a custom node may be assigned to any of the node types represented by the node type buttons 192 (Fig. 9).

When the custom node is fully defined and categorized, the user enables the node by selecting an "Enable" suboption (not shown) from the "Operations" menu (not shown) on the System screen 170 (Fig. 7). Preferably, the underlying graph is validated prior to being enabled. Once a User-defined node has been enabled, it will appear in the nodes list 191 of the CPR Editor screen 171 and the nodes lists 126a and 128a of the GSS Editor screen 120.

When a CPR containing a custom node is trace tested, the custom node will be displayed as a single node. In other words, the underlying graph is not displayed. However, individual nodes within the underlying graph of the custom node are tested in the same manner as other nodes in the graph. Each node of the underlying graph of a custom node is also considered during validation. Thus, errors and warnings generated by a testing or validation process can be specified to a particular node within the underlying graph of the custom node.

6. Table Nodes

a. Intable node

An Intable node determines whether a particular value exists in a particular table and selects between two branches of a graph depending on the determination.

An example of a graph using an Intable node is shown in Fig. 23. In this graph, calls originating from telephone number 703-308-5555 (see header 1200) are checked by Intable node 1201 to see if the dialed number is listed in a Table of prohibited telephone numbers. For this example, Intable node 1201 is named "Prohibited." If the Prohibited node finds the dialed number in the Table, an announcement is played (node 1203) informing the caller that the dialed call cannot be completed, and the call is terminated (node 1204). However, if the dialed number is not found in the table, the call is routed according to routing node 1202.

The table designated and searched by the "Prohibited" node might be a single column table listing all prohibited telephone numbers (1220) like the one shown, for example, in Fig. 24. Alternatively, the designated table might be a multiple column table such as that shown in Fig. 6A, in which case the Intable node which designates and searches the table must also designate the column to be searched.

The Intable node includes a search expression defining search criteria for locating a particular table row in a standalone table or a table call variable. The search criteria is a list of column value pairs. Preferable values for search columns are any valid column names within the specified Table. Preferable values for the search value are any valid values for the search column (e.g., a string if the search column contains string data type information) or the name of a call variable (preceded by a dollar sign) whose value is of the same data type as the search column.

A user specifies the foregoing criteria using an Intable Node Editor 2200, as shown for example in Fig. 25, which is

displayed when a user selects an Intable node from a nodes list.

Intable Node Editor 2200 includes Name field 2200a corresponding to this node type. The table search criteria is inserted in search fields 2200b-e. Table Name field 2200b specifies the table to be searched. Column field 2200c specifies the column or columns of the table to be searched. Value field 2200d specifies a value to be searched for in the specified column. Finally, Expression field 2200e permits a user to specify comparison criteria for the value specified in field 2200d and the values in the table. In a preferred embodiment, the comparison criteria in the Expression field 2200e includes "=," "=," ">," "<," "≥," and "≤."

In a preferred implementation of the present invention, a method by which the system executing an Intable node searches a designated table and outputs a response is illustrated in the flowchart of Fig. 26. Initially, when executing a table node the system reads the Table name designated by the Intable node (step 1230) and determines whether such a table exists (step 1231). If not, an error is indicated (step 1235). If the table is found, however, the system reads the Column names to be searched (step 1232) and determines whether the Columns exist in the Table (step 1233). If not, an error is indicated (step 1235). Once the Table and Columns are found, the system reads the value(s) to be searched (step 1236), and searches the Table Columns using the expression contained in the Intable node to compare the specified values to values in the Table (step 1237). If the value(s) are found in the Table, the call is processed one way; if the value(s) are not found in the Table, the call is processed another way, as designated by the branches in the graph.

b. Table node

The Table node allows a user to determine whether a row exists in a designated Table that meets certain specified criteria, and, if a row exists, to retrieve a value from one or more of the columns in that row. The retrieved value is used by nodes of a graph which follow the Table node.

Like the Intable node, a Table node has an associated table name and a list of column value pairs. For each column from which values will be retrieved, a call variable is defined. Preferable values for retrieve and search columns are any valid column names within the specified Table. Preferable values for the search values are any valid values for the search column (e.g., a string if the search column contains string data type information) or the name of a call variable (preceded by a dollar sign) whose value is of the same data type as the search column.

When a user selects a Table node from a nodes list, the system displays

Table Node Editor 2300, as shown for example in Fig. 27. Unlike an Intable node which return a yes/no boolean value, a Table node retrieves and returns a value from a table. However, field 2300a of the Table Node Editor 2300 allows a user to specify a call variable to which an indication of whether the search was successful can be assigned. In this manner, the user gets "yes/no" search information, similar to an Intable node. Table Node Editor 2300 also includes a "name" field 2300b, which is used to specify the table to be searched, as well as "search matrix" field 2300c and "retrieve" matrix field 2300d. In search matrix field 2300c, a user specifies the column name, a value to be compared, and a comparison expression, in a manner similar to the Intable Node Editor 2200. Search criteria can be entered or deleted using manipulator button 2300e. Search matrix field 2300c also permits a user to specify whether a search of the table should be made with respect to "all" or "any" of the specified search criteria. In retrieve matrix field 2300d, a

user specifies the column name or names of a table from which to retrieve a value and the corresponding call variable name or names to which the retrieved value(s) should be assigned. Additional column names and call variable names can be added or deleted using manipulator buttons 2300f.

Upon execution of a graph having a Table node, the call variables designated by the TABLE node will have either values obtained from the table designated or null values.

A preferred method by which the system executing a graph having a TABLE node searches a designated table and outputs a response is illustrated in the flowchart of Fig. 28. Initially, the system sequentially reads the call variables designated in the Table node (step 1250), the table name designated by the Table node (step 1252), and the Column names designated in the Table node (step 1254). After reading each of these designations, the system respectively determines whether each exists (steps 1251, 1253, and 1255). If one does not exist, an error is indicated (step 1256). Once the call variables, table, and column names have been read, the system reads the search values (step 1256) and searches the Table using the comparison expressions contained in the Table node (step 1257). If values are found in the columns which meet the requirements of the search values, the values are output (step 1259). If no such values are found, "null" values are output (step 1260).

G. Templates

Many customers may request the same telecommunication service for mass markets. For example, many customers may wish to designate a long distance carrier during certain times of the day (i.e., business hours). Each customer's graph would therefore be identical except for call variables and nodes and branches defining the carriers and nodes defining the time of day that specified carriers will service the call. All other nodes in the graph and the structure of the graph would be "generic" to the service.

It is impractical and inefficient to require a user to build the same graph for every customer requesting the same service. Accordingly, the present invention provides for templates. Once created and enabled, a template serves as a "form" for creating a customer specific version of a service. Customer specific versions of a service are established by providing values for "customizable" expressions in a node, branch, or call variable within a template. In this manner, the template allows the same service to be provided to more than one customer without having to rebuild the entire graph or redefine generic call variables in the CPR establishing the service. "Customizable" nodes in a template are different from User-defined or "custom" nodes described above. A User-defined or "custom" node is a single node representation having an underlying graph (including more than one node) which defines the "custom" node's functionality. A "customizable" node in a template is a partially defined, single node which is completed by a user during CPR building in accordance with customer specific data. In a like fashion branches and call variables can be made customizable.

Templates are preferably created from preexisting CPRs. To create a template, a user opens the CPR Editor screen 171 and displays a graph from which he or she desires to make a template. With the graph displayed, the user selects the "Operations" option on the menu line 172 of the CPR Editor screen 171 (Fig. 9). In response to this selection, the system displays the Operations menu of suboptions (not shown). One of these suboptions is a "Make Templates" suboption (not shown), which the user selects.

In response to selection of the Make Template suboption, the system displays a Make Template Information Dialog Box (not shown), which prompts the user to enter a name for the template. After the user names the template, a Template Editor screen 910, as shown for example in Fig. 29A, is displayed.

Template Editor screen 910 includes a Template Record Information window 911, a Call Variables window 913, a Graphs In Template window 912, and a Form Operations window 914. The Template Record Information window 911 includes "Name," "Creator," "Modified," and "Effective" fields 911a-d, similar to these same fields for the CPR, GSS, and Custom nodes screens (see Figs. 9, 10, and 18). The Graphs In Template window 912 and Call Variables window 913 of the Template Editor screen 910 operate in the same way as the Graphs in CPR window 178 and the Call Variables window 190, respectively, of the CPR Editor screen 171 (Fig. 9). Form Operations window buttons 914a and 914b are described below.

The graph 925 from which the template is being created is displayed in Graph window 920. The exemplary graph of Fig. 29A provides for a predetermined carrier for all calls made to a particular telephone number and routes the calls to one of two telephone numbers depending on whether the calls are made on a weekday or weekend. A user from which the template is being created can select which of the nodes of the graph he or she wishes to make customizable by clicking a mouse or similar device on the node.

Each expression in the selected node can be designated as customizable. For example, assume that the template creator selects the "Carrier" node 925a to be customizable. In response to this selection, the system displays a Template Carrier Node Editor 930. Template Node Editors in general differ from CPR Node Editors because Template Node Editors include customizable selection buttons 935, which allow a user to designate which node expressions will be customizable. For example, in Fig. 29B, the carrier type is not customizable, but is fixed as primary. However, the carrier value is customizable. Text fields 936a and 936b are provided to specify a prompt which will be displayed to a user to collect the customizable information for the node.

In like manner, to make a branch a call variable customizable, in response to a selection of the branch or call variable by the user, the system prompts the user to

identify the expressions to be made customizable using a Template branch or Template call variable Editor (not shown) similar to the template node editor described above. This prompt is used in both a form representation and a graph representation of any CPR based on this template.

Following customization of the node expressions, the user returns to the Template Editor screen 910 wherein node 925a of the displayed graph 925 is preferably indicated as a "customizable" node in the template by means of a different color or different colored border.

As described above, a user can display a CPR as either a graph or a form representation. A template creator can view the graph representation in the graph window 920, but can also browse and manipulate the form representation using Form Operators window 904.

Form Operations window 914 includes "Layout" and "Preview" options 914a and 914b, respectively. Selection of the "Preview" option 914b causes the system to display a Preview Editor 915 as shown for example in Fig. 29c. The Preview Editor 915 displays the CPR in its form representation to the template creator. When initially displayed, because the template is being created from an existing graph, the information fields 915b-915e of the Preview Editor 915 may contain information relating to the existing graph. Because the template creator is creating a template and not an external CPR based on the template, the creator cannot modify the information displayed in the form. In the example of Fig. 29C, the template form tells the template creator that a user using this template to create a CPR will specify a primary carrier (field 915b) and different routing numbers for selected weekdays and weekends (fields 915c-915e). The Preview Editor 915 also includes information field 915a to display the template name, creator, and modification dates.

The layout of the information viewed in the Preview Editor 915 can be modified using the "Layout" option 914a.

Selection of the "Layout" option 914a causes the system to display a Layout Editor 916, as shown for example in Fig. 29D. The Layout Editor 916 includes the same fields 915a-d as shown in the Preview Editor 915, and shows the layout of information that will be presented to a user creating a CPR based on a particular template. A set of manipulator buttons 916a is provided to allow the user to change the order of the fields. Preferably, only the order of the entry fields is changed in the Layout Editor 916.

After the user makes "customizable" all the nodes required to transform the CPR graph 925 into an appropriate template, the user enables the template by selecting an Enable suboption (not shown) from the main menu bar "Operations" Menu (not shown). The enabled template is then available for making template-based CPRs and can be stored in the database 203.

A user creates a template-based CPR by selecting the "Find Template" option 178 under the Record menu of the main menu bar 172. Selection of the "Find Template" option causes the system to display a Find Editor 950, as shown for example in Fig. 30, which displays in list window 950a a list of templates stored in database 203. For each template stored in database 203, the system displays the name, status, and creator of the status, as well as dates the template was enabled and modified. Find Editor 950 also includes search fields 950b, which allow a user to designate search criteria to search the template list. Menu buttons 950c permit a user to edit, browse, delete, customize, or cancel a selected template.

A user selects a template by selecting the template name (e.g., mouse click) in the template list 950a and selecting the customize button. In response to these selections, the system displays a New Record Information Dialog Box requesting the user to input a name of the template-based CPR. The user then has the option of viewing the template-based CPR in a graph representation (which looks like the graph 925 shown in Fig. 29A) or in a form representation

(which looks very much like the information presented in the Preview Editor 915 (Fig. 29C)). The user can only input values for the expressions and call variables that the template creator indicated as customizable. After inputting the custom values, the user can test, validate, and activate this CPR just like any other CPR.

H. SUMMARY

While there has been illustrated and described what are at present considered to be preferred implementations and methods of the present invention, it will be understood by those skilled in the art that various changes and modifications may be made, and equivalents may be substituted for elements thereof without departing from the true scope of the invention.

In addition, many modifications may be made to adapt a particular element, technique or implementation to the teachings of the present invention without departing from the central scope of the invention. Therefore, it is intended that this invention not be limited to the particular embodiments and methods disclosed herein, but that the invention include all embodiments falling within the scope of the appended claims.

WHAT IS CLAIMED:

1. A method of creating, in response to inputs from an operator of a record creation system in a telecommunication network, a general service specification for a call processing record containing logically related nodes and branches, the method comprising the steps, executed by a processor in the record creation system, of:

prompting the operator to identify at least one optional node which may appear in a call processing record associated with the general service specification;

receiving from the operator an identification of at least one optional node which may appear in the call processing record associated with the general service specification;

prompting the operator to identify at least one required node which must appear in the call processing record associated with the general service specification;

receiving from the operator an identification of at least one required node, which must appear in call processing records associated with the general service specification; and

enabling said at least one optional node and said at least one required node as a general service specification.

2. A method according to claim 1, further comprising the steps of:

prompting the operator to identify at least one restricted node which cannot appear in the call processing record associated with the general service specification;

receiving from the operator an identification of at least one restricted node which cannot appear in the call processing record associated with the general service specification; and

enabling at least one restricted node as part of the general service specification.

3. A method of creating, in response to inputs from an operator of a record creation system, a call processing

record for execution in a telephone service execution environment, comprising the steps, executed by a processor in the record creation system, of:

comparing each node of said call processing record against a list of optional and required nodes included in a general service specification, optional nodes being nodes which may be used in the call processing record, and required nodes being nodes which must be used in the call processing record;

indicating to the operator a failed validation procedure if said call processing record does not contain the nodes listed in the required nodes list or contains nodes not listed in either the required nodes or the optional nodes list; and

indicating to the operator a successful validation procedure if said call processing record does not contain the nodes listed in the required nodes list and does not contain nodes that are not listed in either the required nodes or the optional nodes list.

4. A method according to claim 3, further comprising the steps of:

comparing each node of said call processing record against a list of restricted nodes, restricted nodes being nodes which cannot appear in a call processing record; and

indicating to the operator a failed validation procedure if said call processing record does contain a node listed in the restricted nodes list.

5. A method of creating, in response to inputs from an operator of a record creation system, a template for the creation of call processing services, each call processing service being represented by a call processing record containing logically related call processing nodes, branches, and call variables, the method comprising the steps, executed by a processor, of:

displaying to the operator a selected call processing record;

receiving from the operator an identification of a selected node in the call processing record to be made customizable, a customizable node being a node for which subsequent template users can specify predetermined expressions;

displaying to the operator all expressions of the selected node;

prompting the operator to identify which of the selected node expressions will be customizable;

receiving from the operator an identification of an expression of the selected node which will be customizable; and

enabling the selected call processing record and the designation of customizable node expressions for the selected node as a service template.

6. The method according to claim 5, further comprising the step of displaying the service template as a graph representation or a form representation.

7. A method of creating, in response to inputs from an operator of a record creation system, a template for the creation of call processing services, each call processing service being represented by a call processing record containing logically related call processing nodes, branches, and call variables, the method comprising the steps, executed by a processor, of:

displaying to the operator a selected call processing record;

receiving from the operator an identification of a selected branch in the call processing record to be made customizable, a customizable branch being a branch for which subsequent template users can specify predetermined expressions;

displaying to the operator all expressions of the selected branch;

prompting the operator to identify which of the selected branch expressions will be customizable;

receiving from the operator an identification of an expression of the selected branch which will be customizable; and

enabling the selected call processing record and the designation of customizable branch expressions for the selected branch as a service template.

8. A method of creating, in response to inputs from an operator of a record creation system, a template for the creation of call processing services, each call processing service being represented by a call processing record containing logically related call processing nodes, branches, and call variables, the method comprising the steps, executed by a processor, of:

displaying to the operator a selected call processing record;

receiving from the operator an identification of a selected call variable in the call processing record to be made customizable, a customizable call variable being a call variable for which subsequent template users can specify predetermined expressions;

displaying to the operator all expressions of the selected call variable ;

prompting the operator to identify which of the selected call variable expressions will be customizable;

receiving from the operator an identification of an expression of the selected call variable which will be customizable; and

enabling the selected call processing record and the designation of customizable call variable expressions for the selected call variable as a service template.

9. A method of creating, in response to inputs from an operator of a record creation system, a call processing service from a service template stored in a database, a service template comprising a call processing record of logically related call processing nodes, branches, and call variables, at least one of said call processing nodes being customizable, a customizable node having at least one

variable expression, the method comprising the steps, executed by a processor, of:

retrieving the service template from the database;

displaying a representation of the retrieved service template;

prompting the operator to provide information to specify at least one variable expression of the at least one customizable node;

defining the variable expression of the at least one customizable node with the information provided by the operator; and

enabling the displayed representation of the retrieved service template and defined expression as a call processing record.

10. A method of providing a requested service to one or more customers of a telecommunication network, the method comprising the steps, executed by a data processor of the telecommunication network, of:

creating one or more call processing records each including a plurality of call processing procedures for execution by a call processing environment of the telecommunication network;

creating a table of data associated with each of said one or more call processing records;

storing said one or more call processing records and said table of data;

executing one of said processing records in the call processing environment; and

retrieving data from said table of data during the execution of said one of said call processing records.

11. In a telecommunication service creation environment in a telecommunication network providing for call processing records and value tables, each of the value tables comprising one or more columns and one or more rows of values, a method of creating a call processing procedure to determine whether a particular value exists in a particular value table comprising the steps, executed by a data processor, of:

prompting an operator to identify a value table to be searched;

receiving from the operator an identification of a value table to be searched;

prompting an operator to identify one or more columns in the value table to be searched;

receiving from the operator an identification of one or more values in the value table to be searched;

prompting an operator to specify a value to be searched for in the one or more identified;

receiving from the operator a specified value to be searched for in the one or more columns to be searched;

prompting an operator to specify comparison criteria for the specified value in the column to be searched;

receiving from the operator a comparison criteria for the value specified and values in the column to be searched; and

instantiating the table name, one or more columns, value to be searched for, and comparison criteria as part of the call processing procedure.

12. A method of providing call processing in a telecommunication network comprising the steps, executed by a processor, of:

retrieving a call processing record from storage in response to a request to process a call;

executing call processing procedures specified in the call processing record;

reading a table name specified in a predetermined call processing procedure;

accessing a value table corresponding to the table name;

reading one or more column names, a search value, and comparison criteria specified in the predetermined call processing procedure;

searching the specified one or more columns of the accessed value table;

comparing values in the one or more columns to the specified search value in accordance with the specified comparison criteria;

generating a first output if the comparison criteria is met during the comparing step; and

generating a second output if the comparison criteria is not met during the comparing step.

13. In a telecommunication service creation environment providing for call processing records and value tables, the value tables comprising one or more columns and one or more rows of values, a method of creating a call processing procedure to retrieve a value from the value table for call processing, the method comprising the steps, executed by a data processor, of:

prompting an operator to name a value table to be searched;

receiving from the operator a name of the value table to be searched;

prompting an operator to identify one or more columns in the value table to be searched;

receiving from the operator on identification of one or more values in the value table to be searched;

prompting an operator to specify a value to be searched for in the one or more columns to be searched;

receiving from the operator a value to be searched for in the one or more columns to be searched;

prompting an operator to specify comparison criteria for the value specified and values in the column to be searched;

receiving from the operator a comparison criteria for the value specified and values in the column to be searched;

prompting an operator to specify one or more call variable names to which one or more retrieved values should be assigned;

receiving from the operator one or more call variable names to which one or more retrieved values should be assigned; and

instantiating the table name, one or more columns, one or more values to be searched for, comparison criteria, and one or more call variables as part of the call processing procedure.

14. A method of designing a procedure to direct a telecommunication network to provide requested services to an individual customer of the network, the method comprising the steps, executed by a data processor in the network, of:

presenting the customer with a plurality of types of nodes, the nodes indicating the determinations and actions allowable for the procedure;

receiving from the customer selections of desired nodes;

receiving from the customer selections of desired relationships between the desired nodes;

receiving from the customer values for parameters to be used with the desired nodes; and

constructing a graphical representation of the desired nodes reflecting the customer values and the indicated relationships among the nodes, wherein one of said nodes comprises a sample node for determining the amount of activity that occurs in a portion of the graphical representation including the sample node.

15. A method according to claim 14, wherein said step of receiving from the customer values for parameters to be used with the desired nodes includes the steps of:

receiving a sampling rate for said sample node, said sampling rate identifying a percentage of the call processing executions to be sampled;

receiving a collection type for said sample node, said collection type defining whether results of the activity should be collected presently or deferred;

receiving a sampling type for said sample node, said sampling type defining whether the activity should be determined based on attempts or completions;

receiving a sample name for said sample node, said sample name defining a name for data collected; and

receiving a list of call variables to be collected.

16. A method of designing a procedure to direct a telecommunication network to provide requested services to an individual customer of the network, the method comprising the steps, executed by a data processor, of:

presenting the customer with a plurality of types of nodes, the nodes indicating the determinations and actions allowable for the procedure;

receiving from the customer indications of desired nodes;

receiving from the customer indications of desired relationships between the desired nodes;

receiving from the customer values for parameters to be used with the desired nodes; and

construction of a graphical representation of the desired nodes reflecting the customer values and the indicated relationships among the nodes, wherein one of said nodes comprises a measurement node for counting a predetermined call processing event.

17. A method according to claim 16, wherein said step of receiving from the customer values for parameters to be used with the desired nodes includes the steps of:

receiving a call variable naming a measurement vector;

receiving a component name identifying a component within the measurement vector which will be incremented or decremented; and

receiving information specifying when the measurement vector should be incremented or decremented.

18. A method of providing a call processing measurement node to count call processing events, the method comprising the steps, executed by a processor, of:

prompting an operator to input values for parameters to be used with the measurement node;

receiving from an operator a call variable naming a measurement vector;

receiving from an operator a component name identifying a component in the measurement vector;

receiving from an operator information specifying whether the component should be incremented or decremented; and

instantiating said call variable name, component name, and increment or decrement information as a measurement node.

19. A method of creating, in response to inputs from an operator of a telecommunications system, a user-defined call processing node for a call processing record containing logically related nodes and branches, the method comprising the steps, executed by a processor of the system, of:

receiving an instruction from the operator to construct a user-defined call processing node;

presenting to said operator, in response to the instruction, a screen with which to construct the user-defined call processing node;

presenting the operator with a plurality of types of predefined nodes;

receiving from the operator selections of predefined nodes;

arranging said selected predefined nodes into an underlying representation of call processing procedures; and

enabling the underlying representation of call processing procedures as a single node for use in creating call processing records.

20. The method according to claim 19, wherein the underlying representation of call processing procedures is a graphical representation or a form representation.

21. The method according to claim 19, further comprising the step of requesting the operator to specify parameters for the underlying representation of call

processing procedures, said parameters defining call variables for which values can be provided at a later time.

22. The method according to claim 21, further comprising the step of receiving from the operator a parameter name, data type, allowed inputs, and interface type.

23. A call processing record for execution in a telephone service execution environment, comprising:

at least one call processing logic section including call processing procedures executable by a processor in said telephone service execution environment;

at least one first data section, each of said at least one first data sections being associated with one of said at least one call processing logic sections and storing data executable only by said call processing procedures included in the associated one of said at least one call processing sections; and

at least one entry point, each of said at least one entry points being associated with one of said at least one call processing logic sections and an associated one of said at least one first data sections, said at least one entry point identifying the associated one of said at least one call processing sections.

24. A call processing record according to claim 23, further comprising a second data section including data executable by call processing procedures in each of said at least one call processing logic sections.

25. A call processing record according to claim 23, further comprising a record header identifying said call processing record and including a telephone number for the corresponding telephone service subscriber.

26. A call processing record according to claim 23, wherein one of said at least one entry points comprises a trigger identifying a telephone call either originating from a called telephone number or being made to a called telephone number.

27. A method of executing a call processing record for execution in a telephone service execution environment, said call processing record including a plurality of call processing procedures corresponding to a plurality of different services, each of said call processing procedures including a plurality of call processing subprocedures said method comprising the steps, executed by a data processor, of:

receiving a query from a telephone switch, said query including a telephone number and a trigger;

selecting a call processing record from a storage area based on said telephone number;

selecting one of said plurality of call processing procedures based on said trigger;

executing said one of said plurality of call processing procedures to obtain call processing information; and

returning said call processing information to said telephone switch.

28. A method according to claim 27, further comprising the steps of:

reading first data from a first data section of said call processing record; and

applying said first data to appropriate subprocedures of said one of said plurality of call processing procedures.

FIG. 1
(PRIOR ART)

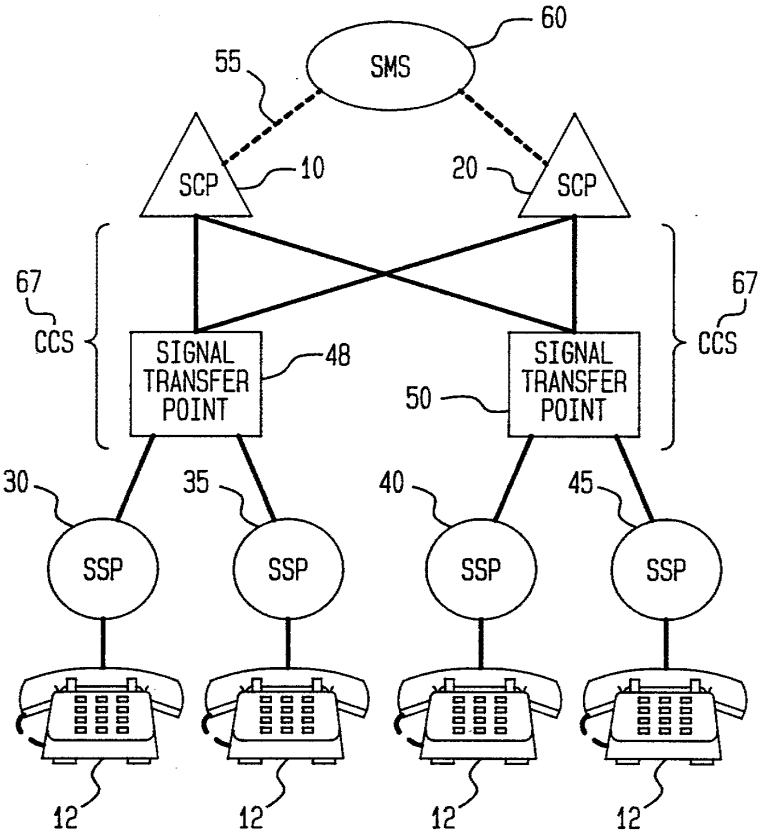

FIG. 2A

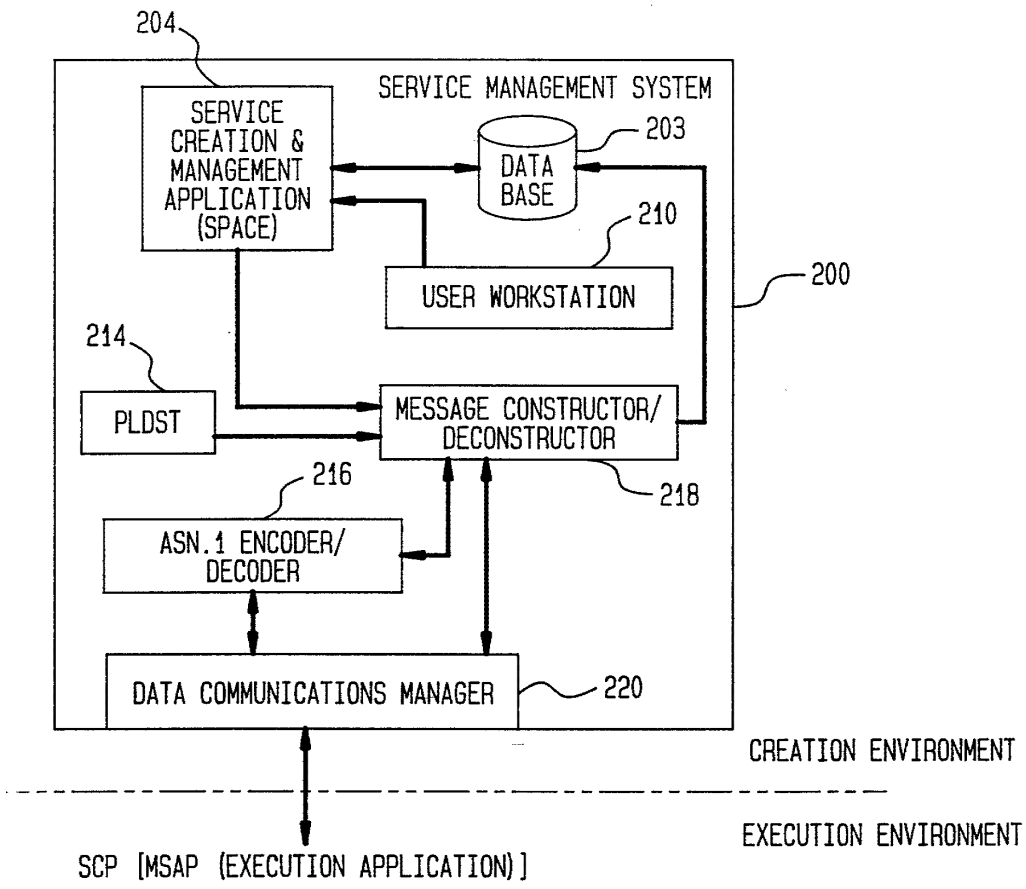
204
SERVICE MANAGEMENT SYSTEM
SERVICE CREATION & MANAGEMENT APPLICATION (SPACE)
DATA BASE
203
210
USER WORKSTATION
200
214
PLDST
MESSAGE CONSTRUCTOR/ DECONSTRUCTOR
218
216
ASN.1 ENCODER/ DECODER
DATA COMMUNICATIONS MANAGER
220
CREATION ENVIRONMENT
EXECUTION ENVIRONMENT
SCP [MSAP (EXECUTION APPLICATION)]

FIG. 2B

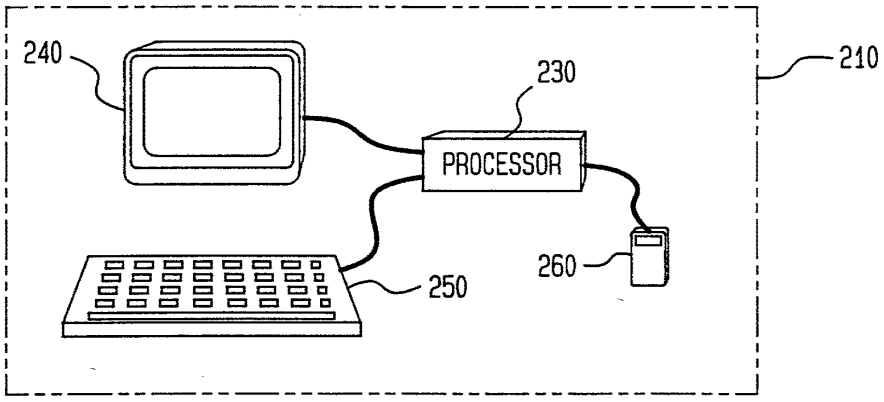
240
230
210
PROCESSOR
260
250

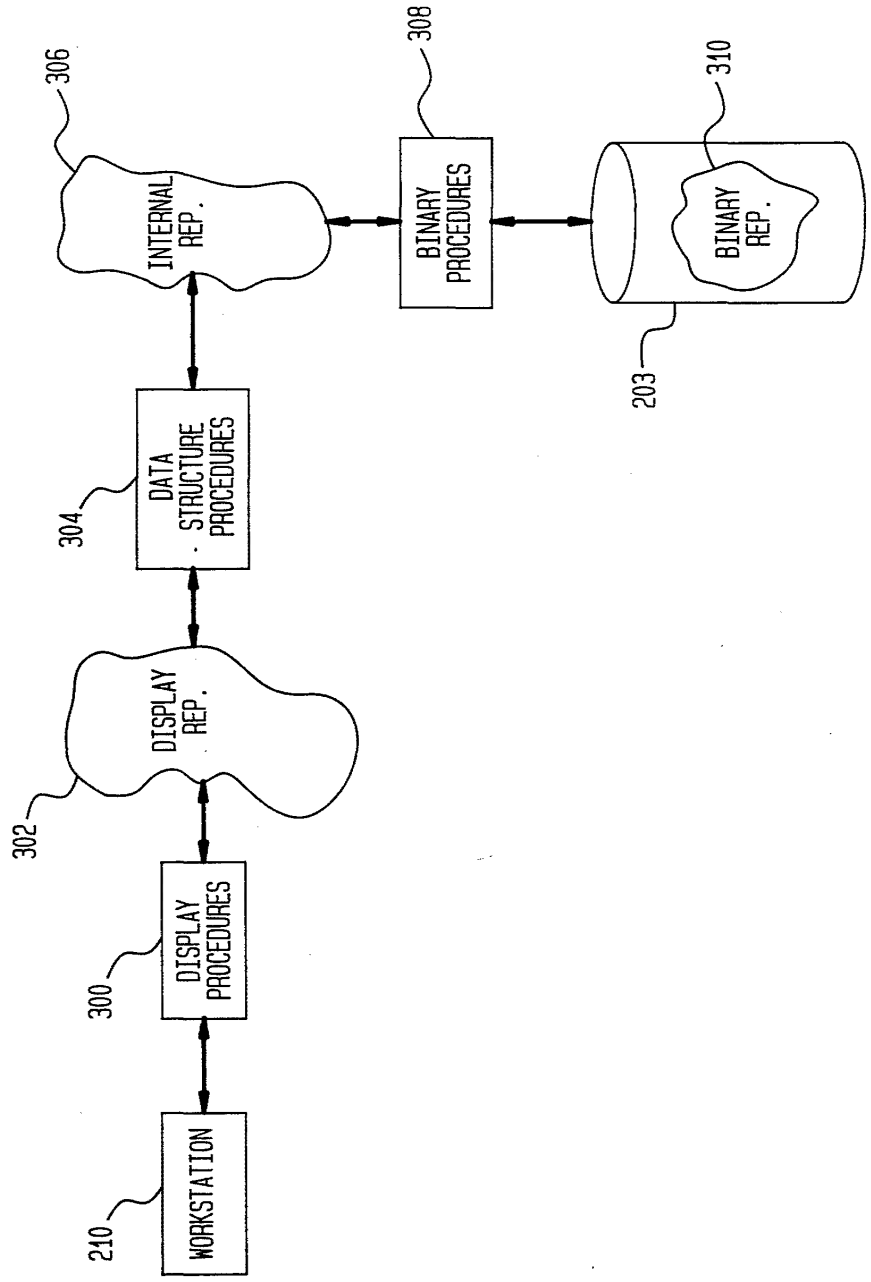

FIG. 3

Bright House Networks - Ex. 1108, Page 799

FIG. 4A

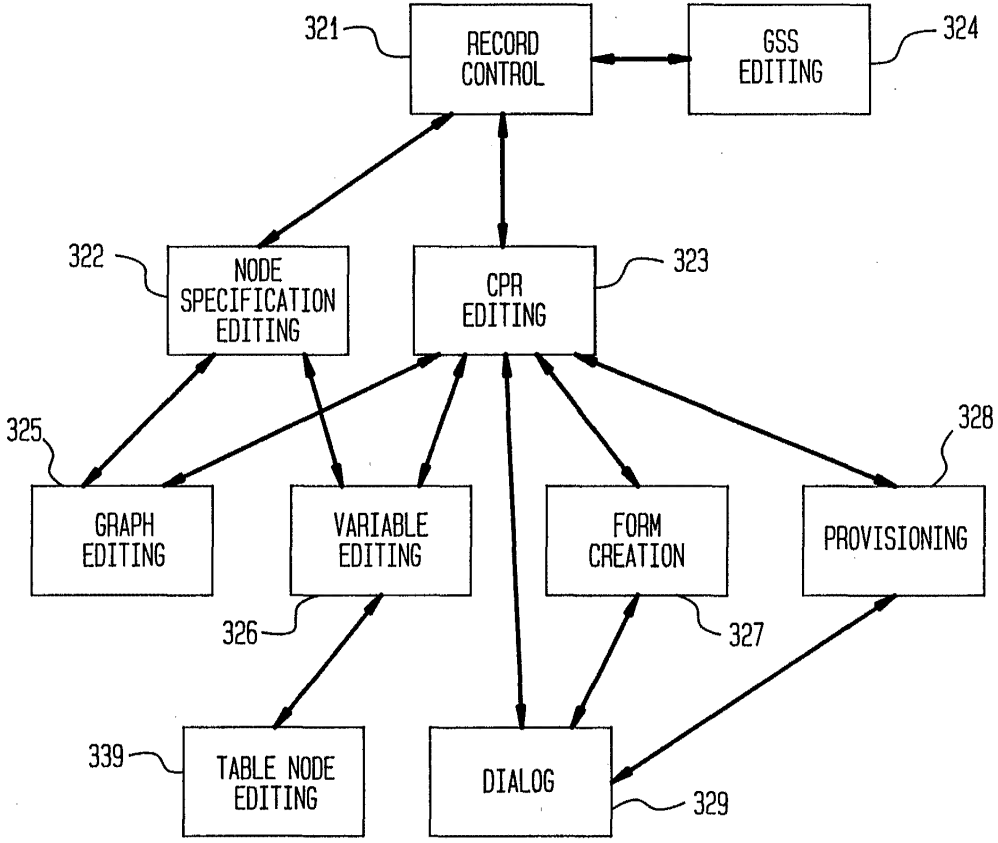
321
RECORD CONTROL
GSS EDITING
324
322
NODE SPECIFICATION EDITING
CPR EDITING
323
325
328
GRAPH EDITING
VARIABLE EDITING
FORM CREATION
PROVISIONING
326
327
339
TABLE NODE EDITING
DIALOG
329

FIG. 4B

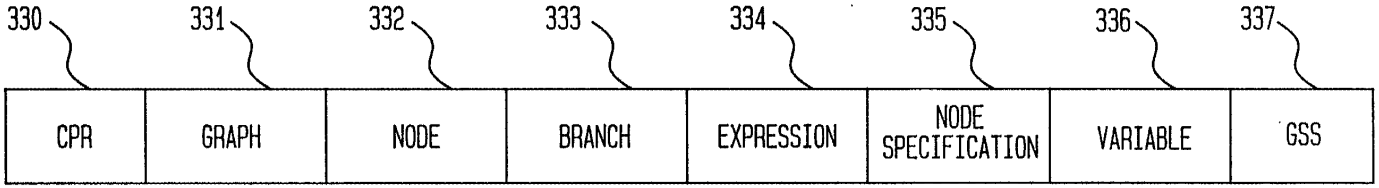
330
331
332
333
334
335
336
337
CPR
GRAPH
NODE
BRANCH
EXPRESSION
NODE SPECIFICATION
VARIABLE
GSS

FIG. 4C

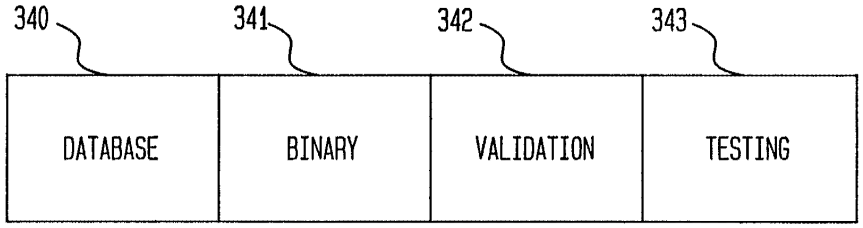
340
341
342
343
DATABASE
BINARY
VALIDATION
TESTING

FIG. 5

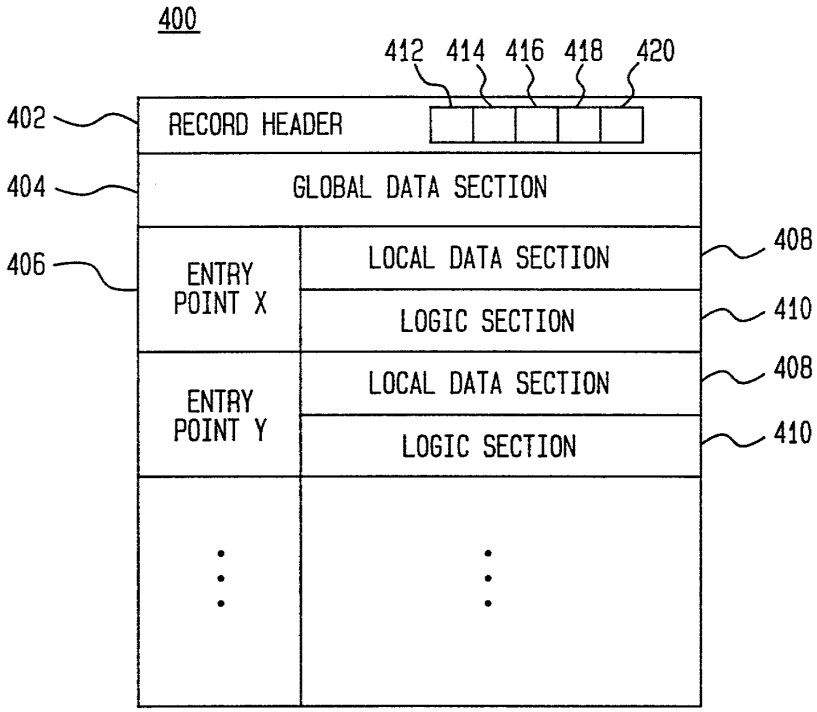
400
412
414
416
418
420
402
RECORD HEADER
404
GLOBAL DATA SECTION
406
ENTRY POINT X
LOCAL DATA SECTION
408
LOGIC SECTION
410
ENTRY POINT Y
LOCAL DATA SECTION
408
LOGIC SECTION
410

FIG. 6A

502 EXTENSION	504 TELEPHONE NUMBER
1002	(101) 555-1234
1004	(901) 555-5678
4069	(901) 501-5555

500

FIG. 6B

508 NAME	EXTENSION	TELEPHONE NUMBER
510 DATATYPE	NUMERIC STRING	TELEPHONE
512 MAXIMUM LENGTH	4	15
514 KEY	YES	NO

506

FIG. 6C

516 HEADER
506 TABLE SPECIFICATION
500 TABLE DATA

518

FIG. 7

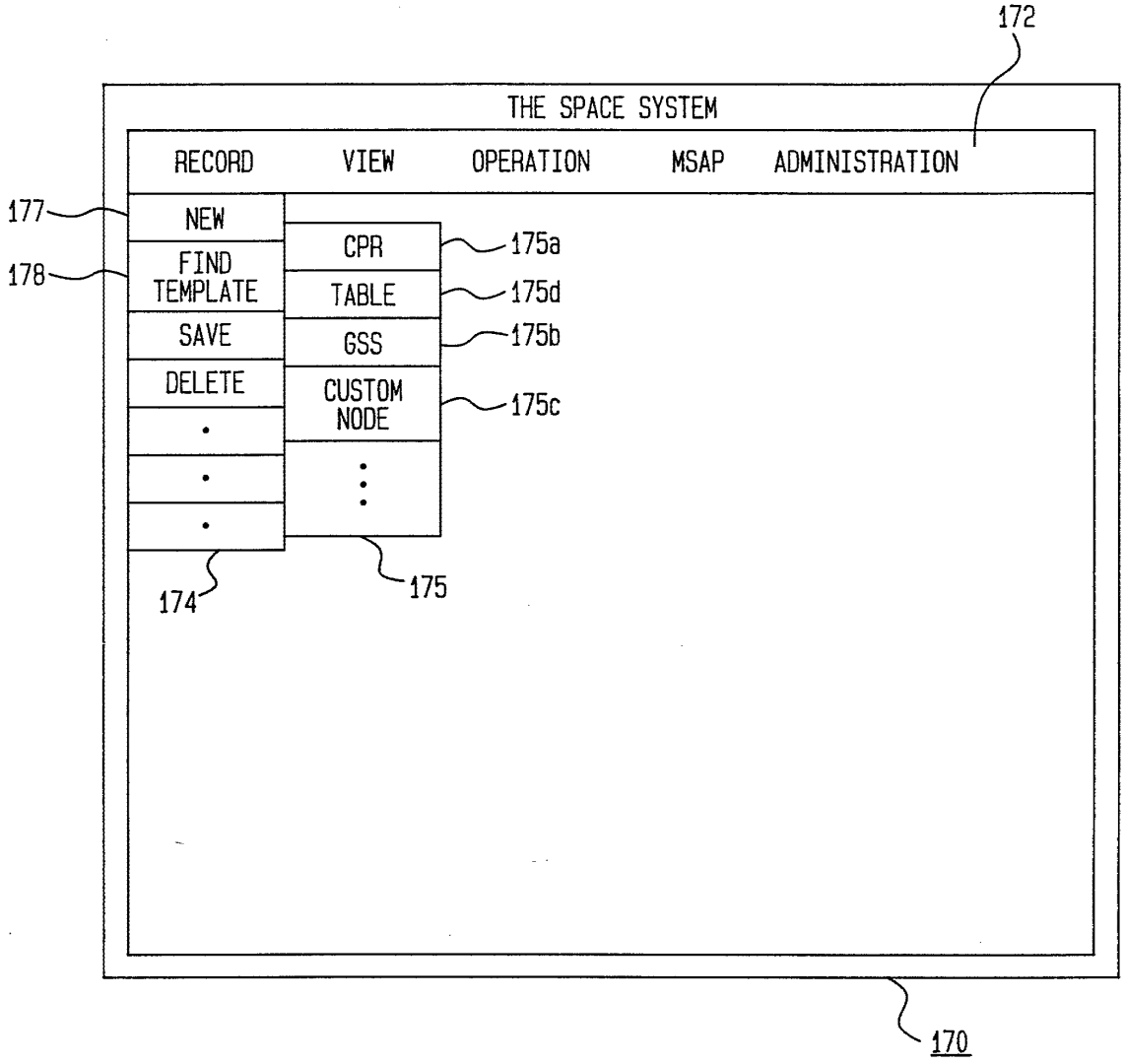
172
THE SPACE SYSTEM
RECORD
VIEW
OPERATION
MSAP
ADMINISTRATION
177
NEW
178
FIND TEMPLATE
SAVE
DELETE
CPR
TABLE
GSS
CUSTOM NODE
175a
175d
175b
175c
174
175
170

FIG. 8

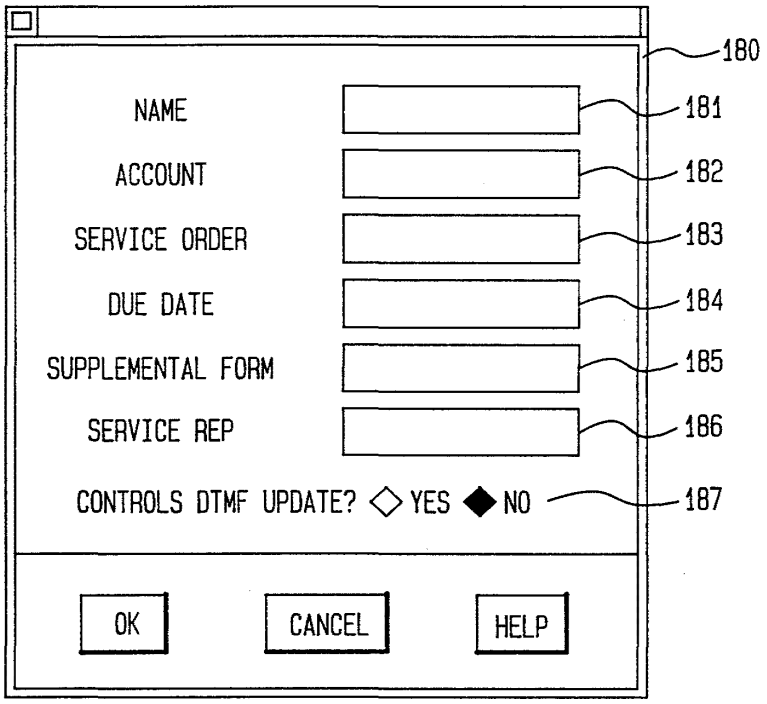
180
NAME
181
ACCOUNT
182
SERVICE ORDER
183
DUE DATE
184
SUPPLEMENTAL FORM
185
SERVICE REP
186
CONTROLS DTMF UPDATE? ◇ YES ◆ NO
187
OK
CANCEL
HELP

FIG. 9

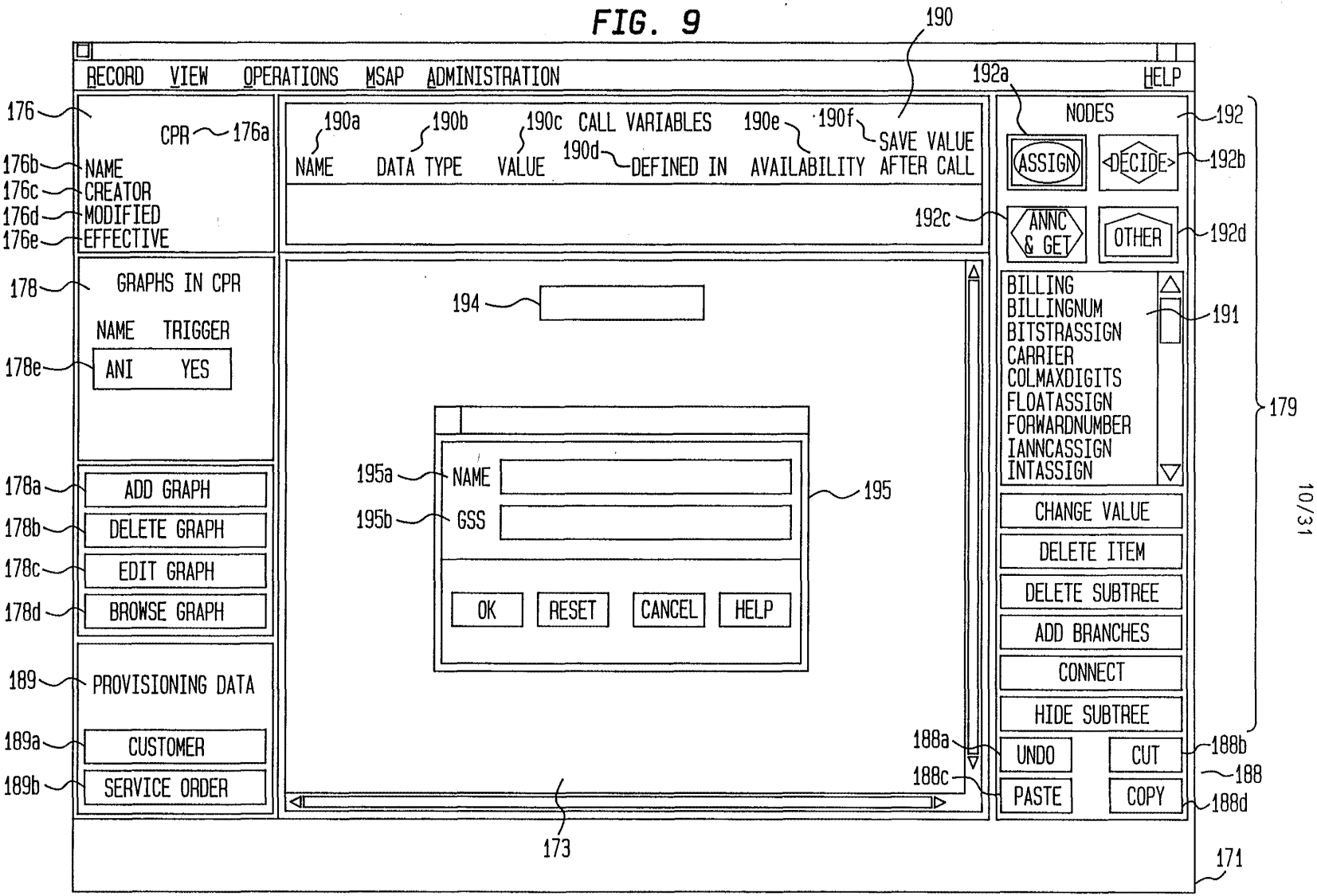
190
RECORD VIEW OPERATIONS MSAP ADMINISTRATION HELP
192a
176
CPR 176a
176b NAME
176c CREATOR
176d MODIFIED
176e EFFECTIVE
190a NAME
190b DATA TYPE
190c VALUE
CALL VARIABLES
190d DEFINED IN
190e AVAILABILITY
190f SAVE VALUE AFTER CALL
NODES 192
ASSIGN
DECIDE 192b
192c
ANNC & GET
OTHER 192d
178 GRAPHS IN CPR
NAME TRIGGER
178e ANI YES
194
BILLING
BILLINGNUM
BITSTRASSIGN
CARRIER
COLMAXDIGITS
FLOATASSIGN
FORWARDNUMBER
IANNCASSIGN
INTASSIGN
191
179
195a NAME
195b GSS
195
OK RESET CANCEL HELP
178a ADD GRAPH
178b DELETE GRAPH
178c EDIT GRAPH
178d BROWSE GRAPH
CHANGE VALUE
DELETE ITEM
DELETE SUBTREE
ADD BRANCHES
CONNECT
HIDE SUBTREE
189 PROVISIONING DATA
189a CUSTOMER
189b SERVICE ORDER
188a
188c
UNDO
CUT 188b
188
PASTE
COPY 188d
173
171

FIG. 10

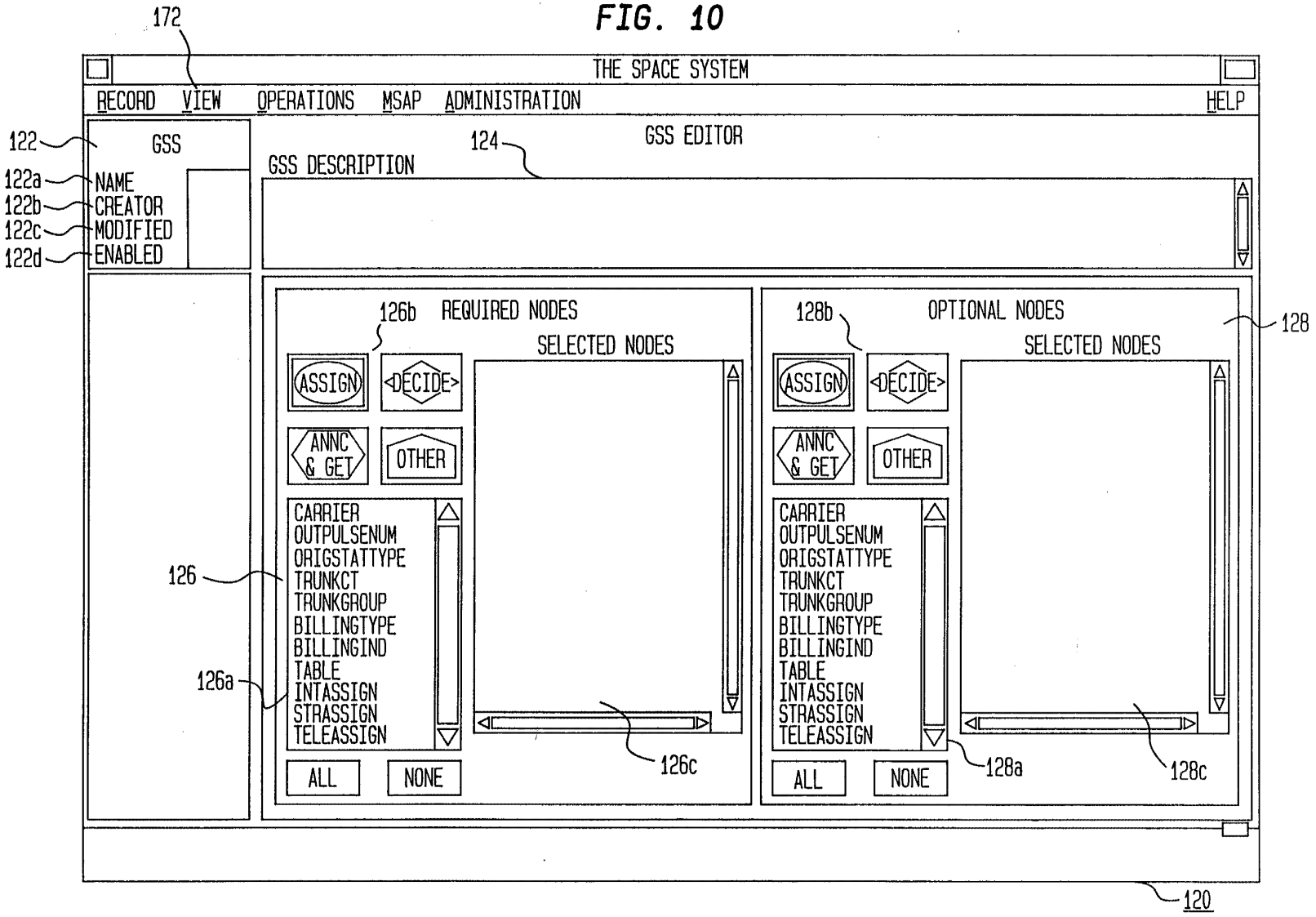
172
THE SPACE SYSTEM
RECORD
VIEW
OPERATIONS
MSAP
ADMINISTRATION
HELP
122
GSS
122a
NAME
122b
CREATOR
122c
MODIFIED
122d
ENABLED
124
GSS EDITOR
GSS DESCRIPTION
126b
REQUIRED NODES
SELECTED NODES
ASSIGN
DECIDE
ANNC & GET
OTHER
126
CARRIER
OUTPULSENUM
ORIGSTATTYPE
TRUNKCT
TRUNKGROUP
BILLINGTYPE
BILLINGIND
TABLE
INTASSIGN
STRASSIGN
TELEASSIGN
126a
ALL
NONE
126c
128b
OPTIONAL NODES
128
SELECTED NODES
ASSIGN
DECIDE
ANNC & GET
OTHER
CARRIER
OUTPULSENUM
ORIGSTATTYPE
TRUNKCT
TRUNKGROUP
BILLINGTYPE
BILLINGIND
TABLE
INTASSIGN
STRASSIGN
TELEASSIGN
ALL
NONE
128a
128c
120

FIG. 11

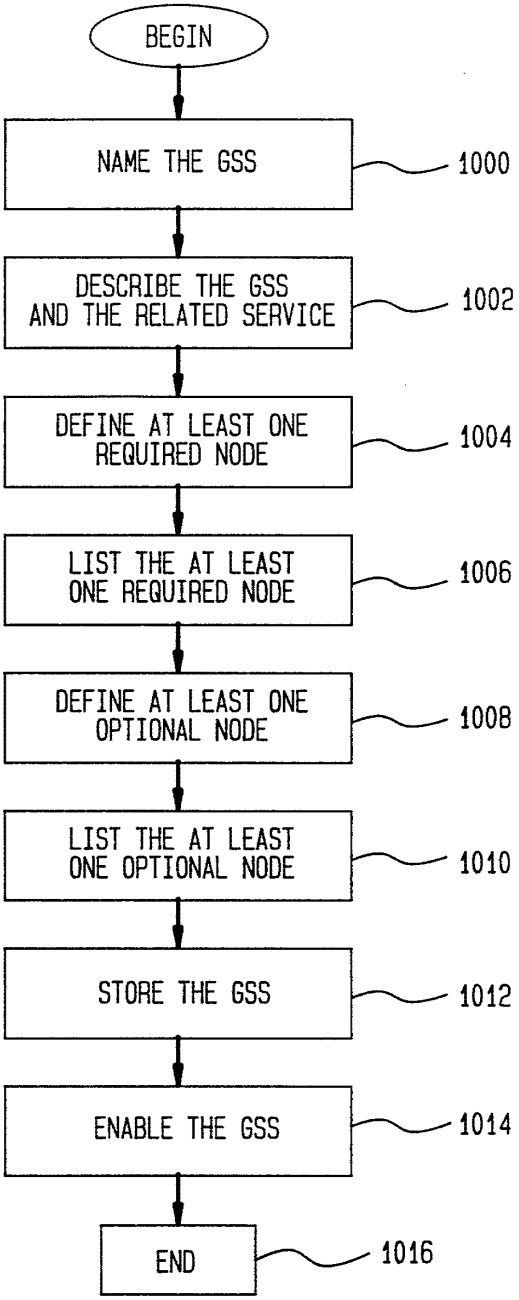
BEGIN
NAME THE GSS
1000
DESCRIBE THE GSS AND THE RELATED SERVICE
1002
DEFINE AT LEAST ONE REQUIRED NODE
1004
LIST THE AT LEAST ONE REQUIRED NODE
1006
DEFINE AT LEAST ONE OPTIONAL NODE
1008
LIST THE AT LEAST ONE OPTIONAL NODE
1010
STORE THE GSS
1012
ENABLE THE GSS
1014
END
1016

FIG. 12

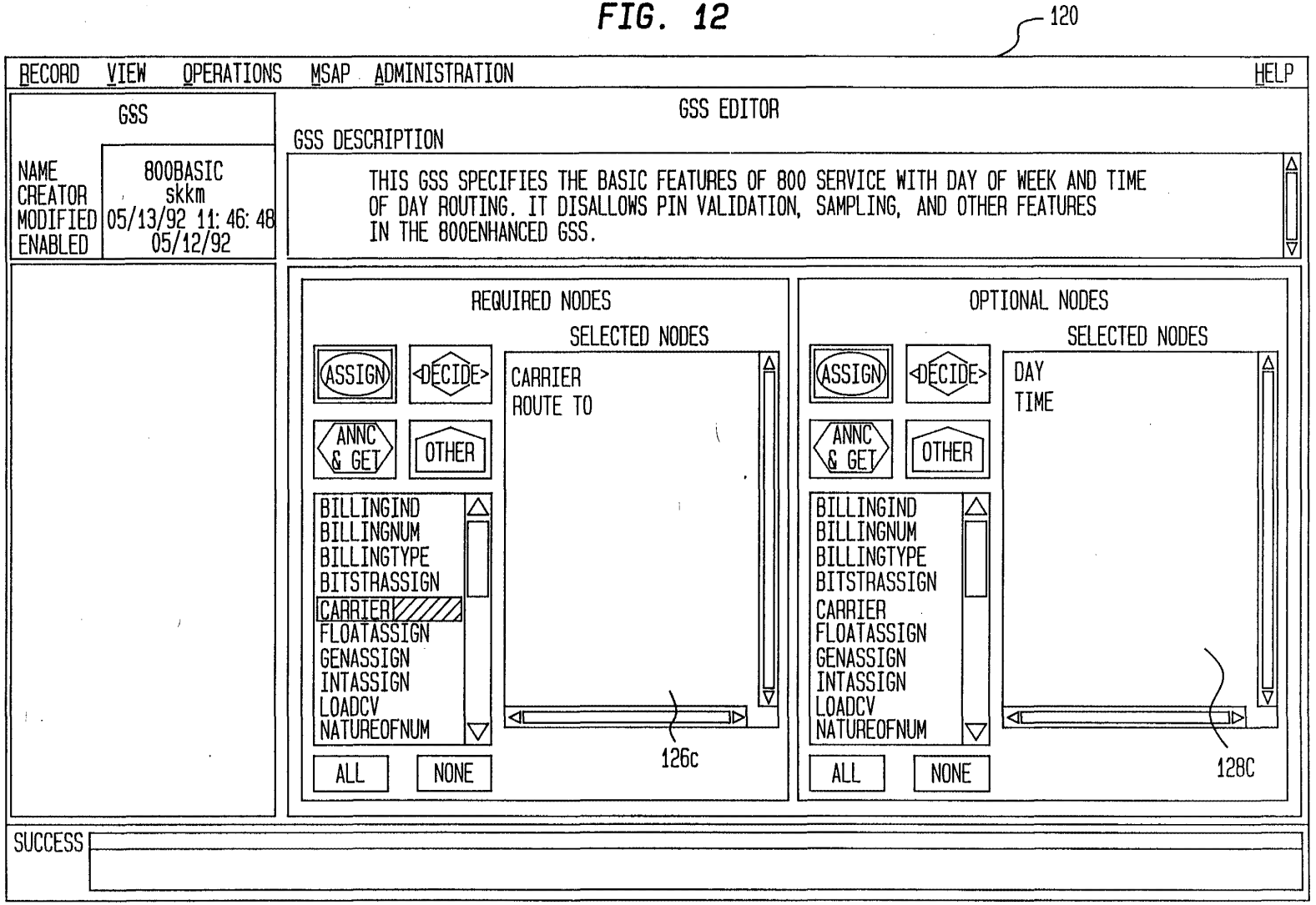
120
RECORD VIEW OPERATIONS MSAP ADMINISTRATION HELP
GSS
NAME 800BASIC
CREATOR skkm
MODIFIED 05/13/92 11:46:48
ENABLED 05/12/92
GSS EDITOR
GSS DESCRIPTION
THIS GSS SPECIFIES THE BASIC FEATURES OF 800 SERVICE WITH DAY OF WEEK AND TIME OF DAY ROUTING. IT DISALLOWS PIN VALIDATION, SAMPLING, AND OTHER FEATURES IN THE 800ENHANCED GSS.
REQUIRED NODES
SELECTED NODES
ASSIGN
DECIDE
ANNC & GET
OTHER
BILLINGIND
BILLINGNUM
BILLINGTYPE
BITSTRASSIGN
CARRIER
FLOATASSIGN
GENASSIGN
INTASSIGN
LOADCV
NATUREOFNUM
CARRIER
ROUTE TO
126c
ALL
NONE
OPTIONAL NODES
SELECTED NODES
ASSIGN
DECIDE
ANNC & GET
OTHER
BILLINGIND
BILLINGNUM
BILLINGTYPE
BITSTRASSIGN
CARRIER
FLOATASSIGN
GENASSIGN
INTASSIGN
LOADCV
NATUREOFNUM
DAY
TIME
128C
ALL
NONE
SUCCESS

FIG. 13A

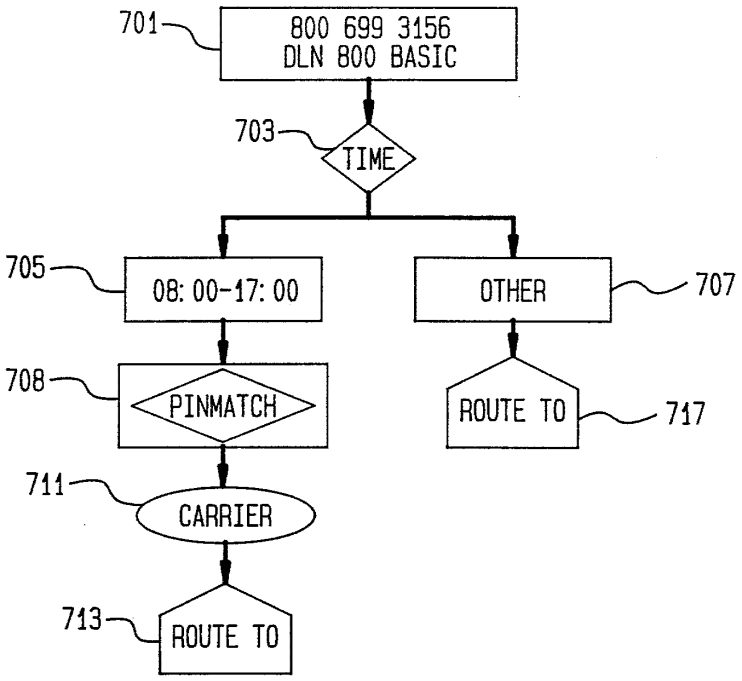

FIG. 13B

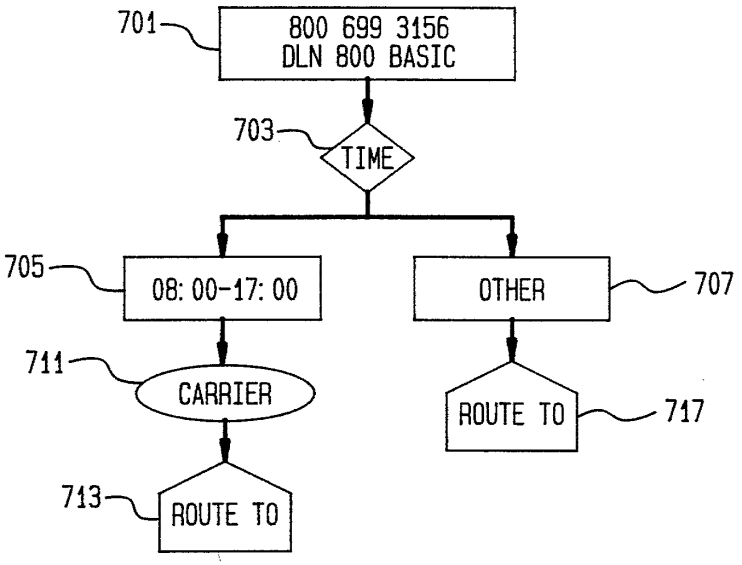

FIG. 14

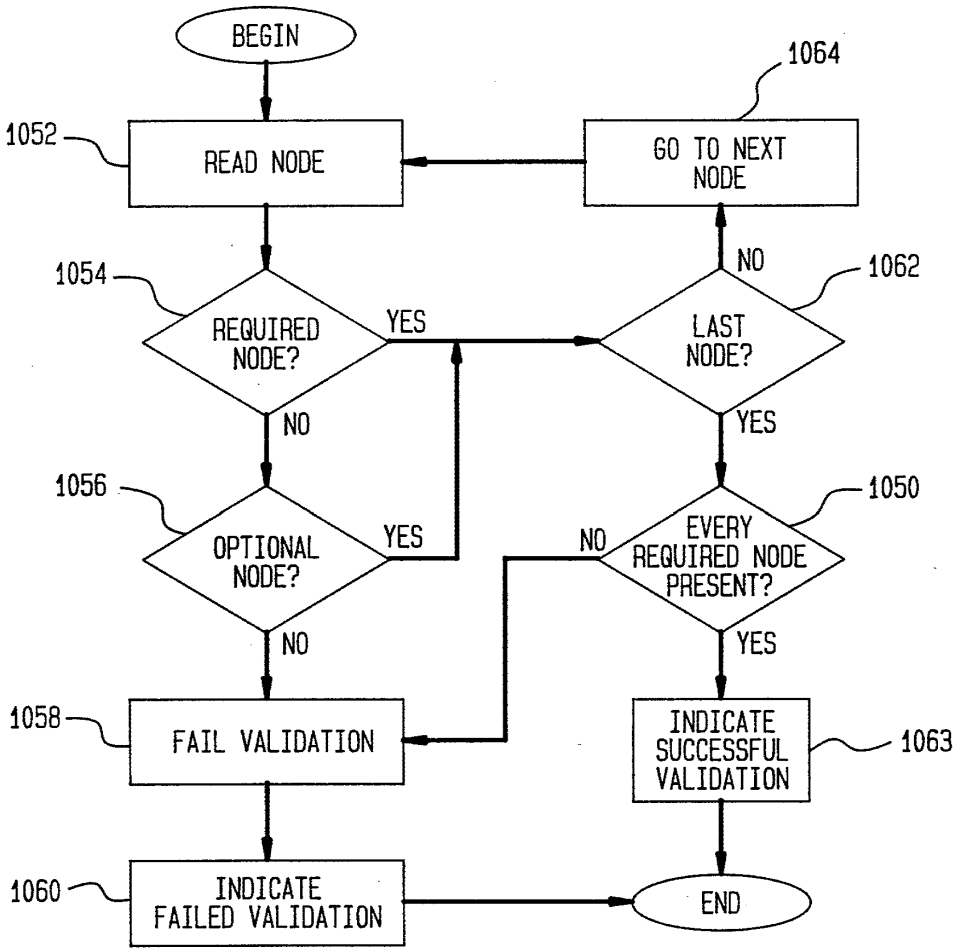
BEGIN
1052
READ NODE
1054
REQUIRED NODE?
YES
NO
1056
OPTIONAL NODE?
YES
NO
1058
FAIL VALIDATION
1060
INDICATE FAILED VALIDATION
1064
GO TO NEXT NODE
NO
1062
LAST NODE?
YES
1050
EVERY REQUIRED NODE PRESENT?
NO
YES
INDICATE SUCCESSFUL VALIDATION
1063
END

FIG. 15

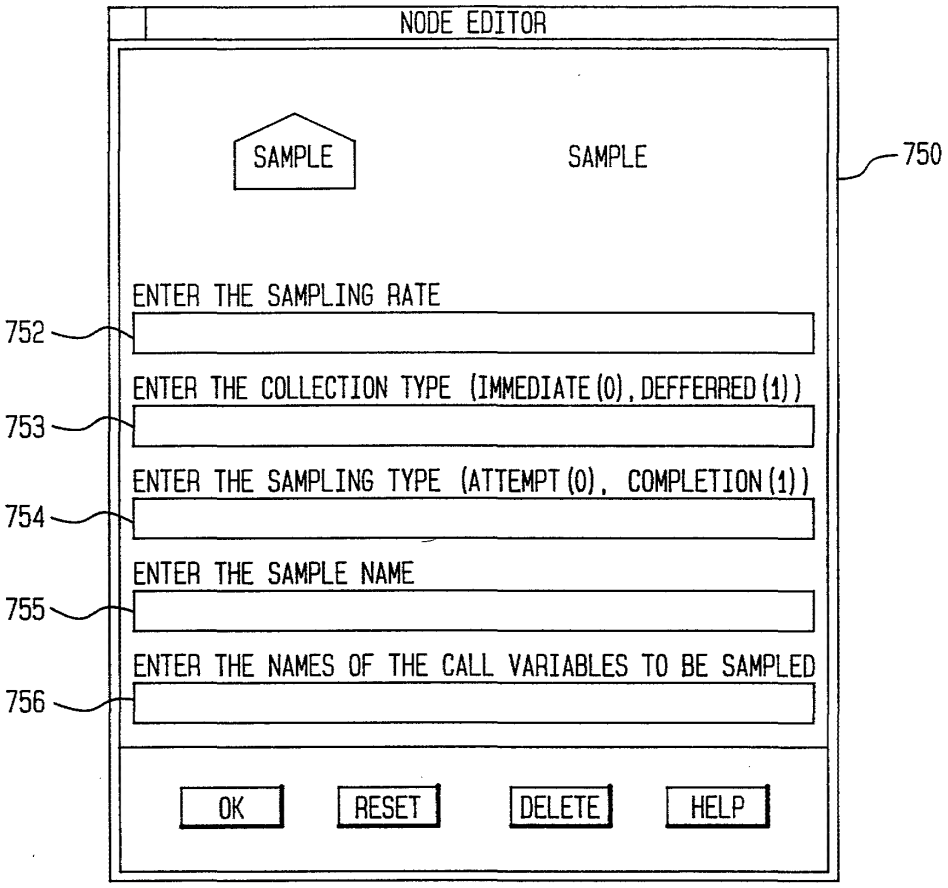
NODE EDITOR
SAMPLE
SAMPLE
750
ENTER THE SAMPLING RATE
752
ENTER THE COLLECTION TYPE (IMMEDIATE(0), DEFFERRED(1))
753
ENTER THE SAMPLING TYPE (ATTEMPT(0), COMPLETION(1))
754
ENTER THE SAMPLE NAME
755
ENTER THE NAMES OF THE CALL VARIABLES TO BE SAMPLED
756
OK
RESET
DELETE
HELP

FIG. 16

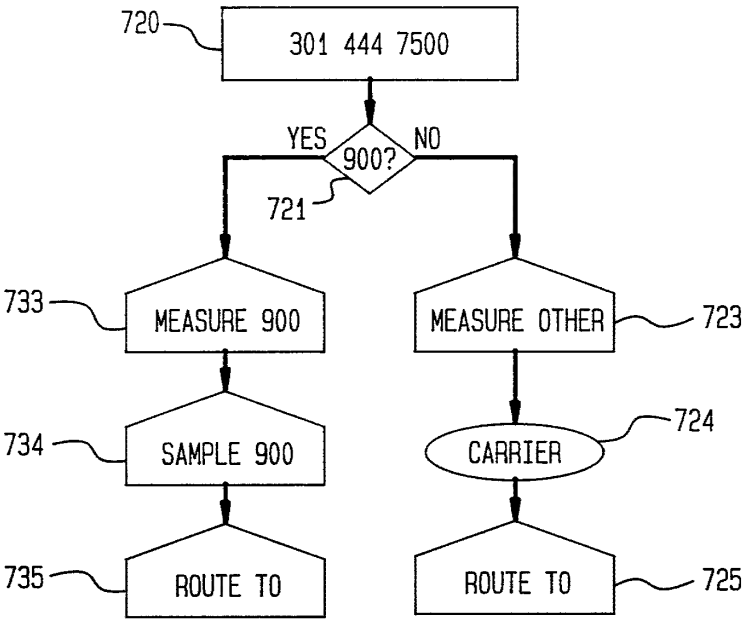
720
301 444 7500
YES
900?
NO
721
733
MEASURE 900
MEASURE OTHER
723
734
SAMPLE 900
CARRIER
724
735
ROUTE TO
ROUTE TO
725

FIG. 17

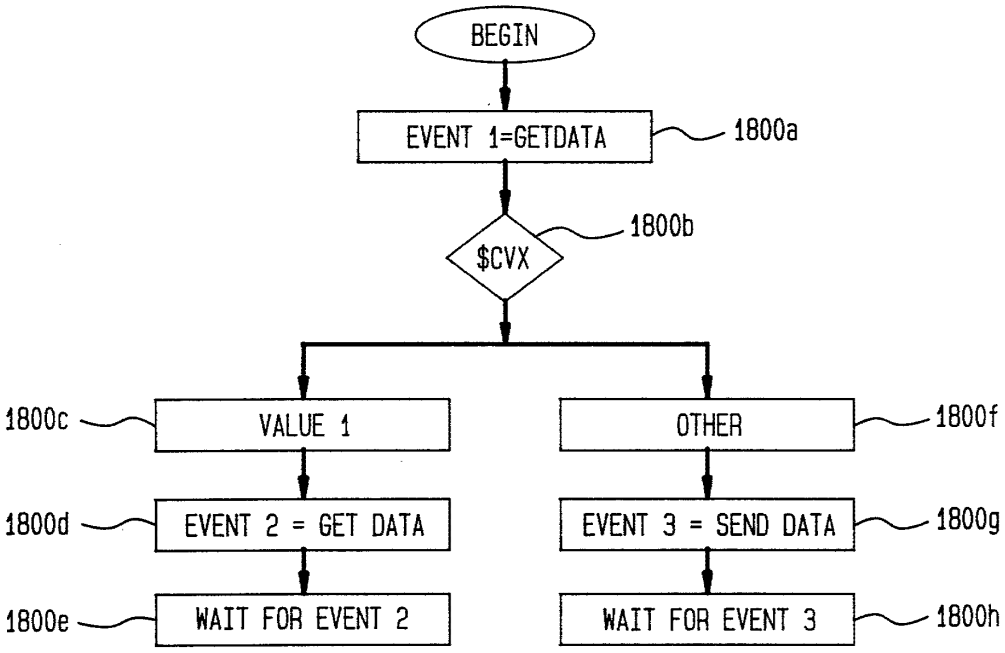
BEGIN
EVENT 1=GETDATA
1800a
$CVX
1800b
1800c
VALUE 1
OTHER
1800f
1800d
EVENT 2 = GET DATA
EVENT 3 = SEND DATA
1800g
1800e
WAIT FOR EVENT 2
WAIT FOR EVENT 3
1800h

FIG. 18

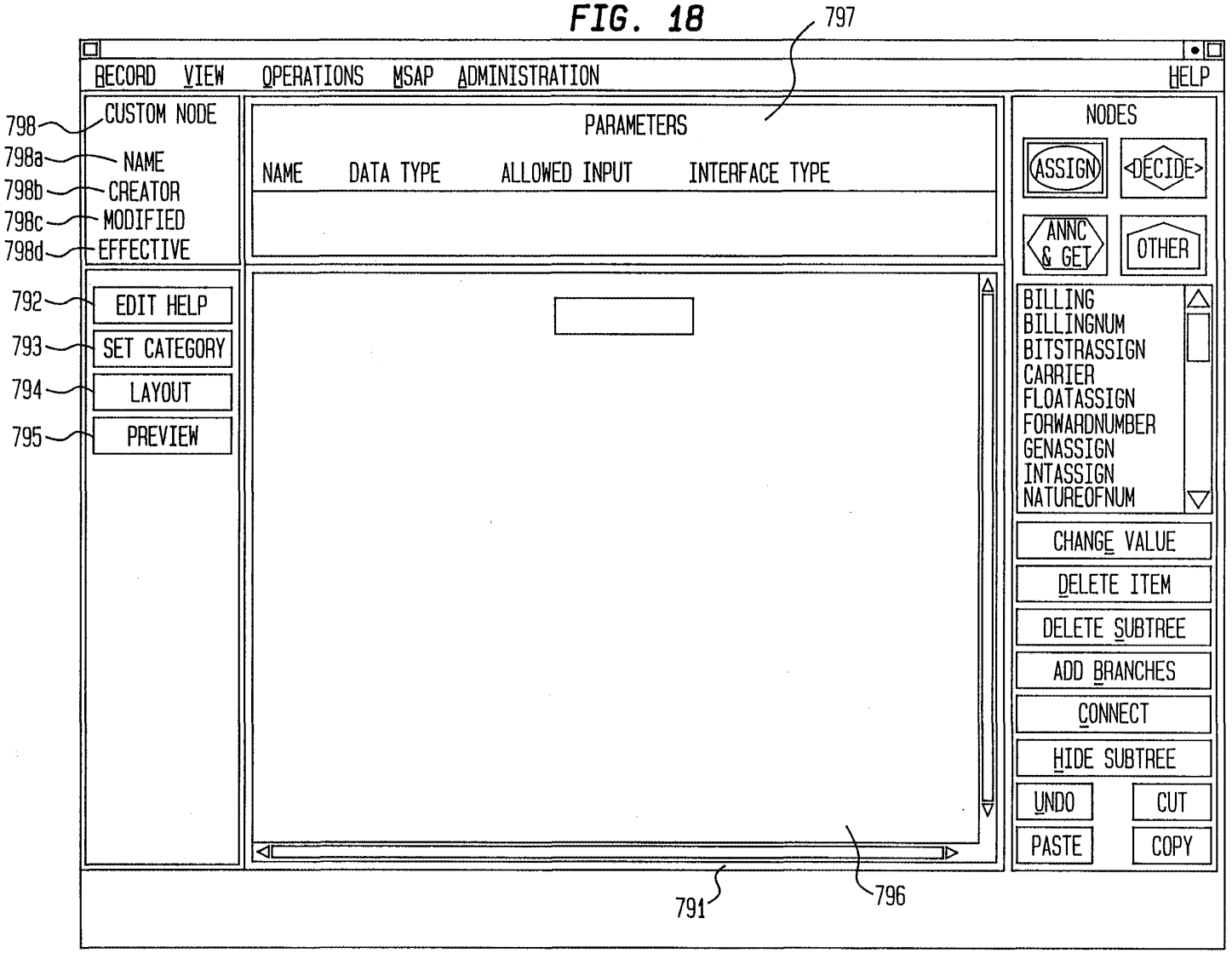
797
RECORD VIEW OPERATIONS MSAP ADMINISTRATION HELP
798 CUSTOM NODE
798a NAME
798b CREATOR
798c MODIFIED
798d EFFECTIVE
PARAMETERS
NAME DATA TYPE ALLOWED INPUT INTERFACE TYPE
NODES
ASSIGN
DECIDE
ANNC & GET
OTHER
792 EDIT HELP
793 SET CATEGORY
794 LAYOUT
795 PREVIEW
BILLING
BILLINGNUM
BITSTRASSIGN
CARRIER
FLOATASSIGN
FORWARDNUMBER
GENASSIGN
INTASSIGN
NATUREOFNUM
CHANGE VALUE
DELETE ITEM
DELETE SUBTREE
ADD BRANCHES
CONNECT
HIDE SUBTREE
UNDO
CUT
PASTE
COPY
791
796

FIG. 19A

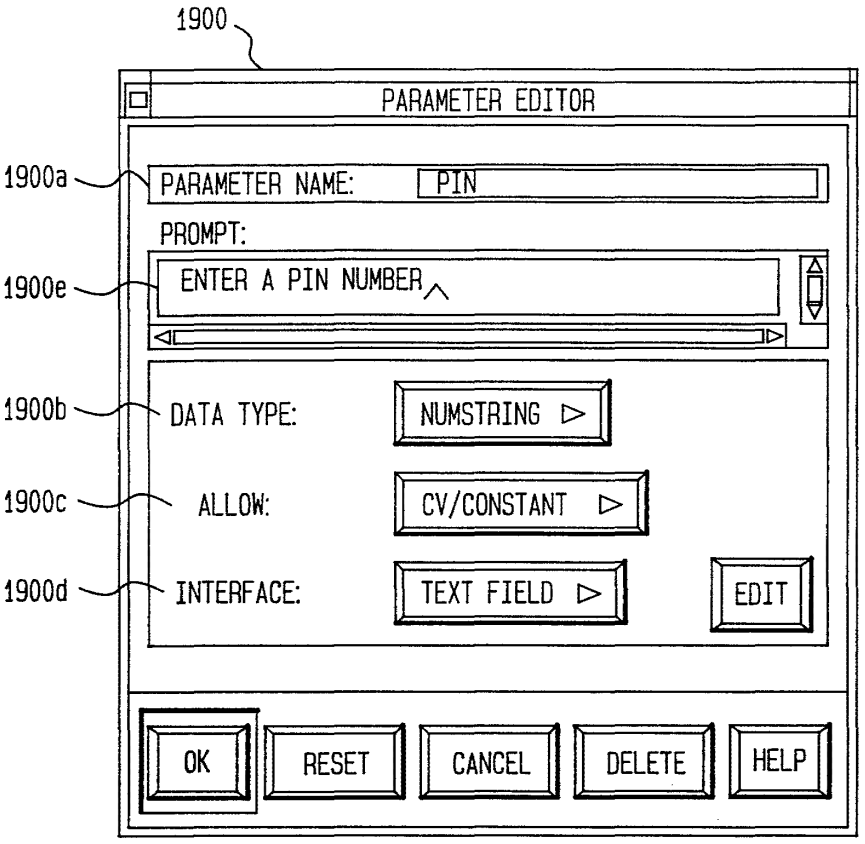

FIG. 19B

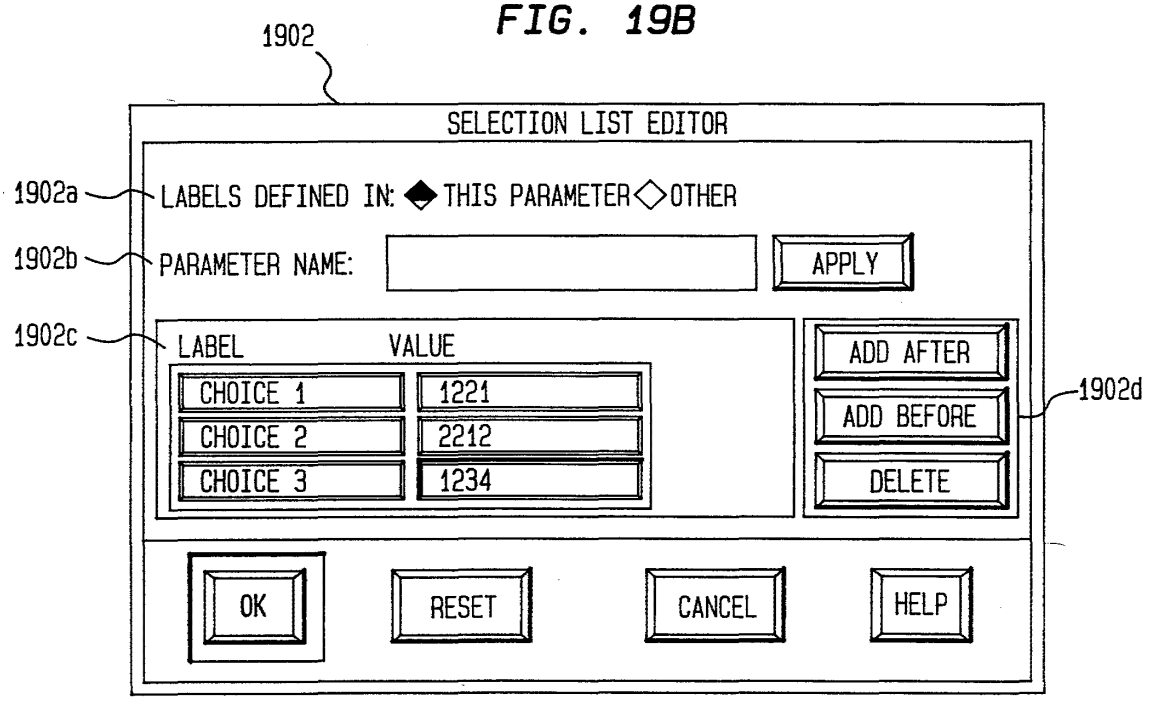

FIG. 20

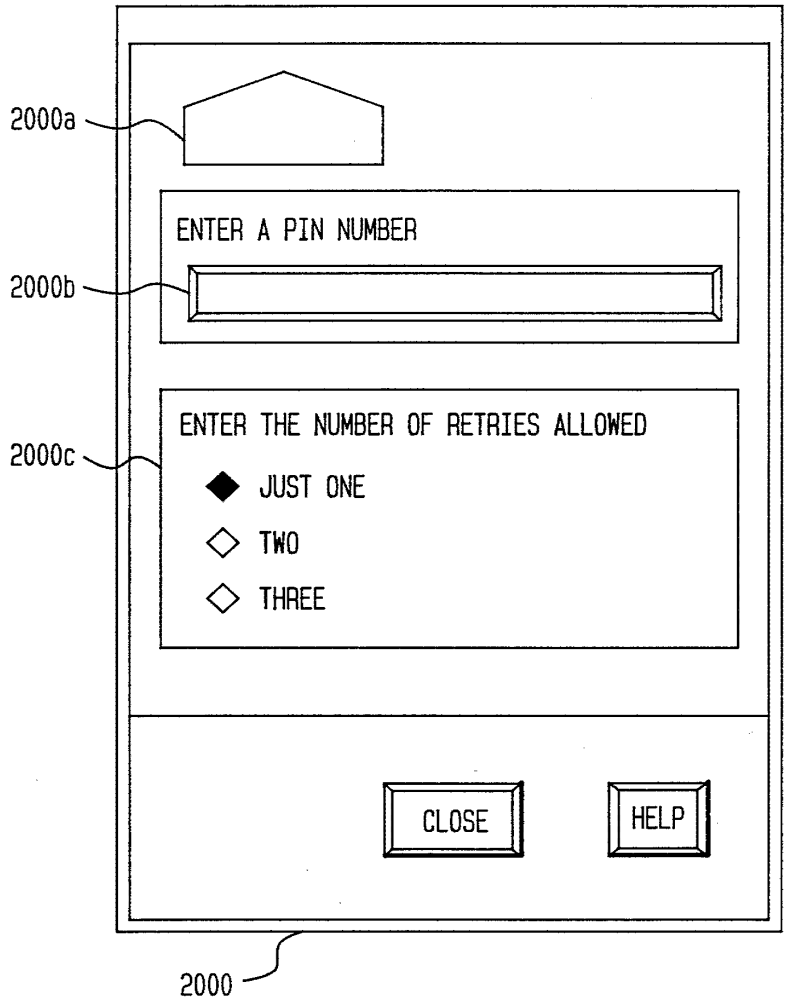
2000a
ENTER A PIN NUMBER
2000b
ENTER THE NUMBER OF RETRIES ALLOWED
2000c
JUST ONE
TWO
THREE
CLOSE
HELP
2000

FIG. 21

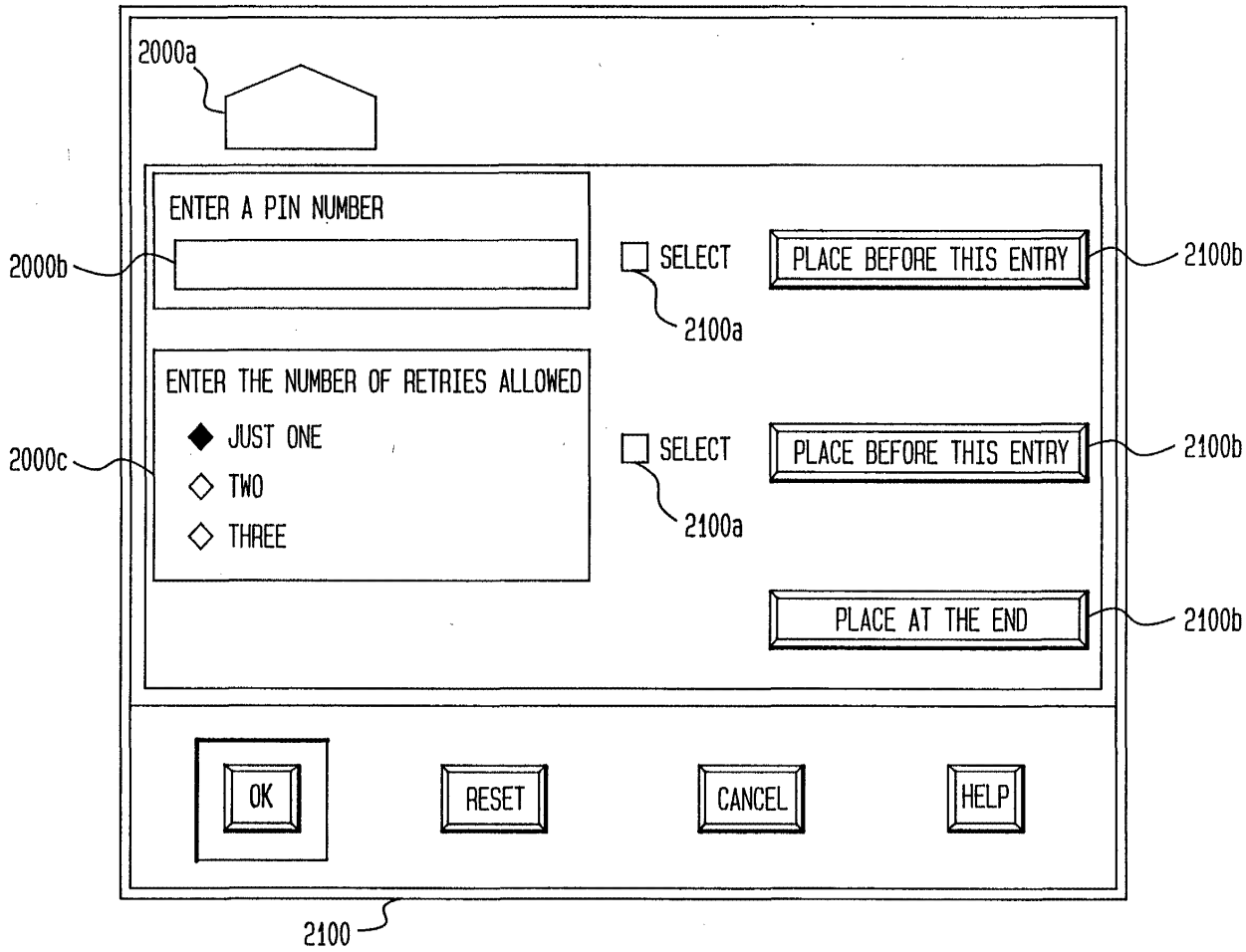
2000a
ENTER A PIN NUMBER
2000b
SELECT
PLACE BEFORE THIS ENTRY
2100b
2100a
ENTER THE NUMBER OF RETRIES ALLOWED
2000c
JUST ONE
TWO
THREE
SELECT
PLACE BEFORE THIS ENTRY
2100b
2100a
PLACE AT THE END
2100b
OK
RESET
CANCEL
HELP
2100

FIG. 22

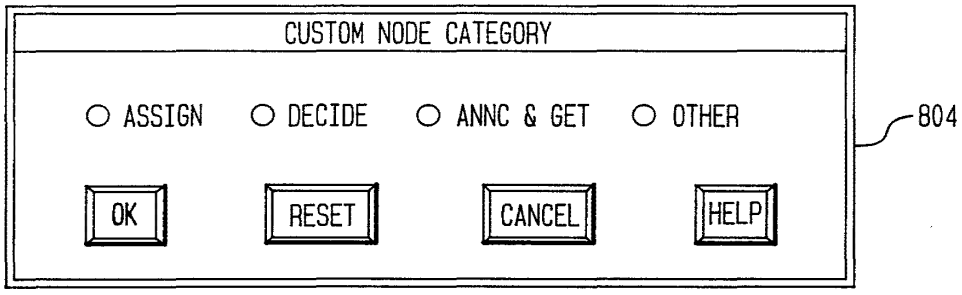

FIG. 23

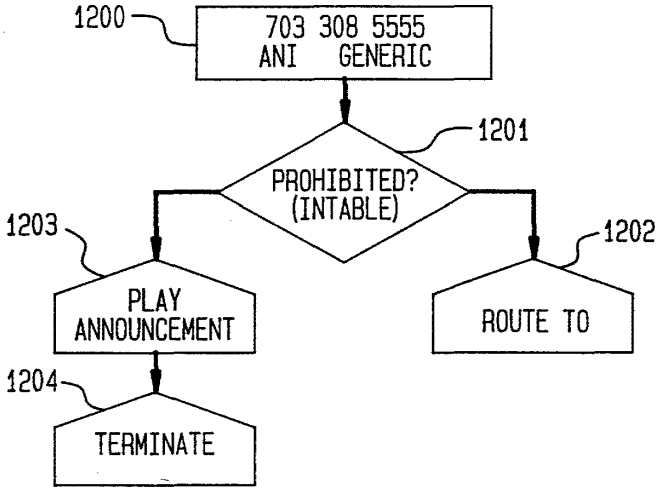

FIG. 24

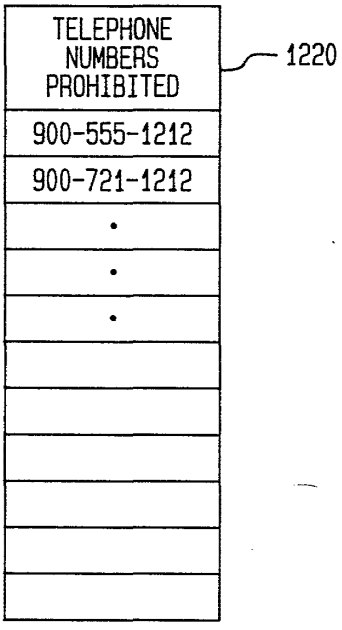

FIG. 25

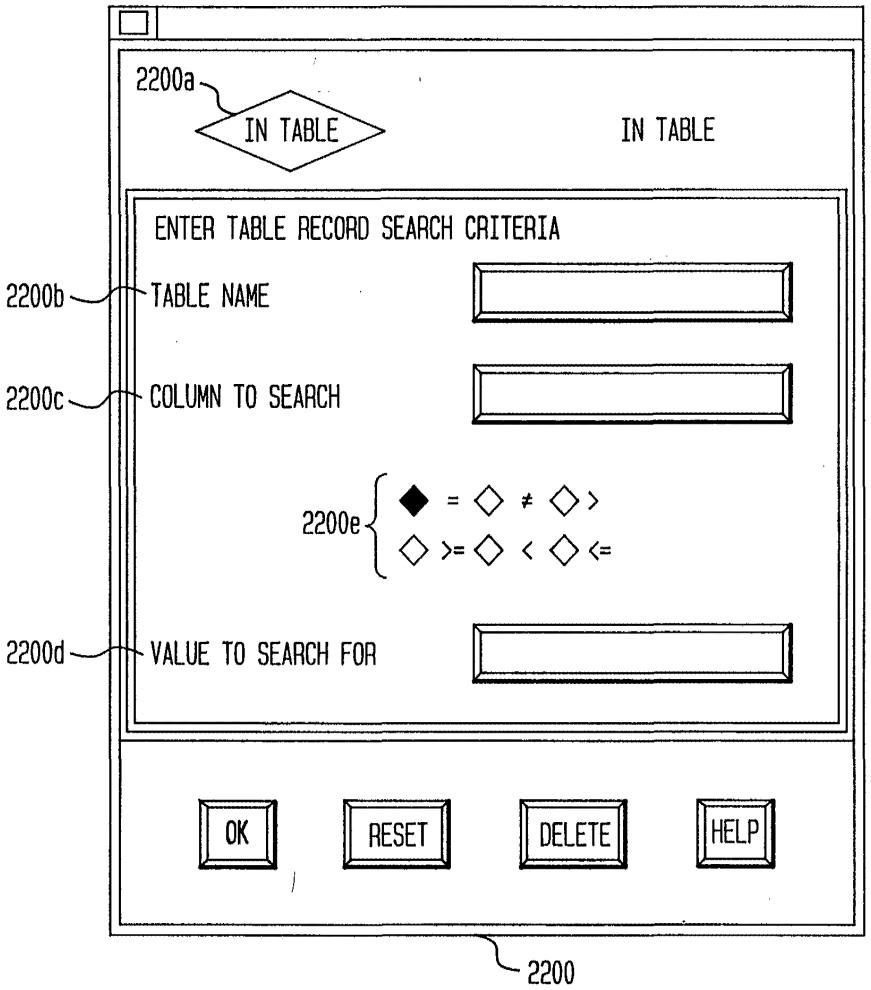
2200a
IN TABLE
IN TABLE
ENTER TABLE RECORD SEARCH CRITERIA
2200b
TABLE NAME
2200c
COLUMN TO SEARCH
2200e
= ≠ >
>= < <=
2200d
VALUE TO SEARCH FOR
OK
RESET
DELETE
HELP
2200

FIG. 26

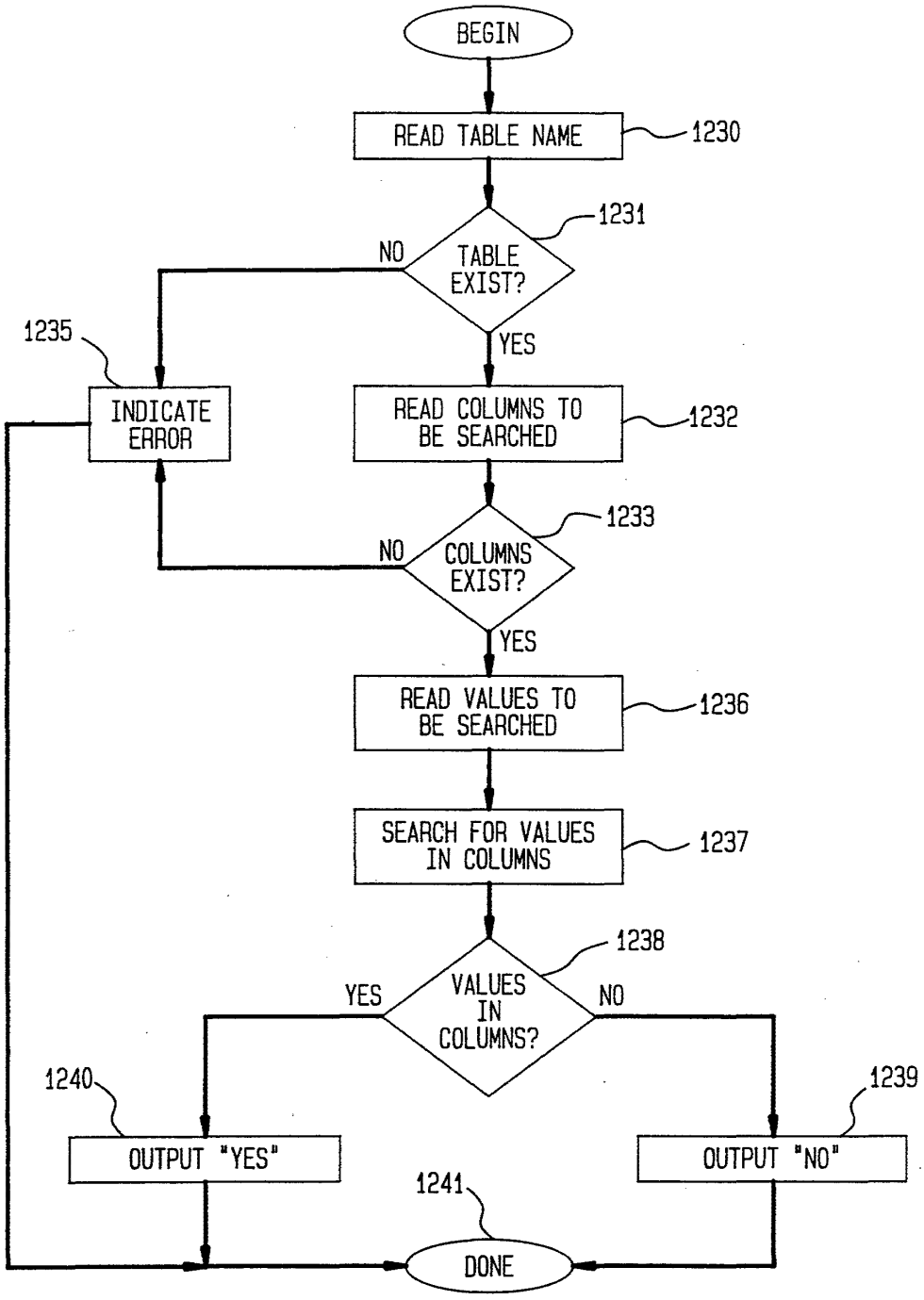
BEGIN
READ TABLE NAME
1230
1231
TABLE EXIST?
NO
YES
1235
INDICATE ERROR
READ COLUMNS TO BE SEARCHED
1232
1233
COLUMNS EXIST?
NO
YES
READ VALUES TO BE SEARCHED
1236
SEARCH FOR VALUES IN COLUMNS
1237
1238
VALUES IN COLUMNS?
YES
NO
1240
OUTPUT "YES"
1239
OUTPUT "NO"
1241
DONE

FIG. 27

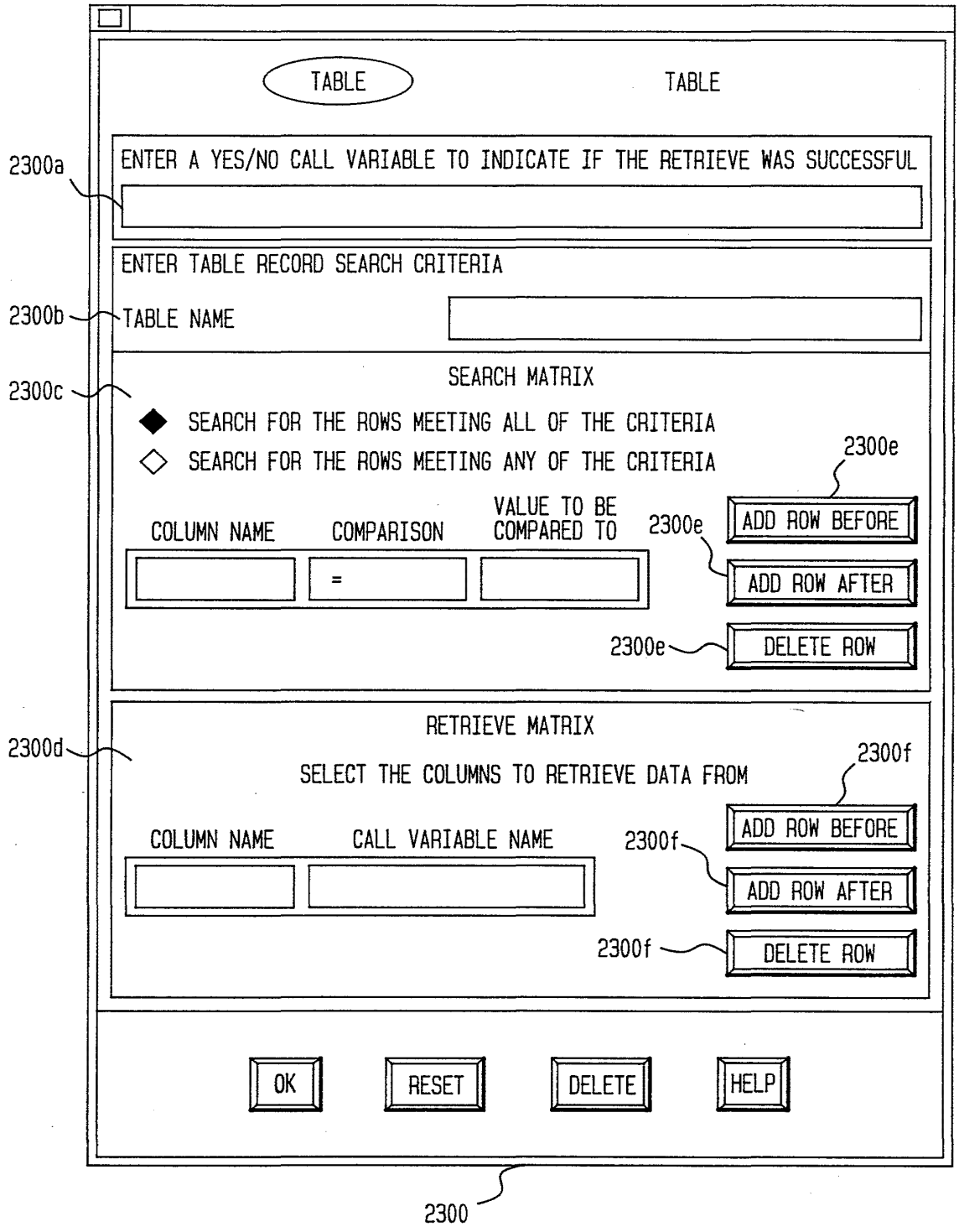
TABLE
TABLE
2300a
ENTER A YES/NO CALL VARIABLE TO INDICATE IF THE RETRIEVE WAS SUCCESSFUL
ENTER TABLE RECORD SEARCH CRITERIA
2300b
TABLE NAME
2300c
SEARCH MATRIX
SEARCH FOR THE ROWS MEETING ALL OF THE CRITERIA
SEARCH FOR THE ROWS MEETING ANY OF THE CRITERIA
2300e
COLUMN NAME
COMPARISON
VALUE TO BE COMPARED TO
=
2300e
ADD ROW BEFORE
ADD ROW AFTER
2300e
DELETE ROW
2300d
RETRIEVE MATRIX
SELECT THE COLUMNS TO RETRIEVE DATA FROM
2300f
COLUMN NAME
CALL VARIABLE NAME
2300f
ADD ROW BEFORE
ADD ROW AFTER
2300f
DELETE ROW
OK
RESET
DELETE
HELP
2300

FIG. 28

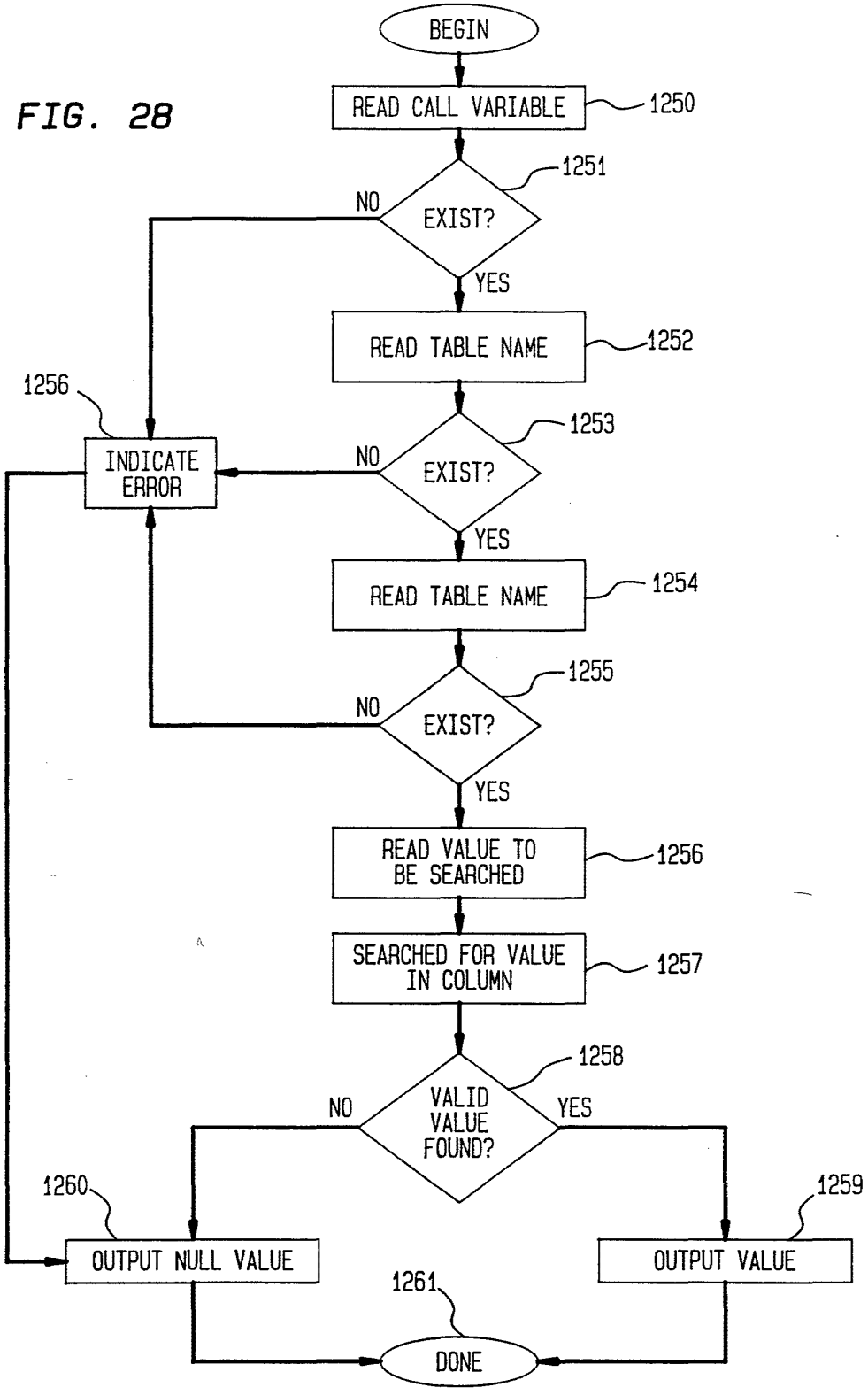
BEGIN
READ CALL VARIABLE
1250
1251
EXIST?
NO
YES
READ TABLE NAME
1252
1256
1253
INDICATE ERROR
EXIST?
NO
YES
READ TABLE NAME
1254
1255
EXIST?
NO
YES
READ VALUE TO BE SEARCHED
1256
SEARCHED FOR VALUE IN COLUMN
1257
1258
VALID VALUE FOUND?
NO
YES
1260
1259
OUTPUT NULL VALUE
OUTPUT VALUE
1261
DONE

FIG. 29A

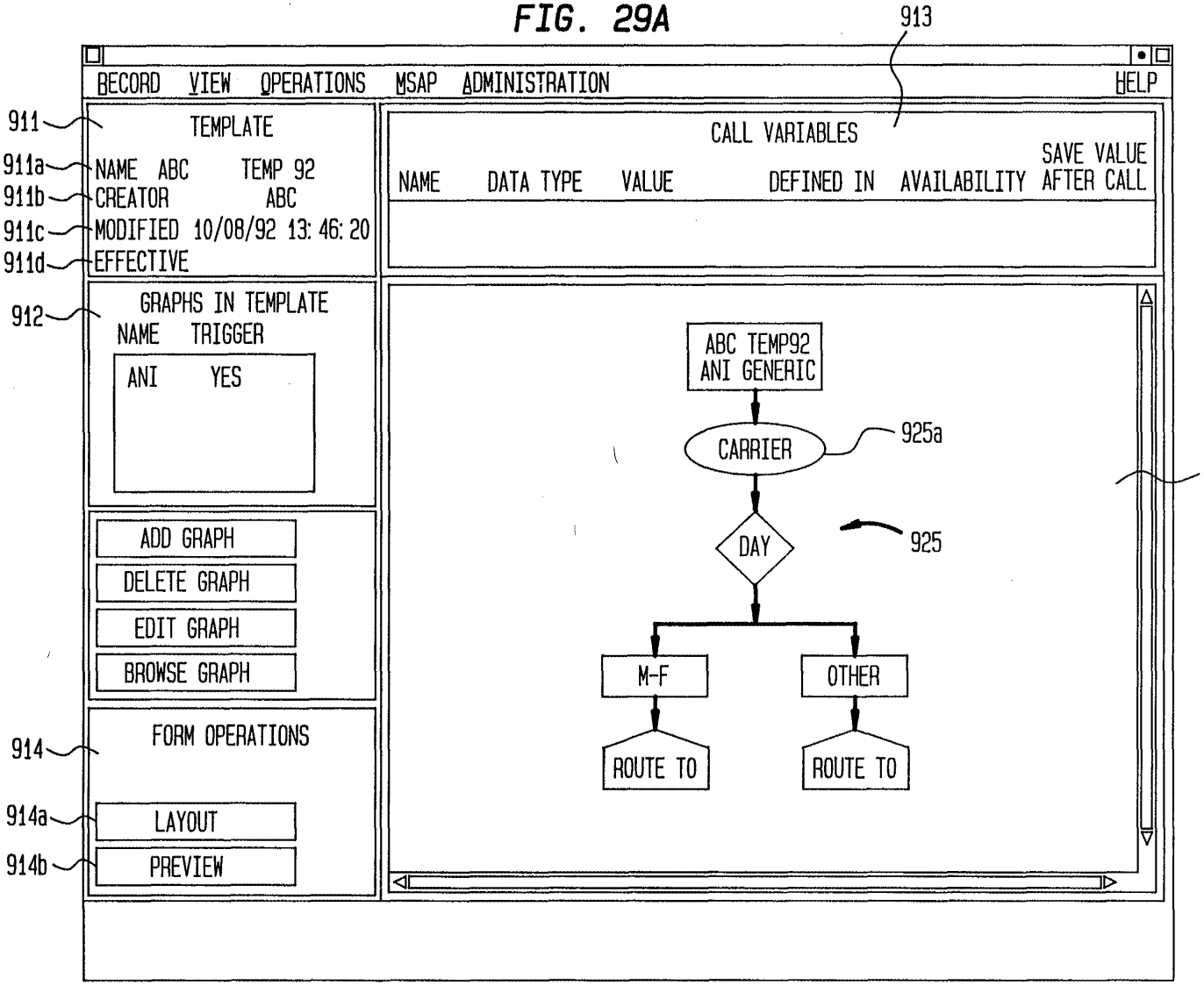
913
RECORD VIEW OPERATIONS MSAP ADMINISTRATION HELP
911
TEMPLATE
911a NAME ABC TEMP 92
911b CREATOR ABC
911c MODIFIED 10/08/92 13:46:20
911d EFFECTIVE
CALL VARIABLES
NAME DATA TYPE VALUE DEFINED IN AVAILABILITY SAVE VALUE AFTER CALL
912
GRAPHS IN TEMPLATE
NAME TRIGGER
ANI YES
ADD GRAPH
DELETE GRAPH
EDIT GRAPH
BROWSE GRAPH
914
FORM OPERATIONS
914a LAYOUT
914b PREVIEW
ABC TEMP92
ANI GENERIC
CARRIER
925a
DAY
925
M-F
OTHER
ROUTE TO
ROUTE TO
920

FIG. 29B

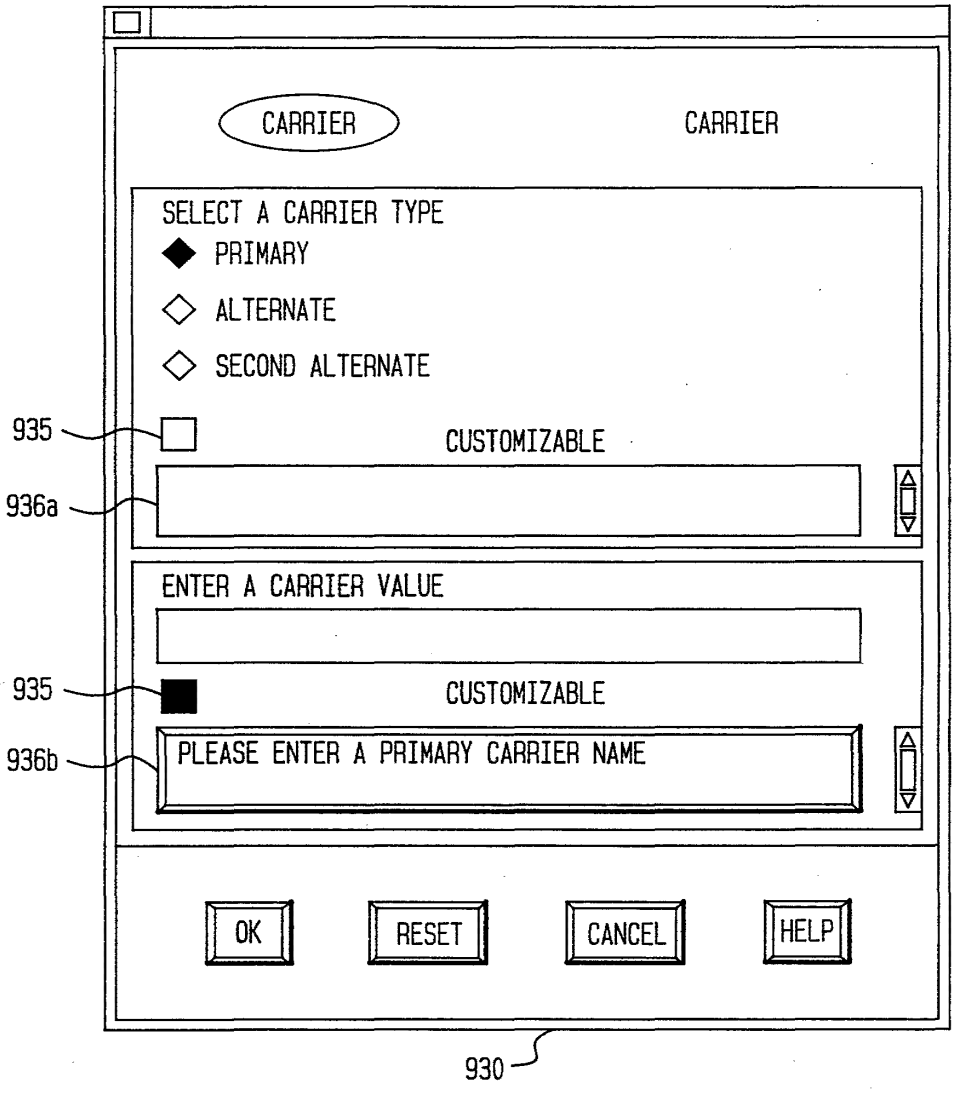
CARRIER
CARRIER
SELECT A CARRIER TYPE
PRIMARY
ALTERNATE
SECOND ALTERNATE
935
CUSTOMIZABLE
936a
ENTER A CARRIER VALUE
935
CUSTOMIZABLE
936b
PLEASE ENTER A PRIMARY CARRIER NAME
OK
RESET
CANCEL
HELP
930

FIG. 29C

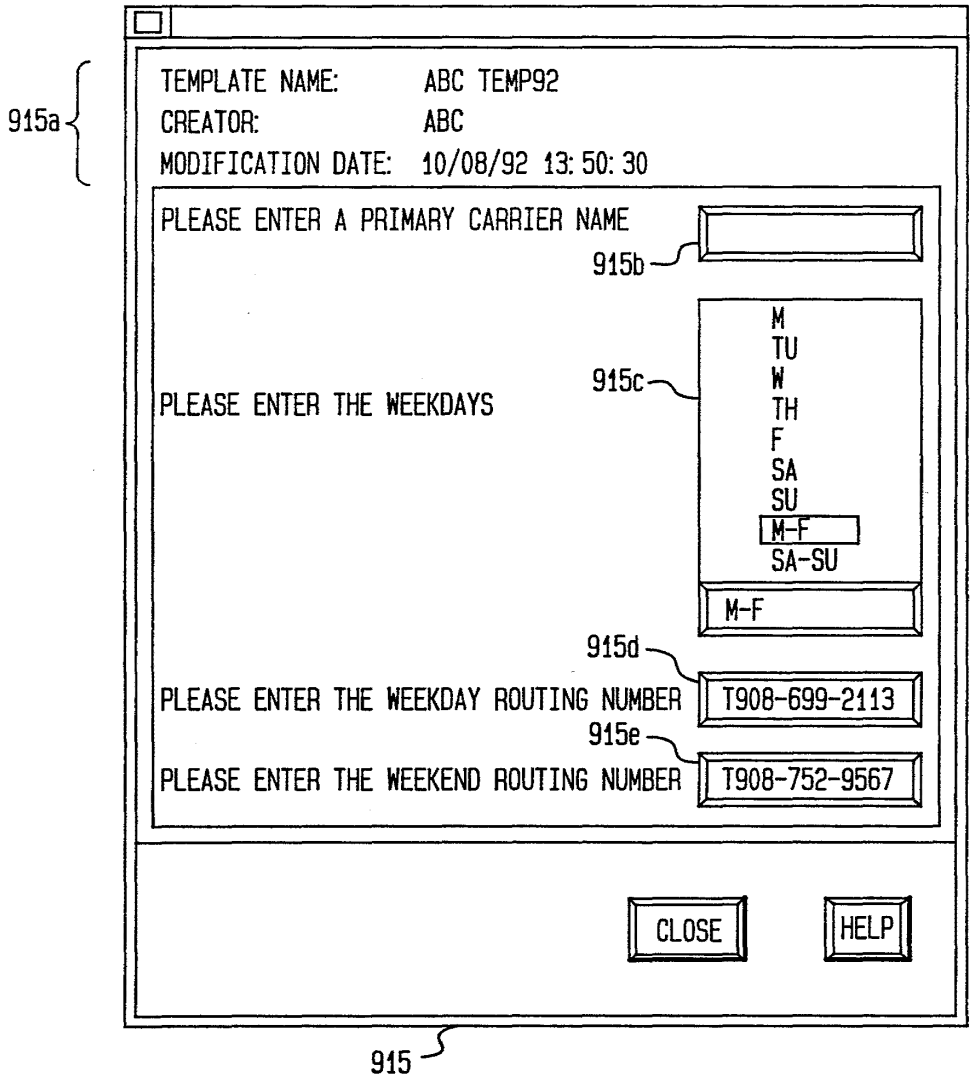
915a
TEMPLATE NAME: ABC TEMP92
CREATOR: ABC
MODIFICATION DATE: 10/08/92 13:50:30
PLEASE ENTER A PRIMARY CARRIER NAME
915b
915c
PLEASE ENTER THE WEEKDAYS
M
TU
W
TH
F
SA
SU
M-F
SA-SU
M-F
915d
PLEASE ENTER THE WEEKDAY ROUTING NUMBER
T908-699-2113
915e
PLEASE ENTER THE WEEKEND ROUTING NUMBER
T908-752-9567
CLOSE
HELP
915

FIG. 29D

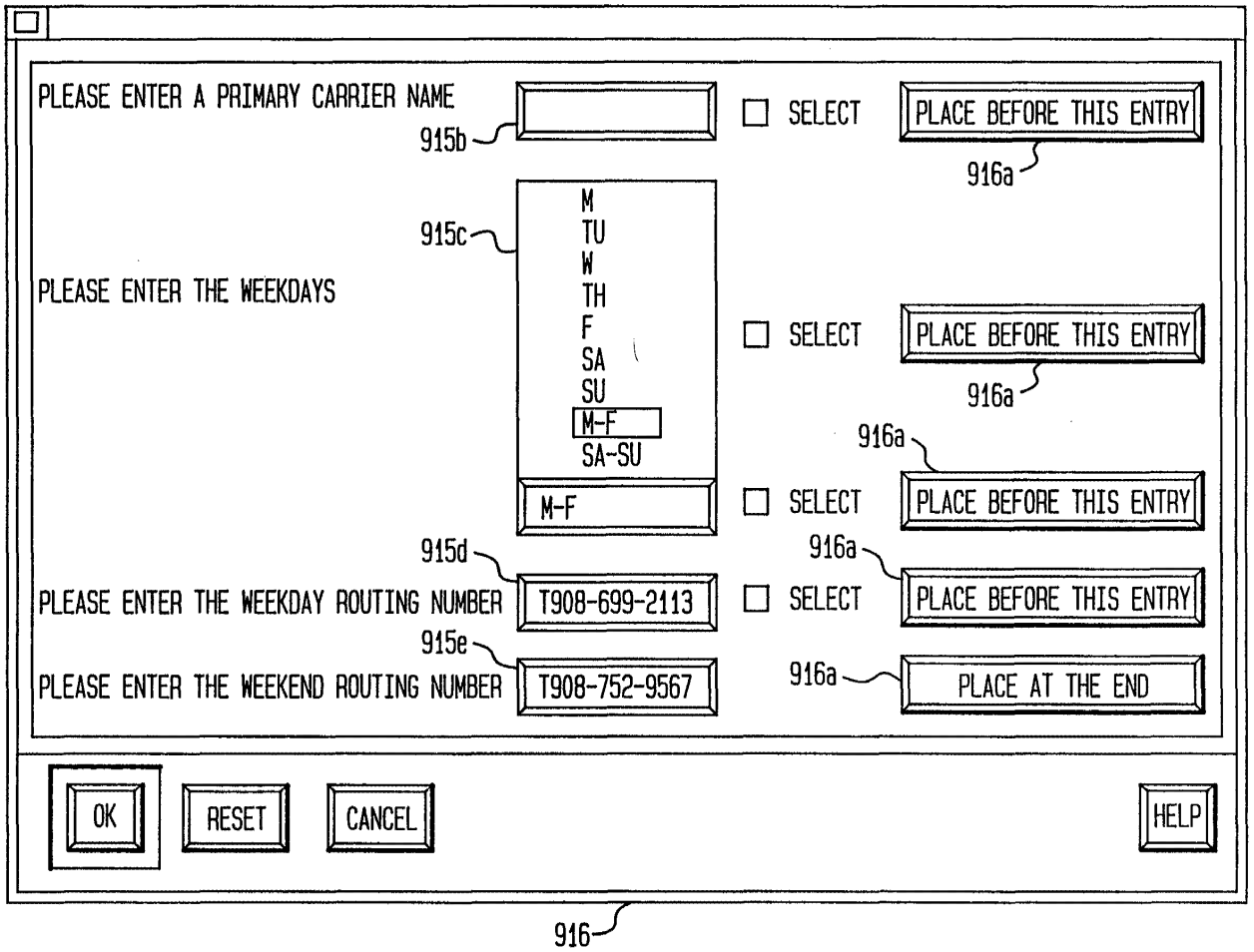
PLEASE ENTER A PRIMARY CARRIER NAME
915b
SELECT
PLACE BEFORE THIS ENTRY
916a
915c
M
TU
W
TH
F
SA
SU
M-F
SA-SU
PLEASE ENTER THE WEEKDAYS
SELECT
PLACE BEFORE THIS ENTRY
916a
M-F
SELECT
PLACE BEFORE THIS ENTRY
916a
915d
PLEASE ENTER THE WEEKDAY ROUTING NUMBER
T908-699-2113
SELECT
PLACE BEFORE THIS ENTRY
916a
915e
PLEASE ENTER THE WEEKEND ROUTING NUMBER
T908-752-9567
PLACE AT THE END
916a
OK
RESET
CANCEL
HELP
916

FIG. 30

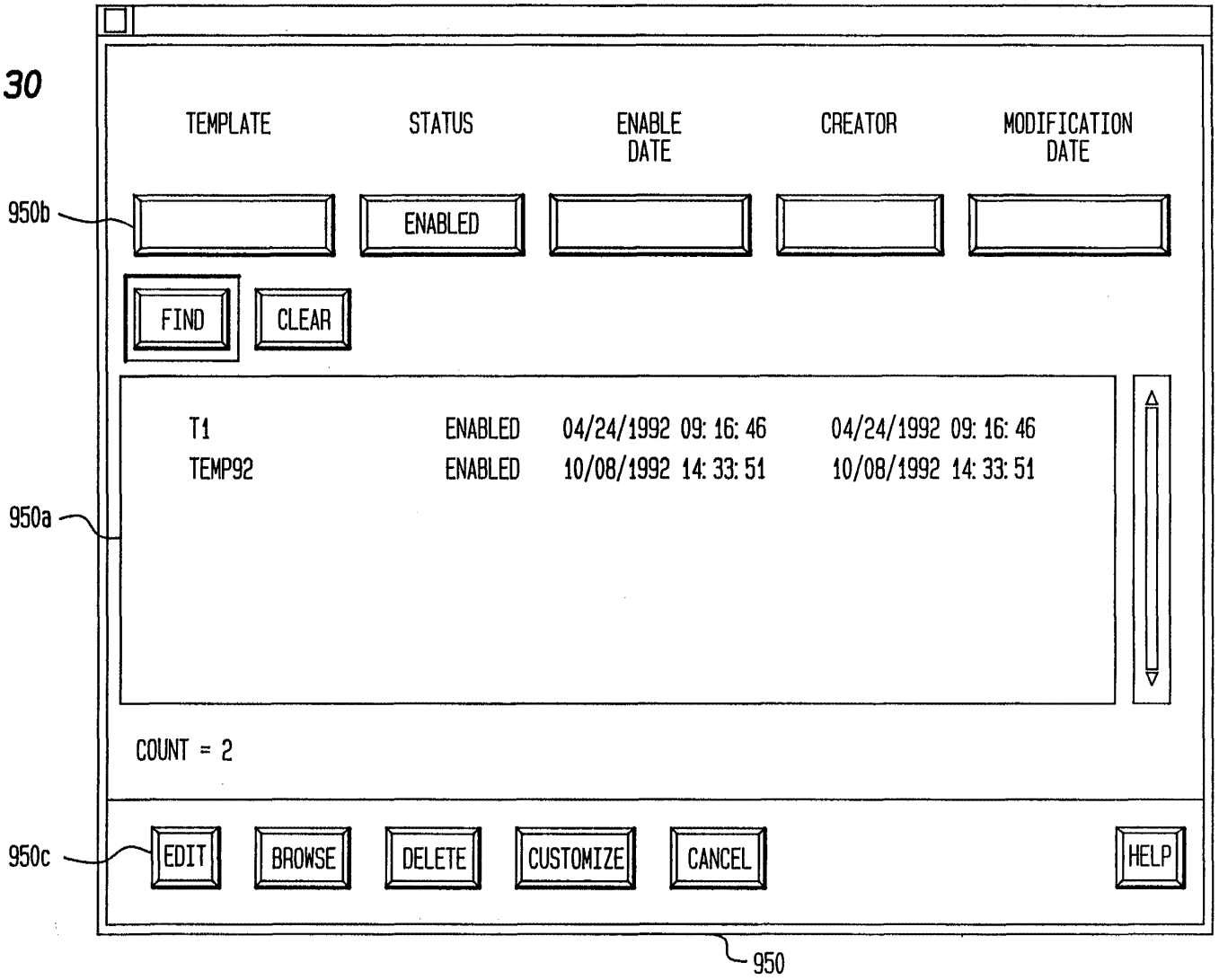

Bright House Networks - Ex. 1108, Page 827

INTERNATIONAL SEARCH REPORT

International application No.
PCT/US93/07835

A. CLASSIFICATION OF SUBJECT MATTER

IPC(5) :H04M 11/00, 15/00, 3/42, 7/00
US CL :379/94, 112, 127, 142, 201, 207, 230
According to International Patent Classification (IPC) or to both national classification and IPC

B. FIELDS SEARCHED

Minimum documentation searched (classification system followed by classification symbols)

U.S. : 379/94, 112, 127, 142, 201, 207, 230

Documentation searched other than minimum documentation to the extent that such documents are included in the fields searched

Electronic data base consulted during the international search (name of data base and, where practicable, search terms used)

C. DOCUMENTS CONSIDERED TO BE RELEVANT

Category*	Citation of document, with indication, where appropriate, of the relevant passages	Relevant to claim No.
X,E Y	US,A, 5,241,588 (Babson, III et al.) 31 August 1993, Entire Document	9,10 & 23-28 1-8 & 11-22
Y	US,A, 4,835,683 (Phillips et al.) 30 May 1989, Abstract	1-4, 12 and 14-22
Y	US,A, 4,611,094 (Asmuth et al.) 09 September 1986, See Fig 19 and 20	14 and 16
Y	US,A, 5,019,961 (Adesso et al.) 28 May 1991, Abstract	14-22
Y	ERICSSON REVIEW, No. 1, 1990, Fredrik Ljunblom, "A Service Management System for the Intelligent Network", pp 32-41	1-28

[X] Further documents are listed in the continuation of Box C. [ ] See patent family annex.

*	Special categories of cited documents:	"T"	later document published after the international filing date or priority date and not in conflict with the application but cited to understand the principle or theory underlying the invention
"A"	document defining the general state of the art which is not considered to be part of particular relevance	"X"	document of particular relevance; the claimed invention cannot be considered novel or cannot be considered to involve an inventive step when the document is taken alone
"E"	earlier document published on or after the international filing date	"Y"	document of particular relevance; the claimed invention cannot be considered to involve an inventive step when the document is combined with one or more other such documents, such combination being obvious to a person skilled in the art
"L"	document which may throw doubts on priority claim(s) or which is cited to establish the publication date of another citation or other special reason (as specified)	"&"	document member of the same patent family
"O"	document referring to an oral disclosure, use, exhibition or other means		
"P"	document published prior to the international filing date but later than the priority date claimed		

Date of the actual completion of the international search 26 JANUARY 1994	Date of mailing of the international search report 28 JAN 1994
Name and mailing address of the ISA/US Commissioner of Patents and Trademarks Box PCT Washington, D.C. 20231 Facsimile No. NOT APPLICABLE	Authorized officer for HARRY S. HONG Telephone No. (703) 305-4717

Form PCT/ISA/210 (second sheet)(July 1992)*

INTERNATIONAL SEARCH REPORT

International application No.
PCT/US93/07835

C (Continuation). DOCUMENTS CONSIDERED TO BE RELEVANT

Category*	Citation of document, with indication, where appropriate, of the relevant passages	Relevant to claim No.
Y	IEEE Communications Magazine, January, 1991, Masanobu Fujioka et al., "Universal Service Creation and Provision Environment for Intelligent Network", pp 44-51, See pp 45-49 and Fig 4.	1-28

Form PCT/ISA/210 (continuation of second sheet)(July 1992)*

PCT WELTORGANISATION FÜR GEISTIGES EIGENTUM
Internationales Büro

INTERNATIONALE ANMELDUNG VERÖFFENTLICHT NACH DEM VERTRAG ÜBER DIE INTERNATIONALE ZUSAMMENARBEIT AUF DEM GEBIET DES PATENTWESENS (PCT)

(51) Internationale Patentklassifikation 6 :
H04M 3/42, H04Q 7/38

A1

(11) Internationale Veröffentlichungsnummer: **WO 95/34985**

(43) Internationales Veröffentlichungsdatum: 21. December 1995 (21.12.95)

(21) Internationales Aktenzeichen: PCT/EP95/02264

(22) Internationales Anmeldedatum: 12. Juni 1995 (12.06.95)

(30) Prioritätsdaten:
P 44 20 462.0 13. Juni 1994 (13.06.94) DE

(71) Anmelder *(nur für AT BE CH DE DK ES FR GB GR IE IT LU MC NL PT SE)*: ALCATEL SEL AKTIENGESELLSCHAFT [DE/DE]; Lorenzstrasse 10, D-70435 Stuttgart (DE).

(71) Anmelder *(nur für AU CA CN FI JP KR MX RU)*: ALCATEL N.V. [NL/NL]; Burgemeester Elsenlaan 170, NL-2288 BH Rijswijk (NL).

(72) Erfinder; und
(75) Erfinder/Anmelder *(nur für US)*: WIZGALL, Manfred [DE/DE]; Eckartshaldenweg 41, D-70191 Stuttgart (DE). KUTTNER, Axel [DE/DE]; Odenwaldstrasse 16, D-70469 Stuttgart (DE).

(74) Anwälte: BROSE, Gerhard usw.; Alcatel SEL AG, Zentralbereich Patente und Lizenzen, Postfach 300 929, D-70449 Stuttgart (DE).

(81) Bestimmungsstaaten: AU, CA, CN, FI, JP, KR, MX, RU, US, europäisches Patent (AT, BE, CH, DE, DK, ES, FR, GB, GR, IE, IT, LU, MC, NL, PT, SE).

Veröffentlicht
Mit internationalem Recherchenbericht.

(54) Title: METHOD OF SELECTING ONE OF AT LEAST TWO TELECOMMUNICATIONS TERMINALS AND A SUITABLE TELECOMMUNICATIONS TERMINAL

(54) Bezeichnung: VERFAHREN ZUR AUSWAHL EINES VON MINDESTENS ZWEI FERNMELDEENDGERÄTEN UND FERNMELDEENDGERÄT DAFÜR

(57) Abstract

Telecommunications infrastructure allowing a call addressed to a particular subscriber to be picked up at one of at least two separate terminals. The aim of the invention is to allow calls to be switched between the terminals in question. The basic concept is that the subscriber (10) is identified to at least one terminal (11) by a subscriber identification card which can be remotely interrogated within a circumscribed area. The subscriber (10) registers all his terminal devices (11, 12) (at home, in the office, in the car, portable) with a service operator (3); each terminal device which recognizes, through remote interrogation, that the subscriber is nearby reports this fact to the service operator (3). Calls addressed to the subscriber are directed to the service operator and whence to whichever terminal device reported last. The invention provides automatic switching without any restriction on the subscriber's freedom of movement.

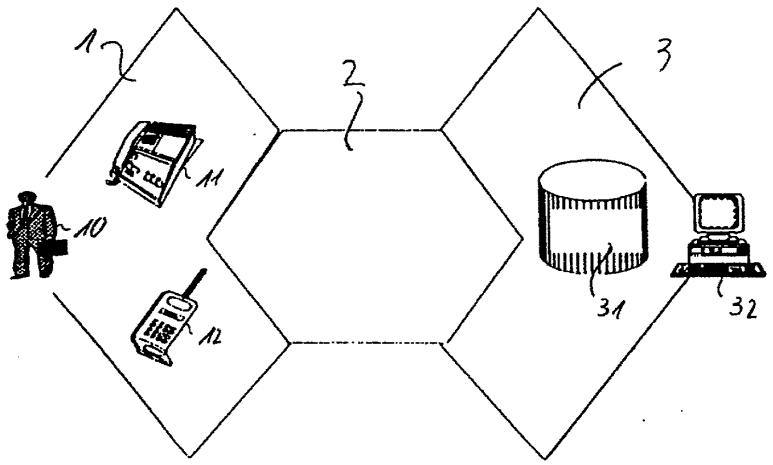

(57) Zusammenfassung

Stand der Technik: Fernmeldeinfrastruktur, die es erlaubt, einen an einen bestimmten Teilnehmer gerichteten Ruf gezielt an einer von mindestens zwei getrennten Endgeräten entgegenzunehmen. Technisches Problem: Gezieltes Umschalten zwischen den in Frage kommenden Endgeräten. Grundgedanke: Teilnehmer (10) identifiziert sich durch räumlich begrenzt fernabfragbare Teilnehmeridentifikationskarte gegenüber mindestens einem der Endgeräte (11). Beispiel: Teilnehmer (10) meldet alle seine Endgeräte (11, 12) (zuhause, im Büro, im Auto, Handheld) bei einem Service Operator (3) an. Jedes Endgerät, das durch Fernabfrage die räumliche Nähe des Teilnehmers erkennt, meldet dies an den Service Operator (3). An den Teilnehmer gerichtete Rufe werden an den Service Operator und von diesem an dasjenige Endgerät geleitet, das sich zuletzt gemeldet hat. Vorteil: Automatisches Umschalten ohne Behinderung der Freiheit des Teilnehmers.

LEDIGLICH ZUR INFORMATION

Codes zur Identifizierung von PCT-Vertragsstaaten auf den Kopfbögen der Schriften, die internationale Anmeldungen gemäss dem PCT veröffentlichen.

AT	Österreich	**GA**	Gabon	**MR**	Mauretanien
AU	Australien	**GB**	Vereinigtes Königreich	**MW**	Malawi
BB	Barbados	**GE**	Georgien	**NE**	Niger
BE	Belgien	**GN**	Guinea	**NL**	Niederlande
BF	Burkina Faso	**GR**	Griechenland	**NO**	Norwegen
BG	Bulgarien	**HU**	Ungarn	**NZ**	Neuseeland
BJ	Benin	**IE**	Irland	**PL**	Polen
BR	Brasilien	**IT**	Italien	**PT**	Portugal
BY	Belarus	**JP**	Japan	**RO**	Rumänien
CA	Kanada	**KE**	Kenya	**RU**	Russische Föderation
CF	Zentrale Afrikanische Republik	**KG**	Kirgisistan	**SD**	Sudan
CG	Kongo	**KP**	Demokratische Volksrepublik Korea	**SE**	Schweden
CH	Schweiz	**KR**	Republik Korea	**SI**	Slowenien
CI	Côte d'Ivoire	**KZ**	Kasachstan	**SK**	Slowakei
CM	Kamerun	**LI**	Liechtenstein	**SN**	Senegal
CN	China	**LK**	Sri Lanka	**TD**	Tschad
CS	Tschechoslowakei	**LU**	Luxemburg	**TG**	Togo
CZ	Tschechische Republik	**LV**	Lettland	**TJ**	Tadschikistan
DE	Deutschland	**MC**	Monaco	**TT**	Trinidad und Tobago
DK	Dänemark	**MD**	Republik Moldau	**UA**	Ukraine
ES	Spanien	**MG**	Madagaskar	**US**	Vereinigte Staaten von Amerika
FI	Finnland	**ML**	Mali	**UZ**	Usbekistan
FR	Frankreich	**MN**	Mongolei	**VN**	Vietnam

Verfahren zur Auswahl eines von mindestens zwei Fernmeldeendgeräten und Fernmeldeendgerät dafür

Die Erfindung betrifft ein Verfahren zur Auswahl eines von mindestens zwei Fernmeldeendgeräten nach dem Oberbegriff des Anspruchs 1 und ein Fernmeldeendgerät, insbesondere ein Fernsprechendgerät, zur Durchführung dieses Verfahrens.

Im konventionellen Fernsprechnetz besitzt jeder Teilnehmer ein Fernsprechendgerät, über das er an einem ganz bestimmten Ort unter einer ganz bestimmten Fernsprechnummer erreichbar ist. Damit ist die Fernsprechnummer letztlich nicht dem Teilnehmer, sondern dem Ort zugeordnet. Einerseits ist dieser Teilnehmer unter "seiner" Nummer nicht erreichbar, wenn er sich an einem anderen Ort aufhält, andererseits sind aber andere Personen, etwa Familienangehörige, unter dieser Nummer erreichbar, obwohl sie nicht im Teilnehmerverzeichnis stehen.

Im Mobilfunknetz dagegen ist unter einer bestimmten Fernsprechnummer immer der Ort erreichbar, an dem sich das Mobilfunkgerät des Teilnehmers und damit oft dieser selbst befindet. Allerdings haben die meisten Mobilfunkteilnehmer, nicht zuletzt aus Kostengründen, außer dem Mobilfunkgerät auch noch ein "Festnetzgerät" und damit eine zweite Fernsprechnummer. Ein Anrufer muß dann wissen, welche der beiden Nummern er wählen soll. In der

Praxis erfolgt dies häufig durch Probieren. Auch technische Lösungen für die Probiermethode sind bekannt. Dabei wird jeder nicht an einem ersten Endgerät angenommene Ruf nach einer vorgegebenen Zeit (z.B. nach dreimaligem Läuten) an ein zweites Endgerät umgeschaltet, vielleicht anschließend auch noch an ein drittes Endgerät oder wieder zurück an das erste.

Es sind auch Lösungen bekannt, bei denen der Teilnehmer jeweils einer irgendwie gearteten Zentrale melden muß, an welchem Endgerät er sich gerade befindet. Rufe an den Teilnehmer gehen dann an diese Zentrale und werden von dort an das ausgewählte Endgerät weitergeleitet. Die vorliegende Erfindung setzt eine solche Fernmeldeinfrastruktur voraus und baut darauf auf.

Das der vorliegenden Aufgabe zugrundeliegende Problem liegt darin, den seitens des Teilnehmers erforderlichen Aufwand zum Umschalten zwischen den in Frage kommenden Endgeräten zu verringern.

Die Aufgabe wird gelöst durch ein Verfahren nach der Lehre des Anspruchs 1 und ein Fernmeldeendgerät nach der Lehre des Anspruchs 4.

Der Grundgedanke der Erfindung liegt demnach darin, daß sich der Teilnehmer durch einen räumlich begrenzt fernabfragbaren Teilnehmeridentifikationsausweis gegenüber mindestens einem der Endgeräte ausweist, das dann eine Meldung an die Zentrale veranlaßt, wodurch dann jedes für den Teilnehmer bestimmte ankommende Gespräch zu diesem Endgerät geleitet wird.

Weitere Ausgestaltungen der Erfindung sind den Unteransprüchen zu entnehmen.

Im folgenden wird die Erfindung anhand eines Ausführungsbeispiels unter Zuhilfenahme der beiliegenden Zeichnung weiter erläutert.

Die Zeichnung zeigt einen Teilnehmerbereich 1, einen Netzbereich 2 und einen Diensteanbieterbereich 3. Im Teilnehmerbereich 1 sind der Teilnehmer 10, sein stationäres Fernsprechgerät 11 und sein Handfunktelefon 12 gezeigt. Der Diensteanbieterbereich 3 ist durch eine Datenbank 31 und ein Datenterminal 32 symbolisiert. Das Datenterminal 32 wird im folgenden nicht weiter erwähnt. Es ist für den laufenden Betrieb nicht erforderlich.

Sowohl das Fernsprechgerät 11, als auch das Handfunktelefon 12 und der Diensteanbieterbereich 3 sind über den Netzbereich 2, der letztlich das gesamte weltweite Fernmeldenetz umfaßt, miteinander verbindbar.

Das Fernsprechgerät 11 und das Handfunktelefon 12 sind in bekannter Weise unter verschiedenen Nummern, die in der Regel durch unterschiedliche Ausscheidungskennziffern erreichbar sind, vom Netzbereich 2 aus erreichbar. Weiter ist dem Teilnehmer 10 im Diensteanbieterbereich 3 eine Nummer zugeordnet, während der Diensteanbieterbereich 3 selbst durch Wahl bestimmter Ausscheidungskennziffern erreichbar ist.

Der Teilnehmer 10 ist erreichbar durch Wahl der Ausscheidungskennziffern für den Diensteanbieterbereich 3 und der diesem Teilnehmer im Dienstanbieterbereich 3 zugeordneten Nummer. Unter Zuhilfenahme der in der Datenbank 31 enthaltenen, den Teilnehmer 10 betreffenden, Daten wird nun der Ruf entweder an das Fernsprechgerät 11 oder an das Handfunktelefon 12 weitergeleitet. Diese Weiterleitung erfolgt durch Signalisierung der entsprechenden Daten an die aus dem Netzbereich 2 anfragende, den Verbindungsaufbau steuernde Vermittlungsstelle. Bis hierher unterscheidet sich die Erfindung noch nicht von Bekanntem. Details sind deshalb insoweit nicht nötig.

Der Einfachheit halber wird nun angenommen, und dies macht in der Praxis durchaus Sinn, sagt ein Eintrag in der Datenbank 31 aus, daß

von den beiden in Frage kommenden Endgeräten 11 und 12 immer dann das Handfunktelefon 12 ausgewählt wird, wenn vom Fernsprechgerät 11 keine Meldung vorliegt, daß sich der Teilnehmer 10 in dessen Nähe aufhält.

Das Fernsprechgerät 11 ist nun so ausgestaltet, daß es einen Sensor enthält, um aus seiner Umgebung Teilnehmeridentifikationssignale zu empfangen und daß es eine Schalteinrichtung aufweist, um beim Empfang eines Teilnehmeridentifikationssignals als Reaktion eine Meldung an den Diensteanbieterbereich 3 auszulösen. Meldungen an den Diensteanbieterbereich 3 können als Anmeldungen und Abmeldungen erfolgen; der augenblickliche Zustand ist dann sowohl im Fernsprechgerät 11 als auch in der Datenbank 31 festgehalten.

Sensören, die auf Identifikationssignale ansprechen, sind für die verschiedensten Zwecke bekannt; viele der bekannten Lösungen sind auch hier anwendbar. Beispiele hierfür sind auf induktiver Basis arbeitende Warensicherungsanlagen, auf Funkbasis arbeitende Plakettenidentifikationssysteme für Frachtcontainer oder Eisenbahngüterwagen (wie z.B. in den US-Patenten 4,739,328, 4,864,158, 5,030,807 und 5,055,659 beschrieben) oder auch auf Infrarotbasis oder Ultraschallbasis arbeitende Erkennungssysteme.

Auch die Stimme des Teilnehmers könnte als dessen "Ausweis" verwendet als Teilnehmeridentifizierungssignal Verwendung finden. In Fernsprechgeräte eingebaute Mikrofone als Teil einer Freisprecheinrichtung sind ebenso bekannt wie eingebaute Spracherkennungseinrichtungen zur sprachgeführten Benutzung. Schon mit sehr wenig Zusatzaufwand im Teilnehmerbereich 1 (Ergänzung in der Software) könnte so die Erfindung durchgeführt werden.

Wenn nicht gerade der Teilnehmer selbst mit seiner Stimme oder im Zusammenhang mit einem Bildtelefongerät mit seinem Aussehen als Ausweis wirkt, sondern irgendeine fernabfragbare Einheit als Ausweiskarte trägt, dann muß das Fernsprechgerät 11 noch einen geeigneten Generator aufweisen, der ein Feld erzeugt, mit dessen

Hilfe diese vom Teilnehmer 10 mitgeführte Einheit "Ausweiskarte" zum Senden von Teilnehmeridentifikationssignalen veranlaßt wird. Je nach verwendetem Erkennungssystem ist dies ein Magnetfeldgenerator, ein HF-Sender, ein Infrarot- oder Ultraschallsender oder auch der Lautsprecher einer Freisprecheinrichtung. Von Warensicherungsanlagen beispielsweise ist es bekannt, nur passiv ein angelegtes Magnetfeld zu verändern und dann diese Veränderung zu erkennen. Beim genannten Plakettenidentifizierungssystem wird die empfangene HF-Energie als Energiequelle zur Absendung einer Folge von HF-Impulsen verwendet. Wieder andere Systeme enthalten eigene Batterien als Energiequellen und werden durch äußere Signale oder Felder nur angeregt.

Diejenigen Schalteinrichtungen, die erforderlich sind, um Meldungen über Anwesenheit oder Abwesenheit des Teilnehmers vom Fernsprechgerät 11 an den Dienstanbieterbereich 3 zu senden, sind letztlich Fernüberwachungseinrichtungen und als solche ausreichend bekannt.

Im folgenden werden noch einige Ergänzungs- und Abwandlungsmöglichkeiten angegeben:

Besitzt der Teilnehmer weitere Endgeräte, so müssen auch diese der Datenbank 31 bekannt sein. Auch von ihnen müssen Meldungen über Anwesenheit oder Abwesenheit des Teilnehmers an die Datenbank 31 gesendet werden.

Die Auslösung solcher Meldungen kann beim einen oder andern Endgerät auch anders erfolgen. Beispielsweise kann die Inbetriebnahme eines Kraftfahrzeugs des Teilnehmers 10 als dessen Anwesenheit im Kraftfahrzeug interpretiert und über ein eingebautes Mobilfunktelefon an die Datenbank 31 gemeldet werden. Ankommende Rufe gehen dann an dieses Mobilfunktelefon.

Es ist auch bekannt, daß sich ein Teilnehmer an einem beliebigen Telefon durch Meldung an eine Zentrale unter Zuhilfenahme einer Chipkarte oder eines Codewortes bei einem Diensteanbieter meldet, um von diesem Telefon aus auf seine Kosten zu telefonieren und um dort unter seiner Nummer angerufen werden zu können. Auch dies kann in das erfindungsgemäße Verfahren mit eingebunden werden.

Im oben genannten Beispiel ist das Handfunktelefon 12 dasjenige Endgerät, das ausgewählt wird, wenn kein anderes Endgerät die Anwesenheit des Teilnehmers 10 meldet. Als Alternativen hierzu käme etwa ein Anrufbeantworter in Frage oder auch die Meldung über einen Pager oder nur die Hinterlassung einer Nachricht in der Datenbank 31, die dann bei nächster Gelegenheit an den Teilnehmer 10 weitergegeben wird.

Die Funktion, die im oben genannten Beispiel der Diensteanbieterbereich 3 übernimmt, kann auch im Teilnehmerbereich 1 selbst ausgeführt werden. Die erforderlichen Einrichtungen können im Fernsprechgerät 11 mit enthalten sein. Ist dieses ein ISDN-Gerät mit zwei Basis- oder B-Kanälen und einem Daten- oder D-Kanal, so können die auf einem B-Kanal ankommenden Rufe auf dem andern B-Kanal zu demjenigen Endgerät weitergeleitet werden, an dem der Teilnehmer erreichbar ist. Meldungen erfolgen dann über den D-Kanal.

Ein weiteres einfaches Beispiel der Erfindung liegt in einer automatischen Umschaltung zwischen zwei oder mehr Endgeräten im selben Haus. Dabei sind alle Endgeräte in Reihe geschaltet. Jedes Endgerät bis auf das letzte schaltet solange zum nächsten Endgerät weiter, solange es nicht die Anwesenheit des Teilnehmers 10 feststellt. Bei diesem Beispiel ist keine irgendwie geartete Zentrale erforderlich; auch Schalteinrichtungen zur Weitergabe von Meldungen sind nicht erforderlich.

Patentansprüche

1. Verfahren zur Auswahl eines von mindestens zwei demselben Teilnehmer zugeordneten oder zuordenbaren Fernmeldeendgeräten (11, 12), d a d u r c h g e k e n n z e i c h n e t , daß mindestens eines dieser Fernmeldeendgeräte (11) Teilnehmeridentifikationssignale aus seiner Umgebung zu empfangen in der Lage ist und daß beim Erkennen eines solchen Signals die Zuordnung dieses Fernmeldeendgerätes (11) an den Teilnehmer (10) veranlaßt wird.

2. Verfahren nach Anspruch 1, dadurch gekennzeichnet, daß mindestens ein Fernmeldeendgerät (11) ein Feld erzeugt, durch das eine vom Teilnehmer (10) mitgeführte Einheit veranlaßt wird, Teilnehmeridentifikationssignale zu senden.

3. Verfahren nach Anspruch 1, dadurch gekennzeichnet, daß das Fernmeldeendgerät (11) das Erkennen eines Teilnehmeridentifikationssignals an eine Zentrale (3) meldet, daß an den Teilnehmer (10) gerichtete Rufe an die Zentrale (3) gemeldet werden und daß die Zentrale (3) aufgrund der vorliegenden Meldungen ein Fernmeldeendgerät (11, 12) auswählt und die Weiterleitung an dieses Fernmeldeendgerät (11, 12) veranlaßt.

4. Fernmeldeendgerät (11), insbesondere Fernsprechendgerät, dadurch gekennzeichnet, daß es einen Sensor aufweist, um aus der Umgebung Teilnehmeridentifikationssignale zu empfangen und daß es eine Schalteinrichtung aufweist, um beim Empfang eines Teilnehmeridentifikationssignals eine Reaktion auszulösen.

5. Fernmeldeendgerät (11) nach Anspruch 4, dadurch gekennzeichnet, daß es einen Generator aufweist, um ein Feld zu erzeugen, durch das eine von einem Teilnehmer (10) mitgeführte Einheit veranlaßt wird, Teilnehmeridentifikationssignale zu senden.

6. Fernmeldeendgerät (11) nach Anspruch 4, dadurch gekennzeichnet, daß die Schalteinrichtung ein Mittel aufweist, um über das Fernmeldenetz (2) eine Meldung an eine Zentrale (3) zu senden.

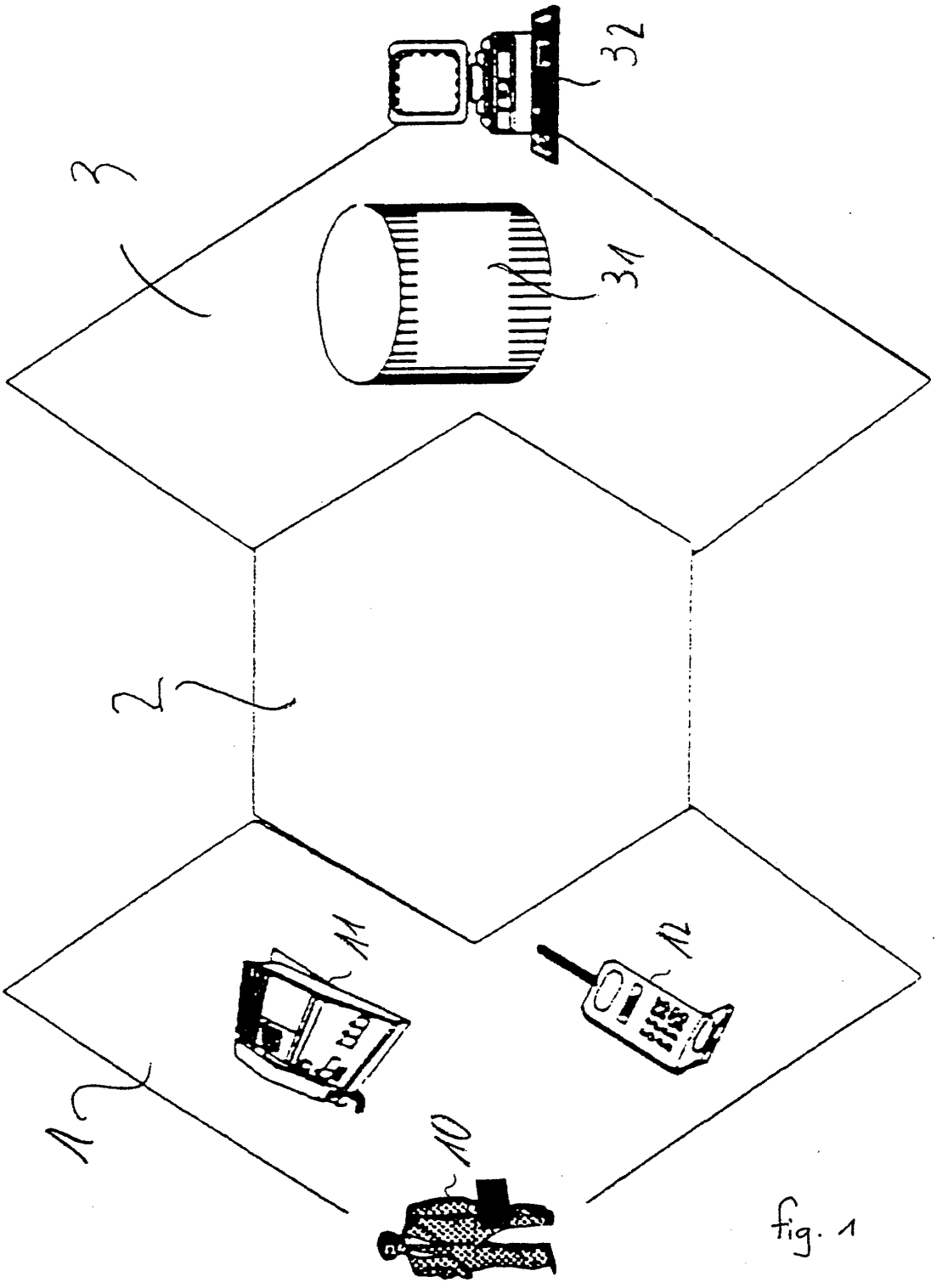

fig. 1

INTERNATIONAL SEARCH REPORT

Intern. al Application No
PCT/EP 95/02264

A. CLASSIFICATION OF SUBJECT MATTER
IPC 6 H04M3/42 H04Q7/38

According to International Patent Classification (IPC) or to both national classification and IPC

B. FIELDS SEARCHED

Minimum documentation searched (classification system followed by classification symbols)
IPC 6 H04M H04Q

Documentation searched other than minimum documentation to the extent that such documents are included in the fields searched

Electronic data base consulted during the international search (name of data base and, where practical, search terms used)

C. DOCUMENTS CONSIDERED TO BE RELEVANT

Category *	Citation of document, with indication, where appropriate, of the relevant passages	Relevant to claim No.
X	GB,A,2 254 755 (THE GENERAL ELECTRIC COMP.) 14 October 1992 see the whole document ---	1-6
X	EP,A,0 520 194 (NETWORK ACCESS CORP.) 30 December 1992 see column 2, line 38 - column 3, line 58 ---	1-6
X	WO,A,93 10616 (LIGHT IDEAS INC.) 27 May 1993 see page 14, line 20 - page 16, line 19 ---	1,3,4,6
X	GB,A,2 222 503 (CALLSCAN LIM.) 7 March 1990 see the whole document ---	1,3,4,6

-/--

[X] Further documents are listed in the continuation of box C.

[X] Patent family members are listed in annex.

* Special categories of cited documents :

"A" document defining the general state of the art which is not considered to be of particular relevance

"E" earlier document but published on or after the international filing date

"L" document which may throw doubts on priority claim(s) or which is cited to establish the publication date of another citation or other special reason (as specified)

"O" document referring to an oral disclosure, use, exhibition or other means

"P" document published prior to the international filing date but later than the priority date claimed

"T" later document published after the international filing date or priority date and not in conflict with the application but cited to understand the principle or theory underlying the invention

"X" document of particular relevance; the claimed invention cannot be considered novel or cannot be considered to involve an inventive step when the document is taken alone

"Y" document of particular relevance; the claimed invention cannot be considered to involve an inventive step when the document is combined with one or more other such documents, such combination being obvious to a person skilled in the art.

"&" document member of the same patent family

Date of the actual completion of the international search	Date of mailing of the international search report
25 September 1995	06. 10. 95

Name and mailing address of the ISA	Authorized officer
European Patent Office, P.B. 5818 Patentlaan 2 NL - 2280 HV Rijswijk Tel. (+31-70) 340-2040, Tx. 31 651 epo nl, Fax: (+31-70) 340-3016	Vandevenne, M

Form PCT/ISA/210 (second sheet) (July 1992)

Bright House Networks - Ex. 1108, Page 841

INTERNATIONAL SEARCH REPORT

Intern. ..al Application No
PCT/EP 95/02264

C.(Continuation) DOCUMENTS CONSIDERED TO BE RELEVANT

Category *	Citation of document, with indication, where appropriate, of the relevant passages	Relevant to claim No.
X	GB,A,2 198 910 (STANLEY ELECTRIC) 22 June 1988 see abstract	1,3,4,6
X	EP,A,0 536 949 (A.T.T.) 14 April 1993 see column 2, line 45 - column 3, line 20	1,3,4,6
A	EP,A,0 546 467 (ALCATEL SEL) 16 June 1993	

Form PCT/ISA/210 (continuation of second sheet) (July 1992)

Bright House Networks - Ex. 1108, Page 842

INTERNATIONAL SEARCH REPORT

Information on patent family members

Interna al Application No
PCT/EP 95/02264

Patent document cited in search report	Publication date	Patent family member(s)		Publication date
GB-A-2254755	14-10-92	NONE		
EP-A-520194	30-12-92	US-A-	5315636	24-05-94
		CA-A-	2069727	29-12-92
		JP-A-	5191516	30-07-93
		US-A-	5416780	16-05-95
WO-A-9310616	27-05-93	AU-A-	2378392	15-06-93
GB-A-2222503	07-03-90	NONE		
GB-A-2198910	22-06-88	JP-A-	63152255	24-06-88
		JP-A-	63152256	24-06-88
		JP-A-	63152257	24-06-88
		DE-A-	3732109	30-06-88
		FR-A-	2608877	24-06-88
EP-A-536949	14-04-93	CA-A-	2076434	10-04-93
		JP-A-	7066875	10-03-95
		US-A-	5428663	27-06-95
EP-A-546467	16-06-93	DE-A-	4140974	17-06-93
		AU-A-	2991392	17-06-93

Bright House Networks - Ex. 1108, Page 843

INTERNATIONALER RECHERCHENBERICHT

Intern: ales Aktenzeichen
PCT/EP 95/02264

A. KLASSIFIZIERUNG DES ANMELDUNGSGEGENSTANDES
IPK 6 H04M3/42 H04Q7/38

Nach der Internationalen Patentklassifikation (IPK) oder nach der nationalen Klassifikation und der IPK

B. RECHERCHIERTE GEBIETE

Recherchierter Mindestprüfstoff (Klassifikationssystem und Klassifikationssymbole)
IPK 6 H04M H04Q

Recherchierte aber nicht zum Mindestprüfstoff gehörende Veröffentlichungen, soweit diese unter die recherchierten Gebiete fallen

Während der internationalen Recherche konsultierte elektronische Datenbank (Name der Datenbank und evtl. verwendete Suchbegriffe)

C. ALS WESENTLICH ANGESEHENE UNTERLAGEN

Kategorie°	Bezeichnung der Veröffentlichung, soweit erforderlich unter Angabe der in Betracht kommenden Teile	Betr. Anspruch Nr.
X	GB,A,2 254 755 (THE GENERAL ELECTRIC COMP.) 14.Oktober 1992 siehe das ganze Dokument ---	1-6
X	EP,A,0 520 194 (NETWORK ACCESS CORP.) 30.Dezember 1992 siehe Spalte 2, Zeile 38 - Spalte 3, Zeile 58 ---	1-6
X	WO,A,93 10616 (LIGHT IDEAS INC.) 27.Mai 1993 siehe Seite 14, Zeile 20 - Seite 16, Zeile 19 ---	1,3,4,6
X	GB,A,2 222 503 (CALLSCAN LIM.) 7.März 1990 siehe das ganze Dokument --- -/--	1,3,4,6

[X] Weitere Veröffentlichungen sind der Fortsetzung von Feld C zu entnehmen

[X] Siehe Anhang Patentfamilie

° Besondere Kategorien von angegebenen Veröffentlichungen :
"A" Veröffentlichung, die den allgemeinen Stand der Technik definiert, aber nicht als besonders bedeutsam anzusehen ist
"E" älteres Dokument, das jedoch erst am oder nach dem internationalen Anmeldedatum veröffentlicht worden ist
"L" Veröffentlichung, die geeignet ist, einen Prioritätsanspruch zweifelhaft erscheinen zu lassen, oder durch die das Veröffentlichungsdatum einer anderen im Recherchenbericht genannten Veröffentlichung belegt werden soll oder die aus einem anderen besonderen Grund angegeben ist (wie ausgeführt)
"O" Veröffentlichung, die sich auf eine mündliche Offenbarung, eine Benutzung, eine Ausstellung oder andere Maßnahmen bezieht
"P" Veröffentlichung, die vor dem internationalen Anmeldedatum, aber nach dem beanspruchten Prioritätsdatum veröffentlicht worden ist
"T" Spätere Veröffentlichung, die nach dem internationalen Anmeldedatum oder dem Prioritätsdatum veröffentlicht worden ist und mit der Anmeldung nicht kollidiert, sondern nur zumVerständnis des der Erfindung zugrundeliegenden Prinzips oder der ihr zugrundeliegenden Theorie angegeben ist
"X" Veröffentlichung von besonderer Bedeutung; die beanspruchte Erfindung kann allein aufgrund dieser Veröffentlichung nicht als neu oder auf erfinderischer Tätigkeit beruhend betrachtet werden
"Y" Veröffentlichung von besonderer Bedeutung; die beanspruchte Erfindung kann nicht als auf erfinderischer Tätigkeit beruhend betrachtet werden, wenn die Veröffentlichung mit einer oder mehreren anderen Veröffentlichungen dieser Kategorie in Verbindung gebracht wird und diese Verbindung für einen Fachmann naheliegend ist
"&" Veröffentlichung, die Mitglied derselben Patentfamilie ist

1

Datum des Abschlusses der internationalen Recherche	Absendedatum des internationalen Recherchenberichts
25.September 1995	06.10.95

Name und Postanschrift der Internationale Recherchenbehörde	Bevollmächtigter Bediensteter
Europäisches Patentamt, P.B. 5818 Patentlaan 2 NL - 2280 HV Rijswijk Tel. (+31-70) 340-2040, Tx. 31 651 epo nl, Fax: (+31-70) 340-3016	Vandevenne, M

Formblatt PCT/ISA/210 (Blatt 2) (Juli 1992)

Bright House Networks - Ex. 1108, Page 844

INTERNATIONALER RECHERCHENBERICHT

Internales Aktenzeichen
PCT/EP 95/02264

C.(Fortsetzung) ALS WESENTLICH ANGESEHENE UNTERLAGEN

Kategorie*	Bezeichnung der Veröffentlichung, soweit erforderlich unter Angabe der in Betracht kommenden Teile	Betr. Anspruch Nr.
X	GB,A,2 198 910 (STANLEY ELECTRIC) 22.Juni 1988 siehe Zusammenfassung	1,3,4,6
X	EP,A,0 536 949 (A.T.T.) 14.April 1993 siehe Spalte 2, Zeile 45 - Spalte 3, Zeile 20	1,3,4,6
A	EP,A,0 546 467 (ALCATEL SEL) 16.Juni 1993	

Formblatt PCT/ISA/210 (Fortsetzung von Blatt 2) (Juli 1992)

Bright House Networks - Ex. 1108, Page 845

INTERNATIONALER RECHERCHENBERICHT

Angaben zu Veröffentlichungen, die zur selben Patentfamilie gehören

Intern... ...ales Aktenzeichen
PCT/EP 95/02264

Im Recherchenbericht angeführtes Patentdokument	Datum der Veröffentlichung	Mitglied(er) der Patentfamilie		Datum der Veröffentlichung
GB-A-2254755	14-10-92	KEINE		
EP-A-520194	30-12-92	US-A-	5315636	24-05-94
		CA-A-	2069727	29-12-92
		JP-A-	5191516	30-07-93
		US-A-	5416780	16-05-95
WO-A-9310616	27-05-93	AU-A-	2378392	15-06-93
GB-A-2222503	07-03-90	KEINE		
GB-A-2198910	22-06-88	JP-A-	63152255	24-06-88
		JP-A-	63152256	24-06-88
		JP-A-	63152257	24-06-88
		DE-A-	3732109	30-06-88
		FR-A-	2608877	24-06-88
EP-A-536949	14-04-93	CA-A-	2076434	10-04-93
		JP-A-	7066875	10-03-95
		US-A-	5428663	27-06-95
EP-A-546467	16-06-93	DE-A-	4140974	17-06-93
		AU-A-	2991392	17-06-93

Bright House Networks - Ex. 1108, Page 846