Chapter 21

Playing Musical Instruments

Solutions in this chapter:

- Creating a Drummer
- Creating a Pianist
- Other Suggestions

Introduction

Chapter 6 describes the sound system of the RCX and the way you can program it to produce music. Here we are going to explore a more indirect way of performing music, one where your robot actually plays an instrument.

The main difference between the two creatures described in this chapter lies in their instruments. The first, a drummer, plays a custom LEGO-made drum-set specifically designed for the task, while the second, a pianist, performs on a real piano. This diversity, as you'll see, reflects heavily on their architecture; the chess machine of Chapter 20 taught you that interfacing LEGO with real-world objects, no matter how common they are, is usually difficult and requires a great deal of effort (and many parts!).

Creating a Drummer

The part you need to base your drummer design on, not surprisingly, is the drum set. From what we know, LEGO doesn't make any part that acts as a drum, so you need to be imaginative and come up with an alternative. When we attempted this, small cans first came to mind as an option, but then we felt a more LEGO-like solution might be appropriate, so we started rummaging through our drawers searching for a part that might provide the right inspiration.

That's when we came upon the wheel hubs. They seemed perfectly suited for our goal, their shape closely resembling that of a real drum. The only missing part was the "skin," the diaphragm that covers drums and that produces the sound when hit. A visit to the kitchen solved this problem, too: ordinary plastic wrap provided us with an answer. We stretched two tight layers of it on one side of the hub, secured it with a rubber band, trimmed the excess wrap, and our drum was ready to use.

The second problem we faced regarded the sticks and, more importantly, the percussion mechanism. Playing a drum is more a matter of speed than strength: the stick must hit the drum very quickly and promptly withdraw, helped in this by the bounce. We tinkered with some different mechanisms in order to emulate a human drummer's swinging movement—with little success. Have you ever banged your head against the wall searching for a complex solution, only to find an answer that's not only incredibly simple? Better late than never, we discovered that an axle perpendicularly attached to the motor does the trick. Keeping the motor powered for a very short time and then switching it into float mode causes it to pass on enough speed to the "stick" that it bounces back with no resistance.

Building the Drummer

With the basic design and material problems solved, the rest of the robot came together quite easily (Figure 21.1). It is, indeed, one of the simplest robots in the book, made only from MINDSTORMS parts with a third (optional) motor added in.

Figure 21.1 The Drummer

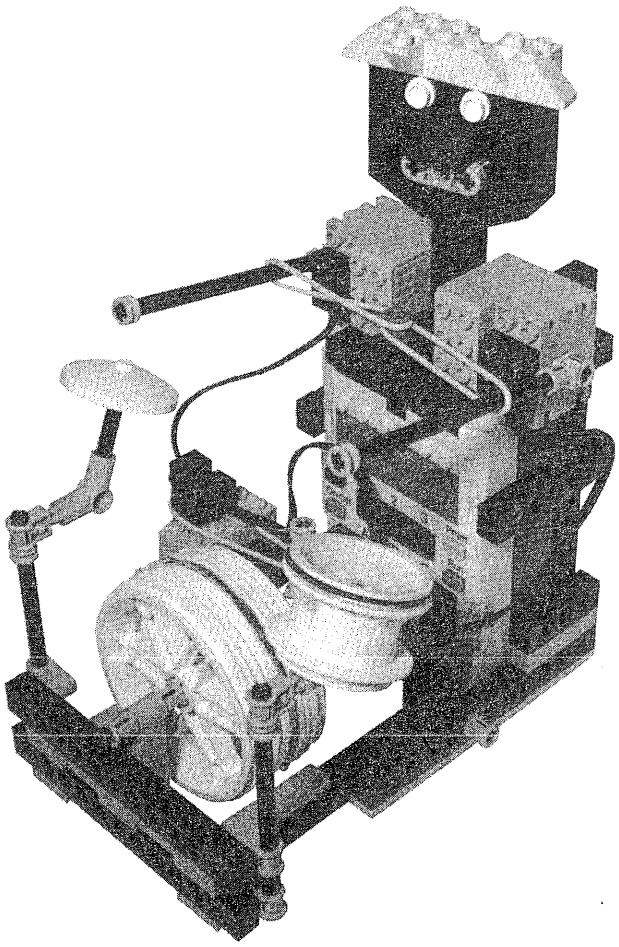

The drum set contains a bass drum, a tom-tom, and a cymbal, though the latter sounds rather dull, since it's a piece of plastic rather than a true cymbal! (Figure 21.2).

Figure 21.2 Drummer Top View

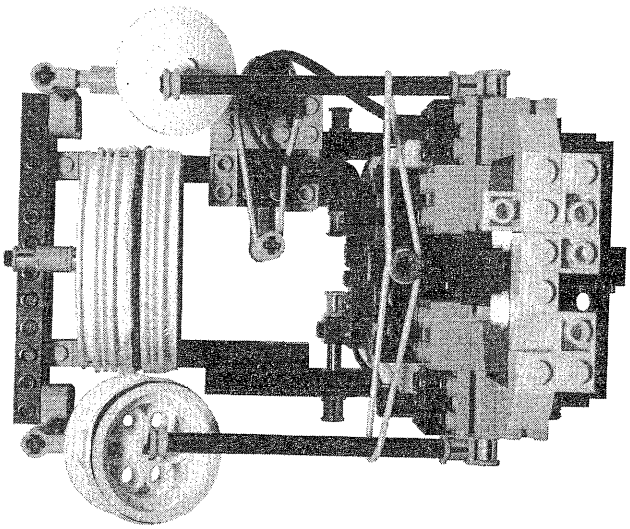

Both the sticks and the pedal feature a slack belt that helps them return t their neutral position (Figure 21.3).

Figure 21.3 Drummer Left Side View

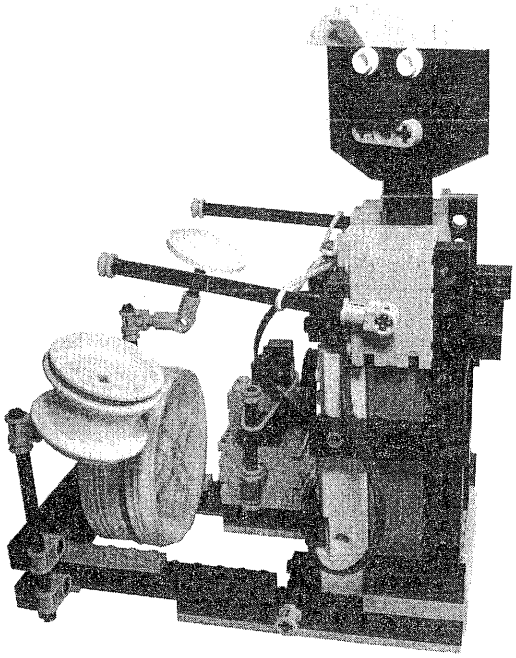

The entire drum set is attached to a base beam, which is connected to the feet of the drummer so as to form a single, solid assembly (Figure 21.4).

Figure 21.4 Drummer Front View

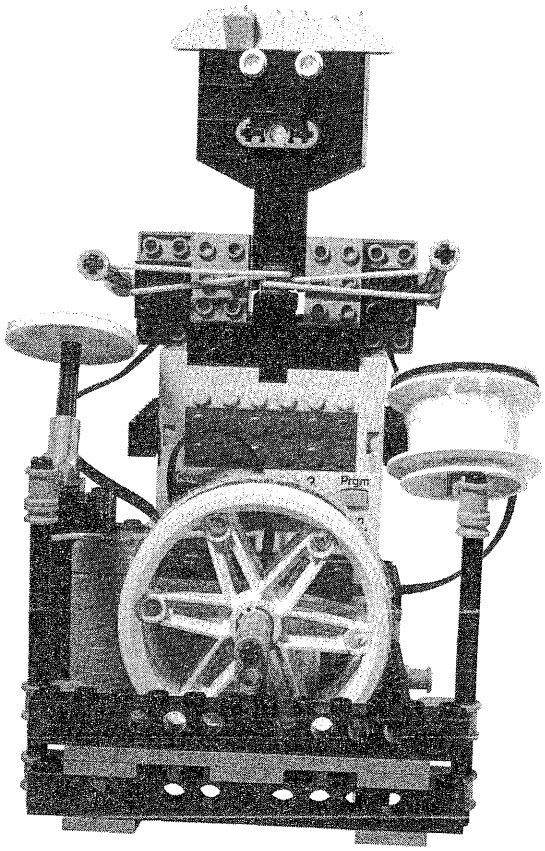

Two 16 long beams run vertically across the back of the robot, supporting the motors and the RCX (Figure 21.5).

DOCKET ALARM

Explore Litigation Insights

Docket Alarm provides insights to develop a more informed litigation strategy and the peace of mind of knowing you're on top of things.

Real-Time Litigation Alerts

Keep your litigation team up-to-date with **real-time alerts** and advanced team management tools built for the enterprise, all while greatly reducing PACER spend.

Our comprehensive service means we can handle Federal, State, and Administrative courts across the country.

Advanced Docket Research

With over 230 million records, Docket Alarm's cloud-native docket research platform finds what other services can't. Coverage includes Federal, State, plus PTAB, TTAB, ITC and NLRB decisions, all in one place.

Identify arguments that have been successful in the past with full text, pinpoint searching. Link to case law cited within any court document via Fastcase.

Analytics At Your Fingertips

Learn what happened the last time a particular judge, opposing counsel or company faced cases similar to yours.

Advanced out-of-the-box PTAB and TTAB analytics are always at your fingertips.

API

Docket Alarm offers a powerful API (application programming interface) to developers that want to integrate case filings into their apps.

LAW FIRMS

Build custom dashboards for your attorneys and clients with live data direct from the court.

Automate many repetitive legal tasks like conflict checks, document management, and marketing.

FINANCIAL INSTITUTIONS

Litigation and bankruptcy checks for companies and debtors.

E-DISCOVERY AND LEGAL VENDORS

Sync your system to PACER to automate legal marketing.