(21) File No. 199 50 884.4
(22) Filing date: 22 Oct 1999
(43) Date laid open: 26 Apr 2001

(71) Applicant:
Wella AG, 64295 Darmstadt, DE

(72) Inventor:
Nachtsheim, Markus, 64297 Darmstadt, DE;
Steigerwald, Franz, 64347 Griesheim, DE

(56) Citations:
DE 22 11 753 C3
DE 198 12 133 A1
DE 34 26 739 A1
DE 33 27 615 AI

The following information was taken from the documents submitted by the applicant

Examination request filed per § 44 Patent Act

(54) Combination packaging

(57) Combination package (1) for packaging a first and a second flowable material (2, 3), which are kept separate until their use and which are mixed together for their use, wherein the mixture (4) is removed from a closable removal opening (5). The first material (2) is held by a first package part (6) and the second material (3) is held by a second package part (7), wherein the first package part (6) is configured to be screwed onto the second package part (7). The first package part (6) is configured as an essentially rotationally symmetrical screw cap (8) and has at an upper outer side (9) the removal opening (5) and at the inner side a downwardly open cuplike container (10), which contains the first material (2) and is closed liquid-tight by means of a separation film (11) at the container rim (12). The second package part (7) is closed liquid-tight by a plug (13), which is provided with a device (15) arranged at the plug base (14) for opening the separation film (11).

The plug (13) is configured as a cup and it closes the second package part (7) firmly against axial displacement. The plug base (14) has an inclined base (16), which is provided in the edge region (17) with a predetermined breaking zone (18), which is torn off from the container rim (12) when the two package parts (6, 7) are screwed together, while between an outer side wall (19) of the ...

DE 199 50884 A1

preamble of claim 1.

Such a combination packaging is known from DE 198 12 153 Al of the applicant. It has been found that the plug 12 according to Fig. 1 cannot be placed without problem in its closure position, since this is only in a frictional locking position, which requires a precise packaging process. Nevertheless, during a mass production unwanted leakage can occur due to an imprecise fit in the locking position.

It is therefore the problem to be solved by the invention to create a combination packaging of this category in which the plug during a mass production can be easily placed in its closure position and unwanted leakage can be prevented with certainty. Furthermore, the manual mixing process should be possible with a relatively slight expenditure of force.

This problem is solved by the characterizing features of claim 1. Further advantageous embodiments of the invention will emerge from the subclaims.

The invention is explained more closely by means of two sample embodiments. There are shown:

Fig. 1 in a sectional representation a combination package with a first and a second package part as a first sample embodiment;

Fig. 2 in a perspective view the second package part;

Fig. 3 in a top view a plug with piercing element;

Fig. 4 the combination package of Fig. 1, but in a phase of bringing together the two package parts;

Fig. 5 the combination package of Fig. 4, but in a fully assembled condition, and

Fig. 6 in a side view a second sample embodiment of an assembled combination package.

Fig. 1 shows a combination package 1 for packaging a first and a second flowable material 2, 3, which are kept separate until their use and which are mixed together for their use, wherein the mixture 4 is removed from a closable removal opening 5. The first material 2 is held by a first separate package part 6 and the second material 3 is held by a second separate package part 7. The first package part 6 is configured to be screwed onto the second package part 7, wherein the first package part 6 is configured as an essentially rotationally symmetrical screw cap 8 and has at an upper outer side 9 the removal opening 5 and at the inner side a downwardly open cuplike container 10, which contains the first material 2 and is closed liquid-tight by means of a separation film 11 at the container rim 12. The second package part 7 is closed liquid-tight by a plug 13, which is provided with a device 15 arranged at the plug base 14 for opening the separation film 11. The plug 13 is configured with a sealing collar 32 so that it closes the second package part 7 firmly against axial displacement. The plug base 14 is recessed and it has an inclined base 16, which is provided in the edge region 17 with a predetermined breaking zone 18, which is torn off from the container rim 12 when the two package parts 6, 7 are screwed together (internal thread The inclined base 16 has an angle of inclination of around 8 degrees, so that there is a relatively short path for the separation of the plug base 14. Because

the piercing element 22 is not taller than an upper edge height 28 of the plug 13, it is ensured that the piercing element 22 only comes into contact with the separation film 11 after the liquid-tight connection 21 is produced. Until the time of removal of the mixture 4, the opening 5 remains closed by a cap 30. The first and the second package part 6, 7 are separated until use, for example, arranged alongside each other in a folded box (not shown). The two package parts 6, 7 economically consist of plastic. The first material 2 is a powderlike product 25 and the second material 3 is a liquid product 26, while the mixture 4 is a cosmetic product, especially a cosmetic hair product such as a two-component permanent wave cosmetic. The screw cap 8 is provided with an internal thread 27 of larger diameter than the diameter of the container rim 12 of the cuplike container 10, while the separation film 11 has a diameter such that it is centrally guided by the internal thread 27 when placed on the cuplike container 10 for the closing (sealing). The removal opening 5 is closed by means of a cap 30 until the removal of the mixed materials 2, 3. The separation film 11 is weldable composite material of plastic and metal (e.g., aluminum), with the metal side arranged toward the piercing element 22 and it is welded to the container rim 12 by a usual welding method (such as ultrasound welding). This produces a better piercing behavior of the separation film 11. When the user brings the parts together, a distinct opening or activation noise can be heard and thus the activation can be determined. This noise is adjustable in its loudness by the toughness or brittleness of the plastic material. The producing of a predetermined breaking zone 18 is a tool-dependent and defined situation, while a plug 13 in a locking position is dependent on many tolerances. The plug 13 is easier to position by its inclined base 14 with predetermined breaking zone 18 than a plug which has to be placed in a locking position. The plug 13 with the predetermined breaking zone 18 is a tool-related piece as well as a defined use in the bottle neck, which is easy to install and has the least tolerance dependencies.

Fig. 2 and 3 show more clearly the cross-shaped piercing element 22. Preferably, the piercing element 22 is joined to the plug 13 as a single piece and is provided as an injection molded plastic part.

In order to bring the two package parts 6, 7 together to produce a mixture 4 of the two materials 2, 3, the first package part 6 is screwed onto the second package part 7, so that in the course of the screwing on at first a liquid-tight connection 21 occurs between the outer side wall 19 of the cuplike container 10 and the inner side wall 20 of the plug 13. Next, the separation film 11 is pierced by the piercing element 22, which is shown in Fig. 4. After this, the container rim 12 of the container 10 reaches the upper region 31 of the

from the container rim 14, which is shown by Fig. 5, whereupon the plug base 14 drops downward and the separation film 11 is opened entirely on top, so that the material 2 from the container 10 flows onto the material 3 and by manual shaking of the combination package 1 a ready to use mixture 4 is produced, which can be removed through the opening 5 by taking of the cap 30.

A second sample embodiment of a combination container 1.1 is shown in Fig. 6, where the two package parts 6, 7 are also joined together as a package unit 23 prior to use, and a familiar tear-off safety device 24 prevents an unintentional mixing of the two materials 2, 3.

List of reference symbols

1,1.1 Combination package
2 First material
3 Second material
4 Mixture
5 Removal opening
6 First package part
7 Second package part
8 Screw cap
9 Upper outer side
10 Cuplike container
11 Separation film
12 Container rim
13 Plug
14 Plug base
15 Device
16 Inclined base
17 Edge region
18 Predetermined breaking zone
19 Outer side wall
20 Inner side wall
21 Liquid-tight connection
22 Piercing element
23 Package unit
24 Safety device
25 Powderlike product
26 Liquid product
27 Internal thread
28 Rim height/plug 13
29 External thread
30 Cap
31 Upper region
32 Sealing collar

Patent claims

1. Combination package (1) for packaging a first and a second flowable material (2, 3), which are kept separate until their use and which are mixed together for their use, wherein the mixture (4) is removed from a closable removal opening (5), the first material (2) is held by a first package part (6) and the second material (3) is held by a second package part (7), the first package part (6) is configured to be screwed onto the second package part (7), wherein the first package part (6) is configured as an essentially rotationally symmetrical screw cap (8) and has at an upper outer side (9) the removal opening (5) and at the inner side a second package part (7) is closed liquid-tight by a plug (13), which is provided with a device (15) arranged at the plug base (14) for opening the separation film (11), **characterized in that** the plug (13) is configured as a cup and it closes the second package part (7) firmly against axial displacement, the plug base (14) has an inclined base (16), which is provided in the edge region (17) with a predetermined breaking zone (18), which is torn off from the container rim (12) when the two package parts (6, 7) are screwed together, while between an outer side wall (19) of the cuplike container (10) and an inner side wall (20) of the plug (13) there is a liquid-tight connection (21).

2. Package according to claim 1, characterized in that the device (15) is outfitted as a cross-shaped piercing element (22).

3. Package according to claim 2, characterized in that the piercing element (22) is not taller than an upper rim height (28) of the plug (13).

4. Package according to claim 1, characterized in that the inclined base (16) of the plug base (14) has an angle of inclination of around 8 degrees.

5. Package according to claim 1, characterized in that the first and the second package part are separate until use.

6. Package according to claim 1, characterized in that the first and the second package part (6, 7) are also joined together as a package unit (23) until use.

7. Package according to claim 6, characterized in that a safety device (24) prevents an unintentional mixing of the two materials (2, 3).

8. Package according to claim 1, characterized in that the first and the second package part (6, 7) consist of plastic.

9. Package according to claim 1, characterized in that the first material (2) is a powderlike product (25) and the second material (3) a liquid product (26).

10. Package according to claim 1 and/or claim 8, characterized in that the mixture (4) of the two materials (2, 3) is a cosmetic product.

11. Package according to claim 10, characterized in that the cosmetic product is a permanent hair waving cosmetic.

12. Package according to claim 1, characterized in that the screw cap (8) is provided with an internal thread (27) of larger diameter than the diameter of the container rim (12) of the cuplike container (10), while the separation film (11) has a diameter such that, when placed on the cuplike container (10), it is guided by the internal thread (27) for the opening process.

Plus 4 page(s) of drawings

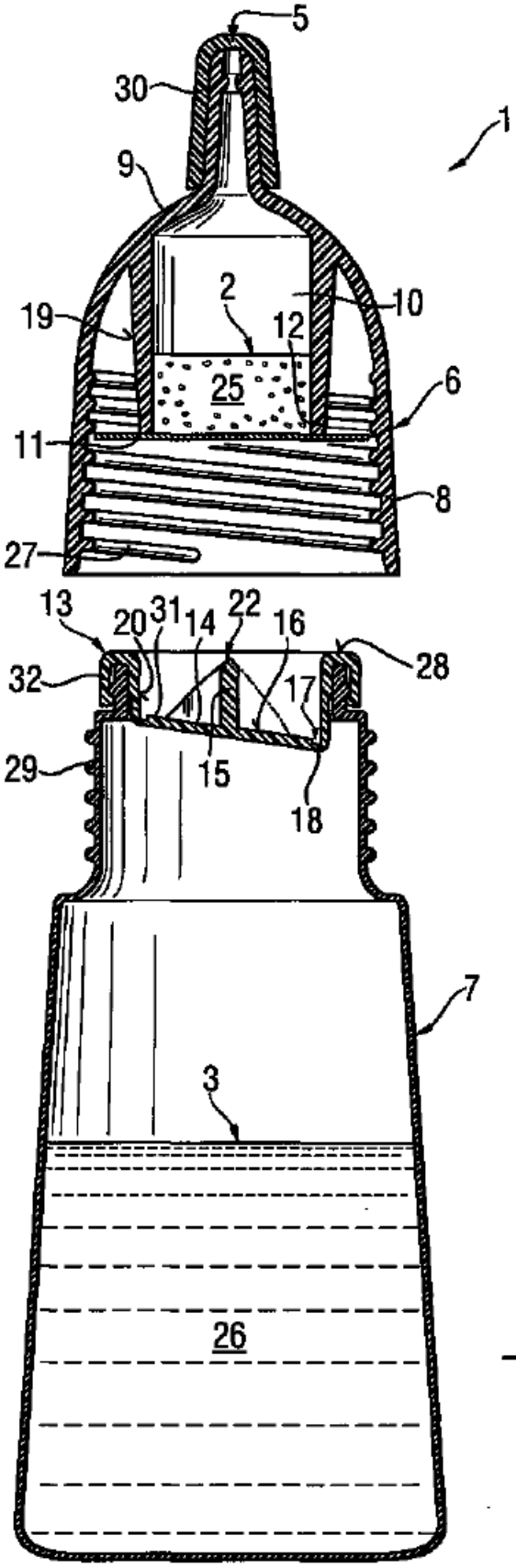

Fig. 1

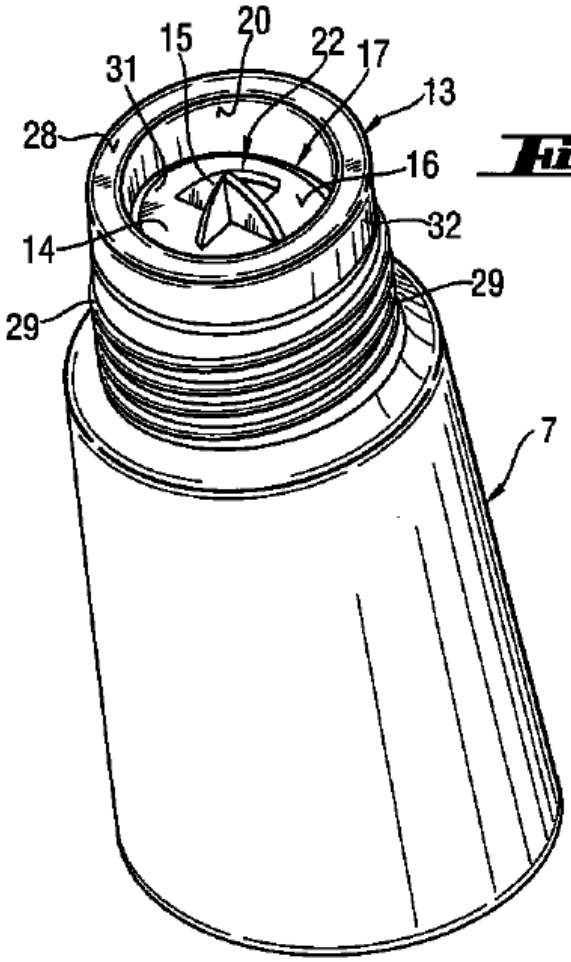

Fig. 2

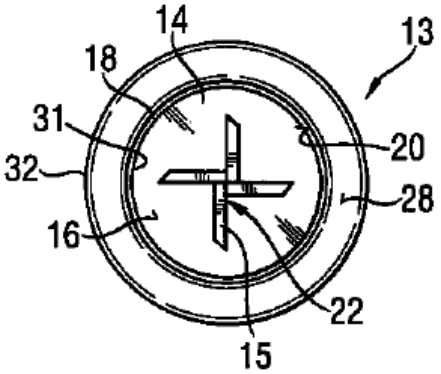

Fig. 3

DOCKET ALARM

Explore Litigation Insights

Docket Alarm provides insights to develop a more informed litigation strategy and the peace of mind of knowing you're on top of things.

Real-Time Litigation Alerts

Keep your litigation team up-to-date with **real-time alerts** and advanced team management tools built for the enterprise, all while greatly reducing PACER spend.

Our comprehensive service means we can handle Federal, State, and Administrative courts across the country.

Advanced Docket Research

With over 230 million records, Docket Alarm's cloud-native docket research platform finds what other services can't. Coverage includes Federal, State, plus PTAB, TTAB, ITC and NLRB decisions, all in one place.

Identify arguments that have been successful in the past with full text, pinpoint searching. Link to case law cited within any court document via Fastcase.

Analytics At Your Fingertips

Learn what happened the last time a particular judge, opposing counsel or company faced cases similar to yours.

Advanced out-of-the-box PTAB and TTAB analytics are always at your fingertips.

API

Docket Alarm offers a powerful API (application programming interface) to developers that want to integrate case filings into their apps.

LAW FIRMS

Build custom dashboards for your attorneys and clients with live data direct from the court.

Automate many repetitive legal tasks like conflict checks, document management, and marketing.

FINANCIAL INSTITUTIONS

Litigation and bankruptcy checks for companies and debtors.

E-DISCOVERY AND LEGAL VENDORS

Sync your system to PACER to automate legal marketing.