【図１１】

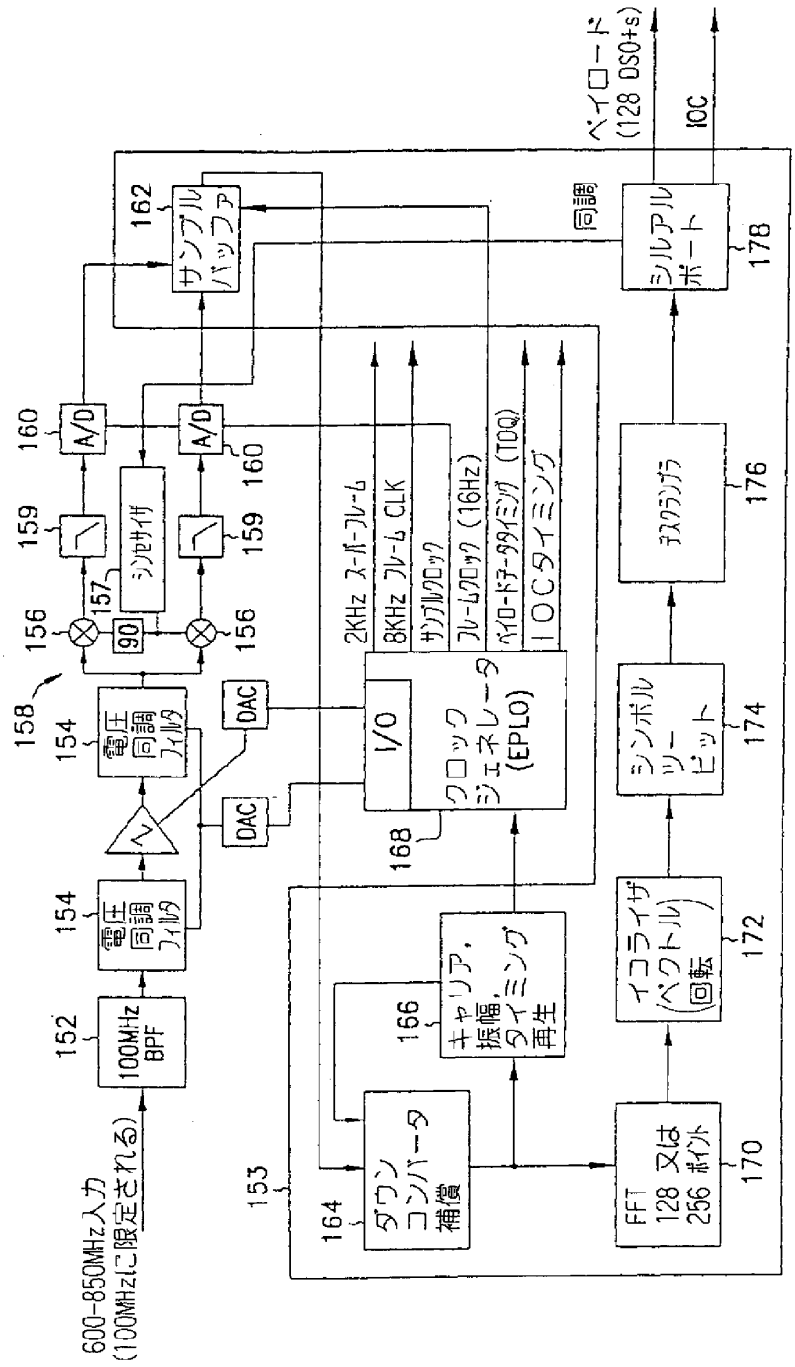
600-850MHz入力
(100MHzに限定される)
100MHz BPF
電圧同調フィルタ
電圧同調フィルタ
DAC
DAC
I/O
クロックジェネレータ (EPLO)
2KHz スーパーフレーム
8KHz フレーム CLK
サンプルクロック
フレームクロック (16Hz)
ペイロードタイミング (TOQ)
IOCタイミング
シンセサイザ
90
A/D
A/D
サンプルバッファ
同調
シリアルポート
ペイロード
(128 DS0+s)
IOC
ディスクランブラ
シンボルツービット
イコライザ (ベクトル回転)
FFT 128 又は 256 ポイント
ダウンコンバータ補償
キャリア，振幅，タイミング再生
153
152
154
154
156
156
157
158
159
159
160
160
162
164
166
168
170
172
174
176
178

FIG. 11

【図１２】

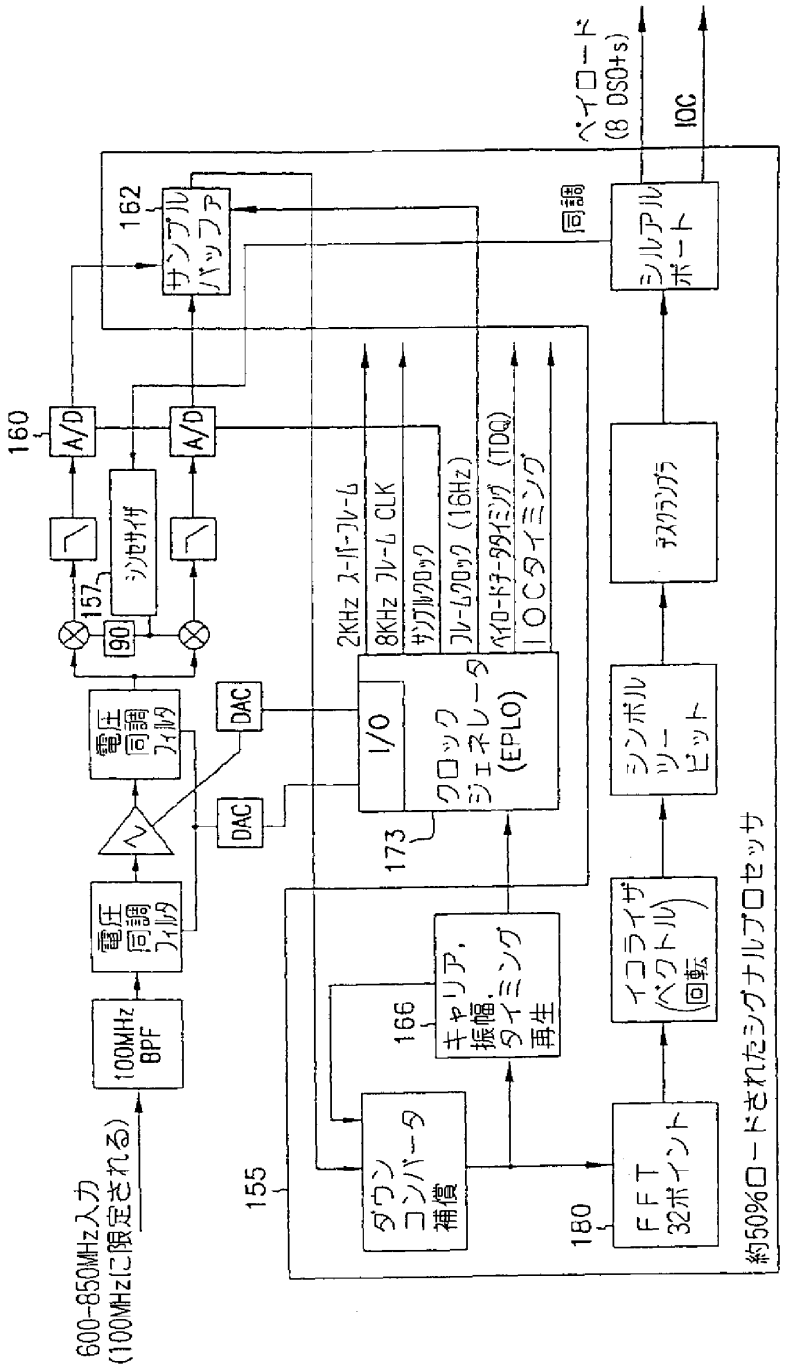
600-850MHz入力
(100MHzに限定される)
100MHz BPF
電圧同調フィルタ
電圧同調フィルタ
DAC
DAC
160
A/D
A/D
157
90
シンセサイザ
162
サンプルバッファ
2KHz スーパーフレーム
8KHz フレーム CLK
サンプルクロック
フレームクロック (16Hz)
ペイロードデータタイミング (TDQ)
IOCタイミング
I/O
クロックジェネレータ (EPLO)
173
166
キャリア，振幅，タイミング再生
155
ダウンコンバータ補償
180
FFT 32ポイント
イコライザ（ベクトル回転）
シンボルツービット
チェンジング
同調
シリアルポート
ペイロード (8 DS0+s)
IOC
約50%ロードされたシグナルプロセッサ

FIG. 12

【図１３】

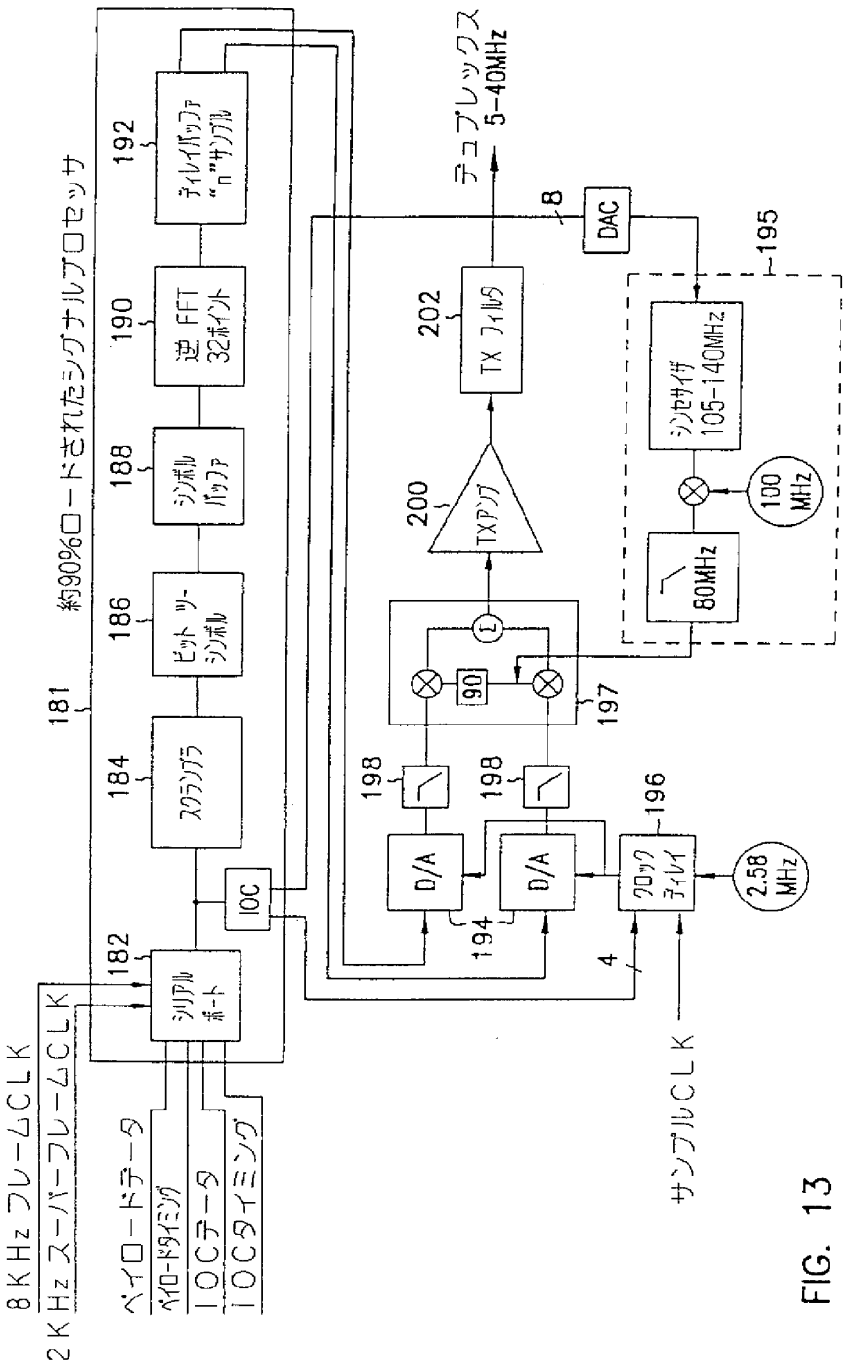
8KHz フレームCLK
2KHz スーパーフレームCLK
ペイロードデータ
ペイロードタイミング
IOCデータ
IOCタイミング
約90%ロードされたシグナルプロセッサ
181
182
シリアルポート
IOC
184
スクランブラ
186
ビット ツー シンボル
188
シンボル バッファ
190
逆 FFT 32ポイント
192
テイルバッファ "n"サンプル
テコプレックス 5-40MHz
8
DAC
195
202
TX フィルタ
200
TXアンプ
シンセサイザ 105-140MHz
100 MHz
80MHz
197
90
198
198
D/A
D/A
194
196
ブロック テイレイ
2.58 MHz
4
サンプルCLK

FIG. 13

【図14】

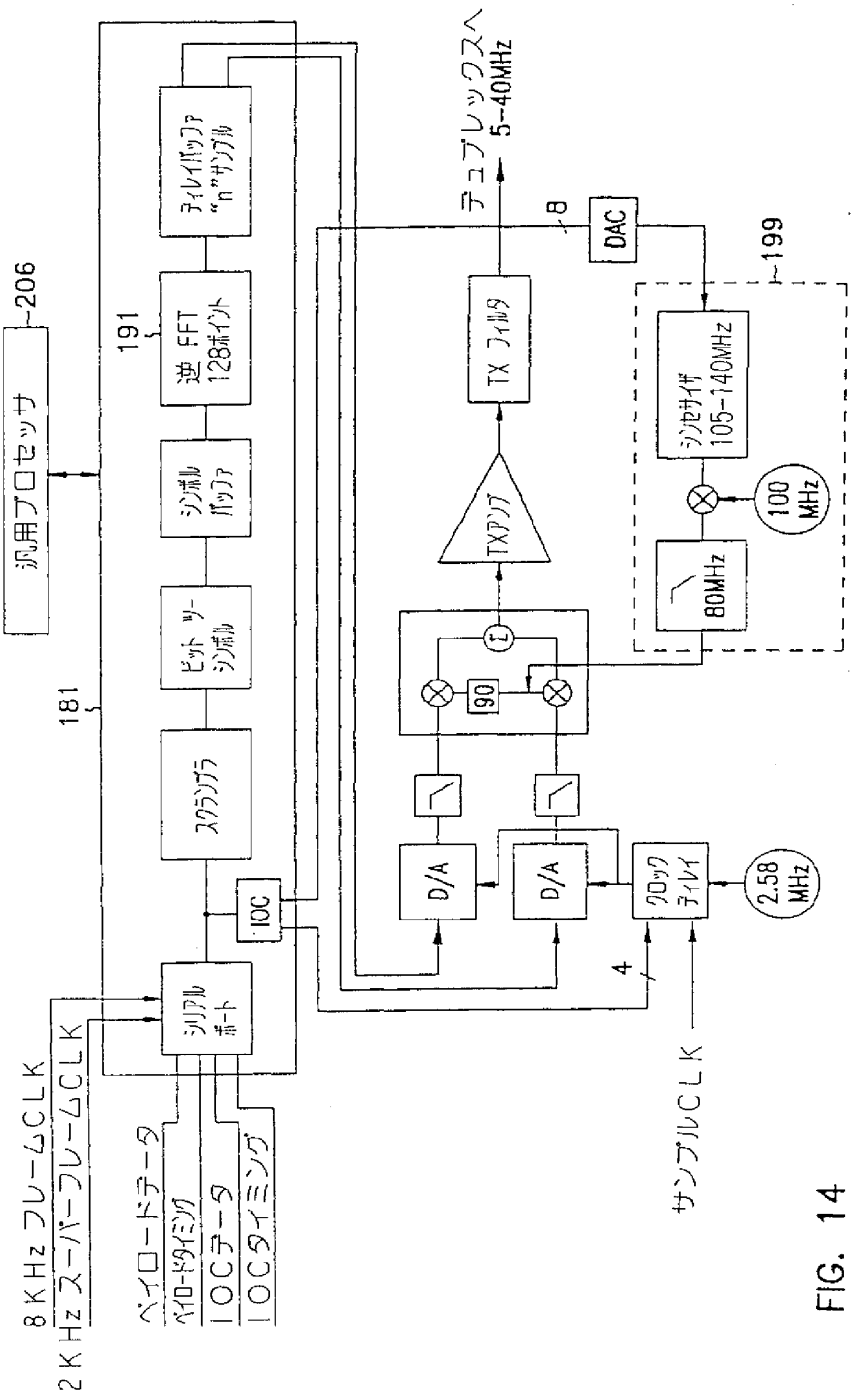
汎用プロセッサ
206
191
181
逆 FFT 128ポイント
ディレイバッファ "n"サンプル
シンボル バッファ
ビット ツー シンボル
スクランブラ
IOC
シリアル ポート
8 KHz フレームCLK
2 KHz スーパーフレームCLK
ペイロードデータ
ペイロードタイミング
IOCデータ
IOCタイミング
テュブレックスへ 5-40MHz
8
DAC
199
TX フィルタ
TXアンプ
シンセサイザ 105-140MHz
100 MHz
80MHz
90
D/A
D/A
プログラマブル ディバイダ
2.58 MHz
4
サンプルCLK

FIG. 14

【図１５】

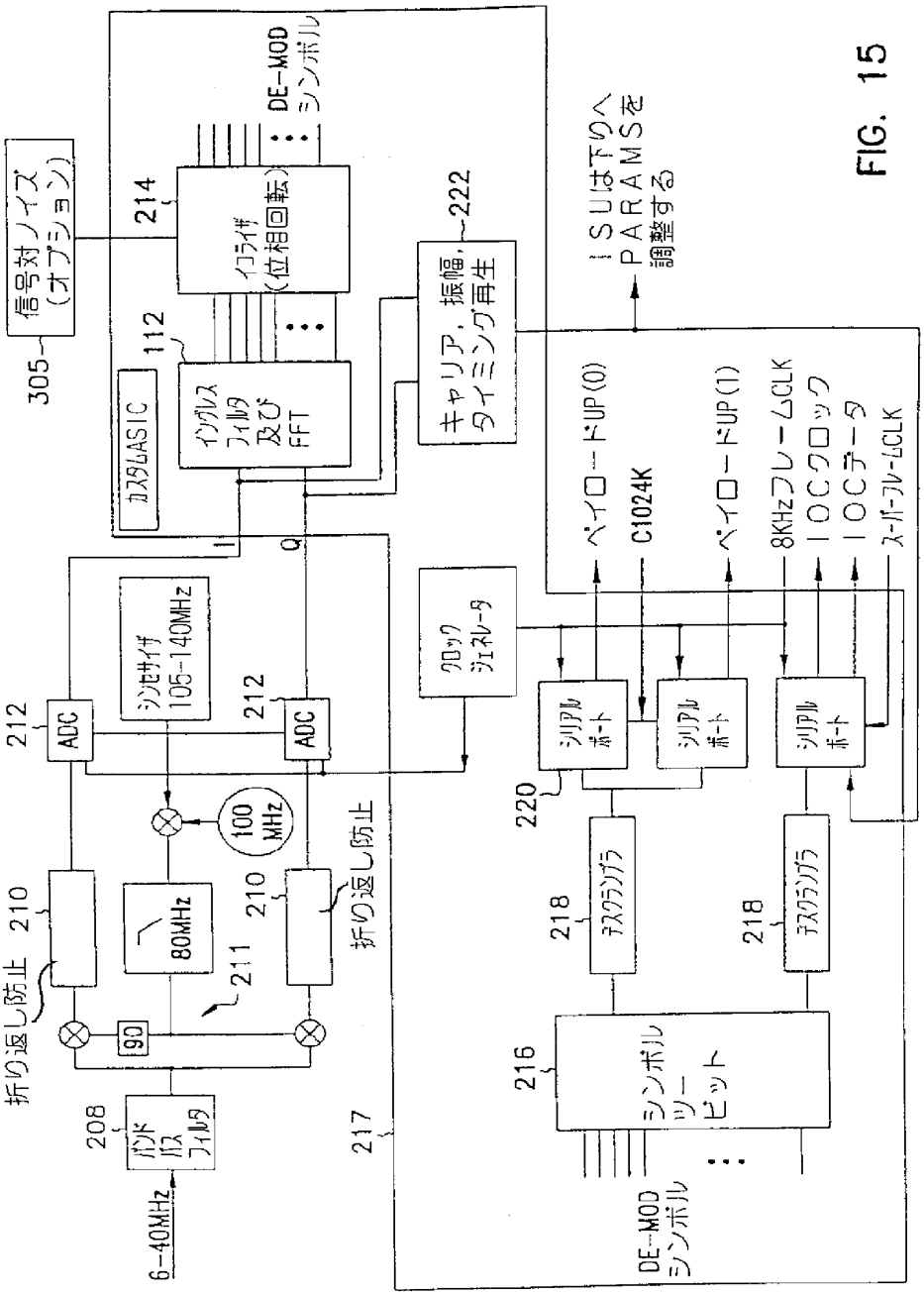
信号対ノイズ（オプション）
305
DE-MOD シンボル
214
イコライザ（位相回転）
112
カスタムASIC
インパルス フィルタ及び FFT
キャリア，振幅，タイミング再生
222
ISUは下りへ PARAMSを調整する
ペイロードUP(0)
C1024K
ペイロードUP(1)
8KHzフレームCLK
IOCクロック
IOCデータ
スーパーフレームCLK
シンセサイザ 105-140MHz
212
ADC
212
ADC
クロック ジェネレータ
100 MHz
80MHz
210
折り返し防止
210
折り返し防止
211
90
208
バンド パス フィルタ
6-40MHz
217
シリアル ポート
シリアル ポート
シリアル ポート
220
218
デスクランブラ
218
デスクランブラ
216
シンボル ツー ビット
DE-MOD シンボル

FIG. 15

【図１６】

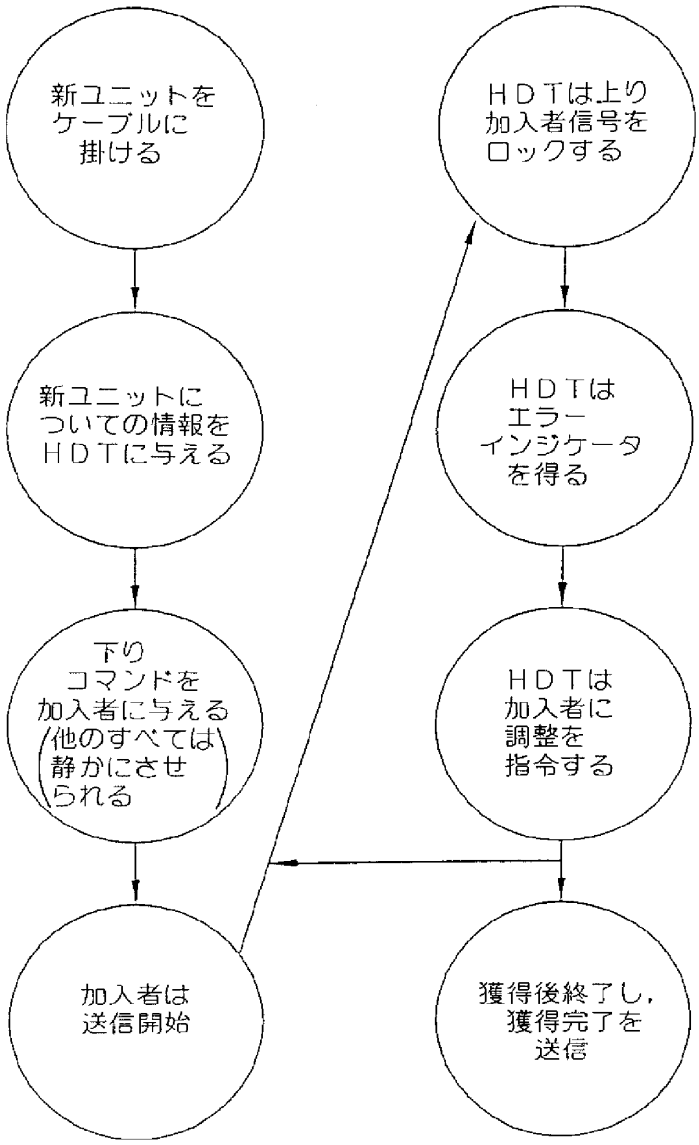
新ユニットを
ケーブルに
掛ける
新ユニットに
ついての情報を
ＨＤＴに与える
下り
コマンドを
加入者に与える
(他のすべては
静かにさせ
られる)
加入者は
送信開始
ＨＤＴは上り
加入者信号を
ロックする
ＨＤＴは
エラー
インジケータ
を得る
ＨＤＴは
加入者に
調整を
指令する
獲得後終了し，
獲得完了を
送信

FIG. 16

【図１７】

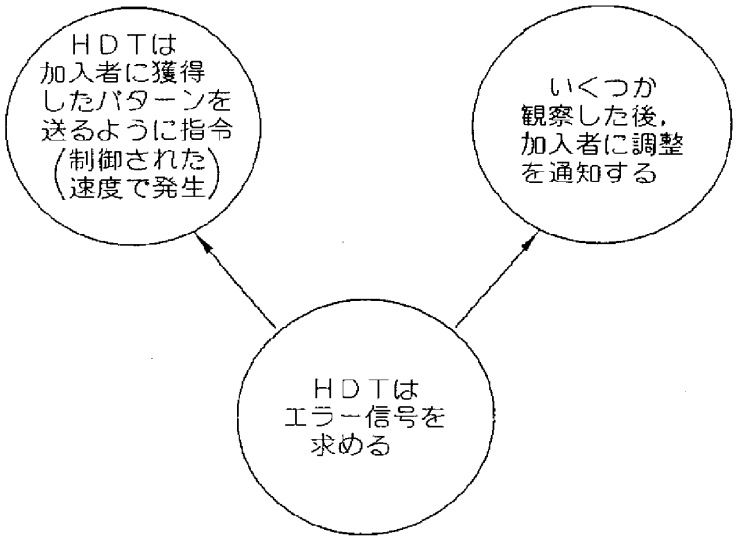
ＨＤＴは
加入者に獲得
したパターンを
送るように指令
（制御された
速度で発生）
いくつか
観察した後，
加入者に調整
を通知する
ＨＤＴは
エラー信号を
求める

FIG. 17

【図１８】

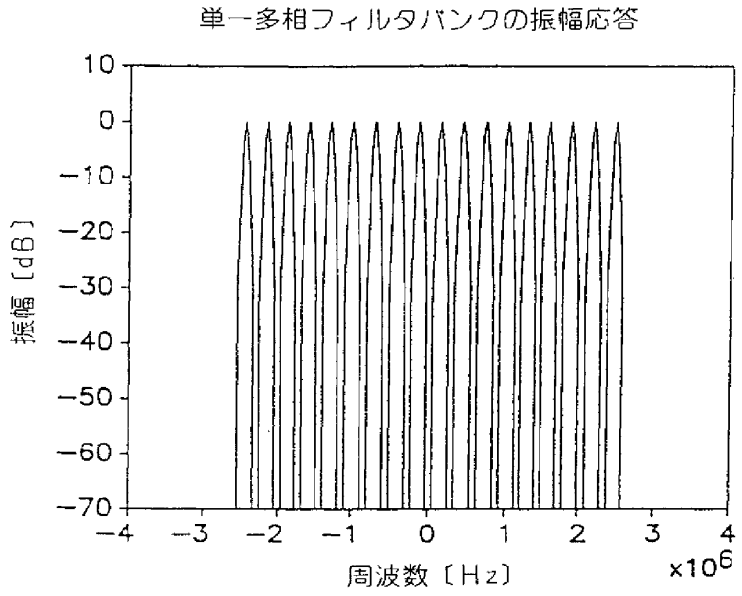
単一多相フィルタバンクの振幅応答
10
0
−10
−20
−30
−40
−50
−60
−70
振幅〔dB〕
−4
−3
−2
−1
0
1
2
3
4
周波数〔Hz〕
x10^6

FIG. 18

【図１９】

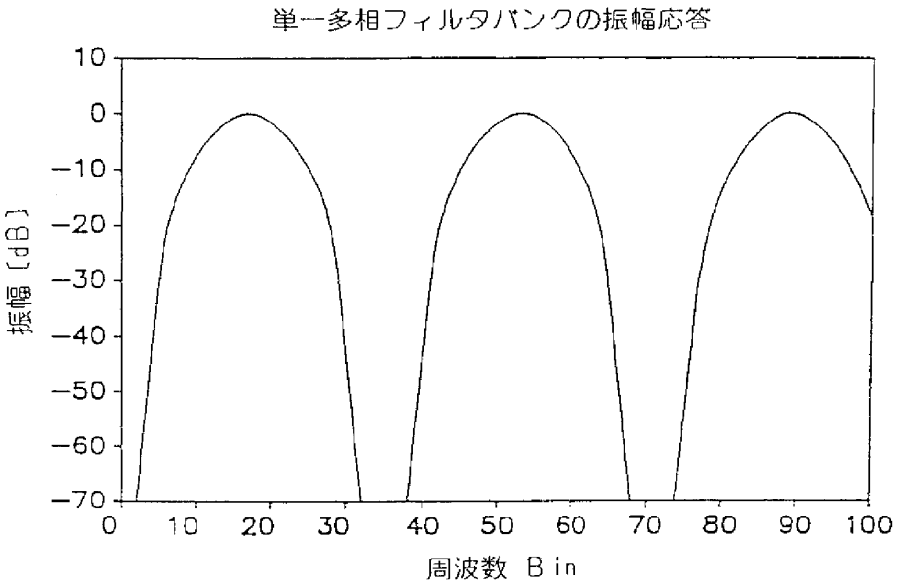
単一多相フィルタバンクの振幅応答
10
0
−10
−20
−30
−40
−50
−60
−70
振幅〔dB〕
0
10
20
30
40
50
60
70
80
90
100
周波数 Bin

FIG. 19

【図２０】

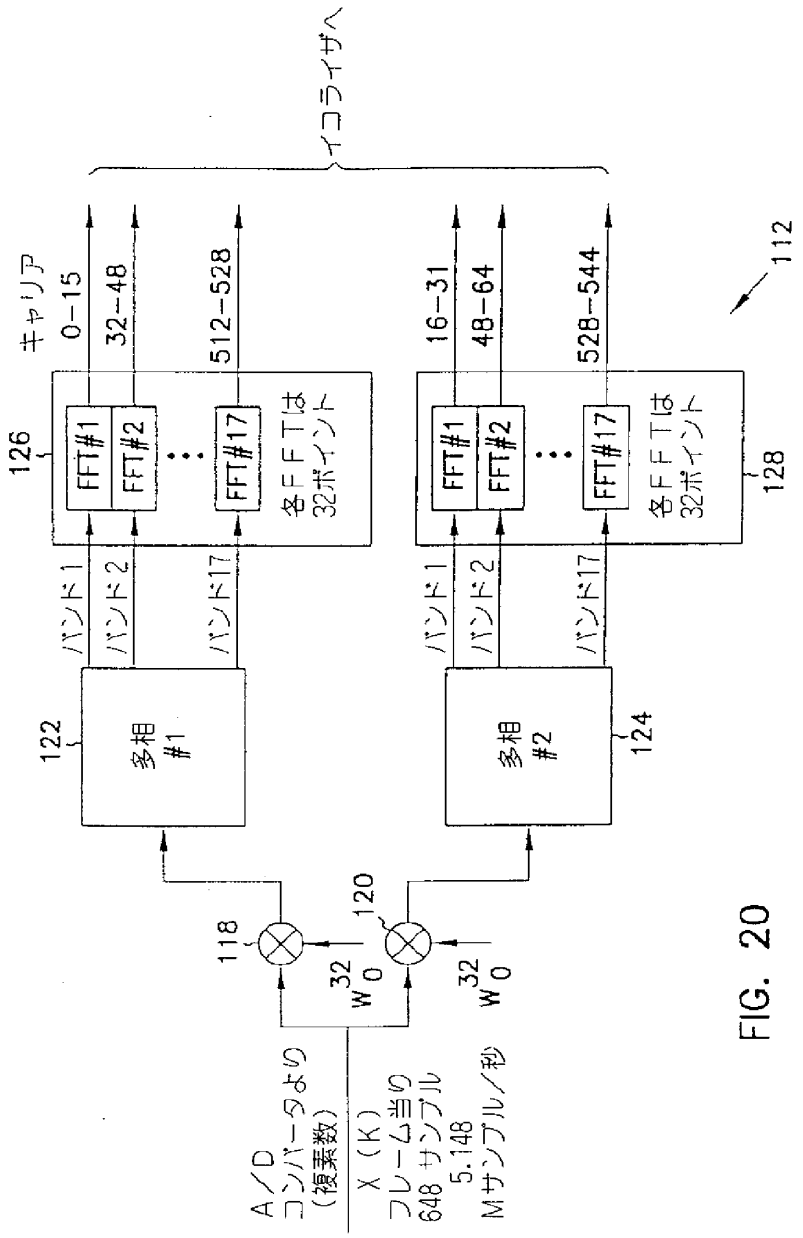
インタライザへ
キャリア
0−15
32−48
512−528
16−31
48−64
528−544
126
128
112
FFT#1
FFT#2
FFT#17
各ＦＦＴは
32ポイント
バンド1
バンド2
バンド17
122
124
多相
#1
多相
#2
118
120
W_0^{32}
W_0^{32}
A／D
コンバータより
（複素数）
X（K）
フレーム当り
648 サンプル
5.148
Mサンプル／秒

FIG. 20

【図２１】

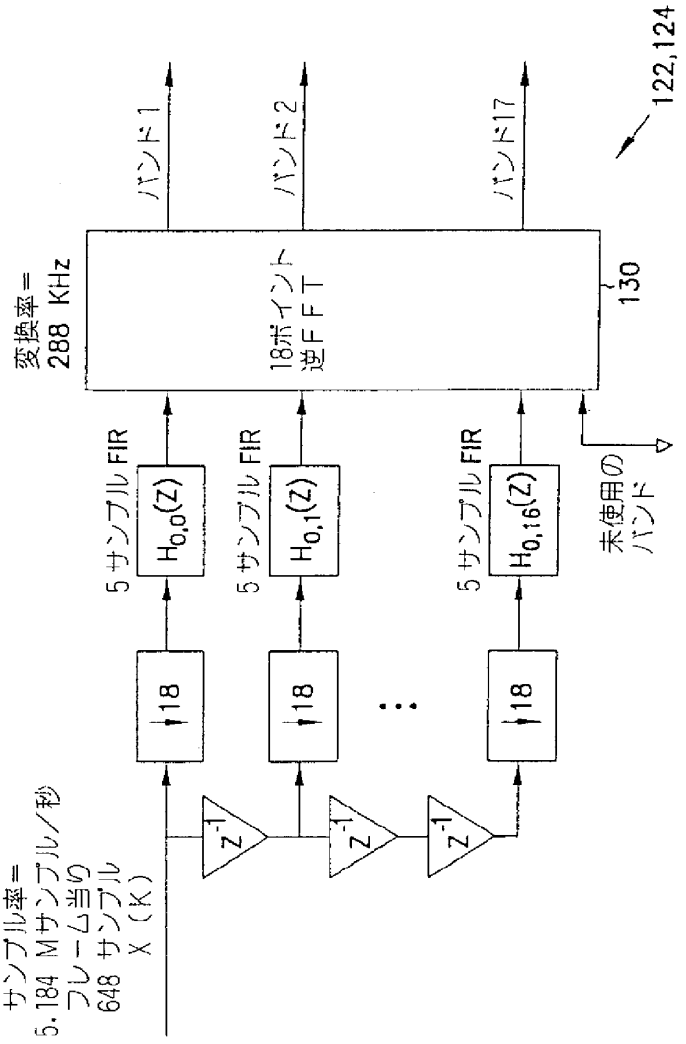
サンプル率＝
5.184 Mサンプル／秒
フレーム当り
648 サンプル
X（K）
18
18
18
z^{-1}
z^{-1}
z^{-1}
5サンプル FIR
$H_{0,0}(Z)$
5サンプル FIR
$H_{0,1}(Z)$
5サンプル FIR
$H_{0,16}(Z)$
変換率＝
288 KHz
18ポイント
逆ＦＦＴ
130
バンド1
バンド2
バンド17
未使用の
バンド
122,124

FIG. 21

【図２２】

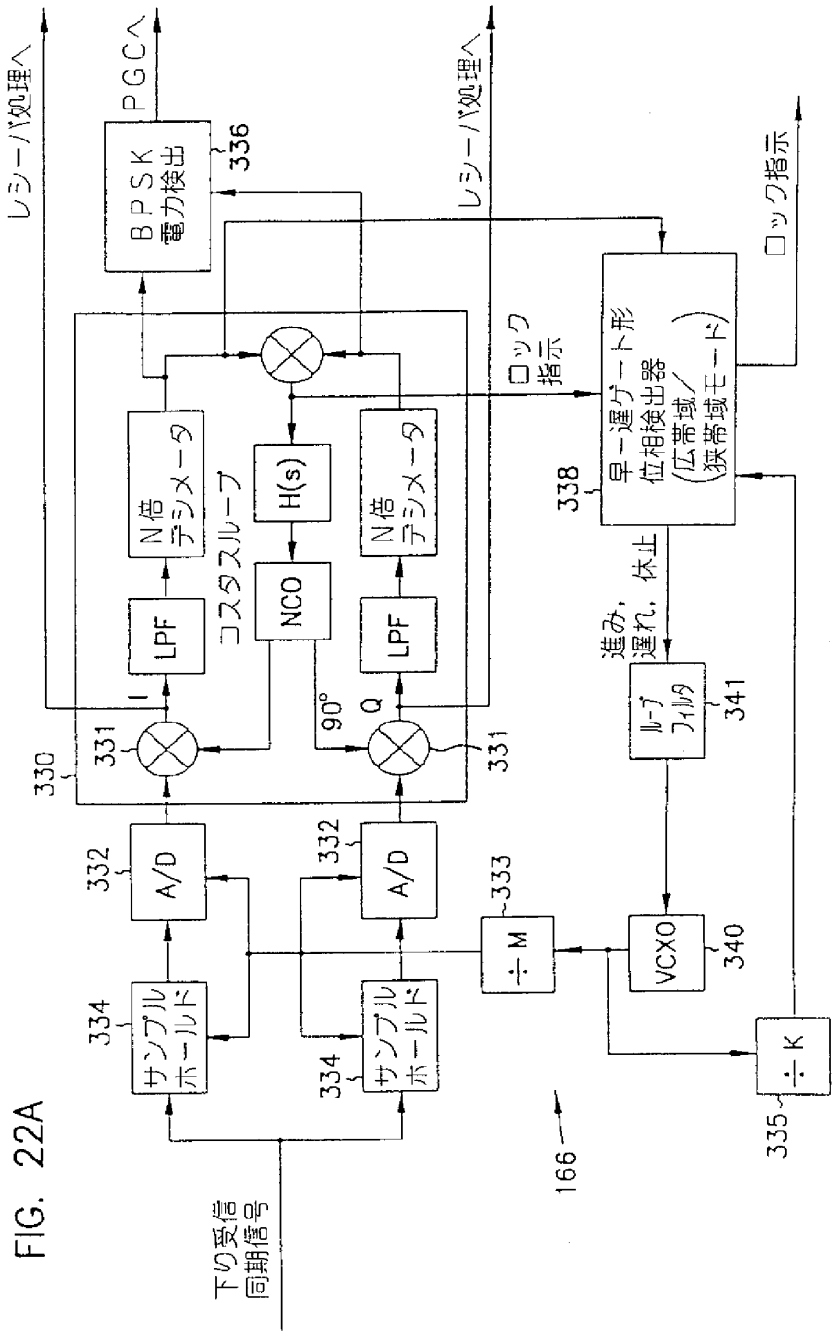
レシーバ処理へ
PGCへ
BPSK
電力検出
336
レシーバ処理へ
ロック指示
ロック指示
早－遅ゲート形
位相検出器
(広帯域／
狭帯域モード)
338
N倍
デシメータ
LPF
I
コスタスループ
H(s)
NCO
90°
Q
N倍
デシメータ
LPF
330
331
331
進み，
遅れ，休止
ループ
フィルタ
341
332
A/D
332
A/D
333
÷ M
VCXO
340
334
サンプル
ホールド
334
サンプル
ホールド
166
335
÷ K
下り受信
同期信号

FIG. 22A

【図２２】

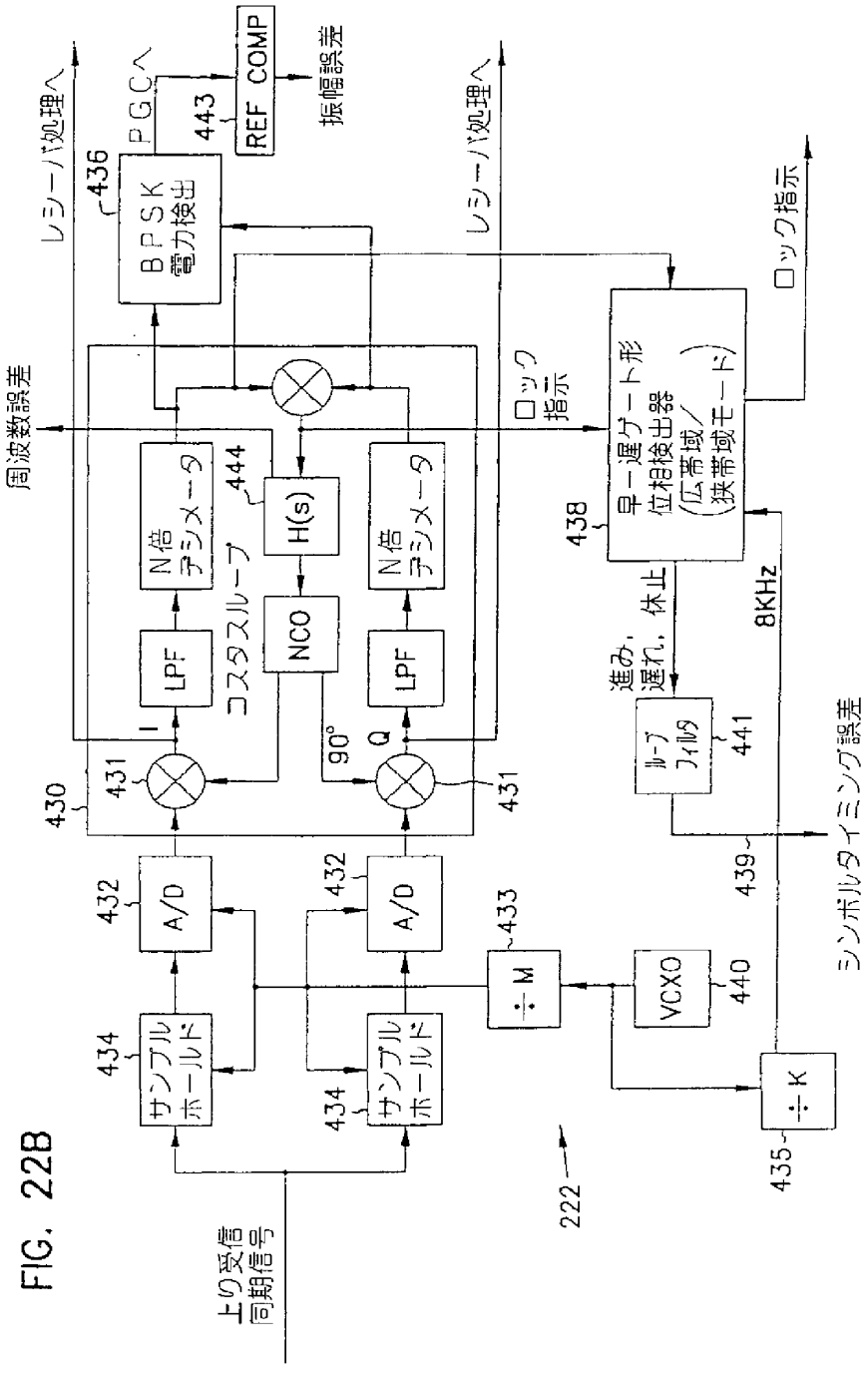
上の受信同期信号
サンプルホールド
A/D
LPF
N倍デシメータ
コスタスループ
H(s)
NCO
90°
I
Q
÷M
VCXO
÷K
ループフィルタ
早－遅ゲート形位相検出器（広帯域／狭帯域モード）
BPSK電力検出
REF COMP
PGCへ
振幅誤差
周波数誤差
ロック指示
進み，遅れ，休止
8KHz
シンボルタイミング誤差
レシーバ処理へ
222
430
431
432
433
434
435
436
438
439
440
441
443
444

FIG. 22B

【図２３】

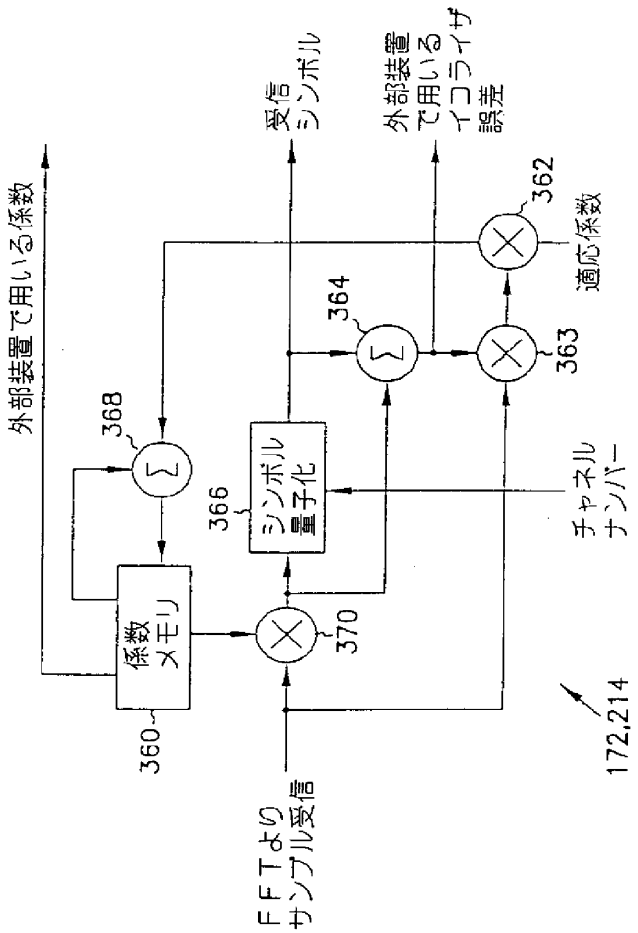
外部装置で用いる係数
受信
シンボル
外部装置
で用いる
イコライザ
誤差
362
適応係数
364
363
368
366
シンボル
量子化
チャネル
ナンバー
係数
メモリ
370
360
172,214
FFTより
サンプル受信

FIG. 23

【図２４】

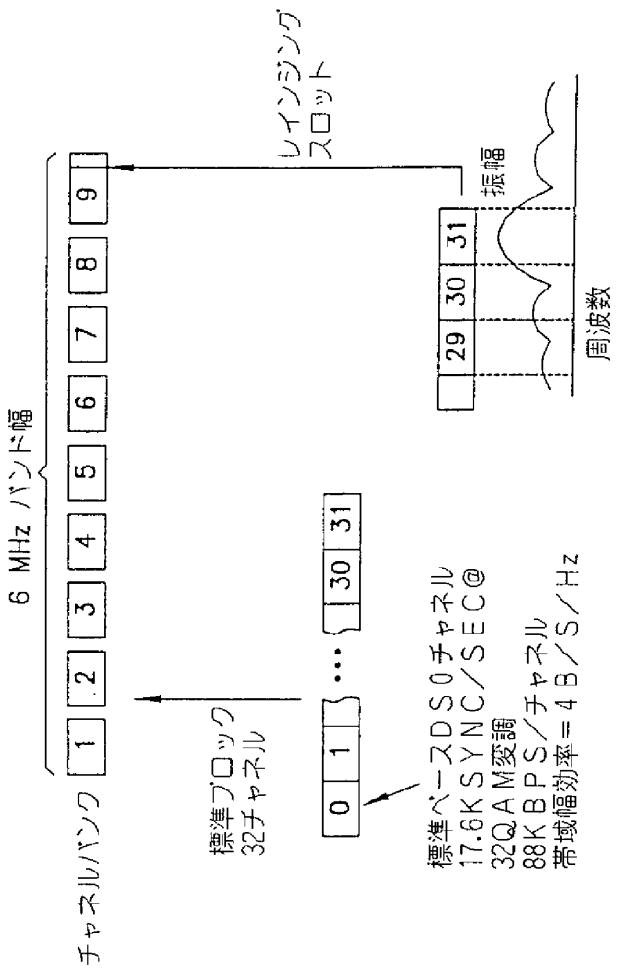
6 MHz バンド幅
チャネルバンク
1
2
3
4
5
6
7
8
9
標準ブロック
32チャネル
0
1
30
31
標準ベースDS0チャネル
17.6KSYNC/SEC@
32QAM変調
88KBPS/チャネル
帯域幅効率＝4B/S/Hz
レインジング
スロット
振幅
29
30
31
周波数

FIG. 24

【図２５】

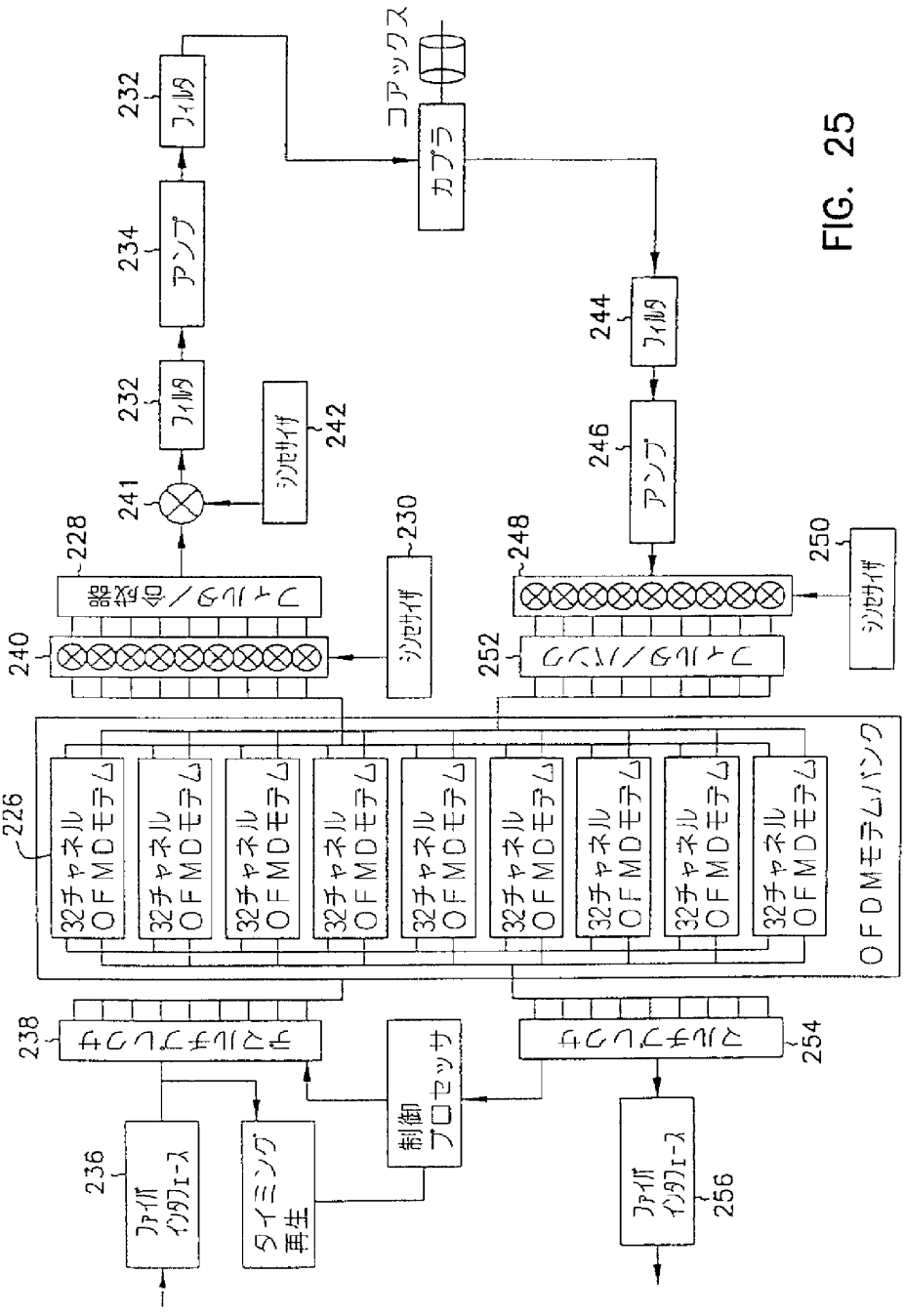
コアックス
カプラ
232
フィルタ
234
アンプ
232
フィルタ
241
シンセサイザ
242
228
コントローラ/合成器
240
230
シンセサイザ
244
フィルタ
246
アンプ
248
250
シンセサイザ
252
コントローラ/パンク
226
32チャネル OFMDモデム
OFDMモデムバンク
238
ハンドシェイクコントローラ
制御プロセッサ
254
ハンドシェイクコントローラ
236
ファイバインタフェース
タイミング再生
ファイバインタフェース
256

FIG. 25

【図26】

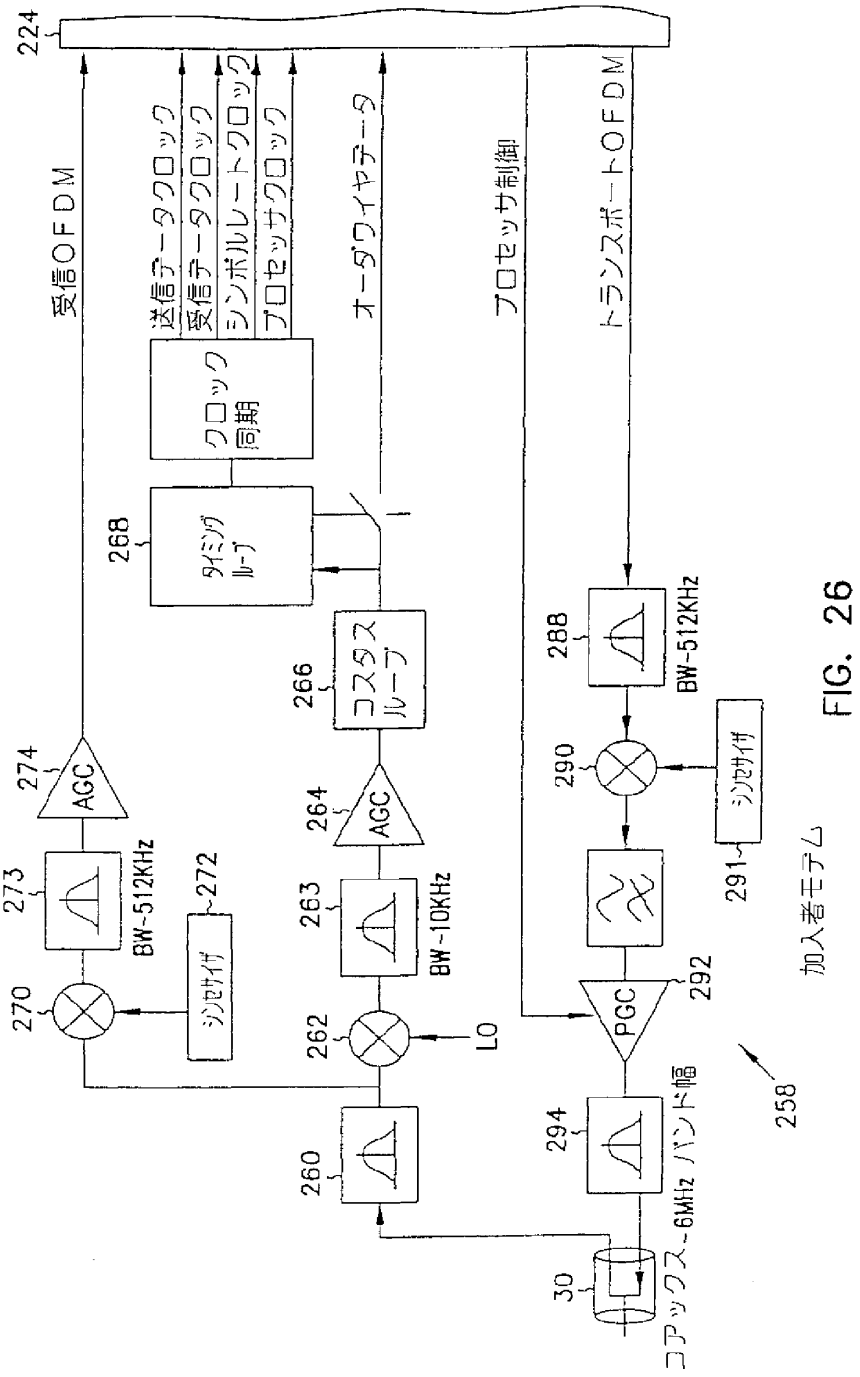
224
受信OFDM
送信データクロック
受信データクロック
シンボルレートクロック
プロセッサクロック
クロック同期
268
タイミングループ
オーダワイヤデータ
プロセッサ制御
トランスポートOFDM
266
コスタスループ
264
AGC
274
AGC
273
BW-512KHz
272
シンセサイザ
270
263
BW-10KHz
262
LO
260
288
BW-512KHz
290
シンセサイザ
291
PGC
292
294
30
コアックス-6MHz バンド幅
258
加入者モデム

FIG. 26

【図２７】

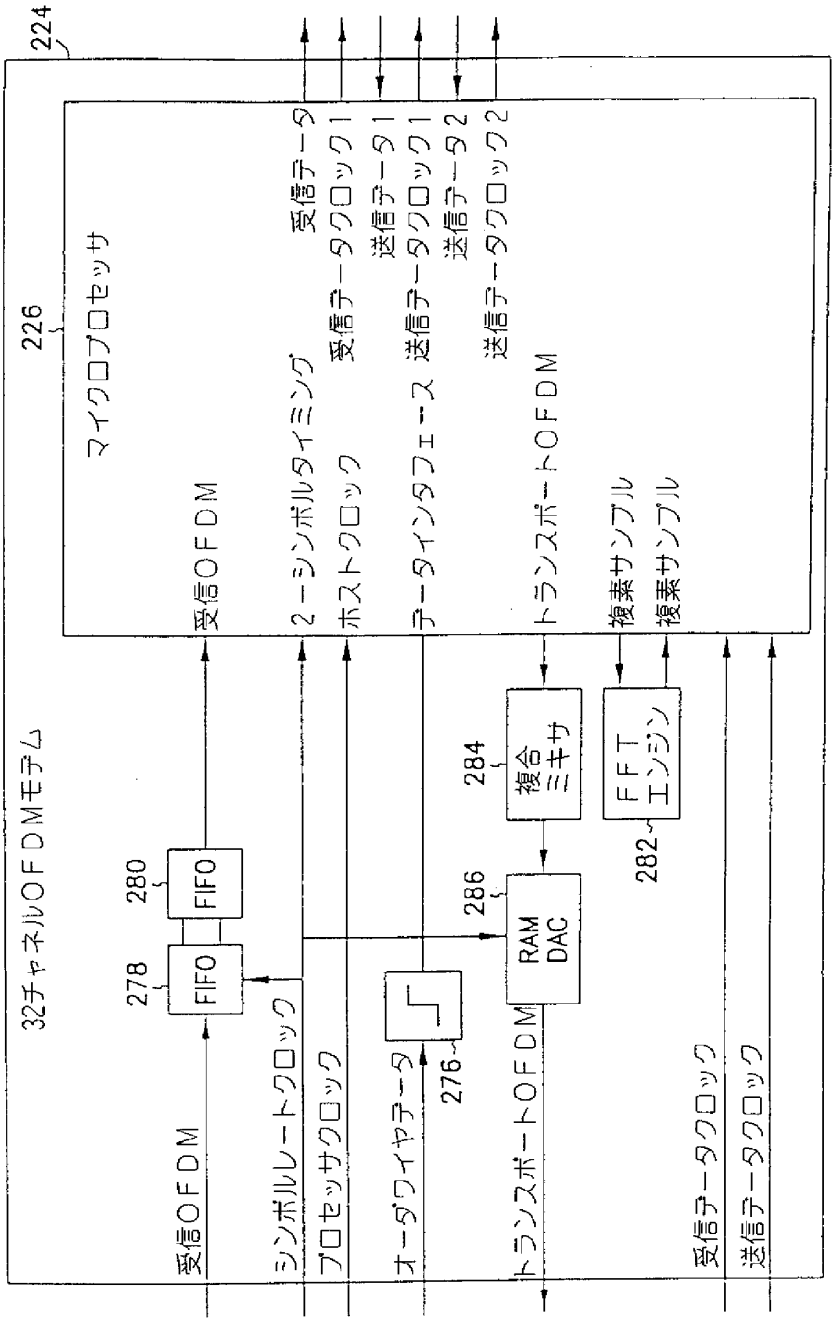
224
226
マイクロプロセッサ
受信ＯＦＤＭ
２－シンボルタイミング
ホストクロック
データインタフェース
トランスポートＯＦＤＭ
複素サンプル
複素サンプル
受信データ
受信データクロック１
送信データ１
送信データクロック１
送信データ２
送信データクロック２
32チャネルＯＦＤＭモデム
受信ＯＦＤＭ
シンボルレートクロック
プロセッサクロック
オーダワイヤデータ
トランスポートＯＦＤＭ
受信データクロック
送信データクロック
278
FIFO
280
FIFO
276
286
RAM
DAC
284
複合
ミキサ
282
ＦＦＴ
エンジン

FIG. 27

【図２８】

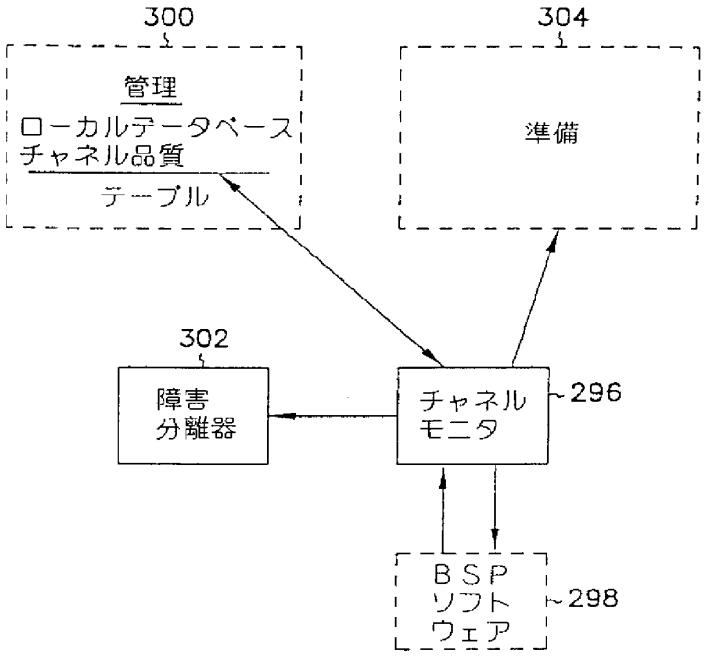
300
管理
ローカルデータベース
チャネル品質
テーブル
304
準備
302
障害
分離器
チャネル
モニタ
296
BSP
ソフト
ウェア
298

FIG. 28

【図２９Ａ】

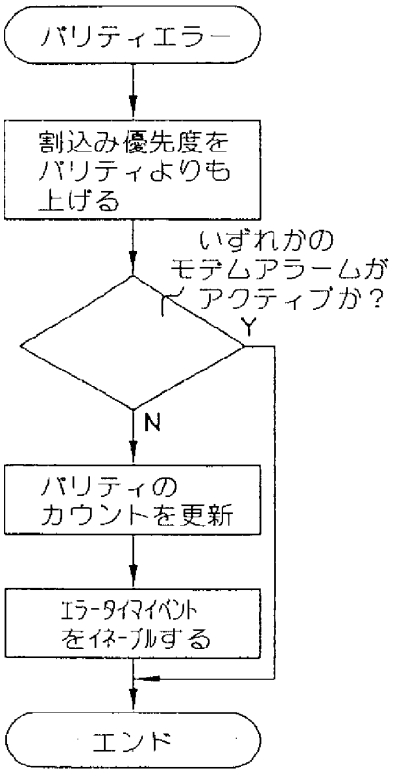
パリティエラー
割込み優先度を
パリティよりも
上げる
いずれかの
モデムアラームが
アクティブか？
Y
N
パリティの
カウントを更新
エラータイマイベント
をイネーブルする
エンド

FIG. 29A

【図２９Ｂ】

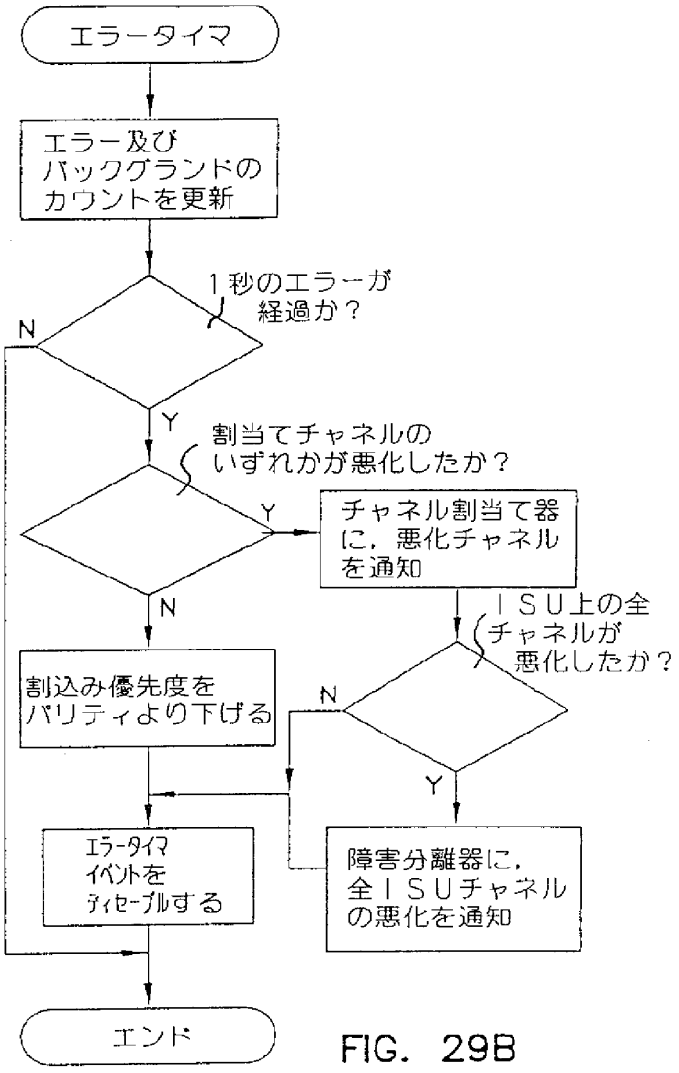
エラータイマ
エラー及び
バックグランドの
カウントを更新
1秒のエラーが
経過か？
N
Y
割当てチャネルの
いずれかが悪化したか？
Y
チャネル割当て器
に，悪化チャネル
を通知
N
ＩＳＵ上の全
チャネルが
悪化したか？
割込み優先度を
パリティより下げる
N
Y
エラータイマ
イベントを
ディセーブルする
障害分離器に，
全ＩＳＵチャネル
の悪化を通知
エンド

FIG. 29B

【図２９Ｃ】

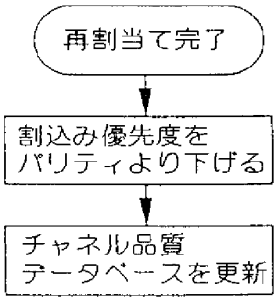

FIG. 29C

【図２９】

FIG. 29D

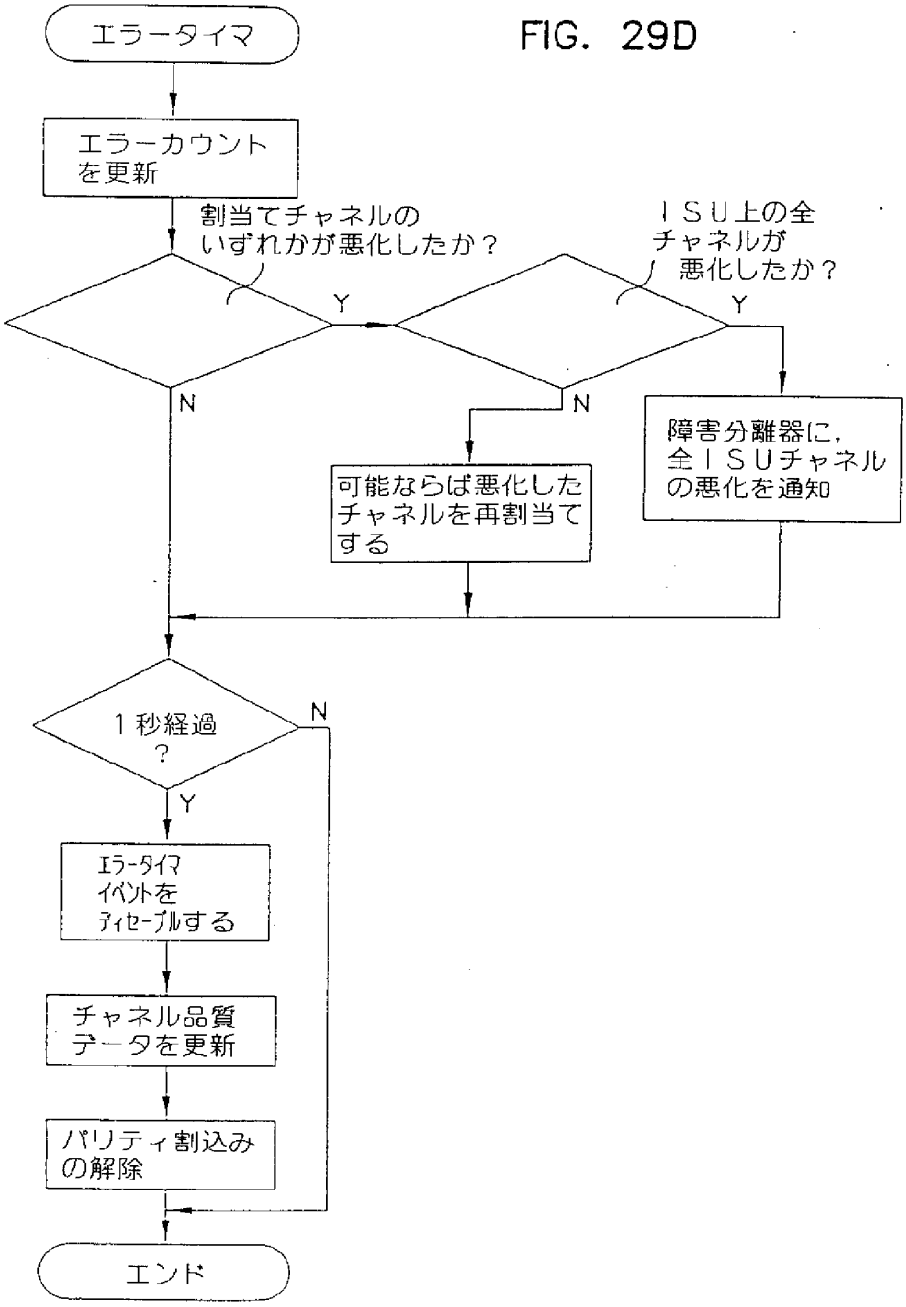
エラータイマ
エラーカウントを更新
割当てチャネルのいずれかが悪化したか？
Y
N
ＩＳＵ上の全チャネルが悪化したか？
Y
N
障害分離器に，全ＩＳＵチャネルの悪化を通知
可能ならば悪化したチャネルを再割当てする
１秒経過？
N
Y
ｴﾗｰﾀｲﾏｲﾍﾞﾝﾄをﾃﾞｨｾｰﾌﾞﾙする
チャネル品質データを更新
パリティ割込みの解除
エンド

【図３０】

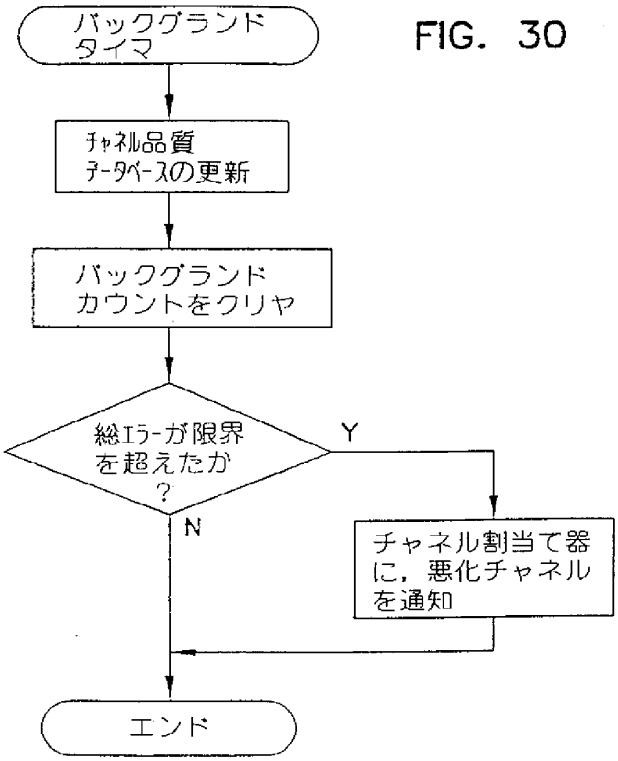

FIG. 30

【図３１】

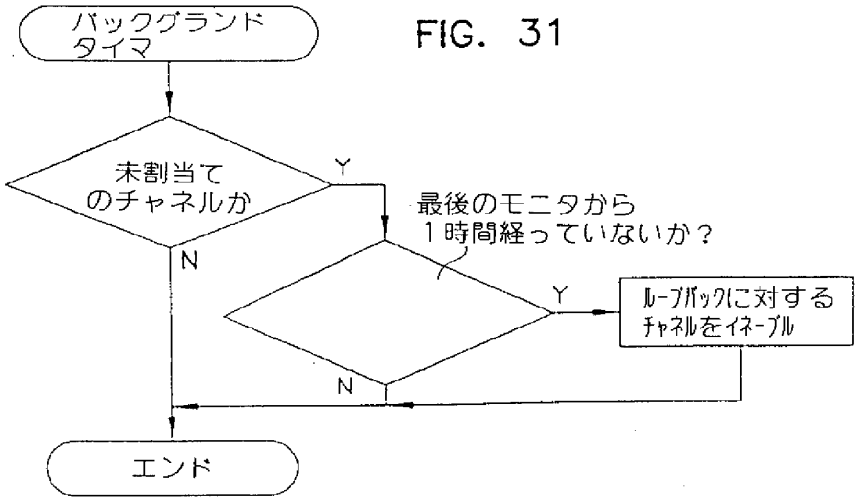

FIG. 31

【手続補正書】

【提出日】１９９７年１２月９日

【補正内容】

請求の範囲

１．ｎビットワードからなる電話通信チャネルの少なくとも１つのチャネルをモニタする方法であって、各ワードをなすビットの１つがパリティビットであり、

該電話通信チャネルをなす各ｎビットワードのパリティビットをサンプリングするステップと、

第１の期間に亘っての該パリティビットのサンプリングから該電話通信チャネルに対して予想されうるビットエラー率を求めるステップとを具備する方法。

２．少なくとも１つの電話通信チャネルがこわれているかどうかを決定するために、予想されうるビットエラー率を、予め決定されたビットエラー率の値と比較するステップと、

もし少なくとも１つの電話通信チャネルがこわれているならば、該少なくとも１つの電話通信チャネルを、こわれておらずかつ割当てられていない異なる電話通信チャネルに再割当てするステップとを更に備えた、請求項１に記載の方法。

３．少なくとも１つの電話通信ｎビットチャネルがこわれているかどうかを決定するために、予想されうるビットエラー率を、予め決定されたビットエラー率の値と比較するステップと、

もし該チャネルがこわれているならば、システム全体の電力を維持している間、該電話通信チャネルの伝送パワーを増加するステップとを更に備えた、請求項１に記載の方法。

４．該ｎビットチャネルがこわれているかどうかを決定するために、該期間に亘って予想されうるビットエラー率を予め定められたビットエラー率の値と比較するステップを更に備えた、請求項１に記載の方法。

５．少なくとも１つの電話通信チャネルが、複数の電話通信チャネルの帯域内に含まれており、該帯域が少なくとも１つの制御チャネルと関連しており、更に異なるチャネルが該帯域内に配置されている、請求項２に記載の方法。

６．少なくとも１つの電話通信チャネルが複数の電話通信チャネルの帯域内に含まれており、該帯域は少なくとも１つの制御チャネルと関連しており、更に異なる電話通信チャネルが、他の少なくとも１つの関連した制御チャネルを有する複数の電話通信チャネルの第２の帯域に配置されている、請求項２に記載の方法。

７．テーブル内に予想されうるビットエラー率を記憶するステップを更に備え、該テーブルは電話通信チャネル上の将来の通信を割当てるために使用されうる、請求項４に記載の方法。

８．もし該チャネルがこわれていないならば、少なくとも１つのより長い期間に亘ってパリティビットをサンプリングすることから少なくとも１つの付加的な予想されうるビットエラー率を求めるステップと、

該チャネルがこわれているかどうかを決定するために、該少なくとも１つの付加的な予想されうるビットエラー率を付加的な予め定められたビットエラー率の値と比較するステップとを更に備えた、請求項４に記載の方法。

９．予め定められたビットエラー率の値は電話通信サービス用のものであり、付加的な予め定められたビットエラー率の値は、付加的な電話通信サービス用のものである、請求項８に記載の方法。

10．電話通信サービスの１つはISDNである、請求項９に記載の方法。

11．もし該電話通信チャネルがこわれているならば、システム全体の電力を維持している間、該電話通信チャネルの伝送パワーを増加させるステップを更に備えた、請求項８に記載の方法。

12．該少なくとも１つの付加的な予想されうるビットエラー率と付加的な予め定められたビットエラー率の値との比較にもとづいて、該電話通信チャネルから異なる電話通信チャネルへ該通信を再割当てするステップを更に備えた、請求項８に記載の方法。

13．もし該ｎビットチャネルがこわれていないならば、複数の連続する期間に亘って予想されうるビットエラー率を累積するステップを更に備えた、請求項４に記載の方法。

14．該ｎビットチャネルがこわれているかどうかを決定するために、該連続する期間に亘っての該累積された予想されうるビットエラー率を、少なくとも１つの付加的な予め定められたビットエラー率の値と比較するステップを更に備えた、請求項13に記載の方法。

15．もし該電話通信チャネルがこわれているならば、該電話通信チャネルからの通信を第２の電話通信チャネルに再割当てするステップを更に備えた、請求項14に記載の方法。

16．もし該電話通信チャネルがこわれているならば、システム全体の電力を維持している間、該電話通信チャネルの伝送パワーを増加するステップを更に備えた、請求項14に記載の方法。

17．該予め定められたビットエラー率の値は電話通信サービスと関連しており、また該少なくとも１つの付加的な予め定められたビットエラー率の値は、少なくとも１つの付加的な電話通信サービスと関連している、請求項16に記載の方法。

18．該電話通信サービスの１つはISDNである、請求項17に記載の方法。

19．もし該電話通信チャネルがこわれているならば、該電話通信チャネルから第２の電話通信チャネルに通信を再割当てするステップを更に備えた、請求項13に記載の方法。

20．もし該電話通信チャネルがこわれているならば、システム全体の電力を維持している間、該電話通信チャネルの伝送パワーを増加するステップを更に備えた、請求項13に記載の方法。

21．テーブル内に該予想されうるビットエラー率を記憶するステップを更に備え、該テーブルは電話通信チャネル上の将来の通信を割当てるために使用されうる、請求項８に記載の方法。

22．少なくとも１つの割当てられていない電話通信チャネルをモニタする方法であって、

該少なくとも１っの割当てられていない電話通信チャネルを周期的にモニタするステップと、

該少なくとも１つの割当てられていない電話通信チャネルに対するエラーデータを累積するステップと、

該少なくとも１つの割当てられていない電話通信チャネルを、該エラーデータにもとづいて、割当てられるのを許容するステップとからなる方法。

23．こわされた電話通信チャネルから、少なくとも１つの割当てられていない電話通信チャネルに、電話通信を再割当てするステップを更に備えた、請求項22に記載の方法。

24．少なくとも１つの割当てられていない電話通信チャネルを周期的にモニタする方法であって、

遠隔のトランスミッタから、各ｎビットワードをなすビットの１つがパリティビットであるような信号を送信するステップと、

該電話通信チャネルのパリティビットをサンプリングするステップと、

該サンプリングされたパリティビットから予想されうるビットエラー率を求めるステップとを含む、請求項22記載の方法。

25．割当てられていないチャネルがパワーダウンされた割当てチャネルである方法であって、

該チャネルがモニタされうるように、割当てられていないチャネル上の遠隔の位置で遠隔のトランスミッタをパワーアップするステップと、

該チャネルがモニタされた後で該遠隔のトランスミッタをパワーダウンするステップとを更に含む、請求項22に記載の方法。

26．該チャネルがこわれているかどうかを決定するために、予想されうるビットエラー率を予め定められたビットエラー率の値と比較するステップを更に備えた、請求項22に記載の方法。

27．少なくとも１つの割当てられていない電話通信チャネルが、複数の割当てられていない電話通信チャネルの１つであり、少なくとも或る数の割当てられていない電話通信チャネルがモニタされる方法であって、このようなモニタリングにもとづいて少なくとも或る数の割当てられていないチャネルの品質をランク付けするステップを含む、請求項22に記載の方法。

28．該ランク付けするステップは、高品質のチャネルをスタンバイチャネルとしてわきにセットすることを含む、請求項27に記載の方法。

【国際調査報告】

INTERNATIONAL SEARCH REPORT

International Application No
PCT/US 96/01606

A. CLASSIFICATION OF SUBJECT MATTER
IPC 6 H04L1/24 H04L1/20 H04L12/28 H04M11/06 H04B10/24
H04L1/12 H04J3/14 H04N7/173

According to International Patent Classification (IPC) or to both national classification and IPC

B. FIELDS SEARCHED

Minimum documentation searched (classification system followed by classification symbols)
IPC 6 H04L H04N H04M H04B H04J H04Q

Documentation searched other than minimum documentation to the extent that such documents are included in the fields searched

Electronic data base consulted during the international search (name of data base and, where practical, search terms used)

C. DOCUMENTS CONSIDERED TO BE RELEVANT

Category *	Citation of document, with indication, where appropriate, of the relevant passages	Relevant to claim No.
X	EP,A,0 599 515 (AMERICAN TELEPHONE AND TELEGRAPH COMPANY) 1 June 1994	1,3,5,6, 11, 15-18, 22,24,25
Y	see abstract	4,9,14, 19,23,26
A	see page 2, line 53 - page 3, line 21	2,7,8, 10,12, 13,20, 21,27-34
	see page 4, line 9 - line 24; figures 1,2	

Y	WO,A,93 00751 (MICROCOM SYSTEMS INC.) 7 January 1993	4,9,14, 19,23,26
	see abstract	
	see page 6, line 29 - line 34	
	see page 7, line 8 - line 14	
	see claims	

	-/--	

[X] Further documents are listed in the continuation of box C.

[X] Patent family members are listed in annex.

* Special categories of cited documents :

"A" document defining the general state of the art which is not considered to be of particular relevance

"E" earlier document but published on or after the international filing date

"L" document which may throw doubts on priority claim(s) or which is cited to establish the publication date of another citation or other special reason (as specified)

"O" document referring to an oral disclosure, use, exhibition or other means

"P" document published prior to the international filing date but later than the priority date claimed

"T" later document published after the international filing date or priority date and not in conflict with the application but cited to understand the principle or theory underlying the invention

"X" document of particular relevance; the claimed invention cannot be considered novel or cannot be considered to involve an inventive step when the document is taken alone

"Y" document of particular relevance; the claimed invention cannot be considered to involve an inventive step when the document is combined with one or more other such documents, such combination being obvious to a person skilled in the art.

"&" document member of the same patent family

Date of the actual completion of the international search	Date of mailing of the international search report
5 August 1996	12.08.96

Name and mailing address of the ISA	Authorized officer
European Patent Office, P.B. 5818 Patentlaan 2 NL - 2280 HV Rijswijk Tel. (+ 31-70) 340-2040, Tx. 31 651 epo nl, Fax (+ 31-70) 340-3016	Gries, T

Form PCT/ISA/210 (second sheet) (July 1992)

INTERNATIONAL SEARCH REPORT

Internal Application No
PCT/US 96/01606

C(Continuation) DOCUMENTS CONSIDERED TO BE RELEVANT

Category *	Citation of document, with indication, where appropriate, of the relevant passages	Relevant to claim No.
X A	EP,A,0 399 611 (PHILIPS ELECTRONIC AND ASSOCIATED / PHILIPS' GLOEILAMPENFABRIEKEN) 28 November 1990 see abstract; claims see column 3, line 50 - column 4, line 58 see column 2, line 37 - line 42	28-30, 32-34 31
A	US,A,4 291 403 (WADDILL ET AL.) 22 September 1981 see column 2, line 18 - line 57 see column 1, line 31 - line 35 see column 1, line 9 - line 13 see abstract	1-34
A	PATENT ABSTRACTS OF JAPAN vol. 10, no. 293 (E-443) [2349] , 4 October 1986 & JP,A,61 111036 (NEC CORP.), 29 May 1986, see abstract	1,5,16, 24,28
A	PATENT ABSTRACTS OF JAPAN vol. 8, no. 167 (E-258) [1604] , 2 August 1984 & JP,A,59 063833 (TOSHIBA K.K.), 11 April 1984, see abstract	1,5,16, 24,28
A	ELEKTRONIK, 7 MAY 1982, WEST GERMANY, vol. 31, no. 9, ISSN 0013-5658, pages 51-58, XP002010137 HUCKETT P ET AL: "Fehleranalyse bei digitalen Übertragungssystemen." see page 55, left-hand column, paragraph 2 - right-hand column, paragraph 2 see page 52, left-hand column, paragraph 2 - right-hand column, paragraph 1; figure 2	1,5,16, 24,28
A	PROCEEDINGS OF THE IEEE, AUG. 1982, USA, vol. 70, no. 8, ISSN 0018-9219, pages 805-828, XP002010138 NEWCOMBE E A ET AL: "Error rate monitoring for digital communications" see page 810, left-hand column, paragraph 2 - right-hand column, paragraph 2	1-34
A	IEEE 1981 INTERNATIONAL CONFERENCE ON COMMUNICATIONS, DENVER, CO, USA, 14-18 JUNE 1981, 1981, NEW YORK, NY, USA, IEEE, USA, pages 35.4.1-3 vol.2, XP002010139 GOLASA R G ET AL: "Performance monitoring for digital radio" see page 35.4.2, left-hand column, paragraph 2 - paragraph 3	1,5,16, 24,28

-/--

Form PCT/ISA/210 (continuation of second sheet) (July 1992)

INTERNATIONAL SEARCH REPORT

Inter nal Application No
PCT/US 96/01606

C.(Continuation) DOCUMENTS CONSIDERED TO BE RELEVANT

Category *	Citation of document, with indication, where appropriate, of the relevant passages	Relevant to claim No.
A	GB,A,2 266 433 (TELEFONAKTIEBOLAGET L M ERICCSON) 27 October 1993 see page 11, line 27 - page 17, line 33 see abstract ---	33,34
P,X	WO,A,95 13579 (ADVANCED TECHCOM INC.) 18 May 1995 see abstract see page 1, line 29 - page 3, line 5; claims; figures -----	1-3,5,6, 15-18, 22,24, 25, 28-30, 32-34

Form PCT/ISA/210 (continuation of second sheet) (July 1992)

INTERNATIONAL SEARCH REPORT

Information on patent family members

Intern[illegible]al Application No
PCT/US 96/01696

Patent document cited in search report	Publication date	Patent family member(s)		Publication date
EP-A-599515	01-06-94	US-A-	5513185	30-04-96
		CA-A-	2105544	24-05-94
		JP-A-	6216972	05-08-94
WO-A-9300751	07-01-93	US-A-	5241565	31-08-93
		AU-B-	2295292	25-01-93
EP-A-399611	28-11-90	GB-A-	2232326	05-12-90
		DE-D-	69025353	28-03-96
		JP-A-	3050926	05-03-91
		US-A-	5200956	06-04-93
US-A-4291403	22-09-81	NONE		
GB-A-2266433	27-10-93	US-A-	5448750	05-09-95
		CA-A-	2094549	23-10-93
		GB-A-	2292655	28-02-96
		NZ-A-	247401	21-12-95
		SE-A-	9301243	23-10-93
WO-A-9513579	18-05-95	AU-B-	8018894	29-05-95
		US-A-	5515380	07-05-96

Form PCT/ISA/210 (patent family annex) (July 1992)

フロントページの続き

(81)指定国　　ＥＰ(ＡＴ，ＢＥ，ＣＨ，ＤＥ，ＤＫ，ＥＳ，ＦＲ，ＧＢ，ＧＲ，ＩＥ，ＩＴ，ＬＵ，ＭＣ，ＮＬ，ＰＴ，ＳＥ)，ＯＡ(ＢＦ，ＢＪ，ＣＦ，ＣＧ，ＣＩ，ＣＭ，ＧＡ，ＧＮ，ＭＬ，ＭＲ，ＮＥ，ＳＮ，ＴＤ，ＴＧ)，ＡＰ(ＫＥ，ＬＳ，ＭＷ，ＳＤ，ＳＺ，ＵＧ)，ＵＡ(ＡＺ，ＢＹ，ＫＧ，ＫＺ，ＲＵ，ＴＪ，ＴＭ)，ＡＬ，ＡＭ，ＡＴ，ＡＵ，ＡＺ，ＢＢ，ＢＧ，ＢＲ，ＢＹ，ＣＡ，ＣＨ，ＣＮ，ＣＺ，ＤＥ，ＤＫ，ＥＥ，ＥＳ，ＦＩ，ＧＢ，ＧＥ，ＨＵ，ＩＳ，ＪＰ，ＫＥ，ＫＧ，ＫＰ，ＫＲ，ＫＺ，ＬＫ，ＬＲ，ＬＳ，ＬＴ，ＬＵ，ＬＶ，ＭＤ，ＭＧ，ＭＫ，ＭＮ，ＭＷ，ＭＸ，ＮＯ，ＮＺ，ＰＬ，ＰＴ，ＲＯ，ＲＵ，ＳＤ，ＳＥ，ＳＧ，ＳＩ，ＳＫ，ＴＪ，ＴＭ，ＴＲ，ＴＴ，ＵＡ，ＵＧ，ＵＺ，ＶＮ

(72)発明者　ロバーツ，ハロルド　エー．
アメリカ合衆国，ミネソタ　55346，エデン　プレイリー，ビーコン　サークル　7017
(72)発明者　ブリード，ジェフリー
アメリカ合衆国，ミネソタ　55347，エデン　プレイリー，カーティス　レーン　8073
(72)発明者　ブスカ，スティーブン　ピー．
アメリカ合衆国，ミネソタ　55305，ミネトンカ，スタントン　ドライブ　13370

【要約の続き】

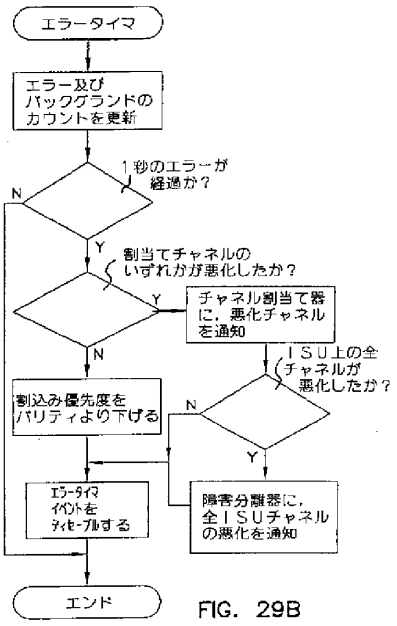

FIG. 29B

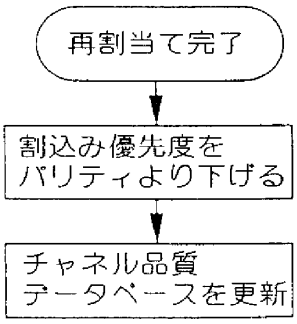

FIG. 29C

COMMUNICATION DEVICE AND METHOD THEREFOR

Publication number: JP11261665 (A)
Publication date: 1999-09-24
Inventor(s): STEPHEN PARM +
Applicant(s): MATSUSHITA GRAPHIC COMMUNIC +
Classification:
- international: ***H04L29/06; H04J11/00; H04L27/34; H04L29/08; H04M11/00;*** **H04L29/06; H04J11/00; H04L27/34; H04L29/08; H04M11/00;** (IPC1-7): H04L29/06; H04L29/08; H04M11/00
- European:
Application number: JP19990003235 19990108
Priority number(s): JP19990003235 19990108; JP19980015057 19980109

Also published as:
JP3027813 (B2)

Abstract of **JP 11261665 (A)**

PROBLEM TO BE SOLVED: To exchange the negotiation data and the user data, without affecting an existing communication environment and also to check the circuit characteristic to quickly decide a communication standard that is suitable for a communication circuit and a data communication procedure. SOLUTION: A central station system 2 and a remote system 4 properly use the user data receiving parts 60 and 64, negotiation data receiving parts 52 and 56, user data transmitting parts 62 and 58 and the negotiation data transmitting parts 54 and 50 respectively and exchange the negotiation and user data in different bands so as to exchange the transmitting and receiving capabilities. Then a random noise generating part 74 and a random noise receiving part 76 use the base tone and optional tone signals in the higher bands to check the circuit characteristics.; With such a constitution, a communication standard and data communication procedures are decided.

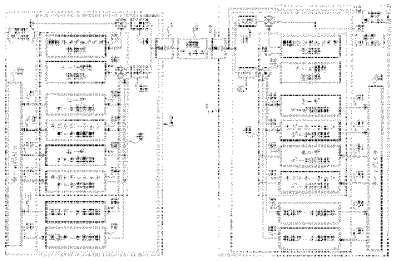

Data supplied from the ***espacenet*** database — Worldwide

(19)日本国特許庁（ＪＰ）　(12) **公開特許公報（Ａ）**　(11)特許出願公開番号

特開平11－261665

(43)公開日　平成11年(1999)９月24日

(51)Int.Cl.[6]		識別記号	ＦＩ		
Ｈ０４Ｌ	29/06		Ｈ０４Ｌ	13/00	３０５Ｃ
	29/08		Ｈ０４Ｍ	11/00	３０３
Ｈ０４Ｍ	11/00	３０３	Ｈ０４Ｌ	13/00	３０７Ａ

審査請求　未請求　請求項の数36　ＯＬ　（全 18 頁）

(21)出願番号　特願平11－3235

(22)出願日　平成11年(1999)１月８日

(31)優先権主張番号　特願平10－15057

(32)優先日　平10(1998)１月９日

(33)優先権主張国　日本（ＪＰ）

(71)出願人　000187736
松下電送システム株式会社
東京都目黒区下目黒２丁目３番８号

(72)発明者　ステファン・パーム
東京都目黒区下目黒２丁目３番８号　松下電送システム株式会社内

(74)代理人　弁理士　鷲田　公一

(54)【発明の名称】　通信装置及び通信方法

(57)【要約】

【課題】　既存の通信環境に影響を及ぼすことなく、ネゴシェーションデータ、ユーザーデータの交換を行うとともに、回線特性の検査を行い、短時間で通信回線に適した通信規格、データ通信手順を決定すること。

【解決手段】　中央局システム２と遠隔システム４とは、ユーザデータ受信部６０、６４、ネゴシエーションデータ受信部５２、５６、ユーザデータ送信部６２、５８、ネゴシエーションデータ送信部５４、５０、を適宜使用し、異なる帯域でネゴシエーションデータとユーザデータとを交換することにより、送受信能力の交換を行う。また、ランダムノイズ生成部７４、ランダムノイズ受信部７６により、更に高帯域の基本トーン信号とオプショントーン信号とを使用して、回線特性検査を行う。これらにより、通信規格、データ通信手順を決定する。

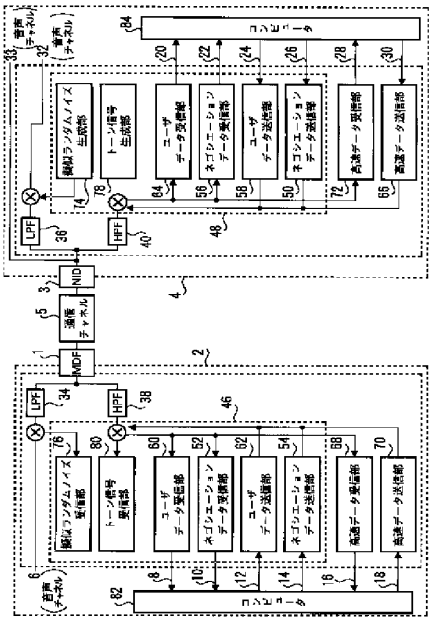

【特許請求の範囲】
【請求項１】　通信チャネルの条件を検査する工程と、検査された通信チャネル条件と各通信規格の能力に基づいて通信規格を選択する工程とを具備し、複数の通信規格から一つの通信規格を選択する、ことを特徴とする通信方法。
【請求項２】　通信チャネルの条件を検査する工程は、通信チャネルを介して第一信号を発信する工程と、通信チャネルの評価結果を受信する工程と、受信された評価結果に応じて通信規格を選択する工程と、を具備する、ことを特徴とする請求項１記載の通信方法。
【請求項３】　通信規格を選択する工程は、複数のｘＤＳＬモデム規格から一つのｘＤＳＬモデム規格を選択する工程を含む、ことを特徴とする請求項１記載の通信方法。
【請求項４】　通信チャネル条件を検査する工程と実質的に同時間帯に、複数の通信規格の各能力を示す通信規格能力情報を発信する工程を更に具備する、ことを特徴とする請求項１記載の通信方法。
【請求項５】　通信チャネル条件を検査する工程と実質的に同時間帯に、ユーザデータを発信する工程を更に具備する、ことを特徴とする請求項１記載の通信方法。
【請求項６】　通信チャネル条件を検査する工程は、通信チャネルにスプリッタが存在するか否かを判定する工程を更に具備する、ことを特徴とする請求項１記載の通信方法。
【請求項７】　通信チャネルを介して通信規格に関するネゴシエーション情報を少なくとも送信または受信する第一通信装置と、通信チャネルの回線特性を判定するために、通信チャネルを介して検査情報を少なくとも送信または受信する第二通信装置とを具備し、データ交換を行う、ことを特徴とする通信装置。
【請求項８】　前記ネゴシエーション情報と前記検査情報とは、実質的に同時間帯に交換される、ことを特徴とする請求項７記載の通信装置。
【請求項９】　前記ネゴシエーション情報と前記検査情報とは、異なる時間帯に交換される、ことを特徴とする請求項７記載の通信装置。
【請求項１０】　前記検査信号は、異なる周波数帯域の複数の信号を有する、ことを特徴とする請求項７記載の通信装置。
【請求項１１】　前記通信装置は、所定の第一周波数帯域の通信チャネルを介して前記検査情報を交換する、ことを特徴とする請求項７記載の通信装置。
【請求項１２】　前記通信装置は、所定の第二周波数帯域においてオプショナル検査信号を交換する、ことを特徴とする請求項１１記載の通信装置。
【請求項１３】　二つの場所間でネゴシエーション情報を交換する第一通信装置と、ユーザ情報を少なくとも送信又は受信する第二通信装置と、を具備することを特徴とする通信装置。
【請求項１４】　前記ネゴシエーション情報は、通信規格に関する情報である、ことを特徴とする請求項１３記載の通信装置。
【請求項１５】　前記ネゴシエーション情報は、通信チャネル特性に関する情報である、ことを特徴とする請求項１３記載の通信装置。
【請求項１６】　所定のデータ通信に関するネゴシエーション情報を交換する第一通信装置と、所定の第二通信帯域の利用可能性を示す為に用いられるフォールバック通知信号を、所定の第二データ通信帯域で交換する第二通信装置とを具備し、データ交換を行うことを特徴とする通信装置。
【請求項１７】　所定の第二データ通信帯域は、音声帯域を有する、ことを特徴とする請求項１６記載の通信装置。
【請求項１８】　前記ネゴシエーション情報と前記フォールバック通知信号とは、実質的に同時間帯に交換される、ことを特徴とする請求項１６記載の通信装置。
【請求項１９】　前記ネゴシエーション情報と前記フォールバック通知信号とは、異なる時間帯に交換される、ことを特徴とする請求項１６記載の通信装置。
【請求項２０】　第一通信帯域が使用できない場合に使用される音声帯域通信装置を、更に具備することを特徴とする請求項１７記載の通信装置。
【請求項２１】　前記フォールバック通知信号は、音声帯域におけるいかなる通信とも干渉しない、ことを特徴とする請求項１７記載の通信装置。
【請求項２２】　前記フォールバック通知信号は、スペクトラム拡散信号を有する、ことを特徴とする請求項２１記載の通信装置。
【請求項２３】　発呼側と被呼側との間でデータ交換を行う通信方法であって、
被呼側で所定の信号が検出されたか判定する工程と、被呼側で所定の信号が検出されない場合にフォールバック手順を開始する工程と、発呼側と被呼側の能力を確認するために発呼側と被呼側との間でネゴシエーション情報を交換する工程と、発呼側と被呼側とのいずれかによりチャネル情報を受信する工程と、交換されたネゴシエーション情報と受信されたチャネル情報の少なくとも一つを用い、適切な通信規格を選択し、通信回線を確立する工程と、を具備することを特徴とする通信方法。
【請求項２４】　受信したチャネル情報を解析する工程と、交換されたネゴシエーション情報と受信されたチャネル情報の少なくとも一つに関連付けられた解析された情報を用いて、適切な通信規格を選択する工程と、を更に具備することを特徴とする請求項２３記載の通信方法。
【請求項２５】　フォールバック手順は音声手順の使用を具備することを特徴とする請求項２３記載の通信方

法。
【請求項２６】　発呼側と被呼側との間でユーザデータを交換する工程、を更に具備することを特徴とする請求項２３記載の通信方法。
【請求項２７】　通信チャネルの回線特性を判定する手段と、前記判定手段によって判定された前記通信チャネルの回線特性に基づいて、前記通信チャネルを介して高速データ通信を開始する手段と、を具備することを特徴とする通信装置。
【請求項２８】　高速データ通信チャネルは、音声帯域より高い周波数帯域を用いる、ことを特徴とする請求項２７記載の通信装置。
【請求項２９】　通信装置の通信規格を判定する手段を更に具備し、前記高速データ通信は、前記判定された通信規格と回線特性とに従って開始される、ことを特徴とする請求項２７記載の通信装置。
【請求項３０】　前記判定手段が通信チャネルが高速データ通信をサポートしないと判定した場合に、音声帯域の通信チャネルを介してデータ通信を行う手段を、更に具備することを特徴とする請求項２７記載の通信装置。
【請求項３１】　前記通信装置は、モデムを具備することを特徴とする請求項２７記載の通信装置。
【請求項３２】　通信チャネルにスプリッタが存在しているか否かを判定する手段を、更に具備することを特徴とする請求項２７記載の通信装置。
【請求項３３】　前記スプリッタの存在を判定する手段は、通信規格の性能の最適化を可能にすることを特徴とする請求項３２記載の通信装置。
【請求項３４】　前記通信装置の高速データ通信能力を示す通知信号を、音声帯域の通信チャネルを介して交換する手段を、更に具備することを特徴とする請求項２７記載の通信装置。
【請求項３５】　データ通信を可能にする通信方法であって、通信チャネルにおけるスプリッタの存在を検出する工程と、高速通信が利用可能か否かを判定する工程と、を具備する通信方法。
【請求項３６】　前記スプリッタの存在を判定する工程は、音声帯域通信を逆に妨げることのない特性を有する信号を発する工程を、更に具備することを特徴とする請求項３５記載の通信方法。
【発明の詳細な説明】
【０００１】
【発明の属する技術分野】本発明はデータモデムなどの通信装置及び通信方法に関し、特に通信回線を確立するために種々の通信システム構成を検出し、適切な通信システム構成を選択することができる通信装置及び通信方法に関する。
【０００２】
【従来の技術】従来、モデム（アナログおよびデジタル）などのデータ通信装置は公衆電話回線網（ＰＳＴＮ：Ｐｕｂｌｉｃ　Ｓｗｉｔｃｈｅｄ　Ｔｅｌｅｐｈｏｎｅ　Ｎｅｔｗｏｒｋｓ）を介してある場所から別の場所にデータを送信するために使用されてきた。このようなモデムはＰＳＴＮの従来の音声帯域（例えば約０－４ｋＨの帯域）で動作する。初期のモデムはＰＳＴＮを介して毎秒約３００ビット（ｂｐｓ）あるいはそれ以下の速度でデータを送信していた。
【０００３】その後徐々に、インターネットの普及につれて、より高速の通信方式（例えばモデム）が要求され開発された。現在、利用可能な最高速のアナログモデム（国際電気通信連合（ＩＴＵ）が定義するＩＴＵ－Ｖ．３４モデムと称される）は、理想的な条件下で約３３，６００ｂｐｓの速度でデータ送信を行う。これらのモデムはＰＳＴＮの約４ｋＨｚ内の帯域でもデータ交換を行う。
【０００４】数メガバイト（ＭＢ）のデータファイルを転送することも珍しくはないが、Ｖ．３４変調方式を用いて動作するモデムはそのようなファイルの転送に長時間を必要とする。その結果、更に高速のモデムに対する需要が高まってきた。
【０００５】したがって、従来の４ＫＨｚ帯域以上のスペクトラムを用いるローカルツイストワイヤペアでデータを送信するために多くの新しい通信方法が提案され開発されている。例えば、種々のＤＳＬ（Ｄｉｇｉｔａｌ　Ｓｕｂｓｃｒｉｂｅｒ　Ｌｉｎｅ：デジタル加入者回線）モデムが開発されている。これらは、例えば、ＤＳＬ、ＡＤＳＬ、ＶＤＳＬ、ＨＤＳＬ、ＳＤＳＬ等などで、一般にｘＤＳＬと称される。
【０００６】種々のｘＤＳＬ方式の幾つかは音声帯域及び音声帯域以上の帯域での、シングルツイストペアによる同時通信を可能にする。各種ｘＤＳＬそれぞれは、異なる通信方式を採用するため、上り回線及び下り回線、あるいはどちらかにおける転送速度が異なり、またツイストペア通信チャネルの使用周波数帯域も異なる。
【０００７】更に、ｘＤＳＬのタイプによっては、ローパスフィルタ、ハイパスフィルタ、および組合フィルタなどのフィルタを必要とする。これらのフィルタはスプリッタと称されることもあり、装置間で異なる場合もある。これらのフィルタは、音声帯域通信を伝搬する周波数帯域を、データ通信を伝搬する音声帯以上の周波数帯域から分離する。
【０００８】ｘＤＳＬデータ通信方式を取り巻く回線環境は、例えば、従来の音声帯域内（すなわち０－４ｋＨｚ帯域）で通信を行う従来のアナログモデムと共存する能力や交換局の違い、回線の品質等、極めて多いうえ、顕著に異なり、複雑である。したがって、最適かつ干渉のない通信回線を確立するためには、通信機器能力の他に通信チャネルの能力を判定できることが不可欠である。
【０００９】Ｖ．３４モデム等で実現されているように

従来のスタートアップシーケンス（例えばＩＴＵ－Ｔによって確立されたＶ．８およびＶ．８ｂｉｓプロトコルなど）は、使用される変調方式、プロトコル等の異なる機器能力を同定あるいはネゴシエートする為に、各モデムから送信されるビットシーケンスを利用する。これらのスタートアップシーケンスは、従来の音声帯域通信方法にのみ適用される。これら従来のスタートアップシーケンスは、通信チャネルの構成や回線状態を検査（又は認識）しない。

【００１０】しかしながら、ｘＤＳＬモデムに関しては、回線条件に関する情報、例えば、周波数特性、ノイズ特性、スプリッタの有無などは、通信回線がうまく確立されるとしても、回線の確立に先立ち２つのモデムがネゴシエーションするときに有用である。

【００１１】音声帯域での回線プロービング技術は、技術的にはよく知られており、音声帯域回線条件情報を判定するために用いることができる。このような技術は、一定の変調方法、例えばＶ．３４を最適化する為に、有効に使用されてきている。多重変調方法を有する装置で、Ｖ．８あるいはＶ．８ｂｉｓはネゴシエート及び特定の変調を選択する為に使用されてきており、その変調開始シーケンスが起動した後に、回線プロービング技術が、通信チャネルの状態を表示する信号を受信するために使用される。この時点で、与えられた通信チャネルが選択された変調方法を有効にサポートできないと判定されると、従来では、時間のかかる試行錯誤的なフォールバック技術が使用され、動作する変調方法を試験し検出するようにしていた。

【００１２】

【発明が解決しようとする課題】したがって、よりよい通信回線を確立するために必要なものは、最適通信方法の選択を試みる前に回線条件を監視（検査）する方法である。このように、一定の変調方式に対してデータ速度を上げる技術は既に確立されてはいるものの、従来では、通信方法の選択を補助するためにチャネル情報を利用する方法は提供されていない。

【００１３】残念ながら、現在の技術水準では、通信能力のネゴシエーションは、より効率のよいチャネル構成を認識することなく起動する。スペクトラム、スプリッタ等を明確に認識することは、適切な通信メカニズム（変調方式）を選択するためには不可欠である。

【００１４】本発明は、かかる点に鑑みてなされたものであり、現存する回線条件に適した特定の（ｘＤＳＬ）通信規格を決定するために、通信チャネルおよび関連機器の種々の構成、能力および制限を検出する。換言すれば、本発明は、既存の通信環境に影響を及ぼすことなく、ネゴシェーション、ユーザーデータの交換を行うとともに、回線特性の検査を行い、通信回線に適した通信規格、データ通信手順を短時間で決定することができる、通信装置、通信方法、を提供することを目的とする。

【００１５】

【課題を解決するための手段】上記目的を達成するために、本発明は、幾つかの個々の技術を一つのシステムとして使用することとした。具体的には、中央局システムと遠隔システムとの２つのシステムの間で、異なる帯域でネゴシエーションデータとユーザデータとを交換することにより送受信能力の交換を行うとともに、回線特性検査を行うようにした。これらにより、使用すべき通信規格、データ通信手順が決定される。

【００１６】

【発明の実施の形態】本発明の一の態様によれば、複数の通信方法（例えば、ＤＳＬ規格）を実施するモデム間のネゴシエートを行い、通信に使われる一つの共通通信規格を選択する方法及び装置を提供する。通信制御部は、ネゴシエーションチャネルにおいてハンドシェイク手順（プロトコル）を実行し、通信交換において使用するｘＤＳＬの種別の識別情報を含む、高速データ通信に関する情報を取得する。通信規格は、事実上の、独占的な、あるいは、企業あるいは政府によって発行された、あらゆるタイプの規格に適用される。

【００１７】他の態様において、本発明は、検査信号を用い、中央局通信システムと遠隔通信システム間の通信チャネルの特性を判定する方法を提供する。検査信号は、例えば周波数ロールオフ、ノイズ等以外の障害、を検出する。これら障害は、中央局システムと遠隔システム間で識別され明らかにされる。通信チャネル品質に関する情報により、本発明は、継続する通信規格の選択に関してより正確な判定（例えば、ＡＤＳＬの代わりにＣＤＳＬ、あるいはＶＤＳＬの代わりにＣＤＳＬを用いる等）を行うことができる。

【００１８】他の態様において、本発明は、周波数帯域を分離する為に使用される機器の有無を判定する方法及び装置を提供する。多くの場合、そのような機器は、音声帯域以上の周波数における通信を行う為に必要とされる。その際に使用する分離装置（スプリッタ）が欠如している場合は、他の通信方法を用いることも考慮される。本発明は、スプリッタの有無を検出する方法を含んでおり、そのスプリッタは、通信に影響を及ぼさず、音声帯域を同時に行われるいかなる通信（音声通信あるいはアナログデータ通信等）とも干渉しない。

【００１９】他の態様において、本発明は、高速帯域通信が可能ではないと判定されると、従来の音声帯域通信方法へフォールバックする手順を提供する。通知信号（拡散処理信号等）は、第一通信制御部により受信される従来の音声帯域内で送信される。通知信号は、従来の音声帯域内のデータ通信実行能力を示す識別信号を有する。

【００２０】また、通知信号は、通信チャネルが現時点では高速通信が可能ではなくても、通信機器は高速通信

が可能であるかを判定する。これにより、例えば、ユーザは高速データ通信装置（モデム等）を購入し設置することが可能になり、設置した時点で、中央局システムは、自動的にユーザーサイドにおける高速通信装置の設置を検出し、遠隔システム側のユーザがそのモデムを用い高速通信チャネルの確立を要求することができるようなオンライン手順を開始する。

【００２１】本発明の他の態様において、音声帯域で送信される通知信号（音声帯域以上で高速データ通信が可能であること示す）は、高速データ通信が開始される時に同時に音声帯域で行われる可能性のある従来の通信（音声通信あるいはアナログデータ通信等）を干渉・中断させないように選択される。通知信号は、例えば、擬似乱数シーケンスを用いて生成されるスペクトラム拡散信号でよい。あるいは、送信エネルギーを音声帯域内で均等に拡散させる他のスペクトラム拡散技術を用いてもよい。

【００２２】本発明の他の態様において、エンドユーザ間通信、例えばユーザ名、パスワード等の交換（送信）は、通信チャネル検査（回線プロービング等）が完了し高速通信能力が交換される前に、ユーザ専用チャネルを介して開始することができる。従来では、通信システムは、エンドユーザ間でデータが通信されるまでに、長いトレーニング（あるいは起動）時間を必要とした。本発明では、高速通信を行うための（チャネル及び通信方法の）試験及びネゴシエーションを行うと同時に、通信パスの確立を行うことができる。

【００２３】本発明の種々の態様を組み合わせることにより、通信チャネルと設置された機器の検査を効果的かつ効率よく行い、最適な通信方法を選択する方法及び装置が提供される。システム設計者、設置業者、プロバイダは、通信の最適手段を効率よく規定する為のネゴシエーションがおこなわれている間に、本発明で考慮される種々のパラメータを設定することができる。

【００２４】本発明によれば、可能な高速通信の判定、サポートされている高速データ通信能力の交換と選択、通信回線特性の検査、等を同時に実行することができるため、判定したデータ通信手順のハンドシェイクプロトコルに直ちに移行することができる。

【００２５】本発明は、最適ネゴシエーションの為には、通信チャネルの両サイドで実施されることが好ましい。しかしながら、通信チャネルの一つのサイドだけが本発明を実施してもよい。更に、一つのサイドが、本発明を部分的に実施してもよい。そのような構成は、正確に通信システムに報告され、適当とされる場合には、通信システムが従来の通信方法（アナログ等）をサポートしていれば、通信システムはそれら従来の通信方法にフォールバックできる。

【００２６】更に、本発明は、実際の高速通信装置で実施する必要がない。本発明は、通信チャネルを終端し、または分岐するインテリジェントスイッチにおいて実施できる。これにより、通信システムは、個々の装置（あるいはモデム）において実施される、種々の通信規格を収容することができる。これら通信規格は、中央局システムと遠隔システムとの能力及び要求の明確なネゴシエーションにより、必要に応じて正確に割り当てられる。

【００２７】本発明によれば、複数の通信規格の中から一つの通信規格を選択する方法は、通信チャネルの状態を検査する手順と、検査された通信チャネル条件と複数の通信規格の各々の能力に基づいて通信規格を選択する手順と、を有する。通信チャネル条件の検査においては、信号の通信チャネル上で第１信号を発信し、通信チャネルの影響を評価する信号を受信し、その受信信号に対応して通信規格を選択する。通信規格の選択においては、複数のｘＤＳＬモデム規格の中から一つのｘＤＳＬモデム規格を選択する。

【００２８】本発明によれば、通信規格能力情報またはユーザデータは、通信チャネル状態の検査時に、実質的に同時に発信される。

【００２９】更に、本発明によれば、通信チャネルにスプリッタが設置されているかを判定することができる。

【００３０】本発明の他の態様に係る通信装置は、通信規格に関するネゴシエーション情報を通信チャネル上で送信または受信する第一通信装置と、通信チャネルの回線特性を判定する検査情報（異なる周波数帯における複数の信号等）を通信チャネル上で送信または受信する第二通信装置とを具備する。

【００３１】本発明によれば、ネゴシエーション情報と検査情報とは、実質的に同時間帯で交換される。あるいは、ネゴシエーション情報と検査情報は異なる時間帯で交換されるようにしてもよい。

【００３２】また、本発明によれば、通信装置は、所定の周波数帯における通信チャネル上で検査信号を交換し、更に、第二周波数帯において、オプショナル検査信号を交換することもできる。

【００３３】本発明の他の態様に係る通信装置は、二つのサイド間でネゴシエーション情報を交換する第一通信装置と、ユーザデータを少なくとも送信または受信する第二通信装置とを具備する。ネゴシエーシ情報は、ＡＤＳＬ、ＣＤＳＬ、ＨＤＳＬ、等の通信規格通信チャネル特性に関するものである。

【００３４】本発明によれば、データ交換の為に開示された通信装置は、所定のデータ通信に関するネゴシエーション情報を交換する第一通信装置と、所定のデータ通信帯域上でフォールバック通知信号を交換する第二通信装置とを具備する。このフォールバック通知信号は、所定の第二通信帯域が利用可能であることを示す為に用いられる。

【００３５】本発明によれば、所定の第二データ通信帯域が音声帯域を具備する。この音声帯域通信装置は、第

一通信帯域が使用できない時に使用される。
【００３６】本発明によれば、ネゴシエーション情報とフォールバック通知信号とが、実質的に同時間帯でも、あるいは異なる時間帯でも交換できる。
【００３７】本発明によれば、フォールバック通知信号（スペクトラム拡散信号等）が、音声帯域における他の通信と干渉しない。
【００３８】本発明の他の態様に係る通信方法は、発呼側装置と応答側装置の間のデータ交換を行うものである。この方法により、所定の信号が応答側装置で検出されたか判定される。フォールバック手順（音声帯域での手順等）は、所定の信号が応答側装置で検出されない場合に、開始される。一方、所定の信号が検出されると、ネゴシエーション情報が発呼側装置と応答側装置間で交換され、発呼側装置と応答側装置間の能力が確定する。チャネル情報が、発呼側装置と応答側装置のどちらか一方で受信されると、交換されたネゴシエーション情報と受信されたチャネル情報の少なくとも一つを用いて適切な通信規格が選択され、通信回線が確立される。
【００３９】本発明によれば、この方法は、更に、受信されたチャネル情報を解析し、解析された情報と、交換されたネゴシエーション情報と受信されたチャネル情報の少なくとも一つとを関連付けして用い、適切な情報規格を選択する。
【００４０】本発明によれば、ユーザデータは、初期化手順が行われている間に、発呼側装置と応答側装置との間で交換される。
【００４１】本発明の他の態様によれば、開示されたデータ通信装置（ばモデム等）は、通信チャネルの回線特性を判定する手段と、判定手段によって判定された通信チャネルの回線手段に基づき、通信チャネル上で高速データ通信を開始する手段とを具備する。通知信号は、通信装置の高速データ通信能力を示し、音声帯域の通信チャネル上で交換される。
【００４２】本発明によれば、高速データ通信チャネルは音声帯域より高い周波数帯域を用いる。
【００４３】本発明によれば、通信装置の通信規格を判定する手段を具備するこができる。これにより、高速データ通信は、判定された通信規格と判定された回線特性に従って開始される。
【００４４】本発明によれば、判定手段が、通信チャネルが高速データ通信をサポートしないと判定した場合、音声帯域の通信チャネル上でデータ通信を行う手段を提供することができる。
【００４５】更に、本発明の他の態様に係る通信装置は、通信規格の能力を最大限引き出すために、通信チャネルにおけるスプリッタの存在を判定する手段、を具備することである。
【００４６】本発明の他の態様に係る方法は、通信チャネルにおけるスプリッタの存在を検出することによりデータ通信を可能にし、高速通信が利用可能かどうかを判定する。スプリッタの存在は、音声帯域通信を干渉しないような信号を用いて検出される。
【００４７】以下、図１～図１２を参照しつつ、本発明を、更に具体的に説明する。
【００４８】図1はモデム装置を用いるデータ通信システム実施の形態１の概略ブロック図を示す。本発明は発明の趣旨と範囲から逸脱しないかぎり他の通信装置にも適用できるものと理解される。さらに、本発明はツイストペアワイヤを使用した電話通信システムを取り上げて記述されているが、本発明は発明の趣旨と範囲から逸脱しないかぎりケーブル通信システム（ケーブルモデム等）、光学通信システム、ワイヤレスシステム、赤外線通信システム等、他の通信環境にも適用できるものと理解される。
【００４９】実施の形態１に係るデータ通信システムは、中央局システム２と遠隔システム４から構成され、両システムは通信チャネル５を介してインタフェースがとられる。
【００５０】中央局システム２は、中央局システム２と通信チャネル５間のインタフェースとして機能するメイン分配フレーム（ＭＤＦ）１を有する。ＭＤＦ１は、一端に外部からの電話回線（例えば通信チャネル５）を接続し、他端に内部回線（例えば内部中央局システム回線）を接続する。
【００５１】遠隔システム４には、遠隔システム４と通信チャネル５とのインタフェース機能を持つネットワークインタフェースデバイス（ＮＩＤ）３が搭載されている。ＮＩＤ３は、顧客の機器と通信ネットワーク（例えば通信チャネル５）のインタフェースとして機能する。
【００５２】図2は、実施の形態１における図１のデータ通信システムを具体的に示したブロック図である。本実施の形態では、代表的なシステム、つまり、中央局システム２と遠隔システム４の両方に本発明を適用し、遠隔システム４にはスプリッタは設置されていない例を示す。
【００５３】図2に示すように、中央局システム２は、低域フィルタ３４、高域フィルタ３８と、テストネゴシエーションブロック４６と、高速データ受信部６８と、高速データ送信部７０と、コンピュータ８２とを具備する。コンピュータ８２は、中央局システムにおけるネットワーク機器に対して、総括的インターフェースとして機能する。テストネゴシエーションブロック４６は、後述される、回線プロービング等のすべてのネゴシエーションを行う。これらネゴシエーションは、実際の高速データ通信の前に行われる。
【００５４】低域フィルタ３４と高域フィルタ３８は通信チャネル５を介してて転送される通信信号をフィルタリングする。テストネゴシエーションブロック４６は中央局システム２、遠隔システム４及び通信チャネル５の

条件、能力等をテストし、ネゴシエーションを行う。テストネゴシエーションブロック４６の手順が完了した後、高速データ送受信部（モデム等）６８及び７０の選択を開始する。高速データ受信部は遠隔システム４から送信された高速データを受信し、一方高速データ送信部７０は遠隔システム４に高速データを送信する。高速データ部６８及び７０は、ＡＤＳＬモデム、ＶＤＳＬモデム、あるいはＣＤＳＬモデム等を具備することができる。高速データ部６８及び７０は、初期ネゴシエーション手順において、テストネゴシエーションブロック４６を共通に用いる複数の高速送信機器から構成されてもよい。

【００５５】本実施の形態では、テストネゴシエーションブロック４６は、擬似ランダムノイズ受信部７６と、トーン信号受信部８０と、ユーザデータ受信部６０と、ネゴシエーションデータ受信部５２と、ユーザデータ送信部６２と、ネゴシエーションデータ送信部５４とを備える。

【００５６】擬似ランダムノイズ受信部７６は、擬似ランダムノイズを受信する。トーン信号受信部８０はトーン信号を受信する。ユーザデータ受信部６０はユーザデータを受信し、ユーザデータ送信部６２はユーザデータを送信する。ネゴシエーションデータ受信部５２はネゴシエーションデータを受信し、ネゴシエーションデータ送信部５４はネゴシエーションデータを送信する。中央局システム２の種々の部分の動作の詳細について以下に示す。

【００５７】ユーザデータ受信部６０、ネゴシエーションデータ受信部５２、及び高速データ受信部６８はコンピュータ８２に信号を送信する。ユーザデータ送信部６２、ネゴシエーションデータ送信部５４、及び高速データ送信部７０はコンピュータ８２から発信された信号を受信する。

【００５８】遠隔システム４は、低域フィルタ３６と、高域フィルタ４０と、テストネゴシエーションブロック４８と、高速データ受信部７２と、高速データ送信部６６と、コンピュータ８４とを具備する。

【００５９】低域フィルタ３６、高域フィルタ４０は通信チャネル５を介して転送される通信信号をフィルタリングする。テストネゴシエーションブロック４８は、中央局システム２、遠隔システム４、及び通信チャネル５の条件、能力等をテストし、ネゴシエーションを行う。高速データ受信部７２は中央局システム２から送信された高速データを受信し、一方高速データ送信部６６は中央局システム２に高速データを送信する。

【００６０】本実施の形態では、テストネゴシエーションブロック４８は、擬似ランダムノイズ生成部７４と、トーン信号生成部７８と、ユーザデータ受信部６４と、ネゴシエーションデータ受信部５６と、ユーザデータ送信部５８と、ネゴシエーションデータ送信部５０と、を有している。

【００６１】擬似ランダムノイズ生成部７４は擬似ランダムノイズを生成する。トーン信号生成部７８はトーン信号を生成する。ユーザデータ受信部６４はユーザデータを受信し、一方ユーザデータ送信部５８はユーザデータを送信する。ネゴシエーションデータ受信部５６はネゴシエーションデータを受信し、一方ネゴシエーションデータ送信部５０はネゴシエーションデータを送信する。遠隔システム４の各部の動作の詳細を以下に説明する。

【００６２】ユーザデータ受信部６４、ネゴシエーションデータ受信部５６、及び高速データ受信部７２はコンピュータ８４に信号を送信する。ユーザデータ送信部５８、ネゴシエーションデータ送信部５０、及び高速データ送信部６６はコンピュータ８４から発信された信号を受信する。

【００６３】中央局システム２は、複数のチャネル６、８、１０、１２、１４、１６、１８を含み、これらは遠隔システム４の複数のチャネル２０、２２、２４、２６、２８、３０、３２との通信に使用される。この点に関して、実施の形態１においては、チャネル６は、低域フィルタ３４、３６によってフィルタリングされた従来の音声帯域（例えば０Ｈｚ～約４ｋＨｚ）の該当する遠隔システム側の音声チャネル３２と直接通信するために使用される中央局側音声チャネルを備えている。また、遠隔システム側の音声チャネル３３は、遠隔システム４に設けられているが、これは中央局システム２の制御下にはない。遠隔システム側の音声チャネル３３は、通信チャネル５（ただし低域フィルタ３６の前）に平行に接続され、したがって遠隔システム側の音声チャネル３２と同等のサービスを提供する。ただし、遠隔システム側の音声チャネル３３は、低域フィルタ３６の前にあるので、このチャネルには高速データ信号、音声信号のいずれも含まれる。

【００６４】フィルタの周波数特性が異なるように調整することにより、音声チャネル６と３２の間の例えばＩＳＤＮ等の他の低帯域通信方法を用いた通信が行えるようになる。高域フィルタ３８と４０は、４ｋＨｚ以上の周波数スペクトルで通信を行う際に選択される。

【００６５】ビットストリーム８、１０、１２、１４、１６、１８（中央局システム２の）およびビットストリーム２０、２２、２４、２６、２８、３０（遠隔システム４の）は、それぞれ中央局側コンピュータ８２と遠隔システム側のコンピュータ８４の間の通信に使用されるデジタルビットストリームである。発明の範囲と趣旨に逸脱しないかぎり、ビットストリーム８、１０、１２、１４、１６、１８は、図示されたように分散型信号として、あるいは、インターフェースやケーブルにバンドルされ、あるいは信号ストリームに多重化され実行される。例えば、ビットストリーム８、１０、１２、１４、

１６、１８はＲＳ－２３２Ｃ、パラレル、ＩＥＥＥ－１３９４（ＦｉｒｅＷｉｒｅ）、ＵＳＢ（Ｕｎｉｖｅｒｓａｌ　Ｓｅｒｉａｌ　Ｂｕｓ）、ワイヤレス、あるいは赤外線（ＩｒＤＡ）規格に準じたインタフェースとして実行される。同様に、ビットストリーム２０、２２、２４、２６、２８、３０は、図示されたように分散型信号として、あるいは上述されたようにバンドルされ実行される。

【００６６】実施の形態１によれば、ユーザＩＤ、パスワード等のユーザデータは、中央局システム２のユーザデータ受信部６０とユーザデータ送信部６２と、遠隔システム４のユーザデータ受信部６４とユーザデータ送信部５８の間で通信（交換）が実行される。

【００６７】ユーザデータチャネル６０及び６２は、低速通信チャネルであり、ネゴシエーションデータ受信部５２とネゴシエーションデータ送信部５４で送受信されるネゴシエーション手順とは別個に、交換される。

【００６８】通信回線の条件（周波数特性、ノイズ特性、スプリッタの有無等）に関するネゴシエーションデータ（制御情報等）は、中央局システム２のネゴシエーションデータ受信部５２とネゴシエーションデータ送信部５４と遠隔システム４のネゴシエーションデータ受信部５６とネゴシエーションデータ送信部５０の間で交換される。本実施の形態では、これらの通信（ネゴシエーション通信及びユーザ通信）は、異なる周波数帯域を用いて実質的に同時に（並行して）行われる。ただし、通信は、本発明の範囲と趣旨に影響しないかぎり異なる時間帯において連続的に行ってもよい。

【００６９】ユーザデータチャネル通信は、ネゴシエーションチャネルの訂正機能をもつ必要はなく、本発明の範囲及び趣旨には影響しないかぎり省略される。本発明に係るデータ通信の例を、図３～図５を参照して説明する。図3は、中央局システム２の動作を示すフロー図である。図4は、遠隔システム４の動作を示すフロー図である。図5は、本発明のデータ通信システムで使用する信号の周波数スペクトル分布を示す概略ブロック図である。

【００７０】本実施の形態において、中央局システム２と遠隔システム４の間の情報交換のための種々の通信パスでは、周波数分割多重伝送方式（ＦＤＭ）が利用される。ただし、本発明の趣旨と範囲から逸脱しないかぎり他の技術（ＣＤＭＡ、ＴＤＭＡ等）も使用することができる。

【００７１】図５に示すように、通信パス（周波数帯域）ｆ１は、上りネゴシエーションチャネルを構成する。通信パスｆ２（図５）は、下りネゴシエーションチャネルを構成する。高速データ通信に関する制御情報は、上り、下りネゴシエーションチャネルｆ１、ｆ２を通じて交換される。遠隔システム４のネゴシエーションデータ送信部５０は、周波数帯域ｆ１を用いて送信し、中央局システム２のネゴシエーションデータ受信部５２は、周波数帯域ｆ１を用いて受信する。中央局システム２のネゴシエーションデータ送信部５４は、チャネルｆ２の下り回線で送信を行い、遠隔システムのネゴシエーションデータ受信部５６は、周波数帯域ｆ２を用いてデータ受信する。

【００７２】通信パスｆ３（図５）は、ユーザＩＤおよびパスワード等のデータを遠隔システム４に送信するための上りユーザチャネルを構成する。通信チャネルｆ４（図５）は、ユーザＩＤおよびパスワード等のデータを遠隔システム４から受信するための下りユーザチャネルを有する。遠隔システム４のユーザデータ送信部５８は、周波数帯域ｆ３で送信し、中央局システム２のユーザデータ受信部６０は、周波数帯域ｆ３で受信する。中央局システム２のユーザデータ送信部６２は、チャネルｆ４の下り回線を送信し、遠隔システム４のユーザデータ受信部６４は、周波数帯域ｆ４で受信する。このように、ネゴシエーションチャネルとユーザチャネルの情報交換は互いに独立して行われる。

【００７３】本実施の形態において、通信パス（ネゴシエーションチャネル）ｆ１とｆ２の周波数帯域は通信パス（ユーザチャネル）ｆ３とｆ４の周波数帯域より低い。ネゴシエーションチャネルにより低い周波数を用いるのは、周波数がより低ければエラーレートもより低くなるという観測結果からして、それがシステムにとって望ましいからである。ただし、（種々の通信パスの実際の周波数帯域とともに）このように帯域の割当てを行うことは、本発明の趣旨と範囲から逸脱しないかぎり変更することができる。

【００７４】チャネル検査信号は、確立される通信回線（接続）の通信能力を判定するために送信される。検査信号が複数の信号群を有するのであれば、各検査信号群は独立に送信されることが望ましい。本実施例では、信号群は二つ、すなわち、（１）基本チャネル検査信号及び（２）オプションチャネル検査信号とする。

【００７５】通信パスｆ５（図５）は、通信チャネルの回線特性を判定する基本チャネル検査信号を送信する基本チャネル検査信号帯域を有する。同様に、通信パスｆ６（図６）は、通信パスｆ５の周波数帯域よりも高い周波数帯域のオプションチャネル検査信号をオプションで送信するためのオプションチャネル検査信号帯域を有する。遠隔システム４のトーン信号生成部７８は、通信パスｆ５及びｆ６で送信される検査信号を生成する。中央局システム２のトーン信号受信部８０は、通信パスｆ５及びｆ６で検査信号を受信する。基本チャネル検査信号とオプションチャネル検査信号は、異なるタイミングで送信が開始される。

【００７６】本実施の形態において、検査信号は特定の正弦トーン群の信号からなる。検査信号の特定の構成は、本発明の範囲と趣旨を逸脱しない限りにおいて、変

更することができる。例えば、検査信号は、複数の周波数、複数の信号、広域信号、ノイズ信号（特定の帯域の白色雑音等）あるいはスペクトラム拡散信号からなる純粋な正弦群から構成されてもよい。また、検査信号は異なる周波数の副周波数帯域で送信される複数の信号群から構成されていてもよい。更に、検査信号が複数の信号群で構成されている場合、信号の位相は異なってよい。

【００７７】基本チャネル検査信号は、通信接続開始時に送信される。オプションチャネル検査信号（例えばオプションチャネル検査信号帯域ｆ６で送信される検査信号）は、基本チャネル検査信号帯域の周波数帯域より高い周波数帯域でデータ通信を実行することができるかどうかを判定することが望ましい場合にかぎり送出される。しかしながら、本発明の範囲と趣旨を逸脱しない限りにおいて、基本チャネル検査信号と同時に、オプションチャネル検査信号の送信を開始してもよい。

【００７８】遠隔システム４の擬似ランダムノイズ生成部７４（２図）は、５図に示されるように、音声帯域（約０－４ｋＨｚ）における通知信号を送信する。通知信号は、スプリッタの存在の検知及び音声帯域を用いる能力通知機能の検知を行う。この能力通知機能は、高速データ通信及び音声通信の少なくとも一方が利用可能であることを示すものである。通知信号の周波数（スペクトラム）に関しては、特定周波数信号（あるいはＦＭ変調信号）の使用は好ましくない。例えば、ファクシミリ接続の為のＴ．３０プロトコルにおけるＣＮＧ信号、Ｖ．８プロトコルにおけるＣＩ信号等は、進行中の音声帯域通信と干渉する可聴信号を発生させてしまう。その為、本実施の形態においては、通知信号は、擬似ランダムノイズ等のスペクトラム拡散信号であることが好ましい。しかしながら、他のタイプの信号も使用できる。適正な電力値のスペクトラム拡散信号を用いることにより、音声通信と干渉する信号の受信を防ぐことができる。

【００７９】本実施の形態では、通知信号は音声帯域でデータ通信能力が利用可能であることを示す表示信号を有する。この表示信号により、他の通信端末（例えば、遠隔システムが表示信号を送出している時の中央局システム２）は、高速データ通信機能が利用できるか識別できる。

【００８０】通知信号は、更に、通信システムが周波数分離部（スプリッタ等）を使用しているかどうかを識別する為に用いることができる。通信システムにおいては、スプリッタを使用することにより、通信装置が高周波数ポートに接続されている時に、音声帯域信号を受信しないようにする。従って、通知信号の受信がない場合は、スプリッタがその通信システムに設置されていることを示している。

【００８１】図３と図４のフローチャートを参照して以下を説明する。フローチャートには幾つかの判定ブランチがあるので、種々の工程の組み合わせが可能である。最初に模式的フロー、（すなわち、直線フロー）について、次にブランチを伴うフローについて説明する。　手順（フローチャート）における経路は、設備配列（例えば、スプリッタが通信パスにあるか、両サイドが本発明を有するか、外部干渉が通信チャネル５の品質を低下させないか、等）に依存する。フローは関連通信装置間のネゴシエーションについて説明しているので、個々の関連装置の動作は図３と図４の間のピンポン（ジグザグ）方式で説明される。図３は、中央局システム２のテストネゴシエーションブロック４６による処理であり、図４は遠隔システム４のテストネゴシエーションブロック４８による処理である。

【００８２】ステップ（以下ＳＴと略す）２００において、所定周波数のパイロットトーン信号は遠隔システム４のネゴシエーションデータ送信部５０によって送信される。同時に、擬似ランダムノイズが擬似ランダムノイズ生成部７４によって送信される。

【００８３】ＳＴ２０２において、中央局システム２は、ネゴシエーションデータ受信部５２を用い、ネゴシエーション上り回線帯を検査し、上りパイロット信号が送信中であるか判定する。ネゴシエーション上りデータパイロット信号が検出されると、中央局システム２は、ネゴシエーションデータ送信部５４を用い、下りネゴシエーションパイロット信号の送信を開始する。

【００８４】ＳＴ２０８において、遠隔システム４は下りパイロットトーン信号を検出したかどうかを判定する。ＳＴ２０８において、下りパイロットトーン信号が遠隔システム４によって検出された場合、ＳＴ２１２が実行され、ネゴシエーションデータ送信部５０は、上りネゴシエーションチャネルｆ１を介して、上りネゴシエーションデータの送信を開始する。

【００８５】ＳＴ２１４において、中央局システム２が有効データを検出すると、ネゴシエーションデータ送信部５４は下りネゴシエーションチャネルｆ２を介して下りネゴシエーションデータの送信を開始する。一方、中央局システム２が有効なデータを検出しない場合、データ検出動作は繰り返し実行される。

【００８６】ＳＴ２１８において、遠隔システム４は有効なネゴシエーション下りデータが検出されたかどうかを判定する。遠隔システム４が有効データを検出すると、遠隔システム４のユーザデータ送信部５８は上りユーザチャネルｆ３を介して上りユーザデータの送信を開始する（ＳＴ２２０）。一方、遠隔システム４が有効データの検出に失敗すると、ＳＴ２１８は有効データが検出されるまで繰り返される。

【００８７】遠隔システム４は、周波数帯ｆ５（例えば、基本チャネル検査信号チャネル）の基本チャネル検査信号（ＳＴ２２２）も送信する。この信号に応じて、中央局システム２は、回線特性の検査を開始する。

【００８８】中央局システム２はユーザデータ受信部６０で有効な上りユーザデータが検出されるかどうかを判定する（ＳＴ２２４）。ＳＴ２２４の結果が否定的である場合、このステップは肯定的な結果が出るまで繰り返し実行される。その時点で、処理はＳＴ２２６に移り、ユーザデータ送信部６２は下りユーザチャネルｆ４を介して下りユーザデータの送信を開始する。

【００８９】次に、ＳＴ２２８が実行され、中央局システム２のトーン信号受信部８０は、遠隔システム４のトーン信号生成部７８によって発信された基本チャネル検査信号の受信を開始する。

【００９０】遠隔システム４において、ユーザデータ受信部６４は有効な下りユーザデータを受信しているかどうかを判定する（ＳＴ２３０）。判定結果が否定的の場合、ＳＴ２３０は肯定的結果が出るまで再実行される。遠隔システム４が有効な下りユーザデータ（例えば肯定的判定結果）を受信した場合、すべての通信チャネルが確立されている。

【００９１】この時点でＳＴ２３２が実行され、遠隔システム４は、その通信能力と通信方法情報とを、上りネゴシエーションパスを介して繰り返し送信する。同時に、ＳＴ２３４が実行され、中央局システム２はその通信能力と希望する通信条件（例えばオプションチャネル検査信号情報帯域ｆ６（ＳＴ２３６）が使用できる等の表示）の送信を開始する。

【００９２】遠隔システム４が、オプションチャネル検査信号の使用を許可する表示を中央局システムから受信すると（ＳＴ２３６は肯定的）、遠隔システム４のトーン生成部７８はオプションチャネル検査信号の送信を開始する（ＳＴ２３８）。一方、ＳＴ２３６が否定的であると処理はＳＴ２４４に移行する。

【００９３】その間、中央局システム２のトーン信号受信部８０は、スペクトル情報を計算するために信号のスペクトル分析を実行し（ＳＴ２４０）、スペクトル情報は次に下りネゴシエーションパスｆ２を介して遠隔システム４に送信される（ＳＴ２４２）。

【００９４】遠隔システム４は、スペクトル情報が受信されたと判定するまでＳＴ２４４で待機する。スペクトル情報が受信されると、遠隔システム４は、分析を行い、能力、チャネル制限等を判定し、使用する通信方法（規格）のタイプ（例えば、ＡＤＳＬ、ＣＤＳＬ等）に関する最終判定を行う（ＳＴ２４６）。次に遠隔システム４は、基本チャネル検査信号（もし送信されているならオプションチャネル検査信号も）の送信を停止する（ＳＴ２４８）。遠隔システム４は最終判定に関する（を示す）情報の送信を（上りネゴシエーションパスｆ１を用いて）繰り返す（ＳＴ２５０）。

【００９５】中央局システム２は、遠隔システム４から最終判定に関する情報を受信したと判定するまで待機する（ＳＴ２５２）。中央局システム２が最終判定の受信を検出すると、ＳＴ２５４が実行され下りネゴシエーションデータと下りユーザデータの送信を停止する。

【００９６】遠隔システム４側では、遠隔システム４はエネルギー（キャリア）の減衰が検出されるまで待機し、その時点で、上りネゴシエーションデータおよび上りユーザデータの送信は停止される（ＳＴ２５８）。その後、遠隔システム４は所定の期間が終了するまで待機し（ＳＴ２６０）、その後、選択された高速通信システムタイプの手順の初期化が開始される。ネゴシエーション手順および高速初期化手順が完了後、中央局システム２と遠隔システム４の間で適切な高速通信チャネルが利用可能となる。

【００９７】中央局システム２のトーン信号受信部８０が、ＳＴ２０２でパイロットトーン信号を検出できない場合、中央局システム２の擬似ランダムノイズ受信部７６は、約０Ｈｚ～４ｋＨｚの音声帯域の擬似ランダムノイズが存在するか（検出されるか）ＳＴ２０４で判定する。擬似ランダムノイズが検出されると、従来の音声帯域データ通信が実行でき（ＳＴ２０６）、チャネルは高速通信をサポートできないが機器は高速通信をサポートできるかようであると判定される。すなわち、本発明は、Ｖ．８、Ｖ．８ｂｉｓ、Ｖ．３４プロトコル等の従来の音声帯域のフォールバック通信接続を行うと判定する。擬似ランダムノイズが検出されない場合、ＳＴ２０２はパイロットトーン信号をもう一度検出するために再実行される。このように、音声帯域内で通知信号（擬似ランダムノイズ等）を発信し、通知信号を受信できるかどうかを判定することによって、高速データ通信機能が利用可能かどうかを判定することができる。

【００９８】しかしながら、もし高速データ通信が実行できなければ、本発明は、音声帯域通信手順へフォールバックするようにしている。例えば、高速データ通信を実行しない時は、Ｖ．３４プロトコルを使用してデータ通信を行うことができる。ＳＴ２０８において、下りパイロットトーン信号が検出されない場合は、ＳＴ２１０が実行され、遠隔システム４が音声帯域手順（Ｖ．８、Ｖ．８ｂｉｓ等）あるいは代わりの高速手順を開始する。

【００９９】要約すれば、ネゴシエーションブロック４６及び４８は、通信チャネルと関連機器（中央局システム側と遠隔システム側の両サイドにおける）を解析し、適切な通信規格を選択する。

【０１００】図６は、本発明の実施の形態１に係る装置の概念図を示す。中央局システムスプリッタ３０４は、ＬＰＦ３４及びＨＰＦ３８を有し、図２に示したテストネゴシェーションブロック４６の各ブロック及びｘＴＵ－Ｃ３０２で図示されるモデム６８及び７０に信号を供給する。ＰＳＴＮスイッチ３００は、チャネル５に接続される。電話３０６は、便宜上、図２に示す音声チャネル３３に接続されている。しかしながら、本発明の範囲

と趣旨から離脱しないかぎり、電話３０６は、音声チャネル３２に接続することができる。種々の変形を本実施の形態に対して加えることができる。図７から図１２は、変更された概略ブロック図を示すが、本発明はこの実施形態に制限されない。実施の形態１と同一の構成要素には、同一の参照番号が付されている。

【０１０１】図７及び図８は、本発明の実施の形態２を示す。本実施の形態では、本発明は遠隔システム４のみで実行され、中央局システム２は高速通信互換性がない。遠隔システム４が中央局システム２と接続しようとすると、ＳＴ２０８（図４）において下りパイロット信号が検出できない。その結果、ＳＴ２１０で音声手順が開始される。図７に示すように、チャネル５は、ＰＳＴＮスイッチ３００に送信する音声帯域信号を示す。

【０１０２】図示されていないが、本実施の形態の変更としては、中央局システム２が本発明を実施し、遠隔システム端末４が高速データ通信を使用しない場合が考えられる。

【０１０３】この状況では、中央局システム２は、ＳＴ２０２で、上りパイロットトーンを検出できないが、疑似乱数信号を検出すると、ＳＴ２０６で音声帯域手順を開始する。同様に、中央局システム２は、ＳＴ２０２で上りパイロットトーンを検出できず、ＳＴ２０４で疑似乱数信号も検出できないと、一定時間後に音声帯域手順を開始する。図９と図１０に本発明の実施の形態３を示す。本実施の形態は、遠隔システム側のｘタイプの送信ユニット（ｘＴＵ－Ｒ）３５０を電話（網）３０６から分離するために、遠隔システムのスプリッタ８６が遠隔システム４に設けられている点で実施の形態１と異なる。この構成においては、スプリッタ８６を用いることにより高速帯域と音声帯域とのスプクトラム間の干渉は著しく減少し、ｘＴＵＯＣ（３０２）とｘＴＵ－Ｒ（３５０）の性能は改良される。図１０に示すように、スプリッタ８６は低域フィルタ８８と高域フィルタ９０を備える。

【０１０４】本実施の形態において、擬似ランダムノイズは高域フィルタ９０を通過しない。従って、中央局システム２の擬似ランダムノイズ受信部７６は、これはスプリッタが存在することを示す、遠隔システム４によって生成された擬似ランダムノイズを受信しないこととなる。この情報はネゴシエーション期間に交換される。その結果、スプリッタフィルターの検出は、自動的に行われ表示される。

【０１０５】本実施の形態では、電話３０６（図９）はチャネル３３（図１０）に接続されている。図９の中央局システム２の構成は、図６の中央局システム２の構成と同じである。

【０１０６】本発明の実施の形態４を図１１に示す。本実施の形態において、インテリジェントスイッチ３１４は、テストネゴシエーションブロック４６で実行される機能を有し、適切なｘＴＵ－Ｃ（３１６あるいは３１８等）を選択し、選択された通信規格（ＡＤＳＬ、ＶＤＳＬ、ＩＳＤＮ、Ｖ．３４等）を確立する。

【０１０７】本発明の実施の形態５を図１２に示す。本実施の形態において、中央局システム２は、複数の部分（例えば第１部分３２０、第２部分３２２）に分割され、通信動作は複数のサービスプロバイダによって実行することができる。各部分の構成は本質的に図９に示す構成と同じである。第１部分３２０及び第２部分３２２は、前述した実施の形態のいずれかと同様に構成されている。既に述べたように、スプリッタ３０４及び３２８は、高速通信から音声帯域信号を分離する為に設置される。

【０１０８】本実施の形態によれば、公衆電話回線網（ＰＳＴＮ）スイッチ３００及び３２６と、ｘＴＵ－Ｃユニット３０２及び３３０とは、特定のサービスを提供するサービスプロバイダーによって構成される。遠隔システムがサービスの要求を開始した時、（下りネゴシエーションデータの送信に対応する上りネゴシエーションデータにより判定されたような）所望のサービスを提供できるシステムだけが遠隔システムに接続される。

【０１０９】本発明では、複数の通信規格の中から、使用すべき最適通信規格を迅速かつ効果的に判定する。特に、本発明では、複数の通信規格から一つの通信規格を効率的に選択し、チャネル特性を判定、明確にしたのち使用し、また通信パスにおけるスップリッタの有無を無理なく判定することができる。これらにより、高速通信パスが利用可能になる前に、ユーザデータを中央局システムと遠隔システム間で交換することができる。

【０１１０】本発明では、データ通信はネゴシエーション手順と同時に開始してもよい。すなわち、ユーザ通信（データ通信等）は、回線検査とネゴシエーション動作と同時に行うことが可能である。しかしながら、ユーザ通信の送信は、本発明の趣旨と範囲から逸脱しないかぎり、ネゴシエーション動作実施後に開始することもできる。

【０１１１】本発明は特定の手段、材料、機器を取り上げて説明したが、本発明はここに開示した事項に限定されるものではなく、請求の範囲の同等なあらゆる状況に適応される。例えば、コンピュータ８２及び８４は、通信チャネル５を介して送信されるデータ信号を生成する他の装置（ネットワーク機器等）により代替することができる。

【０１１２】

【発明の効果】以上の説明から明らかなように、本発明によれば、既存の通信環境に影響を及ぼすことなく、２つの通信システム間で、ネゴシェーション、ユーザーデータの交換を行うとともに、回線特性の検査を行い、通信回線に適した通信規格、データ通信手順を短時間で決定することができる。

【図面の簡単な説明】
【図１】本発明の実施の形態１に係る通信装置を使用したデータ通信システムのブロック図
【図２】実施の形態１に係るデータ通信システムの具体的な構成を示すブロック図
【図３】実施の形態１に係るデータ通信システムの中央局システム側における動作を示すフロー図
【図４】実施の形態１に係るデータ通信システムの遠隔システム側における動作を示すフロー図
【図５】実施の形態１に係るデータ通信システムにおいて使用されるスペクトル分布を示す概略図
【図６】実施の形態１に係るデータ通信システムを示す概略ブロック図
【図７】本発明の実施の形態２に係る通信装置を使用したデータ通信システムを示す概略ブロック図
【図８】実施の形態２に係るデータ通信システムの具体的な構成を示すブロック図
【図９】本発明の実施の形態３に係る通信装置を使用したデータ通信システムを示す概略ブロック図
【図１０】実施の形態３に係るデータ通信システムの具体的な構成を示すブロック図
【図１１】本発明の実施の形態４に係る通信装置を使用したデータ通信システムの概略ブロック図
【図１２】本発明の実施の形態５に係る通信装置を使用したデータ通信システムの概略ブロック図
【符号の説明】
１　メイン分配フレーム（ＭＤＦ）
２　中央局システム
３　ネットワークインタフェースデバイス（ＮＩＤ）
４　遠隔システム
５　通信チャネル
３４，３６　低域フィルタ
３８，４０　高域フィルタ
４６，４８　テストネゴシェションブロック

【図１】

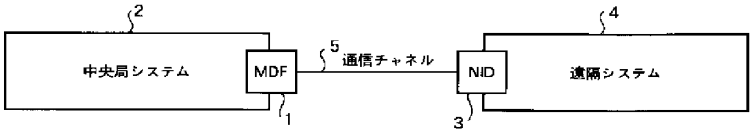

【図２】

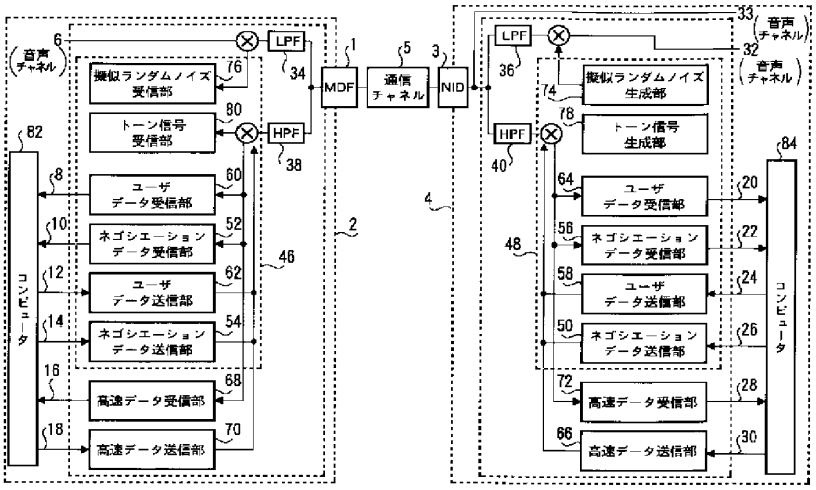

【図３】

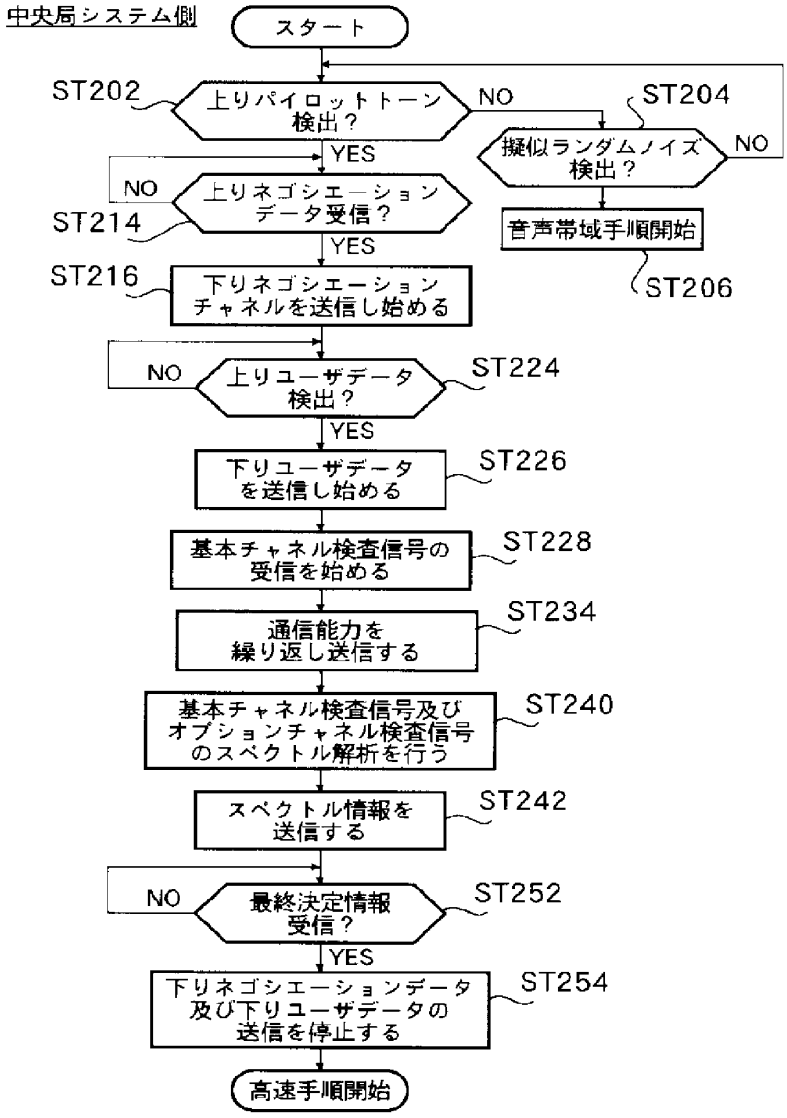
中央局システム側
スタート
ST202
上りパイロットトーン検出？
NO
ST204
擬似ランダムノイズ検出？
NO
YES
NO
上りネゴシエーションデータ受信？
ST214
YES
音声帯域手順開始
ST206
ST216
下りネゴシエーションチャネルを送信し始める
NO
上りユーザデータ検出？
ST224
YES
下りユーザデータを送信し始める
ST226
基本チャネル検査信号の受信を始める
ST228
通信能力を繰り返し送信する
ST234
基本チャネル検査信号及びオプションチャネル検査信号のスペクトル解析を行う
ST240
スペクトル情報を送信する
ST242
NO
最終決定情報受信？
ST252
YES
下りネゴシエーションデータ及び下りユーザデータの送信を停止する
ST254
高速手順開始

【図４】

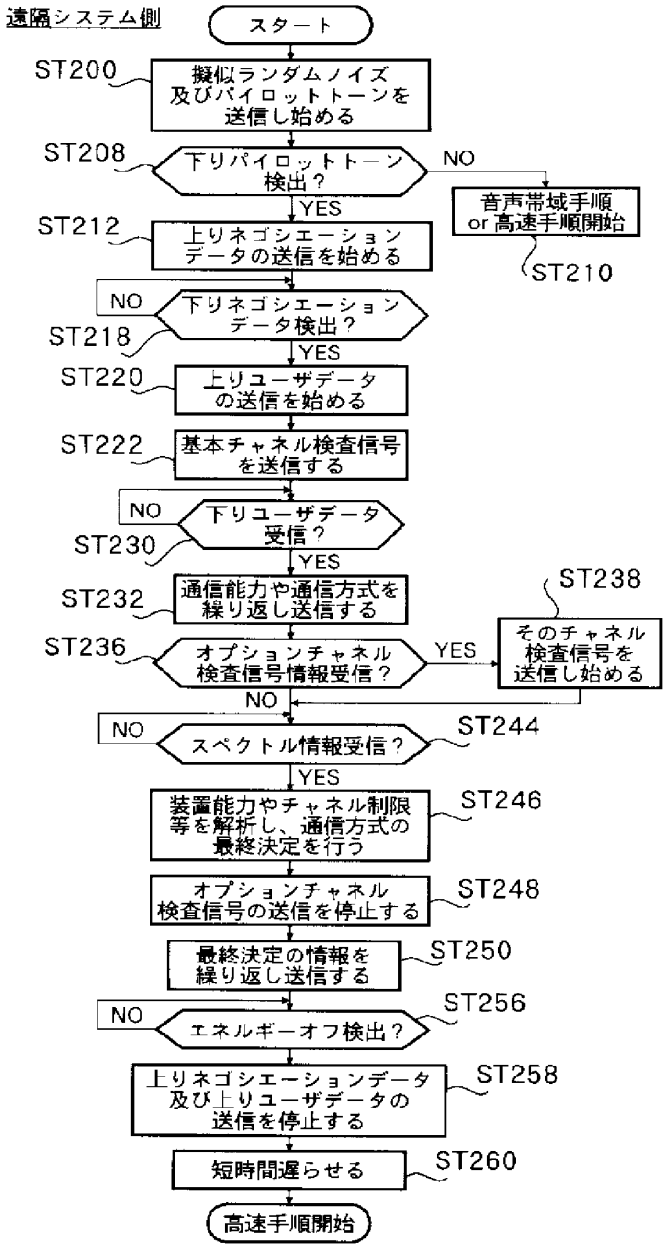
遠隔システム側
スタート
ST200
擬似ランダムノイズ及びパイロットトーンを送信し始める
ST208
下りパイロットトーン検出？
NO
音声帯域手順 or 高速手順開始
ST210
YES
ST212
上りネゴシエーションデータの送信を始める
NO
下りネゴシエーションデータ検出？
ST218
YES
ST220
上りユーザデータの送信を始める
ST222
基本チャネル検査信号を送信する
NO
下りユーザデータ受信？
ST230
YES
ST232
通信能力や通信方式を繰り返し送信する
ST238
そのチャネル検査信号を送信し始める
ST236
オプションチャネル検査信号情報受信？
YES
NO
NO
スペクトル情報受信？
ST244
YES
装置能力やチャネル制限等を解析し、通信方式の最終決定を行う
ST246
オプションチャネル検査信号の送信を停止する
ST248
最終決定の情報を繰り返し送信する
ST250
NO
エネルギーオフ検出？
ST256
上りネゴシエーションデータ及び上りユーザデータの送信を停止する
ST258
短時間遅らせる
ST260
高速手順開始

【図５】

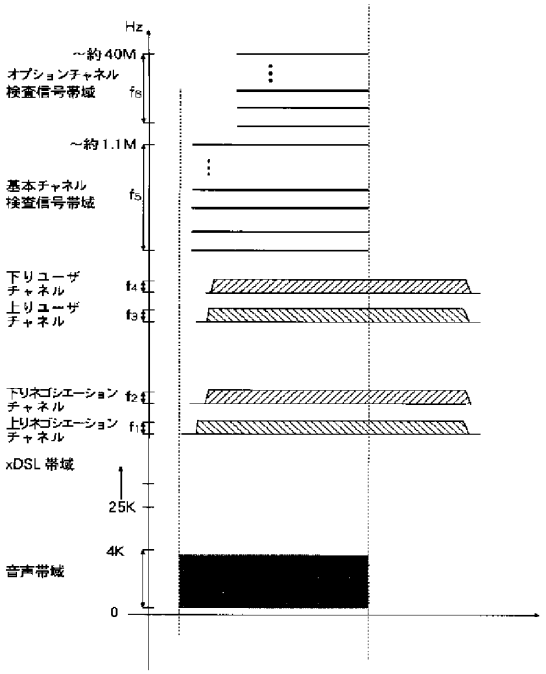
Hz
～約40M
オプションチャネル
検査信号帯域
f8
～約1.1M
基本チャネル
検査信号帯域
f5
下りユーザ
チャネル
f4
上りユーザ
チャネル
f3
下りネゴシエーション
チャネル
f2
上りネゴシエーション
チャネル
f1
xDSL 帯域
25K
4K
音声帯域
0

【図６】

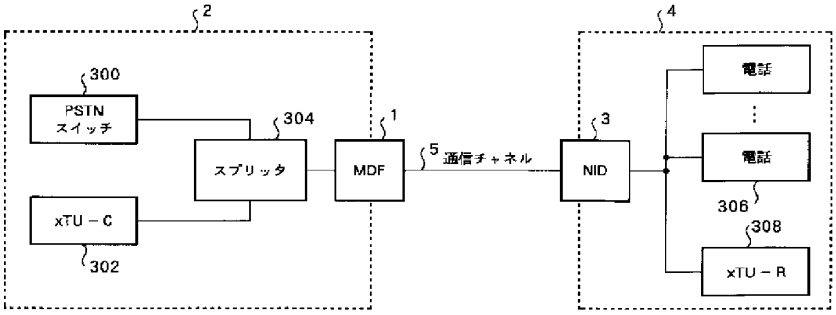
2
300
PSTN
スイッチ
304
スプリッタ
xTU－C
302
1
MDF
5
通信チャネル
3
NID
4
電話
電話
306
308
xTU－R

【図7】

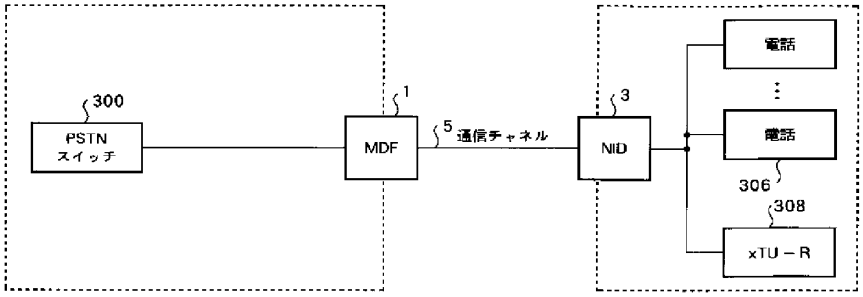
300
PSTN
スイッチ
MDF
1
5
通信チャネル
NID
3
電話
電話
306
308
xTU－R

【図8】

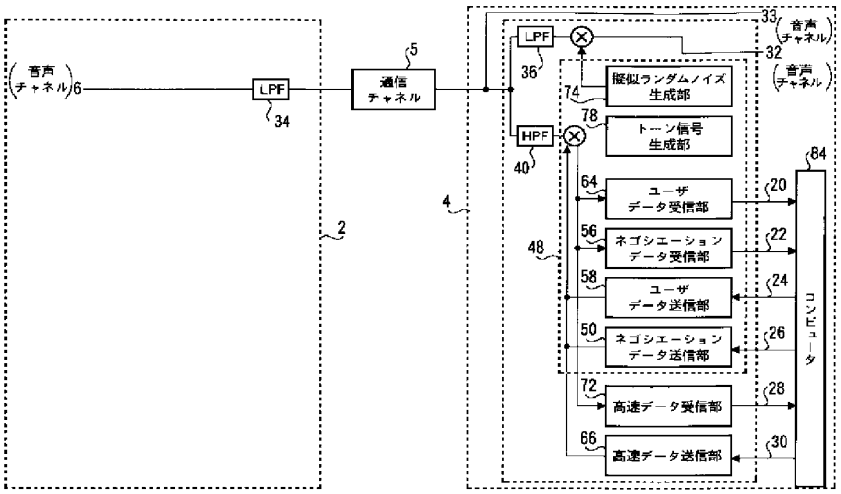
音声
チャネル
6
LPF
34
通信
チャネル
5
2
4
LPF
36
33
音声
チャネル
32
音声
チャネル
擬似ランダムノイズ
生成部
74
HPF
40
78
トーン信号
生成部
64
ユーザ
データ受信部
20
56
ネゴシエーション
データ受信部
22
48
58
ユーザ
データ送信部
24
50
ネゴシエーション
データ送信部
26
72
高速データ受信部
28
66
高速データ送信部
30
64
コンピュータ

【図9】

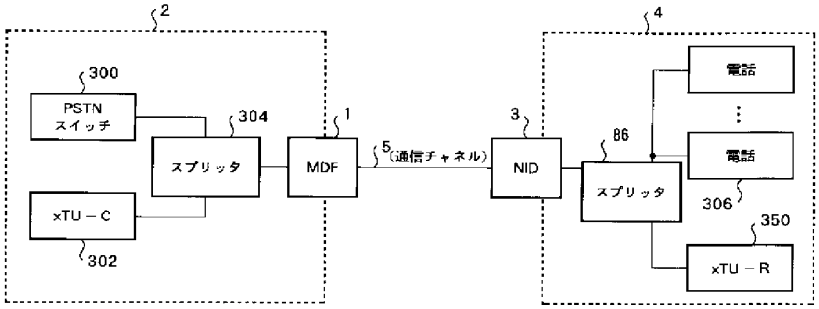
2
300
PSTN
スイッチ
304
スプリッタ
xTU－C
302
MDF
1
5
(通信チャネル)
3
NID
4
86
スプリッタ
電話
電話
306
350
xTU－R

【図１０】

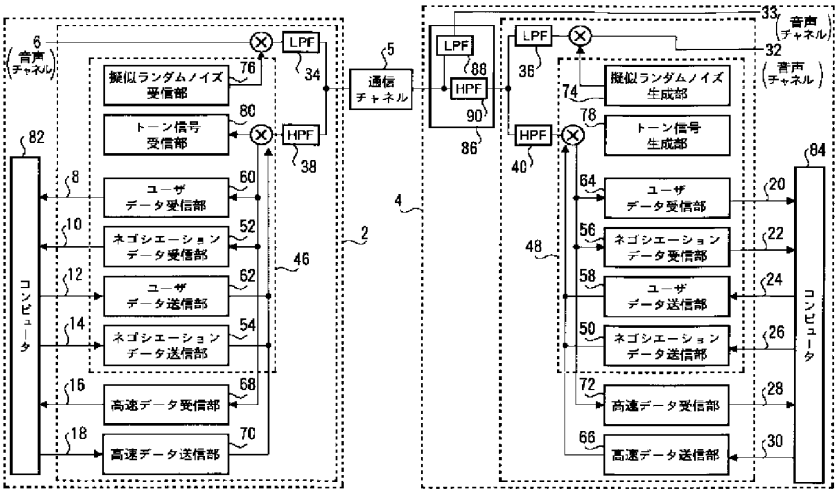
6
音声チャネル
LPF
34
擬似ランダムノイズ受信部
76
トーン信号受信部
80
HPF
38
82
コンピュータ
8
ユーザデータ受信部
60
10
ネゴシエーションデータ受信部
52
12
ユーザデータ送信部
62
14
ネゴシエーションデータ送信部
54
16
高速データ受信部
68
18
高速データ送信部
70
46
2
4
5
通信チャネル
LPF
88
HPF
90
86
LPF
36
HPF
40
33
音声チャネル
32
音声チャネル
擬似ランダムノイズ生成部
74
トーン信号生成部
78
84
64
ユーザデータ受信部
20
56
ネゴシエーションデータ受信部
22
48
58
ユーザデータ送信部
24
50
ネゴシエーションデータ送信部
26
72
高速データ受信部
28
66
高速データ送信部
30
コンピュータ

【図１１】

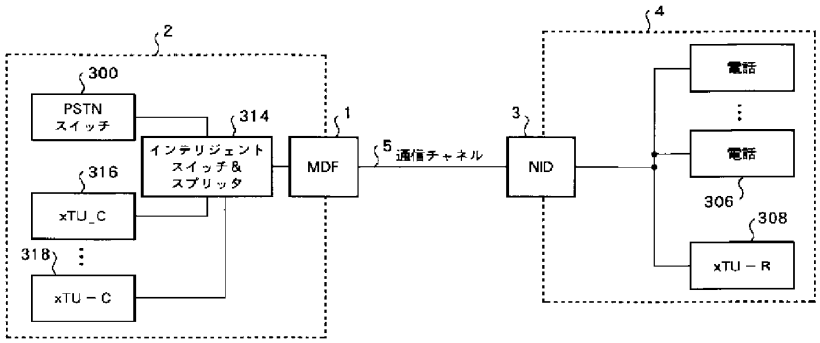
2
300
PSTN
スイッチ
314
インテリジェント
スイッチ&
スプリッタ
316
xTU_C
318
xTU－C
1
MDF
5
通信チャネル
3
NID
4
電話
電話
306
308
xTU－R

【図１２】

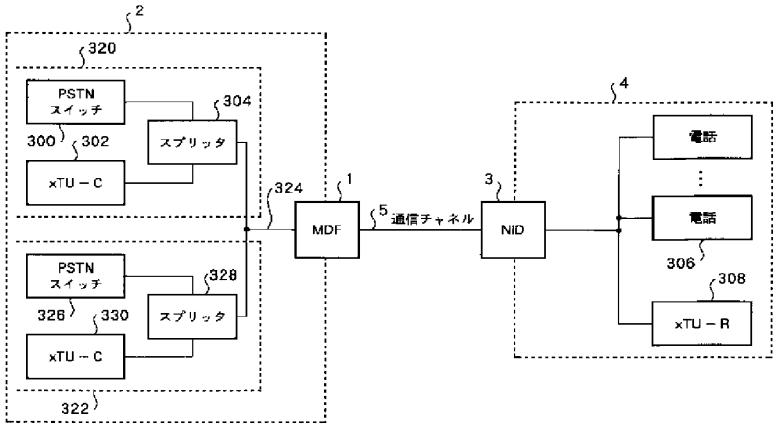
2
320
PSTN
スイッチ
304
300
302
スプリッタ
xTU－C
324
1
MDF
5
通信チャネル
3
NID
4
電話
電話
306
308
xTU－R
PSTN
スイッチ
328
326
330
スプリッタ
xTU－C
322

METHOD FOR ASSIGNING DATA AND POWER IN DISCRETE MULTI-TONED COMMUNICATION SYSTEM

Publication number: JP11317723 (A)
Publication date: 1999-11-16
Inventor(s): LEVIN HOWARD E; MAY MICHAEL R; PENDLETON MATTHEW A; JOHNSON TERENCE +
Applicant(s): MOTOROLA INC +
Classification:
- international: ***H04J11/00; H04L27/26; H04L29/08; H04M3/00; H04M11/00;*** **H04J11/00; H04L27/26; H04L29/08; H04M3/00; H04M11/00;** (IPC1-7): H04J11/00; H04L29/08; H04M3/00; H04M11/00
- European: H04L5/00C7A; H04L5/00C4A
Application number: JP19990004993 19990112
Priority number(s): US19980007218 19980114; US19980007390 19980114

Also published as:
JP4282805 (B2)
EP0930752 (A2)
EP0930752 (A3)

Abstract of **JP 11317723 (A)**

PROBLEM TO BE SOLVED: To optimize the power consumption of a discrete multi-toned(DMT) system by reducing power with respect to a not-using carrier among plural carriers assigned with bits.
SOLUTION: Data transmitted to a remote terminal 20 through a transmission medium 15 by a telephone station 30 is received by a transmitter/receiver 24 and given to a system controller 22 to process. In addition, an upstream signal from the terminal 20 is also processed by a system controller 34 through the transmitter/receiver 32 of the station 30. Then, carriers, namely bins, are sorted in an order from a maximum capacity to a minimum capacity to advance from the carrier of the maximum capacity to that of the minimum capacity to assign a transmission data rate and a data capacity is assigned until a designated data rate is obtained.; Since a maximum data rate is assigned to a bin at first, the number of using carriers for transmitting data by a desired data rate is minimized to minimize power on an unused carrier. Thereby, an optimum power quantity can be dissipated.

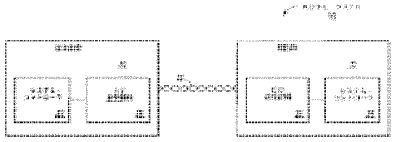

Data supplied from the ***espacenet*** database — Worldwide

(19)日本国特許庁（ＪＰ）　(12) **公開特許公報（Ａ）**　(11)特許出願公開番号

特開平11－317723

(43)公開日　平成11年(1999)11月16日

(51)Int.Cl.[6]	識別記号	ＦＩ		
Ｈ０４Ｊ　11/00		Ｈ０４Ｊ	11/00	Ｚ
Ｈ０４Ｌ　29/08		Ｈ０４Ｍ	3/00	Ｂ
Ｈ０４Ｍ　3/00			11/00	３０２
11/00	３０２	Ｈ０４Ｌ	13/00	３０７Ｚ

審査請求　未請求　請求項の数５　ＯＬ　（全 11 頁）

(21)出願番号　特願平11－4993

(22)出願日　平成11年(1999)１月12日

(31)優先権主張番号　００７２１８

(32)優先日　1998年１月14日

(33)優先権主張国　米国（ＵＳ）

(31)優先権主張番号　００７３９０

(32)優先日　1998年１月14日

(33)優先権主張国　米国（ＵＳ）

(71)出願人　390009597
モトローラ・インコーポレイテッド
ＭＯＴＯＲＯＬＡ　ＩＮＣＯＲＰＯＲＡＴＲＥＤ
アメリカ合衆国イリノイ州シャンバーグ、イースト・アルゴンクイン・ロード1303

(72)発明者　ハワード・イー・レビン
アメリカ合衆国テキサス州オースチン、パラマウント・アベニュー2103

(72)発明者　マイケル・アール・メイ
アメリカ合衆国テキサス州オースチン、ロチェスター・レーン13110

(74)代理人　弁理士　大貫　進介　（外１名）

最終頁に続く

(54)【発明の名称】　離散マルチ・トーン通信システムにおいてデータおよびパワーを割り当てる方法

(57)【要約】

【課題】　離散マルチ・トーン（ＤＭＴ）通信システムにおいてパワー消費の最適化を図るデータおよびパワー割り当て方法を提供する。

【解決手段】　ビット割り当て容量にしたがって、キャリアをソートする。次に、最大のビット割り当て容量を有するキャリアから最少のビット割り当て容量を有するキャリアの順に、全てのビットを割り当てるまで指定のビット・レートを得るために必要なビット数を割り当てる。割り当て後、使用されていないビンのパワーを全て削減する。使用されていないビンは劣悪なビンを含み、データを宛先に確実に送信できないキャリアとして識別する。マージナル・ビンは、データを宛先に送信可能となり得るキャリアとして識別する。劣悪なビンのパワーを削減し、マージナルまたは良好なビンに割り当て、ビット・レートの上昇を可能にする。または、マージナル・ビンのパワーを削減し、良好なビンに割り当てる。

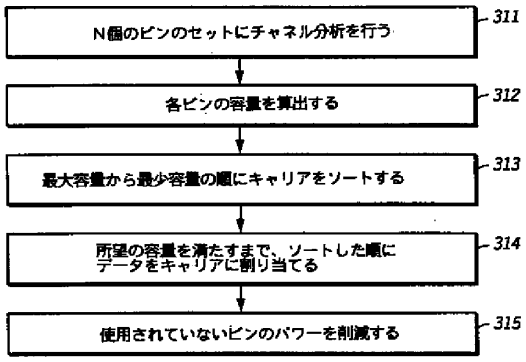

【特許請求の範囲】
【請求項１】離散マルチ・トーン通信システムを構成する方法であって：複数のキャリア上においてチャネルの分析を行う段階；前記複数のキャリアの一部にデータ容量を割り当てる段階であって、ビットを割り当てられた前記複数のキャリアの前記一部は使用中のキャリアであり、前記複数のキャリアの内ビットが割り当てられない一部は、使用されていないキャリアを含む段階；および前記使用されていないキャリアに対するパワーを削減する段階；から成ることを特徴とする方法。
【請求項２】前記使用されていないキャリアは、所定の性能基準を満たさないことを特徴とする請求項１記載の方法。
【請求項３】前記所定の性能基準は、指定されたエラー率以下の所定のデータ・レートを指定することを特徴とする請求項２記載の方法。
【請求項４】前記複数のキャリアをソートし、ソート・リストを作成し、ビット・ローディング容量にしたがって、前記ソート・リストをソートする段階；を更に含み；前記チャネルの分析を行う段階は、ビット・ローディング容量を判定する段階を含み、　前記データ容量を前記複数のキャリアに割り当てるステップは、前記データ容量の全てを割り当てるまで、前記ソート・リストにしたがって使用中のキャリアに前記データを割り当てる段階を更に含み、最大のビット・ローディング容量を有するビンは、最大のビット・ローディング容量未満を有するビンの前に、完全に充填されることを特徴とする請求項１記載の方法。
【請求項５】前記使用中のキャリアの少なくとも１つに対するパワーを増大させる段階を更に含むことを特徴とする請求項１記載の方法。
【発明の詳細な説明】
【０００１】
【発明の属する技術分野】本発明は、一般的に、通信システムに関し、更に特定すれば、離散マルチ・トーン・システム(discrete multi-tone communication system)を構成する方法に関するものである。
【０００２】
【従来の技術】テレビ会議(video conferencing)やインターネット・アクセスのような、高データ・レート双方向サービスを、住宅および小規模事務所の顧客にも一層入手し易くするためには、高速データ通信経路が必要である。かかる高データ・レートサービスには光ファイバ・ケーブルが好適な伝送媒体であるが、既存の通信ネットワークにおいては容易に使用することができず、光ファイバ・ケーブルを設置する費用は法外に高い。現行の電話配線接続は、ツイストペア媒体で構成されており、ビデオ・オン・デマンドのような双方向サービス，またはそれよりも更に高速な相互接続に必要な高データ・レートに対応するように設計されたものはない。これに応じて、非対称ディジタル加入者回線（ＡＤＳＬ：Asymmetrical Digital Subscriber Line）技術が開発され、既存のツイストペア接続の固定帯域幅以内で伝送能力を向上させることにより、新たな光ファイバ・ケーブルの設置を必要とすることなく、双方向サービスの提供を可能にした。
【０００３】離散マルチ・トーン（ＤＭＴ：Discrete Multi-Toned）とは、ツイストペア接続のような通信チャネルの使用可能帯域幅を、多数の周波数サブチャネルに分割するマルチ・キャリア技術のことである。これらのサブチャネルは、周波数ビン(frequency bin) またはキャリアとも呼ばれている。ＤＭＴ技術は、ＡＮＳＩＴ１Ｅ１．４（ＡＤＳＬ）委員会によって、ＡＤＳＬシステムに用いるために採用されている。ＡＤＳＬでは、ＤＭＴを用いて、エンド・ユーザに向かう下流伝送に２６ｋＨｚから１．１ＭＨｚまでの２５０個の別個の４．３１２５ＫＨｚサブチャネルを発生し、エンドユーザによる上流伝送のために２６ｋＨｚから１３８ｋＨｚまでの２５個のサブチャネルを発生する。各ビンには、各伝送と共に送るある数のビットが割り当てられる。ＡＤＳＬシステムに対してビン毎に割り当てられるビット数は、０，および２ないし１５ビットである。
【０００４】ＡＤＳＬシステムを用いてリアル・タイム・データを送信する前に、初期化プロセスを行う。初期化プロセスの第１部分の間、活性化および承認ステップを行う。ＡＤＳＬシステムの電力投入に続いて送信活性化トーンを発生するのは、このステップの間である。送受信機トレーニングは、初期化プロセス中の次のステップである。送受信機トレーニングの間、ＡＤＳＬシステムの等化フィルタをトレーニングし、システムの同期を得る。次に、初期化プロセスの一部として、チャネル分析および交換を行う。チャネル分析および交換の間、チャネルの信号対ノイズ比（ＳＮＲ）を判定し、ビンのビット・ローディング・コンフィギュレーション(bit loading configuration) およびその他のコンフィギュレーション情報を転送する。
【０００５】初期化プロセスに続いて、リアル・タイム・データ送信が開始する。リアル・タイム・データ送信の間、提案されているＡＮＳＩ規格の実施態様は、各キャリアを公称パワー量(nominal amount of power) で送信することを要求する。公称パワー量は、最大パワー量となるように提案されており、これは、パワー利得微調整のばらつきがキャリア間で発生するだけで、全てのビン全体に対してほぼ同一である。しかしながら、公称送信パワー量を各キャリアに割り当てることには欠点がある。例えば、１つの問題は、データを全く送信していないキャリアに公称パワー量を割り当てることに伴い、不要のパワー消費が生ずることである。これが発生するのは、要求されたデータ・レートが、回線上で使用可能な最大データ・レート未満の場合である。この余分なパワ

ーのために、パワー消費に関してシステムに余分なコストがかかることになる。未使用ビンにパワーを送信することに対する他の問題は、キャリアの信号が長い回線距離の間に減衰するために、所望の確実性でデータを送信できない地点が生ずることである。これが発生すると、劣悪なビンのビット割り当て容量が０にセットされるが、しかしながら、提案されている仕様の実施態様の下では、その送信パワーは、現在使用されていないビンにも割り当てられ続ける。したがって、高データ・レートがない場合でも、パワー・コストが高くなる。ＡＤＳＬ仕様に伴う他の問題は、隣接する回線上において同様の周波数で信号を送信している場合、クロストーク干渉が発生することである。

【０００６】

【発明が解決しようとする課題】典型的なＤＭＴシステムでは、その消費パワーの概ね半分以上が、回線ドライバによって消費される。パワー増大に伴う熱の問題に加えて、隣接する電話回線からのクロストークが回線ノイズ・レベルを４０ｄＢにも高める可能性があるという、更に別の問題がある。したがって、ＤＭＴシステムのパワー消費を最適化し、隣接するツイストペアワイヤ間のクロストークを減少させることができれば有利であろう。

【０００７】

【発明の実施の形態】図１は、ＡＤＳＬシステム１０を示す。ＡＤＳＬシステム１０は、遠隔端末２０，およびツイストペア伝送媒体によって接続されている電話局(central office)３０を備える。遠隔端末２０および電話局３０は、各々、システム・コントローラ２２，３４をそれぞれ備えている。加えて、遠隔端末２０および電話局３０は、それぞれ、送受信機２４，３２を備えている。ＡＤＳＬシステム１０は、本発明を実施することができる。動作の間、電話局３０は、伝送媒体１５を通じて、下流データを遠隔端末２０に送信する。データは、遠隔端末２０の送受信機２４によって受信され、送受信機２４は受信データをシステム・コントローラ２２に供給し、更に処理を進める。同様に、上流信号も遠隔端末２０から伝送媒体１５を通じて送信され、電話局の送受信機３２によって受信され、送受信機３２はシステム・コントローラ３４にデータを供給する。

【０００８】図２は、ＡＤＳＬシステム１０内で使用するためのＳＮＲ参照表を示す。ＳＮＲ参照表は、あるビンが特定数のビットを特定のビット・エラー率（ＢＥＲ）で送信するために必要なＳＮＲである、ＳＮＲｒｅｆを示す。例えば、図２の表によれば、ＳＮＲが３０であると判定されたビンは、７ビットのデータを送信することができる。また、必要であれば、使用するエラー補正の種類に応じてＳＮＲ参照表の値を変化する。例えば、エラー訂正の使用により、図２における各ＳＮＲｒｅｆの値を３小さくすることができる。この減少により、ＳＮＲが３０のビンは８ビットを送信することが可能となる。一般に、ＳＮＲ参照表は経験的に得られるが、シミュレーションまたは理論的な結果に基づいて導出することも可能である。

【０００９】図３は、本発明を実施する方法を示す。この特定実施例は、特定のＤＭＴの実施態様を対象とするが、本発明はあらゆるＤＭＴの実施態様にも適用されることは理解されよう。ステップ３１１において、ＡＤＳＬチャネルの分析を行う。本発明の一実施例では、チャネル分析ステップ３１１は、初期状態におけるチャネルに対する信号対ノイズ比（ＳＮＲ）を返す。通常、図３のチャネル分析ステップ３１１は、初期化プロセスの一部として実行する。しかしながら、図３のステップをリアル・タイム処理の間に実行する他の実施態様も、本発明によって予見される。

【００１０】ステップ３１２において、各ビンのデータ容量を算出する。一実施例では、データ容量は、ステップ３１１において判定したキャリアのＳＮＲ，および図２のＳＮＲ参照表に基づいて算出する。データ容量は、所与のＳＮＲ参照表について、送信可能な最大ビット数を識別することによって、判定することができる。例えば、図２の表によれば、ＳＮＲが３２のビンに割り当て可能な最大ビット数は、７ビットである。

【００１１】次に、ステップ３１３において、最大容量から最少容量の順に、キャリア即ちビンをソートする。次に、ステップ３１４において、最大容量を有するキャリア（群）から始め、最少容量を有するキャリア（群）に進みつつ、送信すべきデータ・レートを割り当てる。指定したデータ・レートが得られるまで、データ容量を割り当てる。最初に最大データ・レートをこれらのビンに割り当てることにより、所望のデータ・レートでデータを送信するために使用するキャリア（使用キャリア）の数を最少に抑えることが可能となる。ステップ３１５において、未使用キャリア上のパワーを削減し、指定量の情報を送信するために用いられるパワーを最低に減らす。概して、使用中のビンのパワーの大きさの少なくとも１桁だけ、パワーを削減する。これは、各チャネルが使用中であるか否かには係らず、公称パワー量を各チャネルが維持しなければならない従来技術に対する利点である。使用していないビンに対するパワーを削減することにより、最適なパワー量の散逸が可能となる。

【００１２】図４は、本発明の異なる実施例を示す。ステップ４１１において、１セットのキャリアＮに対して、サブセット・キャリアＸを指定する。サブセットＸは、全体として、ビット・ローディング割り当てプロセスの間に好ましいキャリアまたは避けるべきキャリアを表す。次に、サブセットＸに重み付けを行う。重み付けは、明示的とすることにより、ユーザが重み値を指定することや、あるいは暗示的とすることにより、システムがサブセットＸにデフォルトの重みを有することも可能

である。例えば、サブセットＸは、暗示的に重い重み付けを行うことも可能である。重みの機能については、ステップ４１５を参照しながら論ずることにする。

【００１３】ステップ４１２において、セットＮの各キャリアについて、チャネル分析を行う。ステップ４１２のチャネル分析は、既に論じた、図３のステップ３１１のチャネル分析と同様に行う。次に、ステップ４１３において、キャリア・セットＮ内の各ビンに対するビット・ローディング容量を算出する。このステップは、図３のステップ３１２と同様である。　ステップ４１４において、セットＸの中に含まれないセットＮのキャリアを、最大ビット・ローディング容量から最少ビット・ローディング容量の順にソートし、ソートしたキャリア・サブセットを形成する。このステップは、セットのサブセットに対して行われることを除いて、図３のステップ３１３と同様である。　ステップ４１９において、セットＸ内のキャリアを、更に、最大ビット・ローディング容量から最少ビット・ローディング容量の順にソートし、別のソート・サブセットを形成する。代替実施例では、セットＸをソートしなくてもよい。

【００１４】ステップ４１５において、キャリア・サブセットＸに関連するビンを、ソートしたキャリアのセットに挿入するか、あるいはこれから除外する。一実施例では、セットＸのビンに暗示的に重い重み付けが行われている場合、そのセットは、ある予め規定された基準を満たすビンの前または後のソート・セット内に配置する。例えば、重い重み付けが行われたビンは、最大容量のビンの前に配置することができる。別の実施例では、重い重み付けが行われたビンは、１０ビットの容量を有するビンと、９ビットの容量を有するビンとの間に配置することができる。通常、重い重み付けが行われたセットには、大きなビット割り当て容量を有するビンを挿入する。１つのビンに対する最大ローディングが１５ビットである一実施例では、重い重み付けが行われたセットは、通常、７ビット割り当てレベル以上に挿入する。

【００１５】同様に、セットＸのビンに暗示的に軽い重み付けが行われている場合、これらを全体的にソート・リストから除外し、最少のビット・ローディング容量を有するビンの後に挿入するか、あるいは指定されたローディング・レベルを有するビン間に挿入することができる。通常、軽い重み付けが行われたセットには、ビット割り当て容量が小さいビンを挿入する。１つのビンに対する最大ローディングが１５ビットである一実施例では、軽い重み付けが行われたセットは、通常、７ビット割り当てレベルより下に挿入する。

【００１６】数値的な重み付けを適用する実施例では、重みの値に基づいて、セットＸのビンを正確に配置または除外する。

【００１７】ステップ４１６において、指定したデータ・レートに対応するために必要なビット数が、セットのソート順に基づいて、ビンに割り当てられる。例えば、セットＸを、ローディング容量が１３ビットのビンと１４ビットのビンとの間に挿入すると仮定する。割り当ては、セットＸ内になく、ローディング容量が１５ビットのビンから開始する。一旦最初のビンに１５ビットが割り当てられたなら、セット内になく、ローディング容量が１５ビットの別のビンに、１５ビットを割り当て、以下全ての１５ビット・ビンが完全に割り当てられるまで続ける。次に、同様に、セットＸ内にない全ての１４ビット・ビンを充填する。次に、セットＸ内にない全ての１３ビット容量のビンのローディングの前に、セットＸのビットを充填する。セットＸの各ビンを充填することに続いて、１３ビット容量のビンについて、充填プロセスを続ける。

【００１８】図５は、隣接する回線間のクロストークを減少可能な、本発明の別の実施例を示す。ステップ５０１において、キャリアのサブセットＸ１を、第１回線カードに指定する。ステップ５０２において、図４のフローをサブセットＸ１に適用する。これは、特定のデータ・レートに対応するために駆動する必要がある回線カード２のキャリア数を、事実上に最少に抑える。

【００１９】ステップ５０３において、実質的に重複していないキャリアＸ２のサブセットを、第１回線カードに指定する。一実施例では、セットＸ１，Ｘ２は、異なる周波数で動作するビンにデータ容量を割り当てようとするという点で、相互に排他的である。更に他の実施例では、セットＸ１，Ｘ２は、互いに別個の回線カード内において使用されるビンをバッファするように選択する。例えば、セットＸ１がビン１ないし１０を最初に充填すべきビンとして指定した場合、セットＸ２は、ビン１２ないし２１を最初に充填すべきビンとして示す。指定されたビンの中でビット・ローディング容量を割り当て可能である範囲において、セットＸ１，Ｘ２の周波数範囲をバッファする、未使用のビン、即ち、ビン１１がある。このバッファリングによって、クロストークに対する抵抗力(immunity)強化が可能となる。

【００２０】一旦セットＸ２を規定したなら、図４の方法を適用し、システムのパワーを最適化する。ステップ５０５において、データ送信を行うと、パワー散逸の最適化および隣接する回線間のクロストーク制限が可能となる。

【００２１】図６ないし図９は、本発明を実施する他の方法を示す。図６のステップ６０１において、ＡＤＳＬチャネルの分析を行う。一実施例では、チャネル分析は、初期状態におけるあるチャネルのＳＮＲを返す。通常、チャネル分析および図６のステップは、初期化プロセスの一部として行われる。しかしながら、図６のステップをリアル・タイムで実行する他の実施態様も、本発明によって予見される。

【００２２】チャネル分析ステップからのＳＮＲ値に基

づいて、ステップ６０２において、当該チャネルに関連するどのビンが良好なビンかについて判定を行う。良好なビンとは、最少量のデータを送信可能な、予め規定されたＳＮＲを満足するビンと定義する。例えば、表２のＳＮＲ基準（ＳＮＲｒｅｆ）値は、ビンに２ビットのデータを割り当て、かつ特定のＢＥＲを維持するためには、ビンは少なくとも１４のＳＮＲを有する必要があることを示す。ＳＮＲが１４未満のチャネルがある場合、最小数のビットを送信するものの、表のＢＥＲを維持することができないチャネルであることを示す。通常、ビンが予め規定されたＢＥＲを満たしつつ、最少量のデータを送信可能であれば、良好なビンとして定義される。

【００２３】次に、ステップ６０３において、チャネル内の劣悪なビンを全て識別する。劣悪なビンとは、予め規定された性能基準を満たすことができないビンのことである。一実施例では、特定のキャリアについて、予め規定されたＢＥＲの範囲内でデータを送信できないと判定された場合、劣悪なビンとして識別される。通常、この識別を得るには、特定のチャネルのＳＮＲを、最少値の送信量のＳＮＲｒｅｆと比較し、指定された基準が満たされるか否かについて判定を行う。例えば、ＳＮＲからＳＮＲｒｅｆを減じて－５以下となるキャリアを全て、劣悪なビンとするという基準が考えられる。したがって、図２の表を用いる場合、ＳＮＲが９以下である全てのチャネルが、劣悪なビンとして分類されることになる。通常、劣悪なビンには、データを全く割り当てることができない。

【００２４】次に、ステップ６０４において、マージナル・ビン(marginal bin)のセットを識別する。マージナル・ビンのサブセットとは、以前に良好なビンとも劣悪なビンとも判定されていないビンと定義する。前述の例では、マージナル・ビンは、９ないし１４のＳＮＲ値を有する。その理由は、ＳＮＲが１４以上のキャリアは良好なキャリアであり、ＳＮＲが９以下のキャリアは劣悪なビンとするからである。マージナル・ビンには、他の定義も同様に使用可能である。例えば、５ビットを搬送できないビンを全てマージナル・ビンとして定義したり、あるいはＳＮＲｒｅｆ値間の間隔に基づいて定義することが望ましい場合もある。

【００２５】次に、ステップ６０５において、劣悪なビンに割り当てた送信パワーを削減する。固定量だけパワーを削減したり、あるいは倍率に基づいてパワーを削減することができる。劣悪なビンの送信パワーを固定量だけ削減させる一例としては、フィルタ応答を変化させ、劣悪なビンを減衰させることであう。倍率によって劣悪なビンのパワーを削減させる一例は、その周波数領域におけるキャリアに０．１０を乗算することであろう。劣悪なビンに関連する送信パワーを削減することにより、データが送信される可能性がない場合、使用パワーが減少する。これは、全てのビン上で送信パワーを維持することを指定する、またはマージナル・ビン上では少量のデータを送信することを提案する従来技術の方法に対する利点である。

【００２６】次に、ステップ６０６において、マージナル・ビン上のパワーを増大させる。通常、劣悪なビンのパワーを削減することによって得られる量だけ、マージナル・ビンのパワーを増大させることにより、システム全体のパワーには変化を生じさせない。一実施例では、得られるパワーは、全てのマージナル・ビンに均等に与えるように使用する。他の例では、得られるパワーは、各ビンのＳＮＲに基づいて、いずれかのマージナル・ビンに割り当てることも可能である。更に別の実施例では、割り当てられるパワーに対して最大のビット容量増加を得ることができるマージナル・ビンに、得られたパワーを追加する。

【００２７】次に、ステップ６２０において、パワー・レベルが上昇した各マージナル・ビンについて、パワー増大の結果、マージナル・ビンが良好なビンとなったか否かについて判定を行う。この判定は、マージナル・ビンに対するチャネル分析によって推定または決定し、送信パワー増大後のＳＮＲ値が、データ転送に対応するのに充分か否かについて判定を行うことができる。マージナル・ビンが改善され、良好なビンと判定された場合、フローはステップ６０７に進み、新たに識別された良好なビンを、そのように識別する。マージナル・ビンのパワーが増大したものの、未だマージナルであると判定された場合、フローはステップ６０８に進む。ステップ６０８において、このビンを劣悪なビンとして識別し、フローはステップ３０５に進み、ここで新たに識別された劣悪なビンのパワーを削減する。尚、ステップ６０８において、ビンのマージナル・ステータスを維持し、更にパワーを増大し、良好なビンを作成しようとすることも可能である。しかしながら、マージナル・ビンの少なくともいくつかを劣悪なビンとして識別し、割り当てのために余分なパワーを解放してマージナル・ビンのＳＮＲを改善するために使用し、ステップ６０８において劣悪なビンとして識別しないようにする必要がある。次に、ステップ６０９において、良好なビンとして定義された全てのビン上で、データを送信する。

【００２８】図６のフローは、劣悪なビンに一定のパワー・レベルを維持しないことにより、従来技術の提案に対する改善を与えるものである。加えて、従来技術は、データ・レート上の処理能力を改善するために、よいビンにもマージナル・ビンにも大幅なパワーの増大を許さない。本発明は、パワーの増大を行わなければ、少なくともいくつかのビンにおいて有用なデータを送信および受信できないという点まで信号強度が減衰する場合に、データ・レートを最大に高めることを可能とする。

【００２９】図７は、本発明による別の方法を示す。ステップ７０１ないし７０４は、図６のステップ６０１な

いし６０４と同様であり、これ以上論じないことにする。次に、ステップ７０６において、マージナル・ビンおよび良好なビンのパワーを増大する。この実施例では、マージナル・ビンのパワーだけを増大するのではない。これによって、良好なビンおよびマージナル・ビンに同様にビット割り当ての増加が可能となる。ステップ７２０，７０７，７０８，７０９は、図６のステップ６２０，６０７，６０８，６０９と同様であり、ここではこれ以上論じないことにする。

【００３０】図８は、本発明による別の方法を示す。ステップ８０１ないし８０４は、図６のステップ６０１ないし６０４と同様であり、これ以上論じないことにする。次に、ステップ８０５において、マージナル・ビンおよび劣悪なビンのパワーを削減する。次に、ステップ８０６において、良好なビンのパワーのみを増大する。この実施例では、劣悪なビンおよびマージナル・ビンからの使用可能なパワー全てを、良好なビンに割り当てし直す。これによって、良好なビンに割り当てるビットを増加させることができる。通常、特定のＢＥＲにおける各ビンの最大データ容量を送信するために必要な量を超えてパワーを増大させることはない。

【００３１】本発明を用いたビット・レートの上昇を図９に示す。図９は、使用されていないキャリアに付随するパワーを割り当てし直した場合に、本発明者によって観察されたビット・レート利得を示す。２５０個のキャリア全てを使用する場合、割り当てし直すパワーはなく、したがって、全体的なデータ・レートの上昇もないことに気が付かれよう。しかしながら、検査したシステムにおいて１００個のキャリアのみを用い、１５０個の使用されていないキャリアからのパワーを使用中のビンに割り当てし直した場合、毎秒約５５０キロビットのビット・レート上昇が実現した。したがって、ＡＤＳＬシステムに関連するパワーを割り当てし直すことによって、従来技術の標準に対し、性能の向上が得られること認められよう。本発明を用いると、パワーをビンに割り当てし直すことにより、ビンは追加の距離まで信号を搬送することができるため、信号を送信可能な距離が延長することになる。これは、かかるパワー再割り当てを考慮しない従来技術に対する利点の１つである。

【００３２】前述の説明は、ＡＤＳＬシステムのパワー消費を改善するために好適な方法を明らかにした。本発明について、具体的な実施例を参照しながら説明した。しかしながら、請求項に明記されている本発明の範囲から逸脱することなく、種々の改良や変更も本発明には可能であることを、当業者は認めよう。例えば、前述の具体的な実施例は、図２のＳＮＲｒｅｆ表を用いて、ビンのローディングを判定することについて論じた。ビンのローディングを判定する他の方法も使用可能であることは、当業者であれば認めるであろう。本発明によって予見される改良の一例は、ビンの多数のサブセットを識別し、重み付けすることであろう。本発明は、他のビン分類方法を用いる場合にも等しく適用可能であることを当業者は認めよう。更に他の改良例としては、使用されていないビンのいくつかまたは全てのパワーを周期的に送信し、ビンのＳＮＲを監視することがあげられる。特許請求の範囲においては、ミーンズ・プラス・ファンクション（means-plus-function）項目（群）がある場合は、いずれも、ここに記載した構造で、列挙した機能（群）を行うものを含むこととする。また、ミーンズ・プラス・ファンクション項目（群）は、列挙した機能（群）を行う構造的同等物および同等の構造も含むこととする。

【図面の簡単な説明】

【図１】ＡＤＳＬシステムを示すブロック図。

【図２】ＳＮＲ参照表を示す図。

【図３】本発明を実施する具体的な方法を示すフロー・チャート。

【図４】本発明を実施する具体的な方法を示すフロー・チャート。

【図５】本発明を実施する具体的な方法を示すフロー・チャート。

【図６】本発明を実施する具体的な方法を示すフロー・チャート。

【図７】本発明を実施する具体的な方法を示すフロー・チャート。

【図８】本発明を実施する具体的な方法を示すフロー・チャート。

【図９】ビット・レートの上昇対使用キャリア数の関係を示すグラフ。

【符号の説明】

１０　　ＡＤＳＬシステム
１５　　伝送媒体
２０　　遠隔端末
２２，３４　　システム・コントローラ
２４，３２　　送受信機
３０　　電話局

【図１】

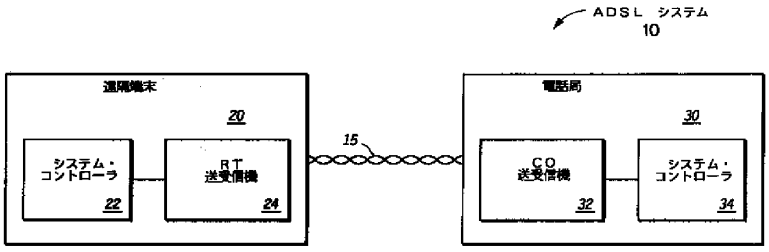

【図２】

SNR表	
ビット	SNR_{REF}
2	14
3	19
4	21
5	24
6	27
7	30
8	33
9	36
10	39
11	42
12	45
13	48
14	51
15	54

【図３】

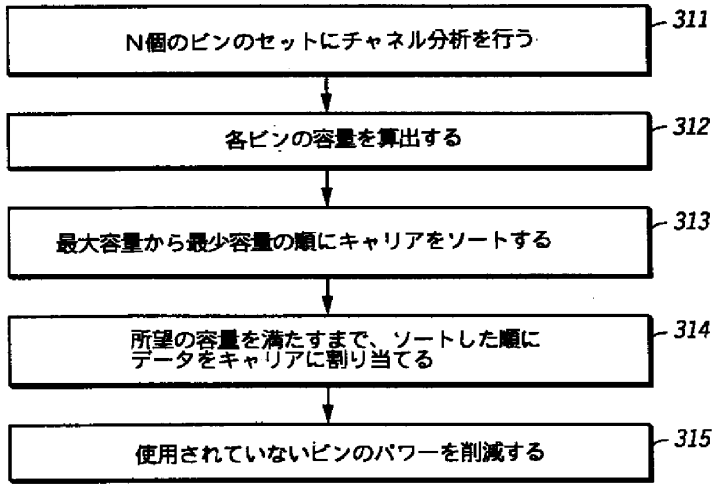

【図９】

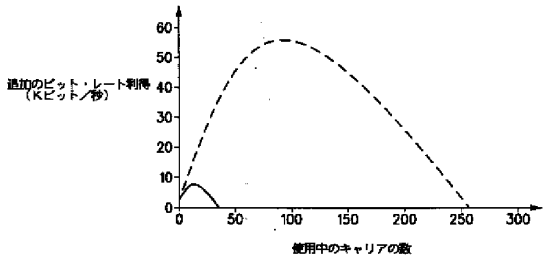

【図４】

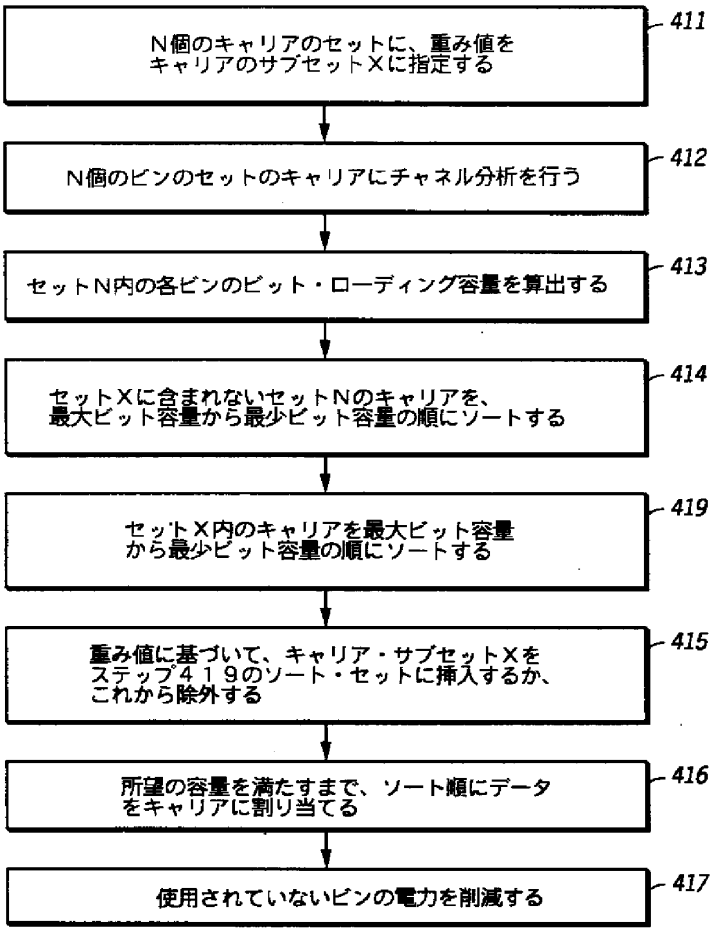
Ｎ個のキャリアのセットに、重み値を
キャリアのサブセットＸに指定する
411
Ｎ個のビンのセットのキャリアにチャネル分析を行う
412
セットＮ内の各ビンのビット・ローディング容量を算出する
413
セットＸに含まれないセットＮのキャリアを、
最大ビット容量から最少ビット容量の順にソートする
414
セットＸ内のキャリアを最大ビット容量
から最少ビット容量の順にソートする
419
重み値に基づいて、キャリア・サブセットＸを
ステップ４１９のソート・セットに挿入するか、
これから除外する
415
所望の容量を満たすまで、ソート順にデータ
をキャリアに割り当てる
416
使用されていないビンの電力を削減する
417

【図５】

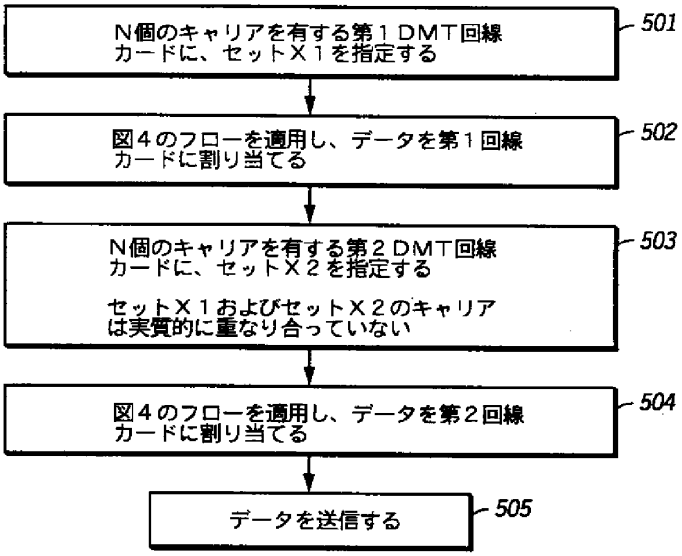
N個のキャリアを有する第１DMT回線カードに、セットX１を指定する
501
図４のフローを適用し、データを第１回線カードに割り当てる
502
N個のキャリアを有する第２DMT回線カードに、セットX２を指定する
セットX１およびセットX２のキャリアは実質的に重なり合っていない
503
図４のフローを適用し、データを第２回線カードに割り当てる
504
データを送信する
505

【図８】

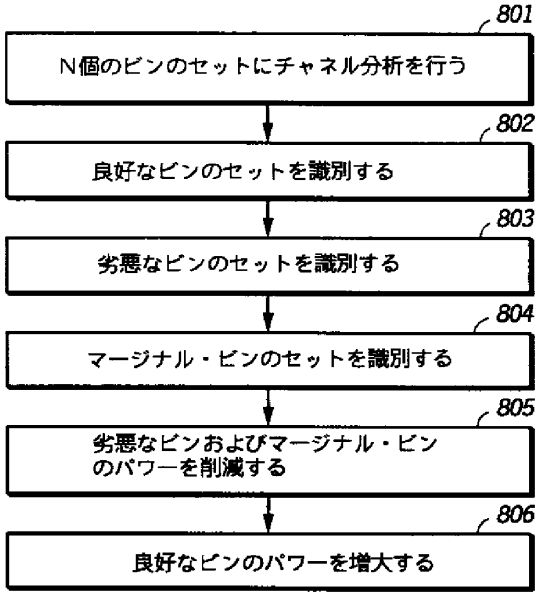
801
N個のビンのセットにチャネル分析を行う
802
良好なビンのセットを識別する
803
劣悪なビンのセットを識別する
804
マージナル・ビンのセットを識別する
805
劣悪なビンおよびマージナル・ビンのパワーを削減する
806
良好なビンのパワーを増大する

【図６】

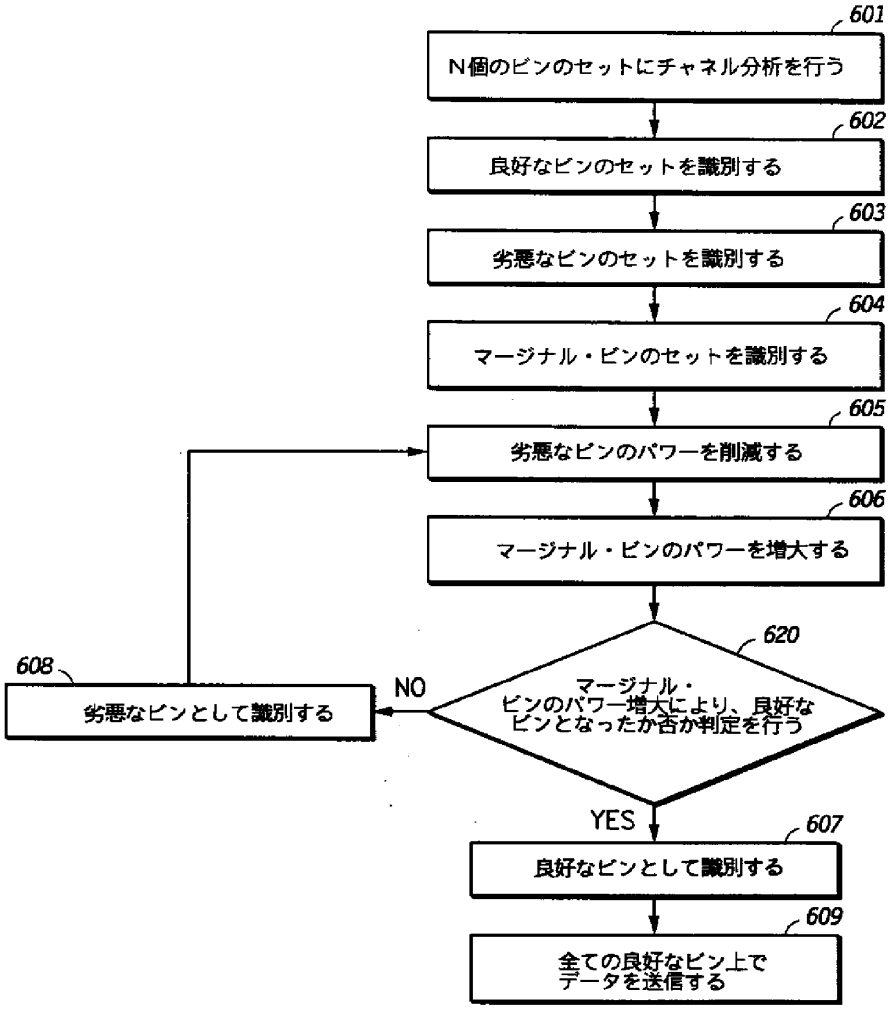
601
N個のビンのセットにチャネル分析を行う
602
良好なビンのセットを識別する
603
劣悪なビンのセットを識別する
604
マージナル・ビンのセットを識別する
605
劣悪なビンのパワーを削減する
606
マージナル・ビンのパワーを増大する
620
マージナル・
ビンのパワー増大により、良好な
ビンとなったか否か判定を行う
NO
608
劣悪なビンとして識別する
YES
607
良好なビンとして識別する
609
全ての良好なビン上で
データを送信する

【図７】

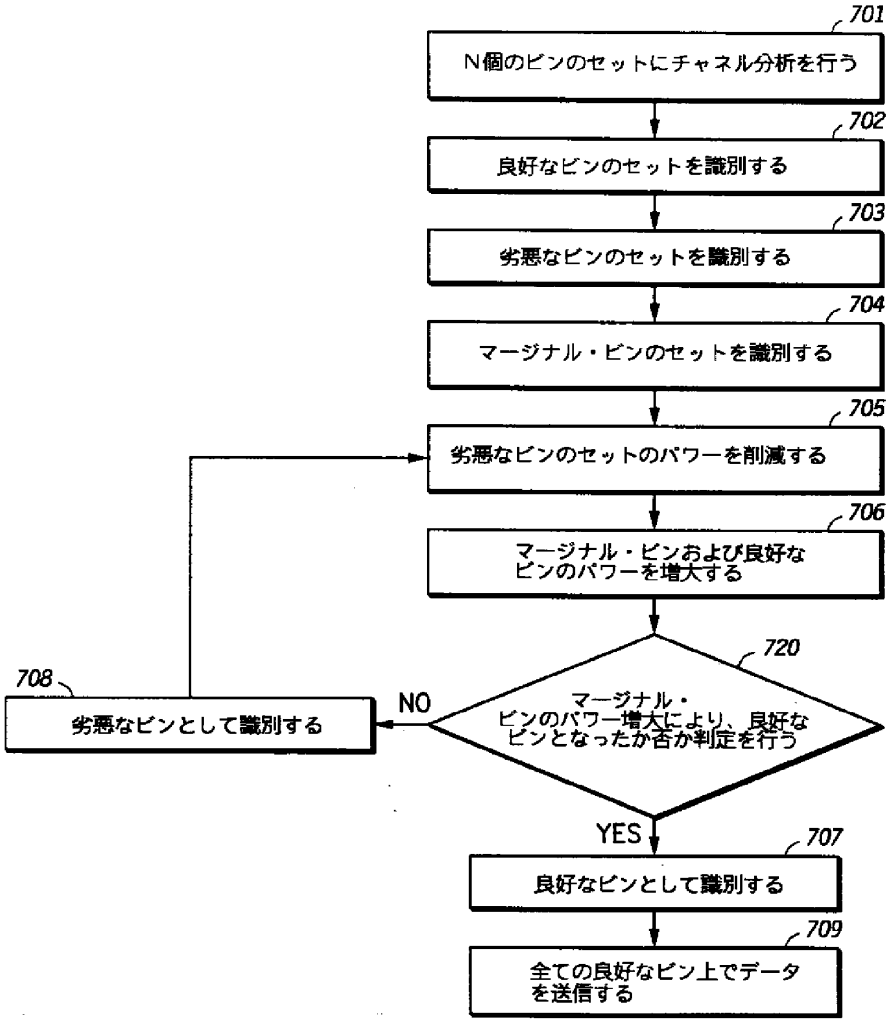

フロントページの続き

(72)発明者　マシュー・エー・ペンドルトン
アメリカ合衆国テキサス州シダー・パーク、ベイベリー・コート503

(72)発明者　テレンス・ジョンソン
アメリカ合衆国テキサス州オースチン、チャカー・サークル10100

ADAPTIVE CHANNEL ALLOCATION IN A FREQUENCY DIVISION MULTIPLEXED SYSTEM

Publication number: JP11508417 (T)
Publication date: 1999-07-21
Inventor(s):
Applicant(s):
Classification:
- international: ***H04J11/00; H04L5/02; H04L27/26; H04W16/10;*** **H04J11/00; H04L5/02; H04L27/26; H04W16/00;** (IPC1-7): H04Q7/36; H04J11/00
- European: H04W16/10; H04L5/00A2A1; H04L5/00C1; H04L5/00C4A; H04Q7/38C4
Application number: JP19960503792T 19960620
Priority number(s): WO1996SE00814 19960620; US19950493489 19950622

Also published as:
WO9701256 (A1)
US5726978 (A)
JP3850878 (B2)
FI974555 (A)
EP0882377 (A1)
more >>

Abstract not available for JP 11508417 (T)
Abstract of corresponding document: **WO 9701256 (A1)**

A method and system of adaptive channel allocation in a frequency division multiplexed system is provided. In the method and system, a subset of M subcarriers is chosen from a larger set of N subcarriers available for communications on a link. As communications take place on the link, signal quality (C/I) measurements (342) on the subcarriers of the subset of M subcarriers and interference (I) measurements (344) on the subcarriers of the group of N subcarriers are periodically performed. The C/I and I measurements are then used to reconfigure (422) the subset of M subcarriers to reduce co-channel interference on the link.

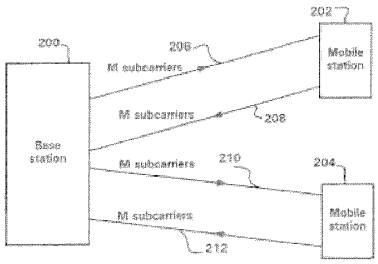

Data supplied from the ***espacenet*** database — Worldwide

(19)日本国特許庁（ＪＰ）　(12) **公表特許公報**（Ａ）　(11)特許出願公表番号

特表平11－508417

(43)公表日　平成11年(1999)７月21日

(51)Int.Cl.[6]	識別記号	ＦＩ	
Ｈ０４Ｑ　7/36		Ｈ０４Ｂ　7/26	１０５Ｄ
Ｈ０４Ｊ　11/00		Ｈ０４Ｊ　11/00	Ｚ

審査請求　未請求　予備審査請求　有　（全 46 頁）

(21)出願番号　特願平9－503792
(86)（22)出願日　平成８年(1996)６月20日
(85)翻訳文提出日　平成９年(1997)12月19日
(86)国際出願番号　ＰＣＴ／ＳＥ９６／００８１４
(87)国際公開番号　ＷＯ９７／０１２５６
(87)国際公開日　平成９年(1997)１月９日
(31)優先権主張番号　０８／４９３，４８９
(32)優先日　1995年６月22日
(33)優先権主張国　米国（ＵＳ）

(71)出願人　テレフオンアクチーボラゲツト　エル　エム　エリクソン（パブル）
スウェーデン国　エス－126　25　ストツクホルム（番地なし）
(72)発明者　フロディッヒ，カール　マグヌス
スウェーデン国　エス－164　43　キスタ，ランゲランドスガタン　43，１トル
(72)発明者　グドムンドソン，ペロルス　レイフ　ミカエル
スウェーデン国　エス－164　46　キスタ，コルディングガタン　４，２トル
(74)代理人　弁理士　浅村　皓　（外３名）

最終頁に続く

(54)【発明の名称】　周波数分割多重システムにおけるアダプティブチャネル割当て

(57)【要約】
周波数分割多重システムにおけるアダプティブチャネル割当て方法およびシステムが提供される。本方法およびシステムでは、リンクの通信に利用可能なN副搬送波の大きなセットからM副搬送波のサブセットが選択される。リンクで通信が行われると、M副搬送波のサブセットの副搬送波の信号品質（Ｃ／Ｉ）（３４２）測定およびN副搬送波群の副搬送波の干渉（Ｉ）測定（３４４）が周期的に実行される。次に、Ｃ／ＩおよびＩ測定値を使用してM副搬送波のサブセットが再構成（４２２）されリンクの同一チャネル干渉が低減される。

FIG. 2

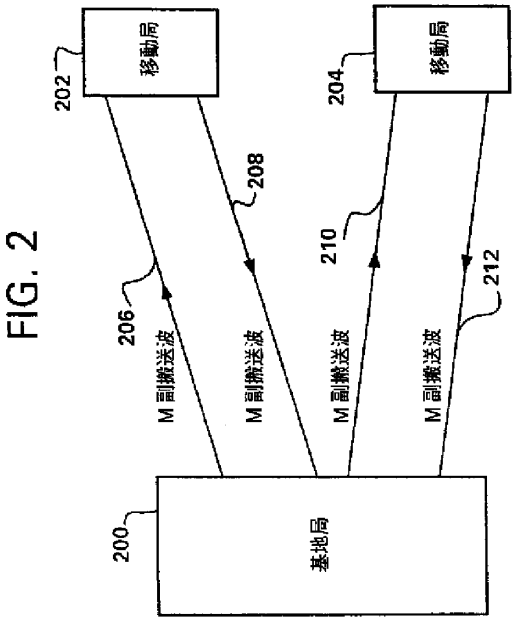

【特許請求の範囲】

１．リンク送信機からリンク受信機への通信がリンクが利用可能な複数の副搬送波のセットのサブセットを介して送信される電気通信システムにおいて、リンクを介した通信の副搬送波割当て方法であって、該方法は、

前記セットから複数の副搬送波を割り当てて前記サブセットを与えるステップと、

前記セットの各副搬送波で受信する信号を測定するステップと、

前記リンクで使用するのに前記サブセットの副搬送波よりも好ましい少なくとも１つの未使用副搬送波が前記セット内に存在するかどうかを確認するステップと、

肯定的確認に応答して前記サブセットを再構成するステップと、

を含む、副搬送波割当て方法。

２．請求項１記載の方法であって、前記割当てステップは、

前記セットの各副搬送波の干渉レベル（Ｉ）を測定するステップと、

前記セットの複数の最低干渉未使用副搬送波を含む前記サブセットを決定するステップと、

を含む、方法。

３．請求項２記載の方法であって、干渉レベル（Ｉ）を測定する前記ステップは、さらに、

前記干渉レベル（Ｉ）測定の複数の結果を前記リンク受信機から前記システムへ送信するステップを含み、送信される前記複数の結果の数は前記セット内の副搬送波数よりも少ない方法。

４．請求項１記載の方法であって、前記測定ステップは、

前記セットの各副搬送波の干渉レベル（Ｉ）を測定するステップを含む方法。

５．請求項１記載の方法であって、前記測定ステップは、

前記サブセットの各副搬送波の信号品質（Ｃ／Ｉ）を測定するステップを含む方法。

６．請求項１記載の方法であって、前記測定ステップは、

前記セットの各副搬送波の干渉レベル（Ｉ）を測定するステップと、

前記サブセットの各副搬送波の信号品質レベル（Ｃ／Ｉ）を測定するステップと、を含み、

前記確認するステップは、

最低信号品質レベル（Ｃ／Ｉ）を有する前記サブセットの副搬送波を決定するステップと、

前記最低信号品質レベル（Ｃ／Ｉ）を有する前記サブセットの前記副搬送波の干渉レベル（Ｉ）よりも低い干渉レベル（Ｉ）を有する前記セットの未使用副搬送波が存在するかどうかを確認するステップと、を含む方法。

７．請求項６記載の方法であって、前記再構成ステップは、

肯定的確認に応答して前記最低信号品質（Ｃ／Ｉ）を有する前記副搬送波を前記サブセットから除去するステップと、

前記未使用副搬送波を前記サブセットへ挿入するステップと、を含む方法。

８．請求項６記載の方法であって、干渉レベル（Ｉ）を測定する前記ステップは、さらに、

前記干渉レベル（Ｉ）測定の複数の結果を前記リンク受信機から前記システムへ送信するステップを含み、送信される前記結果の数は前記セット内の副搬送波数よりも少なく、

信号品質（Ｃ／Ｉ）を測定する前記ステップは、さらに、

前記信号品質（Ｃ／Ｉ）測定の複数の結果を前記リンク受信機から前記システムへ送信するステップを含み、送信される前記結果の数は前記サブセット内の副搬送波数よりも少ない方法。

９．請求項１記載の方法であって、前記割当てステップは、

前記セットの各副搬送波の干渉レベル（Ｉ）を測定するステップと、

前記セットの複数の最低干渉副搬送波を含む候補サブセットを決定するステップと、

サブセット要求メッセージを前記リンク受信機から前記システムへ送信するステップと、

前記システムからの返答メッセージを前記リンク受信機において受信するステ

ップと、

前記候補サブセットが前記リンクに対して受諾されるかどうかを前記返答メッセージから確認するステップと、

を含む、方法。

１０．請求項９記載の方法であって、返答メッセージを受信する前記ステップは、サブセット受諾メッセージを受信するステップを含む、方法。

１１．請求項９記載の方法であって、返答メッセージを受信する前記ステップは、１つ以上の副搬送波拒絶メッセージを含み、前記候補サブセットが受諾されるかどうかを確認する前記ステップは、さらに、

前記サブセットに対する１つ以上の次の候補副搬送波を決定するステップと、

１つ以上の副搬送波要求メッセージを前記リンク受信機から前記システムへ送信するステップと、

完全なサブセットが受諾されるまで、１つ以上の次の候補副搬送波を決定する前記ステップおよび１つ以上の副搬送波要求メッセージを前記システムへ送信するステップを繰り返すステップと、

を含む、方法。

１２．請求項１記載の方法であって、未使用副搬送波が存在するかどうかを確認する前記ステップは、

前記リンクで使用するのに、前記サブセットの副搬送波よりも好ましい前記セットの候補副搬送波が存在するかどうかを確認するステップと、

副搬送波要求メッセージを前記リンク受信機から前記システムへ送信するステップと、

前記システムからの返答を前記リンク受信機において受信するステップと、

前記候補副搬送波が未使用であるかどうかを前記返答から確認するステップと、

前記返答結果から確認を行う前記ステップにおいて肯定的確認がなされるまで、否定的確認に応答して、より好ましい前記セットの副搬送波が存在するかどうかを確認し、副搬送波要求を送信し、返答を受信し、前記返答から確認を行うステップを、毎回異なる候補副搬送波により繰り返すステップと、

を含む、方法。

１３．請求項１２記載の方法であって、前記サブセットの各副搬送波で受信する信号を測定する前記ステップは、

前記セットの各副搬送波の干渉レベル（Ｉ）を測定するステップと、

前記サブセットの各副搬送波の信号品質レベル（Ｃ／Ｉ）を測定するステップと、

を含み、

前記リンクで使用するのに、前記サブセットの副搬送波よりも好ましい候補副搬送波が前記セット内に存在するかどうかを確認する前記ステップは、

最低信号品質（Ｃ／Ｉ）を有する前記サブセットの副搬送波を決定するステップと、

前記最低信号品質（Ｃ／Ｉ）を有する前記サブセットの前記副搬送波の干渉レベル（Ｉ）よりも低い干渉レベル（Ｉ）を有する前記セットの候補副搬送波を決定するステップと、

を含む、方法。

１４．リンク送信機からリンク受信機への通信がリンクが利用可能な複数の副搬送波のセットのサブセットを介して送信される電気通信メットワークにおける、リンクを介した通信の副搬送波割当てシステムであって、該システムは、

前記セットから複数の副搬送波を割り当てて前記サブセットを与える手段と、

前記サブセットの各副搬送波で受信する信号を測定する手段と、

前記リンクで使用するのに、前記サブセットの副搬送波よりも好ましい少なくとも１つの未使用副搬送波が前記セット内に存在するかどうかを確認する手段と、

肯定的確認に応答して前記サブセットを再構成する手段と、

を含む、副搬送波割当てシステム。

１５．請求項１４記載の方法であって、前記割当て手段は、

前記セットの各副搬送波の干渉レベル（Ｉ）を測定する手段と、

前記セットの複数の最低干渉副搬送波を含む前記サブセットを決定するステッ

プと、

を含むシステム。

１６．請求項１５記載のシステムであって、干渉レベル（Ｉ）を測定する前記手段は、さらに、

前記干渉レベル（Ｉ）測定の複数の結果を前記リンク受信機から前記システムへ送信する手段を含み、送信される前記複数の結果の数は前記セット内の副搬送波数よりも少ないシステム。

１７．請求項１４記載のシステムであって、前記測定手段は、

前記セットの各副搬送波の干渉レベル（Ｉ）を測定する手段を含むシステム。

１８．請求項１４記載のシステムであって、前記測定手段は、

前記サブセットの各副搬送波の信号品質（Ｃ／Ｉ）を測定する手段を含むシステム。

１９．請求項１４記載のシステムであって、前記測定手段は、

前記セットの各副搬送波の干渉レベル（Ｉ）を測定する手段と、

前記サブセットの各副搬送波の信号品質レベル（Ｃ／Ｉ）を測定する手段と、

を含み、

前記確認する手段は、

最低信号品質レベル（Ｃ／Ｉ）を有する前記サブセットの副搬送波を決定する手段と、

前記最低信号品質レベル（Ｃ／Ｉ）を有する前記サブセットの前記副搬送波の干渉レベル（Ｉ）よりも低い干渉レベル（Ｉ）を有する前記セットの未使用副搬送波が存在するかどうかを確認する手段と、

を含む方法。

２０．請求項１９記載のシステムであって、前記再構成手段は、

肯定的確認に応答して前記最低信号品質（Ｃ／Ｉ）を有する前記副搬送波を前記サブセットから除去する手段と、

前記未使用副搬送波を前記サブセットへ挿入する手段と、

を含むシステム。

２１．請求項１９記載のシステムであって、干渉レベル（Ｉ）を測定する前記手段は、さらに、

前記干渉レベル（Ｉ）測定の複数の結果を前記リンク受信機から前記システムへ送信する手段を含み、送信される前記結果の数は前記セット内の副搬送波数よりも少なく、

信号品質（Ｃ／Ｉ）を測定する前記手段は、さらに、

前記信号品質（Ｃ／Ｉ）測定の複数の結果を前記リンク受信機から前記システムへ送信する手段を含み、送信される前記結果の数は前記サブセット内の副搬送波数よりも少ないシステム。

２２．請求項１４記載の方法であって、前記割当て手段は、

前記セット各副搬送波の干渉レベル（Ｉ）を測定する手段と、

前記セットの複数の最低干渉副搬送波を含む候補サブセットを決定する手段と、

サブセット要求メッセージを前記リンク受信機から前記システムへ送信する手段と、

前記システムからの返答メッセージを前記リンク受信機において受信する手段と、

前記候補サブセットが前記リンクに対して受諾されるかどうかを前記返答メッセージから確認する手段と、

を含む、方法。

２３．請求項２２記載のシステムであって、返答メッセージを受信する前記手段は、サブセット受諾メッセージを受信する手段を含む、システム。

２４．請求項２２記載のシステムであって、返答メッセージを受信する手段は、１つ以上の副搬送波拒絶メッセージを受信する手段を含み、前記候補サブセットが受諾されるかどうかを確認する前記手段は、

前記サブセットに対する１つ以上の次の候補副搬送波を決定する手段と、

１つ以上の副搬送波要求メッセージを前記リンク受信機から前記システムへ送信する手段と、

完全なサブセットが受諾されるまで、１つ以上の次の候補副搬送波を決定する前記ステップおよび１つ以上の副搬送波要求メッセージを前記システムへ送信するステップを繰り返す手段と、

を含む、システム。

２５．請求項１４記載の方法であって、未使用副搬送波が存在するかどうかを確認する前記手段は、

前記リンクで使用するのに、前記サブセットの副搬送波よりも好ましい前記セットの候補副搬送波が存在するかどうかを確認する手段と、

副搬送波要求メッセージを前記リンク受信機から前記システムへ送信する手段と、

前記システムからの返答を前記リンク受信機において受信する手段と、

前記候補副搬送波が未使用であるかどうかを前記返答から確認する手段と、

を含む、方法。

２６．請求項２５記載の方法であって、前記サブセットの各副搬送波で受信する信号を測定する前記手段は、

前記セットの各副搬送波の干渉レベル（Ｉ）を測定する手段と、

前記サブセットの各副搬送波の信号品質レベル（Ｃ／Ｉ）を測定する手段と、

を含み、

前記リンクで使用するのに、前記サブセットの副搬送波よりも好ましい候補副搬送波が前記セット内に存在するかどうかを確認する前記手段は、

最低信号品質（Ｃ／Ｉ）を有する前記サブセットの副搬送波を決定する手段と、

前記最低信号品質（Ｃ／Ｉ）を有する前記サブセットの前記副搬送波の干渉レベル（Ｉ）よりも低い干渉レベル（Ｉ）を有する前記セットの候補副搬送波を決定する手段と、

を含む、方法。

【発明の詳細な説明】

周波数分割多重システムにおけるアダプティブチャネル割当て

発明の背景

発明の分野

本発明はセルラー電気通信システムに関し、特に、周波数分割多重システムにおけるアダプティブチャネル割当てに関する。

従来技術の説明

セルラー電気通信システムでは、移動局のユーザはシステムの地理的カバレッジエリアの周りを移動しながら無線インターフェイスを介してシステムと通信する。移動局とシステム間の無線インターフェイスは、各々がシステム内で作動する移動局と無線通信することができる、システムのカバレッジエリアにわたって分散された基地局を設けることにより実施される。典型的なセルラー電気通信システムでは、システムの各基地局はセルと呼ばれるある地理的カバレッジエリア内の通信を制御し、特定のセル内に位置する移動局はそのセルを制御する基地局と通信する。移動局がシステム中を移動すると、システムと移動局間の通信の制御はシステム全体の移動局の移動に従ってセルからセルへ転送される。既存のセルラー電気通信システムは、特定のシステムで作動するようにされた装置のコンパチビリティを保証するさまざまなエアインターフェイス標準(air interface standards)に従って作動する。各標準は全ての動作モードでシステムの移動局と基地局間で行われるプロセスの特定の詳細を提供し、それにはアイドル中、制御チャネル再走査中、登録中、および音声もしくはトラフィックチネルへ接続中が含まれる。最近のセルラーシステム技術の発展は急速である。これらの技術的発展はセルラーシステムにより提供される次第に複雑化するサービスに対する需要の増大により推進されている。セルラーシステム技術およびセルラーシステムの総数が世界中でこの需要を満たすように増加しているため、それらのシステムを作動させるためのシステム標準数もそれに伴って増加している。

大概の無線システムと同様に、セルラー電気通信システムでは使用できる周波数帯域は限定された資源である。そのため、新しいセルラーシステムを開発する

時は、利用可能な周波数帯域を最も効率的に使用できるようにすることに強調点が集中される場合が多い。さらに、セルラーシステム内での通信はマルチパス伝搬や同一チネル干渉等のある種のＲＦ信号歪を受ける場合が多い。また、新しいシステム標準の開発ではシステムのセル内の通信に及ぼすこれらのＲＦ信号歪の影響を最小限に抑えることも強調される。

周波数分割多重化（ＦＤＭ）はセルラーシステムに応用されるデータ通信方法である。直交周波数分割多重化（ＯＦＤＭ）はセルラーシステムに特に適したＦＤＭの特別な方法である。ＯＦＤＭ信号は多重化されたいくつかの副搬送波により構成され、各副搬送波は異なる周波数で連続的ではなく離散的に変動する信号により変調される。変調信号のレベルが個別に変動するため、各副搬送波のパワースペクトルは（ｓｉｎｘ／ｘ）^{2}分布に従う。各副搬送波により伝送されるスペクトル形状は、個別の副搬送波のスペクトルが他の副搬送波周波数においてゼロであり副搬送波間に干渉は生じないようにされている。一般的に、Ｎシリアルデータエレメントは副搬送波周波数を変調し、それは次に周波数分割多重化される。Ｎシリアルデータエレメントの各々がＴ＝１／ｆｓの持続時間のデータブロックを含み、ｆｓはＯＦＤＭ信号の帯域幅である。ＯＦＤＭシステムの副搬送波は１／Ｔの倍数により周波数が分離される。副搬送波の周波数スペクトルは重畳するが、この周波数間隔により副搬送波は１シンボル期間にわたって直交とされ、変調された各搬送波のパワーのピークは他の搬送波のパワースペクトルのゼロに対応する周波数で生じるようにされる。ＯＦＤＭ信号の全体スペクトルは、ＯＦＤＭ信号に多数のＯＦＤＭ搬送波が含まれる場合には、矩形に近い。

期間Ｔ中に、ＯＦＤＭ信号はＮサンプルのブロックで表すことができる。Ｎサンプルの値は次式で表される。

$$x(n) = \sum_{k=0}^{N-1} X(k)\, e^{2jnk/N}$$

Ｎ値Ｘ（ｋ）はＯＦＤＭ搬送波$e^{2jnK/N}$を変調する離散変動信号の期間Ｔ中のデータを表す。前記したことから、ＯＦＤＭ信号はデータサンプルＸ（ｋ）のセットの離散逆フーリエ変換に対応する。データストリームをＯＦＤＭ信号へ変換

するために、データストリームはＮサンプルＸ（ｋ）のブロックへ分割され、各ブロックに離散逆フーリエ変換が実行される。時間をかけて特定のサンプル位置に現れるブロックのストリングは、周波数ｆｎである副搬送波を変調する離散変動信号を構成する。

ＯＦＤＭによりセルラーシステムにおいて望ましいいくつかの利点が提供される。ＯＦＤＭでは、周波数スペクトルにおける副搬送波の直交性によりＯＦＤＭ信号の全体スペクトルは矩形に近くすることができる。その結果、システムに利用可能な帯域幅が効率的に使用される。ＯＦＤＭはマルチパス伝搬効果による干渉が低減される利点も提供する。マルチパス伝搬効果は無線波のパスにある建物や他の構造から散乱する無線波により生じる。マルチパス伝搬により周波数選択マルチパスフェージングが生じる。あるＯＦＤＭシステムでは、個別の各データエレメントのスペクトルは、通常利用可能な帯域幅の小部分しか占有しない。それにはマルチパスフェージングを多くのシンボルにわたって拡散するという影響がある。それにより周波数選択マルチパスフェージングによるバーストエラーが有効にランダム化され、１つもしくはいくつかのシンボルが完全に破壊されるのではなく、多くのシンボルが僅かに歪むようにされる。さらに、ＯＦＤＭにより、期間Ｔは伝送チネルのシンボル遅延時間に較べて比較的大きく選択できるという利点が提供される。それはさまざまなシンボルの一部を同時に受信することにより生じるシンボル間干渉を低減する効果がある。

セルラーシステムにＯＦＤＭを使用することはシミニの論文“Analysis and Simulation of a Digital Mobile Channel Using Orthogonal Frequency Division Multiplexing”IEEE Trans.Commun,,Vol.33,No.7,pp 665-675（１９８５年７月）に提案されている。ＯＦＤＭのモバイルシステムへの同様な応用は、キャサの論文“OFDM for Data Communication Over Mobile Radio FM-Channels-Part I：Analysis and Experimental Results”,IEEE Trans.Commun.Vol.39,No.5,pp.783-793（１９９１年５月）でも提案されている。これらのＯＦＤＭセルラーシステムでは、セル内で作動している基地局から移動局（下り）および移動局から基地局（上り）への伝送のために作り出される各通信リンクに１組の副搬送波周波数が割り当てられる。各通信リンクに割り当てられる副搬送波セットはシス

テムに利用可能な全副搬送波周波数から選択される。セル内では、２つ以上の通信リンクに同じ副搬送波周波数を割り当てることはできない。したがって、同じセル内の副搬送波間で同一チャネル干渉は生じない。しかしながら、このようなＯＦＤＭシステムでは、システムのセル内の通信リンクに、システム内の他のセル内に設定された通信リンクにも割り当てられる１つ以上の副搬送波を含む１組の副搬送波が割り当てられることがある。このような共通に割当てられる各副搬送波周波数は、同じ副搬送波周波数を他のセルで使用することにより生じる同一チャネル干渉を受けることがある。これらのＯＦＤＭシステムには、異なるセル内に作り出される通信リンクへの副搬送波周波数の割当てを調整する方法およびシステムは何も存在しない。このようなシステムでは、近隣セルで使用する副搬送波により生じる通信リンク内の同一チャネル干渉は非常に大きくなることがある。

非ＯＦＤＭシステム内のセル間でチャネル周波数を割り当てる方法が開発され、それにより同一チャネル干渉は低減されたり最小限に抑えられている。アダプティブチャネル割当て（ＡＣＡ）はそのような方法である。ＡＣＡでは、セルラーシステムに割り当てられた任意のチャネル周波数を使用して、ある干渉基準が満たされる限りシステム内のどこかでその周波数が使用されるかどうかに無関係に、システムの任意のセル内でリンクを設定することができる。また、干渉基準が満たされる限り、チャネル周波数はシステム全体を通して自由に再利用することができる。

アダプティブチャネル割当てでは、ダイナミックに割り当てられたチャネル周波数による信号品質および干渉レベルのさまざまな測定はセルのカバレッジエリア内で実行されて、セル内に作り出される通信リンクへ割り当てられるトラフィックもしくは音声チャネルのリストが作られる。セルを制御する基地局およびセルのカバレッジエリア内の移動局は、システム内の通信にダイナミックに割り当てられるようにシステムオペレータが割り当てているチャネル周波数セットにより測定を実行する。一般的には、上りおよび下りの両方の測定が行われる。これらの測定に基づいて、新しいリンクを作り出す時は、あるルールに基づいてリンクにチャネル周波数が割り当てられる。例えば、最小干渉ＡＣＡでは、システム

は各セル内で測定される最小干渉（最大品質）チャネルから最大干渉（最低品質）チャネルまでのチャネルのテーブルを作る。次に、システムはそのリストからある数の最小干渉チャネル周波数を選択してそのセル内での通信へ割り当てる。選択されるチャネル間の所要の周波数分離およびその周波数により相互変調を生じるようなチャネルの組合せを回避する等の、他の基準も配慮される。ＡＣＡの例として、エッチ．エリクソンの論文“Capacity Improvement by Adaptive Channel Allocation”,IEEE Global Telecomm. Conf., pp.1355-1359,１９８８年１１月２８日－１２月１日には、全チャネルが全ての基地局により共有される共通資源であるセルラー無線システムに関連する容量利得が例示されている。前記した報告書では、移動機は下りの信号品質を測定し、チャネルは最高搬送波対干渉比（Ｃ／Ｉレベル）を有するチャネルの選択に基づいて割り当てられる。　各リンクに対して１つの搬送波周波数を使用する非ＯＦＤＭセルラーシステムのために作られている既存のＡＣＡアルゴリズムは、ＯＦＤＭを使用するセルラーシステムでは有効に使用できない。既存のＡＣＡ技術の１つの問題点は、ＯＦＤＭシステムにおける副搬送波の数が各通信リンクに対して１つの搬送波を使用するシステムの搬送波の数に較べて大きいことである。それはＡＣＡに必要な上りおよび下り測定結果を得るのに時間およびシステム資源の両方を費やす広範な測定努力を必要とする。さらに、移動局で行った多数の下り測定の結果をシステムへ転送して処理するために、大量のシグナリング資源を使用する必要がある。

したがって、ＯＦＤＭシステムに使用するアダプティブチャネル割当て方法およびシステムを使用すれば利点が得られる。この方法およびシステムは、システムのセル間の同一チャネル干渉を低減するようなＯＦＤＭ内の副搬送波の割り当てを行わなければならない。この方法およびシステムは、また、チャネル割当て時にシステム資源を有効に利用するためにＯＦＤＭシステムのユニークな特徴を考慮するように設計しなければならない。本発明によりこのような方法およびシステムが提供される。

発明の要約

本発明により、直交周波数分割多重（ＯＦＤＭ）システムにおけるアダプティブチャネル割当て（ＡＣＡ）方法およびシステムが提供される。この方法および

システムにより、システムのセル間の同一チャネル干渉を緩和するようにＯＦＤＭシステムの各リンクへの副搬送波の割当てが行われる。

また、本発明により、非ＯＦＤＭシステムで使用するように設計されている従来のＡＣＡ方法およびシステムをＯＦＤＭシステム内で実施する時の困難や欠点が克服される。従来のＡＣＡ方法は、リンク当たり１チャネルが使用されるシステムへＲＦチャネルをアダプティブに割り当てるように設計されている。ＯＦＤＭシステムに応用する場合、これら従来のＡＣＡ方法では、ユーザへ割り当てられる全てのＯＦＤＭ副搬送波をアダプティブに割り当てる必要がある。全てのＯＦＤＭ副搬送波をＯＦＤＭシステムにアダプティブに割り当てるには、システムの送信機と受信機間でチャネル測定情報および割当て情報を転送するために必要な測定およびシグナリング資源があまりにも大量なものとなる。アダプティブに割り当てられる副搬送波を選択し、割当て決定基準を設定することにより、本発明の方法およびシステムでは有効なＡＣＡを提供しながら測定およびシグナリング資源の使用を最小限に抑えらる。

本発明の最初の局面において、ＯＦＤＭシステムの別々の各リンクでの通信に利用可能なＮ副搬送波の大きな群からＭ副搬送波の初期サブセットが選択される。数Ｍは特定リンクのデータレートによって決まり、システムのリンク間で変動することがある。次に、Ｍ副搬送波のサブセットはリンクを介して通信を運ぶのに使用される。通信が行われると、Ｍ副搬送波のサブセット内の副搬送波の信号品質レベル（Ｃ／Ｉ）、および利用可能なＮ副搬送波の全ての干渉レベル（Ｉ）が周期的に測定される。これらのＣ／ＩおよびＩ測定結果はシステムへ報告される。リンクを介した通信中に、システムはＭのセットの副搬送波よりも良好にリンク上の信号受信を行えるより好ましい未使用副搬送波を、リンクが存在するセル内で利用可能であるかどうかをＣ／ＩおよびＩ測定値から決定する。より好ましい副搬送波が存在すると決定されると、システムは未使用副搬送波を含むようにＭ副搬送波のサブセットを再構成する。

本発明の第２の局面において、移動局はリンク受信機として、ある選定報告期間に全ての測定結果ではなく測定結果の限定されたセットだけをシステムへ送信する。送信される測定結果の限定されたセットは、最低Ｃ／Ｉ測定結果の選定番

号および最低Ｉ測定結果の選定番号を含んでいる。結果の限定されたセットの送信により上りシグナリング資源の使用が低減される。

本発明の別の実施例では、リンク受信機としての移動局はＭ副搬送波のサブセット内の副搬送波の信号品質レベル（Ｃ／Ｉ）、および利用可能なＮ副搬送波の全ての干渉レベル（Ｉ）を周期的に測定する。次に、移動局はＣ／ＩおよびＩ測定値に基づいてリンクの候補置換副搬送波を決定し、副搬送波要求メッセージをシステムへ送信して候補副搬送波を割り当ててリンクの副搬送波を置換するよう要求する。システムは副搬送波受諾もしくは副搬送波拒絶メッセージにより副搬送波要求メッセージに応答する。副搬送波受諾メッセージが受信されると、移動局は候補置換副搬送波を含むようにＭ副搬送波のサブセットを再構成する。副搬送波が拒絶されると、移動局は新しい候補副搬送波を要求する副搬送波要求メッセージを送信する。

図面の簡単な説明

図１は本発明を実施することができるセルラー電気通信ネットワークを示す図。

図２Ａは本発明に従った直交周波数分割多重システムによる副搬送波の割当てを示す図。

図３Ａは本発明の実施例に従ったシステムのブロック図。

図３Ｂおよび図３Ｃは本発明の実施例に従った、それぞれ、リンク送信機およびリンク受信機のブロック図。

図４Ａおよび図４Ｂはリンク受信機により実行される本発明の実施例に従ったプロセスステップのフロー図。

図５はセルラー電気通信ネットワーク内で実行される本発明の実施例に従ったプロセスステップのフロー図。

図６Ａおよび図６Ｂはリンク受信機により実行される本発明の別の実施例に従ったプロセスステップのフロー図。

図７はセルラー電気通信システム内で実行される本発明の別の実施例に従ったプロセスステップのフロー図。

発明の詳細な説明

図１を参照して、本発明が一般的に関連する周波数分割多重（ＦＤＭ）セルラー電気通信システムを示す。図１において、任意の地理的エリアは複数の隣接無線カバレッジエリア、すなわちセルＣ１－Ｃ１０、へ分割することができる。図１のシステムには１０セルしか図示されていないが、セル数は遥かに多くすることができる。

各セルＣ１－Ｃ１０内にそれに関連して基地局があり、複数の基地局Ｂ１－Ｂ１０の対応する１つとして示されている。各基地局Ｂ１－Ｂ１０は、従来技術で周知のように、送信機、受信機および基地局コントローラを含んでいる。図１では、基地局Ｂ１－Ｂ１０はそれぞれ各セルＣ１－Ｃ１０の中心に配置されており、全指向性アンテナを備えている。しかしながら、別の構成のセルラー無線システムでは、基地局Ｂ１－Ｂ１０は周辺付近、すなわちセルＣ１－Ｃ１０の中心から離れて配置することができ、セルＣ１－Ｃ１０に全指向性もしくは指向性で無線信号を照射することができる。したがって、図１に示すセルラー無線システムは単なる説明用にすぎず、本発明が実施されるセルラー電気通信システムの考えられる実施例を制限するものではない。

引き続き図１を参照して、セルＣ１－Ｃ１０内には複数の移動局Ｍ１－Ｍ１０がある。ここでも、図１には１０基の移動局しか図示されていないが、実際上移動局の実際の数は遥かに多く常に基地局の数を大きく上回ることをお解り願いたい。さらに、いくつかのセルＣ１－Ｃ１０では移動局Ｍ１－Ｍ１０が見つからないが、セルＣ１－Ｃ１０の中の任意特定の１つに移動局Ｍ１－Ｍ１０が存在するか否かは、実際上セル内の１つの位置から別の位置へ、もしくは１つのセルから隣接セルや近隣セルへ、さらには特定のＭＳＣが受け持つ１つのセルラー無線システムからこのような別のシステムへローミングすることがある移動局Ｍ１－Ｍ１０のユーザの個別の要望によって決まることをお解り願いたい。

各移動局Ｍ１－Ｍ１０は１つもしくはいくつかの基地局Ｂ１－Ｂ１０および移動局交換局ＭＳＣを介して電話呼を開始もしくは受信することができる。移動局交換局ＭＳＣは通信リンク、例えば、ケーブルを介して図示する各基地局Ｂ１－Ｂ１０および、図示せぬ、固定公衆交換電話網ＰＳＴＮもしくは統合システムデ

ジタルネットワーク（ＩＳＤＮ）施設を含むことができる同様な固定網に接続することができる。移動局交換局ＭＳＣと基地局Ｂ１－Ｂ１０間、もしくは移動局

交換局ＭＳＣとＰＳＴＮもしくはＩＳＤＮ間の関連する接続は図１に完全には図示されていないが当業者ならば周知である。さらに、セルラー無線システムに２つ以上の移動局交換局を含め、各付加移動局交換局をケーブルや無線リンクを介して異なる基地局群および他の移動局交換局に接続することも知られている。

各ＭＳＣはシステム内で各基地局Ｂ１－Ｂ１０およびそれと通信する移動局Ｍ１－Ｍ１０間の通信の管理を制御することができる。移動局がシステムの周りをローミングすると、移動局はそれが位置するエリアを制御する基地局を介してその位置をシステムに登録する。移動局電気通信システムが特定の移動局へアドレスされた呼を受信すると、その移動局へアドレスされたページングメッセージが、移動局が位置すると思われるエリアを制御する基地局の制御チャネルを介して同報される。そこへアドレスされたページングメッセージを受信すると、移動局はシステムアクセスチャネルを走査して最強アクセスチャネル信号を受信した基地局へページ応答を送る。次に、呼接続を生じるプロセスが開始される。ＭＳＣは、通信の進行中にセルからセルへシステム中を移動する移動局に応答して移動局との通信を１つの基地局から別の基地局へ切替えを制御するだけでなく、その基地局Ｂ１－Ｂ１０が受け持つ地理的エリアにいると思われる移動局のその移動局に対する呼の受信に応答したページング、移動局からページ応答を受信した時の基地局による移動局への無線チャネルの割当て、を制御する。

各セルＣ１－Ｃ１０に複数のＦＤＭ副搬送波および少なくとも１つの専用制御チャネルが割り当てられる。制御チャネルはこれらのユニットに対して送受信される情報により移動局の動作を制御もしくは管理するのに使用される。このような情報には着信呼信号、発信呼信号、ページ信号、ページ応答信号、位置登録信号および音声およびトラフッィク副搬送波割当てを含むことができる。

本発明には、図１に示すようにアダプティブチャネル割当（ＡＣＡ）方法およびシステムをＦＤＭセルラーシステムに実施することが含まれる。本発明の代表的な実施例では、５ＭＨｚの総システム帯域幅および５ｋＨｚの副搬送波で作動

するＯＦＤＭシステムにＡＣＡが実施される。このシステムに利用可能な総副搬送波数はおよそ５ＭＨｚ／５ｋＨｚ＝１０００となる。副搬送波は２ＧＨｚの周波数でシステムＲＦ搬送波へ変調されてシステムＲＦチャネルを介して伝送され、

送信信号の周波数スペクトルはＲＦ搬送波を中心としている。全ての搬送波を各セル内で使用することができるが、副搬送波はセル内の２つ以上のリンクで同時に使用することはできない。周波数分割二重化（ＦＤＤ）が上りおよび下り副搬送波の分離に使用される。本システムは、切替制御情報、長期チャネル割当情報、長期電力制御情報および測定メッセージおよび測定結果を伝送する上りおよび下りの両チャネルである専用制御チャネル（ＤＣＣＨ）を含んでいる。本システムは、また、短期チャネル割当情報、短期電力制御情報、測定メッセージおよび測定結果を伝送する上りおよび下りの両チャネルである物理的制御チャネル（ＰＣＣＨ）も含んでいる。

本発明のＡＣＡでは、移動局と基地局間の各上り／下りリンクに対して、システムはいくつか（Ｎ）の副搬送波のセットからいくつか（Ｍ）の副搬送波のサブセットを選択する。Ｎ副搬送波のセットは各リンクに対してシステム内で利用可能な副搬送波のセットであり、Ｎ＞Ｍである。Ｎ副搬送波のセットは通信中は変動しない。Ｎ副搬送波のセットはシステムの全副搬送波を含むことができる。また、Ｎ副搬送波のセットは利用可能な副搬送波の総数よりは少ないがＭ副搬送波のサブセット内の搬送波数よりも多いセットとすることができる。

次に、図２を参照して、ＯＦＤＭシステムにおける本発明に従った副搬送波の割当てを示す。基地局２００は下りリンク２０６および上りリンク２０８を介して移動局２０２と通信する。基地局２００は下りリンク２１０および上りリンク２１２を介して移動局２０４とも通信する。リンク２０６，２０８，２１０および２１２を介した伝送はシステムＲＦチャネルにより行われる。各リンクを介して伝送される音声およびデータはいくつか（Ｍ）の副搬送波により変調される。次に、Ｍ副搬送波はシステムＲＦチャネルにより変調されてシステムＲＦチャネルにより伝送される。セル内の各リンク２０６，２０８，２１０および２１２は

Ｍ副搬送波の別々のサブセットを使用する。副搬送波はセル内で１回しか使用できない。

次に、図３Ａを参照して、本発明に従ったシステムのブロック図を示す。本システムはリンク送信機３００、リンク受信機３３０、ＡＣＡ処理部３６０およびＲＦチャネル３８０により構成される。特定リンクの受信機３３０および送信機３００はリンクの両端に配置されている。下りリンクでは、受信機３３０は移動局内に配置され送信機３００は基地局内に配置されている。上りリンクでは、受信機３３０は基地局内に配置され送信機３００は移動局内に配置されている。ＲＦチャネルは利用可能なＮ副搬送波のセットを有している。リンク受信機３３０およびリンク送信機は、利用可能なＭ副搬送波のサブセットを使用してＲＦチャネル３８０により通信する。

次に、図３Ｂおよび図３Ｃを参照して、図３Ａのそれぞれ送信機３００および受信機３３０の機能ブロック図を示す。図３Ｂおよび図３Ｃに示す機能的特徴は基地局および移動局の両方の受信機および送信機に共通である。

送信機３００はシリアル／パラレルコンバータ３０２、マッピング回路（ＭＡＰ）３０４、逆高速フーリエ変換（ＩＦＦＴ）回路３０６、周波数マルチプレクサ（ＭｕＸ）３０８、および変調器３１０を含んでいる。送信機の動作において、シリアル／パラレルコンバータ３０２はシリアルデジタルデータストリーム３１２をＭシンボルのブロック３１４へ変換し、Ｍはシンボルサイズおよびシステムのデータレートにより決定される。次に、ＭシンボルはＭＡＰ回路３０４へ入力され、Ｍシンボルの各々がＩＦＦＴ回路３０６の副搬送波入力へマップされる。次に、ＩＦＦＴ回路３０６へ入力されるデータブロックに逆高速フーリエ変換（ＩＦＦＴ）が実行される。次に、ＩＦＦＴ回路３０６のＮ出力に発生される信号３１８がＭｕＸ３０８において多重化されて、各々がＭシンボル３１４の中の１つのシンボルを含むデータを運ぶ、多重化されたＭ副搬送波を含む信号３２０が作り出される。次に、信号３２０は変調器３１０においてシステムＲＦ搬送波３２４上へ変調され、ＯＦＤＭ信号としてシステムＲＦチャネル３２２により伝送される。

受信機３３０は復調器３３２、周波数デマルチプレクサ（ＤＥＭＵＸ）３３４、高速フーリエ変換回路３３６、デマッピング回路（ＤＥＭＡＰ）３３８、パラレル／シリアルコンバータ３４０、干渉測定手段３４４、信号品質測定手段３４２およびプロセッサ３４６を含んでいる。受信機の動作において、システムＲＦ搬送波がシステムＲＦチャネル３２２により受信され次に復調器３３２において復調され、ＤＥＭＵＸ３３４においてデマルチプレクされて、多重化されたＭ副搬

送波を含む信号のＮサンプル３４８が得られる。次に、Ｎサンプル３４８を入力として、ＦＦＴ回路３３６により高速フーリエ変換（ＦＦＴ）が実行され、各副搬送波により伝送された任意の変調データを含むデータ信号３５０を発生する。復調されＦＦＴされるＮ副搬送波はプロセッサ３４６からＤＥＭＵＸ３３４およびＦＦＴ回路３３６へ入力されるパラメータにより決定される。干渉測定手段３４４はＮサンプル３４８の各々から回復される各データ信号３５０の干渉（Ｉ）レベルを測定する。次に、Ｎ受信データ信号３５０がデマッピングブロック３３８へ入力され、現在リンク通信に割り当てられているＭ副搬送波周波数Ｎデータ信号３５０からデマップされる。デマッピングはプロセッサ３４６からＤＥＭＡＰブロック３３８へ入力されるパラメータに従って行われる。次に、デマップされたＭデータ信号３５２がパラレル／シリアルコンバータ３４０へ入力されてシリアル受信データ３５４へ変換される。受信機３３０が受信しているリンクに現在割り当てられているＭ副搬送波周波数により受信されるデマップされたＭデータ信号３５２の各々について、デマッピングブロック３３８の出力において信号品質（Ｃ／Ｉ）が測定される。

各リンクに対するアダプティブチャネル割当ては、リンク受信機内で実行される測定の結果を演算する図３ＡのＡＣＡ処理部３６０により実行される。図示する実施例では、プロセッサ３４６は干渉測定手段３４４からの干渉測定値および信号品質測定手段３４２からの信号品質測定結果を受信する。プロセッサ３４６は測定結果を演算してシステムのＡＣＡ処理部３６０へ入力するデータを発生する。次に、プロセッサ３４６から発生されたデータはインターフェイス３６２を

介してＡＣＡ処理部３６０へ転送される。図示する実施例では、ＡＣＡ処理部３６０はＭＳＣ内に配置されている。ＡＣＡ処理部３６０はシステムの基地局内に配置することもできる。ＡＣＡ処理部により実行される機能を移動局、基地局およびＭＳＣ間に分散することも考えられる。必要なデータを格納するメモリの構成方法、およびこの種の機能を実行するマイクロプロセッサおよびソフトウェアの構成方法は当業者ならば周知である。

移動局がリンク受信機として機能する場合には、プロセッサ３４６はＡＣＡデータを移動局送信機へ転送し、適切な制御チャネルの上りリンクを含むインターフェイス３６２を介してシステムへ伝送する。リンク受信機としての基地局において、プロセッサ３４６はランドラインおよび他の接続を含むインターフェイス３６２を介してＭＳＣへＡＣＡデータを転送する。ＡＣＡ処理部３６０はデータを演算し、基地局がリンク受信機である場合にはランドラインもしくは他の接続を含み、移動局がリンク受信機である場合には適切な制御チャネルの下りリンクを含む、インターフェイス３６４を介してリンク受信機３３０へ適切な副搬送波割当てコマンドを戻す。リンク受信機３３０のプロセッサ３４６はコマンドを受信し、次に、リンクに正しい副搬送波が受信されるように受信機に正しい入力パラメータを発生する。また、ＡＣＡ処理部３６０はインターフェイス３６６を介してリンク送信機３００に関連するＭＡＰ回路３０４へコマンドを送る。次に、ＭＡＰ回路３０４はＭシンボルをＭＡＰ回路３０４の適切な出力へマップして、Ｍ副搬送波の正しいサブセットが伝送されるようにする。

移動局、基地局およびシステムのＭＳＣ間の必要なデータ転送は周知の方法により達成することができる。ここに記載する実施例では、ＤＣＣＨおよびＰＣＣＨチャネルを上りおよび下りの両方で使用して、移動局とシステムの間で測定結果や副搬送波割当てメッセージを転送することができる。

次に、図４Ａを参照して、ＡＣＡプロセス中にリンク受信機３３０により実行されるステップを示すフロー図を示す。下りリンクで受信する移動局により実行されるステップおよび上りリンクで受信する基地局により実行されるステップは本質的に同じであり、図４Ａは両方の場合にリンク受信機３３０により実行され

るステップを説明するのに使用することができる。移動局および基地局で実行されるプロセスステップの違いは図４Ａのステップ４２８である。図４ＢはＡＣＡ測定プロセスのステップ４２８中に移動局により実行される付加ステップを示すフロー図である。これらの特別なステップは、図４Ａのプロセスを説明する時に図４Ｂを参照して説明される。

ＡＣＡプロセスは、上りリンクもしくは下りリンクのいずれかにより一対の移動局および基地局間にシステムが通信リンクを作り出す必要がある時に開始される。再び図４Ａを参照して、ステップ４０２においてリンク受信機はシステムから測定順メッセージを受信して、リンクに利用可能な一群のＮ副搬送波の各々の

干渉（Ｉ）を測定する。Ｎ副搬送波はシステム内で利用可能な全ての副搬送波もしくはシステム内で利用可能な全ての副搬送波から選択される小さな一群の副搬送波とすることができる。次に、ステップ４０４において、Ｉが実行される。次に、ステップ４０４からプロセスはステップ４０６へ移り、そこでＩ測定結果がシステムへ送られる。移動局がリンク受信機であれば、Ｉ測定結果はＤＣＣＨもしくはＰＣＣＨチャネルを介して基地局へ送信され、次に、ＭＳＣへ転送される。基地局がリンク受信機であれば、Ｉ測定結果は適切なオーバランド手段を介してＭＳＣへ転送される。Ｉ測定結果を送信した後で、プロセスはステップ４０８へ移り、そこでリンク受信機はシステムからの応答を待つ。次に、図５を参照して、リンク受信機がステップ４０８において待機状態である時にとられるステップについて説明する。

図５を参照して、ＡＣＡプロセス中にシステムのＡＣＡ処理部内で実行されるプロセスステップを示す。ステップ５０２において、リンク受信機がＮ副搬送波により実行するＩ測定の結果がＡＣＡプロセッサにより受信される。次に、ステップ５０４において、ＡＣＡプロセッサはＮ副搬送波によるＩ測定の結果から最小干渉未使用Ｍ副搬送波を決定する。ステップ５０５からプロセスはステップ５０６へ移り、そこで、最小干渉Ｍ副搬送波のサブセットをリンクへ割り当てる副搬送波割当てメッセージがリンク受信機およびリンク送信機の両方へ送られる。ここで、ＡＣＡプロセッサはステップ５０８へ移り、リンク受信機からの入力を

さらに待機する。次に、プロセスフローは図４Ａのステップ４０８へ戻る。副搬送波割当てメッセージのＭ副搬送波を決定する別の方法をステップ５０６の替わりに使用することができる。例えば、副搬送波は、それらの使用が近隣セルの送信にどのような影響を及ぼすかに基づいて割り当てることができた。最小干渉Ｍ副搬送波の１つが近隣セルで使用される場合には、副搬送波は使用されないことがある。この場合、Ｍ副搬送波は最小干渉Ｍ副搬送波ではないことがある。

再び図４Ａを参照して、４０８において待機状態であるリンク受信機はステップ４１０へ移り、Ｍ副搬送波のサブセットをリンクへ割り当てるチャネル割り当てメッセージを受信する。次に、リンク受信機がＭ副搬送波の割り当てられたサブセットを使用するリンクによる受信を開始すると、プロセスはステップ４１２へ移る。次に、ステップ４１２からプロセスはステップ４１４へ移り入力をさらに待機する。ステップ４１６において、入力が受信される。リンク受信機は、Ｍ副搬送波の割り当てられたサブセットを使用して受信しながら、３種の入力を受信することができる。判断ステップ４１８において、リンク受信機は呼終了信号が受信されているかどうかを確認する。呼終了信号が受信されておれば、プロセスは終わる。呼終了信号はシステムによりリンク受信機へ送信されていたり、リンク受信機自体において開始されていることがある。呼終了信号はリンクを介した通信が終止していることをプロセスに示す。呼終了信号が受信されていなければ、プロセスはステップ４２０へ移り、リンク受信機は測定タイマメッセージが受信されているかどうかを確認する。測定タイマはリンク受信機に関連するプロセッサ内に含まれている。測定タイマは周期的間隔で測定メッセージを発生してリンク受信機に測定を行うよう知らせる。各測定タイマ信号により測定間隔が規定される。測定タイマメッセージが受信されておれば、プロセスはステップ４２４へ移る。ステップ４２４において、リンク受信機はＮ副搬送波のセットについてＩを測定する。Ｉ測定値は各副搬送波に対するある数の前のＩ測定値の結果を平均化して精度を得ることができる。最初にステップ４２４を通る時に、測定値はステップ４０４で得られる結果で平均化される。その後にステップ４２４を通る時は、測定結果は前の最後のｎ測定値により平均化され、ｎはシステム内で副

搬送波の干渉レベルを正確に追従できる値である。ステップ４２４からプロセスはステップ４２６へ移り、リンク受信機はＭ搬送波のサブセットの各々についてＣ／Ｉを測定する。Ｃ／Ｉ測定値も前の最後のｎのＣ／Ｉ測定値により平均化される。次に、ステップ４２８において、リンク受信機はＩおよびＣ／Ｉ測定結果をシステムのＡＣＡ処理部へ送る。リンク受信機が基地局であるか移動局であるかに応じて、ステップ４２８は異なる方法で実行することができる。リンク受信機が基地局であれば、平均化された測定結果がＡＣＡプロセッサへ直送される。リンク受信機が下りリンク内の移動局であれば、図４Ｂに示すサブステップを使用して、結果が基地局を介して上りリンクによりシステムへ送信される時のシグナリングトラフィックを低減することができる。

次に、図４Ｂを参照して、図４Ａのステップ４２８を実行する移動局により実行されるプロセスサブステップを示す。上りリンクのシグナリングトラフィックは、測定結果の異なるセットを異なる時間間隔にわたってシステムへ送信することにより低減される。長い報告期間にわたって、全てのＩ測定値およびＣ／Ｉ測定結果がシステムへ送信される。より短い報告期間にわたって、Ｉ測定値およびＣ／Ｉ測定結果の各々の低減されたセットが送信される。長いおよび短い期間は、第ｎ番の短い期間毎にもしくは第ｎ番の測定期間毎に長い期間が生じるように規定することができ、ｎは例えば２５等の数である。ステップ４２８ａにおいて、移動局は測定期間に測定結果を報告する短い時間間隔が含まれているどうかを確認する。測定期間に測定結果を報告する短い時間間隔が含まれていることが確認されれば、プロセスはステップ４２８ｂへ移り、そこで移動局はＭ副搬送波のサブセットのＹの最悪品質副搬送波に対するＣ／Ｉ測定値、Ｙ＜Ｍ、およびＮ副搬送波のＺの最小干渉に対するＩ測定値、Ｚ＜Ｎ、をシステムへ送信する。ＹおよびＺの値は、シグナリングトラフィックを最小限に抑えながら有効なＡＣＡに対する適切な情報を与えるように選択される。Ｙは１に設定することができ、Ｚは同じセル内で使用されない少なくとも１つの副搬送波のＩ測定結果を平均として含む計算された数に設定することができる。次に、プロセスはステップ４１４へ移り、そこで移動局はさらに入力を待機する。しかしながら、ステップ４２８

ａにおいて、測定期間に測定結果を報告するための短い時間間隔が含まれないことが確認されると、プロセスはステップ４２８ｃへ移る。ステップ４２８ｃにおいて、移動局はＭ副搬送波の全サブセットに対するＣ／Ｉ測定値および全Ｎ副搬送波に対するＩ測定値をシステムへ送る。次に、プロセスはステップ４１４へ移り、そこで移動局はさらに入力を待機する。次に、ＡＣＡプロセッサがリンク受信機から測定結果を受信するとプロセスフローは図５へ移る。

再び、図５を参照して、ステップ５０８において待機状態にあるＡＣＡプロセッサは、ステップ５１０においてリンク受信機からの入力を受信する。ステップ５１０において、ＡＣＡプロセッサは測定結果もしくは呼終了信号を受信することができる。入力が受信されると、プロセッサはステップ５１２へ移り、そこでどのタイプの入力が受信されたかが確認される。セル終了信号が受信されると、プロセスが終わる。この例では、受信メッセージは測定結果であるためプロセス

はステップ５１４へ移る。ステップ５１４において、ＡＣＡプロセッサはＭのサブセットの副搬送波が最低Ｃ／Ｉ測定値を有する副搬送波を使用したかどうかを確認する。次に、ステップ５１６において、Ｍ副搬送波のサブセットの最低Ｃ／Ｉ測定値がＡＣＡ　Ｃ／Ｉトリガしきい値よりも低いかどうかが確認される。ステップ５１６において、最低Ｃ／Ｉ測定値がＡＣＡ　Ｃ／Ｉトリガしきい値よりも低くないことが確認されれば、プロセスフローはステップ５０８へ戻りそこでＡＣＡプロセッサはさらに入力を待機する。しかしながら、ステップ５１６において、最低Ｃ／Ｉ測定値がＡＣＡ　Ｃ／Ｉトリガしきい値よりも低いことが確認されれば、プロセスフローはステップ５１８へ移る。ステップ５１８において、ＡＣＡプロセッサは最低Ｃ／Ｉ測定値を有するＭのサブセットの副搬送波のＩ測定値よりも小さいＩ測定値を有するＮ副搬送波のセットの未使用副搬送波が存在するかどうかを確認する。ステップ５１８において、小さいＩ測定値を有する未使用副搬送波が存在しないことが確認されれば、プロセスフローはステップ５０８へ戻りそこでＡＣＡプロセッサはさらに入力を待機する。しかしながら、ステップ５１８において小さいＩ測定値を有する未使用副搬送波が存在すれば、より好ましい副搬送波が存在し、プロセスはステップ５２０へ移る。ステップ５２０

において、ＡＣＡプロセッサは最小干渉未使用副搬送波をＭ副搬送波のサブセットへ挿入して、最低Ｃ／Ｉ測定値を有するＭのサブセットの副搬送波をサブセットから除去する。ヒステリシス効果を回避するために、ステップ５１８中に最小干渉未使用副搬送波に対するＣ／Ｉを算出した後で副搬送波の変化を行って、算出したＣ／Ｉが除去すべき副搬送波のＣ／Ｉよりも最少量上回ることを確認することができる。最小干渉未使用副搬送波に対するＣ／Ｉが除去すべき副搬送波のＣ／Ｉを最少量上回らない場合には、未使用副搬送波は置換副搬送波として受諾できないと見なされる。ステップ５２０から、プロセスはステップ５２２へ移り、そこでシステムは再構成サブセットメッセージをリンク受信機へ送り、リンクに割り当てられたＭ副搬送波のサブセットを再構成してプロセッサが行う変化に従わせるようリンク受信機を命令する。次に、ＡＣＡプロセッサはステップ５０８へ移り、さらにリンク受信機からの入力を待機する。複数のより干渉の少ない未使用副搬送波を決定しそれらをＣ／Ｉしきい値よりも干渉の少ない複数の未使用

副搬送波と交換することにより、ステップ５１４－５２０による手順を交互に実行することができる。サブセットは他の基準に従って再構成することもできる。例えば、リンクのセル内で、サブセットを使用することが近隣セル内で生じる通信へ及ぼす影響に基づいてＭのサブセットを再構成することができる。セル内で使用されるいくつかのＭ副搬送波が近隣セルでも使用される場合には、それらは近隣セルでも使用されないセル内で未使用の副搬送波と置換することができる。使用する副搬送波がＣ／Ｉしきい値よりも小さくなかったり、未使用副搬送波の干渉レベルが置換した副搬送波よりも大きい場合でも、再構成を行うことができる。

呼が進行しリンクを介した通信が継続する限り、プロセスは継続する。次に、リンク受信機は入力を受信するとステップ４０８の待機状態から移り、呼が終了するまで図４Ａ、図４Ｂおよび図５に示すプロセストテップが繰り返され、呼終了信号がリンク送信機、リンク受信機およびシステムのＡＣＡ処理部により受信される。

本発明の別の実施例では、リンク受信機としての移動局は、リンク上で使用される、Ｍ副搬送波のあるサブセットを要求する、もしくはＭ副搬送波と置換する副搬送波を要求する要求メッセージを送信する。信号測定結果は移動局からシステムへ送信する必要がない。次に、システムはサブセット受諾もしくは副搬送波受諾メッセージを移動局へ送信する。下りリンクＡＣＡ処理は主として移動局内の受信機のプロセッサ３４６内で行われる。この実施例では、最初の実施例のシステムにより実行される、図５に示すステップ５０４，５１４，５１６，５１８および５２０は移動局内のプロセッサ３４６により実行される。上りリンク測定のための基地局ＡＣＡプロセスフローは図４Ａ、図４Ｂおよび図５に示すものと変わらない。

次に、図６Ａを参照して、本発明の別の実施例のＡＣＡプロセス中にリンク受信機としての移動局により実行されるステップを示すフロー図を示す。ＡＣＡプロセスは移動局がステップ６０２において測定順メッセージを受信する時に開始される。次に、ステップ６０４において、リンクにとって利用可能なＮ副搬送波群の各々について干渉（Ｉ）が移動局で測定される。次に、プロセスはステップ６０６へ移り、そこで最少干渉Ｍ副搬送波が決定される。ステップ６０６から、プロセスはステップ６０８へ移り、サブセット要求メッセージが移動局によりシステムへ送られる。サブセット要求メッセージは、移動局が要求したサブセット内の各副搬送波の使用を要求することをシステムへ示す。次に、プロセスはステップ６１０へ移り、移動局はシステムからの返答を待機する。次に、図７を参照して、プロセスがステップ６１０において待機状態である時にとられるプロセスステップについて説明する。

図７を参照して、ＡＣＡプロセスに移動局が含まれる場合に本発明の別の実施例に従ったシステムのＡＣＡ処理部内で実行されるプロセスステップを示す。ステップ７０２において、ＡＣＡ処理部はサブセット要求メッセージを受信する。次に、ステップ７０４において、システムは移動機が要求したサブセット内のＭ副搬送波の全てを使用できるかどうかを確認する。例えば、他の移動局が使用中であったり、特殊用途のためにシステム内に保存されている場合、ある副搬送波

はセル内で利用できないことがある。Ｍ副搬送波の可用性はその使用が近隣セルの通信に及ぼす影響として決定することもできる。ＡＣＡはシステムオペレータがこれらの判断を行う際に柔軟性を与えるように設計される。移動局が要求したサブセット内のＭ副搬送波を全て使用できることが確認されれば、システムはサブセット受諾メッセージをリンク受信機へ送信する。しかしながら、ステップ７０４において、提示されるサブセットの副搬送波は移動局により使用されないことが確認されると、プロセスはステップ７２０へ移りシステムは利用不能な副搬送波を拒絶する副搬送波拒絶メッセージをＭ副搬送波のサブセットの一部として送信する。次に、プロセスフローはステップ７２２へ移り移動局からの返答を待機する。

次に、図６Ａを参照して、ステップ６１２において、移動局はシステムから送信されるサブセット受諾メッセージもしくは副搬送波拒絶メッセージを受信する。サブセット受諾メッセージが受信されると、プロセスはステップ６２０へ移りそこでリンク受信機は割り当てられたサブセットを使用して受信を開始する。しかしながら、ステップ６１４において、副搬送波拒絶メッセージが受信されていることが確認されると、プロセスはステップ６１６へ移る。ステップ６１６においい

て、リンク受信機は拒絶された要求副搬送波と置換する次の候補を決定する。これらの候補はＭの提示されたセット内には無い利用可能なＮ副搬送波のセットの次に干渉の少ない副搬送波である。

ステップ６１６から、プロセスはステップ６１８へ移りそこで次の候補副搬送波を要求する副搬送波要求メッセージがシステムへ送信される。次に、プロセスはステップ６１０へ移りリンク受信機は返答を待つ。Ｍ副搬送波の完全なサブセットが受諾されるまで、プロセスはステップ６１０，６１２，６１４，６１６，６１８，および７０６，７０８により形成されるループを継続する。次に、プロセスはステップ６２０へ移り、そこで移動局は受諾されたサブセットを使用してリンクを介した受信を開始する。次に、プロセスはステップ６２２の待機状態へ移る。ステップ６２２の待機状態において、プロセスは呼終了もしくは測定タイ

マメッセージを受信することができる。呼終了および測定タイマメッセージは本発明の前記実施例について説明した呼終了および測定メッセージと同等である。リンク受信機はステップ６２４において呼終了もしくは測定タイマメッセージを受信してステップ６２６へ移り、そこで呼終了が受信されているかどうかが確認される。呼終了が受信されておれば、プロセスは終了する。しかしながら、測定タイマメッセージが受信されておれば、プロセスはステップ６２８へ移る。ステップ６２８において、移動局は利用可能なＮ副搬送波の全てについてＩを測定し、各副搬送波について結果を平均化する。次に、ステップ６３０において、リンク受信機はＭ副搬送波のサブセットについてＣ／Ｉを測定し、各副搬送波について結果を平均化する。次に、プロセスは図６Ｂのステップ６３２へ移る。

ステップ６３２において、リンク受信機は最低Ｃ／Ｉを有するＭのサブセットの副搬送波を決定する。次に、ステップ６３４において、最低Ｃ／Ｉがしきい値よりも小さいかどうかが確認される。しきい値よりも小さくなければ、プロセスはステップ６２２へ戻りそこでリンク受信機は別の呼終了もしくは測定タイマメッセージを待機する。しかしながら、最低Ｃ／Ｉがしきい値Ｃ／Ｉよりも小さいことが確認されると、プロセスはステップ６３６へ移る。ステップ６３６において、Ｎのセットのより干渉の少ない副搬送波がＭのセット内に存在しないかどうかが確認される。より干渉の少ない副搬送波が存在しなければ、プロセスはステ

ップ６２２へ戻る。しかしながら、より干渉の少ない副搬送波が存在すれば、より好ましい副搬送波が存在しプロセスはステップ６３８へ移る。ステップ６３８において、移動局は副搬送波要求メッセージをシステムへ送信して、Ｍ副搬送波のサブセット内に無い最少干渉副搬送波を最低Ｃ／Ｉ副搬送波に置換する副搬送波として要求する。次に、移動局内のプロセスはステップ６４０の待機状態へ移りプロセスフローは図７のステップ７０８へ移る。システムのＡＣＡ処理部はステップ７１０において要求した副搬送波メッセージを受信する。ステップ６３２－６３８で略述した手順は、サブセットの最低Ｃ／Ｉを有する複数の使用副搬送波を決定し、次に複数のより干渉の少ない未使用副搬送波を要求した置換副搬送波と決定して実行することもできる。副搬送波要求メッセージの受信後、ステッ

プ７１６において、要求した副搬送波が別の移動局のあるリンクを介してセル内で使用されるかどうかが確認される。要求した副搬送波がセル内で使用される場合、システムはステップ７１８へ移って要求した副搬送波拒絶メッセージを移動局へ送信し、プロセスはステップ７０８へ戻る。しかしながら、提示された置換副搬送波がセル内で使用されない場合には、システムは要求した副搬送波受諾メッセージを移動局へ送信し、プロセスはステップ７０８へ戻る。要求した副搬送波がセルにより使用されるかどうかを確認する替わりに、他の基準を使用して可用性を決定することができる。例えば、要求した副搬送波が近隣セル内で使用される場合には、システムは副搬送波要求を拒絶することができる。次に、プロセスはステップ６４０の待機状態からステップ６４２へ移り、移動局は受諾もしくは拒絶メッセージを受信する。次に、ステップ６４４において、要求した副搬送波が受諾されたかどうかが確認される。要求した副搬送波が受諾されておれば、プロセスはステップ６４６へ移り移動局はそれを介して受信しているＭ副搬送波のサブセットを、要求した副搬送波を含み最低Ｃ／Ｉ副搬送波を削除するように再構成する。次に、プロセスはステップ６２２の待機状態へ移る。しかしながら、要求した副搬送波が受諾されなければ、プロセスはステップ６４８へ移る。ステップ６４８において、移動局は、この測定期間内で要求した副搬送波としてまだ拒絶されていない、最低Ｃ／ＩのＭ副搬送波の搬送波よりも干渉が少ない新しい副搬送波が存在するかどうかを確認する。新しい候補副搬送波が存在しなければ、

プロセスはステップ６２２の待機状態へ移る。しかしながら、新しい候補副搬送波が存在すれば、プロセスはステップ６３８へ移りそこで移動局は副搬送波要求メッセージをシステムへ送信する。メッセージはステップ６４８で見つけた新しい候補副搬送波を新しい置換副搬送波として要求する。次に、プロセスはステップ６４０へ移りシステムからの返答を待つ。要求した副搬送波が受諾されるかあるいは新しい候補が存在しなくなるまで、プロセスはステップ６４２，６４４，６４８，６５０および６３８および７１０，７１２，７１４および７１６もしくは７１８により形成されるループを継続する。次に、プロセスはステップ６２２

の待機状態へ移る。ＡＣＡプロセスは呼全体を通して継続され、測定タイマメッセージが受信される度に呼び出される。呼が終了すると、プロセスはステップ６２４および６２６を通って終了する。

前記説明からお判りのように、本発明によりＯＦＤＭシステム用アダプティブチャネル割当て方法およびシステムが提供される。本発明を使用すれば、それを実施するＯＦＤＭシステムの性能が向上する。アダプティブチャネル割当ては、システム上りリンクを介して測定結果を運ぶのに必要なシグナリング資源を最小限に抑え、しかもアダプティブチャネル割当ての利点を提供するように設計されている。その結果、スペクトル効率が高く、消失呼が少なく各リンクについて良好な品質の通信を行えるシステムが得られる。

本発明の動作および構造は前記した説明から明白であり、ここに図示しかつ説明した本発明は特定の実施例として特徴付けられるものであるが、請求の範囲に明示された発明の精神および範囲を逸脱することなく変更や修正が可能である。

【図１】

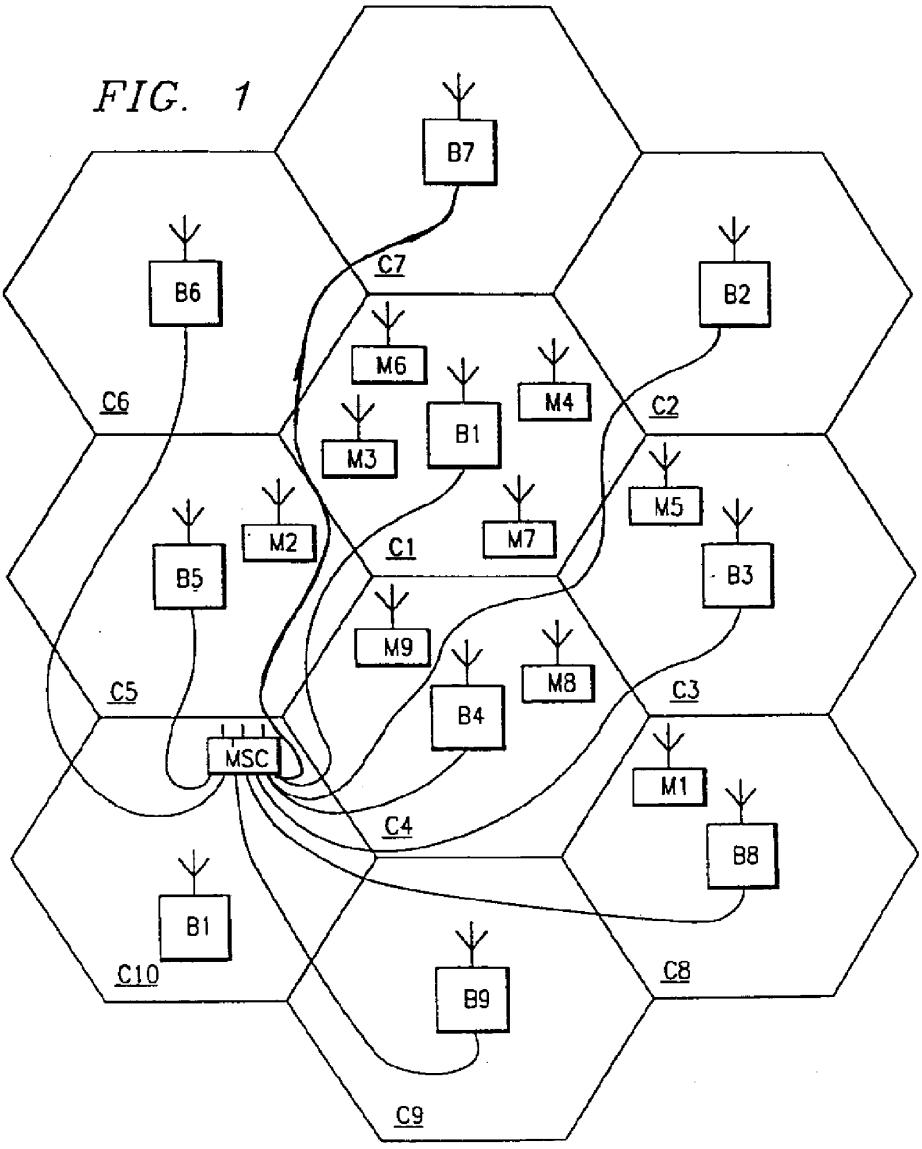
FIG. 1
B7
B6
B2
C7
M6
M4
C6
C2
M3
B1
M5
M2
M7
B5
C1
B3
M9
M8
C5
B4
C3
MSC
M1
C4
B8
B1
C10
B9
C8
C9

【図２】

FIG. 2

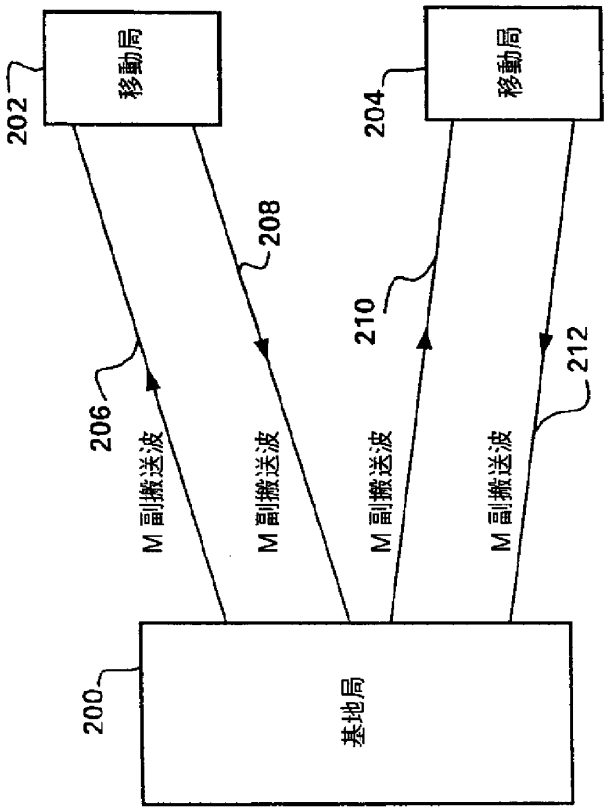
移動局
202
移動局
204
208
210
212
206
M 副搬送波
M 副搬送波
M 副搬送波
M 副搬送波
200
基地局

【図３】

FIG. 3A

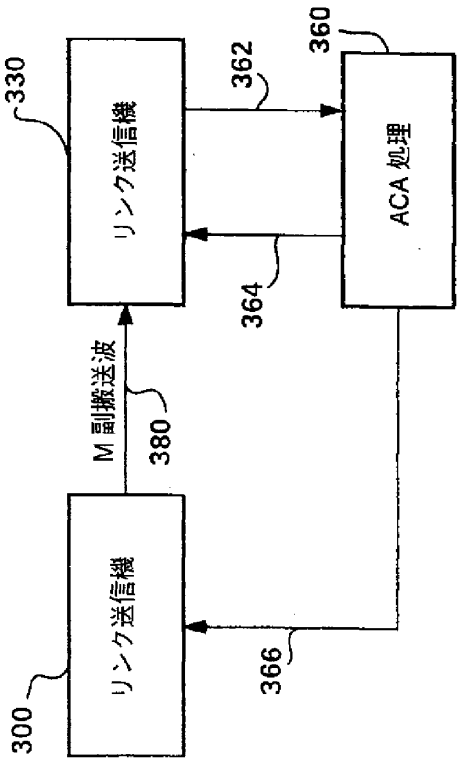

【図３】

FIG. 3B

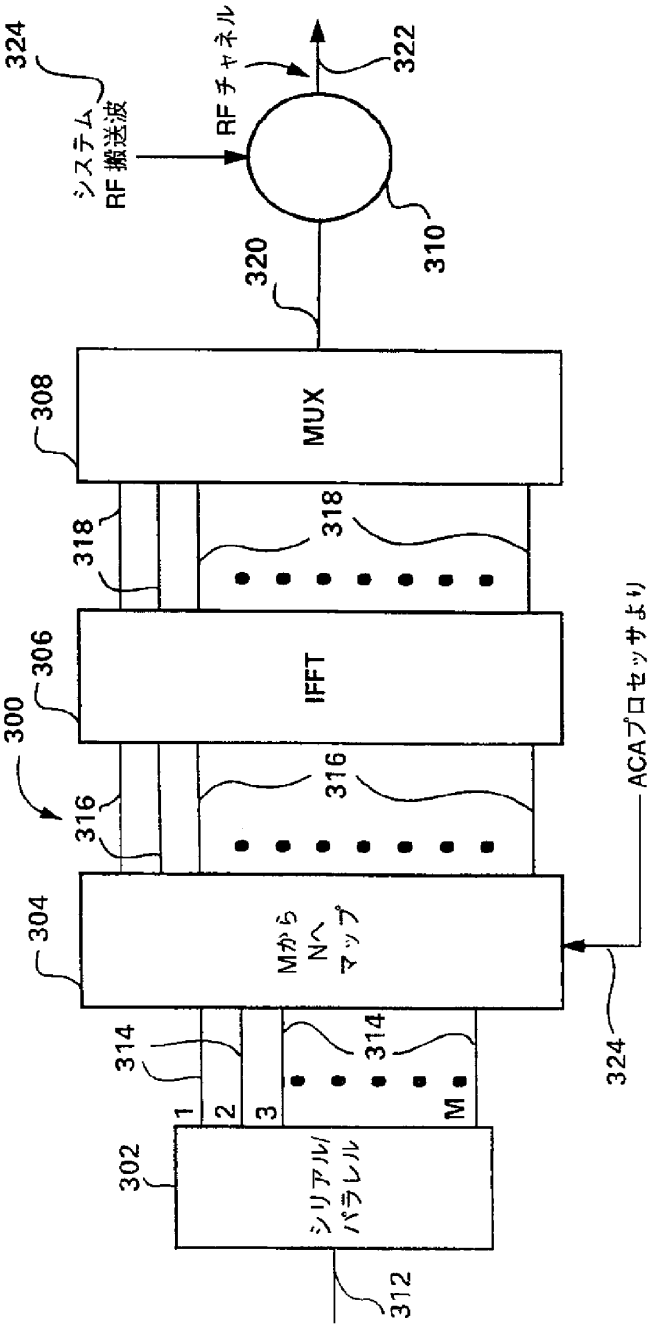
324
システム
RF 搬送波
RF チャネル
322
310
320
308
MUX
318
318
306
IFFT
300
316
316
304
Mから
Nへ
マップ
ACAプロセッサより
314
314
1
2
3
M
302
シリアル/
パラレル
312
324

【図３】

FIG. 3C

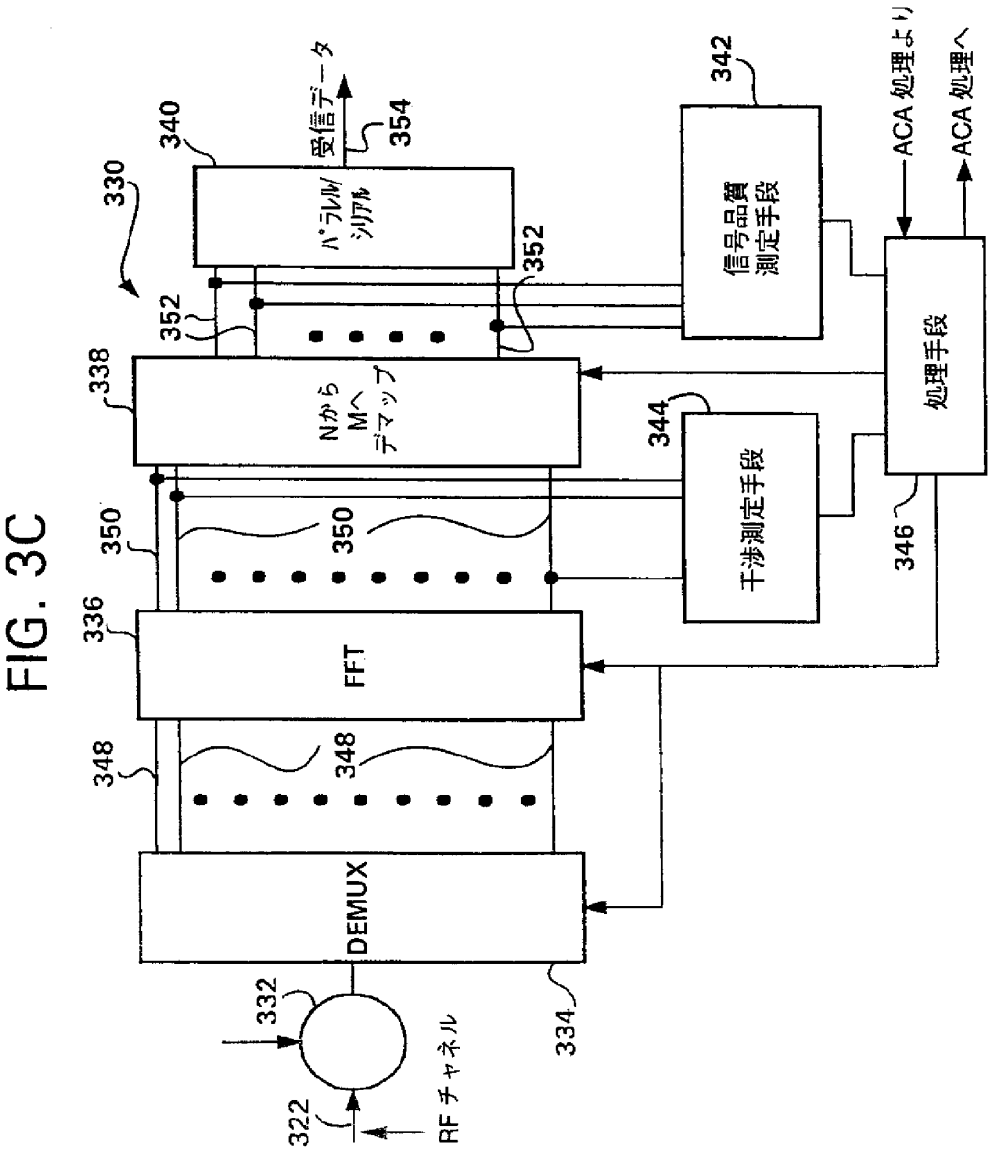
330
340
パラレル/シリアル
受信データ
354
352
342
信号品質測定手段
ACA 処理より
ACA 処理へ
338
Nから Mへ デマップ
344
干渉測定手段
処理手段
346
350
336
FFT
348
DEMUX
332
334
322
RF チャネル

【図４】

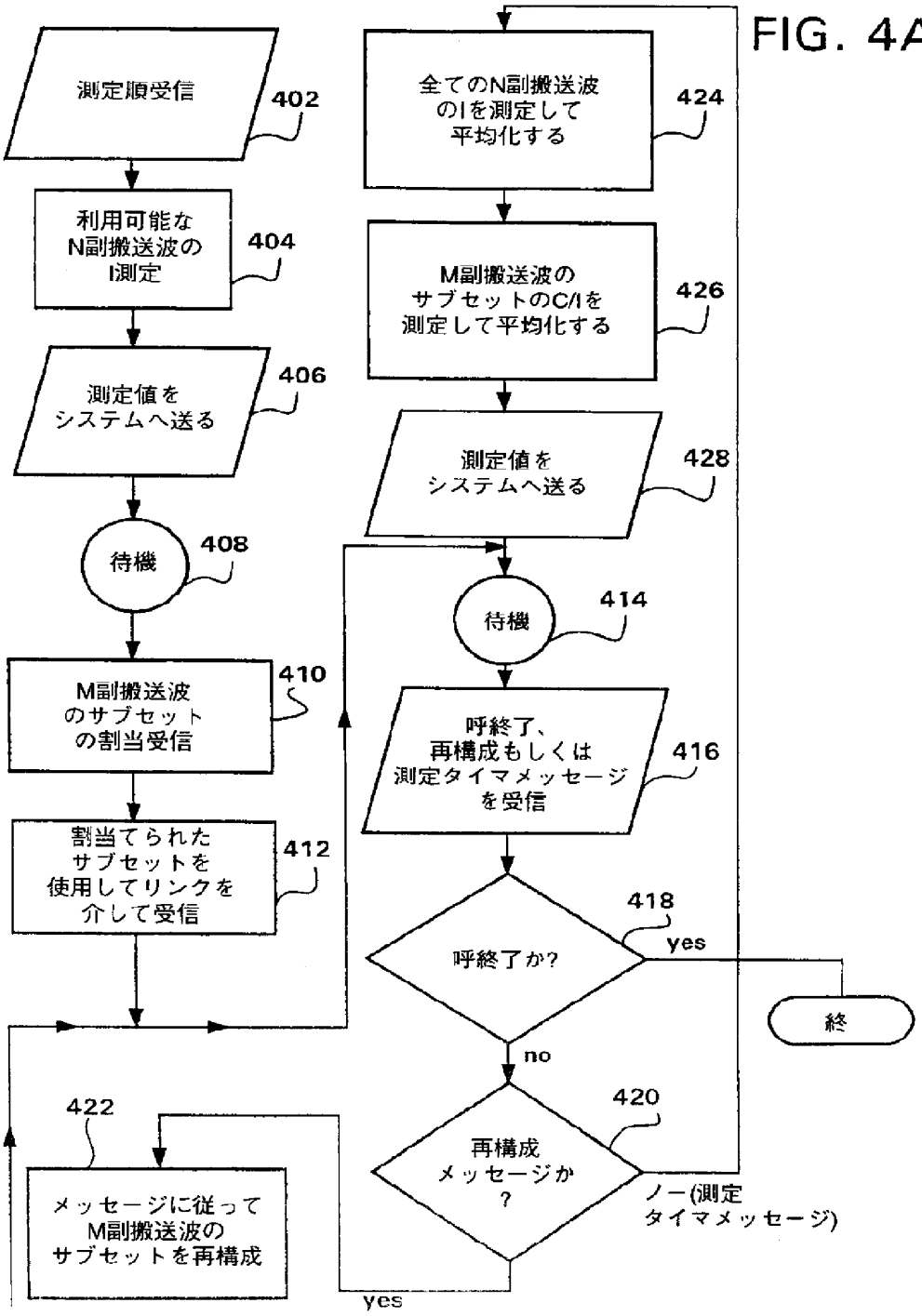
測定順受信
402
利用可能な
N副搬送波の
I測定
404
測定値を
システムへ送る
406
待機
408
M副搬送波
のサブセット
の割当受信
410
割当てられた
サブセットを
使用してリンクを
介して受信
412
422
メッセージに従って
M副搬送波の
サブセットを再構成
全てのN副搬送波
のIを測定して
平均化する
424
M副搬送波の
サブセットのC/Iを
測定して平均化する
426
測定値を
システムへ送る
428
待機
414
呼終了、
再構成もしくは
測定タイマメッセージ
を受信
416
呼終了か?
418
yes
終
no
再構成
メッセージか
?
420
ノー(測定
タイマメッセージ)
yes

FIG. 4A

【図４】

FIG. 4B

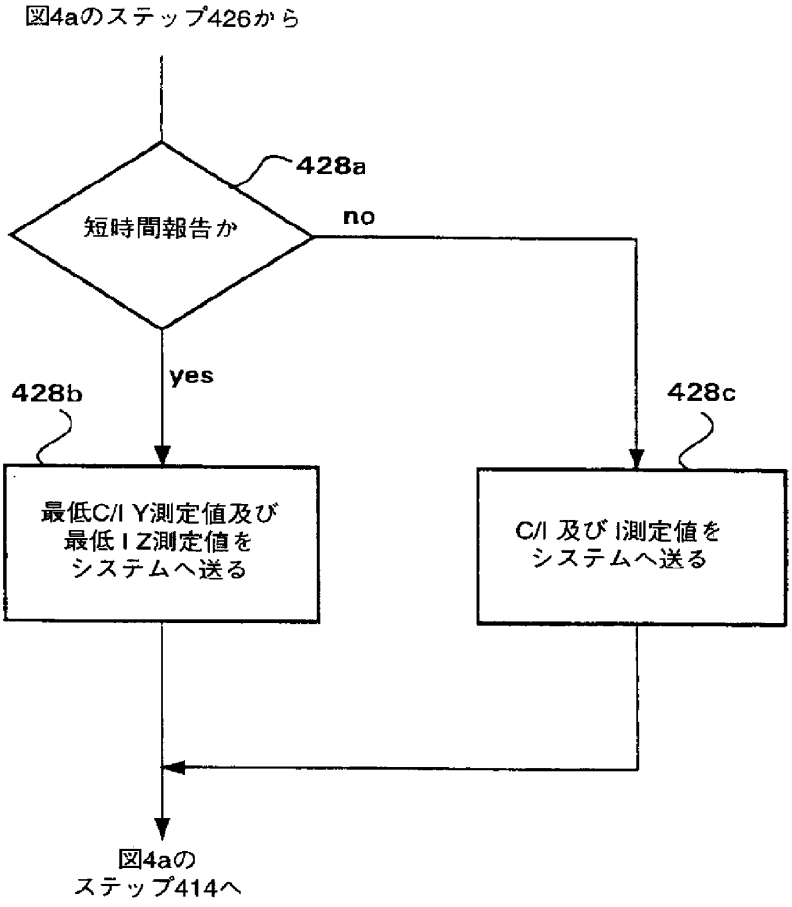
図4aのステップ426から
428a
短時間報告か
no
yes
428b
428c
最低C/I Y測定値及び
最低I Z測定値を
システムへ送る
C/I 及びI測定値を
システムへ送る
図4aの
ステップ414へ

【図５】

FIG. 5

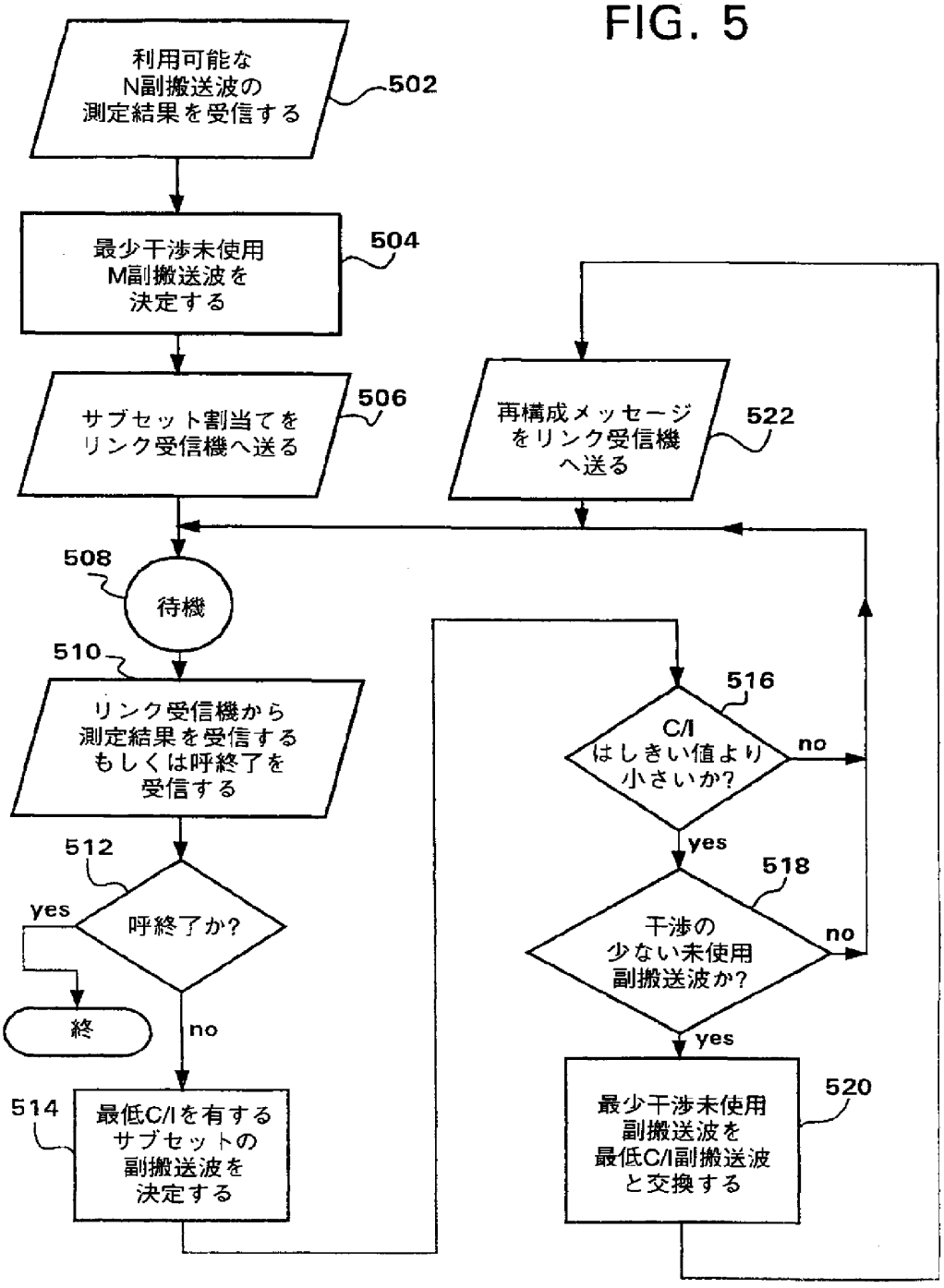
利用可能な
N副搬送波の
測定結果を受信する
502
最少干渉未使用
M副搬送波を
決定する
504
サブセット割当てを
リンク受信機へ送る
506
再構成メッセージ
をリンク受信機
へ送る
522
508
待機
510
リンク受信機から
測定結果を受信する
もしくは呼終了を
受信する
512
呼終了か?
yes
終
no
514
最低C/Iを有する
サブセットの
副搬送波を
決定する
516
C/I
はしきい値より
小さいか?
no
yes
518
干渉の
少ない未使用
副搬送波か?
no
yes
520
最少干渉未使用
副搬送波を
最低C/I副搬送波
と交換する

【図６】

FIG. 6A

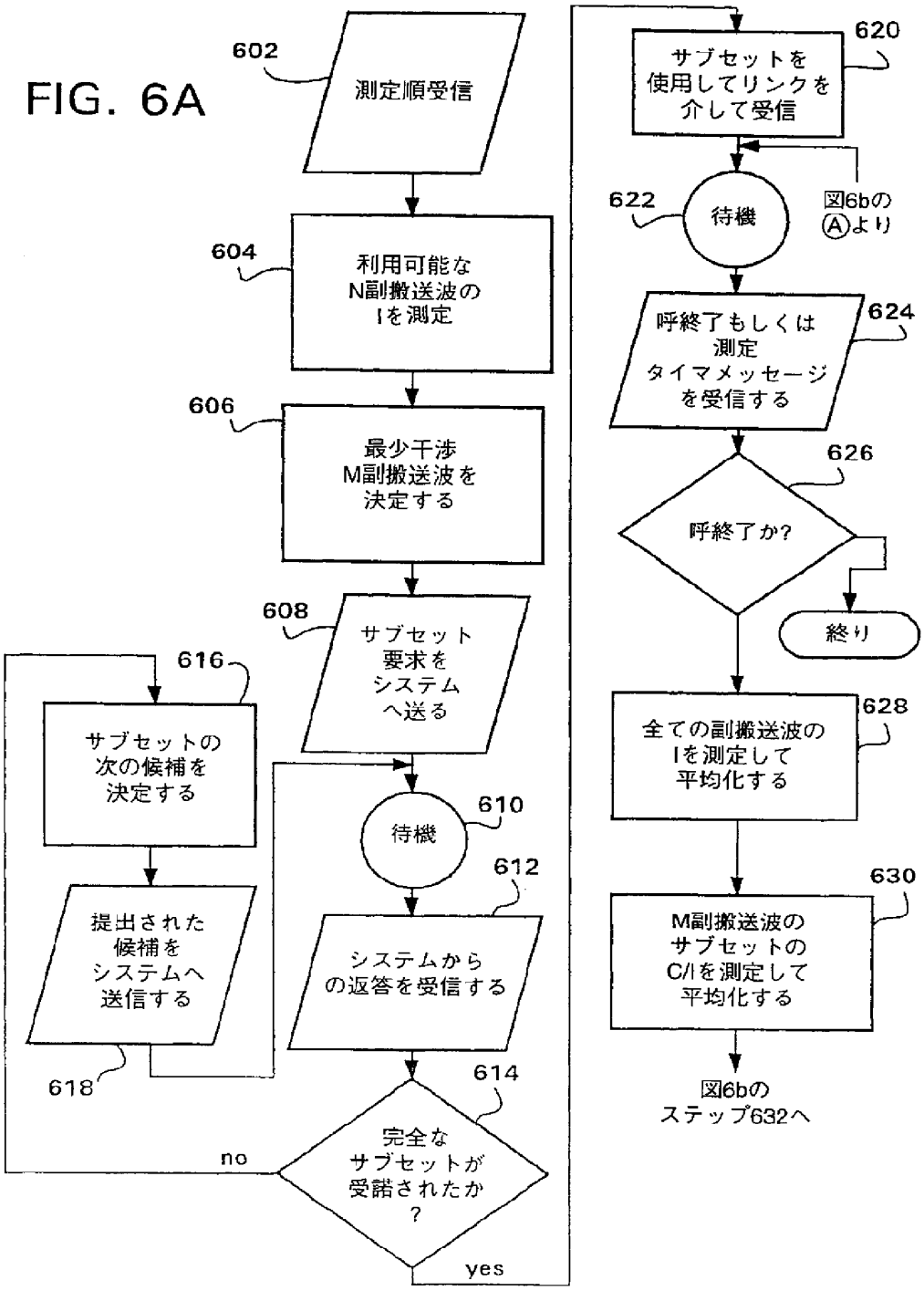
602
測定順受信
604
利用可能な
N副搬送波の
Iを測定
606
最少干渉
M副搬送波を
決定する
608
サブセット
要求を
システム
へ送る
610
待機
612
システムから
の返答を受信する
614
完全な
サブセットが
受諾されたか
?
no
yes
616
サブセットの
次の候補を
決定する
618
提出された
候補を
システムへ
送信する
620
サブセットを
使用してリンクを
介して受信
622
待機
図6bの
Ⓐより
624
呼終了もしくは
測定
タイマメッセージ
を受信する
626
呼終了か?
終り
628
全ての副搬送波の
Iを測定して
平均化する
630
M副搬送波の
サブセットの
C/Iを測定して
平均化する
図6bの
ステップ632へ

【図６】

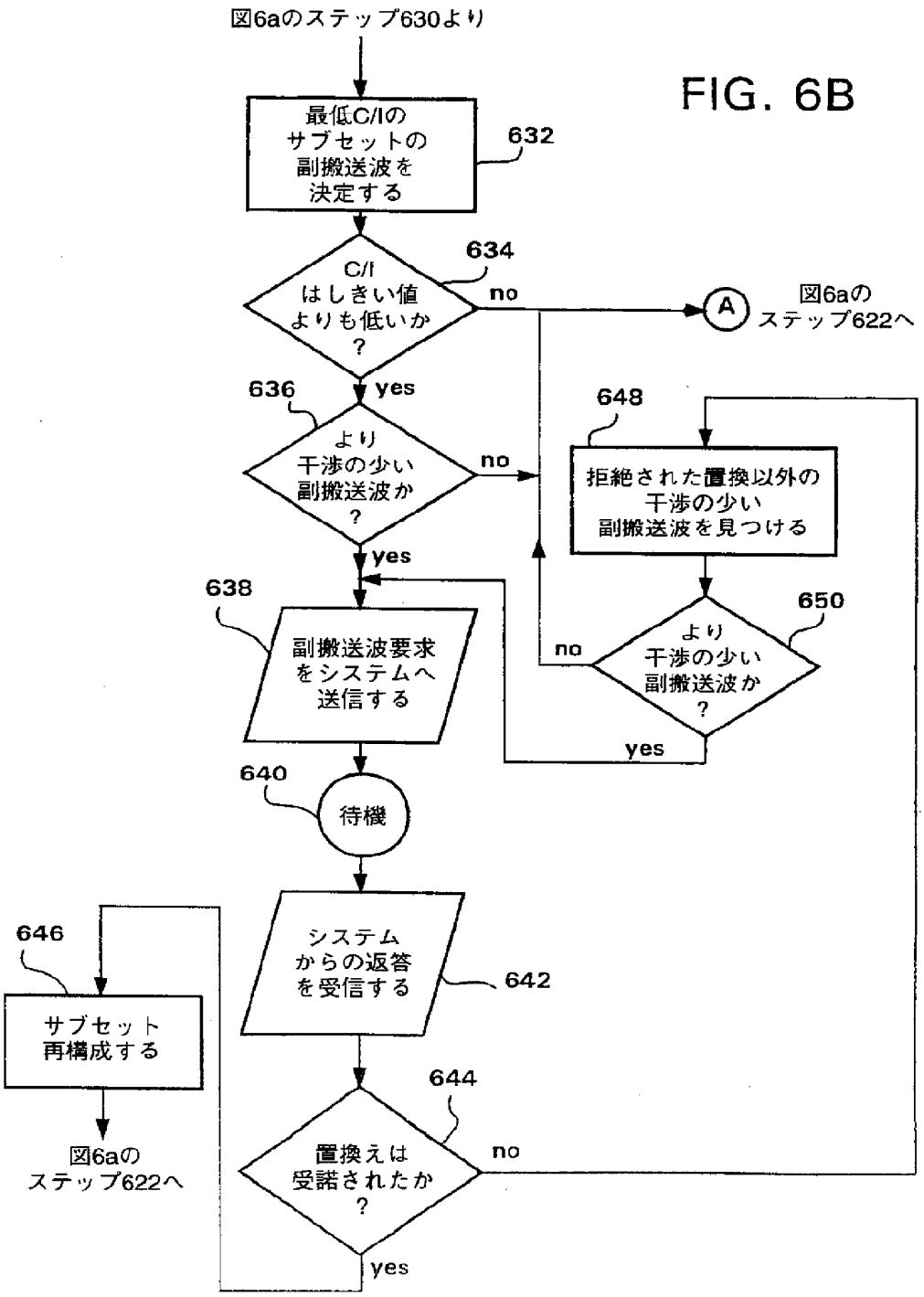
図6aのステップ630より
最低C/Iのサブセットの副搬送波を決定する
632
C/I はしきい値よりも低いか？
634
no
A
図6aのステップ622へ
yes
636
より干渉の少い副搬送波か？
no
yes
638
副搬送波要求をシステムへ送信する
640
待機
システムからの返答を受信する
642
644
置換えは受諾されたか？
no
yes
646
サブセット再構成する
図6aのステップ622へ
648
拒絶された置換以外の干渉の少い副搬送波を見つける
650
より干渉の少い副搬送波か？
no
yes

FIG. 6B

【図７】

FIG. 7

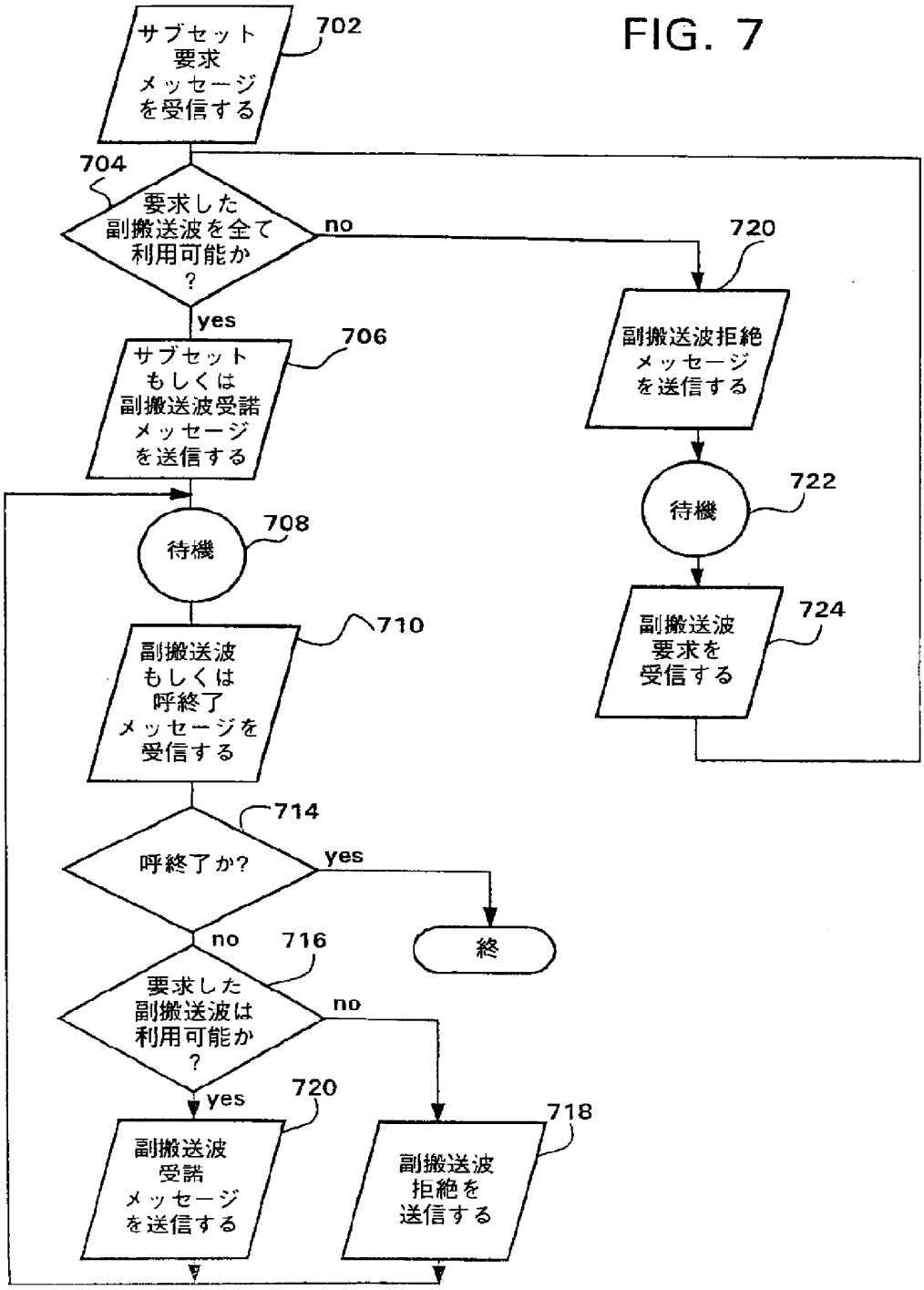
サブセット要求メッセージを受信する
702
704
要求した副搬送波を全て利用可能か？
no
720
副搬送波拒絶メッセージを送信する
yes
706
サブセットもしくは副搬送波受諾メッセージを送信する
待機
722
708
副搬送波要求を受信する
724
副搬送波もしくは呼終了メッセージを受信する
710
714
呼終了か?
yes
終
no
716
要求した副搬送波は利用可能か？
no
yes
720
副搬送波受諾メッセージを送信する
718
副搬送波拒絶を送信する

【国際調査報告】

INTERNATIONAL SEARCH REPORT

Internal Application No
PCT/SE 96/00814

A. CLASSIFICATION OF SUBJECT MATTER
IPC 6　H04Q7/38　　H04L5/06

According to International Patent Classification (IPC) or to both national classification and IPC

B. FIELDS SEARCHED

Minimum documentation searched (classification system followed by classification symbols)
IPC 6　H04Q　H04L

Documentation searched other than minimum documentation to the extent that such documents are included in the fields searched

Electronic data base consulted during the international search (name of data base and, where practical, search terms used)

C. DOCUMENTS CONSIDERED TO BE RELEVANT

Category *	Citation of document, with indication, where appropriate, of the relevant passages	Relevant to claim No.
X	WO,A,95 10144 (TELIA AB ;ENGSTROEM BO (SE); LARSSON ROGER (SE)) 13 April 1995 see the whole document ---	1-10, 14-23
A	US,A,5 295 138 (GREENBERG A FREDERICK ET AL) 15 March 1994 see claims ---	1-26
A	US,A,5 400 322 (HUNT RONALD R ET AL) 21 March 1995 see column 1, line 31 - column 3, line 63 ---	1-5, 8-10, 14-18, 21-23
A	EP,A,0 637 181 (SIEMENS AG) 1 February 1995 see the whole document --- -/--	1-5, 14-18

[X] Further documents are listed in the continuation of box C.　　[X] Patent family members are listed in annex.

* Special categories of cited documents :

"A" document defining the general state of the art which is not considered to be of particular relevance
"E" earlier document but published on or after the international filing date
"L" document which may throw doubts on priority claim(s) or which is cited to establish the publication date of another citation or other special reason (as specified)
"O" document referring to an oral disclosure, use, exhibition or other means
"P" document published prior to the international filing date but later than the priority date claimed

"T" later document published after the international filing date or priority date and not in conflict with the application but cited to understand the principle or theory underlying the invention
"X" document of particular relevance; the claimed invention cannot be considered novel or cannot be considered to involve an inventive step when the document is taken alone
"Y" document of particular relevance; the claimed invention cannot be considered to involve an inventive step when the document is combined with one or more other such documents, such combination being obvious to a person skilled in the art.
"&" document member of the same patent family

Date of the actual completion of the international search	Date of mailing of the international search report
22 October 1996	12. 11. 96
Name and mailing address of the ISA European Patent Office, P.B. 5818 Patentlaan 2 NL - 2280 HV Rijswijk Tel. (+31-70) 340-2040, Tx. 31 651 epo nl, Fax (+31-70) 340-3016	Authorized officer Janyszek, J-M

Form PCT/ISA/210 (second sheet) (July 1992)

INTERNATIONAL SEARCH REPORT

Interna[illegible]nal Application No
PCT/SE 96/00814

C.(Continuation) DOCUMENTS CONSIDERED TO BE RELEVANT

Category *	Citation of document, with indication, where appropriate, of the relevant passages	Relevant to claim No.
A	ELECTRONICS LETTERS, 27 OCT. 1994, UK, vol. 30, no. 22, ISSN 0013-5194, pages 1831-1832, XP000490811 CHAN C -K ET AL: "Efficient frequency assignment scheme for intermodulation distortion reduction in fibre-optic microcellular systems" see the whole document ---	1-7, 14-18,20
A	EP,A,0 490 509 (NORTHERN TELECOM LTD) 17 June 1992 see the whole document -----	1-8, 14-22

Form PCT/ISA/210 (continuation of second sheet) (July 1992)

INTERNATIONAL SEARCH REPORT

ormaaon on patent family members

Internat onal Application No
PCT/SE 96/00814

Patent document cited in search report	Publication date	Patent family member(s)		Publication date
WO-A-9510144	13-04-95	SE-C-	503548	01-07-96
		EP-A-	0721705	17-07-96
		SE-A-	9303213	02-04-95
US-A-5295138	15-03-94	NONE		
US-A-5400322	21-03-95	NONE		
EP-A-0637181	01-02-95	DE-A-	4326190	02-02-95
		FI-A-	943525	28-01-95
EP-A-0490509	17-06-92	CA-A-	2032325	15-06-92
		US-A-	5239676	24-08-93

Form PCT/ISA/210 (patent family annex) (July 1992)

フロントページの続き

(81)指定国　　EP(AT, BE, CH, DE, DK, ES, FI, FR, GB, GR, IE, IT, LU, MC, NL, PT, SE), OA(BF, BJ, CF, CG, CI, CM, GA, GN, ML, MR, NE, SN, TD, TG), AP(KE, LS, MW, SD, SZ, UG), UA(AM, AZ, BY, KG, KZ, MD, RU, TJ, TM), AL, AM, AT, AU, AZ, BB, BG, BR, BY, CA, CH, CN, CZ, DE, DK, EE, ES, FI, GB, GE, HU, IL, IS, JP, KE, KG, KP, KR, KZ, LK, LR, LS, LT, LU, LV, MD, MG, MK, MN, MW, MX, NO, NZ, PL, PT, RO, RU, SD, SE, SG, SI, SK, TJ, TM, TR, TT, UA, UG, UZ, VN

PCT WORLD INTELLECTUAL PROPERTY ORGANIZATION
International Bureau

INTERNATIONAL APPLICATION PUBLISHED UNDER THE PATENT COOPERATION TREATY (PCT)

(51) International Patent Classification 7 : H04M 3/00 | A2

(11) International Publication Number: WO 00/64130

(43) International Publication Date: 26 October 2000 (26.10.00)

(21) International Application Number: PCT/US00/10301

(22) International Filing Date: 17 April 2000 (17.04.00)

(30) Priority Data:
09/294,563 20 April 1999 (20.04.99) US

(71) Applicant: TERADYNE, INC. [US/US]; 321 Harrison Avenue, Boston, MA 02118 (US).

(72) Inventors: RUDINSKI, Ilia, L.; 1717 W. Crystal Lane, Mount Prospect, IL 60056 (US). SCHMIDT, Kurt, E.; 6444 W. Brever Road, Burlington, WI 53105 (US).

(74) Agent: WALSH, Edmund, J.; Teradyne, Inc., 321 Harrison Avenue, Boston, MA 02118 (US).

(81) Designated States: AE, AG, AL, AM, AT, AU, AZ, BA, BB, BG, BR, BY, CA, CH, CN, CR, CU, CZ, DE, DK, DM, DZ, EE, ES, FI, GB, GD, GE, GH, GM, HR, HU, ID, IL, IN, IS, JP, KE, KG, KP, KR, KZ, LC, LK, LR, LS, LT, LU, LV, MA, MD, MG, MK, MN, MW, MX, NO, NZ, PL, PT, RO, RU, SD, SE, SG, SI, SK, SL, TJ, TM, TR, TT, TZ, UA, UG, UZ, VN, YU, ZA, ZW, ARIPO patent (GH, GM, KE, LS, MW, SD, SL, SZ, TZ, UG, ZW), Eurasian patent (AM, AZ, BY, KG, KZ, MD, RU, TJ, TM), European patent (AT, BE, CH, CY, DE, DK, ES, FI, FR, GB, GR, IE, IT, LU, MC, NL, PT, SE), OAPI patent (BF, BJ, CF, CG, CI, CM, GA, GN, GW, ML, MR, NE, SN, TD, TG).

Published
Without international search report and to be republished upon receipt of that report.

(54) Title: DETERMINING THE PHYSICAL STRUCTURE OF SUBSCRIBER LINES

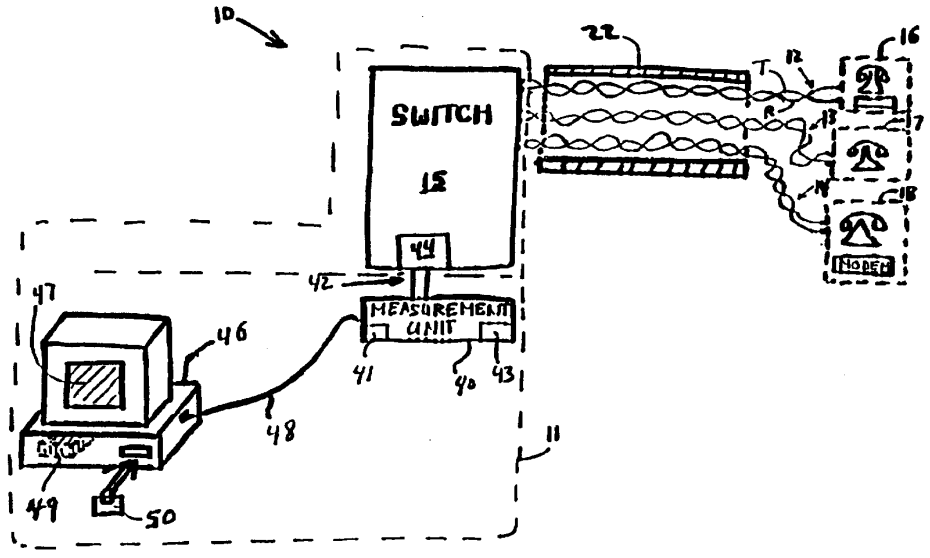

(57) Abstract

A method determines a structure of a subscriber line. The method includes searching a reference set for a match between the subscriber line and a model line of the reference set and identifying that the subscriber line has a specific physical structure. The match is based on electrical properties of the lines. The act of identifying is responsive to finding a match with one of the model lines that has the specific physical structure.

FOR THE PURPOSES OF INFORMATION ONLY

Codes used to identify States party to the PCT on the front pages of pamphlets publishing international applications under the PCT.

AL	Albania	**ES**	Spain	**LS**	Lesotho	**SI**	Slovenia
AM	Armenia	**FI**	Finland	**LT**	Lithuania	**SK**	Slovakia
AT	Austria	**FR**	France	**LU**	Luxembourg	**SN**	Senegal
AU	Australia	**GA**	Gabon	**LV**	Latvia	**SZ**	Swaziland
AZ	Azerbaijan	**GB**	United Kingdom	**MC**	Monaco	**TD**	Chad
BA	Bosnia and Herzegovina	**GE**	Georgia	**MD**	Republic of Moldova	**TG**	Togo
BB	Barbados	**GH**	Ghana	**MG**	Madagascar	**TJ**	Tajikistan
BE	Belgium	**GN**	Guinea	**MK**	The former Yugoslav Republic of Macedonia	**TM**	Turkmenistan
BF	Burkina Faso	**GR**	Greece			**TR**	Turkey
BG	Bulgaria	**HU**	Hungary	**ML**	Mali	**TT**	Trinidad and Tobago
BJ	Benin	**IE**	Ireland	**MN**	Mongolia	**UA**	Ukraine
BR	Brazil	**IL**	Israel	**MR**	Mauritania	**UG**	Uganda
BY	Belarus	**IS**	Iceland	**MW**	Malawi	**US**	United States of America
CA	Canada	**IT**	Italy	**MX**	Mexico	**UZ**	Uzbekistan
CF	Central African Republic	**JP**	Japan	**NE**	Niger	**VN**	Viet Nam
CG	Congo	**KE**	Kenya	**NL**	Netherlands	**YU**	Yugoslavia
CH	Switzerland	**KG**	Kyrgyzstan	**NO**	Norway	**ZW**	Zimbabwe
CI	Côte d'Ivoire	**KP**	Democratic People's Republic of Korea	**NZ**	New Zealand		
CM	Cameroon			**PL**	Poland		
CN	China	**KR**	Republic of Korea	**PT**	Portugal		
CU	Cuba	**KZ**	Kazakstan	**RO**	Romania		
CZ	Czech Republic	**LC**	Saint Lucia	**RU**	Russian Federation		
DE	Germany	**LI**	Liechtenstein	**SD**	Sudan		
DK	Denmark	**LK**	Sri Lanka	**SE**	Sweden		
EE	Estonia	**LR**	Liberia	**SG**	Singapore		

DETERMINING THE PHYSICAL STRUCTURE OF SUBSCRIBER LINES

This is a continuation-in-part of Application No. U.S. Application No. 09/294,563, filed April 20, 1999.

Background of the Invention

This application relates generally to communications networks, and more particularly, to determining electrical properties of multi-wire communication lines.

Recently, there has been an increased demand for the subscriber lines of plain old telephone services (POTS's) to carry high-speed digital signals. The demand has been stimulated by home access to both the Internet and distant office computers. Both types of access typically employ a POTS line as part of the path for carrying digital signals.

POTS's lines were built to carry voice signals at audible frequencies and can also carry digital signals as tone signals in the near audible frequency range. Modern digital services such as ISDN and ADSL transmit data at frequencies well above the audible range. At these higher frequencies, POTS's lines that transmit voice signals well may transmit digital signals poorly. Nevertheless, many telephone operating companies (TELCO's) would like to offer ISDN and/or ADSL data services to their subscribers.

Telephone lines between a TELCO switch and subscribers' premises are frequent sources of poor performance at the high frequencies characteristic of ISDN and ADSL transmissions. Nevertheless, high cost has made widespread replacement of these subscriber lines an undesirable solution for providing subscribers with lines capable of supporting ISDN and ADSL. A less expensive

alternative would be to repair or remove only those subscriber lines that are inadequate for transmitting high-speed digital data.

To limit replacement or repair to inadequate lines, TELCO's have placed some emphasis on developing methods for predicting which subscriber lines will support data services, such as ISDN and ADSL. Some emphasis has been also placed on predicting frequency ranges at which such data services will be supported. Some methods have also been developed for finding faults in subscriber lines already supporting data services so that such faults can be repaired.

Current methods for predicting the ability of subscriber lines to support high-speed digital transmissions are typically not automated, labor intensive, and entail test access at multiple points. Often, these methods entail using skilled interpretations of high frequency measurements of line parameters to determine data transmission abilities. At a network scale, such tests are very expensive to implement.

The present invention is directed to overcoming or, at least, reducing the affects of one or more of the problems set forth above.

Summary of the Invention

In a first aspect, the invention provides a method of determining a physical structure of a subscriber line. The method includes searching a reference set for a match between the subscriber line and a model line of the reference set and identifying that the subscriber line has a specific physical structure. The match is based on electrical properties of the lines. The act of identifying is responsive to finding a match with one of

the model lines that has the specific physical structure.

In a second aspect, the invention provides a method of qualifying a subscriber line for a data service. The method includes searching a reference set of model lines for a best match to a subscriber line by comparing sets of electrical properties and determining that the subscriber line has a specific physical structure. The act of determining is responsive to the best matching model line having the specific physical structure. The method also includes disqualifying the subscriber line for the data service, in part, in response to determining that the specific physical structure corresponds to a disqualified line.

In a third aspect, the invention provides a method of providing a data service. The method includes searching for a match between electrical properties of a subscriber line and a model line of a reference set and determining whether the subscriber's line is qualified for the data service. The act of determining is based in part on whether the best matching model line has one of a bridged tap and a mixture of gauges. The method also includes performing a business action in response to determining that the subscriber's line is qualified.

In a fourth aspect, the invention provides a data storage device that stores an executable program of instructions for causing a computer to perform one or more of the above-described methods.

Various embodiments use test accesses, which provide data on low frequency electrical properties of subscriber lines, to make predictions about high frequency performance.

Brief Description of the Drawings

Other features and advantages of the invention will be apparent from the following description taken together with the drawings in which:

FIG. 1 shows a portion of a POTS network having a system for detecting faults in subscriber telephone lines;

FIG. 2A shows a first measuring setup for making one-ended electrical measurements on a subscriber telephone line;

FIG. 2B is an equivalent circuit for the measuring setup of FIG. 2A;

FIG. 2C shows a second measuring setup for making one-ended electrical measurements on a subscriber telephone line;

FIG. 3 illustrates signal distortions produced by the test bus and standard voice test access;

FIG. 4 shows a split pair fault in a subscriber line;

FIG. 5 shows how a splice error can produce a split pair fault;

FIG. 6A shows a phase measurement signature of a resistive imbalance on a subscriber line;

FIG. 6B shows a phase measurement signature of a split pair fault on a subscriber line;

FIG. 7 is a flow chart illustrating a method of detecting faults on subscriber lines with the system of FIGs. 1, 4, and 5;

FIG. 8 is a flow chart illustrating a method of qualifying subscriber lines with the method of FIG. 7;

FIG. 9 shows a method of providing high speed data services using the methods of FIGs. 7 and 8;

FIG. 10A-10E show exemplary subscriber lines having different gauge mixes;

FIG. 11 shows a subscriber line with a bridged tap;

FIG. 12A-12E shows exemplary structures of subscriber lines having one bridged tap;

FIG. 13 is a flow chart for a method of determining the specific physical structure of a subscriber line from a reference set;

FIG. 14 is a flow chart for a method of finding a best match between a subscriber and model lines;

FIG. 15 is a flow chart for a method of qualifying subscriber lines; and

FIG. 16 is a flow chart for a business method of providing high-speed data services to subscribers.

FIG. 17 is a flow chart for a stacked method of detecting bridged taps using auxiliary variables;

FIG. 18A shows predicted and actual signal attenuations of nominal subscriber lines;

FIG. 18B shows predicted and actual signal attenuations of non-nominal subscriber lines;

FIG. 18C shows predicted, shifted predicted, and actual signal attenuations for an exemplary nominal subscriber line;

FIG. 19 shows an exemplary decision tree;

FIG. 20 illustrates the action of the rules of the decision tree of FIG. 19 on a set of subscriber lines;

FIG. 21 is a flow chart illustrating a method of creating the decision trees with machine learning methods; and

FIG. 22 is a flow chart for a method of determining the branching rules of the decision tree illustrated in FIGs. 19-20.

Description of the Preferred Embodiments

MEASUREMENT AND TEST APPARATUS

FIG. 1 shows a portion of a POTS network 10 that has a system 11 for detecting faults in subscriber lines 12-

14. The subscriber lines 12-14 connect subscriber units 16-18, i.e., modems and/or telephones, to a telephony switch 15. The switch 15 connects the subscriber lines 12-14 to the remainder of the telephone network 10. The switch 15 may be a POTS switch or another device, e.g., a digital subscriber loop access multiplexer (DSLAM).

Each subscriber line 12-14 consists of a standard twisted two-wire telephone line adapted to voice transmissions. The two wires are generally referred to as the ring AR@ and tip AT@ wires.

A large portion of each subscriber line 12-14 is housed in one or more standard telephone cables 22. The cable 22 carries many subscriber lines 12-14, e.g., more than a dozen, in a closely packed configuration. The close packing creates an electrical environment that changes transmission properties of the individual subscriber lines 12-14.

Electrical measurements for detecting line faults are performed by a measurement unit 40. In various embodiments, the measurement unit 40 includes one or both devices 41 and 43. Each device 41, 43 performs one-ended electrical measurements on selected lines 12-14. In preferred embodiments, the electrical measurements are one-ended. The device 41 performs measurements on tip and ring wires of a selected subscriber line 12-14 in a common mode configuration and produces results useful for detecting split pairs. The device 43 can measure admittances of the tip and ring wires of a selected line 12-14 either separately or together and produces data useful for determining the specific physical line structure. The measurement unit 40 may also house other devices (not shown) for performing other types of electrical measurements, i.e., one-ended or two-ended measurements. The measurement unit 40 couples to the

switch 15 via a test bus 42.

The devices 41, 43 connect to the switch 15 through the test bus 42 and a standard voice test access 44. The voice test access 44 electrically connects either the device 41 or device 43 to the subscriber lines 12-14 selected for testing. The voice test access 44 generally transmits electrical signals with low frequencies between about 100 Hertz (Hz) and 20 kilo Hz (KHz). But, the test access 44 may transmit signals at higher frequencies, e.g., up to 100 to 300 KHz, in some switches 15.

The measurement unit 40 is controlled by computer 46, which selects the types of measurements performed, the device 41, 43 used, and the subscriber lines 12-14 to test. The computer 46 sends control signals to the measurement unit 40 via a connection 48, e.g., a line, network, or dedicated wire, and receives measurement results from the measurement unit 40 via the same connection 48.

The computer 46 contains a software program for controlling line testing by the measurement unit 40 and for detecting line conditions or faults with results from the measurement unit 40. The software program is stored, in executable form, in a data storage device 49, e.g., a hard drive or random access memory (RAM). The program may also be encoded on a readable storage medium 50, such as an optical or magnetic disk, from which the program can be executed.

To perform a test, the measurement unit 40 signals the voice test access 44 to connect the line 12-14 to be tested to wires of the bus 42 for connecting to internal devices 41, 43. Then, one or both of the internal devices 41, 43 performs electrical measurements on the selected line 12-14. After the measurements are completed, the measurement unit 40 signals the switch 15 to disconnect

the line 12-14 from the wires of the bus 42.

The computer 46 can classify selected subscriber lines 12-14 prior to fully connecting the lines 12-14 for data services. The range of possible classes to which a line 12-14 can be assigned will depend on the business needs of a TELCO. A simple, but very useful set of classes is "qualified" and "disqualified" to provide data services. Qualification is based on determining, with high certainty, that a selected line 12-14 will support a specified data service. Disqualification is based on determining, with high certainty, that the selected line 12-14 will not support the specified data service.

FIG. 2A shows a first setup 52 for performing one type of one-ended electrical measurements with the device 41. The measurements are used to detect faults such as split pairs in the subscriber lines 12-14 of FIG. 1.

The device 41 has a variable frequency voltage source 54 for driving the tip and ring wires T, R of the subscriber line 12-14 under test. The voltage source drives both wires together, i.e., in a common mode configuration, at a frequency controlled by the measurement unit 40. The tip and ring wires T, R of the line 12-14 under test are connected to the device 41 via the voice test access 44.

The voltage source 54 connects to one side of resistors R_1 and R_2. The second side of resistors R_1 and R_2 connect to the respective tip and ring wires T, R of the subscriber line 12-14 under test. Thus, the voltage source 54 drives the tip and ring wires T, R in common mode through the corresponding resistors R_1 and R_2.

The resistors R_1 and R_2 have equal resistances so that the voltage source 54 induces equal voltages V_1, V_2 between each resistor R_1, R_2 and ground if the currents I_T, I_R therein are also equal. Differences in the input

impedances Z_T, Z_R of the tip and ring wires T, R make the voltages V_1, V_2 differ in amplitude and/or phase. For example, mutual inductance effects produced by a split pair can make the input impedances Z_T, Z_R unequal.

Voltmeters VM_1 and VM_2 measure amplitudes and phases of voltages V_1 and V_2, respectively. From measurements of the voltmeters VM_1 and VM_2, the computer 46 can obtain the phase difference between V_1 and V_2.

FIG. 2B shows an equivalent circuit 55 for the measurement setup 52 of FIG. 4. In the common mode configuration, the tip and ring wires T, R act as elements of independent circuits 56, 57 that connect the voltage source 54 to a common ground 58. The tip wire T is equivalent to an impedance Z_T in the circuit 56, and the ring wire R is equivalent to an impedance Z_R in the circuit 57.

The input impedances Z_T and Z_R may have different amplitudes and/or phases due to the presence of a fault on either the tip or ring wires T, R. Different values for Z_T and Z_R produce different currents I_T and I_R in the circuits 56 and 57 and different measured voltages V_1 and V_2. The phase of the voltage difference $V_1 - V_2$ is proportional to the phase difference between the input impedances of the tip and ring wires T, R. In the phase of the difference $V_1 - V_2$, termination effects associated with the attached subscriber unit 16 can largely be ignored.

FIG. 2C shows a measuring setup 60 for performing one-ended electrical measurements on a selected subscriber line 12-14 with the device 43 shown in FIG 1. The device 43 measures electrical properties, which can be used to determine the specific physical structure of the lines 12-14 and to determine line conditions and faults as is described below. Some methods for detecting line faults and conditions with the device 43 have been described in

U.S. Application No. 09/294,563 ('563), filed April 20, 1999. The '563 application is incorporated herein, by reference, in its entirety.

The device 43 is adapted to measure admittances between the tip wire T, ring wire R, and ground G for a subscriber line 12-14 being tested. The tip and ring wires T, R of the line 12-14 being tested couple to driving voltages V_1' and V_2' through known conductances G_t and G_r. The tip and ring wires T, R also connect to voltmeters V_t and V_r. The V_t and V_r voltmeters read the voltage between the tip wire T and ground G and between the ring wire R and ground G, respectively. The readings from the voltmeters V_t and V_r enable the computer 46 to determine three admittances Y_{tg}, Y_{tr}, and Y_{rg} between the pairs tip-ground, tip-ring, and ring-ground, respectively. The device 43 can measure the admittances at preselected frequencies in the range supported by the voice test access 44. The '563 application has described methods for performing such measurements.

Referring to FIG. 3, the computer 46 may compensate for signal distortions introduced by the test bus 42 and/or the voice test access 44. To perform compensation, the computer 46 treats the two lines of the combined bus 42 and test access 44 as a linear two port systems. Then, the currents and voltages I_T', V_T' and I_R', V_R' at the output terminals of the measurement device 40 are related to the currents and voltages I_T, V_T and I_R, V_R on the output terminals of the tip and ring wires T, R by the following 2x2 matrix equations:

$[I_T, V_T] = A(f)\ [I_T', V_T']^t$ and $[I_T, V_T] = A'(f)\ [I_R', V_R']^t$.

The frequency dependent matrices A(f) and A'(f) are determined experimentally for each bus 42 and voice test access 44. Then, the computer 46 calculates the impedances or admittances of the tip and ring wires T, R

with the currents and voltages I_T, V_T and I_R, V_R obtained from the above equations.

The measurement unit 40 and computer 46 can detect faults such as split pairs, resistive imbalances, metallic faults, load coils, bridged taps, gauge mixtures, and high signal attenuations. Co-pending U.S. Patent Application 09/285,954 ('954), filed April 2, 1999, describes the detection of some of these faults and is incorporated herein by reference in its entirety.

SPLIT PAIRS

Referring again to FIG. 1, close proximity can inductively produce cross talk between the subscriber lines 12-14. Cross talk is frequently caused by large noise or ringing signals on one of the lines 12-14. The large signal inductively produces signals on nearby lines 12-14. To reduce cross talk, the tip and ring wires T, R of each subscriber line 12-14 are either tightly twisted together or kept in close proximity in the cable 22. In this way, stray signals affect both wires of a pair so that induced signals do not impact the difference signal between the tip and ring wires.

Referring to FIG. 4, the tip and ring wires T', R' of a subscriber line 24 are separated spatially in a portion of cable 26. The portion of the subscriber line 24 in which the tip and ring wires T', R' are spatially separated is referred to as a split pair. A split pair T', R' has a high risk of picking up cross talk other lines 28-29 in the same cable 26 or external noise sources such as power lines (not shown).

Split pairs also introduce impedance discontinuities into subscriber lines, because the split pair creates a localized and abrupt impedance variation. Impedance discontinuities can cause signal reflections and high

signal attenuations for high-speed digital transmissions.

FIG. 5 illustrates one type of split pair, i.e., a split pair caused by a splice error. The splice error occurred when two portions of a subscriber line 32, which are located in two different cables 33, 34, were joined. The splice 35 has joined tip and ring wires T_1, R_2 from two different twisted pair lines 36, 37 in the cable 33 to tip and ring wires T_3, R_3 of a single twisted pair 38 in the adjacent cable 34. The tip and ring wires T_1, R_2 of the portion of the subscriber line 32 are widely separated in a substantial portion of the cable 33. Thus, the tip and ring wires T_1, R_2 form a split pair.

Detection of split pair faults is difficult for several reasons. First, split pairs do not produce easily detected effects such as metallic faults, i.e., broken wires or shorted wires, or impedance imbalances. Second, split pairs produce cross talk that produce intermittent faults depending on the signals on nearby lines, e.g., intermittent ringing signals. The intermittency makes such faults difficult to recognize.

Conventional tests have not been very successful in detecting split pairs. Nevertheless, split pairs can degrade the quality of a subscriber line for high-speed data services.

FIG. 6A and 6B provide graphs 68, 69 of the phase of the voltage difference $V_1 - V_2$ between resistors R_1 and R_2 while testing two exemplary subscriber lines 12-14 with the measurement setup 52 of FIG. 4. The graphs 68, 69 provide frequency sweeps of the phase difference, which show signatures of faults that can interfere with high-speed data services, e.g., ISDN or ADSL.

Referring to FIG. 6A, the graph 68 shows a signature for a resistive imbalance fault on the tested subscriber line 12-14. The signature for a resistive imbalance is a

pronounced peak in the phase of the voltage difference $V_1 - V_2$. The peak appears in the phase difference between impedances of the tip and ring wires. The peak has a narrow width that is typically not more than a few hundred to about 2 KHz. Typically, the phase has a height of greater than about 5°.

Referring to FIG. 6B, the graph 69 shows a signature for a split pair fault on the tested subscriber line 12-14. The signature is a flat and substantially constant phase for $V_1 - V_2$, i.e., a substantially constant non-zero phase difference between the input impedances Z_T, Z_R of the wires T, R. Typically, the phase has a value of between about .5° and 1.5°. The nonzero and flat phase extends over a region of frequencies having a width of at least 5,000 kilo Hz. The phase of Z_T and Z_R may remain flat, nonzero, and peakless from about 100 Hz to about 20,000 Hz if a split pair is present, i.e., over the frequency range measurable through the voice test access 44, shown in FIG. 1. A nonzero and substantially frequency independent phase difference between the input impedances Z_T, Z_R of the tip and ring wires is a signature for a split pair on the subscriber line 12-14 being tested.

FIG. 7 is a flow chart illustrating a method 70 of detecting a fault in the subscriber lines 12-14 with the system 11 of FIG. 1. The computer 46 selects the subscriber line 12-14 to test for faults (step 72). The measurement unit 40 electrically connects to the selected line 12-14 via the voice test access 44 of the TELCO switch 15 (step 74). The connection produces the measurement setup 52 illustrated in FIGs. 4 and 5.

The measurement unit 40 performs one-ended electrical measurements to determine a signal proportional to the phase difference of the input impedances Z_T, Z_R of the tip

and ring wires of the selected line 12-14 (step 76). The quantity actually measured is the phase of $V_1 - V_2$, which is proportional to the phase of the difference of the input impedances Z_T, Z_R. The device 41 measures the phase by driving the tip and ring wires in the common mode configuration shown in FIG. 4. The driving frequencies are between about 100 Hz to 20,000 kilo Hz and accessible via the voice test access 44. Such frequencies are very low compared to transmission frequencies of high-speed data services such as ISDN and ADSL.

The computer 46 analyzes the measurements of the phase as a function of frequency to determine whether the phase has a signature for a line fault (step 78). The line faults that produce signatures in the phase include split pairs and resistance imbalances as described above in relation to FIGs. 6B and 6A, respectively. Other signatures are possible, e.g., for other types of faults. If a signature for a line fault is found, the computer 46 identifies that a fault has been detected (step 80). The identification may entail making a reporting act. The reporting act may include making an entry in a file that lists the faults on the subscriber lines 12-14, displaying a warning on an operator's display screen 47 or on a screen of a service technician (not show), or informing a program that allocates subscriber lines 12-14. If no signatures for line faults are found, the computer 46 identifies the absence of the line faults associated with signatures for the selected line 12-14, e.g., by performing a reporting act (step 82).

FIG. 8 is a flow chart illustrating a method 90 for a test that determines whether the subscriber lines 12-14 of FIG. 1 qualify or disqualify for a high-speed data service. To start a test, an operator or the computer 46 selects a subscriber line 12-14 (step 92). The operator

or computer 46 also selects the type of data service for which the selected subscriber line 12-14 is to be tested (step 94). For example, the types of service may be ISDN or ADSL. After selecting the line 12-14 and service type, the measurement unit 40 performs one-ended electrical measurements to detect preselected types of faults in the selected line 12-14 (step 96). The one-ended measurements include tests according to the method 70 of FIG. 7 to detect split pairs.

The other types of line faults and conditions, which are selected for testing, depend on the types and speeds of data services, the properties of the switch 15, and the type of modem to be used. Frequently, tests check for high signal attenuations, resistive imbalances, and the presence of load coils, metallic faults, or bridged taps, because these conditions and faults can disqualify a line for high-speed data service. But, line qualification tests may also check for capacitive imbalances, and above-threshold noise levels, because these conditions can also affect qualification results. Methods and apparatus for detecting some of these conditions and faults are described in co-pending patent applications.

One such application is U.K. Patent Application No. 9914702.7, titled "Qualifying Telephone Lines for Data Transmission", by Roger Faulkner, filed June 23, 1999, which is incorporated herein by reference, in its entirety. Other such co-pending applications include the above-mentioned '954 and '563 patent applications.

If one of the preselected types of faults or line conditions is detected, the computer 46 reports that the selected subscriber line 12-14 is disqualified for the selected data transmissions (step 98). Otherwise, the computer 46 reports that the selected line 12-14 qualifies for the selected data service (step 100).

To report the tested line's status, the computer 46 makes an entry in a list stored in the storage device 49. The list identifies the line, data service, and qualification or disqualification status. The computer 46 may also report the line's status by displaying a disqualification or qualification signal on the display screen 47 visible to an operator.

FIG. 9 is a flow chart for a method 101 used by a TELCO to provide a high-speed data service, e.g., ISDN or ADSL, to telephone subscribers. The TELCO programs the computer 46 of FIG. 1 to automatically select individual subscriber lines 12-14 connected to the local switch 15 (step 102). In response to selecting the line 12-14, the voice test access 44 connects the selected line 12-14 to the measurement unit 40 for testing (step 104). The measurement unit 40 connects the selected line 12-14 to the measurement device 41 and may also connect the selected line 12-14 to other internal measurement devices (not shown). The computer 46 and measurement unit 40 determine whether the selected line 12-14 has a split pair and qualifies for the data service according to the methods 70, 90 of FIGs. 7 and 8 (step 106). Next, the computer 46 updates a list recording the identities of lines 12-14 that qualify and of lines 12-14 having split pairs (step 108). The computer 46 waits a preselected time and restarts the testing for another of the lines 12-14 at step 102.

The TELCO regularly checks the list to determine whether any of the lines 12-14 have split pairs (step 110). If a line has a split pair, the TELCO performs a business action based on the presence of the split pair fault (step 112). The business action may include sending a worker to repair or replace the affected line 12-14, designating the affected line 12-14 as unable to transmit

data, or setting a lower billing rate based on the presence of the fault.

The TELCO also regularly checks the list to determine whether any of the lines 12-14 qualify for the high-speed data service (step 114). In response to finding that one or more of the lines 12-14 qualify, the TELCO performs a business action related to the line's qualification (step 116). For example, the TELCO may offer the high speed data service to subscribers who have the lines 12-14 qualified for the data service and who do not presently subscribe to the data service.

SPECIFIC PHYSICAL STRUCTURE OF SUBSCRIBER LINES

Referring again to FIG. 1, the subscriber lines 12-14 may have widely different physical structures. A line's specific physical structure is described by properties such as line length, gauge or gauges, and content of bridge taps. Interpretations of electrical measurements to obtain line transmission properties such as the signal attenuation are dependent upon the specific physical line structure. Thus, knowing the specific physical structure of a subscriber line aids in predicting how well the line 12-14 will support high speed digital data services, e.g., to predict maximum data speeds.

FIGs. 10A-E illustrate parameters that describe gauge mix parameters through exemplary lines 121-125 in which drawing widths represent wire gauges. The lines 121, 122 have uniform structures described by different wire gauges. The lines 124, 125 have segmented structures in which adjacent segments have different wire gauges, i.e., mixtures of gauges. The gauge composition of these lines 124, 125 is described by segment lengths and segment gauges. The structures are also described by the serial layout of the segments. The line 123 has different tip

and ring wires T_4, R_4 and is described by the gauges of the T_4 and R_4 wires.

Referring now to FIG. 11, a subscriber line 127 has an extra twisted wire pair 128 spliced onto the line 127. The spliced on wire pair 128 is referred to as a bridged tap. The existence or absence of bridged taps is a parameter that also influences how well the subscriber line 127 will support high-speed digital data services.

In the United States, many subscriber lines have bridged taps because of the way in which telephone lines were laid out in housing subdivisions. Telephone lines were laid out prior to determining the exact positioning of the houses of the subdivisions. The lines ran near planned positions of several houses. When the houses were later built, the builder connected the telephone units to the nearest point on one of the originally laid telephone lines. Unconnected portions of the original lines produced bridged taps.

The bridged tap 128 reflects signals from termination 129. The reflected signals then travel back to the subscriber line 127 and interfere with signals on the subscriber line 127. The most harmful interference occurs when the reflected signal is out of phase with the incoming signal. In such a case, the reflected signal destructively interferes with the incoming signal on the subscriber line 127.

The length of the bridged tap 128 determines the phase difference between the original and reflected signals. For high-speed digital signals whose frequencies extend to about 1 mega Hertz (MHz), e.g., ADSL signals, a substantial cancellation can occur if the bridged tap 128 has a length between about 200 to 700 feet. In the United States, the bridged taps left over from the construction of many housing subdivisions have lengths in this range.

Thus, the ability to detect and remove the bridged tap 128 is useful to TELCO's that want to offer high-speed digital data services to their subscribers.

FIGs. 12A-12E illustrate structure parameters that describe bridged taps 130, 134 through exemplary subscriber lines 135-139. The lines 135, 136 have bridged taps 130, 131 described by different physical lengths. The lines 137-138 have bridged taps 132, 133 described by different locations along the lines 137, 138. The line 139 has a bridged tap 134, which is at least partially described by its location along a particular segment of the line 139. Finally, the lines 136, 139 have bridged taps 131, 134 described by different gauges.

To determine the specific physical structures of unknown subscriber lines, a reference set of model lines may be employed. A reference set is an ensemble of model lines with different and known specific physical structures. To determine the specific physical structure of an unknown subscriber line, measured properties of the unknown line are compared to the same properties in model lines. If a match is found, the unknown line has the same specific physical structure as the matching model line.

Reference data on the specific physical structures of the model lines may be compiled in either a reference data file or a set of reference equations. Both the reference data file and the set of reference equations index the individual model lines by values of a preselected set of measurable electrical properties. In some embodiments, the preselected electrical properties are the frequency-dependent admittances measurable with the device 43 of FIG. 2C.

The content of model lines in the reference set may be tailored to the expected structures of the unknown subscriber lines. For example, if the unknown lines do

not have bridged taps, the reference set might not have model lines with bridged taps. On the other hand, if the unknown lines may have bridged taps, the reference set includes some model lines with bridged taps. Knowledge of the practices used to lay out the subscriber lines under test can help to determine the best content of model lines for the reference set. For different subscriber line populations, reference sets can be selected empirically or based on human knowledge.

Typically, the reference set includes model lines having uniformly varying values of the parameters described in relation to FIGs. 10A-10E and 12A-12E. The model lines have a distribution of lengths and may include one, two, or three segments with zero, one, or two bridged taps, and a distribution of subscriber termination loads. The segments and bridged taps can have varying lengths, locations, and gauges.

FIG. 13 is a flow chart for a method 140 of determining the specific physical line structure of the subscriber lines 12-14 of FIG. 1 from a reference set of model lines. To start, an operator or the computer 46 selects a subscriber line (ssl) to test (step 142). The computer 46 directs the measuring unit 40 to perform preselected one-ended electrical measurements on the selected subscriber line over a range of frequencies (step 144).

In one embodiment, the electrical measurements are one-ended and performed with the device 43, shown in FIG. 2C. During the measurements, the voltage source 54 drives the tip and/or ring wires of the selected subscriber line 12-14 with voltage sources V_1', V_2'. The driving frequency is swept over a range, e.g., from about 100 Hertz to about 20,000 to 40,000 Hertz, and one or more of the admittances Y_{tg}, Y_{tr}, Y_{rg} are measured for various driving frequencies.

The measurements provide complex input admittances, i.e., amplitudes and phases for a preselected set of frequencies "f".

After performing the measurements, the computer 46 searches for a "best" match between model lines belonging to the reference set and the selected subscriber line (step 146). The search for matches involves comparing preselected electrical properties of the selected subscriber line to the same properties for the model lines. For the selected subscriber line, the values of the preselected electrical properties are obtained from the one-ended electrical measurements. For the model lines, the values of the same electrical properties are either looked up from a file in the data storage device 49 or calculated from a set of reference equations. The comparison determines which model line "best" matches the selected subscriber line.

The computer 46 identifies a specific physical line structure for the selected subscriber line 12-14 has the same form as the specific physical line structure of the "best" matching model line (step 148). Identifying the specific physical line structure may include reporting the structure, e.g., displaying values of parameters for the specific physical structure to a operator, writing the values to a file, or providing the values to a software application. For example, the software application may use the match information to qualify or disqualify the selected line 12-14. The parameters may provide gauge mixtures and tap locations and positions.

For the model lines, the specific physical structures are either stored in the same file listing the electrical properties of the model lines or determined from the reference equations. Actual values of the electrical properties and structure parameters of the model lines are

obtained prior to testing the subscriber line by analytic calculations or experimentation.

In a preferred embodiment, the computer 46 finds the "best" matching model line by calculating an error function for each model line (ml). The error function has one of two forms E or E' given by:

$E = \Sigma_f W(f)|M_{ml}(f) - M_{sl}(f)|$ and $E' = \Sigma_f W(f)|M_{ml}(f) - M_{sl}(f)|^{2Q}$.

$M_{ml}(f)$ and $M_{ssl}(f)$ are the values of the preselected frequency-dependent electrical properties of the model line (ml) and the selected subscriber line (ssl), respectively. Q and W(f) define the form of the error functions, i.e., E or E'. Q is a fixed integer, e.g., 1 or 2. W(f) is positive definite weight function, e.g., a function of frequency "f" or a constant.

In some embodiments, the preselected electrical properties $M_{ml}(f)$, $M_{ssl}(f)$ are the phases of one or more complex admittances of the lines ssl, ml. Various embodiments employ either the phase of the tip-to-ground admittance Y_{tg}, the phase of the ring-to-ground admittance Y_{rg}, and/or the phase of the tip-to-ring admittance Y_{tr}. If the tip-to-ground or ring-to-ground admittances Y_{tg}, Y_{rg} are used, many termination effects due to the subscriber units 16-18 of FIG. 1 are not seen. The phase of these admittances is often small, e.g., 4° or less, and approximately equals the ratio of the imaginary to real parts of the admittance. For such a case and Q = 1, the error function E' is:

$$E' = \Sigma_f [\, \mathrm{Im(admittance)}_{ml}/\mathrm{Re(admittance)}_{ml} - \mathrm{Im(admittance)}_{ssl}/\mathrm{Re(admittance)}_{ssl} \,]^2.$$

In another embodiment, the preselected electrical properties $M_{ml}(f)$, $M_{ssl}(f)$ are the full complex admittances of the lines ssl, ml, i.e., Y_{tg}, Y_{rg}, and/or Y_{tr}. Using the

complex admittances themselves can reduce computational times.

Finally, in some embodiments, the best match to the selected subscriber line 12-14 may include a several different model lines, e.g., model lines generating errors with a below threshold value. In these embodiments, the computer 46 identifies the selected subscriber line 12-14 as having one or more common features of all of the "best matching" lines. For example, the computer 46 may identify the specific physical structure of the selected subscriber line 12-14 as having a bridged tap if all of the best matching model lines have a bridged tap. Then, the computer 46 may use the presence of a bridged tap in combination with other measurements to qualify or disqualify the line 12-14.

FIG. 14 illustrates a method 150 of determining "best" matches by using the above-described phases. The computer 46 determines the length of the selected subscriber line using low frequency measurements for line capacitance performed by the measurement unit 40 and device 43 (step 152). Next, the computer 46 selects a model line having the same length as the selected subscriber line (step 154).

The computer 46 restricts comparisons to model lines with the same length as the subscriber line, because physical line length affects the values of the phases of admittances. Limiting comparisons to this subset of the reference set eliminates false matches with model lines whose lengths differ from the length of the selected subscriber line.

The computer 46 calculates the error function E', based on the phase of preselected admittances, for the selected model line (step 155). The computer 46 checks whether other model lines remain with the same length

(step 156). If other lines remain, the computer 46 repeats the determination of E' for another selected model line (157). If no lines remain, the computer 46 reports the model line having the smallest value for the error function E' as the "best" match to the selected subscriber line (step 158).

Since the reference set may contain as many as 10,000 to 100,000 model lines, the method 150 may search the reference set hierarchically to reduce the total number of searches. In a hierarchical scheme, a first search divides the reference set into non-overlapping groups of model lines. Each group has a large number of lines with similar specific physical structures and defines one model line as a representative of the group. The first search uses the method 150 to determine a "best" match between the selected subscriber line and one of the representative model lines. A second search uses the method 150 on the model lines of the group associated with the best matching representative model line found from the first search.

FIG. 15 is a flow chart illustrating a method 160 of qualifying subscriber lines, e.g., lines 12-14 of FIG. 1, for a high-speed data service, e.g., ISDN or ADSL. After selecting a subscriber line to test, the computer 46 searches a reference set of model lines for a "best" match to the selected subscriber line by using the methods 140, 150 of FIGs. 13 and 14 (step 162). The computer 46 identifies the selected subscriber line as having a bridged tap or mixture of gauges in response to the "best" match model line having a bridged tap or mixture of gauges, respectively (step 163). The computer 46 qualifies or disqualifies the selected subscriber line for the data service, at least in part, based upon whether the subscriber line has a bridged tap or mixture of gauges (step 164).

In some embodiments, the computer 46 uses the signal attenuation to qualify or disqualify the selected subscriber line according to a method described in co-pending U.S. Application No. 08/294,563 ('563). In those embodiments, the computer 46 calculates the signal attenuation by the methods described in the '563 application. Then, the computer 46 adjusts the calculated value of the signal attenuation up or down depending on a quality factor. The quality factor depends on the specific physical structure of the line, e.g., upon whether a bridged tap and/or a mixture of gauges is absent or present in the subscriber line.

According to the value of the quality factor, the computer 46 adjusts a calculated signal attenuation up or down by preselected amounts. For example, the attenuation may be decreased, unchanged, and increased in response to the quality factor being good, average, and poor, respectively. Then, the computer uses the adjusted signal attenuation to determine to qualify or disqualify the subscriber line for the data service according to methods described in the '563 application.

In other embodiments, the computer 46 uses some specific physical line structures as disqualifiers. For example, if the above-described methods lead to the detection of a bridged tap, the computer 46 may disqualify the line for the data service.

FIG. 16 is a flow chart illustrating a business method 165, which a TELCO uses to provide a high-speed data service to subscribers. The TELCO determines which subscriber lines 12-14 of FIG. 1 are qualified and/or disqualified for the data service according to the method 160 of FIG. 15 (step 166).

Using the method 160, the computer 46 determines whether line structures, e.g., bridged taps and/or

selected mixtures of gauges, are present. The specific physical structure is then used to adjust predictions of electrical properties of the subscriber line, e.g., a signal attenuation. If the adjusted values of the electrical properties are outside of thresholds for the data service the line is disqualified.

Among subscribers with qualified lines 12-14, the TELCO determines which subscribers having qualified lines do not subscribe to the data service (step 167). The TELCO offers the data service to subscribers having qualified lines and not presently subscribing to the service (step 168).

In response to finding subscribers with disqualified lines 12-14, the TELCO repairs or replaces those lines 12-14 (step 169).

STACKED BRIDGED TAP DETECTION

Referring again to FIG. 1, tests for bridged taps preferably use one-ended electrical measurements that are performed on subscriber lines 12-14 via the "standard" voice test access 44. The voice test access 44 acts as a low pass filter, which screens out frequencies above 20 to 100 KHz. Thus, electrical measurements are generally restricted to low frequencies between about 20 Hz and 100 KHz.

Bridged taps manifest their presence by peaks in the signal attenuation at high frequencies, e.g., between about 200 KHz and 1,000 KHz. Predicting features of the high- frequency signal attenuation from the low-energy measurements, which are available through the voice test access 44, is difficult and error prone. Present methods falsely predict the presence or absence of bridged taps in about 40% of the cases. False predictions are costly to subscribers and TELCO's, because they can result in lost

opportunities for high-speed data services and can also result in investments in transmission equipment that lines do not support.

The accuracy of tests for line conditions and faults, e.g., bridged taps, can be improved with stacked generalization methods that use multiple layers of classifiers. The classifiers determine values of auxiliary variables, which are the labels they assign to classify subscriber lines 12-14. Auxiliary variables are generated as outputs of classifiers. The auxiliary variables are thus, related to electrical measurements on the lines 12-14 indirectly through probabilistic relations embodied in the classifiers. The classifiers of the stack may be decision trees, neural networks, case-based reasoners, or statistically based classifiers. The old electrical properties and new auxiliary variables can be combined in classifiers that provide strong correlations between values of these quantities and the presence or absence of line faults and conditions, such as bridged taps and gauge mixtures.

FIG. 17 is a flow chart illustrating a method 170 for using stacked classifiers to detect selected line conditions or faults from electrical measurements made with the system 11 of FIG. 1. The system 11 preferably performs one-ended electrical measurements on a selected subscriber line 12-14 using either setup 52 or setup 60, shown in FIGs. 2A-2C, 3 (step 172). To these measurements, the computer 46 applies a set of rules that define a preselected set of derived electrical properties for the selected line 12-14 (step 173). Algebraic relations relate the derived properties to the measurements. The measured and derived electrical properties are listed in Appendix A.

The measured and derived properties together form the

input properties for the stack of classifiers. These input properties may include a preliminary value of the signal attenuation, the line length, line impedances, and ratios of line impedances. The selection of the input line properties for the stack can be changed to accommodate different expected compositions of the subscriber lines 12-14 being tested.

In each layer U, V of classifiers, shown in FIG. 17, the computer 46 determines values of one or more auxiliary variables for the selected line 12-14. The auxiliary variables may be logic-type variables indicating that the line 12-14 is labeled by a characteristic. The auxiliary variables may also be probability-type variables each indicating the likelihood that the line 12-14 is labeled by one of a plurality of characteristics.

In the first layer U of the stack, the computer 46 applies a first classifier to input electrical measurements and properties to determine a first auxiliary variable (step 175). The first auxiliary variable characterizes the line 12-14 with a label "nominal" or a label "non-nominal".

In a nominal line, low frequency properties provide a good prediction of the signal attenuation at the high frequencies where bridged taps strongly affect attenuation. Thus, knowing a value of an auxiliary variable that labels a line as nominal or non-nominal can improve the accuracy of predictions about the presence of line faults like bridged taps.

Also in the first layer U, the computer 46 applies one or more second classifiers to the input electrical properties to determine one or more other auxiliary variables (step 176). These auxiliary variables provide a preliminary prediction of whether the selected line 12-14 is qualified or disqualified for one or more high-speed

data services. In some embodiments, values of the auxiliary variables, found at step 176, indicate whether the subscriber line 12-14 is qualified for ISDN or ADSL data services or neither.

Disqualification for high-speed data service correlates with presence of a bridged tap, because a bridged tap lowers a line's capability to carry high-frequency signals. Thus, knowing a value of an auxiliary variable that preliminarily labels a line as qualified or disqualified for data transmissions can improve the accuracy of predictions about the presence or absence of bridged taps.

Steps 175 and 176 may be performed in parallel or sequentially. If these steps 175 and 176 are sequential, the value of the auxiliary variable output by the earlier step may be used in the later step. If step 175 is earlier, the classifier of step 176 may use the auxiliary variable labeling the line 12-14 as nominal or non-nominal, as an input. If step 176 is earlier, the classifier of step 175 may use the auxiliary variables providing a preliminary qualification or disqualification for data transmissions as inputs.

At the second layer V of the stack, the computer 46 applies a classifier to the auxiliary variables from steps 175 and 176 and the electrical measurements and properties from steps 172 and 173. This classifier determines whether the selected subscriber line 12-14 has a preselected type of line fault or condition (step 177). For example, the fault or condition may be existence of a bridged tap or a gauge mixture.

The layered stack U, V can predict the presence or absence of bridged taps with a substantially increased accuracy. The two-layered stack of FIG. 17 can predict the presence of bridged taps with an accuracy of between

about 75% and 85% and the absence of bridged taps with an accuracy of greater than about 97%.

In steps 175, 176, and 177, classifiers analyze input data to determine the values of output data. Henceforth, the input data, which includes one-ended measurements, properties derived from one-ended measurements, and/or auxiliary variables, are referred to as line features. The output data, which are values of auxiliary variables, are referred to as classifying labels.

Their line features and labels can describe the classifiers of steps 175, 176, and 177. The classifier in step 175 uses the selected measured and derived electrical properties of the selected line 12-14 as features to form classes with labels "nominal" and "non-nominal". The classifier of step 176 uses the same features to form classes with labels "ISDN qualified", "ADSL qualified", or "data service disqualified" in one embodiment. The classifier of step 177 uses the same features and values of the characterizing labels from steps 175, 176 to form classes with labels "bridged tap present" and "bridged tap absent".

The label "nominal" describes a type of signal attenuation over a range that includes both low measurement frequencies and high data service frequencies. For a nominal line, the difference between actual and predicted signal attenuations AA(f) and PA(f) has a simple dependence on frequency "f". The actual signal attenuation AA is the attenuation of the line determined from direct double-ended electrical measurements. The predicted signal attenuation PA is the attenuation obtained from one-ended electrical measurements, e.g., using the system 11 of FIG. 1.

The predicted signal attenuation PA(f) may be obtained from a subscriber line's capacitance, e.g., the

capacitance C^{tg}_{30Hz} between tip wire and ground measured at 30 Hz. One form for the predicted signal attenuation PA(f) is:

$$PA(f) = K(f)C^{tg}_{30Hz}.$$

In this formula, K(f) = -.1729, -.2074, -.2395, -.2627, and -.2881 dB/nano-Farads for respective frequencies f equal to 100, 200, 300, 400, and 500 KHz.

Another form for the predicted attenuation PA(f) is described in co-pending U.K. Patent Application 9914702.7.

For a nominal line, the difference, DFF(f), between the actual and the predicted signal attenuations AA(f), PA(f) has one of the following forms:

1) DFF(f) < 3.5 dB for 100 KHz < f < 500 KHz;

2) 3.5 dB $\leq$ DFF(f) < 10.0 dB for 100 KHz < f < 500 KHz; or

3) DFF(f) $\geq$ 10.0 dB for 100 KHz < f < 500 KHz.

If the frequency dependent difference DFF(f), i.e., |AA(f)-PA(f)|, does not have form 1, 2, or 3, the line 12-14 is classified as a non-nominal line. Thus, a direct determination of whether a particular line 12-14 is nominal requires both one-ended and two-ended measurements to obtain both PA(f) and AA(f).

FIG. 18A shows predicted and actual attenuations of exemplary nominal lines A, B, and C. For the line A, predicted and actual attenuations PA_A and AA_A differ by less than 3.5 dB for the entire frequency range between 100 and 500 KHz. The line A has a DFF(f) of form 1. For the line B, predicted and actual attenuations PA_B, AA_B differ by between 4 and 9 dB over the 100 KHz to 500 KHz frequency range. The line B has a DFF(f) of form 2. For the line C, predicted and actual attenuations PA_C, AA_C differ by between more than 10.0 dB over the 100 KHz to 500 KHz frequency range. The line C has a DFF(f) of form

3.

FIG. 18B shows predicted and actual attenuations of exemplary non-nominal lines D and E. For the line D, predicted and actual signal attenuations PA_D, AA_D differ by about 8 dB at 200 and 400 KHz and are equal at 150 and 300 KHz. This form for PA_D and AA_D does not correspond to a DFF(f) of form 1, 2, or 3. For the line E, predicted and actual signal attenuations PA_E, AA_E differ by less than 3.5 dB at frequencies between 100 and 200 KHz and by more than 8 dB at frequencies between 400 and 500 KHz. This form for PA_E and AA_E also does not correspond to a DFF(f) of form 1, 2, or 3.

In the non-nominal lines D and E wide fluctuations occur in DFF(f). These fluctuations make a constant shift of the predicted attenuation PA(f) a poor approximation to the actual attenuation AA(f) over the whole range that includes both high and low frequencies.

FIG. 18C shows predicted and actual signal attenuations PA_F, AA_F for another nominal subscriber line F. A shifted predicted attenuation SPA_F, which has been obtained by shifting the predicted attenuation PA_F by a constant, is also shown. For the nominal line F, the shifted predicted attenuation SPA_F provides a better approximation to the actual attenuation AA_F that the predicted attenuation PA_F over the entire range between 100 KHz and 500 KHz.

The actual and predicted signal attenuations AA(f), PA(f) of nominal lines are approximately related by a constant shift over a wide frequency range. The wide frequency range includes both low measurement frequencies and high frequencies where effects of bridged taps are directly observable.

In step 176 of FIG. 17, the labels ISDN qualified, ADSL qualified, and data service disqualified are defined

by the value of the actual signal attenuation at 100 KHz and 300 KHz. High-speed data qualified and disqualified lines satisfy:

Class Label	100 KHz	300 KHz
ADSL qualified	attenuation > -47dB	attenuation > -40
ISDN qualified	attenuation > -47dB	attenuation ≤ -40
Disqualified	attenuation ≤ -47dB	attenuation ≤ -40

Thus, qualification or disqualification of a line 12-14 for ADSL and ISDN are defined by the value of the actual signal attenuation at two high frequencies, i.e., 100 KHz and 300 KHz.

FIG. 19 illustrates a decision tree 180 that determines a classifying label, e.g., an auxiliary variable, generated in steps 175-177 of FIG. 17. A separate classifier, e.g., a decision tree, is used to determine each such label.

The decision tree 180 has a hierarchical arrangement of branching tests 1, 1.1-1.2; 1.1.1-2.2.2,..., which are grouped into descending levels 1, 2, 3.... Each test assigns feature data received from a higher level to disjoint subsets in the next lower level. The subsets of the lower level are located at ends of arrows starting at the test. For example, test 1.1 assigns feature data to subsets 1.1 and 1.2, which are located at the ends of arrows 6 and 7, see FIG. 20. At the lower level, another set of tests can act on the feature data.

FIG. 20 illustrates how the tests 1, 1.1, 1.2,... of the various levels of the decision tree 180 of FIG. 19 act on a set of feature data associated with the subscriber lines 12-14. Each successive test partitions the set, i.e., by using values of the selected features, into increasingly disjoint output subsets. For example, test 1

partitions the initial feature data into subset 1 and subset 2. The distal end of each path through the decision tree 180 assigns a subscriber line to a final subset in which the lines are primarily associated with one value of the classifying label of the tree 180. Some decision trees 180 determine a probability that the subscriber line 12-14 has the value of the label of the final subset to which it is assigned.

FIG. 21 is a flow chart for a method 190 of creating decision trees for use as the classifiers in steps 175, 176, and 177 of FIG. 17. The method 190 uses machine learning methods.

To employ machine learning, a training set of subscriber line data is created (step 192). The content the training set includes model lines with different values of the labels used by the decision tree to classify lines. If the decision tree classifies lines with the label "bridged tap present" and "bridged tap absent", then some of the lines of the training sets will have bridged taps and some of the lines will not have bridged taps. Similarly, in a stack of trees that classifies lines with a particular label, each tree therein is constructed from a training set having lines with different values of the particular label.

For each line of the training set, a computer and/or operator determines the values of a set of potential features and the classifying labels (194).

The potential features include one-ended measured and derived electrical properties that may be used in the tests of the decision tree. The potential electrical properties of one embodiment are listed in Appendix A. The potential features also include values of any auxiliary variables that may be used in the tests of the decision tree. For example, a decision tree used in step

177 of FIG. 17 would also include, as potential features, auxiliary variables determining whether a line is nominal and preliminarily qualified for preselected data services.

The classifying labels are the values of the auxiliary variables output by the decision tree. The values of these output auxiliary variables may, for example, include a determination of whether a line is nominal, qualified, or has a bridged tap.

Determinations of values of the classifying labels for the lines of the training set may use both one-ended and two-ended electrical measurements. For example, to classify a line of the training set as nominal or non-nominal a two-ended measurement of the actual attenuation and a one-ended measurement of the predicted attenuation are needed. Similarly, to determine the classifying label associated with qualification for data services, two-ended measurements of the actual attenuation are used. The two-ended measurements are not, however, used as inputs in the construction of decision trees.

From the values of the potential features and classifying labels of each line in the training set, the computer 46 recursively determines the branching tests of the decision tree (step 196).

FIG. 22 is a flow chart for a method 200 of determining the branching tests of the decision tree 180 shown in FIGs. 19-20. For each potential feature, the computer 46 constructs a test and partitions the training set into groups of disjoint subsets (step 202). The test associated with a feature assigns each line of the training set to subsets according to a value of that feature for the line.

The computer 46 evaluates gain ratio criteria for the partitioning of the training set produced by each

potential feature (step 204). The gain ratio criteria measures increases in consistency of line membership for different values of the classification label in each subset. The computer 46 uses the gain ratio criteria to find a best test and defines test 1 of the decision tree 180 to be the best test (step 206).

The computer loops back to perform steps 202, 204, and 206 for each subset produced by test 1 to determine the tests of level 2 of the decision tree 180 (loop 208). In these determinations, the subsets produced by the best test of level 1 become training sets for finding the tests of level 2. After performing steps 202, 204, and 206 for the subsets 1 and 2, the computer 46 has determined the tests 1.1 and 1.2 of the level 2 (loop 208). The computer 46 performs loop 208 either until further branches produce line classification errors below a preselected threshold or until no features remain.

Several methods exist for defining the best branching tests at each level of the decision tree 180 of FIG. 19. The C4.5 method defines best tests as tests producing the highest values of the gain ratio criteria. The C4.5* method randomly picks the best tests from the tests whose values of the gain ratio criteria are within a preselected selection percentage of the highest value.

The C4.5* algorithm predicts probabilities that a line with features "d" will be partitioned into each final subset of the decision tree. The probability that the line will be in the majority final subset L is:

$$P_L(d) = 1 - (\Sigma_{(j \text{ not in } L)} N_j + 1)/(\Sigma_{(i \text{ in } L)} N_i + 2).$$

Here, N_i is the number of lines in subset "i". The probability that the line will be in a subset "i" is:

$$P_i(d) = [1 - P_L(d)](N_i/\Sigma_{(j \text{ in } L)} N_j).$$

In embodiments using the C4.5* algorithm, the above-

described probabilities are the auxiliary variables used as features in the steps 175-177 of FIG. 17.

Various embodiments combine the methods of detecting line faults (70, 90), determining lines structures (140, 160), and stacking fault detection (170), shown in FIGs. 7, 8, 13, 15, 17. By combining the above-mentioned methods, these embodiments can better classify subscriber lines according to a variety of criteria. These criteria include presence of line conditions and faults, line speed, and qualification status.

Other embodiments are within the scope of the following claims.

What is claimed is:

```
30Hz Raw Measurements:
      Ytr(30) - Admittance tip-to-ring measured at 30Hz
      Ytg(30) - Admittance tip-to-ground measured at 30Hz
      Yrg(30) - Admittance ring-to-ground measured at 30Hz

30Hz Derived Measurements:
      30Gtr - Conductance tip-to-ring measured at 30Hz = real(Ytr(30))
      30Str - Susceptance tip-to-ring measured at 30Hz = imag(Ytr(30))
      30Gtg - Conductance tip-to-ground measured at 30Hz = real(Ytg(30))
      30Stg - Susceptance tip-to-ground measured at 30Hz = imag(Yt(30)
      30Ctr - Capacitance tip-to-ring measured at 30Hz = Str(30)/(2*pi*30)
      30Ctg - Capacitance tip-to-ground measured at 30Hz = St(30)/(2*pi*30)
      Lmeas - Length in kft measured at 30Hz = 30Ctg/17.47

150Hz-20KHz Raw Measurements:
      Ytr(f) - Admittance tip-to-ring where f=150Hz,600Hz,1050Hz,1500Hz,....19950Hz
      Ytg(f) - Admittance tip-to-ground where f=150Hz,600Hz,1050Hz,1500Hz,....19950Hz
      Yrg(f) - Admittance ring-to-ground where f=150Hz,600Hz,1050Hz,1500Hz,....19950Hz


150Hz-20KHz Derived Measurements:
      150Gtr - Conductance tip-to-ring measured at 150Hz = real(Ytr(150))
      600Gtr - Conductance tip-to-ring measured at 600Hz = real(Ytr(600))
            .
            .
      19950Gtr - Conductance tip-to-ring measured at 19950Hz = real(Ytr(19950))

      150Str - Susceptance tip-to-ring measured at 150Hz = imag(Ytr(150))
      600Str - Susceptance tip-to-ring measured at 600Hz = imag(Ytr(600))
            .
            .
      19950Str - Susceptance tip-to-ring measured at 19950Hz = imag(Ytg(19950))

      150Gtg - Conductance tip-to-ground measured at 150Hz = real(Ytg(150))
      600Gtg - Conductance tip-to- ground measured at 600Hz = real(Ytg(600))
            .
            .
      19950Gtg - Conductance tip-to- ground measured at 19950Hz = real(Ytg(19950))

      150Stg - Susceptance tip-to- ground measured at 150Hz = imag(Ytg(150))
      600Stg - Susceptance tip-to- ground measured at 600Hz = imag(Ytg(600))
            .
            .
      19950Stg - Susceptance tip-to- ground measured at 19950Hz = imag(Ytg(19950))

      150Ctr - Capacitance tip-to-ring measured at 150Hz = 150Str/(2*pi*150)
      600Ctr - Capacitance tip-to-ring measured at 600Hz = 600Str/(2*pi*600)
            .
            .
      19950Ctr - Capacitance tip-to-ring measured at 19950Hz = 19950Str/(2*pi*19950)

      150Ctg - Capacitance tip-to-ground measured at 150Hz = 150Stg/(2*pi*150)
      600Ctg - Capacitance tip-to-ground measured at 600Hz = 600Stg/(2*pi*600)
            .
            .
      19950Ctg - Capacitance tip-to-ground measured at 19950Hz = 19950Stg/(2*pi*19950)
```

150Hz-20KHz Secondary Derived Measurements:
C30/C4K - Ratio of tip-to-ground Capacitance at 30Hz to 4200Hz
C4K/C10K - Ratio of tip-to-ground Capacitance at 4200Hz to 10050Hz
Cslope - Tip-to-ground Capacitance ratio slope = (C4K/C10K)/(C30/C4K)
C30-C4K - Difference in tip-to-ground Capacitance at 30Hz and 4200Hz
C4K-C10K - Difference in tip-to-ground Capacitance at 4200Hz and 10050Hz
Cdelta - Tip-to-ground Capacitance difference delta = (C4K-C10K)/(C30-C4K)

G4K/G30 - Ratio of tip-to-ground Conductance at 4200Hz to 30Hz
G10K/G4K - Ratio of tip-to-ground Conductance at 10050Hz to 4200Hz
Gslope - Tip-to-ground Conductance ratio slope = (G10K/G4K)/(G4K/G30)
G4K-G30 - Difference in tip-to-ground Conductance at 30Hz and 4200Hz
G10K-G4K - Difference in tip-to-ground Conductance at 4200Hz and 10050Hz
Gdelta - Tip-to-ground Conductance difference delta = (G10K-G4K)/(G4K-G30)

C30/G30 - Ratio of Tip-to-ground Capacitance to Conductance at 30Hz
C30/G4K - Ratio of Tip-to-ground Capacitance at 30Hz to Conductance at 4200Hz
C4K/G4K - Ration of Tip-to-ground Capacitance to Conductance at 4200Hz

Gtr_dmax - Maximum positive slope of Gtr(f) = max(derivative(Gtr(f)/df))
Gtr_fmax - Frequency at which Gtr_dmax occurs
Gtr_dmin - Maximum negative slope of Gtr(f) = min(derivative(Gtr(f)/df))
Gtr_fmin - Frequency at which Gtr_dmin occurs
Gtr_fpk - Frequency of first peak (local maxima)in Gtr(f)
Gtr_fval - Frequency of first valley(local minima)in Gtr(f)
Gtr_d_delta - Gtr Max/Min Derivative difference = Gtr_dmax-Gtr_dmin
Gtr_pk_delta - Gtr peak/valley frequency difference = Gtr_fval-Gtr_fpk
Gtr_pk - Value of Gtr(f) at frequency Gtr_fpk
Gtr_val - Value of Gtr(f) at frequency Gtr_fval
Gtr_delta - Gtr peak/valley difference = Gtr_pk-Gtr_val

Gtg_dmax - Maximum positive slope of Gtg(f) = max(derivative(Gtg(f)/df))
Gtg_fmax - Frequency at which Gtg_dmax occurs
Gtg_dmin - Maximum negative slope of Gtg(f) = min(derivative(Gtg(f)/df))
Gtg_fmin - Frequency at which Gtg_dmin occurs
Gtg_d_delta - Gtg Max/Min Derivative difference = Gtg_dmax-Gtg_dmin

Ctr_dmax - Maximum positive slope of Ctr(f) = max(derivative(Ctr(f)/df))
Ctr_fmax - Frequency at which Ctr_dmax occurs
Ctr_dmin - Maximum negative slope of Ctr(f) = min(derivative(Ctr(f)/df))
Ctr_fmin - Frequency at which Ctr_dmin occurs
Ctr_fpk - Frequency of first peak (local maxima)in Ctr(f)
Ctr_fval - Frequency of first valley(local minima)in Ctr(f)
Ctr_d_delta - Ctr Max/Min Derivative difference = Ctr_dmax-Ctr_dmin
Ctr_pk_delta - Ctr peak/valley frequency difference = Ctr_fval-Ctr_fpk
Ctr_val - Value of Ctr(f) at frequency Ctr_fval

Ctg_dmax - Maximum positive slope of Ctg(f) = max(derivative(Ctg(f)/df))
Ctg_fmax - Frequency at which Ctg_dmax occurs
Ctg_dmin - Maximum negative slope of Ctg(f) = min(derivative(Ctg(f)/df))
Ctg_fmin - Frequency at which Ctg_dmin occurs
Ctg_d_delta - Ctg Max/Min Derivative difference = Ctg_dmax-Ctg_dmin

Str_dmax - Maximum positive slope of Str(f) = max(derivative(Str(f)/df))
Str_fmax - Frequency at which Str_dmax occurs
Str_dmin - Maximum negative slope of Str(f) = min(derivative(Str(f)/df))
Str_fmin - Frequency at which Str_dmin occurs

150Hz-20KHz Secondary Derived Measurements:

Str_fpk - Frequency of first peak (local maxima)in Str(f)
Str_fval - Frequency of first valley(local minima)in Str(f)
Str_d_delta - Str Max/Min Derivative difference = Str_dmax-Str_dmin
Str_pk_delta - Str peak/valley frequency difference = Str_fval-Str_fpk
Str_pk - Value of Str(f) at frequency Str_fpk
Str_val - Value of Str(f) at frequency Str_fval
Str_delta - Str peak/valley difference = Str_pk-Str_val

Stg_dmax - Maximum positive slope of Stg(f) = max(derivative(Stg(f)/df))
Stg_fmax - Frequency at which Stg_dmax occurs
Stg_dmin - Maximum negative slope of Stg(f) = min(derivative(Stg(f)/df))
Stg_fmin - Frequency at which Stg_dmin occurs
Stg_fpk - Frequency of first peak (local maxima)in Stg(f)
Stg_fval - Frequency of first valley(local minima)in Stg(f)
Stg_d_delta - Stg Max/Min Derivative difference = Stg_dmax-Stg_dmin
Stg_pk_delta - Stg peak/valley frequency difference = Stg_fval-Stg_fpk

Gtg20k/Gtg8k - Ratio of Gtg at 19950Hz and 8250Hz
Gtg20k/Gtg4k - Ratio of Gtg at 19950Hz and 4200Hz
Cgt30/Cgt20k - Ratio of Ctg at 30Hz and 19950Hz
Cgt30/Cgt8k - Ratio of Ctg at 30Hz and 8250Hz

What is claimed is:

1. A method of determining a physical structure of a subscriber line, comprising:

searching a reference set for a match between the subscriber line and a model line of the reference set, the match being based on electrical properties of the lines; and

identifying that the subscriber line has a specific physical structure in response to finding a match with one of the model lines that has the specific physical structure.

2. The method of claim 1, further comprising:

performing electrical measurements to determine the electrical properties, the electrical measurements being one-ended measurements.

3. The method of claim 2, wherein the act of searching comprises:

evaluating an error function for each model line to determine quality of the match between values of the electrical properties of the model and subscriber lines.

4. The method of claim 2, wherein the one-ended measurements determine one of a tip-to-ring admittance, a tip-to-ground admittance, and a ring-to-ground admittance.

5. The method of claim 4, wherein the electrical properties include a quantity representative of a phase of an impedance of the subscriber line.

6. The method of claim 4, wherein the act of

performing includes transmitting a voltage signal to the subscriber line through a test access of a switch or a DSLAM device.

7. The method of claim 2, wherein the act of identifying indicates that the subscriber line has one or more bridged taps in response to the matching model line having one or more bridged taps.

8. The method of claim 2, wherein the act of identifying indicates that the subscriber line has a mixture of gauges in response to the matching model having a mixture of gauges.

9. The method of claim 2, wherein the act of searching for comprises:

looking up values of the electrical properties of the model lines in a data storage device.

10. The method of claim 2, wherein the act of searching comprises:

computing values of a portion of the electrical properties of the model lines using a reference equation.

11. The method of claim 2, wherein the one-ended measurements are performed at a plurality of frequencies.

12. The method of claim 11, further comprising:

calculating a value of signal attenuation for the subscriber line from the one-ended measurements; and

increasing the calculated value in response to determining that the line has a bridged tap.

13. A method of qualifying a subscriber line for a data service, comprising:

searching a reference set of model lines for a best match to a subscriber line by comparing sets of electrical properties;

determining that the subscriber line has a specific physical structure in response to the best matching model line having the specific physical structure; and

disqualifying the subscriber line for the data service, in part, in response to determining that the specific physical structure corresponds to a disqualified line.

14. The method of claim 13, wherein the electrical properties are obtained from one-ended measurements on the subscriber line.

15. The method of claim 14, wherein the act of searching for a best match comprises:

evaluating an error function for each model line to determine quality of correspondence between the electrical properties of the model line and of the subscriber line.

16. The method of claim 14, wherein the compared properties include a quantity indicative of the phase an impedance of the subscriber line.

17. The method of claim 14, further comprising:

making one-ended electrical measurements on the subscriber line at a plurality of frequencies to obtain the electrical properties.

18. The method of claim 17, further comprising:

calculating a value of signal attenuation for the subscriber line from the one-ended measurements; and

increasing the value in response to determining that the line has a bridged tap.

19. The method of claim 18, wherein the act of disqualifying is responsive to the increased value being greater than a predetermined threshold value for the data service.

20. The method of claim 17, wherein the one-ended measurements determine one of a tip-to-ring admittance, a tip-to-ground admittance, and a ring-to-ground admittance.

21. The method of claim 17, wherein the making one-ended measurements includes driving the subscriber line through a test access of a switch or DSLAM device.

22. A method of providing a data service, comprising:

searching a reference set of model lines for a best match to a subscriber's line by comparing measured electrical properties to properties of the model lines;

determining whether the subscriber's line is qualified for the data service based in part on whether the best matching model line has a one of a bridged tap and a mixture of gauges; and

performing a business action in response to determining that the subscriber's line is qualified.

23. The method of claim 22, wherein the business

action includes offering one of the data service and a service quality-level agreement to the subscriber.

24. The method of claim 22, wherein the act of offering comprises:

performing one of a repair and a replacement of the subscriber line in response to determining that subscriber line is disqualified.

25. The method of claim 22, further comprising:

repeating the acts of searching, determining, and performing for a plurality of subscriber lines connected to one telephony switch or one DSLAM device.

26. The method of claim 22, wherein the act of searching for a best match comprises:

evaluating an error function for each model line to determine quality of a correspondence between the electrical properties of the model line and the subscriber line.

27. The method of claim 22, wherein the compared properties include a quantity indicative of a phase of an impedance of the subscriber line.

28. The method of claim 22, further comprising:

performing one-ended electrical measurements at a plurality of frequencies to obtain the electrical properties.

29. The method of claim 22, wherein the act of determining further comprises:

calculating a value of a signal attenuation for the

subscriber line from the one-ended measurements;

increasing the value in response to determining that the line has a bridged tap or a mixture of gauges; and

wherein the act of qualifying is responsive to the increased value being less than a predetermined threshold value for the data service.

30. A data storage device storing an executable program of instructions for determining a structure of a subscriber line, the instructions to cause a computer to:

search a reference set for a match between the subscriber line and a model line of a reference set, the match being based on electrical properties of the lines; and

identify that the subscriber line has a specific physical structure in response to finding a match with one of the model lines that has the specific physical structure.

31. The device of claim 30, wherein the electrical properties are determined from one-ended measurements.

32. The device of claim 30, wherein the instructions to search cause the computer to:

evaluate an error function for each model line to determine quality of the match between values of the electrical properties of the model and subscriber lines.

33. The device of claim 30, wherein the electrical properties include a quantity representative of a phase of an impedance of the subscriber line.

34. The device of claim 31, wherein the

instructions to identify cause the computer to indicate that the subscriber line has one or more bridged taps in response to the matching model line having one or more bridged taps.

35. The device of claim 31, wherein the instructions to identify cause the computer to indicate that the subscriber line has a mixture of gauges in response to the matching model having a mixture of gauges.

36. The device of claim 31, wherein the electrical properties in a property at a plurality of frequencies.

37. The device of claim 31, the instructions further causing the computer to:

calculate a value of signal attenuation for the subscriber line from the one-ended measurements; and

increase the calculated value in response to determining that the line has a bridged tap.

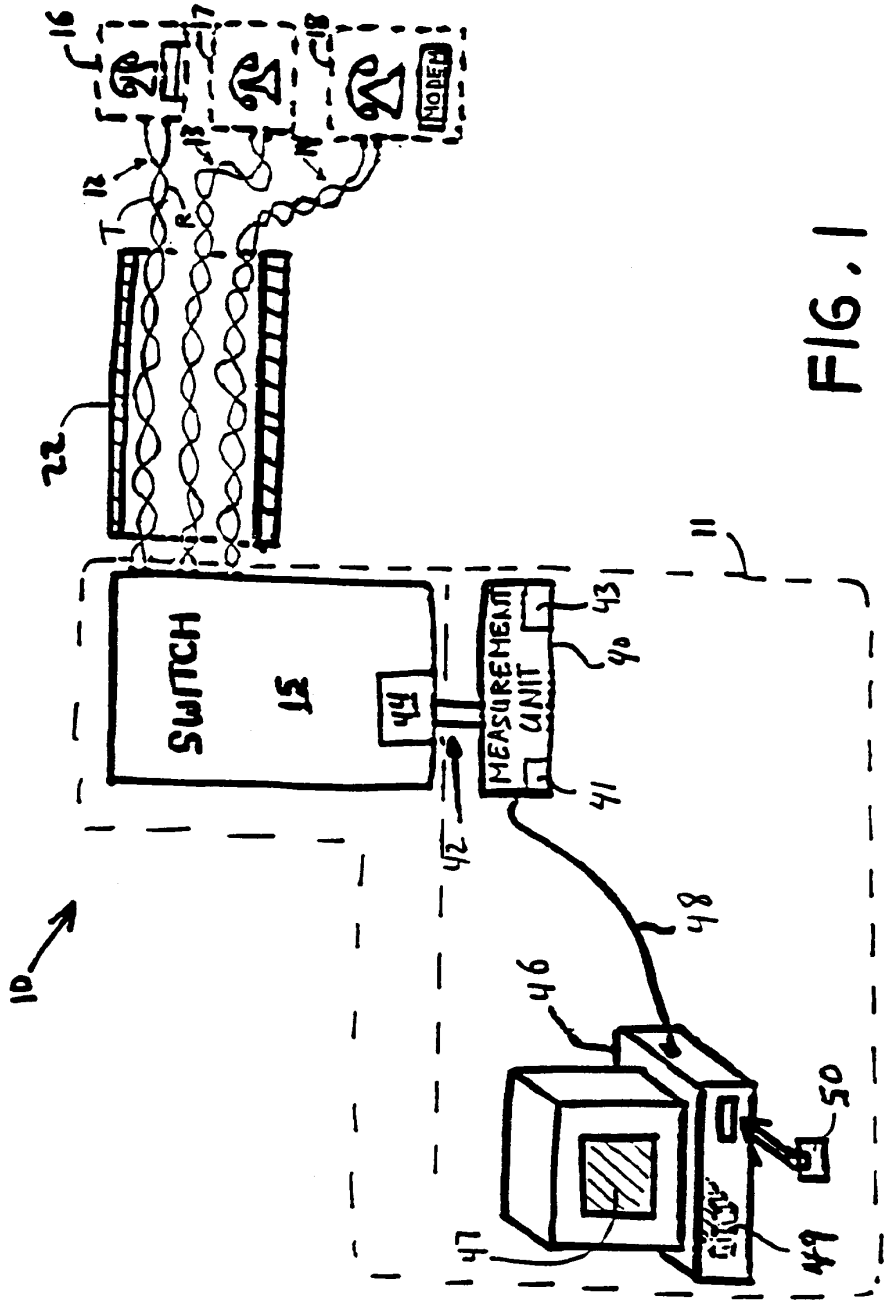
16
17
18
NODE1
12
T
R
22
11
SWITCH
15
44
MEASUREMENT
UNIT
43
40
41
42
48
46
50
47
49
10

FIG. 1

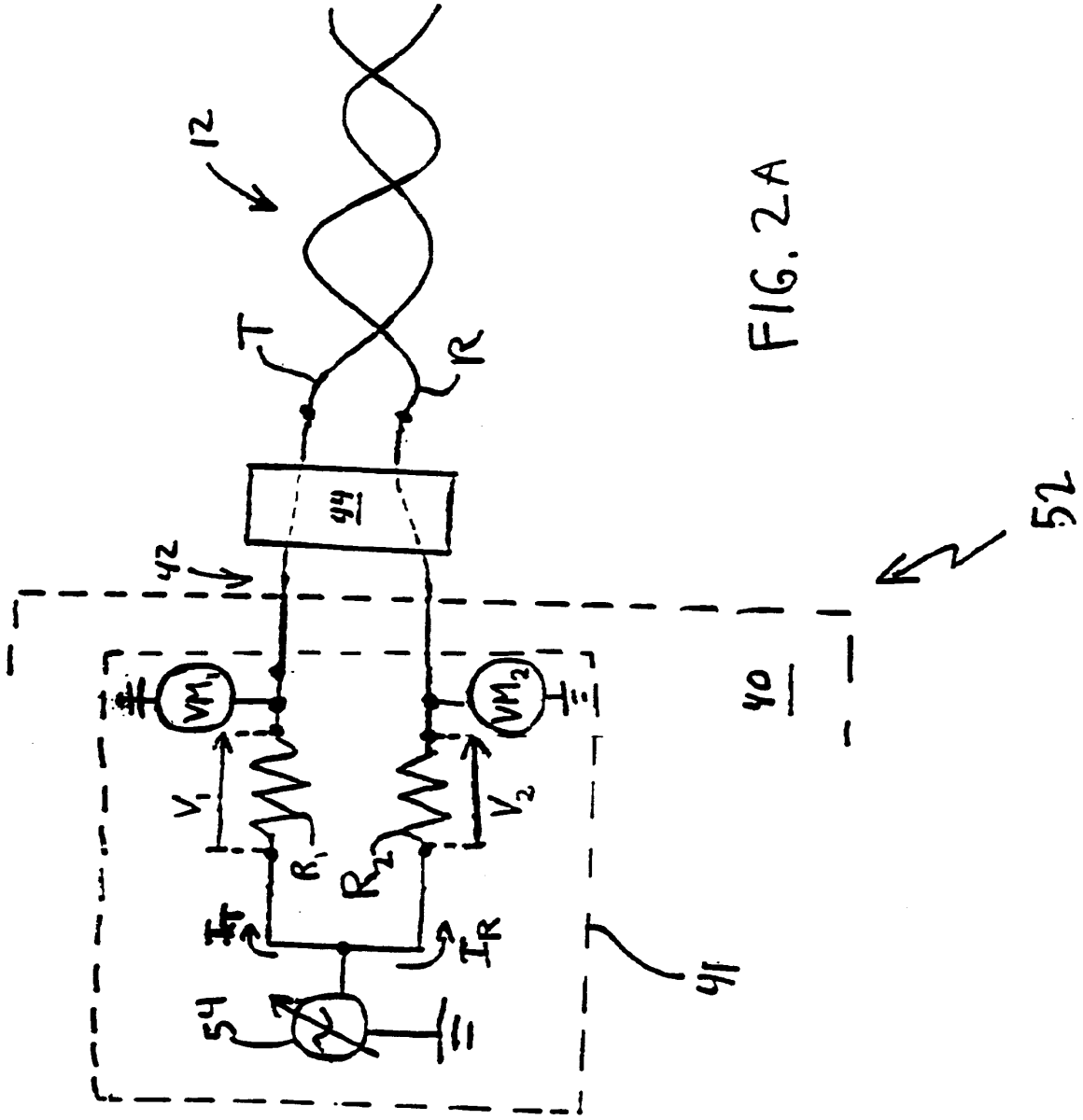

FIG. 2A

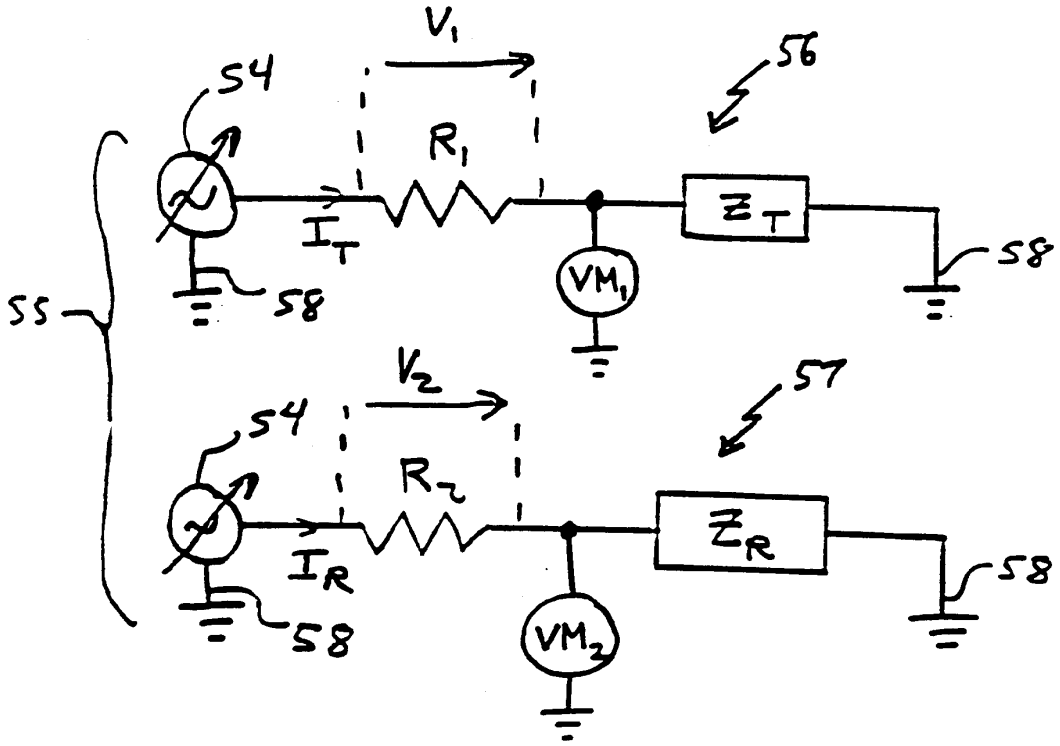

FIG. 2B

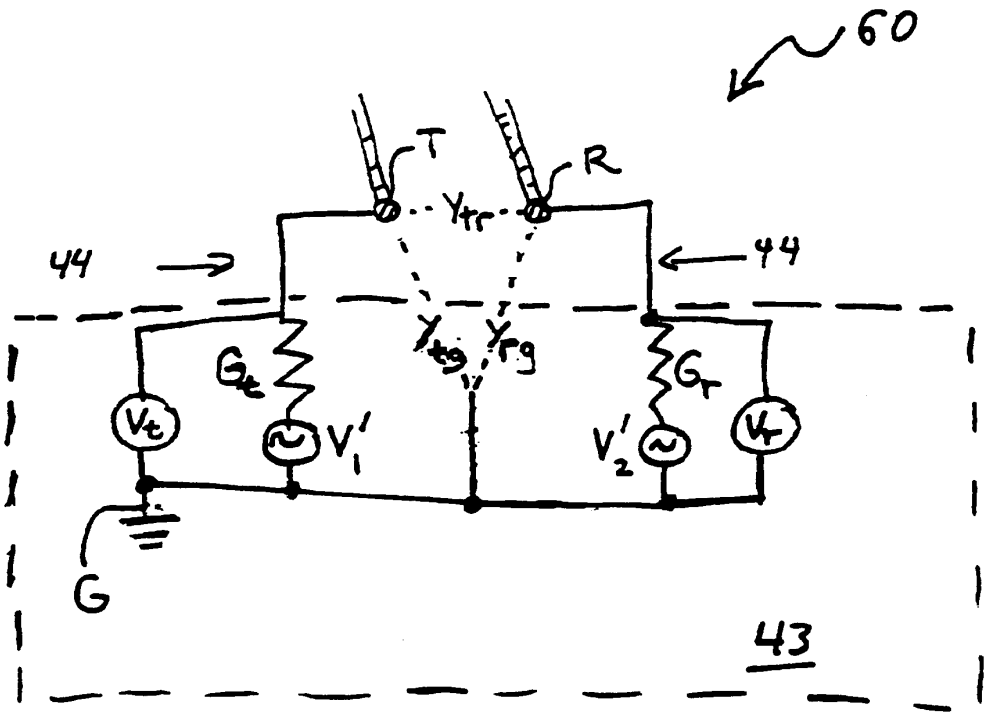

FIG. 2C

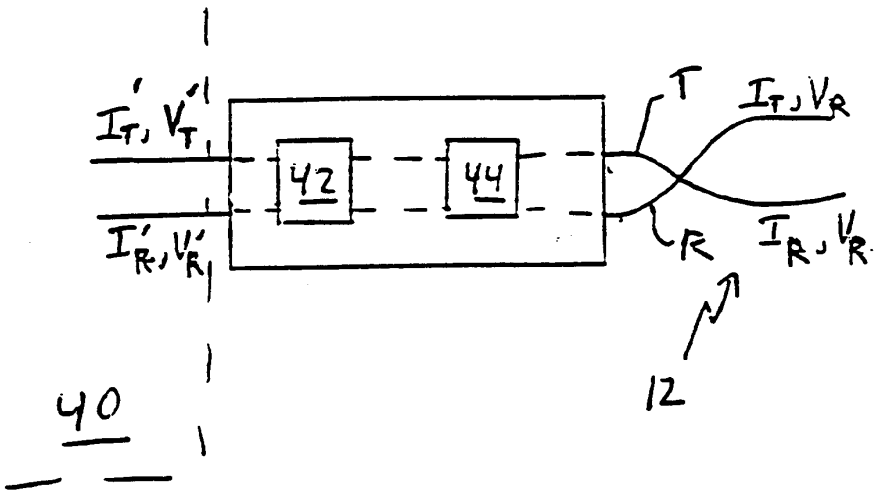

FIG. 3

FIG. 4

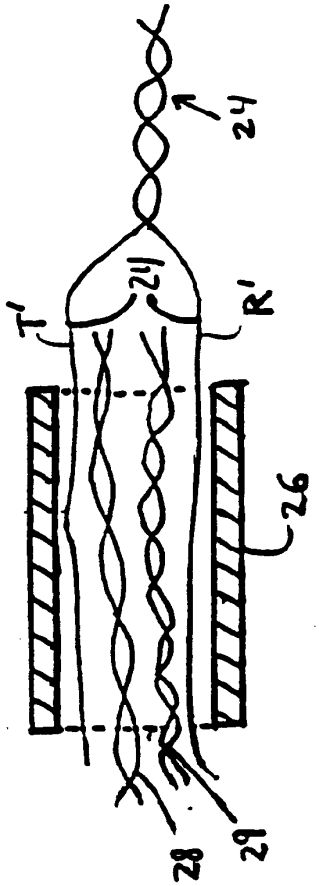

FIG. 5

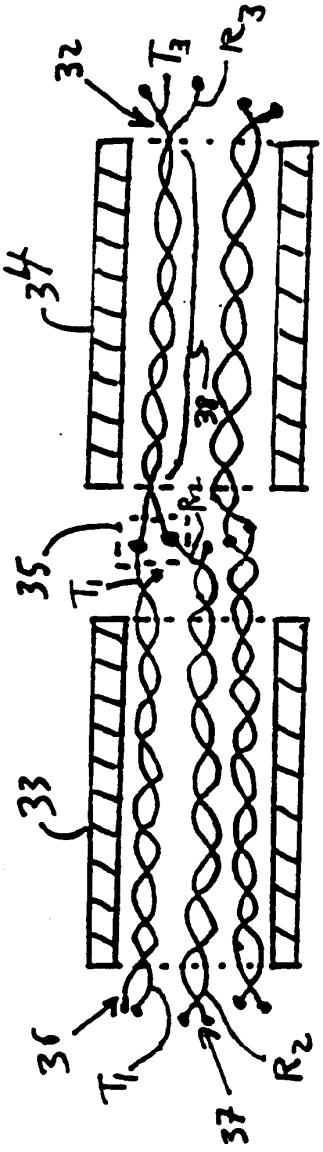

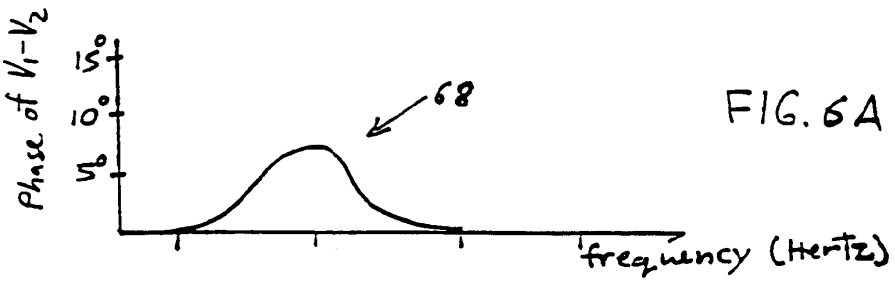
Phase of V_1-V_2
15°
10°
5°
68
frequency (Hertz)

FIG. 6A

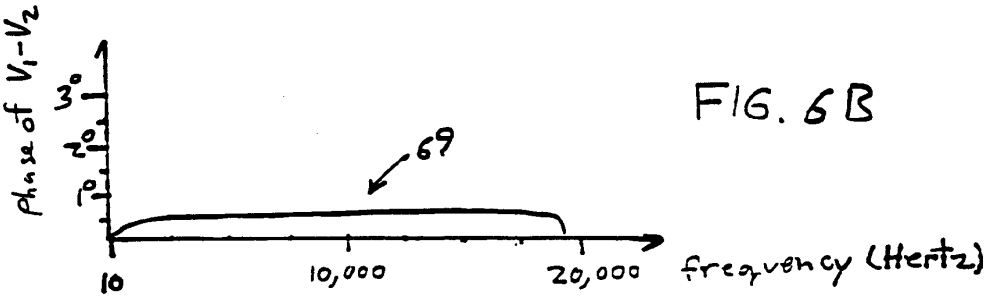
Phase of V_1-V_2
3°
2°
1°
69
10
10,000
20,000
frequency (Hertz)

FIG. 6B

FIG. 7

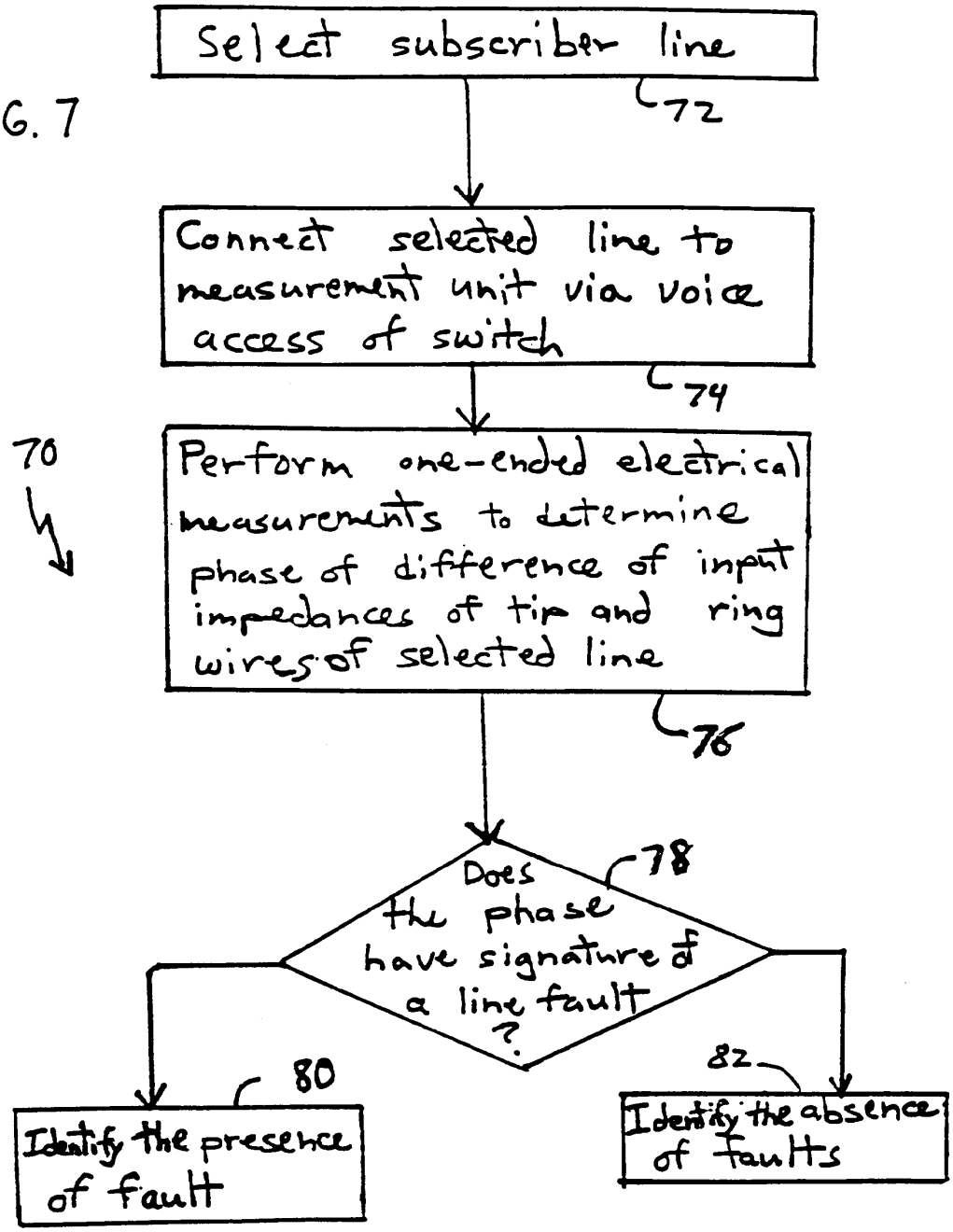
Select subscriber line
72
Connect selected line to measurement unit via voice access of switch
74
70
Perform one-ended electrical measurements to determine phase of difference of input impedances of tip and ring wires of selected line
76
Does the phase have signature of a line fault ?
78
80
Identify the presence of fault
82
Identify the absence of faults

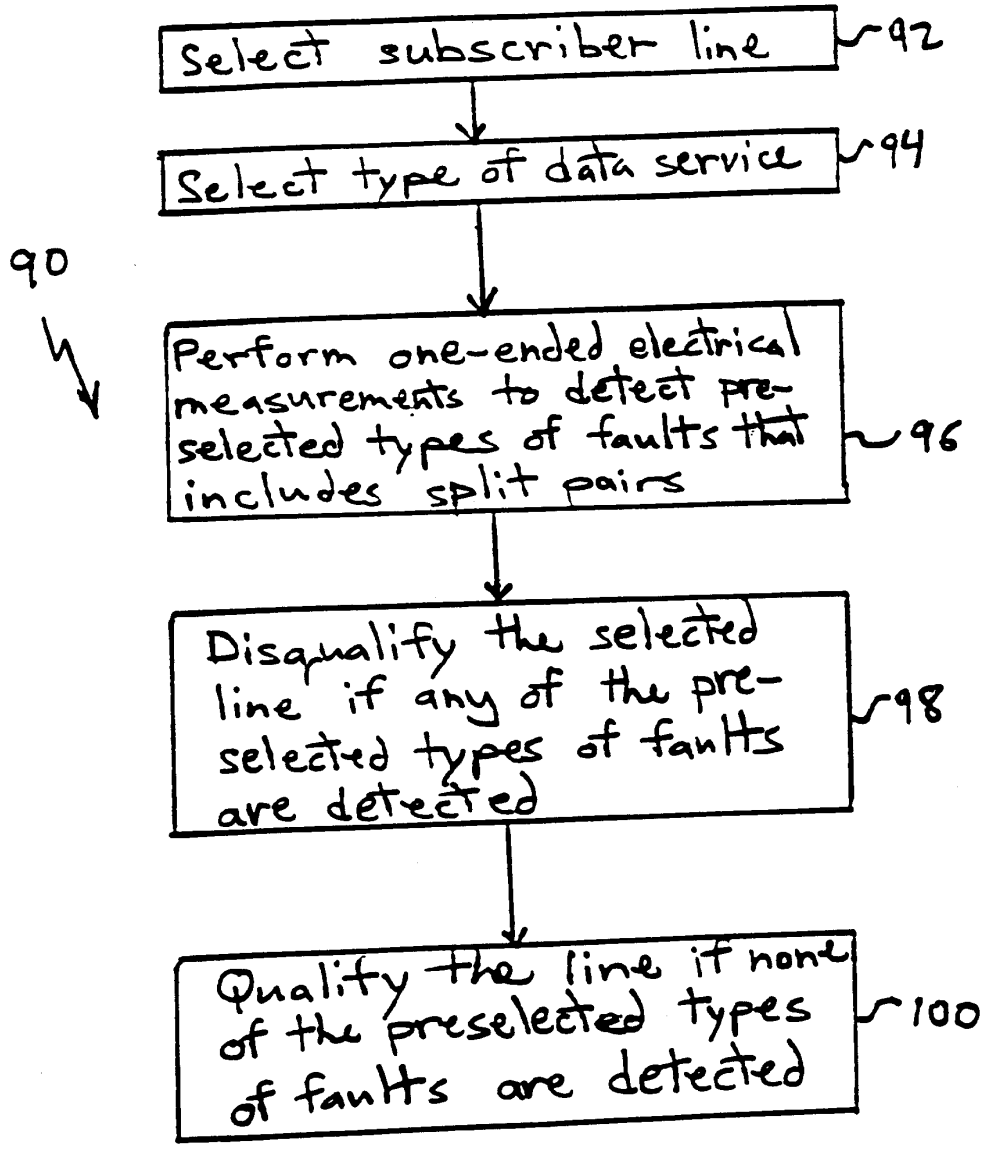
Select subscriber line
92
Select type of data service
94
90
Perform one-ended electrical measurements to detect pre-selected types of faults that includes split pairs
96
Disqualify the selected line if any of the pre-selected types of faults are detected
98
Qualify the line if none of the preselected types of faults are detected
100

FIG. 8

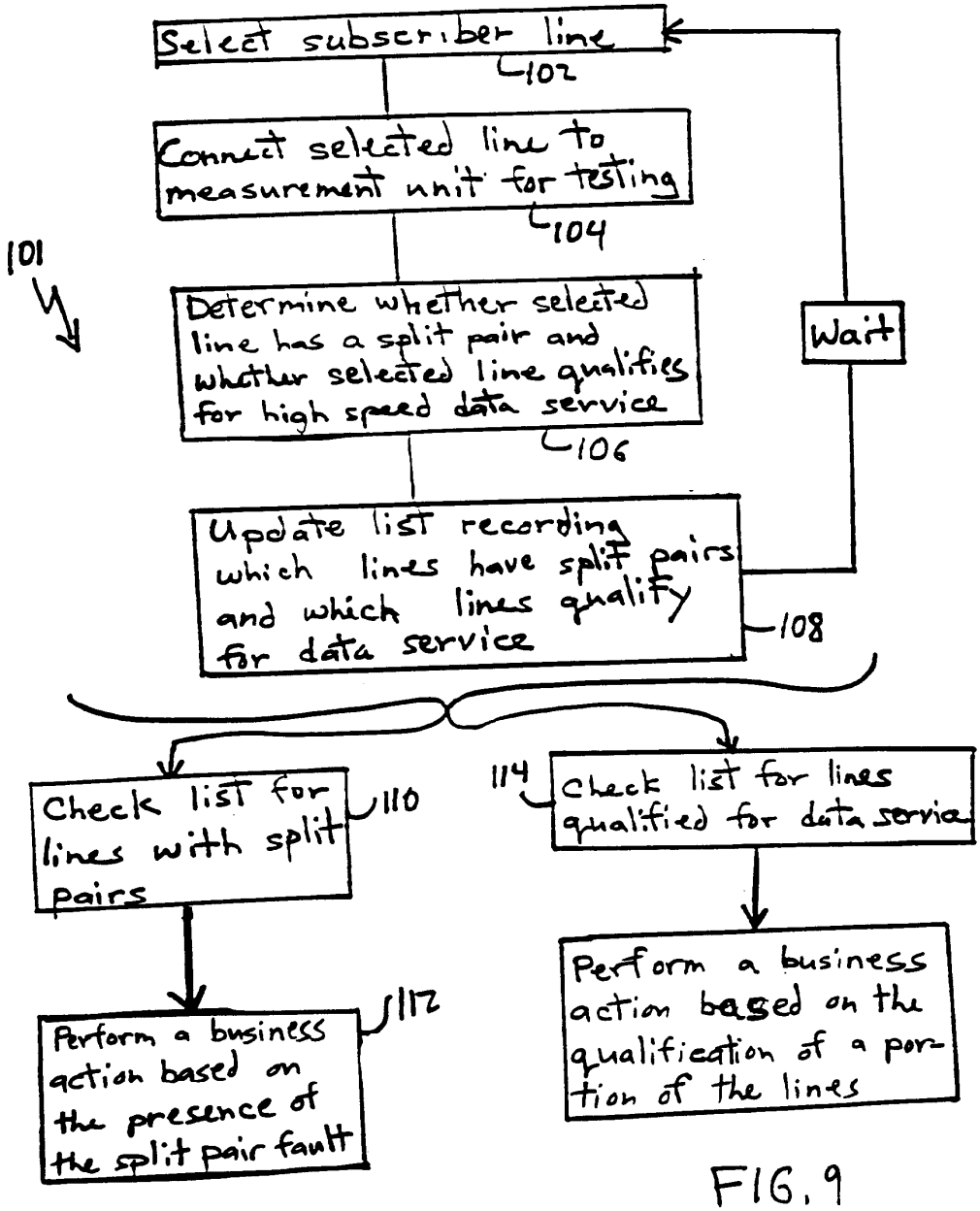
Select subscriber line
102
Connect selected line to measurement unit for testing
104
101
Determine whether selected line has a split pair and whether selected line qualifies for high speed data service
106
Wait
Update list recording which lines have split pairs and which lines qualify for data service
108
Check list for lines with split pairs
110
114
Check list for lines qualified for data servia
Perform a business action based on the presence of the split pair fault
112
Perform a business action based on the qualification of a portion of the lines

FIG. 9

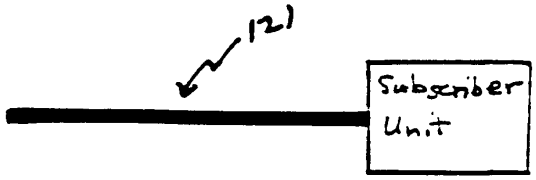

FIG. 10 A

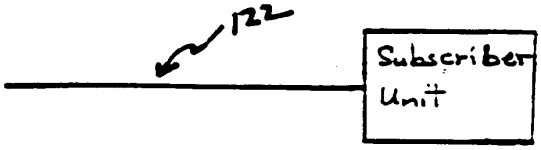

FIG. 10 B

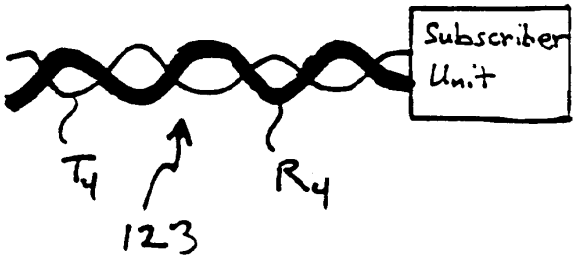

FIG. 10 C

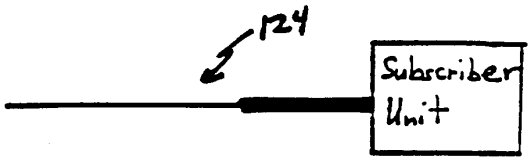

FIG. 10 D

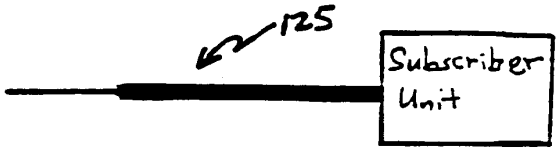

FIG. 10 E

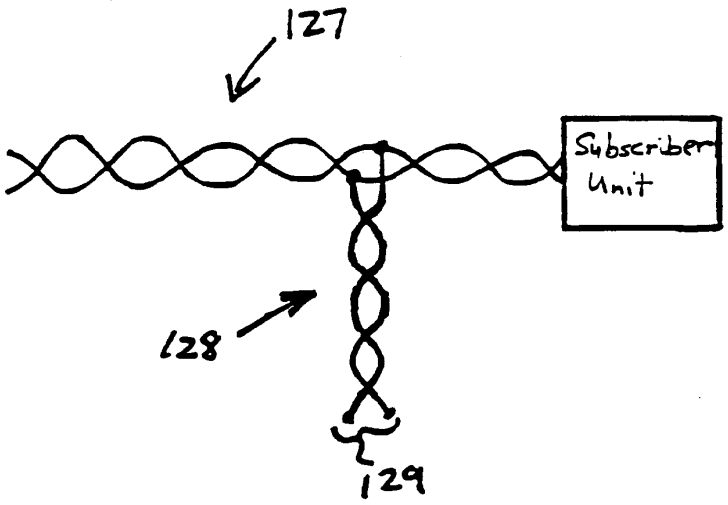

FIG. 11

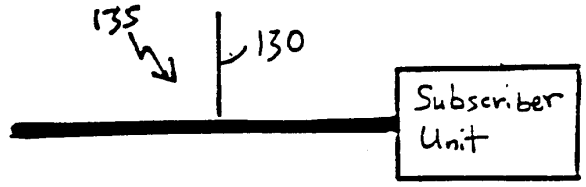

FIG. 12 A

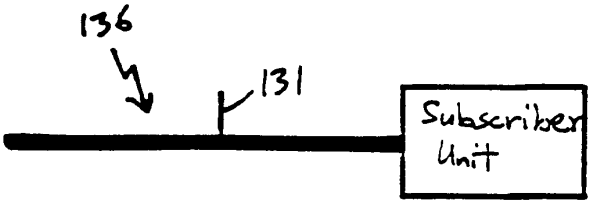

FIG. 12 B

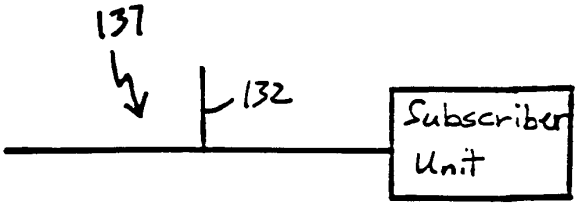

FIG. 12 C

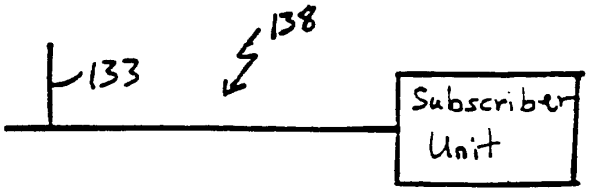

FIG. 12 D

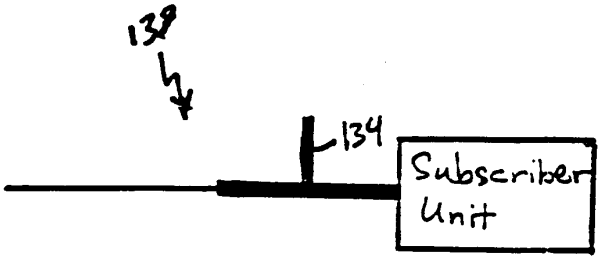

FIG. 12 E

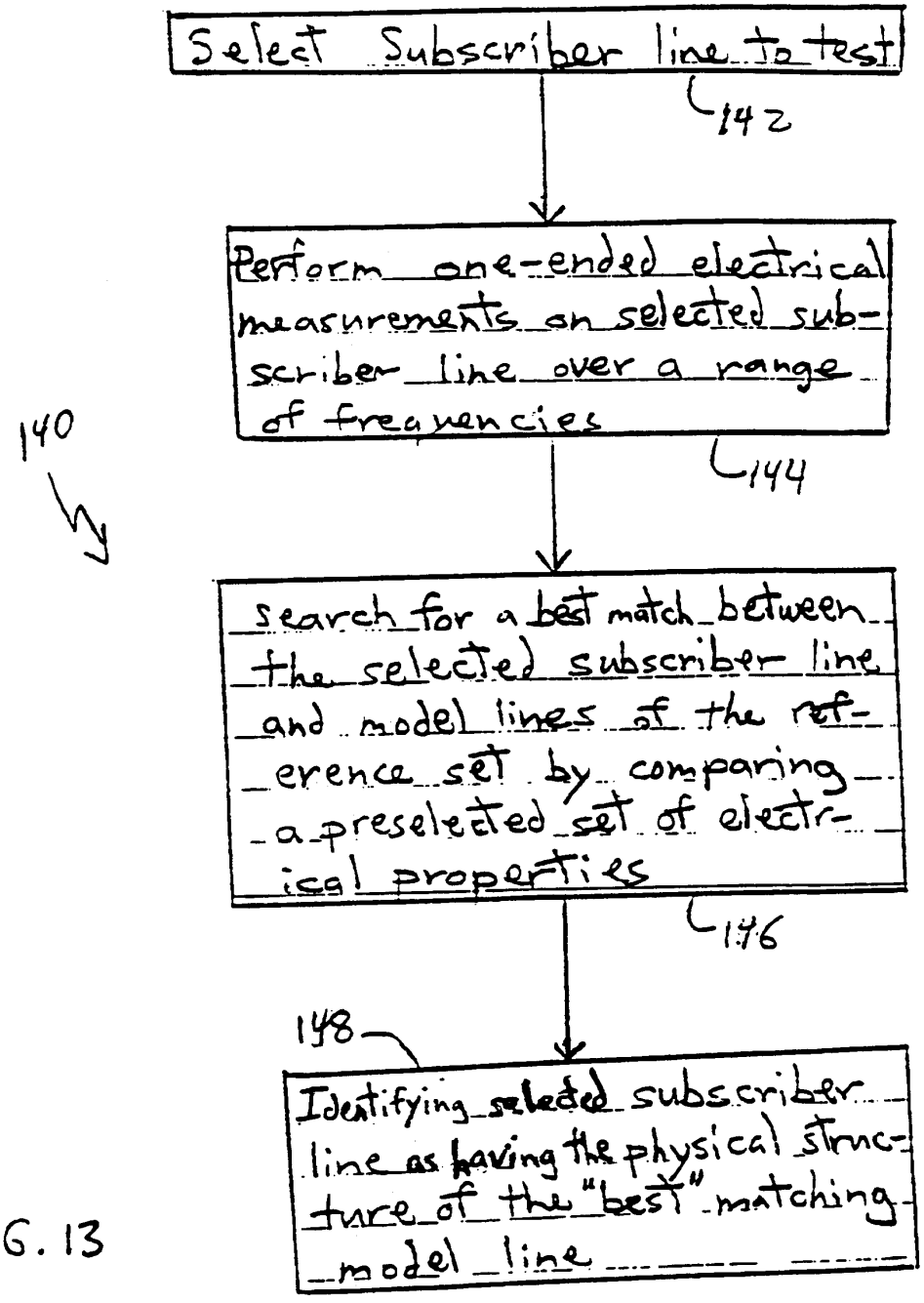
Select Subscriber line to test
142
Perform one-ended electrical measurements on selected subscriber line over a range of frequencies
144
140
search for a best match between the selected subscriber line and model lines of the reference set by comparing a preselected set of electrical properties
146
148
Identifying selected subscriber line as having the physical structure of the "best" matching model line

FIG. 13

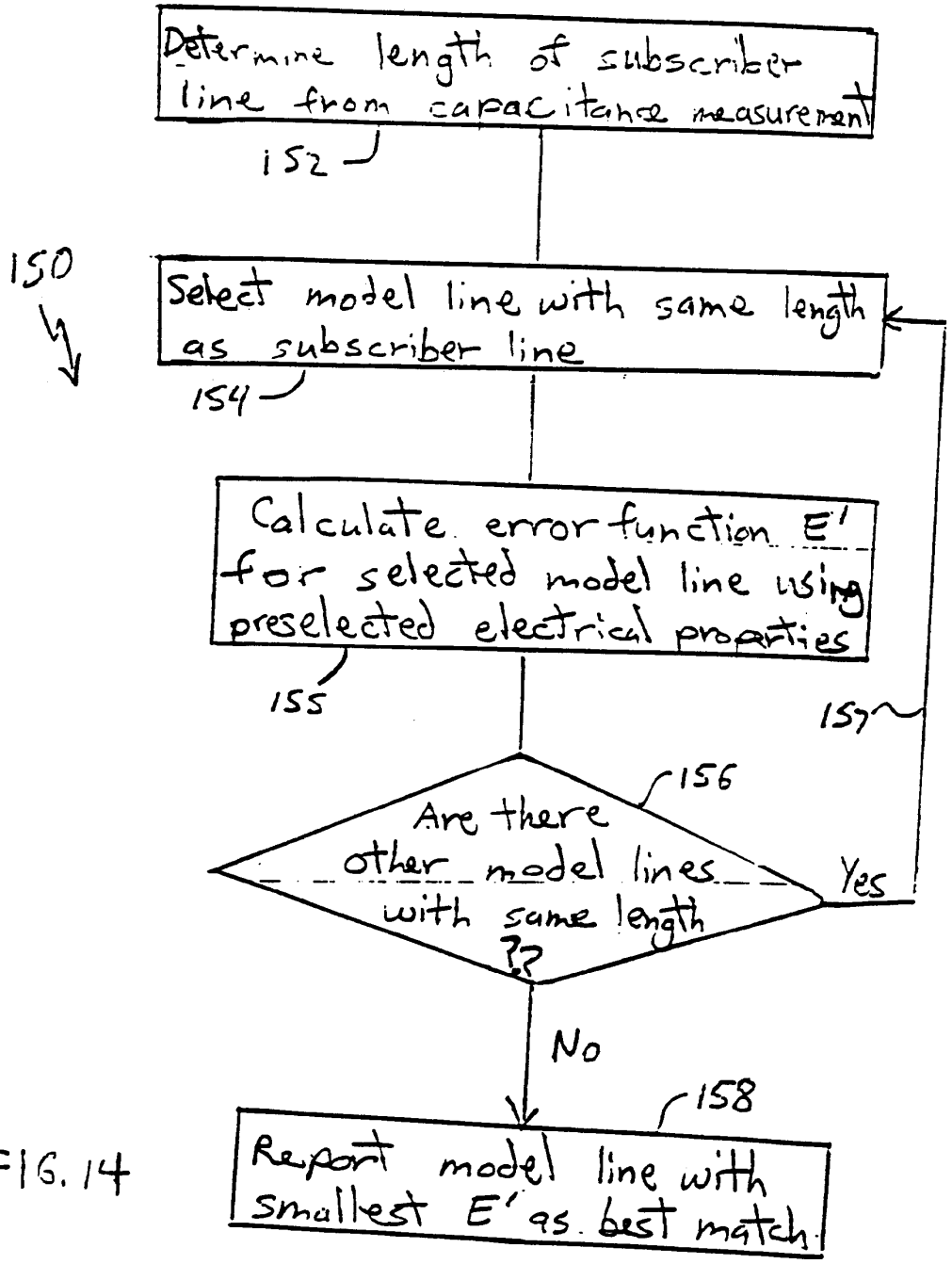
Determine length of subscriber line from capacitance measurement
152
150
Select model line with same length as subscriber line
154
Calculate error function E' for selected model line using preselected electrical properties
155
157
156
Are there other model lines with same length ??
Yes
No
158
Report model line with smallest E' as best match

FIG. 14

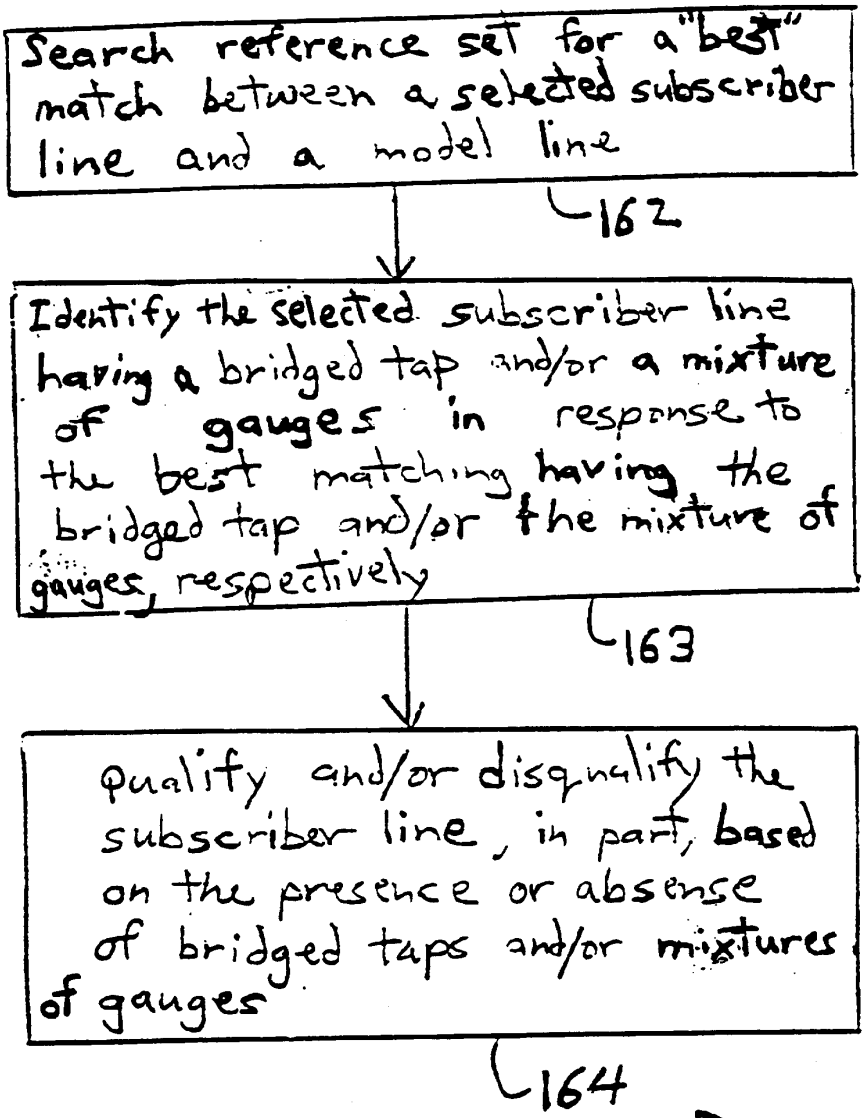
Search reference set for a "best" match between a selected subscriber line and a model line
162
Identify the selected subscriber line having a bridged tap and/or a mixture of gauges in response to the best matching having the bridged tap and/or the mixture of gauges, respectively
163
Qualify and/or disqualify the subscriber line, in part, based on the presence or absense of bridged taps and/or mixtures of gauges
164
160

FIG. 15

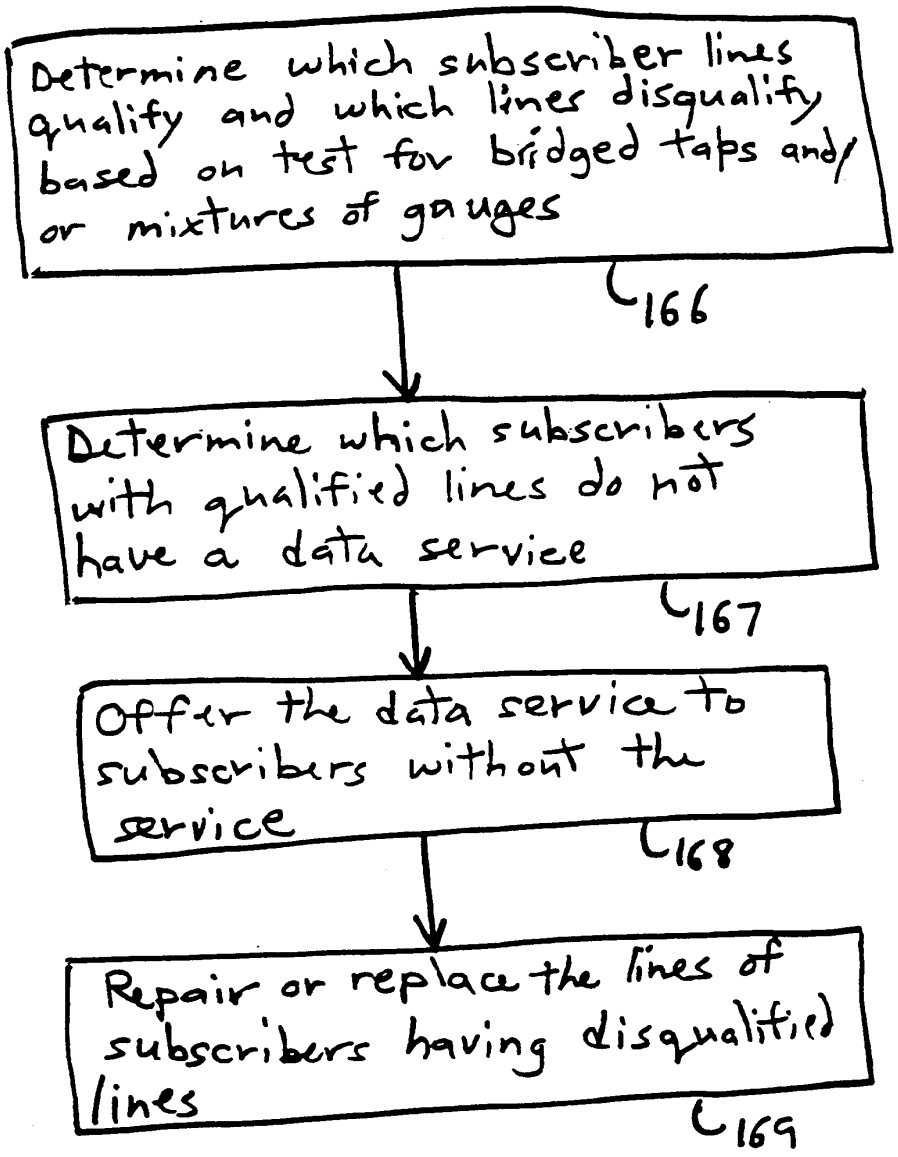
Determine which subscriber lines qualify and which lines disqualify based on test for bridged taps and/or mixtures of gauges
166
Determine which subscribers with qualified lines do not have a data service
167
Offer the data service to subscribers without the service
168
Repair or replace the lines of subscribers having disqualified lines
169
165

FIG. 16

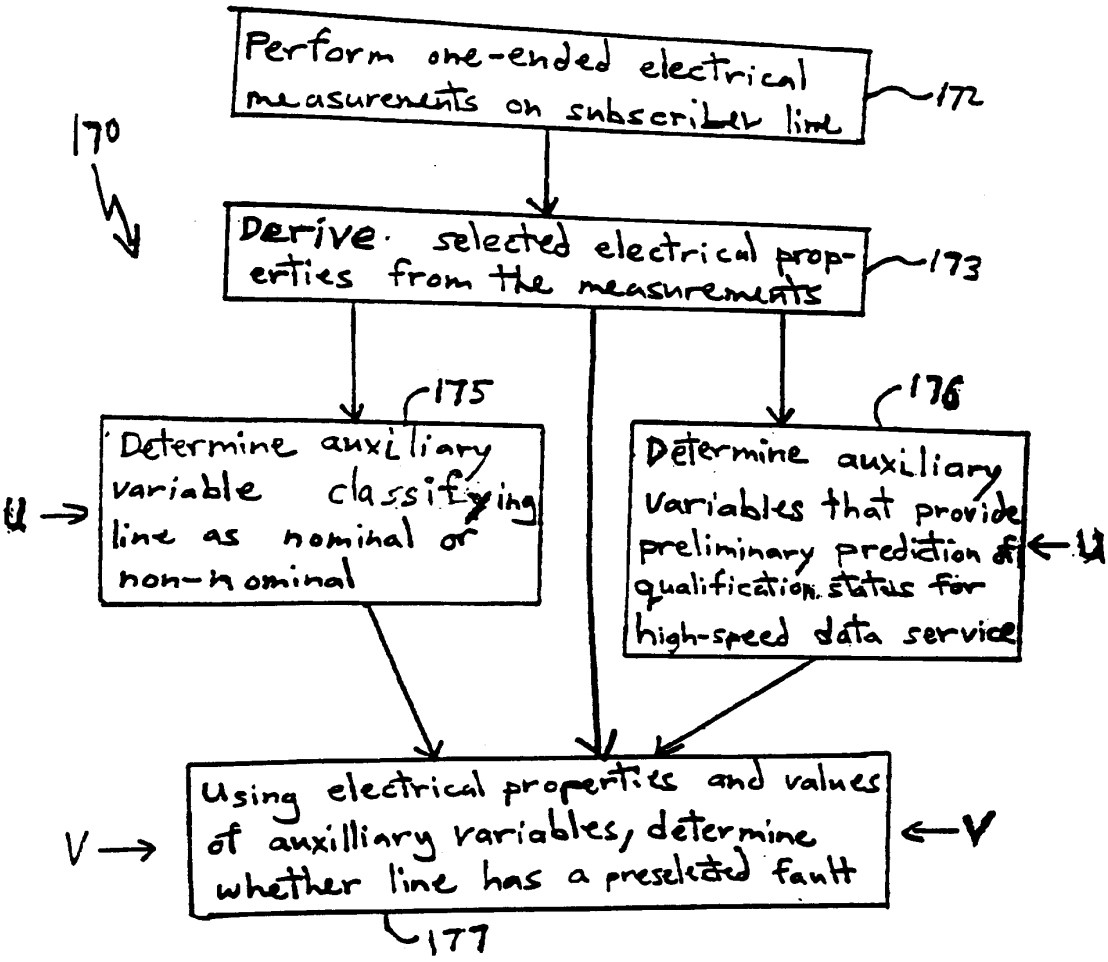
Perform one-ended electrical measurements on subscriber line
172
170
Derive selected electrical properties from the measurements
173
175
176
Determine auxiliary variable classifying line as nominal or non-nominal
U
Determine auxiliary variables that provide preliminary prediction of qualification status for high-speed data service
U
Using electrical properties and values of auxilliary variables, determine whether line has a preselected fault
V
V
177

FIG. 17

FIG. 18A

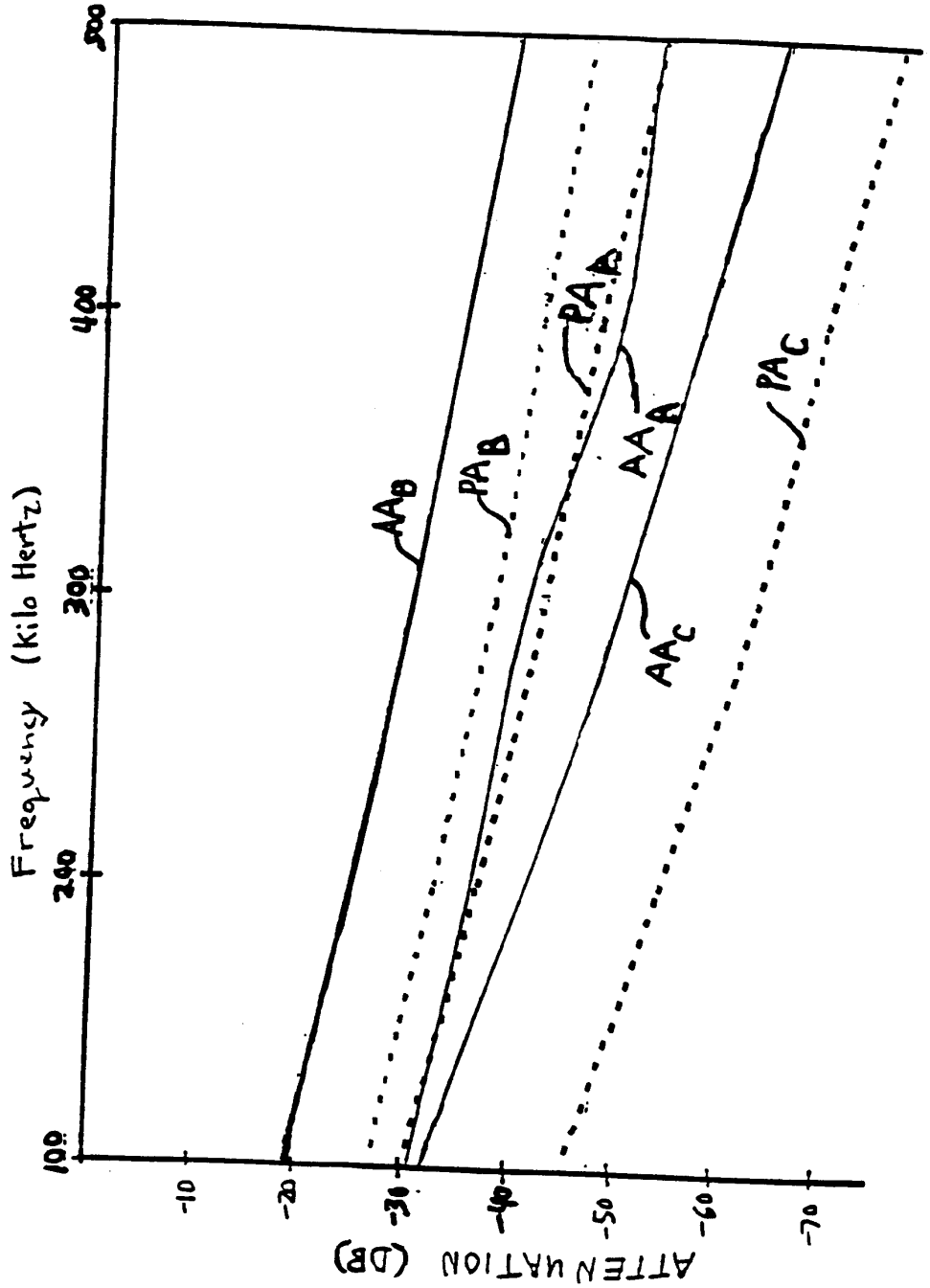
Frequency (Kilo Hertz)
500
400
300
240
100
-10
-20
-30
-40
-50
-60
-70
ATTENUATION (DB)
AA_B
PA_B
PA_A
AA_A
AA_C
PA_C

FIG. 18B

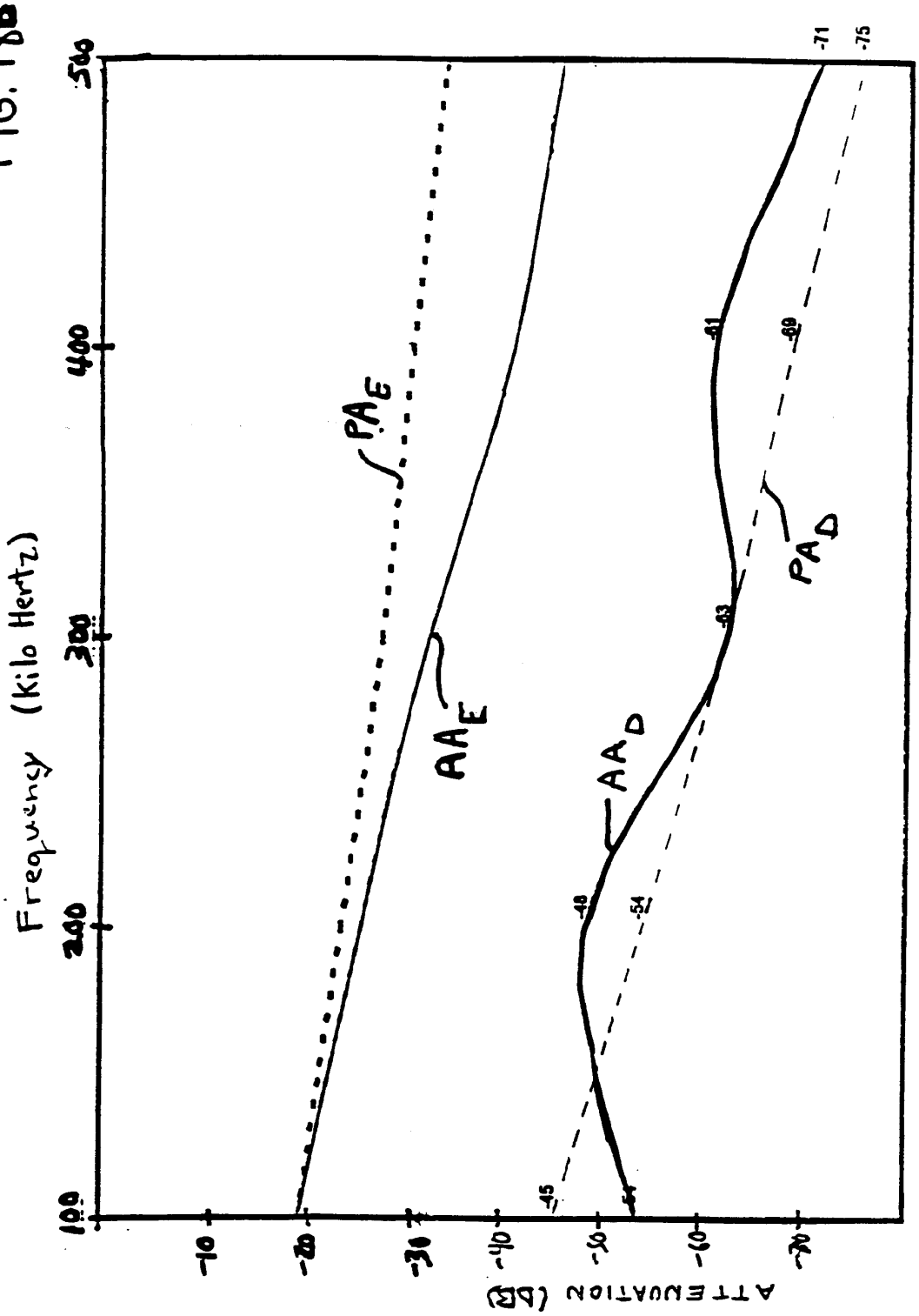
Frequency (Kilo Hertz)
100
200
300
400
500
ATTENUATION (DB)
-10
-20
-30
-40
-50
-60
-70
PA_E
AA_E
AA_D
PA_D
-71
-75
-61
-69
-63
-48
-54
-45

FIG. 18C

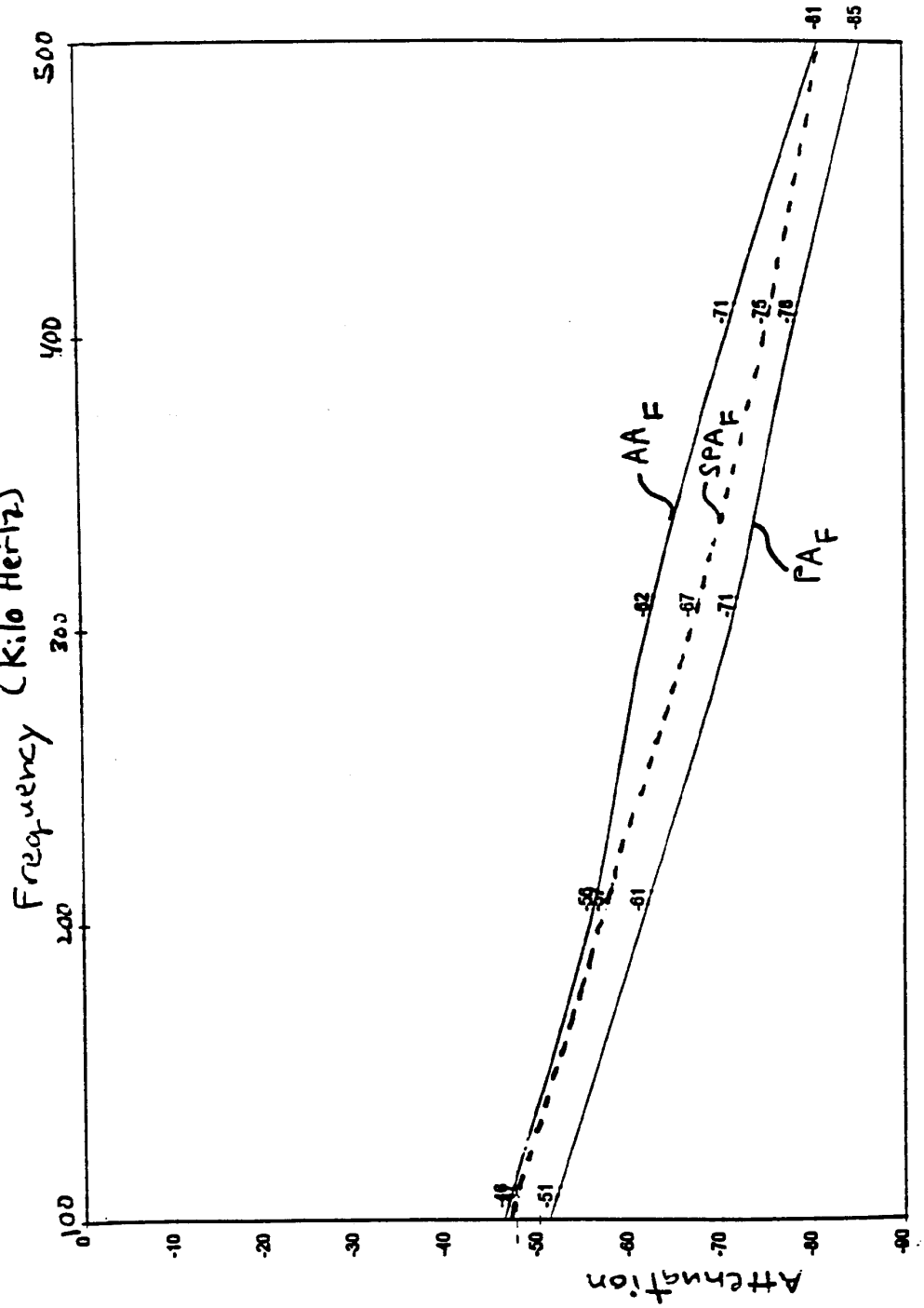
Frequency (Kilo Hertz)
100
200
300
400
500
0
-10
-20
-30
-40
-50
-60
-70
-80
-90
Attenuation
AA_F
SPA_F
PA_F
-91
-85
-71
-75
-78
-82
-67
-71
-59
-61
-51

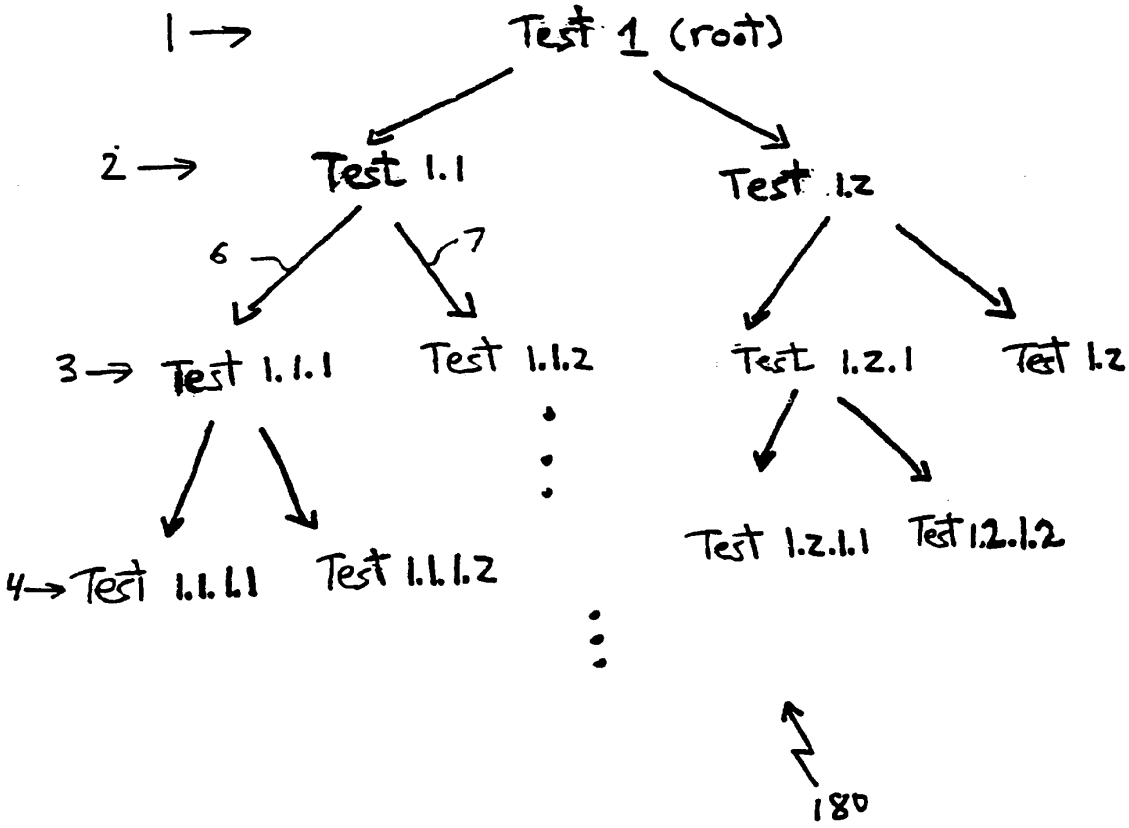
1
Test 1 (root)
2
Test 1.1
Test 1.2
6
7
3
Test 1.1.1
Test 1.1.2
Test 1.2.1
Test 1.2
4
Test 1.1.1.1
Test 1.1.1.2
Test 1.2.1.1
Test 1.2.1.2
180

FIG. 19

FIG. 20

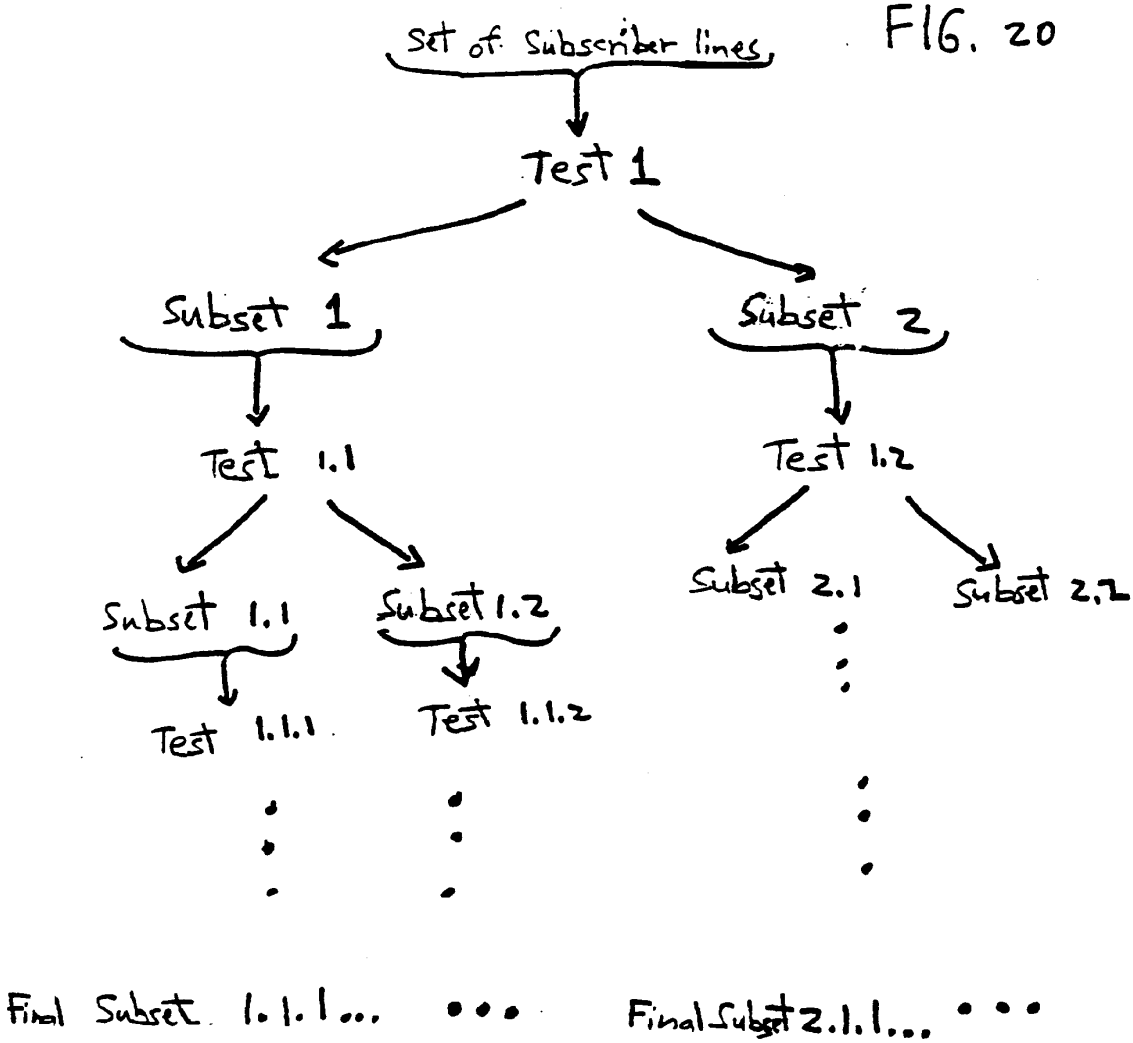
Set of Subscriber lines
Test 1
Subset 1
Subset 2
Test 1.1
Test 1.2
Subset 1.1
Subset 1.2
Subset 2.1
Subset 2.2
Test 1.1.1
Test 1.1.2
Final Subset 1.1.1...
Final Subset 2.1.1...

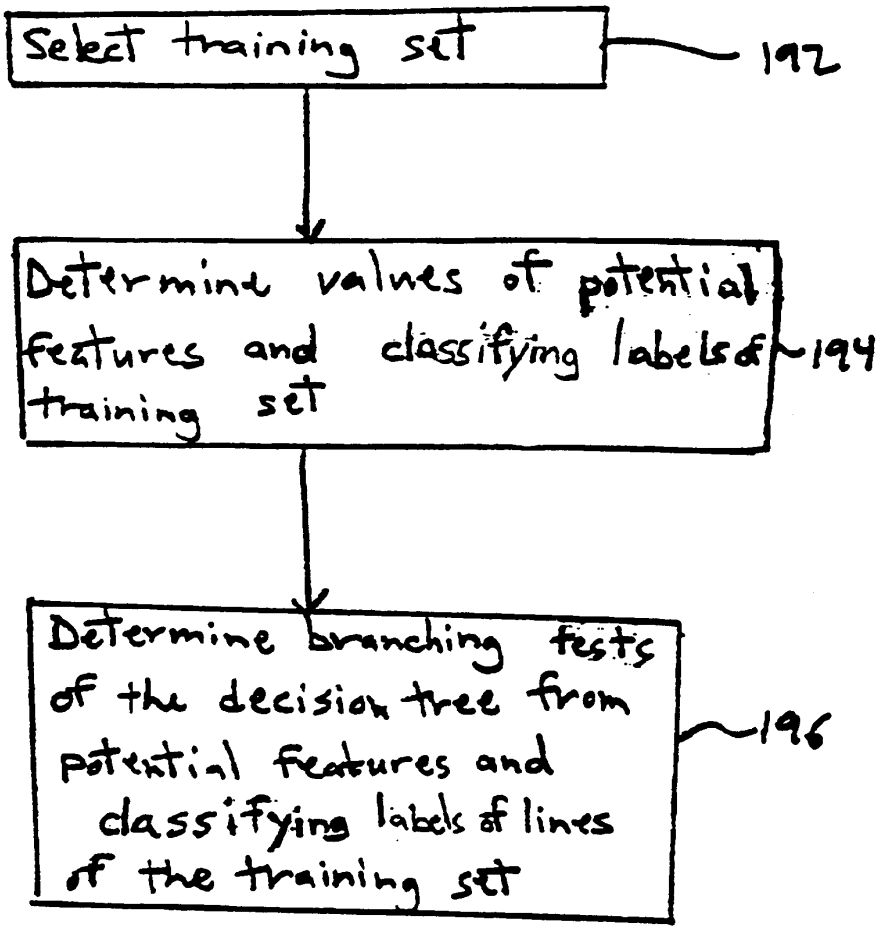
Select training set
192
Determine values of potential features and classifying labels of training set
194
Determine branching tests of the decision tree from potential features and classifying labels of lines of the training set
196
190

FIG. 21

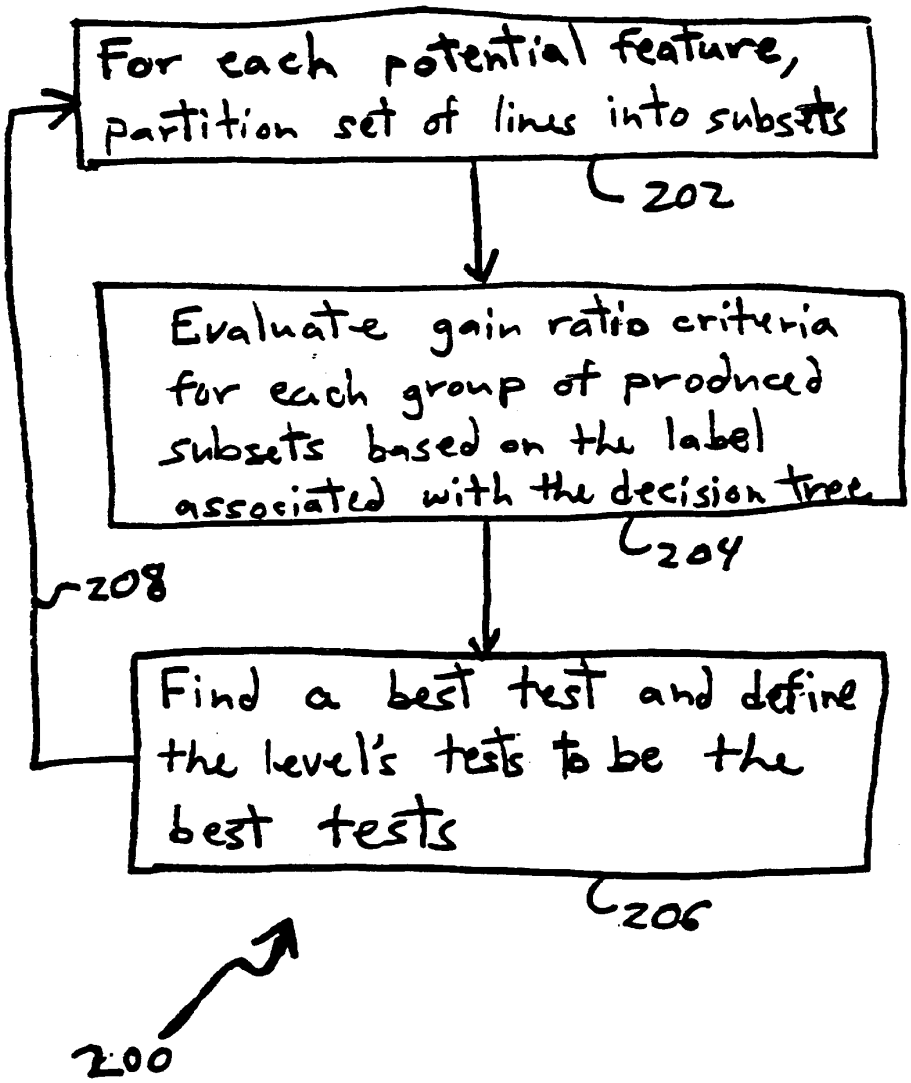
For each potential feature, partition set of lines into subsets
202
Evaluate gain ratio criteria for each group of produced subsets based on the label associated with the decision tree
204
208
Find a best test and define the level's tests to be the best tests
206
200

FIG. 22

PCT WORLD INTELLECTUAL PROPERTY ORGANIZATION
International Bureau

INTERNATIONAL APPLICATION PUBLISHED UNDER THE PATENT COOPERATION TREATY (PCT)

(51) International Patent Classification 4 : **H04M 11/00, H04B 15/00, 1/10 H04L 5/00, 25/08, H04B 1/10**	**A1**	**(11) International Publication Number:** **WO 86/ 07223** **(43) International Publication Date:** 4 December 1986 (04.12.86)

(21) International Application Number: PCT/US86/00983
(22) International Filing Date: 5 May 1986 (05.05.86)
(31) Priority Application Number: 736,200
(32) Priority Date: 20 May 1985 (20.05.85)
(33) Priority Country: US

(71) Applicant: TELEBIT CORPORATION [US/US]; 10440 Bubb Road, Cupertino, CA 95014 (US).

(72) Inventor: HUGHES-HARTOGS, Dirk ; 2220 Rolling Hills Drive, Morgan Hill, CA 95037 (US).

(74) Agent: ALLEN, Kenneth, R.; Townsend and Townsend, One Market Plaza, San Francisco, CA 94105 (US).

(81) Designated States: AT (European patent), AU, BE (European patent), BR, CH (European patent), DE (European patent), DK, FR (European patent), GB (European patent), IT (European patent), JP, KR, LU (European patent), NL (European patent), NO, SE (European patent).

Published
With international search report.

(54) Title: ENSEMBLE MODEM STRUCTURE FOR IMPERFECT TRANSMISSION MEDIA

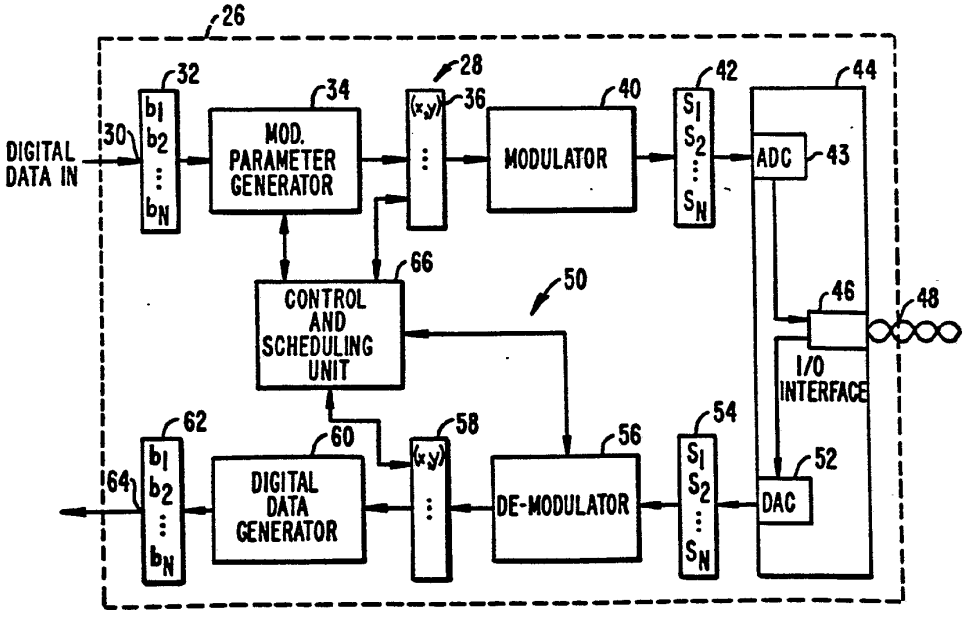

(57) Abstract

A high speed modem (26) that transmits and receives digital data on an ensemble of carrier frequencies spanning the usable band of a dial-up telephone line (48). The modem includes a system (30, 32, 34, 36, 40, 43, 44) for variably allocating data and power among the carriers to compensate for equivalent noise and to maximize the data rate. Additionally, systems for eliminating the need for an equalization network, for adaptively allocating control of a channel, and for tracking variations in line parameters are disclosed.

FOR THE PURPOSES OF INFORMATION ONLY

Codes used to identify States party to the PCT on the front pages of pamphlets publishing international applications under the PCT.

AT	Austria	**GA**	Gabon	**MR**	Mauritania
AU	Australia	**GB**	United Kingdom	**MW**	Malawi
BB	Barbados	**HU**	Hungary	**NL**	Netherlands
BE	Belgium	**IT**	Italy	**NO**	Norway
BG	Bulgaria	**JP**	Japan	**RO**	Romania
BR	Brazil	**KP**	Democratic People's Republic of Korea	**SD**	Sudan
CF	Central African Republic			**SE**	Sweden
CG	Congo	**KR**	Republic of Korea	**SN**	Senegal
CH	Switzerland	**LI**	Liechtenstein	**SU**	Soviet Union
CM	Cameroon	**LK**	Sri Lanka	**TD**	Chad
DE	Germany, Federal Republic of	**LU**	Luxembourg	**TG**	Togo
DK	Denmark	**MC**	Monaco	**US**	United States of America
FI	Finland	**MG**	Madagascar		
FR	France	**ML**	Mali		

ENSEMBLE MODEM STRUCTURE FOR IMPERFECT TRANSMISSION MEDIA

BACKGROUND OF THE INVENTION

1. Field of the Invention:

The invention relates generally to the field of data communications and, more particularly, to a high speed modem.

2. Description of the Prior Art:

Recently, specially designed telephone lines for the direct transmission of digital data have been introduced. However, the vast majority of telephone lines are designed to carry analog voice frequency (VF) signals. Modems are utilized to modulate VF carrier signals to encode digital information on the VF carrier signals and to demodulate the signals to decode the digital information carried by the signal.

Existing VF telephone lines have several limitations that degrade the performance of modems and limit the rate at which data can be transmitted below desired error rates. These limitations include the presence of frequency dependent noise on the VF telephone lines, a frequency dependent phase delay induced by the VF telephone lines, and frequency dependent signal loss.

Generally, the usable band of a VF telephone line is from slightly above zero to about four kHz. The power spectrum of the line noise is not uniformly distributed over frequency and is generally not determinative. Thus, there is no a priori method for determining the distribution of the noise spectrum over the usable bandwidth of the VF line.

Additionally, a frequency-dependent propagation delay is induced by the VF telephone line. Thus, for a complex multi-frequency signal, a phase delay

between the various components of the signal will be induced by the VF telephone line. Again, this phase delay is not determinative and must be measured for an individual VF telephone line at the specific time that transmission takes place.

Further, the signal loss over the VF telephone line varies with frequency. The equivalent noise is the noise spectrum component added to the signal loss component for each carrier frequency, where both components are measured in decibels (dB).

Generally, prior art modems compensate for equivalent line noise and signal loss by gear-shifting the data rate down to achieve a satisfactory error rate. For example, in U.S. patent 4,438,511, by Baran, a high speed modem designated SM9600 Super Modem manufactured by Gandalf Data, Inc., is described. In the presence of noise impairment, the SM9600 will "gear shift" or drop back its transmitted data rate to 4800 bps or 2400 bps. The system described in the Baran patent transmits data over 64 orthogonally modulated carriers. The Baran system compensates for the frequency dependent nature of the noise on the VF line by terminating transmission on carriers having the same frequency as the frequency of large noise components on the line. Thus, Baran gracefully degrades its throughput by ceasing to transmit on carrier frequencies at the highest points of the VF line noise spectrum. The Baran system essentially makes a go/no go decision for each carrier signal, depending on the distribution of the VF line noise spectrum. This application reflects a continuation of the effort initiated by Baran.

Most prior art systems compensate for frequency dependent phase delay induced by the VF line by an equalization system. The largest phase delay is induced in frequency components near the edges of the usable band. Accordingly, the frequency components near the center of the band are delayed to allow the

frequency components at the outside of the band to catch up. Equalization generally requires additional circuitry to accomplish the above-described delays.

A further problem associated with two way transmission over the VF telephone line is that interference between the outgoing and incoming signals is possible. Generally, separation and isolation between the two signals is achieved in one of three ways:

(a) Frequency multiplexing in which different frequencies are used for the different signals. This method is common in modem-based telecommunication systems.

(b) Time multiplexing, in which different time segments are used for the different signals. This method is often used in half-duplex systems in which a transmitter relinquishes a channel only after sending all the data it has. And,

(c) Code multiplexing, in which the signals are sent using orthogonal codes.

All of the above-described systems divide the space available according to constant proportions fixed during the initial system design. These constant proportions, however, may not be suitable to actual traffic load problem presented to each modem. For example, a clerk at a PC work station connected to a remote host computer may type ten or twenty characters and receive a full screen in return. In this case, constant proportions allocating the channel equally between the send and receive modems would greatly overallocate the channel to the PC work station clerk. Accordingly, a modem that allocates channel capacity according to the needs of the actual traffic load situation would greatly increase the efficient utilization of the channel capacity.

SUMMARY OF THE INVENTION

The present invention is a high-speed modem for use with dial-up VF telephone lines. The modem utilizes a multicarrier modulation scheme and variably allocates data and power to the various carriers to maximize the overall data transmission rate. The allocation of power among the carriers is subject to the constraint that the total power allocated must not exceed a specified limit.

In a preferred embodiment, the modem further includes a variable allocation system for sharing control of a communication link between two modems (A and B) according to actual user requirements.

Another aspect of the invention is a system for compensating for frequency dependent phase delay and preventing intersymbol interference that does not require an equalization network.

According to one aspect of the invention, quadrature amplitude modulation (QAM) is utilized to encode data elements of varying complexity on each carrier. The equivalent noise component at each carrier frequency is measured over a communication link between two modems (A and B).

As is known in the art, if the bit error rate (BER) is to be maintained below a specified level, then the power required to transmit a data element of a given complexity on a given carrier frequency must be increased if the equivalent noise component at that frequency increases. Equivalently, to increase data complexity, the signal to noise ratio, S/N, must be increased.

In one embodiment of the present invention, data and power are allocated to maximize the overall data rate within external BER and total available power constraints. The power allocation system computes the marginal required power to increase the symbol rate on each carrier from n to n + 1 information units. The

system then allocates information units to the carrier that requires the least additional power to increase its symbol rate by one information unit. Because the marginal powers are dependent on the values of the equivalent noise spectrum of the particular established transmission link, the allocation of power and data is specifically tailored to compensate for noise over this particular link.

According to another aspect of the invention, a first section of the symbol on each carrier is retransmitted to form a guard-time waveform of duration $T_E + T_{PH}$ where T_E is the duration of the symbol and T_{PH} is the duration of the first section. The magnitude of T_{PH} is greater than or equal to the maximum estimated phase delay for any frequency component of the waveform. For example, if the symbol is represented by the time series, $x_0 \ldots x_{n-1}$, transmitted in time T_E; then the guardtime waveform is represented by the time series, $x_0 \ldots x_{n-1}$, $x_0 \ldots x_{m-1}$, transmitted in time $T_E + T_{PH}$. The ratio that m bears to n is equal to the ratio that T_{PH} bears to T_E.

At the receiving modem, the time of arrival, T_0, of the first frequency component of the guard-time waveform is determined. A sampling period, of duration T_E, is initiated a time $T_0 + T_{PH}$.

Accordingly, the entire symbol on each carrier frequency is sampled and intersymbol interference is eliminated.

According to a still further aspect of the invention, allocation of control to the transmission link between modems A and B is accomplished by setting limits to the number of packets that each modem may transmit during one transmission cycle. A packet of information comprises the data encoded on the ensemble of carriers comprising one waveform. Each modem is also constrained to transmit a minimum number of packets to maintain the communication link between the modems.

Thus, even if one modem has no data to transmit, the minimum packets maintain timing and other parameters are transmitted. On the other hand, if the volume of data for a modem is large, it is constrained to transmit only the maximum limited number of packets, N, before relinquishing control to the other modem.

In practice, if modem A has a small volume of data and modem B has a large volume of data, modem B will have control of the transmission link most of the time. If control is first allocated to modem A it will only transmit the minimal number, I, of packets. Thus A has control for only a short time. Control is then allocated to B which transmits N packets, where N may be very large. Control is again allocated to modem A which transmits I packets before returning control to B.

Thus, allocation of control is proportional to the ratio of I to N. If the transmission of the volume of data on modem A requires L packets, where L is between I and N, then the allocation is proportional to the ratio of L to N. Accordingly, allocation of the transmission link varies according to the actual needs of the user.

Additionally, the maximum number of packets, N, need not be the same for each modem, but may be varied to accommodate known disproportions in the data to be transmitted by A and B modems.

According to another aspect of the invention, signal loss and frequency offset are measured prior to data determination. A tracking system determines variations from the measured values and compensates for these deviations.

According to a further aspect of the invention, a system for determining a precise value of T_0 is included. This system utilizes two timing signals, at f_1 and f_2, incorporated in a waveform transmitted from modem A at time T_A. The relative phase difference

between the first and second timing signals at time T_A is zero.

The waveform is received at modem B and a rough estimate, T_{EST}, of the time of reception is obtained by detecting energy at f_1. The relative phase difference between the timing signals at time T_{EST} is utilized to obtain a precise timing reference, T_0.

BRIEF DESCRIPTION OF THE DRAWINGS

Fig. 1 is a graph of the ensemble of carrier frequencies utilized in the present invention.

Fig. 2 is a graph of the constellation illustrating the QAM of each carrier.

Fig. 3 is a block diagram of an embodiment of the invention.

Fig. 4 is a flow chart illustrating the synchronization process of the present invention.

Fig. 5 is a series of graphs depicting the constellations for 0, 2, 4, 5, 6 bit data elements and exemplary signal to noise ratios and power levels for each constellation.

Fig. 6 is a graph illustrating the waterfilling algorithm.

Fig. 7 is a histogram illustrating the application of the waterfilling algorithm utilized in the present invention.

Fig. 8 is a graph depicting the effects of phase dependent frequency delay on frequency components in the ensemble.

Fig. 9 is a graph depicting the wave forms utilized in the present invention to prevent intersymbol interference.

Fig. 10 is a graph depicting the method of receiving the transmitted ensemble.

Fig. 11 is a schematic diagram depicting the modulation template.

Fig. 12 is a schematic diagram depicting the quadrants of one square in the modulation template.

Fig. 13 is a schematic diagram of a hardware embodiment of the present invention.

DETAILED DESCRIPTION OF THE PREFERRED EMBODIMENTS

The present invention is a modem that adaptively allocates power between various carrier frequencies in a frequency ensemble to compensate for frequency dependent line noise, eliminates the need for equalization circuitry to compensate for a frequency dependent phase delay, and provides a duplex mechanism that accounts for varying channel load conditions to allocate the channel between the send and receive modems. Additional features of the invention are described below.

A brief description of the frequency ensemble and modulation scheme utilized in the present invention is first presented with respect to Figs. 1 and 2 to facilitate the understanding of the invention. A specific embodiment of the invention is then described with reference to Fig. 3. Finally, the operation of various features of the invention are described with reference to Figs. 4 through 13.

Modulation and Ensemble Configuration

Referring now to Fig. 1, a diagrammatic representation is shown of the transmit ensemble 10 of the present invention. The ensemble includes 512 carrier frequencies 12 equally spaced across the available 4 kHz VF band. The present invention utilizes quadrature amplitude modulation (QAM) wherein phase independent sine and cosine signals at each carrier frequency are transmitted. The digital information transmitted at a given carrier frequency is encoded by amplitude modulating the independent sine and cosine signals at that frequency.

The QAM system transmits data at an overall bit rate, R_B. However, the transmission rate on each carrier, denoted the symbol or baud rate, R_S, is only a fraction of R_B. For example, if data were allocated equally between two carriers then $R_S = R_B/2$.

In the preferred embodiment 0, 2, 4, 5 or 6 bit data elements are encoded on each carrier and the modulation of each carrier is changed every 136 msec. A theoretical maximum, R_B, assuming a 6 bit R_S for each carrier, of 22,580 bit/sec (bps) results. A typical relizable R_S, assuming 4 bit R_S over 75% of the carriers, is equal to about 11,300 bps. This extremely high R_S is achieved with a bit error rate of less than 1 error/100,000 bits transmitted.

In Fig. 1, a plurality of vertical lines 14 separates each ensemble into time increments known hereafter as "epochs." The epoch is of duration T_E where the magnitude of T_E is determined as set forth below.

The QAM system for encoding digital data onto the various carrier frequencies will now be described with reference to Fig. 2. In Fig. 2 a four bit "constellation" 20 for the nth carrier is depicted. A four bit number may assume sixteen discrete values. Each point in the constellation represents a vector (x_n, y_n) with x_n being the amplitude of the sine signal and y_n being the amplitude of the cosine signal in the above-described QAM system. The subscript n indicates the carrier being modulated. Accordingly, the four bit constellation requires four discrete y_n and four discrete x_n values. As described more fully below, increased power is required to increase the number of bits transmitted at a given carrier frequency due to the equivalent noise component at that frequency. The receive modem, in the case of four bit transmission, must be able to discriminate between four possible values of the x_n and y_n amplitude coefficients. This

ability to discriminate is dependent on the signal to noise ratio for a given carrier frequency.

In a preferred embodiment, packet technology is utilized to reduce the error rate. A packet includes the modulated epoch of carriers and error detection data. Each packet in error is retransmitted until correct. Alternatively, in systems where retransmission of data is undesirable, epochs with forward error correcting codes may be utilized.

Block Diagram

Fig. 3 is a block diagram of an embodiment of the present invention. The description that follows is of an originate modem 26 coupled to an originate end of a communication link formed over a public switched telephone line. It is understood that a communication system also includes an answer modem coupled to the answer end of the communication link. In the following discussion, parts in the answer modem corresponding to identical or similar parts in the originate modem will be designated by the reference number of the originate modem primed.

Referring now to Fig. 3, an incoming data stream is received by a send system 28 of the modem 26 at data input 30. The data is stored as a sequence of data bits in a buffer memory 32. The output of buffer memory 32 is coupled to the input of a modulation parameter generator 34. The output of the modulation parameter generator 34 is coupled to a vector table buffer memory 36 with the vector table buffer memory 36 also coupled to the input of a modulator 40. The output of the modulator 40 is coupled to a time sequence buffer 42 with the time sequence buffer 42 also coupled to the input of a digital-to-analog converter 43 included in an analog I/O interface 44. The interface 44 couples the output of the modem to the public switched telephone lines 48.

A receive system 50 includes an analog-to-digital converter (ADC) 52 coupled to the public switched telephone line 48 and included in the interface 44. The output from the ADC 52 is coupled to a receive time series buffer 54 which is also coupled to the input of a demodulator 56. The output of the demodulator 56 is coupled to a receive vector table buffer 58 which is also coupled to the input of a digital data generator 60. The digital data generator 60 has an output coupled to a receive data bit buffer 62 which is also coupled to an output terminal 64.

A control and scheduling unit 66 is coupled with the modulation parameter generator 34, the vector table buffer 36, the demodulator 56, and the receive vector table buffer 58.

An overview of the functioning of the embodiment depicted in Fig. 3 will now be presented. Prior to the transmission of data, the originate modem 26, in cooperation with the answer modem 26', measures the equivalent noise level at each carrier frequency, determines the number of bits per epoch to be transmitted on each carrier frequency, and allocates power to each carrier frequency as described more fully below.

The incoming data is received at input port 30 and formatted into a bit sequence stored in the input buffer 32.

The modulator 34 encodes a given number of bits into an (x_n, y_n) vector for each carrier frequency utilizing the QAM system described above. For example, if it were determined that four bits were to be transmitted at frequency f_n then four bits from the bit stream would be converted to one of the sixteen points in the four bit constellation of Fig. 2. Each of these constellation points corresponds to one of sixteen possible combinations of four bits. The amplitudes of the sine and cosine signals for frequency n then corresponds to the point in the constellation encoding the four bits

of the bit sequence. The (x_n,y_n) vectors are then stored in the vector buffer table 36. The modulator receives the table of (x_n,y_n) vectors for the carriers in the ensemble and generates a digitally encoded time series representing a wave form comprising the ensemble of QAM carrier frequencies.

In a preferred embodiment the modulator 40 includes a fast Fourier transform (FFT) and performs an inverse FFT operation utilizing the (x,y) vectors as the FFT coefficients. The vector table includes 1,024 independent points representing the 1,024 FFT points of the 512 frequency constellation. The inverse FFT operation generates 1,024 points in a time series representing the QAM ensemble. The 1,024 elements of this digitally encoded time series are stored in the digital time series buffer 42. The digital time sequence is converted to an analog wave form by the analog to digital converter 43 and the interface 46 conditions the signal for transmission over the public switched telephone lines 48.

Turning now to the receive system 50, the received analog waveform from the public switched telephone lines 48 is conditioned by the interface 46 and directed to the analog to digital converter 52. The analog to digital converter 52 converts the analog waveform to a digital 1,024 entry time series table which is stored in the receive time series buffer 54. The demodulator 56 converts the 1,024 entry time series table into a 512 entry (x_n, y_n) vector table stored in the receive vector table buffer 58. This conversion is accomplished by performing an FFT on the time series. Note that information regarding the number of bits encoded onto each frequency carrier has been previously stored in the demodulator and digital data generator 60 so that the (x,y) table stored in the receive vector table buffer 58 may be transformed to an output data bit sequence by the digital data generator 60. For

example, if the (x_n, y_n) vector represents a four bit sequence then this vector would be converted to a four bit sequence and stored in the receive data bit buffer 62 by the digital data generator 60. The receive data bit sequence is then directed to the output 64 as an output data stream.

A full description of the FFT techniques utilized is described in a book by Rabiner et al., entitled Theory and Applications of Digital Signal Processing, Prentice-Hall, Inc., N.J., 1975. However, the FFT modulation technique described above is not an integral part of the present invention. Alternatively, modulation could be accomplished by direct multiplication of the carrier tones as described in the above-referenced Baran patent, which is hereby incorporated by reference, at col. 10, lines 13-70, and col. 11, lines 1-30. Additionally, the demodulation system described in Baran at col. 12, lines 35-70, col. 13, lines 1-70, and col. 14, lines 1-13 could be substituted.

The control and scheduling unit 66 maintains overall supervision of the sequence of operations and controls input and output functions.

Determination of Equivalent Noise

As described above, the information content of the data element encoded on each frequency carrier and the power allocated to that frequency carrier depends on the magnitude of the channel noise component at that carrier frequency. The equivalent transmitted noise component at frequency f_n, $N(f_n)$, is the measured (received) noise power at frequency f_n multiplied by the measured signal loss at frequency f_n. The equivalent noise varies from line to line and also varies on a given line at different times. Accordingly, in the present system, N(f) is measured immediately prior to data transmission.

The steps of a synchronization technique utilized in the present system to measure N(f) and

establish a transmission link between answer and originate modems 26 and 26' are illustrated in Fig. 4. Referring now to Fig. 4, in step 1 the originate modem dials the number of the answer modem and the answer modem goes off hook. In step 2 the answer modem transmits an epoch of two frequencies at the following power levels:

(a) 1437.5 Hz. at -3 dBR; and

(b) 1687.5 Hz at -3 dBR.

The power is measured relative to a reference, R, where, in a preferred embodiment, 0dBR = -9dBm, m being a millivolt. These tones are used to determine timing and frequency offset as detailed subsequently.

The answer modem then transmits an answer comb containing all 512 frequencies at -27dBR. The originate modem receives the answer comb and performs an FFT on the comb. Since the power levels of the 512 frequencies were set at specified values, the control and scheduling unit 66 answer modem 26 compares the (x_n, y_n) values for each frequency of the received code and compares those values to a table of (x_n, y_n) values representing the power levels of the transmitted answer code. This comparison yields the signal loss at each frequency due to the transmission over the VF telephone lines.

During step 3 both the originate and answer modems 26 and 26' accumulate noise data present on the line in the absence of any transmission by either modem. Both modems then perform an FFT on the accumulated noise signals to determine the measured (received) noise spectrum component values at each carrier frequency. Several epochs of noise may be averaged to refine the measurement.

In step 4 the originate modem transmits an epoch of two frequencies followed by an originate comb of 512 frequencies with the same power levels described above for step 2. The answer modem receives the epoch and the originate comb and calculates the timing, fre-

quency offset and signal loss values at each carrier frequency as described above for the originate modem in step 2. At this point the originate modem 26 has accumulated noise and signal loss data for transmission in the answer originate direction while the answer modem has accumulated the same data relating to transmission in the originate answer direction. Each modem requires data relating to transmission loss and receive noise in both the originate-answer and answer-originate directions. Therefore, this data is exchanged between the two modems according to the remaining steps of the synchronization process.

In step 5 the originate modem generates and transmits a first phase encoded signal indicating which carrier frequencies will support two bit transmission at standard power levels in the answer-originate direction. Each component that will support two bits in the answer-originate direction at a standard power level is generated as a -28 dBR signal with 180° relative phase. Each component that will not support two bit transmission in the answer-originate direction at the standard power level is coded as a -28 dBR,0° relative phase signal. The answer modem receives this signal and determines which frequency carriers will support two bit transmission in the answer-originate direction.

In step 6 the answer modem generates and transmits a second phase encoded signal indicating which carrier frequencies will support two bit transmission in both the originate-answer and answer-originate directions. The generation of this signal is possible because the answer modem has accumulated noise and signal loss data in the originate-answer direction and has received the same data for the answer-originate direction in the signal generated by the originate modem in step 5. In the signal generated by the originate modem, each frequency component that will support two bits in both directions is coded with 180° relative

phase and all other components are coded with 0° relative phase.

A transmission link now exists between the two modems. In general, 300 to 400 frequency components will support two bit transmission at a standard power level, thereby establishing about a 600 bit/epoch rate between the two modems. In step 7 the originate modem sends data on the number of bits (0 to 15) and the power levels (0 to 63dB) that can be supported on each frequency in the answer-originate direction in ensemble packets formed over this existing data link. Accordingly, both the originate and answer modem now have the data relating to transmission in the answer-originate direction. The steps for calculating the number of bits and power levels that can be supported on each frequency component will be described below.

In step 8 the answer modem sends data on the number of bits and power levels that can be supported on each frequency in the originate-answer direction utilizing the existing data link. Thus, both modems are apprised of the number of bits and power levels to be supported on each frequency component in both the answer-originate and originate-answer directions.

The above description of the determination of the equivalent noise level component at each carrier frequency sets forth the required steps in a given sequence. However, the sequence of steps is not critical and many of the steps may be done simultaneously or in different order, for example, the performance of the FFT on the originate code and the accumulation of noise data may be done simultaneously. A precise timing reference is also calculated during the synchronization process. The calculation of this timing reference will be described more fully below after the description of the method for calculating the number of bits and power levels allocated to each frequency component.

It is a common VF telephone line impairment that a frequency offset, of up to 7 Hz, exists between transmitted and received signals. This offset must be corrected for the FFT to function reliably. In a preferred embodiment, this correction is achieved by performing a single sideband modulation of the quadrature tones at the offset frequency by the true and Hilbert images of received signal. Synchronization and tracking algorithms generate estimates of the frequency offset necessary.

Power and Code Complexity Allocation

The information encoded on each carrier frequency signal is decoded at the receiver channel by the demodulator 56. Channel noise distorts the transmitted signal and degrades the accuracy of the demodulation process. The transmission of a data element having a specified complexity, e.g., B_0 bits at a specified frequency, f_0, over a VF telephone line characterized by an equivalent noise level component, N_0, will now be analyzed. Generally, external system requirements determine a maximum bit error rate (BER) that can be tolerated. For the transmission of b_0 bits at noise level N_0 and frequency f_0, the signal to noise ratio must exceed E_b/N_0 where E_b is the signal power per bit to maintain the BER below a given BER, $(BER)_0$.

Fig. 5 depicts the QAM constellations for signals of various complexities B. An exemplary signal to noise ratio, E_b/N_0, for each constellation and the power required to transmit the number of bits in the constellation without exceeding $(BER)_0$ is depicted alongside each constellation graph.

A modem operates under the constraint that the total available power placed on the public switched telephone lines may not exceed a value, P_0, set by the telephone companies and government agencies. Thus, signal power may not be increased indefinitely to compensate for line noise. Accordingly, as noise

increases, the complexity of the signals transmitted must be decreased to maintain the required BER.

Most existing modems arbitrarily gear shift the signal complexity down as line noise power increases. For example, one prior art modem reduces the transmitted data rate from a maximum of 9,600 bps to steps of 7,200 bps, 4,800 bps, 2,400 bps, 1,200 bps, and so on until the bit error rate is reduced below a specified maximum. Accordingly, the signal rate is decreased in large steps to compensate for noise. In the Baran patent, the method for reducing the transmission rate takes into account the frequency dependent nature of the noise spectrum. There, each channel carries a preset number of bits at a specified power level. The noise component at each frequency is measured and a decision is made whether to transmit at each carrier frequency. Thus, in Baran, the data rate reduction scheme compensates for the actual distribution of the noise over the available bandwidth.

In the present invention, the complexity of the signal on each frequency carrier and the amount of the available power allocated to each frequency carrier is varied in response to the frequency dependence of the line noise spectrum.

The present system for assigning various code complexities and power levels to the frequency component signals in the ensemble is based on the waterfilling algorithm. The waterfilling algorithm is an information theoretic way of assigning power to a channel to maximize the flow of information across the channel. The channel is of the type characterized by an uneven noise distribution and the transmitter is subject to a power constraint. Fig. 6 provides a visualization of the waterfilling algorithm. Referring now to Fig. 6, power is measured along the vertical axis and frequency is measured along the horizontal axis. The equivalent noise spectrum is represented by the solid line 70 and

the available power is represented by the area of the cross hatched region 72. The name waterfilling comes from the analogy of the equivalent noise function to a series of valleys in a mountain filled with a volume of water representing the assigned power. The water fills the valleys and assumes a level surface. A theoretical description of the waterfilling algorithm is given in the book by Gallagher, entitled Information Theory And Reliable Communication; J. Wiley and Sons, New York, 1968, p. 387.

It must be emphasized that the waterfilling theorem relates to maximizing the theoretical capacity of a channel where the capacity is defined as the maximum of all data rates achievable using different codes, all of which are error correcting, and where the best tend to be of infinite length.

The method utilizing the present invention does not maximize the capacity of the channel. Instead, the method maximizes the amount of information transmitted utilizing the QAM ensemble described above with respect to Fig. 1 and subject to an available power restriction.

An implementation of the waterfilling concept is to allocate an increment of available power to the carrier having the lowest equivalent noise floor until the allocatd power level reaches the equivalent noise level of the second lowest carrier. This allocation requires a scan through the 512 frequencies.

Incremental power is then allocated between the lowest two carriers until the equivalent noise level of the third lowest channel is reached. This allocation level requires many scans through the frequency table and is computationally complex.

The power allocation method used in a preferred embodiment of the present invention is as follows:

(1) Calculate the system noise at the transmitter by measuring the equivalent noise at the receiver and multiplying by transmission loss. This process for measuring these quantities was described above with respect to synchronization and Fig. 4. The system noise components are calculated for each carrier frequency.

(2) For each carrier frequency, calculate the power levels required to transmit data elements of varying complexity (in the present case, 0, 2, 4, 5, 6, and 8 bits). This is accomplished by multiplying the equivalent noise by the signal to noise ratios necessary for transmission of the various data elements with a required BER, for example one error per 100,000 bits. The overall BER is the sum of the signal error rates of each modulated carrier. These signal to noise ratios are available from standard references, and are well-known in the art.

(3) From the calculated required transmission power levels, the marginal required power levels to increase data element complexity are determined. These marginal required power levels are the difference in transmission power divided by the quantitative difference in complexity of the data elements closest in complexity.

(4) For each channel generate a two column table of marginal required power levels and quantitative differences where the units are typically expressed as Watts and bits, respectively.

(5) Construct a histogram by organizing the table of step 4 according to increasing marginal power.

(6) Assign the available transmitter power sequentially over the increasing marginal powers until available power is exhausted.

The power allocation method may be better understood through a simple example. The numbers pre-

sented in the example are not intended to represent parameters encountered in an operating system.

Table 1 sets out the power requirement, P, to transmit a data element of a selected number of bits, N_1, for two carriers A and B at frequencies f_A and f_B.

TABLE 1

Carrier A

N_1	N_2-N_1	P	MP(N_1 to N_2)
0	-	0	-
2	2	4	MP(0to2)=2/bit
4	2	12	MP(2to4)=4/bit
5	1	19	MP(4to5)=7/bit
6	1	29	MP(5to6)=10/bit

Carrier B

N_1	N_2-N_1	P	MP(N_1 to N_2)
0	-	0	-
2	2	6	MP(0to2)=3/bit
4	2	18	MP(2to4)=6/bit
5	1	29	MP(4to5)=11/bit
6	1	44	MP(5to6)=15/bit

The marginal power to increase the complexity from a first number of bits, N_1, to a second number of bits, N_2, is defined by the relationship:

$$MP(N_1 \text{ to } N_2) = \frac{P_2 - P_1}{N_2 - N_1}$$

where P_2 and P_1 are the powers required to transmit data elements of complexity N_2 and N_1. N_2-N_1 is quantitative difference in the complexity of the data elements. It is understood the BER is constrained to remain below a preset limit.

The marginal powers for f_A are less than for f_B because the equivalent noise at f_B, $N(f_B)$, is greater than the equivalent noise at f_A, $N(f_A)$.

The implementation of the allocation scheme for carriers A and B will now be described. Assume that a total number of bits, N_T, are encoded on the ensemble but that no bits have been assigned to carriers A or B. For example, $N(f_A)$ and $N(f_A)$ might be greater than the powers of those carriers already carrying the data.

In this example, the system is to allocate ten remaining available power units between carriers A and B to increase the overall data element complexity by the maximum amount.

To increase N_T by two bits requires that four units of power be allocated if channel A is utilized and that six units of power be allocated in channel B is utilized. This follows because for both channels $N_1 = 0$ and $N_2 = 2$ and MP(0 to 2) = 2/bit for channel A and MP(0 to 2) = 3/bit for channel B. Therefore, the system allocates four units of power to carrier A, encodes a two bit data element on carrier A, increases the overall signal complexity from N_T to $N_T + 2$, and has six remaining available power units.

The next increase of two bits requires six power units because MP(2 to 4) = 4/bit for carrier A and MP(0 to 2) = 3/bit for channel B. Therefore, the system allocates six units of power to carrier B, encodes a two bit data element on carrier B, increases the overall signal complexity from $N_T + 2$ to $N_T + 4$ bits, and has no remaining available power units.

As is now clear, the system "shops" among the various carrier frequencies for the lowest power cost to increase the complexity of the overall ensemble data element.

The allocation system is extended to the full 512 carrier ensemble by first generating the tables of

Table 1 for each carrier during a first pass through the frequencies.

A histogram organizing the calculated marginal required power levels for all the carriers according to increasing power is then constructed. Fig. 7 is a depiction of an exemplary histogram constructed according to the present method.

In Fig. 7 the entire table of marginal powers is not displayed. Instead, the histogram is constructed having a range of 64dB with counts spaced in 0.5dB steps. The quantitative differences between the steps are utilized as counts. Although this approach results in a slight round-off error, a significant reduction in task length is achieved. The method used to construct the histogram is not critical to practicing the invention.

Each count of the histogram has an integer entry representing the number of carriers having a marginal power value equal to the power value at the count. The histogram is scanned from the lowest power level. The integer entry at each count is multiplied by the number of counts and subtracted from the available power. The scan continues until available power is exhausted.

When the scan is completed it has been determined that all marginal power values below a given level, MP(max), are acceptable for power and data allocation. Additionally, if available power is exhausted partially through marginal power level, MP(max), then k additional carriers will be allocated power equal to MP(max + 1).

The system then scans through the ensemble again to allocate power and data to the various carriers. The amount of power allocated to each carrier is the sum of marginal power values for that carrier less than or equal to MP(max). Additionally, an amount of power equal to MP(max + 1) will be allocated if the

k MP(max + 1) values have not been previously allocated.

Timing and Phase Delay Compensation

The reconstruction of (x,y) vector table by the receive system requires 1024 time samples of the received waveform. The bandwidth is about 4kHz so that Nyquist sampling rate about 8000/sec and the time sample offset between samples is 125 microseconds. The total sampling time is thus 128 msec. Similarly, the transmit FFT generates a time series having 1024 entries and the symbol time is 128 msec.

The sampling process requires a timing reference to initiate the sampling. This timing reference is established during synchronization by the following method:

During the synchronization steps defined with reference to Fig. 4, the originate modem detects energy at the 1437.5 Hz frequency component (the first timing signal) in the answer comb at time T_{EST}. This time is a rough measure of the precise time that the first timing frequency component arrives at the receiver and is generally accurate to about 2 msec.

This rough measure is refined by the following steps. The first timing signal and a second timing signal (at 1687.5 Hz) are transmitted with zero relative phase at the epoch mark.

The originate modem compares the phases of the first and second timing signals at time T_{EST}. The 250 Hz frequency difference between the first and second timing signals results in an 11° phase shift between the two signals for each 125 microsecond time sample offset. The first and second timing signals have low relative phase distortion (less than 250 microseconds) due to their location near the center of the band. Accordingly, by comparing the phases of the two timing samples and correcting T_{EST} by the number of

time sampling offsets indicated by the phase difference, a precise timing reference, T_0, can be determined.

A further difficulty relating to timing the sampling process relates to frequency dependent phase delay induced by the VF line. This phase delay typically is on the order of 2 msec, or more, for VF telephone lines. Further, this phase delay is significantly worse near the edges of the 4kHz usable band.

Fig. 8 depicts distribution of the frequency carriers of the ensemble after undergoing frequency dependent phase delay. Referring to Fig. 8, three signals 90, 92, and 94 at frequencies f_0, f_{256}, and f_{512} are depicted. Two symbols, x_i and y_i, of length T_S are transmitted at each frequency. Note that the duration of each symbol is not changed. However, the leading edge of the signals near the edge of the band 92 and 94 are delayed relative to those signals near the center of the band 94.

Additionally, for two sequentially transmitted epochs x_i and y_i the trailing section of the first symbol x_i on signals 92 and 96, near the outer edge of the band will overlap the leading edge of the second symbol y_i on the signal 94 near the center of the band. This overlap results in intersymbol interference.

If the sampling interval is framed to sample a given time interval, T_S, then complete samples of every carrier in the ensemble will not be obtained and signals from other epochs will also be sampled.

Existing systems utilize phase correction (equalization) networks to correct for phase distortion and to prevent intersymbol interference.

The present invention utilizes a unique guard-time format to eliminate the need for an equalization network. This format is illustrated in Fig. 9.

Referring now to Fig. 9, first, second, and third transmitted symbols, represented by time series x_i, y_i, and z_i, respectively, are depicted. The wave-

forms depicted in Fig. 3 are modulated on one of the carriers at frequency f. In this example a symbol time, T_S, of 128 msec. and a maximum phase delay, T_{PH}, of 8 msec are assumed. A guard-time waveform is formed by repeating the first 8 msec. of the symbol. The guard-time waveform defines an epoch of 136 msec. For example, in the first waveform 110, (X_i), the time series of the symbol, $X_0 - X_{1023}$, is first transmitted, then the first 8 msec. of the symbol, $X_0 - X_{63}$, are repeated.

The sampling of the epoch is aligned with the last 128 msec. of the guard-time waveform (relative to the beginning of the guard-time epoch defined by those frequency components which arrive first).

This detection process is illustrated in Fig. 10. In Fig. 10 first and second guard-time waveforms 110 and 112 at f_1, near the center of the band, and f_2, near the edge of the band, are depicted. The frequency component at f_1 is the component of the ensemble that arrives first at the receiver and the component at f_2 arrives last. In Fig. 10 the second waveform 112, at f_2, arrives at the receiver at $T_0 + T_{PH}$, which is 8 msec. after the time, T_0, that the first waveform 110, at f_1, arrives at the receiver. The sampling period of 128 msec. is initiated at the time $T_0 + T_{PH}$. Thus, the entire symbol on f_2, $X_0 - X_{1023}$, is sampled. The entire symbol at f_1 is also sampled because the initial 8 msec. of that symbol has been retransmitted.

Also, intersymbol interference has been eliminated. The arrival of the second symbol, (y_i), at f_1 has been delayed 8 msec. by the retransmission of the first 8 msec. of (x_i). Thus, the leading edge of the second symbol at f_1, does not overlap the trailing edge of the first symbol at f_2.

The 8 msec. guardtime reduces the usable time-bandwidth product of the system by only about 6%. This

small decrease is due to the very long duration of each symbol relative to the necessary guardtime.

Tracking

In practice, for a given carrier, the magnitudes of the (x,y) vectors extracted during the demodulation process do not fall exactly at the constellation points but are distributed over a range about each point due to noise and other factors. Accordingly, the signal is decoded utilizing a modulation template as depicted in Fig. 11.

Referring now to Fig. 11, the template is formed by a grid of squares 113 with the constellation points 114 at the centers of the squares 113.

In Fig. 11, the vector $W = (x_n, y_n)$ represents the demodulated amplitudes of the sine and cosine signals at f_n. W is in the square 113 having the constellation point (3,3) centered therein. Accordingly, W is decoded as (3,3).

The present invention includes a system for tracking to determine changes in transmission loss, frequency offset, and timing from the values determined during synchronization.

This tracking system utilizes the position of the received vectors in the squares of the demodulation template of Fig. 11. In Fig. 12, a single square is divided into four quadrants upper left, lower right, upper right, lower right, 115, 116, 117, and 118 characterized as too fast, too slow, too big, and too little, respectively. If counts in all four quadrants over time by frequency or over frequency at one time are equal or nearly equal then the system is in alignment. That is, if noise is the only impairment, then the direction of error for the decoded vector, W, should be random.

However, if transmission loss changes by even 0.1dB the number of too small counts will vary significantly from the number of too large counts. Similarly, a large difference between the number of too fast and

too slow counts indicates a phase rotation caused by a change in the offset frequency. Thus, the differences between the too fast, too slow, and too big, too small counts is an error characteristic that tracks variations in signal loss and offset frequency.

The present invention utilizes this error characteristic to adjust the signal loss and frequency offset determined during synchronization. For each frequency an adjustment of ± .1dB or ± 1.0° is made depending on the error characteristic. Other divisions of the decoding region into distinct or overlapping subregions characterized as too fast, too slow, too big, and too little are preferred in some embodiments.

Additionally, the phase of the timing signals is tracked to allow corrections of T_0.

Allocation of Channel Control

The present invention further includes a unique system for allocating control of an established communication link between the originate and answer modems (hereinafter designated A and B, respectively). Each waveform comprising the encoded ensemble of frequencies forms a packet of information.

Control of the transmission link is first allocated to modem A. Modem A then determines the volume of data in its input buffer and transmits between I (a minimum) and N (a previously determined maximum) packets of data as appropriate. The predetermined number N serves as a limit and the end number of transmitted packets may be significantly less than required to empty the input buffer. On the other hand, if modem A has little or no data in its input buffer it will still transmit I packets of information to maintain communication with modem B. For example, the I packets may comprise the originate or answer comb of frequencies defined above with respect to Fig. 4 and the synchronization process.

Control of the communication link is then allocated to modem B which repeats the actions of modem A. Of course, if modem B transmits the minimum number,I, of packets it is confirming to modem A the vitality of modem B.

There is no need for the limits N on the two modems to be the same, or to restrict them from being adaptable under modem control to obtain rapid character echo or other user oriented goals.

Hardware Implementation

Fig. 13 is a block diagram of a hardware embodiment of the invention. Referring now to Fig. 13, an electronic digital processor 120, an analog I/O interface 44, and a digital I/O interface 122 are coupled to a common data bus 124. The analog I/O interface 44 interfaces the public switched telephone line 48 with the common data bus 124 and the digital interface 122 interfaces digital terminal equipment 126 with the common data bus 124.

The following components are utilized in a preferred embodiment of the invention. The analog I/O interface 44 is a high performance 12 bit coder-decoder (codec) and telephone line interface. The interface has access to RAM 132 and is controlled by supervisory microprocessor 128. The codec is a single chip combination of an analog to digital converter, a digital to analog converter, and several band pass filters.

The digital I/O interface 122 is a standard RS-232 serial interface to a standard twenty-five pin RS-232 type connector or a parallel interface to a personal computer bus.

The electronic digital processor 120, includes a supervisory processor 128, a general purpose mathematical processor 130, a 32K by 16 bit shared RAM subsystem 132, and a read only memory (ROM) unit 133, coupled to an address bus 135.

The supervisory microprocessor 128 is a 68000 data processor subsystem including a 10MHz 68000 processor and the 68000 program memory. The 32K by 16 bit program memory consists of several low power, high density, ROM chips included in the ROM unit 133.

The mathematical processor 130 is a 320 digital signal microprocessor system (DSP) including a 20MHz 320 processor, the 320 program memory, and an interface to the shared RAM system. Two high speed ROM chips, included in ROM unit 133, comprise the 8192 x 16 bit program memory.

The 320 system program memory includes programs for performing the modulation table look-up, FFT, demodulation, and other operations described above. The 68000 processor handles digital data streams at the input and output, performs tasking to and supervision of the 320 signal processor and associated analog I/O, and performs self and system test as appropriate.

The invention has been explained with respect to specific embodiments. Other embodiments will now be apparent to those of ordinary skill in the art.

In particular, the ensemble of carrier frequencies need not be limited as above-described. The number of carriers may be any power of 2, e.g. 1024, or some arbitrary number. Additionally, the frequencies need not be evenly spaced over the entire VF band. Further, the QAM scheme is not critical to practicing the invention. For example, AM could be utilized although the data rate, R_B, would be reduced.

Still further, the modulation template need not be comprised of squares. Arbitrarily shaped regions surrounding the constellation points may be defined. The tracking system was described where the squares in the modulation template were divided into four quadrants. However, a given parameter may be tracked by tracking the difference in the number of

counts in arbitrary regions defined about a constellation point.

Still further, a hardware embodiment including a supervisory microprocessor and a general purpose mathematical processor has been described. However, different combinations of IC chips may be utilized. For example, a dedicated FFT chip could be utilized to perform modulation and demodulation operations.

Still further, the information units utilized in the above description were bits. However, the invention is not limited to binary system.

Accordingly, it is therefore intended that the invention can be limited except as indicated by the appended claims.

WHAT IS CLAIMED IS:

1. In a high speed modem, for transmitting data over a telephone line, of the type that encodes data elements on an ensemble of carrier frequencies, a method for allocating data and power to the carrier frequencies, said method comprising the steps of:

determining the equivalent noise component for every carrier frequency in the ensemble;

determining the marginal power requirement to increase the complexity of the data element on each carrier from n information units to n + 1 information units, n being an integer between 0 and N;

ordering the marginal powers of all the carriers in the ensemble in order of increasing power;

assigning available power to the ordered marginal powers in order of increasing power;

determining the value, MP(max) at which point the available power is exhausted; and

allocating power and data to each carrier frequency where the power allocated is equal to the sum of all the marginal powers less than or equal to MP(max) for that carrier and the number of data units allocated is equal to the number of marginal powers for that carrier less than or equal to MP(max).

2. The invention of claim 1 where said step of ordering comprises the steps of:

providing a table of arbitrary marginal power levels; and

rounding the value of each determined marginal power level to one of the values of the table of arbitrary marginal power levels to decrease computational complexity.

3. The invention of claim 2 wherein the step of determining equivalent noise comprises the steps of:

providing an A and a B modem interconnected by a telephone line;

establishing a communication link between said A and B modems;

accumulating line noise data during a no transmission time interval at said A and B modems;

transmitting at least a first ensemble of frequency carriers from said A modem to said B modem, where the amplitude of each carrier has a predetermined value;

receiving said first ensemble at said B modem;

measuring the amplitude of each carrier received at said B modem;

comparing the measured amplitudes at said B modem with said predetermined amplitudes to determine signal loss, in dB, at each carrier frequency;

determining the value of the component, in dB, at each carrier frequency of the accumulated noise; and

adding the signal loss at each carrier frequency to the noise component at each carrier frequency to determine equivalent noise.

4. A high speed modem of the type for transmitting a signal on a VF telephone line, comprising:

means for receiving an input digital data stream and for storing said input digital data;

means for generating a modulated ensemble of carriers to encode said input digital data, where each carrier has data elements of variable complexity encoded thereon;

means for measuring the signal loss and noise loss of the VF telephone line for each carrier; and

means for varying the complexity of the data element encoded on each carrier and the amount of power allocated to each carrier to compensate for the measured signal loss and noise level.

5. A high speed modem of the type that encodes data elements on an ensemble of carriers of different frequency, said modem comprising:

a digital electronic processor;

a digital electronic memory;

bus means for coupling said processor and said memory;

means, associated with said digital electronic processor, for

determining the equivalent noise component for every carrier frequency in the ensemble;

determining the marginal power requirements to increase the complexity of the data element on each carrier from n information units to n + 1 information units, n being an integer between 0 and N;

ordering the marginal powers of all the carriers in the ensemble in order of increasing power;

assigning available power to the ordered marginal powers in order of increasing power;

determining the value, MP(max) at which point the available power is exhausted; and

assigning power and data to each carrier frequency where the power assigned is equal to the sum of all the marginal powers less than or equal to MP(max) for that carrier and the number of data units is equal to the number of marginal powers for that carrier less than or equal to MP(max).

6. In a high speed modem, for transmitting data in the form of a QAM ensemble of carrier frequencies on a VF telephone line, of the type that measures the magnitude of a system parameter prior to

transmission, a method for tracking deviations in the magnitude of the system parameter during the receipt of data, said method comprising the steps of:

generating QAM constellations for a plurality of carrier frequencies;

constructing a demodulation template for one of said plurality of carrier frequencies comprising a plurality of first regions with one of the points of said constellation positioned within each of said first regions;

forming a set of tracking regions where each first region has a first and second tracking region disposed therein;

demodulating said ensemble of carriers to obtain the demodulation points positioned in said set of first and second tracking regions;

counting the number of points disposed in said set of first tracking regions and the number of points disposed in said set of second tracking regions;

determining the difference in the number of counts disposed in said set of first tracking regions and disposed in said tracking regions to construct an error characteristic; and

utilizing said error characteristic to adjust the magnitude of said signal parameter during the receipt of data.

7. The invention of claim 6 wherein said step of constructing a demodulation template comprises the step of:

constraining said first regions to be in the shape of squares having said constellation points centered therein.

8. The invention of claim 7 wherein said step of forming said tracking regions comprises the step of:

dividing said squares into quadrants; and

selecting said tracking regions to be symmetrically disposed quadrants.

9. In a communication system of the type including two modems (A and B) coupled by a transmission link, each modem having an input buffer for storing data to be transmitted, a method for allocating control of the transmission link between modem A and B comprising the steps of:

allocating control of the transmission link to modem A;

determining the volume of data stored in the input buffer of modem A;

determining the number,K, of packets of data required to transmit the volume of data stored in the input buffer of modem A;

transmitting L packets of data from modem A to modem B where L is equal to I_A if K is less than I_A, where L is equal to K if K is greater than or equal to I_A, and where L is equal to N_A if K is greater than N_A so that the minimum number of packets transmitted is I_A and the maximum is N_A;

allocating control of the transmission link to modem B;

determining the volume of data in the input buffer of modem B;

determining the number,J, of packets of data required to transmit the volume of data stored in the input buffer of modem B;

transmitting M packets of data from modem B to modem A where M is equal to I_B if J is less than I_B, where M is equal to J if J is greater than or equal to I_B, and where L is equal to N_B if J is greater than N_B so that the minimum number of packets transmitted is I_B and the maximum is N_B;

where allocation of control between modem A and B is dependent on the volume of data stored in the input buffers of modems A and B.

10. In a high speed modem, for transmitting data over a telephone line, of the type that encodes data elements on an ensemble of carrier frequencies, a system for allocating data and power to the carrier frequencies, said system comprising:

means for determining the equivalent noise component for every carrier frequency in the ensemble;

means for determining the marginal power requirement to increase the complexity of the data element on each carrier from n information units to n + 1 information units, n being an integer between 0 and N;

means for ordering the marginal powers of all the carriers in the ensemble in order of increasing power;

means for assigning available power to the ordered marginal powers in order of increasing power;

means for determining the value, MP(max) at which point the available power is exhausted; and

means allocating power and data to each carrier frequency where the power allocated is equal to the sum of all the marginal powers less than or equal to MP(max) for that carrier and the number of data units allocated is equal to the number of marginal powers for that carrier less than or equal to MP(max).

11. The invention of claim 10 where said means for ordering comprises:

means for providing a table of arbitrary marginal power levels; and

means for rounding the value of each determined marginal power level to one of the values of the table of arbitrary marginal power levels to decrease computational complexity.

12. The invention of claim 11 wherein an A and B modem are connected by a telephone line and the means for determining equivalent noise comprises:

means for establishing a communication link between said A and B modems;

means for accumulating line noise data during a no transmission time interval at said A and B modems;

means for transmitting a first ensemble of frequency carriers from said A modem to said B modem, where the amplitude of each carrier has a predetermined value;

means for receiving said first ensemble at said B modem;

means for measuring the amplitude of each carrier received at said B modem;

means for comparing the measured amplitudes at said B modem with said predetermined amplitudes to determine signal loss at each carrier frequency;

means for determining the value of the component, in dB, at each carrier frequency of the accumulated noise; and

means for adding the signal loss at each carrier frequency to the noise component at each carrier frequency to determine equivalent noise.

13. In a high speed modem, for transmitting data in the form of a QAM ensemble of carrier frequencies on a VF telephone line, of the type that measures the magnitude of a system parameter prior to transmission, a system for tracking deviations in the magnitude of the system parameter during the receipt of data, said system comprising:

means for generating QAM constellations for a plurality of carrier frequencies;

means for constructing a demodulation template for one of said plurality of carrier frequencies comprising a plurality of first regions with one of the

points of said constellation positioned within each of said first regions;

means for forming a set of tracking regions where each first region has a first and second tracking region disposed therein;

means for demodulating said ensemble of carriers to obtain the modulation points positioned in said set of first and second tracking regions;

means for counting the number of points disposed in said set of first tracking regions and the number of points disposed in said set of second tracking regions;

means for determining the difference in the number of counts disposed in said set of first tracking regions and disposed in said tracking regions to construct an error characteristic; and

means for utilizing said error characteristic to adjust the magnitude of said signal parameter during the receipt of data.

14. The invention of claim 13 wherein said means for constructing a demodulation template comprises:

means for constraining said first regions to be in the shape of squares having said constellation points centered therein.

15. The invention of claim 14 wherein said means for forming said tracking regions comprises:

means for dividing said squares into quadrants; and

means for selecting said tracking regions to be symmetrically disposed quadrants.

16. In a communication system of the type including two modems (A and B) coupled by a transmission link, each modem having an input buffer for storing data to be transmitted, a system for allocating control

of the transmission link between modem A and B comprising:

means for allocating control of the transmission link to modem A;

means for determining the number,K, of packets of data required to transmit the volume of data stored in the input buffer of modem A;

means for transmitting L packets of data from modem A to modem B where L is equal to I_A if K is less than I_A but less than N_A, where L is equal to K if K is greater than or equal to I_A, and where L is equal to N_A if K is greater than N_A so that the minimum number of packets transmitted is I_A and the maximum is N_A;

means for allocating control of the transmission link to modem B;

means for determining the volume of data in the input buffer of modem B;

means for determining the number,J, of packets of data required to transmit the volume of data stored in the input buffer of modem B;

means for transmitting M packets of data from modem B to modem A where M is equal to I_B if J is less than I_B, where M is equal to J if J is greater than or equal to I_B but less than N_B, and where L is equal to N_B if J is greater than N_B so that the minimum number of packets transmitted is I_B and the maximum is N_B;

where allocation of control between modem A and B is dependent on the volume of data stored in the input buffers of modems A and B.

17. In a high speed modem communication system including two modems (A and B) coupled by a transmission link, each modem having an input buffer for storing data to be transmitted, each modem for transmitting data over a telephone line and each modem of the type that encodes data elements on an ensemble of carrier frequencies, a method of operating said modems to effi-

ciently allocate power and data to the carrier frequencies, to compensate for frequency dependent phase delay, where the maximum estimated magnitude of the phase delay is T_{PH}, to prevent intersymbol interference, to allocate control of the transmission link between modem A and modem B and for initiating a sampling interval having a given time sample offset equal to the reciprocal of the sampling frequency, said method comprising:

determining the equivalent noise component for every carrier frequency in the ensemble;

determining the marginal power requirement to increase the complexity of the data element on each carrier from n information units to n + 1 information units, n being an integer between 0 and N;

ordering the marginal powers of all the carriers in the ensemble in order of increasing power;

assigning available power to the ordered marginal powers in order of increasing power;

determining the value, MP(max) at which point the available power is exhausted;

allocating power and data to each carrier frequency where the power allocated is equal to the sum of all the marginal powers less than or equal to MP(max) for that carrier and the number of data units allocated is equal to the number of marginal powers for that carrier less than or equal to MP(max);

transmitting a symbol encoded on one of said carrier frequencies where said symbol is a predetermined time duration, T_S;

retransmitting the first T_{PH} seconds of said symbol to form a transmitted waveform of duration $T_E + T_{PH}$;

allocating control of the transmission link to modem A;

determining the volume of data stored in the input buffer of modem A;

determining the number, K, of packets of data required to transmit the volume of data stored in the input buffer of modem A;

transmitting L packets of data from modem A to modem B where L is equal to I_A if K is less than I_A, where L is equal to K if K is greater than or equal to I_A, and where L is equal to N_A if K is greater than N_A so that the minimum number of packets transmitted is I_A and the maximum is N_A;

allocating control of the transmission link to modem B;

determining the volume of data in the input buffer of modem B;

determining the number,J, of packets of data required to transmit the volume of data stored in the input buffer of modem B;

transmitting M packets of data from modem B to modem A where M is equal to I_B if J is less than I_B, where M is equal to J if J is greater than or equal to I_B, and where L is equal to N_B if J is greater than N_B so that the minimum number of packets transmitted is I_B and the maximum is N_B;

where allocation of control between modem A and B is dependent on the volume of data stored in the input buffers of modems A and B;

generating an analog waveform at modem A including first and second frequency components at f_1 and f_2;

transmitting said waveform from modem A to modem B at time T_A;

adjusting the phases of said first and and second frequency components so that their relative phase difference at time T_A is equal to about 0°;

detecting energy at frequency f_1 at modem B to determine the estimated time, T_{EST}, that said waveform arrives at modem B;

determining the relative phase difference at modem B between said first and second frequency components at time T_{EST};

calculating the number of sampling time offsets, N_I, required for the relative phase of said first and second carriers to change from 0 to said relative phase difference; and

changing the magnitude of T_{EST} by N_I sampling intervals to obtain a precise timing reference, T_0.

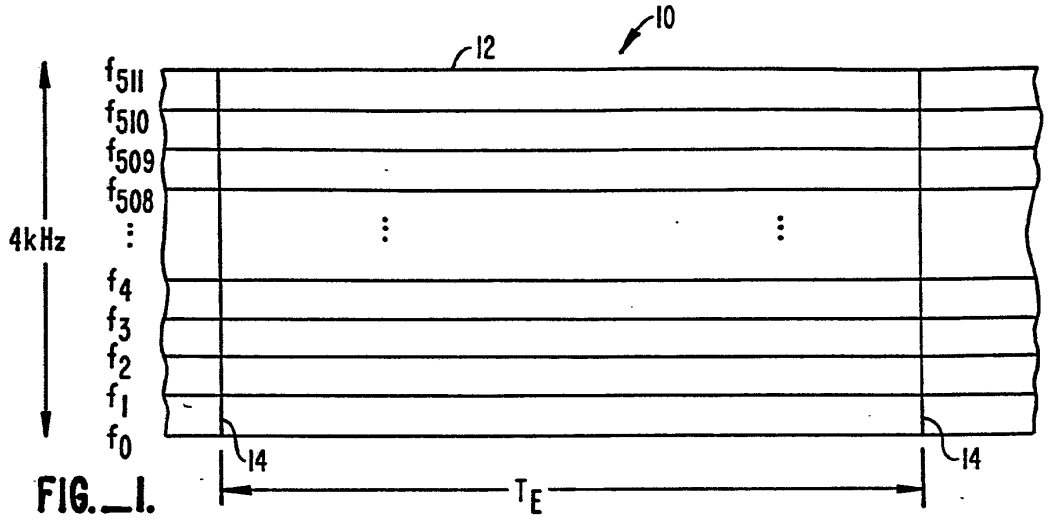

FIG._1.

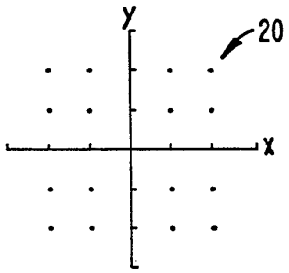

FIG._2.

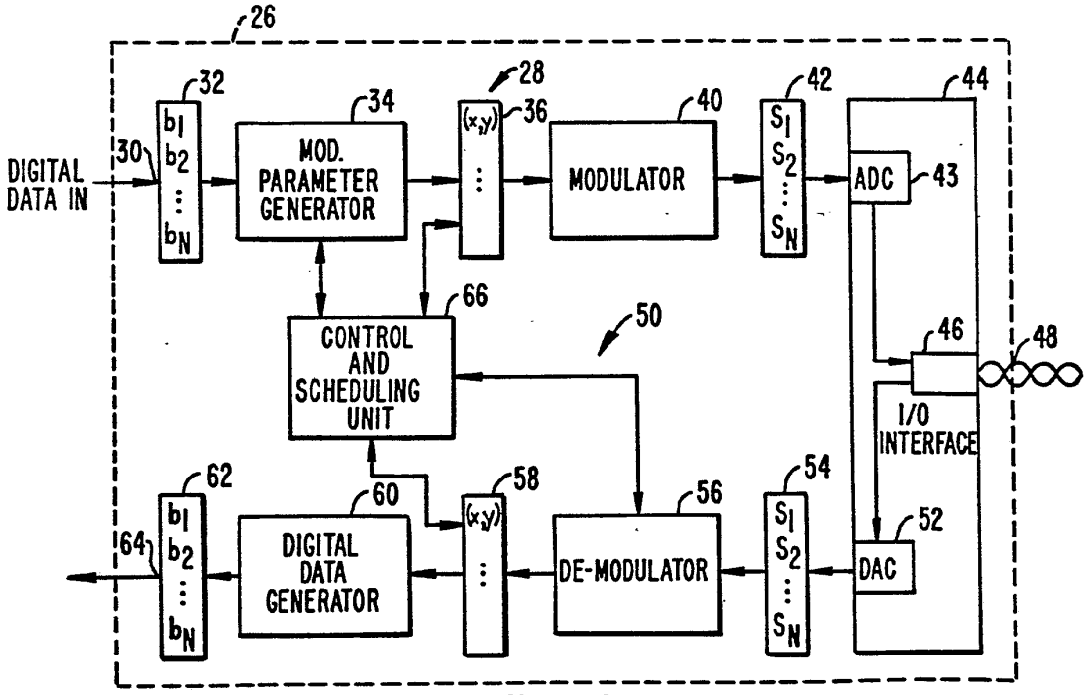

FIG._3.

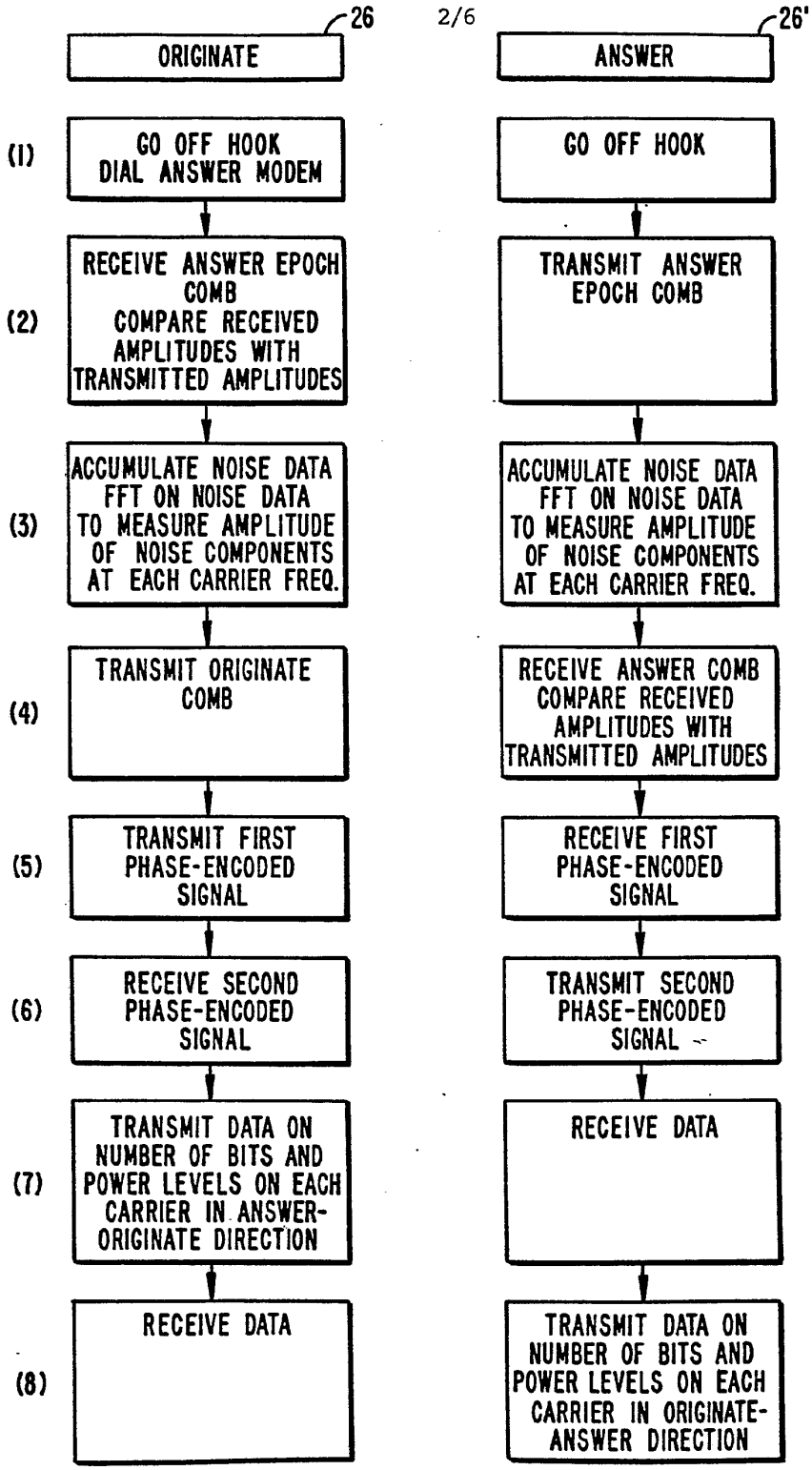
26
ORIGINATE
(1)
GO OFF HOOK
DIAL ANSWER MODEM
(2)
RECEIVE ANSWER EPOCH COMB
COMPARE RECEIVED AMPLITUDES WITH TRANSMITTED AMPLITUDES
(3)
ACCUMULATE NOISE DATA
FFT ON NOISE DATA
TO MEASURE AMPLITUDE OF NOISE COMPONENTS AT EACH CARRIER FREQ.
(4)
TRANSMIT ORIGINATE COMB
(5)
TRANSMIT FIRST PHASE-ENCODED SIGNAL
(6)
RECEIVE SECOND PHASE-ENCODED SIGNAL
(7)
TRANSMIT DATA ON NUMBER OF BITS AND POWER LEVELS ON EACH CARRIER IN ANSWER-ORIGINATE DIRECTION
(8)
RECEIVE DATA
26'
ANSWER
GO OFF HOOK
TRANSMIT ANSWER EPOCH COMB
ACCUMULATE NOISE DATA
FFT ON NOISE DATA
TO MEASURE AMPLITUDE OF NOISE COMPONENTS AT EACH CARRIER FREQ.
RECEIVE ANSWER COMB
COMPARE RECEIVED AMPLITUDES WITH TRANSMITTED AMPLITUDES
RECEIVE FIRST PHASE-ENCODED SIGNAL
TRANSMIT SECOND PHASE-ENCODED SIGNAL
RECEIVE DATA
TRANSMIT DATA ON NUMBER OF BITS AND POWER LEVELS ON EACH CARRIER IN ORIGINATE-ANSWER DIRECTION

FIG. 4.

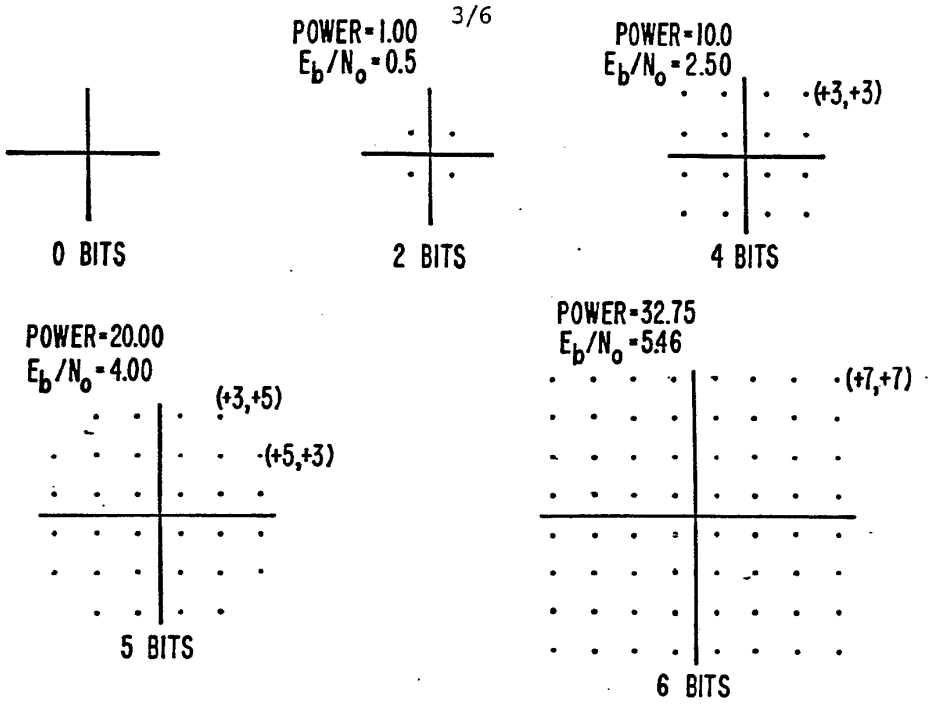
POWER=1.00
E_b/N_o=0.5
POWER=10.0
E_b/N_o=2.50
(+3,+3)
0 BITS
2 BITS
4 BITS
POWER=20.00
E_b/N_o=4.00
(+3,+5)
(+5,+3)
POWER=32.75
E_b/N_o=5.46
(+7,+7)
5 BITS
6 BITS

FIG.__5.

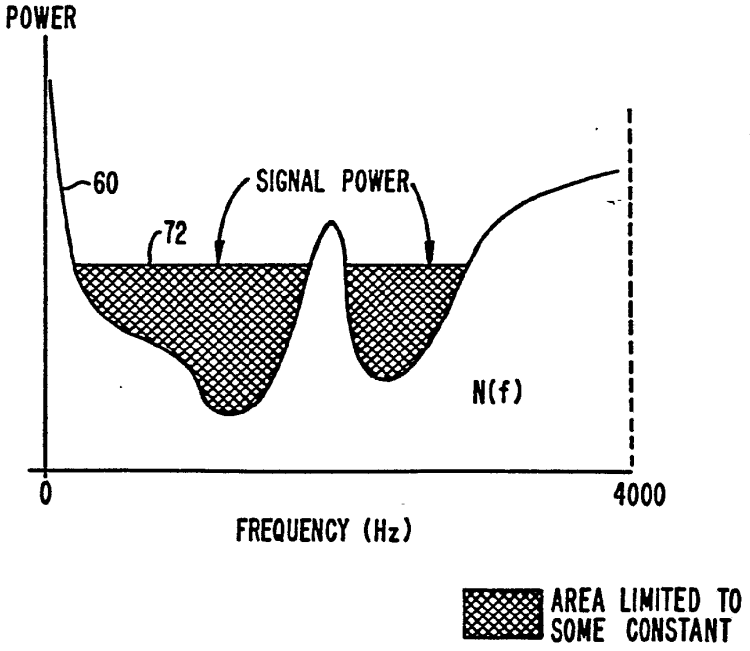
POWER
60
72
SIGNAL POWER
N(f)
0
4000
FREQUENCY (Hz)
AREA LIMITED TO SOME CONSTANT

FIG.__6.

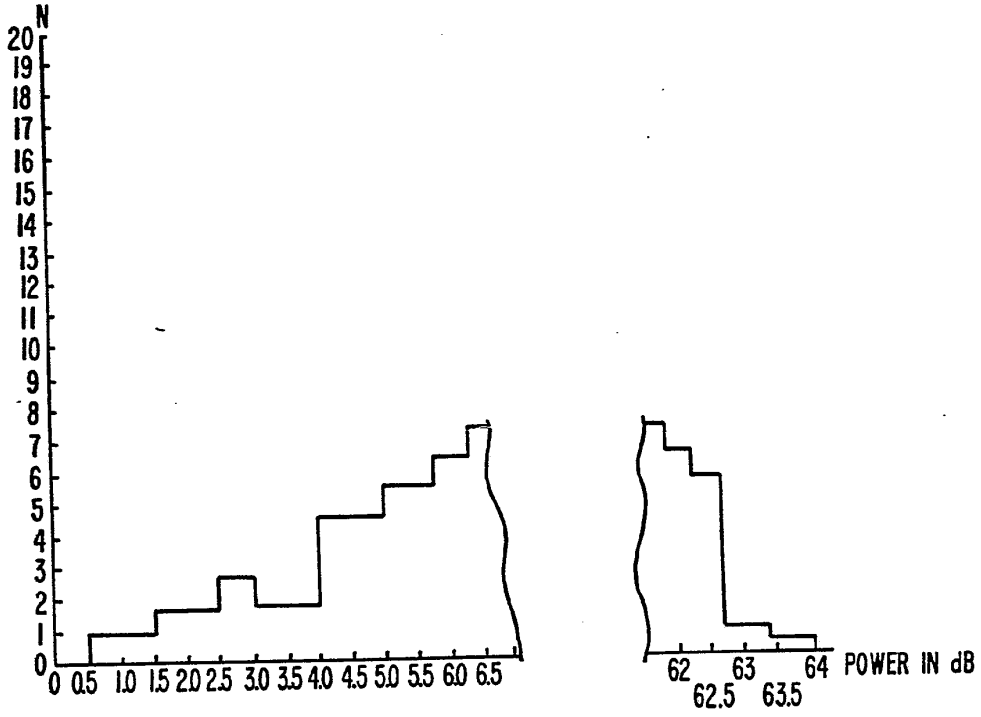
N
20
19
18
17
16
15
14
13
12
11
10
9
8
7
6
5
4
3
2
1
0
0 0.5 1.0 1.5 2.0 2.5 3.0 3.5 4.0 4.5 5.0 5.5 6.0 6.5
62 63 64 POWER IN dB
62.5 63.5

FIG._7.

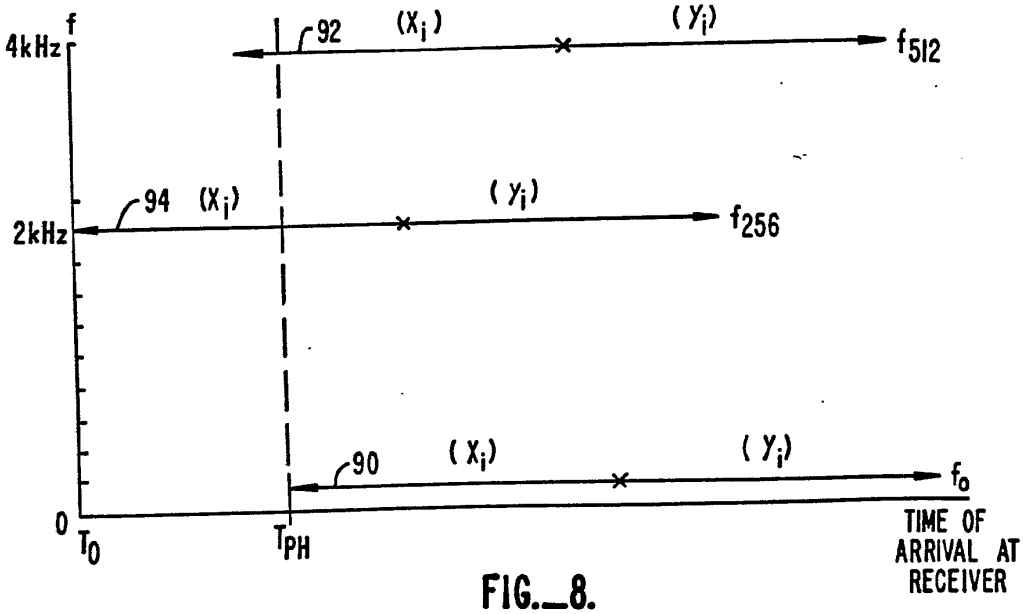
f
4kHz
2kHz
0
92
(Xi)
(Yi)
f512
94
(Xi)
(Yi)
f256
90
(Xi)
(Yi)
fo
T0
TPH
TIME OF ARRIVAL AT RECEIVER

FIG._8.

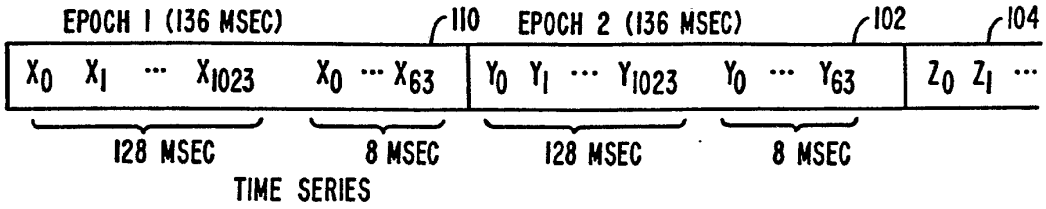

FIG. 9.

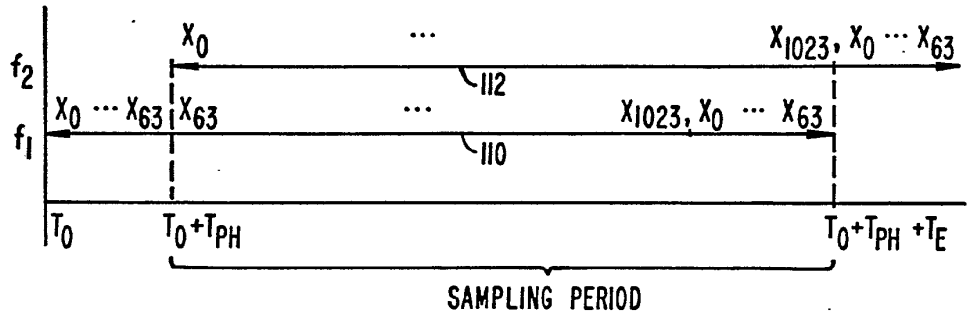

FIG. 10.

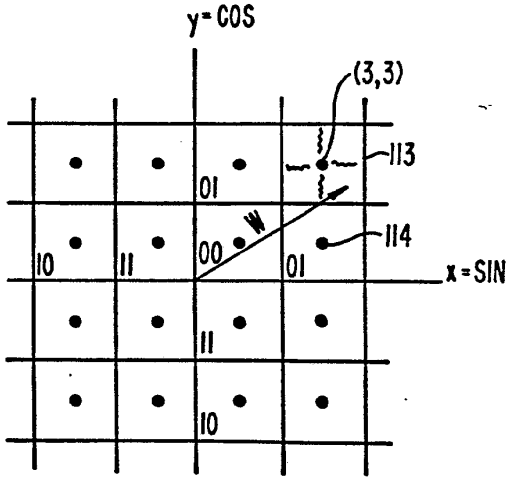

FIG. 11.

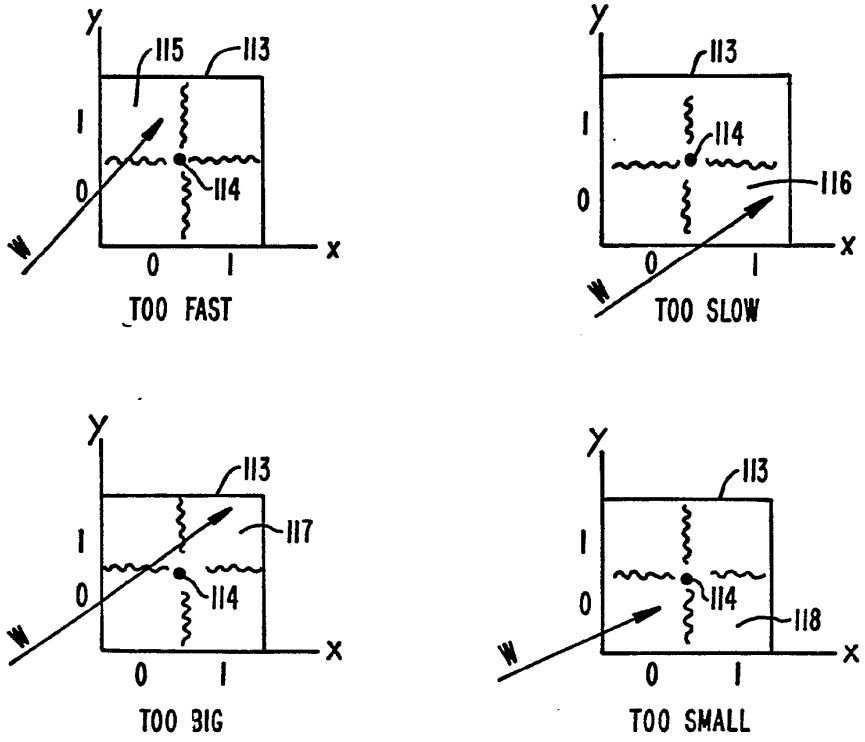
Y
115
113
1
0
114
W
X
0
1
TOO FAST
Y
113
1
114
116
0
X
0
1
W
TOO SLOW
Y
113
1
117
0
114
W
X
0
1
TOO BIG
Y
113
1
0
114
118
W
X
0
1
TOO SMALL

FIG._12.

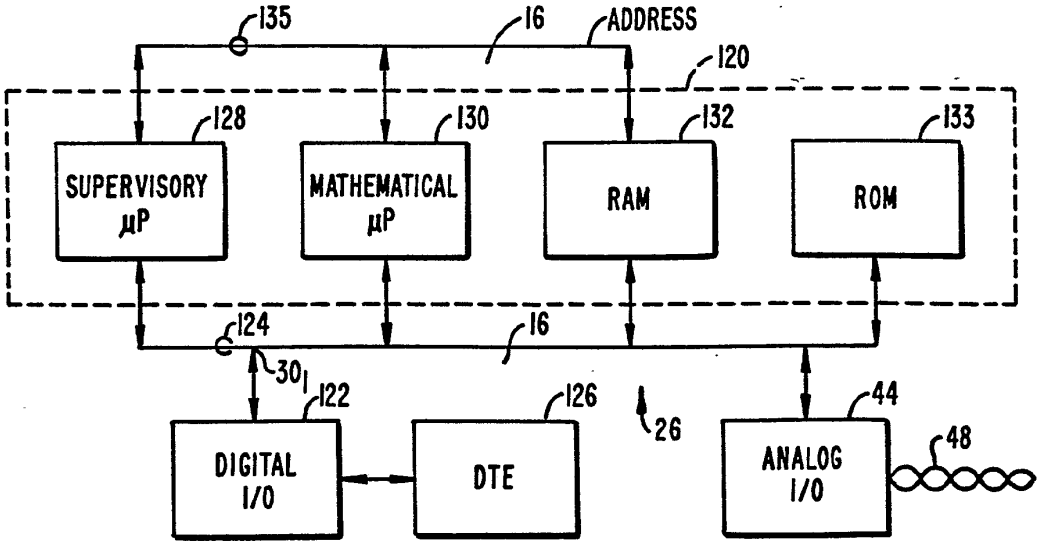
135
16
ADDRESS
120
128
130
132
133
SUPERVISORY μP
MATHEMATICAL μP
RAM
ROM
124
16
30
122
126
26
44
48
DIGITAL I/O
DTE
ANALOG I/O

FIG._13.

INTERNATIONAL SEARCH REPORT

International Application No PCT/US86/00983

I. CLASSIFICATION OF SUBJECT MATTER (if several classification symbols apply, indicate all) [3]

According to International Patent Classification (IPC) or to both National Classification and IPC

IPC (4): H04M 11/00;H04B 15/00,1/10;H04L 5/00,25/08;H04B 1/10
U.S. Cl.: 179/2DP; 375/39,58,99; 455/63

II. FIELDS SEARCHED

Minimum Documentation Searched [4]

Classification System	Classification Symbols
U.S.	179/2DP; 375/38,39,40,58,118; 370/16,108; 455/63,68+; 340/825.15

Documentation Searched other than Minimum Documentation to the Extent that such Documents are Included in the Fields Searched [5]

III. DOCUMENTS CONSIDERED TO BE RELEVANT [14]

Category *	Citation of Document, [16] with indication, where appropriate, of the relevant passages [17]	Relevant to Claim No. [18]
X,P	Telecommincations, Volume 19, No. 10, issued October 1985 (Dedham, Massachusetts), H.R. Johnson, "PC Communications: The Revolution Is Coming", see pages 58j to 58r.	1-17
A	US, A, 4,438,511 (Baran) 20 March 1984	1-17
A,P	US, A, 4,559,520 (Johnston) 17 December 1985	1-17
A	US, A, 4,206,320 (Keasler et al.) 03 June 1980	1-17
A	US, A, 3,810,019 (Miller) 07 May 1974	1-5,10-12,17
A	US, A, 4,328,581 (Harmon et al.) 04 May 1982	1-5,10-12,17
A	US, A, 3,971,996 (Motley et al.) 27 July 1976	6-8,13-15
A,P	US, A, 4,555,790 (Betts et al.) 26 November 1985	6-8,13-15

(cont'd)

* Special categories of cited documents: [15]

"A" document defining the general state of the art which is not considered to be of particular relevance

"E" earlier document but published on or after the international filing date

"L" document which may throw doubts on priority claim(s) or which is cited to establish the publication date of another citation or other special reason (as specified)

"O" document referring to an oral disclosure, use, exhibition or other means

"P" document published prior to the international filing date but later than the priority date claimed

"T" later document published after the international filing date or priority date and not in conflict with the application but cited to understand the principle or theory underlying the invention

"X" document of particular relevance; the claimed invention cannot be considered novel or cannot be considered to involve an inventive step

"Y" document of particular relevance; the claimed invention cannot be considered to involve an inventive step when the document is combined with one or more other such documents, such combination being obvious to a person skilled in the art.

"&" document member of the same patent family

IV. CERTIFICATION

Date of the Actual Completion of the International Search [2]	Date of Mailing of this International Search Report [2]
17 June 1986	10 JUL 1986
International Searching Authority [1]	**Signature of Authorized Officer** [20]
ISA/US	Matthew E. Connors Matthew E. Connors

Form PCT/ISA/210 (second sheet) (October 1981)

III. DOCUMENTS CONSIDERED TO BE RELEVANT (CONTINUED FROM THE SECOND SHEET)

Category *	Citation of Document, 16 with indication, where appropriate, of the relevant passages 17	Relevant to Claim No 18
A	US, A, 3,783,385 (Dunn et al.) 01 January 1974	1-5
A	US, A, 4,047,153 (Thirion) 06 September 1977	1-5
A	US, A, 4,494,238 (Groth, Jr.) 15 January 1985	1-5
A	US, A, 4,495,619 (Acampora) 22 January 1985	1-5,10-12,17
A	US, A, 4,484,336 (Catchpole et al.) 20 November 1984	1-5,10-12,17
A	US, A, 4,459,701 (Lamiral et al.) 10 July 1984	9,16,17
A	US, A, 3,755,736 (Kaneko et al.) 28 August 1973	9,16,17
A	US, A, 4,315,319 (White) 09 February 1982	1-5,10-12,17
A,P	US, A, 4,573,133 (White) 25 February 1986	1-5,10-12,17
A	US, A, 4,392,225 (Wortman) 05 July 1983	1-5,10-12,17

PCT WELTORGANISATION FÜR GEISTIGES EIGENTUM
Internationales Büro

INTERNATIONALE ANMELDUNG VERÖFFENTLICHT NACH DEM VERTRAG ÜBER DIE INTERNATIONALE ZUSAMMENARBEIT AUF DEM GEBIET DES PATENTWESENS (PCT)

(51) Internationale Patentklassifikation 6 :		(11) Internationale Veröffentlichungsnummer: **WO 97/01900**
H04L 5/14	**A1**	(43) Internationales Veröffentlichungsdatum: 16. Januar 1997 (16.01.97)

(21) **Internationales Aktenzeichen:** PCT/AT96/00112

(22) **Internationales Anmeldedatum:** 21. Juni 1996 (21.06.96)

(30) **Prioritätsdaten:**
A 1087/95 26. Juni 1995 (26.06.95) AT

(71) **Anmelder** *(für alle Bestimmungsstaaten ausser US)*: ERICSSON AUSTRIA AG [AT/AT]; Pottendorfer Strasse 25-27, A-1121 Wien (AT).

(72) **Erfinder; und**
(75) **Erfinder/Anmelder** *(nur für US)*: PFIEFFER, Johann [AT/AT]; Siedlungsstrasse 19, A-3804 Allentsteig (AT).

(74) **Anwalt:** GIBLER, Ferdinand; Dorotheergasse 7, A-1010 Wien (AT).

(81) **Bestimmungsstaaten:** AL, AM, AT, AU, AZ, BB, BG, BR, BY, CA, CH, CN, CZ, DE, DK, EE, ES, FI, GB, GE, HU, IL, IS, JP, KE, KG, KP, KR, KZ, LK, LR, LS, LT, LU, LV, MD, MG, MK, MN, MW, MX, NO, NZ, PL, PT, RO, RU, SD, SE, SG, SI, SK, TJ, TM, TR, TT, UA, UG, US, UZ, VN, ARIPO Patent (KE, LS, MW, SD, SZ, UG), eurasisches Patent (AM, AZ, BY, KG, KZ, MD, RU, TJ, TM), europäisches Patent (AT, BE, CH, DE, DK, ES, FI, FR, GB, GR, IE, IT, LU, MC, NL, PT, SE), OAPI Patent (BF, BJ, CF, CG, CI, CM, GA, GN, ML, MR, NE, SN, TD, TG).

Veröffentlicht
Mit internationalem Recherchenbericht.
Vor Ablauf der für Änderungen der Ansprüche zugelassenen Frist. Veröffentlichung wird wiederholt falls Änderungen eintreffen.

(54) **Title:** METHOD OF BI-DIRECTIONAL DATA TRANSMISSION OVER A TWO-WIRE LINE

(54) **Bezeichnung:** VERFAHREN ZUR BIDIREKTIONALEN DATENÜBERTRAGUNG ÜBER EINE ZWEIDRAHTLEITUNG

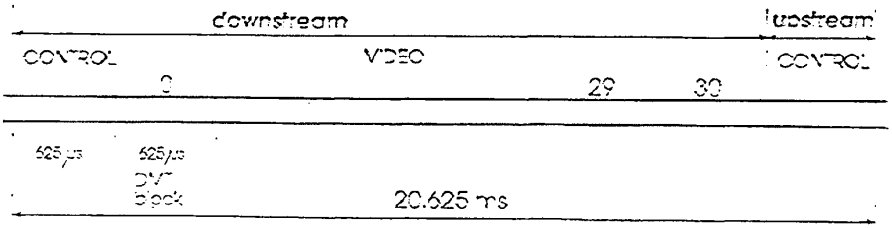

(57) **Abstract**

Proposed is a method of bi-directional data transmission over a two-wire line. Digital data destined for transmission or reception, e.g. using discrete multitone modulation (DMT), are modulated or demodulated as appropriate and separated by time-division multiplexing. The appropriate multiplex time frame is subdivided into a predetermined number N of time slots and a number K of those time slots is assigned exclusively to one direction, e.g. transmission, the remaining time slots (= N-K in number) being assigned exclusively to the other direction (e.g. reception).

(57) **Zusammenfassung**

Verfahren zur bidirektionalen Datenübertragung über eine Zweidrahtleitung, wobei digitale Daten zum Senden oder Empfangen, z.B. mittels diskreter Mehrtonmodulation (DMT), moduliert bzw. demoduliert und die zu sendenden und zu empfangenden Daten durch Zeitmultiplexbetrieb getrennt werden, wobei der zugehörige Multiplex-Zeitrahmen in eine vorbestimmbare Anzahl N von Zeitschlitzen unterteilt wird, und davon eine Anzahl K von Zeitschlitzen ausschließlich einer Übertragungsrichtung, z.B. Senden, und die restliche Anzahl (N-K) von Zeitschlitzen ausschließlich der anderen Übertragungsrichtung, z.B. Empfangen, zugeordnet wird.

LEDIGLICH ZUR INFORMATION

Codes zur Identifizierung von PCT-Vertragsstaaten auf den Kopfbögen der Schriften, die internationale Anmeldungen gemäss dem PCT veröffentlichen.

AM	Armenien	**GB**	Vereinigtes Königreich	**MX**	Mexiko
AT	Österreich	**GE**	Georgien	**NE**	Niger
AU	Australien	**GN**	Guinea	**NL**	Niederlande
BB	Barbados	**GR**	Griechenland	**NO**	Norwegen
BE	Belgien	**HU**	Ungarn	**NZ**	Neuseeland
BF	Burkina Faso	**IE**	Irland	**PL**	Polen
BG	Bulgarien	**IT**	Italien	**PT**	Portugal
BJ	Benin	**JP**	Japan	**RO**	Rumänien
BR	Brasilien	**KE**	Kenya	**RU**	Russische Föderation
BY	Belarus	**KG**	Kirgisistan	**SD**	Sudan
CA	Kanada	**KP**	Demokratische Volksrepublik Korea	**SE**	Schweden
CF	Zentrale Afrikanische Republik	**KR**	Republik Korea	**SG**	Singapur
CG	Kongo	**KZ**	Kasachstan	**SI**	Slowenien
CH	Schweiz	**LI**	Liechtenstein	**SK**	Slowakei
CI	Côte d'Ivoire	**LK**	Sri Lanka	**SN**	Senegal
CM	Kamerun	**LR**	Liberia	**SZ**	Swasiland
CN	China	**LK**	Litauen	**TD**	Tschad
CS	Tschechoslowakei	**LU**	Luxemburg	**TG**	Togo
CZ	Tschechische Republik	**LV**	Lettland	**TJ**	Tadschikistan
DE	Deutschland	**MC**	Monaco	**TT**	Trinidad und Tobago
DK	Dänemark	**MD**	Republik Moldau	**UA**	Ukraine
EE	Estland	**MG**	Madagaskar	**UG**	Uganda
ES	Spanien	**ML**	Mali	**US**	Vereinigte Staaten von Amerika
FI	Finnland	**MN**	Mongolei	**UZ**	Usbekistan
FR	Frankreich	**MR**	Mauretanien	**VN**	Vietnam
GA	Gabon	**MW**	Malawi		

Verfahren zur bidirektionalen Datenübertragung über eine Zweidrahtleitung

Die Erfindung betrifft ein Verfahren zur bidirektionalen Datenübertragung über eine Zweidrahtleitung, wobei digitale Daten zum Senden oder Empfangen, z.B. mittels diskreter Mehrtonmodulation (DMT), moduliert bzw. demoduliert und die zu sendenden und zu empfangenden Daten, z.B. durch Frequenzmultiplexbetrieb (FDM) oder Echoauslöschung (EC), getrennt werden.

Um störende Beeinflussung von zu übermitteltenden Daten zu beseitigen, führen bekannte Verfahren dieser Art die Trennung der z.B. DMT-modulierten Daten im Frequenzmultiplexbetrieb (FDM) durch, wobei unterschiedliche Frequenzbereiche für die beiden Übertragungsrichtungen festgelegt sind. Eine weitere Möglichkeit zur Trennung besteht in der Anwendung des Echoauslöschungsverfahrens (EC), bei dem durch den Einsatz adaptiver Filter der Einfluß des Sendeteils auf den Empfänger durch adaptive Filter unterdrückt wird. Andere Trennverfahren wurden im Stand der Technik in diesem Zusammenhang bisher nicht verwendet.

Das FDM-Verfahren erzeugt bei der Übertragung entsprechend den beiden Übertragungsrichtungen ein unteres und ein oberes Frequenzband. Da aber die Kabeldämpfung frequenzabhängig ist, bereitet es große Schwierigkeiten für beide Übertragungskanäle die gleiche Übertragungsqualität zu erzielen, in den überwiegenden Fällen ist die Übertragungsqualität in eine besser als in die andere Richtung. Generell ist es aber erwünscht, eine möglichst gleiche Qualität für beide Kanäle anbieten zu können. Weiters ist bei FDM die Variation der Übertragungskapazität mit erheblichem Aufwand verbunden, da dafür eine Anpassung der jeweils verwendeten Bandfilter erforderlich ist, sodaß die Kanalbandbreite entsprechend erhöht oder erniedrigt werden kann.

Das weiters aus dem Stand der Technik bekannte Echoauslöschungs-Verfahren weist ebenso wenn auch anders geartete Nachteile auf. So ist bei diesem Verfahren das Nah-Nebensprechen ein großes technisches Problem, da der Signalabstand zwischen Sende- und Empfangssignal sehr groß ist. Es müssen daher sehr hohe Anforderungen an die bei den Sende- und Empfangsteilen vorgesehenen A/D-Wandler erfüllt werden, da Sende- und Empfangssignale gleichzeitig auftreten und diese entprechend gut getrennt werden müssen. Die hohen Pegelunterschiede der Sende- und Empfangssignale erfordern eine dementsprechend hohe Auflösung der A/D-Wandler, die wiederum höhere Produktkosten zur Folge hat.

Für die Durchführung dieser bekannten Trennmethoden FDM und Echoauslöschung ist auch eine relativ hohe Rechnerleistung erforderlich, die die Kosten für die Datenübertragung stark erhöhen. Besonders bei Anwendung in Fällen, in denen wie etwa bei ADSL (Asymmetric Digtal Subscriber Line) in einer Übertragungsrichtung ("downstream) große Datenraten von einer zentralen Datenanlage zu einem an der Peripherie gelegenen Teilnehmer und vergleichsweise geringe Datenraten in die andere Übertragungsrichtung ("upstream")

übermittelt werden sollen, ist der bei diesen bekannten Datenübertragungsverfahren getriebene Aufwand nur einer schlechten Nutzung unterworfen.

Ziel der Erfindung ist es, ein Verfahren anzugeben, das sich durch geringe Komplexheit hinsichtlich Hardware-Einsatz bzw. Rechnerleistung auszeichnet, sodaß die Durchführung auf einfache und kostengünstige Weise erfolgen kann.

Weiters ist es Ziel der Erfindung, ein Verfahren zu schaffen, mit dem sich bei Übertragungen, die zu einem großen Teil nur in einer der beiden Übertragungsrichtungen vor sich gehen, mit hoher Übertragungsgeschwindigkeit durchführen lassen.

Weitere Aufgabe der Erfindung ist es, eine sehr gute Übertragungsqualität mit relativ geringem technischen Aufwand zu erreichen, wobei eine Änderung der Übertragungskapazität einfach und kostengünstig möglich sein soll.

Erfindungsgemäß wird dies dadurch erreicht, daß die zu sendenden und zu empfangenden Daten durch Zeitmultiplexbetrieb (TDM) getrennt werden, wobei der zugehörige Multiplex-Zeitrahmen in eine vorbestimmbare Anzahl N von Zeitschlitzen unterteilt wird, und davon eine Anzahl K von Zeitschlitzen ausschließlich einer Übertragungsrichtung, z.B. Senden, und die restliche Anzahl (N-K) von Zeitschlitzen ausschließlich der anderen Übertragungsrichtung, z.B. Empfangen, zugeordnet wird.

Da beim erfindungsgemäßen Verfahren entweder nur Sender- oder nur Empfängerfunktionen aktiv sind, wird weniger Prozessorleistung als bei herkömmlichen Verfahren benötigt, da letztere einen sehr hohen internen Datenverkehr zu bewältigen haben. Dadurch gelingt es, eine nach dem erfindungsgemäßen Verfahren durchgeführte Übertragung sehr kostengünstig zu implementieren.

Das erfindungsgemäße Verfahren bietet weiters den Vorteil einer gleichen Übertragungsqualität in beiden Übertragungsrichtungen, da Senden und Empfangen bei TDM mit der gleichen Leitungsdämpfung erfolgt. Dadurch können beide Übertragungsrichtungen mit geringstmöglicher Qualtitätsminderung im gleichen Frequenzbereich durchgeführt werden. Ein weiterer Vorteil des erfindungsgemäßen Verfahrens ist die sehr einfache Veränderung der Übertragungskapazität, die durch die entspechende Wahl der Anzahl der Zeitschlitze für die jeweilige Übertragungsrichtung ermöglicht wird.

Als besonders vorteilhaft bei asymmetrischer Datenübertragung kann es sein, wenn in einer Übertragungsrichtung der Großteil der Daten und in der anderen nur ein kleiner Rest übertragen wird. Dies ist dann gegeben, wenn die Anzahl N der Zeitschlitze sehr viel größer als die Anzahl K gewählt wird. Vorzugsweise ist diese Bedingung erfüllt, wenn N gleich 30 und K gleich 1 ist.

Da das erfindungsgemäße Verfahren zur Datenübertragung über Telephonleitungen eingesetzt werden kann, kann es z.B. durch die Nummernwahl auf der Leitung zu impulsartigen Störungen kommen, die einen Übertragungsfehler bewirken, der unbedingt korrigiert werden muß. Die Datenübertragung muß aber nicht über Telephonleitungen erfolgen, sie kann im Rahmen der Erfindung über jede dafür geeignete Zweidrahtleitung

geschehen. Genauso können die unterschiedlichsten elektromagnetischen Störungen, auch systemexterne, auf die Datenübertragung ihren Einfluß haben.

Das bekannte ARQ (Automatic Repeat Request)-Verfahren wird zur Fehlerkorrektur üblicherweise so eingesetzt, daß die Datenübertragung auch bei beliebigen Störungen auf der Leitung fehlerfrei bleibt, wobei der Datendurchsatz jedoch stark absinken kann, da ein fehlerhaft übertragenes Datenpaket solange wiederholt wird, bis es fehlerfrei empfangen wird.

In weiterer Ausbildung der Erfindung kann daher vorgesehen sein, daß im Multiplex-Zeitrahmen der Datenübertragung im Zeitmittel eine vorbestimmbare Anzahl von Zeitschlitzen für ARQ (Automatic Repeat Request)-Übertragungswiederholungen vorgesehen sind.

Bei dieser Ausführungsform steht somit ständig Übertragungs-Überkapazität zur Verfügung. Wird ein Datenblock fehlerhaft empfangen, fordert der Empfänger nur so oft eine Wiederholung an, wie es im Rahmen der im Zeitmittel zur Verfügung stehenden Überkapazität möglich ist, sodaß unbeeinflußt durch die Übertragungswiederholungen der nominelle Datendurchsatz konstant gehalten werden kann. Im fehlerfreien Übertragungsfall wird ein höher redundantes Signal übermittelt. Die Dauer der Zeitspanne, über die die Zeitmittelung erfolgt, ist im wesentlichen durch die Speicherkapazität des eingesetzten ARQ-Puffers begrenzt.

Nach einer anderen Variante der Erfindung kann vorgesehen sein, daß bei fehlerhafter Übertragung die Daten, z.B. mittels eines Rechenalgorithmus, modifiziert übertragen werden.

Dadurch kann der bei der Übertragung auftretende Fehler, der durch das Abschneiden eines Teils der Amplitude bei Sende-Übersteuerung hervorgerufen wird, korrigiert werden.

In besonders bevorzugter Weise kann dabei vorgesehen sein, daß die Daten durch logische Inversion modifiziert werden.

Diese Inversionsoperation stellt einen sehr einfach berechenbaren Algorithmus dar, der ohne großen Aufwand realisierbar ist.

Weiters kann vorgesehen sein, daß die Schaltfrequenz einer Störquelle, z.B. ein Netzteil, mit einer der Trägerfrequenzen der diskreten Mehrtonmodulation synchronisiert wird.

Dadurch kann das auf frequenzselektive Störungen empfindliche DMT-Verfahren gegen bekannte Störquellen gesichert werden. Bei Synchronisation der Schaltfrequenz der Störquelle auf eine der Trägerfrequenzen der DMT-Modulation wirkt sich die Störung nur auf diese Trägerfrequenz und deren Vielfache aus, sodaß sie durch einen adaptiven Algorithmus kompensiert werden können.

Bei mehreren nebeneinander geführten Zweidrahtleitungen, auf denen jeweils Daten übertragen werden, ergibt sich üblicherweise ein Übersprechen, welches auf die Übertragung naturgemäß störend wirkt.

Gemäß einer anderen Ausführungsform des erfindungsgemäßen Verfahrens, bei welchem Daten über zwei oder mehr Zweidrahtleitungen, die zumindest teilweise in

Übersprechabstand geführt sind, übertragen werden, kann vorgesehen sein, daß der Zeitmultiplex-Betrieb (TDM) auf allen Zweidrahtleitungen synchron durchgeführt wird, sodaß auf allen Zweidrahtleitungen gleichzeitig entweder gesendet oder empfangen wird.
Dadurch wird immer zur gleichen Zeit entweder gesendet oder empfangen, sodaß eine störende Beeinflussung der einzelnen Empfänger durch nicht direkt verbundene Sender vermieden werden kann.
Im folgenden wird die Erfindung anhand eines in den Zeichnungen dargestellten Ausführungsbeispieles näher erläutert.
Es zeigt dabei:
Fig.1 ein Blockschaltbild zur Durchführung einer Ausführungsform des erfindungsgemäßen Verfahrens und
Fig.2 eine schematische Darstellung eines erfindungsgemäßen Zeitrahmens.
Eine bidirektionale Datenübertragung von digitalen Daten gemäß dem in Fig.1 dargestellten Blockschaltbild wird durchgeführt, indem beim Senden die aus einer Datenquelle 1,4 kommenden digitalen Daten im Sendeteil 50 zu einem analogen Sendesignal umgewandelt und über einen Leitungsübertrager 13 einer Zweidrahtleitung 100 an einen am Ende dieser Leitung 100 gelegenen Teilnehmer übertragen werden. Demgegenüber wird ein auf der Zweidrahtleitung 100 ankommendes Signal über den Leitungsübertrager 13 als Empfangssignal an den Eingang eines Empfangteils 51 geführt und dort in digitale Daten umgewandelt. Da beim erfindungsgemäßen Verfahren nie gleichzeitig gesendet und empfangen wird, kann an Stelle einer sonst üblichen Gabelschaltung der Leitungsübertrager 13 verwendet werden, wodurch die oft problematische Anpassung der Gabelschaltung an die Leitungsimpedanz von vornherein wegfällt. Ein durch eine Gabelschaltung bedingtes störendes Übersprechen, durch welches Signalreste vom Sender zum Empfänger derselben Teilnehmerseite gelangen, scheidet somit als Störquelle für dieses Verfahren aus.
In dem in Fig.1 gezeigten Ausführungsbeispiel ist der Sende- und Empfangsteil 50, 51 sowohl einer zentralen Datenstelle C (CENTRAL) alsauch einer peripheren Datenstelle R (REMOTE) in einem einzigen Blockschaltbild dargestellt, welches so zu verstehen ist, daß die zentrale Datenstelle C über den Übertrager 13, die Zweidrahtleitung 100 und einen weiteren Übertrager 13 mit der Datenstelle R verbunden ist. Jene Funktionseinheiten, die nur zur Datenstelle C bzw. R zugehörig sind, sind mit "ATU-C only" bzw. "ATU-R only" gekennzeichnet.
Ohne Beschränkung der allgemeinen Anwendbarkeit des erfindungsgemäßen Verfahrens sei als Ausführungsbeispiel einer asymmetrischen Datenübertragung ein Heimvideosystem beschrieben, bei welchem in der zentralen Datenstelle C die Videoinformation verschiedener Videos in einem Großrechner als Daten in komprimierter Form gespeichert und über eine periphere Datenstelle R abrufbar ist. Über einen bidirektionalen Steuerkanal wird die Steuerinformation zwischen den Datenstellen C und R ausgetauscht, wobei eine Datenrate von 64 kbit/s festgelegt ist. Diese Steuerinformation kann sich auf verschiedene vom Teilnehmer auszugebende Befehle, wie etwa PLAY, REWIND o.ä, wie sie von einem

Videorecorder bekannt sind sowie interne Steuerkommandos beziehen und ist in ihrer Menge vergleichsweise gering gegenüber der von der zentralen Datenstelle C ausgesendeten Breitbandinformation, die im wesentlichen die Videoinformation beinhaltet, die mit einer Datenübertragungsrate von 2, 048 Mbit/s nur in einer Richtung von C zu R gesendet wird.
Die genannten Datenraten können jedoch für das erfindungsgemäße Verfahren aber auch gänzlich anders, z.B. viel höher gewählt werden, wobei für die nur in eine Richtung zu übermittelnde Breitbandinformation auch eine Datenrate von etwa 50 Mbit/s bis 150 Mbit/s zur Verfügung gestellt werden kann. Die übertragene Information kann dabei jede Art von Sprach-, Bild- oder Dateninformation darstellen. Ebenso ist eine andere Rate für den bidirektionalen Steuerkanal ausführbar, der aber nicht nur Steuerfunktionen sondern alle möglichen Datenübertragungsfunktionen erfüllen kann.
Am eingangsseitigen Teil des Sendeteils 50 sind für die Datenstelle C zwei verschiedene Dateneingänge und für die Datenstelle R nur ein Dateneingang ausgebildet. An den ersten Eingang, der für C und R gleich ist, gelangt der Datenstrom aus der Datenquelle 1, die z.B. im wesentlichen Steuerbefehle aussendet, die über einen nachfolgenden Verwürfler 2 in einen diesem nachfolgenden Sendepuffer 3 gelangen, wobei die aus der Datenquelle 1 kommenden Daten im Verwürfler 2 nach einem vorbestimmbaren Algorithmus gewandelt werden. Dadurch wird ein länger andauernder, konstanter logischer Zustand verhindert und eine ausgeglichene statistische Verteilung der binären Zustände erreicht. Anschließend daran erfolgt im Sendepuffer 3 eine Zwischenspeicherung der verwürfelten Signale. In der Datenstelle R sind die aus dem Sendepuffer 3 austretenden Daten über eine Vorrichtung MUX mit anderen Daten, die im ARQ-Puffer 24 erzeugt werden und Wiederholanweisungen enthalten, gemultiplext.
Am zweiten Eingang des Sendeteils 50, der nur für die Datenstelle C ausgeführt ist, kommt der Datenstrom aus der Datenquelle 4, die die Breitbandinformation generiert, über einen nachfolgenden Verwürfler 5 und über einen ARQ (Automatic Request)-Puffer 6, der einen CRC-Generator enthält, über den eine Fehlerkorrekturkodierung erfolgt, an den zweiten Eingang des Sendeteiles 50. Die im Verwürfler 5 umgewandelten Daten werden im ARQ-Puffer 6 zwischengespeichert und bei fehlerhafter Übertragung wiederholt. Eine besondere. erfindungsgemäße ARQ-Übertragungstechnik wird weiter unten noch beschrieben.
Die über die Eingänge des Sendeteils 50 seriell eintreffenden Daten werden im Kodierer 7 zum Herabsetzen der Datenrate in vorbestimmbarer Länge zusammengefaßt und anhand einer Kodiertabelle einem entsprechenden Symbol zur weiteren Verarbeitung zugeordnet. Weiters wird dieses kodierte Signal in dem nachfolgenden DMT (Discrete Multi Tone)-Modulator 8 nach diesem bekannten Verfahren moduliert und über ein Hochpaß-Filter 9 geleitet, welches zur Vermeidung von Störeinflüssen im wesentlichen das Sprachfrequenzband unterdrückt. Das digitale Ausgangssignal dieses Hochpaß-Filters 9 wird über einen Digital-Analog-Wandler 10 in ein analoges Signal gewandelt, welches über ein Bandpaß-Filter 11 und anschließend über einen Verstärker 12 zum Wandler 13 gelangt. Das Bandpaß-Filter 11 erfüllt einerseits nochmals die Funktion des Hochpasses 11 und

andererseits schneidet es die durch den Analog-Digital-Wandler 10 hervorgerufenen hochfrequenten Spannungsspitzen ab. Die Frequenz der Analog-Digital-Wandlung ist zur Erfüllung des Abtasttheorems so gewählt, daß für die höchsten vorkommenden Frequenzen mindestens zweimal eine Abtastung durch den Analog-Digital-Wandler 10 erfolgt.
Der Sendeteil 50 und der Empfangsteil 51 sind durch eine TDM (Time Division Multiplex)-Einheit 30 gesteuert, sodaß erfindungsgemäß die zu sendenden und die zu empfangenden Daten durch Zeitmultiplexbetrieb getrennt werden, wobei der zugehörige Multiplex-Zeitrahmen in eine vorbestimmbare Anzahl N von Zeitschlitzen unterteilt wird, und davon eine Anzahl K von Zeitschlitzen des Zeitrahmens ausschließlich einer Übertragungsrichtung, z.B. Senden, und die restliche Anzahl N-K von Zeitschlitzen ausschließlich der anderen Übertragungsrichutng, z.B. Empfangen, zugeordnet wird. Dazu steuert die TDM-Einheit den Sendeteil 50 und den Empfangsteil 51, indem sie zur gegebenen Zeit diese aktiviert. Der Sendeteil 50 und der Empfangsteil 51 sind dabei nie gleichzeitig in Betrieb, wodurch die für die Steuerung benötigte Prozessorleistung entsprechend niedrig ausgelegt werden kann. Da dadurch auch eine Beeinflussung des eigenen Senders auf den Empfänger ausgeschlosssen ist, ist für den Analog-Digital-Wandler 16 des Empfängerteils nur eine geringe Auflösung erforderlich. Dieser Vorteil wirkt sich infolge der direkten Proportionalität von Auflösung und Preis bei Analog-Digital-Wandlern sehr kostengünstig aus.
Das erfindungsgemäße Verfahren hat den Vorteil eines relativ geringen Bandbreitenbedarfes und einer sehr geringen Komplexheit, die sich bei der Hardware bzw. bei der benötigten Rechnerleistung zeigt. Bei herkömmlichen Verfahren zur Trennung von Senden und Empfangen geht ein beträchtlicher Teil der Rechnerleistung für interne Kommunikation verloren, während beim erfindungsgemäßen Verfahrern diese Rechner-Hilfskapazität sehr gering gehalten werden kann.
Das erfindungsgemäße Verfahren hat dort seine Grenze, wo sich der Anteil des Sendens und Empfangens der 50%-Prozentgrenze nähert, da dann andere Verfahren etwa wie Echo-Cancelling o.ä. mit gleichgroßem oder kleinerem Aufwand durchgeführt werden können.
In Fig.2 ist der in Zeitschlitze unterteilte Zeitrahmen, wie er im erfindungsgemäßen Verfahren zur Anwendung gelangt, dargestellt. Die beiden Übertragungsrichtungen sind durch die Ausdrücke "upstream" und "downstream" gekennzeichnet. Der ganze Zeitrahmen ist in diesem Beispiel 20,625 ms lang und in verschiedene Schlitze zu 625 µs aufgeteilt, wobei die Mehrzahl der Daten in downstream-Richtung übertragen wird. Diese Aufteilung ist besonders dann von Vorteil, wenn in einer Übertragungsrichtung ein bidirektionaler Kanal mit geringer und ein unidirektionaler Kanal mit hoher Datenrate benötigt wird. In dem dargestellten Ausführungsbeispiel werden über den bidirektionalen Kanal durch die mit CONTROL bezeichneten Zeitschlitze in downstream- und upstream-Richtung Steuerbefehle und über den unidirektionalen Kanal durch die mit VIDEO bezeichneten 30 downstream-Zeitschlitze mit im Zeitmittel einem Hilfsschlitz Videoinformation übertragen. Diese Art der Übertragung kann für beliebige Informationen erfolgen.

Die Verteilung der Sende- bzw. Empfangskapazitäten ist den jeweiligen Verhältnissen durch Wahl der Anzahl der upstream bzw. downstream-Zeitschlitze anpaßbar. Bei sich ändernden Auslastungen kann dieses Verhältnis automatisch entsprechend dem aktuellen Bedarf abgestimmt werden. Die festgelegten Sende- und Empfangszeiten haben gegenüber einer Frequenzmultiplex-Übertragung den Vorteil, daß nicht gleichzeitig empfangene und zu sendende Daten verarbeitet werden müssen, wodurch die Rechnerleistung bzw. der Hardware-Aufwand entsprechend niedrig ausgelegt werden kann. In jedem DMT-Schlitz wird eine codierte und DMT-modulierte Dateneinheit übertragen.

Für ARQ-Übertragungswiederholungen wird gemäß einer erfindungsgemäßen Ausführungsform im Multiplex-Zeitrahmen der Datenübertragung im Zeitmittel eine vorbestimmbare Anzahl von Zeitschlitzen für ARQ-Übertragungswiederholungen vorgesehen sind. Dazu werden beim Senden der Daten diese ständig in den ARQ-Sendepuffer 6 eingeschrieben und von diesem wieder an den Kodierer 7 weitergegeben. Dabei werden die vom Puffer 6 abgehenden Daten schneller übertragen als dieser gefüllt wird. In der dabei entstehenden Lücke wird erneut jeweils der letzte Datenblock eingetragen, dieser wird jedoch empfängerseitig als wiederholter Block erkannt und automatisch beseitigt. Somit wird im fehlerfreien Übertragungsfall ständig mit Überkapazität gesendet, ohne daß der übertragene Informationsgehalt größer ist.

Sobald ein Übertragungsfehler auftritt, erkennt der Empfänger in der peripheren Datenstelle R den Fehler mittels seiner CRC- Fehlererkennung in der ARQ-Einheit 24 und gibt darauf den Befehl über den Multiplexer des Sendepuffers 3 zur Datenwiederholung weiter, der dann als Steuerinformation über den bidirektionalen Kanal gesendet wird. In der zentralen Datenstelle C wird diese Information nach Durchlaufen des Empfängerteils 51 im Empfängerpuffer 27 gedemultiplext und ein Steuerbefehl an den ARQ-Puffer 6 gegeben, die fehlerhafte Übertragung zu wiederholen.

Dafür steht in diesem Ausführungsbeispiel im Zeitmittel nur ein Hilfsschlitz zur Verfügung, was einer Überkapazität von 3,33% entspricht. Dauer und Anzahl der Hilfsschlitze sind in diesem Zusammenhang keiner Einschränkung unterworfen und können innerhalb des technisch Realisierbaren beliebig den jeweiligen Verhältnissen angepaßt werden.

Nach einer Fehlübertragung wird nun im darauffolgenden Zeitrahmen, die Wiederholungsübertragung durchgeführt, die sich über mehrere nacheinanderfolgende Zeitschlitze erstrecken kann. Gemittelt über die Zeit sollte in diesem Beispiel nur ein Zeitschlitz pro Rahmen für die Wiederholungen benutzt werden.

Die Zeitspanne, über die dabei das Zeitmittel berechnet wird, ist durch die Größe des ARQ-Pufferspeichers festgelegt. Sobald dieser mit Information vollgeschrieben ist, können keine weiteren Wiederholungen durchgeführt werden und der fehlerhafte Datenblock muß als transparent ausgegeben werden.

Gegenüber einem herkömmlichen ARQ-Verfahren ist die für die Datenwiederholungen festgelegte Zeitspanne im Zeitmittel fixiert. Dadurch kann es nicht passieren, daß aufgrund einer länger andauernden Störung die Übertragung solange wiederholt wird bis sie fehlerfrei

ist und damit die Übertragungszeit sich stark erhöht. Durch das bekannte ARQ-Verfahren wird die Datenübertragung auch bei beliebigen Störungen solange wiederholt, bis sie fehlerfrei empfangen wird, wodurch der Datendurchsatz aber sehr stark sinkt. Hingegen wird durch die feste Überkapazität, die zwischen 2 und 10%, vorzugsweise aber zwischen 3 und 5% liegt, im erfindungsgemäßen Verfahren die Übertragung nur so oft wiederholt, wie es im Rahmen der Überkapazität möglich ist, um den nominellen Datendurchsatz aufrecht zu erhalten. Kann bei mehreren aufeinanderfolgenden falschen Datenblöcken einer nicht mehr wiederholt und richtig empfangen werden, wird er transparent ausgegeben.

Bei einem durch die diskrete Mehrtonmodulation (DMT) modulierten Signal ist das Verhältnis von Spitzenwert zu Mittelwert sehr groß, sodaß ein Abkappen ("Clipping") der Signalspitze eine häufige Fehlerquelle darstellt. Um diesen Fehler auf einfache Weise zu korrigieren, kann nach einer fehlerhaften Datenübertragung die digitale Bitfolge beim Wiederholvorgang im Sender z.B. durch einen Rechenalgorithmus, modifiziert werden und dann erneut übertragen werden. Im Empfänger wird der verwendete Rechenalgorithmus entsprechend in Umkehrung angewendet und die Daten wiedergewonnen. Dadurch kann dieser Übertragungsfehler sehr effektiv ausgeschaltet werden. Im besonderen ist es schaltungs- oder rechentechnisch auf einfache Weise durchführbar, die fehlerhaften Daten in invertierter Form zu übertragen

Eine weitere Störquelle beim DMT-Verfahren ergibt sich aus der Schaltfrequenz der eingesetzten Spannungsversorgung, z.B. des Netzteils, da diese Schaltfrequenz im Übertragungsbereich liegt und somit als frequenzselektive Störung ihre Auswirkung zeigt. Hinzu kommt die Abhängigkeit dieser Störungen von anderen Einflußgrößen, etwa die gerade am Netzteil vorliegende Last. Diese Art von Störungen können verringert werden, indem die Schaltfrequenz des Netzteils auf eine der Trägerfrequenzen der DMT-Modulation synchronisiert wird. Damit wirkt sich diese Störung nur auf diese Trägerfrequenz und ihre Vielfache aus, sodaß sie sehr leicht durch einen adaptiven Algorithmus kompensiert werden können.

In Fig.1 ist weiters der dem Sendeteil 50 entsprechende Empfangsteil 51 dargestellt. Die über die Zweidrahtleitung 100 und den Übertrager 13 von der anderen Teilnehmerseite einlangenden Signale werden über einen Bandpaß 14 und über eine AGC (Automatic Gain Control)-Einheit, die unabhängig von den momentanen Signalverhältnissen auf der Leitung ein annähernd amplitudenkonstantes Signal erzeugt, an den Eingang eines zum Empfangsteil 51 gehörigen Analog-Digital-Wandlers 16 geführt, dessen Ausgang mit einem Hochpaß-Filter 17 verbunden ist. Das am Eingang des Hochpasses 17 anliegende Signal wird über einen AGC-Regelkreis 18 als Stellgröße zur AGC-Einheit 15 rückgeführt.

Nach dem Hochpaß 17 erfolgt die Demodulation des Signals, aus welchem nur in der peripheren Datenstelle R der mitübertragene Pilotton einer Pilot-AGC-Einheit 20 zugeführt wird, woraus in der Taktgewinnungseinheit 21 ein Referenzsignal für die Takterzeugungseinheit 31 der peripheren Datenstelle R gewonnen wird. Diese Takterzeugungseinheit 31 generiert für die TDM-Einheit 30 und für den Systemtakt die

Zeitbasis. Die Datenstelle C benötigt keine Taktgewinnungseinheit, da hier eine unabhängige Zeitbasis vorgesehen ist.

Die durch die Übertragungsstrecke bewirkten linearen Verzerrungen werden in einem an den DMT-Demodulator 19 anschließenden Entzerrer 22 mit update-Funktion beseitigt. Daran anschließend findet in einem Dekodierer 23 das Umschlüsseln entsprechend einer Dekodiertabelle statt, woraufhin am Ausgang des Dekodieres 23 wieder ein serieller Bitstrom vorliegt, der über zwei Ausgänge geführt wird. Der für Datenstelle C und R gleich ausgeführte erste Ausgang besteht aus einem Empfangs-Puffer 27 für Steuerinformation, einem nachfolgenden Entwürfler 28, in welchem die Daten in ihrer richtigen Reihenfolge wiederhergestellt werden und der Datensenke 29, die die gesendeten Steuerdaten empfängt. Der zweite Ausgang des Empfangsteils 51, welcher nur für die Datenstelle R vorgesehen ist, ist mit einem ARQ-Puffer 24 verbunden, der die übertragene Breitbandinformation aus der Datenstelle C zwischenspeichert, verifiziert und bei Bedarf über eine im ARQ-Puffer 24 integrierte Steuereinheit den Befehl zum nochmaligen Senden der fehlerhaft übertragenen Daten an den Multiplex-Eingang des Sendepuffers 3 gibt, der zur Datenstelle C rückübertragen wird. Am Ausgang des ARQ-Puffers 24 ist ein Entwürfler 25 und daran anschließend eine Datensenke 26 zur Übernahme der Breitbandinformation angeschlossen.

Werden Daten über zwei oder mehr Zweidrahtleitungen, die zumindest teilweise in Übersprechabstand geführt sind, übertragen, kann es geschehen, daß durch die gegenseitige induktive Beeinflussung der Zweidrahtleitungen es zum Übersprechen kommt. Besonders in einer zentralen Datenanlage, in der viele abgehende Zweidrahtleitungen nebeneinander geführt werden, kann es zu dieser unerwünschten Störung kommen.

Bei einer Ausführungsform des erfindungsgemäßen Verfahrens wird diese Art der Störung vermieden, indem der Zeitmultiplex-Betrieb auf allen Zweidrahtleitungen synchron durchgeführt wird. Dies bedeutet, daß gleichzeitig über alle Zweidrahtleitungen entweder gesendet oder empfangen wird, sodaß keine Beeinflussung mehr möglich ist.

Patentansprüche

1. Verfahren zur bidirektionalen Datenübertragung über eine Zweidrahtleitung, wobei digitale Daten zum Senden oder Empfangen, z.B. mittels diskreter Mehrtonmodulation (DMT), moduliert bzw. demoduliert und die zu sendenden und zu empfangenden Daten, z.B. durch Frequenzmultiplexbetrieb (FDM) oder Echoauslöschung (EC), getrennt werden, **dadurch gekennzeichnet**, daß die zu sendenden und zu empfangenden Daten durch Zeitmultiplexbetrieb (TDM) getrennt werden, wobei der zugehörige Multiplex-Zeitrahmen in eine vorbestimmbare Anzahl N von Zeitschlitzen unterteilt wird, und davon eine Anzahl K von Zeitschlitzen ausschließlich einer Übertragungsrichtung, z.B. Senden, und die restliche Anzahl (N-K) von Zeitschlitzen ausschließlich der anderen Übertragungsrichtung, z.B. Empfangen, zugeordnet wird.

2. Verfahren nach Anspruch 1, **dadurch gekennzeichnet**, daß N gleich 30 und K gleich 1 ist.

3. Verfahren nach Anspruch 1 oder 2, **dadurch gekennzeichnet**, daß im Multiplex-Zeitrahmen der Datenübertragung im Zeitmittel eine vorbestimmbare Anzahl von Zeitschlitzen für ARQ (Automatic Repeat Request)-Übertragungswiederholungen vorgesehen sind.

4. Verfahren nach Anspruch 1, 2 oder 3, **dadurch gekennzeichnet**, daß bei fehlerhafter Übertragung die Daten, z.B. mittels eines Rechenalgorithmus, modifiziert wiederholt übertragen werden.

5. Verfahren nach Anspruch 4, **dadurch gekennzeichnet**, daß die Daten durch logische Inversion modifiziert werden.

6. Verfahren nach Anspruch 1 bis 5, **dadurch gekennzeichnet**, daß die Schaltfrequenz einer Störquelle, z.B. ein Netzteil, mit einer der Trägerfrequenzen der diskreten Mehrtonmodulation synchronisiert wird.

7. Verfahren nach Anspruch 1 bis 6, wobei Daten über zwei oder mehr Zweidrahtleitungen, die zumindest teilweise in Übersprechabstand geführt sind, übertragen werden, **dadurch gekennzeichnet**, daß der Zeitmultiplex-Betrieb (TDM) auf allen Zweidrahtleitungen synchron durchgeführt wird, sodaß auf allen Zweidrahtleitungen gleichzeitig entweder gesendet oder empfangen wird.

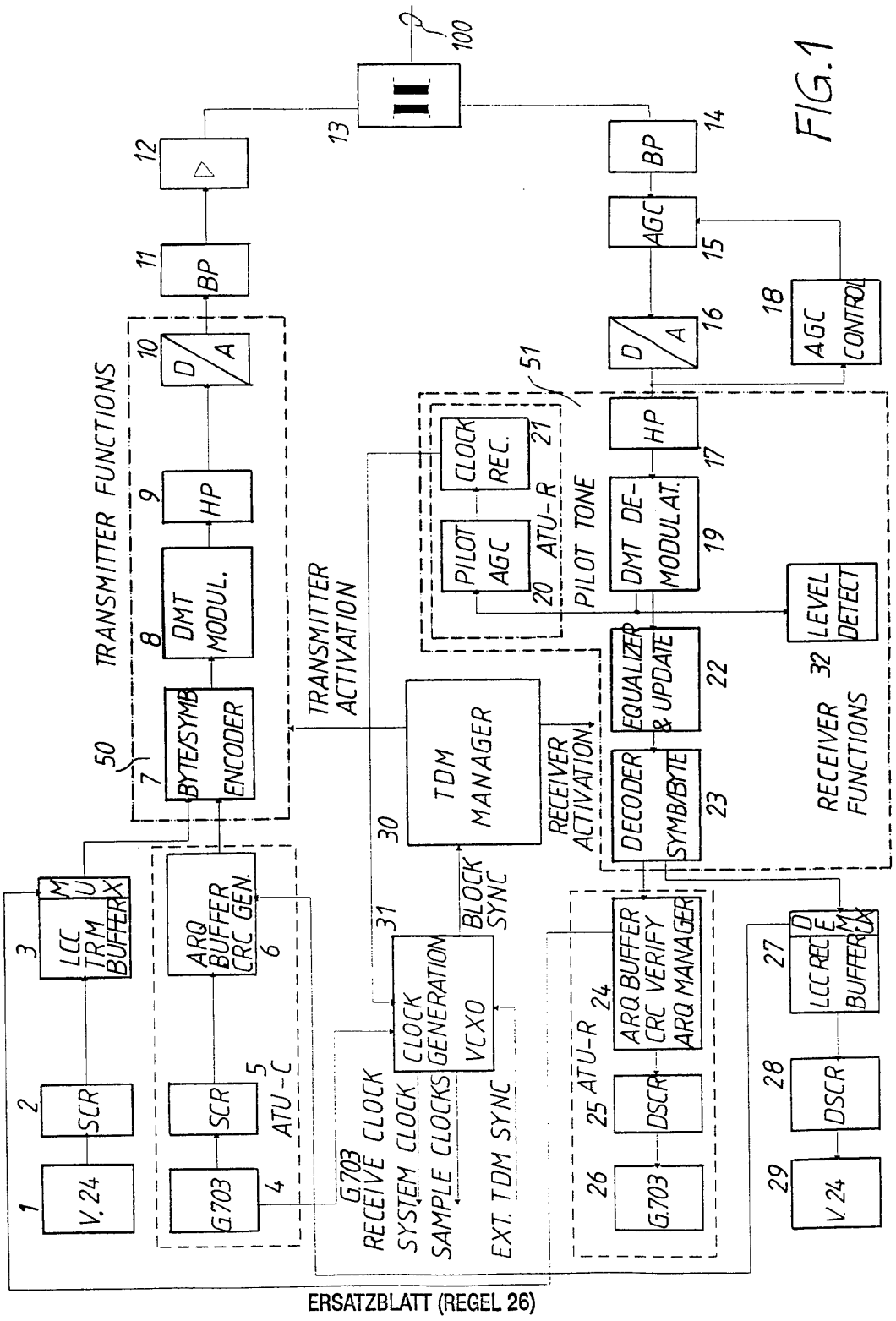
TRANSMITTER FUNCTIONS
TRANSMITTER ACTIVATION
PILOT TONE
RECEIVER FUNCTIONS
RECEIVER ACTIVATION
TDM MANAGER
BLOCK SYNC
RECEIVE CLOCK
SYSTEM CLOCK
SAMPLE CLOCKS
EXT. TDM SYNC
V.24
G.703
SCR
LCC TRM BUFFER
MUX
ARQ BUFFER CRC GEN.
BYTE/SYMB ENCODER
DMT MODUL.
HP
D/A
BP
ATU-C
CLOCK GENERATION
VCXO
ATU-R
ARQ BUFFER CRC VERIFY ARQ MANAGER
DSCR
LCC REC BUFFER
DEMUX
PILOT AGC
CLOCK REC.
DMT DE-MODULAT.
EQUALIZER & UPDATE
DECODER SYMB/BYTE
LEVEL DETECT
AGC
AGC CONTROL

FIG.1

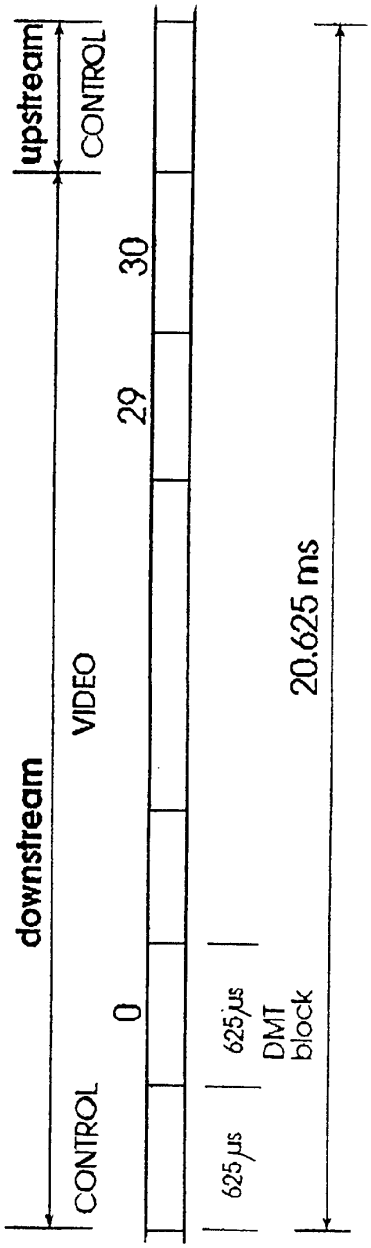
upstream
CONTROL
downstream
VIDEO
CONTROL
0
29
30
625 µs
625 µs
DMT
block
20.625 ms

FIG.2

INTERNATIONAL SEARCH REPORT

Intern nal Application No
PCT/AT 96/00112

A. CLASSIFICATION OF SUBJECT MATTER
IPC 6 H04L5/14

According to International Patent Classification (IPC) or to both national classification and IPC

B. FIELDS SEARCHED

Minimum documentation searched (classification system followed by classification symbols)
IPC 6 H04L H04N

Documentation searched other than minimum documentation to the extent that such documents are included in the fields searched

Electronic data base consulted during the international search (name of data base and, where practical, search terms used)

C. DOCUMENTS CONSIDERED TO BE RELEVANT

Category °	Citation of document, with indication, where appropriate, of the relevant passages	Relevant to claim No.
X	US,A,4 796 255 (WESTBROOK ET AL.) 3 January 1989 see column 1, line 17 - line 59 see column 2, line 45 - line 68	1,2
A	see figures 1,2 ---	3-7
X	SINGAPORE ICCS '94. CONFERENCE PROCEEDINGS. (CAT. NO.94TH0691-6), PROCEEDINGS OF ICCS '94, SINGAPORE, 14-18 NOV. 1994, ISBN 0-7803-2046-8, 1994, NEW YORK, NY, USA, IEEE, USA, pages 571-575 vol.2, XP002016282 YONG HOON KIM ET AL.: "Dynamic frame control for TDD based wireless LAN" see page 572, paragraph 2.1 see figures 1,2 --- -/--	1,2

[X] Further documents are listed in the continuation of box C.

[X] Patent family members are listed in annex.

° Special categories of cited documents :

"A" document defining the general state of the art which is not considered to be of particular relevance

"E" earlier document but published on or after the international filing date

"L" document which may throw doubts on priority claim(s) or which is cited to establish the publication date of another citation or other special reason (as specified)

"O" document referring to an oral disclosure, use, exhibition or other means

"P" document published prior to the international filing date but later than the priority date claimed

"T" later document published after the international filing date or priority date and not in conflict with the application but cited to understand the principle or theory underlying the invention

"X" document of particular relevance; the claimed invention cannot be considered novel or cannot be considered to involve an inventive step when the document is taken alone

"Y" document of particular relevance; the claimed invention cannot be considered to involve an inventive step when the document is combined with one or more other such documents, such combination being obvious to a person skilled in the art.

"&" document member of the same patent family

1

Date of the actual completion of the international search	Date of mailing of the international search report
18 October 1996	12. 11. 96

Name and mailing address of the ISA	Authorized officer
European Patent Office, P.B. 5818 Patentlaan 2 NL - 2280 HV Rijswijk Tel. (+31-70) 340-2040, Tx. 31 651 epo nl, Fax (+31-70) 340-3016	Ghigliotti, L

Form PCT/ISA/210 (second sheet) (July 1992)

INTERNATIONAL SEARCH REPORT

Intern. ..onal Application No
PCT/AT 96/00112

C.(Continuation) DOCUMENTS CONSIDERED TO BE RELEVANT

Category °	Citation of document, with indication, where appropriate, of the relevant passages	Relevant to claim No.
X	IEEE TRANSACTIONS ON VEHICULAR TECHNOLOGY, NOV. 1994, USA, vol. 43, no. 4, ISSN 0018-9545, pages 934-945, XP002016283 WAI-CHOONG WONG ET AL.: "Shared time division duplexing: an approach to low-delay high-quality wireless digital speech communications" see paragraph II, pages 935-936 see figure 1 ---	1,2
X	GB,A,2 145 609 (GEN. ELECTRIC CO. PLC) 27 March 1985 see abstract see page 2, line 41 - line 54 see figure 2 ---	1,2
X	US,A,4 841 521 (AMADA ET AL.) 20 June 1989 see abstract see figures 1,3 -----	1,2

1

Form PCT/ISA/210 (continuation of second sheet) (July 1992)

INTERNATIONAL SEARCH REPORT

Information on patent family members

Intern ..al Application No
PCT/AT 96/00112

Patent document cited in search report	Publication date	Patent family member(s)	Publication date
US-A-4796255	03-01-89	NONE	
GB-A-2145609	27-03-85	US-A- 4644525	17-02-87
US-A-4841521	20-06-89	CA-A- 1274928	02-10-90
		DE-A- 3717854	10-12-87
		JP-A- 63099642	30-04-88

Form PCT/ISA/210 (patent family annex) (July 1992)

INTERNATIONALER RECHERCHENBERICHT

Intern. nales Aktenzeichen
PCT/AT 96/00112

A. KLASSIFIZIERUNG DES ANMELDUNGSGEGENSTANDES
IPK 6 H04L5/14

Nach der Internationalen Patentklassifikation (IPK) oder nach der nationalen Klassifikation und der IPK

B. RECHERCHIERTE GEBIETE

Recherchierter Mindestprüfstoff (Klassifikationssystem und Klassifikationssymbole)
IPK 6 H04L H04N

Recherchierte aber nicht zum Mindestprüfstoff gehörende Veröffentlichungen, soweit diese unter die recherchierten Gebiete fallen

Während der internationalen Recherche konsultierte elektronische Datenbank (Name der Datenbank und evtl. verwendete Suchbegriffe)

C. ALS WESENTLICH ANGESEHENE UNTERLAGEN

Kategorie*	Bezeichnung der Veröffentlichung, soweit erforderlich unter Angabe der in Betracht kommenden Teile	Betr. Anspruch Nr.
X	US,A,4 796 255 (WESTBROOK ET AL.) 3.Januar 1989 siehe Spalte 1, Zeile 17 - Zeile 59 siehe Spalte 2, Zeile 45 - Zeile 68	1,2
A	siehe Abbildungen 1,2 ---	3-7
X	SINGAPORE ICCS '94. CONFERENCE PROCEEDINGS. (CAT. NO.94TH0691-6), PROCEEDINGS OF ICCS '94, SINGAPORE, 14-18 NOV. 1994, ISBN 0-7803-2046-8, 1994, NEW YORK, NY, USA, IEEE, USA, Seiten 571-575 vol.2, XP002016282 YONG HOON KIM ET AL.: "Dynamic frame control for TDD based wireless LAN" siehe Seite 572, Absatz 2.1 siehe Abbildungen 1,2 --- -/--	1,2

[X] Weitere Veröffentlichungen sind der Fortsetzung von Feld C zu entnehmen

[X] Siehe Anhang Patentfamilie

* Besondere Kategorien von angegebenen Veröffentlichungen :
"A" Veröffentlichung, die den allgemeinen Stand der Technik definiert, aber nicht als besonders bedeutsam anzusehen ist
"E" älteres Dokument, das jedoch erst am oder nach dem internationalen Anmeldedatum veröffentlicht worden ist
"L" Veröffentlichung, die geeignet ist, einen Prioritätsanspruch zweifelhaft erscheinen zu lassen, oder durch die das Veröffentlichungsdatum einer anderen im Recherchenbericht genannten Veröffentlichung belegt werden soll oder die aus einem anderen besonderen Grund angegeben ist (wie ausgeführt)
"O" Veröffentlichung, die sich auf eine mündliche Offenbarung, eine Benutzung, eine Ausstellung oder andere Maßnahmen bezieht
"P" Veröffentlichung, die vor dem internationalen Anmeldedatum, aber nach dem beanspruchten Prioritätsdatum veröffentlicht worden ist
"T" Spätere Veröffentlichung, die nach dem internationalen Anmeldedatum oder dem Prioritätsdatum veröffentlicht worden ist und mit der Anmeldung nicht kollidiert, sondern nur zumVerständnis des der Erfindung zugrundeliegenden Prinzips oder der ihr zugrundeliegenden Theorie angegeben ist
"X" Veröffentlichung von besonderer Bedeutung; die beanspruchte Erfindung kann allein aufgrund dieser Veröffentlichung nicht als neu oder auf erfinderischer Tätigkeit beruhend betrachtet werden
"Y" Veröffentlichung von besonderer Bedeutung; die beanspruchte Erfindung kann nicht als auf erfinderischer Tätigkeit beruhend betrachtet werden, wenn die Veröffentlichung mit einer oder mehreren anderen Veröffentlichungen dieser Kategorie in Verbindung gebracht wird und diese Verbindung für einen Fachmann naheliegend ist
"&" Veröffentlichung, die Mitglied derselben Patentfamilie ist

1

Datum des Abschlusses der internationalen Recherche	Absendedatum des internationalen Recherchenberichts
18.Oktober 1996	12. 11. 96

Name und Postanschrift der Internationale Recherchenbehörde	Bevollmächtigter Bediensteter
Europäisches Patentamt, P.B. 5818 Patentlaan 2 NL - 2280 HV Rijswijk Tel. (+31-70) 340-2040, Tx. 31 651 epo nl, Fax (+31-70) 340-3016	Ghigliotti, L

Formblatt PCT/ISA/210 (Blatt 2) (Juli 1992)

C.(Fortsetzung) ALS WESENTLICH ANGESEHENE UNTERLAGEN

Kategorie°	Bezeichnung der Veröffentlichung, soweit erforderlich unter Angabe der in Betracht kommenden Teile	Betr. Anspruch Nr.
X	IEEE TRANSACTIONS ON VEHICULAR TECHNOLOGY, NOV. 1994, USA, Bd. 43, Nr. 4, ISSN 0018-9545, Seiten 934-945, XP002016283 WAI-CHOONG WONG ET AL.: "Shared time division duplexing: an approach to low-delay high-quality wireless digital speech communications" siehe Absatz II, Seiten 935-936 siehe Abbildung 1 ---	1,2
X	GB,A,2 145 609 (GEN. ELECTRIC CO. PLC) 27.März 1985 siehe Zusammenfassung siehe Seite 2, Zeile 41 - Zeile 54 siehe Abbildung 2 ---	1,2
X	US,A,4 841 521 (AMADA ET AL.) 20.Juni 1989 siehe Zusammenfassung siehe Abbildungen 1,3 -----	1,2

1

INTERNATIONALER RECHERCHENBERICHT

Angaben zu Veröffentlichungen, die zur selben Patentfamilie gehören

Intern. ..ales Aktenzeichen
PCT/AT 96/00112

Im Recherchenbericht angeführtes Patentdokument	Datum der Veröffentlichung	Mitglied(er) der Patentfamilie		Datum der Veröffentlichung
US-A-4796255	03-01-89	KEINE		
GB-A-2145609	27-03-85	US-A-	4644525	17-02-87
US-A-4841521	20-06-89	CA-A-	1274928	02-10-90
		DE-A-	3717854	10-12-87
		JP-A-	63099642	30-04-88

Formblatt PCT/ISA/210 (Anhang Patentfamilie)(Juli 1992)

PCT WORLD INTELLECTUAL PROPERTY ORGANIZATION
International Bureau

INTERNATIONAL APPLICATION PUBLISHED UNDER THE PATENT COOPERATION TREATY (PCT)

(51) International Patent Classification 6 : H04M	A2	(11) International Publication Number: **WO 99/20027**
		(43) International Publication Date: 22 April 1999 (22.04.99)

(21) International Application Number: PCT/US98/21442

(22) International Filing Date: 9 October 1998 (09.10.98)

(30) Priority Data:
60/061,689 10 October 1997 (10.10.97) US

(71) Applicant *(for all designated States except US)*: AWARE, INC. [US/US]; 40 Middlesex Turnpike, Bedford, MA 01730 (US).

(72) Inventors; and
(75) Inventors/Applicants *(for US only)*: GROSS, Richard, W. [US/US]; 21 Millett Street, Arlington, MA 02174 (US). GRESZCZUK, John, A. [US/US]; 18 Lowell Drive, Stow, MA 01775 (US). KRINSKY, David, M. [US/US]; 4 Ayer Road, Acton, MA 01720 (US). TZANNES, Marcos [US/US]; 665 Lowell Street, Unit #53, Lexington, MA 02173 (US). TZANNES, Michael, A. [US/US]; 17 Carley Road, Lexington, MA 02173 (US).

(74) Agents: O'DONNELL, Martin, J. et al.; Cesari and McKenna, LLP, 30 Rowes Wharf, Boston, MA 02110 (US).

(81) Designated States: AL, AU, BA, BB, BG, BR, CA, CN, CU, CZ, EE, GE, HU, ID, IL, IS, JP, KP, KR, LC, LK, LR, LT, LV, MG, MK, MN, MX, NO, NZ, PL, RO, SG, SI, SK, SL, TR, TT, UA, US, UZ, VN, YU, ARIPO patent (GH, GM, KE, LS, MW, SD, SZ, UG, ZW), Eurasian patent (AM, AZ, BY, KG, KZ, MD, RU, TJ, TM), European patent (AT, BE, CH, CY, DE, DK, ES, FI, FR, GB, GR, IE, IT, LU, MC, NL, PT, SE), OAPI patent (BF, BJ, CF, CG, CI, CM, GA, GN, GW, ML, MR, NE, SN, TD, TG).

Published
Without international search report and to be republished upon receipt of that report.

(54) Title: SPLITTERLESS MULTICARRIER MODEM

(57) Abstract

A modem for use in Digital Subscriber Line communications transmits and receives data over the local subscriber loop in common with voice information over the loop, while avoiding the need for voice/data splitters. The modem responds to disruptions associated with "disturbance events" such as on–hook to off–hook transitions and the like by rapidly switching between pre–stored channel parameter control sets defining communications over the loop under varying conditions. In addition to changing parameter control sets responsive to a disturbance event, the modem may also change transmission power levels and other system parameters such as frequency domain equalizer characteristics. Further, provisions are made for reduced bandwidth communications under selected conditions.

FOR THE PURPOSES OF INFORMATION ONLY

Codes used to identify States party to the PCT on the front pages of pamphlets publishing international applications under the PCT.

AL	Albania	**ES**	Spain	**LS**	Lesotho	**SI**	Slovenia
AM	Armenia	**FI**	Finland	**LT**	Lithuania	**SK**	Slovakia
AT	Austria	**FR**	France	**LU**	Luxembourg	**SN**	Senegal
AU	Australia	**GA**	Gabon	**LV**	Latvia	**SZ**	Swaziland
AZ	Azerbaijan	**GB**	United Kingdom	**MC**	Monaco	**TD**	Chad
BA	Bosnia and Herzegovina	**GE**	Georgia	**MD**	Republic of Moldova	**TG**	Togo
BB	Barbados	**GH**	Ghana	**MG**	Madagascar	**TJ**	Tajikistan
BE	Belgium	**GN**	Guinea	**MK**	The former Yugoslav Republic of Macedonia	**TM**	Turkmenistan
BF	Burkina Faso	**GR**	Greece			**TR**	Turkey
BG	Bulgaria	**HU**	Hungary	**ML**	Mali	**TT**	Trinidad and Tobago
BJ	Benin	**IE**	Ireland	**MN**	Mongolia	**UA**	Ukraine
BR	Brazil	**IL**	Israel	**MR**	Mauritania	**UG**	Uganda
BY	Belarus	**IS**	Iceland	**MW**	Malawi	**US**	United States of America
CA	Canada	**IT**	Italy	**MX**	Mexico	**UZ**	Uzbekistan
CF	Central African Republic	**JP**	Japan	**NE**	Niger	**VN**	Viet Nam
CG	Congo	**KE**	Kenya	**NL**	Netherlands	**YU**	Yugoslavia
CH	Switzerland	**KG**	Kyrgyzstan	**NO**	Norway	**ZW**	Zimbabwe
CI	Côte d'Ivoire	**KP**	Democratic People's Republic of Korea	**NZ**	New Zealand		
CM	Cameroon			**PL**	Poland		
CN	China	**KR**	Republic of Korea	**PT**	Portugal		
CU	Cuba	**KZ**	Kazakstan	**RO**	Romania		
CZ	Czech Republic	**LC**	Saint Lucia	**RU**	Russian Federation		
DE	Germany	**LI**	Liechtenstein	**SD**	Sudan		
DK	Denmark	**LK**	Sri Lanka	**SE**	Sweden		
EE	Estonia	**LR**	Liberia	**SG**	Singapore		

SPLITTERLESS MULTICARRIER MODEM

Cross-reference to related applications:

This application is based in part on the following applications filed by one or more of the inventors herein:

U.S. Provisional Patent Application Serial No. 60/061,689, filed October 10, 1997 by Richard Gross, John Greszcuk, Dave Krinsky, Marcos Tzannes, and Michael Tzannes and entitled "Splitterless Multicarrier Modulation For High Speed Data Transport Over telephone Wires";

U.S. Provisional Patent Application Serial No. **** filed January 16, 1998 by Richard Gross and Michael Tzannes and entitled "Dual Rate Multicarrier Transmission System In A Splitterless Configuration";

U.S. Provisional Patent Application Serial No. *** filed January 21, 1998 by Richard Gross, Marcos Tzannes and Michael Tzannes and entitled "Dual Rate Multicarrier Transmission System In A Splitterless Configuration".

U.S. Provisional Patent Application Serial No. *** filed January 26, 1998 by Richard Gross, Marcos Tzannes and Michael Tzannes and entitled "Multicarrier SystemWith Dynamic Power Levels".

The disclosures of these applications are incorporated by reference herein in their entirety.

Background of the invention

A. Field of the invention.

The invention relates to telephone communication systems and, more particularly, to telephone communication systems which utilize discrete multitone modulation to transmit data over digital subscriber lines.

B. Prior art.

The public switched telephone network (PSTN) provides the most widely available form of electronic communication for most individuals and businesses. Because of its

ready availability and the substantial cost of providing alternative facilities, it is increasingly being called upon to accommodate the expanding demands for transmission of substantial amounts of data at high rates. Structured originally to provide voice communication with its consequent narrow bandwidth requirements, the PSTN increasingly relies on digital systems to meet the service demand.

A major limiting factor in the ability to implement high rate digital transmission has been the subscriber loop between the telephone central office (CO) and the premises of the subscriber. This loop most commonly comprises a single pair of twisted wires which are well suited to carrying low-frequency voice communications for which a bandwidth of 0-4 kHz is quite adequate, but which do not readily accommodate broadband communications (i.e., bandwidths on the order of hundreds of kilohertz or more) without adopting new techniques for communication.

One approach to this problem has been the development of discrete multitone digital subscriber line (DMT DSL) technology and its variant, discrete wavelet multitone digital subscriber line (DWMT DSL) technology. These and other forms of discrete multitone digital subscriber line technology (such as ADSL, HDSL, etc.) will commonly be referred to hereinafter generically as "DSL technology" or frequently simply as "DSL". The operation of discrete multitone systems, and their application to DSL technology, is discussed more fully in "Multicarrier Modulation For Data Transmission: An Idea Whose Time Has Come.", IEEE Communications Magazine, May, 1990, pp. 5-14.

In DSL technology, communications over the local subscriber loop between the central office and the subscriber premises is accomplished by modulating the data to be transmitted onto a multiplicity of discrete frequency carriers which are summed together and then transmitted over the subscriber loop. Individually, the carriers form discrete, non-overlapping communication subchannels of limited bandwidth; collectively, they form what is effectively a broadband communications channel. At the receiver end, the carriers are demodulated and the data recovered from them.

The data symbols that are transmitted over each subchannel carry a number of bits that may vary from subchannel to subchannel, dependent on the signal-to-noise ratio (SNR) of the subchannel. The number of bits that can accommodated under specified

communication conditions is known as the "bit allocation" of the subchannel, and is calculated for each subchannel in a known manner as a function of the measured SNR of the subchannel and the bit error rate associated with it.

The SNR of the respective subchannels is determined by transmitting a reference signal over the various subchannels and measuring the SNR's of the received signals. The loading information is typically calculated at the receiving or "local" end of the subscriber line (e.g., at the subscriber premises, in the case of transmission from the central telephone office to the subscriber, and at the central office in the case of transmission from the subscriber premises to the central office) and is communicated to the other (transmitting or "remote") end so that each transmitter-receiver pair in communication with each other uses the same information for communication. The bit allocation information is stored at both ends of the communication pair link for use in defining the number of bits to be used on the respective subchannels in transmitting data to a particular receiver. Other subchannel parameters such as subchannel gains, time and frequency domain equalizer coefficients, and other characteristics may also be stored to aid in defining the subchannel.

Information may, of course, be transmitted in either direction over the subscriber line. For many applications, such as the delivery of video, internet services, etc. to a subscriber, the required bandwidth from central office to subscriber is many times that of the required bandwidth from subscriber to central office. One recently developed service providing such a capability is based on discrete multitone asymmetric digital subscriber line (DMT ADSL) technology. In one form of this service, up to two hundred and fifty six subchannels, each of 4312.5 Hz bandwidth, are devoted to downstream (from central office to subscriber premises) communications, while up to thirty two subchannels, each also of 4312.5 Hz bandwidth, provide upstream (from subscriber premises to central office) communications. Communication is by way of "frames" of data and control information. In a presently-used form of ADSL communications, sixty eight data frames and one synchronization frame form a "superframe" that is repeated throughout the transmission. The data frames carry the data that is to be transmitted; the synchronization or "sync" frame provides a known bit sequence that is used to synchronize the transmitting and receiving modems and that also facilitates determination of transmission subchannel characteristics such as signal-to-noise ratio ("SNR"), among others.

Although such systems do in fact provide a significantly increased bandwidth for data communications, special precautions are required to avoid interference with, and from, ordinary voice communications and associated signaling that may be taking place over the subscriber line at the same time that the broadband data is being carried. The signaling activities commonly include, for example, the transmission of ringing signals, busy tone, off-hook indications, on-hook indications, dialing signals, and the like, and the actions commonly accompanying them, e.g., taking the phone off-hook, replacing it on-hook, dialing, etc. These voice communications and their associated signaling, commonly referred to as "plain old telephone service" or POTS , presently are isolated from the data communications by modulating the data communications onto frequencies that are higher than those used for POTS ; the data communications and POTS signals are thereafter separately retrieved by appropriate demodulation and filtering. The filters which separate the data communications and the POTS are commonly referred to as "POTS splitters".

The voice and data communications must be separated at both the central office and the subscriber premises, and thus POTS splitters must be installed at both locations. Installation at the central office is generally not a significant problem, since a single modem at the central office can serve a large number of subscribers, and technicians are commonly available there. Installation at the customer premises is a problem. Typically, a trained technician must visit the premises of every subscriber who wishes to use this technology in order to perform the requisite installation. In connection with this, extensive rewiring may have to be done, dependent on the desired location of the ADSL devices. This is expensive and discourages the use of DSL technology on a widespread basis.

DSL systems also experience disturbances from other data services on adjacent phone lines (such as ADSL, HDSL, ISDN, or T1 service). These services may commence after the subject ADSL service is already initiated and, since DSL for internet access is envisioned as an always-on service, the effect of these disturbances must be ameliorated by the subject ADSL transceiver.

Summary of the invention

A. Objects of the invention

Accordingly, it is an object of the invention to provide an improved digital subscriber line communication system.

Further, it is an object of the invention to provide a digital subscriber line communication system which is compatible with existing voice communication services and which does not require the use of POTS splitters.

Another object of the invention is to provide an improved digital subscriber line communication system that efficiently handles data communications despite random interruptions associated with concurrent carriage of voice communications or disturbances that arise from concurrent data services on adjacent phone lines.

B. Summary description of the invention.

Splitterless Operation

The invention described herein is directed to enhancing the accuracy and reliability of communications in systems using discrete multitone technology (DMT) to communicate data over digital subscriber lines (DSL) in the presence of voice communications and other disturbances. For simplicity of reference, the apparatus and method of the present invention will hereinafter be referred to collectively simply as a modem. One such modem is typically located at a customer premises such as a home or business and is "downstream" from a central office with which it communicates; the other is typically located at the central office and is "upstream" from the customer premises. Consistent with industry practice, the modems are often referred to herein as "ATU-R" ("ADSL Transceiver Unit, Remote", i.e., located at the customer premises) and "ATU-C" ("ADSL Transceiver Unit, Central Office"). Each modem includes a transmitter section for transmitting data and a receiver section for receiving data, and is of the discrete multitone type, i.e., it transmits data over a multiplicity of subchannels of limited bandwidth. Typically, the upstream or ATU-C modem transmits data to the downstream or ATU-R modem over a first set of subchannels, commonly the higher-frequency subchannels, and receives data from the downstream or ATU-R modem over a second, usually smaller, set of subchanels, commonly the lower-frequency subchannels.

Heretofore, such modems have required POTS splitters when used on lines carrying both voice and data. In accordance with the present invention, we provide a data modem for use in discrete multitone communication systems which carry voice and data communications simultaneously and which operate without the special filtering provided by POTS splitters; they are thus "splitterless" modems. In the absence of certain disturbances, referred to herein as "disturbance events" and discussed more fully hereinafter, the modem of our invention transmits data at a rate determined by the transmission capabilities of the system without regard to such disturbances. Preferably, this is the maximum data rate that can be provided for the particular communications subchannel, subject to predefined constraints such as maximum bit error rate, maximum signal power, etc. that may be imposed by other considerations. On the occurrence of a disturbance event on the communications channel, however, the modem of the present invention detects the event and thereupon modifies the subsequent communication operations. Among other responses, the modem changes the bit allocations (and thus possibly the corresponding bit rate) and the subchannel gains among the subchannels, so as to limit interference with and from voice communication activities or to compensate for disturbances from other services or sources sufficiently close to the subject subscriber line as to couple interfering signals into the line. The bit allocations and subchannel gains may be altered for communications in either direction, i.e., upstream, downstream, or both. Effectively, this matches the subchannel capacity to the selected data rate so as to ensure that the pre-specified bit error rate is not exceeded. On cessation of the disturbance event, the system is returned to its initial, high-rate, state.

Disturbance Events

Of particular interest to the present invention are disturbance events that arise from the occurrence of voice communication activities over the data link concurrent with the transmission of data over the link. These activities comprise the voice communications themselves, or activities such as signaling associated with such communications, together with the response to such activities, such as taking a phone off-hook or placing it on-hook. Disturbance events also include other disruptive disturbances such as interference from adjacent phone lines caused, for example, by the presence of other DSL services, ISDN services, T1 services, etc. The cessation of a disturbance event may itself also

comprise a disturbance event. For example, the change of a voice communications device such as a telephone from "on-hook" to "off-hook" status can seriously disrupt communications at a modem unless compensated for as described herein or unless otherwise isolated from the modem by means of a POTS splitter as was heretofore done; it is thus a disturbance event that must be dealt with. However, the return of such a device to "on-hook" status can also significantly change the channel characteristics and is therefore also a disturbance event that must be dealt with. The invention described herein efficiently addresses these and other disturbance events.

Channel Control Parameter Sets

In accordance with the present invention, the change in bit allocation is accomplished rapidly and efficiently by switching between stored parameter sets which contain one or more channel control parameters that define data communications by the modem over the subchannels. The parameters sets are preferably determined at the time of initialization of the modem and stored in registers or other memory (e.g., RAM or ROM) in the modem itself, but may instead be stored in devices external to, and in communication with, the modem, e.g., in personal computers, on disk drives etc.

In accordance with one embodiment of this invention, the channel control parameter sets comprise at least a primary set of channel control parameters, stored in a primary channel control table, which defines communications in the absence of voice communication activities or other disturbances; and one or a plurality of secondary sets of channel control parameters, stored in a secondary channel control table, that define data communications responsive to one or more disturbance events. When communicating under control of the primary channel control table, the modem is described hereinafter as being in its "primary" state; when communicating under control of the secondary channel control table, the modem is described hereinafter as being in its "secondary" state. The modem is switched between parameter sets in its primary and secondary states responsive to the occurrence and cessation of disturbance events, as well as among parameter sets in the secondary table responsive to a change from one disturbance event to another. Since the parameter sets are pre-stored and thus need not be exchanged at the time of a disturbance event, the switch is made quickly, limited essentially only by the speed with which the disturbance event is detected and signaled to the other modem participating in the com-

munication, typically not more than a second or so. This greatly reduces the interruption in communications that would otherwise be required by a complete reinitialization of the modems that typically extends over six to ten seconds, and its associated exchange channel control parameters.

As noted previously, in DSL communications, information transmission typically takes place in both directions, i.e. the upstream or ATU-C modem transmits downstream to the ATU-R modem over a first set of subchannels, and the downstream or ATU-R modem transmits upstream to the ATU-C modem over a second, different, set of subchannels. The transmitter and receiver at each modem, accordingly, maintain corresponding channel tables to be used by them in transmitting data to, and receiving data from, the other modem with which it forms a communications pair. Certain parameters such as time and frequency domain equalizer coefficients and echo canceller coefficients are "local" to the receiver with which they are associated, and thus need be maintained only at that receiver. Other parameters such as bit allocations and channel gains are shared with the other modem with which a given modem is in communication (the "modem pair") and thus are stored in both modems, so that during a given communication session, the transmitter of one modem will use the same set of values of a shared parameter as the receiver of the other modem, and vice versa.

In particular, in DSL communications, a key parameter is the number of bits that are to be transmitted over the various subchannels. This is known as the "bit allocation" for the respective subchannels, and is a key element of the primary and secondary parameter sets. It is calculated in a known manner for each subchannel based on the channel SNR, the acceptable bit error rate, and the noise margin of the subchannel. Another important element is the gain for each of the subchannels, and is thus preferably also included in the primary and secondary parameter sets. Thus, each receiver stores a primary channel control table and a secondary channel control table, each of which contains one or more parameter sets that define the subchannel bit allocations to be used by it and by the transmitter of the other modem in communicating with it, and each transmitter also stores a primary channel control table and a secondary channel control table, each of which define the subchannel bit allocations and gains to be used by it for transmission to the other receiver and for reception at that receiver. For the closest match to the actual line over

which they are to communicate, those portions of the primary and secondary channel control table at each receiver that define the parameters for use in transmitting to the particular receiver are preferably determined at the modem at which the receiver is located (the "local modem"), as described herein, but it will be understood from the detailed description herein that such tables may also be determined in other ways.

As long as communications over the subscriber line are not impaired by a disturbance event, the modems use the primary channel control table to define communications over the subchannels. When, however, a disturbance event occurs, the modem that detects the event (herein designated "the local modem"; typically, this will be the subscriber modem, ATU-R, particularly in cases of activation of a voice communications device by the subscriber) notifies the other modem of the need to change to the secondary channel control table, and identifies the specific bit allocation set and/or gain set in the secondary table when more than one such set exists. The notification procedure is described in more detail hereinafter. Communications thereafter continue in accordance with the appropriate parameter set (i.e., bit allocations, subchannel gains, and possibly other parameters) from the secondary channel control table. This condition continues until a new disturbance event is detected, at which time the modems revert to the primary channel control table (in the event the disturbance is simply the cessation of communication-disrupting disturbances or interferences) or to a different parameter set secondary channel control table (in the event that the disturbance event is the occurrence of another communication-disrupting disturbance or interference).

In addition to changes in bit allocation among the subchannels, and changes in subchannel gains, further changes may also be made in such communication parameters as time domain equalizer coefficients, frequency domain equalizer coefficients, and the like. These parameters may also be stored in the channel control tables for use in controlling communications, or may be stored in separate tables. Additionally, changes in power level (and corresponding changes in bit allocation and other communication parameters) for communications in either the upstream or the downsteam direction, or both, may be made, and sets of control parameters may be defined on these power levels as well for use in controlling communications. These changes are described in fuller detail below.

As presently contemplated, each modem on the subscribed side of the DSL line will communicate with a corresponding dedicated modem on the central office side. Thus, each central office modem (ATU-C) need store the primary and secondary tables for a specific subscriber only. However, efficiencies may be achieved whenever it is unnecessary to provide service to each subscriber at all times. Under these circumstances, a central office modem may be shared among two or more subscribers, and switched among them as called for. In such a case, the ATU-C will store or have access to a set of channel control tables for each subscriber modem it is to service.

Table Initialization

In the preferred embodiment of the invention, the primary and secondary channel control tables are determined in an initial "training" session ("modem initialization") in which known data is transmitted by one modem, measured on reception by the other, and the tables calculated based on these measurements. Typically, the training session occurs when the modem is first installed at the subscriber premises or at the central office, and the procedure thus "particularizes" the modem to the environment in which it will operate. This environment includes, in addition to the subject data modem, one or more voice communication devices such as telephone handsets, facsimile machines, and other such devices which communicate over a voice frequency subchannel, typically in the range 0-4 kHz. A primary channel control table, comprising a parameter set including at least a set of subchannel bit allocations, and preferably also subchannel gains, is calculated with each device inactive. A secondary channel control table comprising one or more bit communication parameter sets (bit allocations, gains, etc.) is calculated with each voice communication device activated separately, and/or with groups of devices activated concurrently. The tables so determined are then stored at the receiver of one modem and additionally are communicated to the transmitter of the other modem and stored there for use by both modems in subsequent communications.

An alternative approach determines the secondary channel control table (including one or more parameter sets comprising the table) by calculation from the primary channel control table. This is accomplished most simply, for example, by taking one or more of the parameters (e.g., the bit allocation parameter which defines the number of bits to be used for communication across the respective subchannels) as a percentage, fixed or

varying across the subchannels, of the corresponding primary parameters; or as determined in accordance with a percentage, fixed or varying across the subchannels, of the SNR's of the respective subchannels; or as determined in accordance with a different bit error rate than provided for in the primary channel control table; or by other techniques.

As a specific example, a number of different sets of bit allocations in the secondary channel control table may be determined as differing percentages (fixed or varying across the subchannels) of the corresponding set of bit allocations in the primary channel control table. Each secondary bit allocation set corresponds to the effect commonly produced by a particular device or class of devices, e.g., a telephone handset, a facsimile machine, etc., as determined by repeated measurements on such devices, and thus may be taken to represent the expected effect of that device over a range of communication conditions, e.g., with a particular type of subscriber line wiring, at a given range from the central office, etc. The subchannel gains may also then be adjusted based on the redetermined bit allocations. The bit allocations and subchannel gains so determined form new secondary parameter sets which may be used responsive to detection of the disturbance events they characterize, and which substitute for determination of the secondary bit allocations and gains on the basis of measurements of the actual disturbances being compensated for.

Alternatively, the secondary channel control table may be determined by adding a power margin to the calculations for each of the entries of the primary table of a magnitude sufficient to accommodate the interference from activation of the voice communications device or from other disturbances. This has the effect of reducing the constellation size for the table entries. The margin may be uniform across the table entries, or may vary across them, as may the percentage factor when that approach is used. Multiple secondary bit allocation sets may be defined by this approach, each based on a different power margin.

One example of the use of varying margins is in response to changes in crosstalk (capacitively coupled noise due to nearby xDSL users, where the "x" indicates the possible varieties of DSL such as ADSL, HDSL, etc.). This crosstalk is, in general, more predictable than signaling events associated with voice communications. The crosstalk spectrum of xDSL sources is well characterized: see, for example, the T1.413 ADSL standard published by the American National Standards Institute. From a primary channel control

table associated with a single full initialization, a secondary table comprising a family of bit allocation sets can be calculated, each corresponding to a different crosstalk level. As the number of xDSL systems (and thus crosstalk levels) changes, the ADSL link can quickly switch to one of these automatically generated sets.

The secondary channel control table in the present invention may also be adapted dynamically, e.g., by performing measurements on the transmitted information in each superframe during data communications and monitoring these measurements to determine when the channel performance has sufficiently changed that a different bit allocation set, and possibly different gain set, should be used. We have found that the SNR provides a readily measurable and reliable indicator of the required bit allocations and gains.

In particular, we have found that measurements of the SNR levels across a number of the subchannels during a given communications condition or state provides a "fingerprint" which may reliably be used to quickly select a parameter set, such as the set of bit allocations or the set of gains, for use in subsequent communications during that state. These measurements may be made, for example, on the sync frame that occurs in each superframe or, more generally, during the transmission of reference frames. When the SNR's change by more than a defined amount during communications, the modem at which the measurement is made searches the stored parameter sets for a set whose SNRs on the corresponding subchannels is closest to the measured SNRs, and selects that set for use in subsequent communications. If no parameter set is found within defined limits, the system may be switched to a default state, or a complete reinitialization may be called for, corresponding to a defined pattern of SNR's across some or all of the subchannels, should be used. SNR measurements may also be made on the data carrying signals themselves, i.e., a decision-directed SNR measurement.

Instead of using a multiplicity of secondary subchannel control parameter sets as described above, a simplified approach may construct and use a single secondary set based on a composite of the bit allocation or other characteristics of the individual devices. In one embodiment, the composite is formed by selecting, for each subchannel, the minimum bit allocation exhibited by any device for that subchannel, or the most severe characteristic of any other disturbances, thus forming a single "worst case" set that may be used when any device is activated, regardless of the specific device or disturbance ac-

tually present. Or it may be determined as the actual or calculated capacity of the line when all devices are actually or theoretically actuated simultaneously, or all disturbances are present, or both concurrently. Bit allocations sets may also be determined for combinations of subsets of such devices and disturbances. A similar approach may be used to handle the situation where several devices are activated at the same time, and the effects of other disturbances such as cross talk, etc. may also be incorporated into a composite set.

A particular parameter set of the secondary channel control table remains in use for the duration of the session in which the voice device is active or until another change of state occurs, e.g., a further voice device is activated or some other disturbance takes place. When this occurs, the local modem renews its identification procedure to enable determination of the appropriate parameter set for the new conditions. At the end of the session in which the voice device is active, the device returns to inactive (i.e., "on-hook") status and the system reverts to its original ("on-hook") status in which the primary channel control table once again is used for communications between the central office and the subscriber.

Switching the subchannel parameter sets in accordance with the present invention is extremely fast. It can be accomplished in an interval as short as several frames, and thus avoids the lengthy (e.g., several second) delay that would otherwise accompany determination, communication, and switching of newly-determined sets. Further, it avoids communicating new parameter sets at a time when communications have been impaired and error rates are high. Thus, it minimizes disruption to the communication process occasioned by disturbance events.

Detecting Disturbance Events

During subsequent data communications, identification of the device that is activated is achieved in one of a number of ways. In one embodiment of the invention, a specific activation signal is transmitted from the device to the modem on the same side of the subscriber line as the device (referred to herein as "the local modem") on activation of the device. This signal may be transmitted over the communications line to which the device and the local modem are connected or it may be sent over a dedicated connection

between the device and the local modem.

In the preferred embodiment of the invention, the local modem monitors the subscriber line to which it and the device are connected and detects a change in line characteristics when the device is activated. For example, the signal to noise ratio (SNR) of the various subchannels can quickly be measured and can be used to identify the particular device that is activated. During multiple sets of initializations, corresponding to multiple communication conditions caused by the devices or by other interferences, the SNR measure for each subchannel is determined for each of the conditions to be tracked (i.e., no devices activated, devices activated separately, two or more devices activated concurrently, adjacent channel interference, etc.) and the measures stored, along with identification of the particular parameter set or sets with which they are associated. When a device is activated, the SNR measurements are used to quickly identify the particular device or devices that have been activated, and the local modem can thereafter switch to the appropriate secondary table.

Disturbance events may also be detected in accordance with the present invention by monitoring selected transmission characteristics that are dependent on these events. These may comprise, in addition to any characteristic SNR accompanying them, such measures as errors in the cyclic redundancy code (CRC) that accompanies transmissions and changes in the error rate of this code; changes in the amplitude, frequency or phase of a pilot tone on the subchannels; or other such indicia. Forward error correction code (FEC) is typically used in ADSL transceivers, and changes in the error rate characteristics of this code, such as how many errors have occurred, how many have been corrected, how many are uncorrected, and the like, can be particularly useful in detecting disturbance events.

In monitoring these characteristics, we distinguish between changes caused by momentary or transient events such as lightning or other such burst noise disturbances, and those associated with disturbance events, the latter continuing for a significant interval (e.g., on the order of seconds or more). In particular, in embodiments that monitor CRC errors or error rates in accordance with the present invention, a switch from one parameter set to another is provided when the errors extend over a number of frames or when the error rate changes by a defined amount for a time greater than a defined mini-

mum. For example, on the occurrence of an off-hook event , a severe form of disturbance to data communications over a subscriber loop, the number of CRC errors suddenly increases and remains at an increased level until it is dealt with. This is distinguished from the occurrence of a transient disturbance such as a lightning strike which causes a momentary increase in CRC errors that does not persist as long as the system has not lost synchronization.

Thus, in accordance with the present invention, the detection of an initial change in the CRC error rate over a number of frames in excess of a defined threshold is one example of the detection of a disturbance event that will result in switching parameter sets. Similar procedures may be undertaken in response to measurement of the signal-to-noise ratio of the subchannel in order to detect a disturbance event based on this characteristic. The decision as to whether a disturbance event has occurred may be based on measurements on a single subchannel; on a multiplicity of subchannels (e.g., the decision to switch parameter sets will be made when more than a defined number of subchannels detect a disturbance event); or the like.

An alternative technique for detecting a disturbance event in accordance with the present invention is the use of a monitor signal, e.g., a pilot tone whose amplitude, frequency, phase or other characteristic is monitored during data transmission. A sudden change in one or more of the monitored characteristics from one frame to another, followed by a smaller or no change in subsequent frames, indicates a disturbance event to which the modem should respond. The monitor signal may comprise a dedicated signal carried by one of the subchannels; a signal carried on a separate control subchannel; a disturbance event itself (e.g., ringing tone, dial tone presence, or other common telephone signals); or other signals.

Communicating The Occurrence of Disturbance Events

After a disturbance event is detected and the appropriate parameter set corresponding to the event is identified, the identification is communicated to the remote modem by means of a selection signal to enable it also to switch to the corresponding parameter set in the secondary table. The selection signal may be in the form of a message transmitted over one or more subchannels or using a predetermined protocol for an em-

bedded operations channel, or it may comprise one or more tones that identify the particular parameter set. ADSL systems use a "guard band" of several subchannels between the sets of subchannels used for upstream and downstream transmission. This guard band may be used to transmit the selection tone or tones. In cases where there is only a single parameter set to be designated, the selection signal may comprise a simple flag (an element that has only two states, i.e., on/off, present/absent, etc.) that is sent to the remote modem to select the set.

In a further embodiment of the invention, use is made of the frame counters at the ATU-R and ATU-C modems that are commonly provided in DSL systems. On detecting a disturbance event, the ATU-R modem notifies the ATU-C modem of the event and specifies a frame at which the change in parameter set, or change in power level and any accompanying change in other parameters, is to take place. The specification may be direct (i.e., the notification specifies a particular frame number at which the change to the secondary table is to be made) or indirect (i.e., on receipt of the notification, the change to the secondary table is made at one of a predetermined number of frames, e.g., the next frame number ending in "0", or in "00", etc., or the nth frame after receiving the notification, where n is some number greater than 0). On reaching the designated frame, both modems (i.e., ATU-R and ATU-C) switch to the new bit allocation set, power level, and other designated parameters.

Alternatively, on detection of a disturbance event, the modems perform a "fast retrain" in order to characterize communications under the new operating conditions and determine a power and/or bit allocation set to be used for the communications. A fast retrain performs only a limited subset of the full initialization procedures, e.g., bit allocation and subchannel gain determination,. The retraining modem (typically the modem local to the disturbance initiating the retraining) then compares the newly determined parameter set with previously stored sets. If the newly-determined set is the same as a previously stored set, a message, flag, or tone is communicated by one modem to the other to designate which of the stored secondary allocation sets is to be used. Otherwise, the newly determined set is used for communications. In the latter event, it must be communicated to the other modem in the communication pair, and communications may be interrupted while this occurs. Nonetheless, on cessation of the event which necessitated a

change in parameter sets, the system may simply revert to the primary parameter set, without need for recommunication of that set and thus without further interrupting communications. With proper care in initialization, in most cases a sufficient array of parameter sets may be defined and exchanged at the outset as to avoid the need for subsequent reinitialization in response to most disturbances.

Changing Power Levels

In addition to changing one or more parameter sets in the modem in response to a disturbance event, in accordance with the preferred embodiment of the present invention we also preferably change the communications power level in either the upstream or the downstream direction, or both, in order to further enhance reliable communications. Typically, the change is a reduction in the power level in the upstream direction so as to minimize interference with the voice communications, as well as to reduce echo into the downstream signal, and it will be so described herein. However, it should be understood that there will be some occasions when an increase in power level is called for, such as when interference from adjacent data services requires a higher power level in order to maintain a desired data rate or bit error level, and such a change is accommodated by the present invention in the same manner as that of a decrease. Further, a change in downstream power level may be called for when line conditions change to such an extent that excessive power would otherwise be fed into the downstream channel from the upstream modem

In theory, and in a perfectly linear system, upstream communications activities should have no effect on concurrent voice communications since the two activities occur in separate, non-overlapping frequency bands. However, the telephone system in fact is not a linear system, and nonlinearities in the system can and do inject image signals from the upstream subchannel into the voice subchannel, and possibly into the downstream subchannel as well (i.e., echo), thus producing detectable interference. In accordance with another aspect of the present invention, this effect is reduced below the level of objection by reducing the upstream power level (the power level at which the subscriber or downstream modem transmits to the central office or upstream modem) by a given amount or factor when conditions dictate, e.g., when a voice communications device is off-hook and leakage from the data communications being conducted interferes with the

voice communications.

The amount of power reduction may be set in advance. For example, we have found that a nine db reduction in this power (relative to that typically used in ADSL applications using splitters to separate the data and POTS signals) is sufficient in most cases of common interest; under these circumstances, the system operates in one of two alternative power levels at all times. Alternatively, the downstream modem may select one of several different power levels for use, based on the communication conditions prevailing at the time resultant from the disturbance event. For example, the downstream modem may be activated to send a test signal into one or more upstream subchannels and to monitor the leakage (i.e., the echo) of this signal into one or more downstream subchannels as determined, for example, by the SNRs on these subchannels; the power level at which the downstream modem transmits upstream may then be adjusted accordingly in order to minimize the effects of the echo. Commonly, the downstream transmit power is determined by the ATU-R, since the ATU-R is closest to the cause of the disturbance event. In this event, the ATU-R uses a message, flag, or tone to inform the ATU-C of the desired power level to be used for transmission. In either case, at the end of a session, the power level reverts to that used in the "on-hook" state.

In selecting the desired power level, the transmitting modem signals the receiving modem in the communications-pair of the desired change (including the designation of a particular power level from among several power levels, where appropriate), and thereafter implements the change, including switching to a new parameter set associated with that power level. In another embodiment of the invention, the receiving modem detects the power level change at the transmitting modem and switches to a parameter set associated with that power level; upstream communications (i.e., from the ATU-R to the ATU-C) are thereafter conducted at the new power level until the disturbance event (e.g., off-hook condition, etc.) terminates.

While much of the above has been described in terms of a change in power level in the upstream communications from the subscriber modem to the central office modem, it should be noted that a change in power level in the opposite direction may also sometimes be called for. This may be the case, for example, on short subscriber loops (e.g., less than a mile), where the reduced line loss consequent on the greater proximity to the central

office may result in the central office initially transmitting at an excessive power level. In such cases, the central office or ATU-C modem performs the role previously performed by the subscriber or ATU-R modem, and vice versa, and a change in power level and other parameters on the downstream communications may be performed as described above. Further, it should also be understood that while it is expected that the power change will most commonly be one that reduces the power level used to communicate, it may in some cases increase it. This will occur, for example, when crosstalk from adjacent services requires an increase in power level of the subject service in order to compensate for the crosstalk.

Changing Other Parameters

A further important change made in response to detecting a disturbance event is a change in the frequency domain equalizers ("FDQ's") associated with each subchannel. These equalizers compensate for the differing distortions (e.g., amplitude loss, phase delay, etc.) suffered by the data during transmission over the subchannel. Typically, they comprise finite impulse response filters with complex coefficients. The coefficients are set during the "initialization" or "training" phase of modem setup. They may subsequently be adjusted based on reference (known) data in reference frames or sync frames transmitted over the communication subchannel. In accordance with the present invention, these filters are adjusted responsive to the transmitted reference data when a disturbance event is detected. The coefficient updating may be performed on all subchannels, or selectively on those whose change in error rates, signal-to-noise ratios, or other error indicia, indicate a disturbance event.

In accordance with one embodiment of the present invention, the coefficients of the frequency domain equalizers for communications both in the absence of a disturbance event or disturbance ("primary FDQ coefficients") and in the presence of such an event or disturbance ("secondary FDQ coefficients") are computed and stored during the initialization or training period. Thereafter, these coefficients are switched responsive to a disturbance event, as is the case with the channel control tables, and are returned to an initial state on the cessation of such an event.

In accordance with another embodiment of the invention, the FDQ coefficients are

recomputed responsive to detection of a disturbance event and then used throughout the remainder of the communications session in place of the earlier-stored secondary FDQ tables. The recomputation is accomplished in a short "retrain" session in which known reference data is transmitted between the ATU-R and ATU-C . The received data is compared with the known data and the new FDQ coefficients are determined accordingly. In addition to the frequency domain equalizer coefficients, time domain equalizer coefficients and echo cancellation coefficients may also be determined and stored. Such coefficients are local to the particular receiver, and thus need not be communicated to the other modem of the communications pair. Accordingly, any such retrain will be extremely fast, and any consequent disruption to communication limited.

Excessive Disturbances

In some cases a particular device may cause such interference with communications that compensation for that device by the methods described herein is not practical. This may occur, for example, with antiquated telephones or with particularly complex in-home wiring. In such a case, it is desirable to minimize the disruption caused by such a device by inserting a simple in-line filter between the device and the subscriber line. The filter may comprise, for example, a simple low-pass filter of not more than a cubic inch in volume and a pair of standard connectors such as RJ11 connectors through which the filter connects to the device on one side and to the subscriber line on the other. Unlike POTS splitters, such a connector needs no trained technician to install it, and thus presents no barrier, cost or otherwise, to acceptance of ADSL modems as described herein. Such a device may be detected by measuring the nonlinear distortion of the device when it is activated. This is done by monitoring the echo on the line caused by that device.

Reduced Rate Communications

A further improvement in the operation of the modem of the present invention resides in confining the bandwidth of the downstream transmission to a subset of that normally provided in ADSL communications. This reduces the processing demands on both the local (i.e., central office) and remote (subscriber premises) modems, thereby facilitating the provision of subscriber premises modems at prices more acceptable to consumer, non-business, use; additionally, it further minimizes interference between data transmis-

sion and voice communications. For example, limiting the number of subchannels used by the modem to one hundred and twenty eight as opposed to two hundred and fifty six reduces the downstream bandwidth from 1.1 MHz to approximately 552 kHz. When the modem is used with modems that normally provide a greater number of subchannels for such communications, the bit allocations and gains for the subchannels above one hundred and twenty eight are preferably nulled, i.e., set to zero.

The invention is preferably operable with modems that do not have the capabilities described herein, as well, of course, with modems that do. Accordingly, the modem of the present invention identifies its capabilities, preferably during initialization, preparatory to data exchange with another modem. In accordance with the preferred embodiment of the invention, this is preferably done by signaling between the modems that are to participate in communications. The signaling identifies the type of modems in communication and their characteristics of significance to the communication session. For example, one form of ADSL transceiver uses a reduced number of subchannels (typically, thirty two subchannels upstream and one hundred twenty eight subchannels downstream) and provides lower bandwidth communications. A modem having full ADSL capabilities that encounters a reduced-rate modem can then adjust its transmission and reception parameters to match the reduced-rate modem. This may be done, for example, by transmission from one modem to the other of a tone that is reserved for such purposes.

In particular, in accordance with the present invention, on initiation of communications between a central office modem and a subscriber premises modem, the modems identify themselves as "full rate" (i.e., communicating over two hundred and fifty six subchannels) or "reduced rate" (e.g., communicating over some lesser number of subchannels, e.g., one hundred and twenty eight). The communication may be performed via a flag (two-state, e.g., "on/off", "present/absent"), a tone or tones, a message (n-state, n>2), or other form of communication, and may be initiated at either end of the communication subchannel, i.e., either the central office end or the customer premises end.

Brief description of the drawings

The invention description below refers to the accompanying drawings, of which:

Figure 1 is a block and line diagram of a conventional digital subscriber line

(DSL) system using POTS splitters that is characteristic of the prior art;

Figure 2 illustrates an illustrative bit allocation and gains table used in the apparatus of Figure 1;

Figure 3 is a block and line diagram of a splitterless DSL system in accordance with the present invention;

Figure 4 is a block diagram of a splitterless transceiver in accordance with the present invention;

Figures 5A-5C illustrates channel control tables constructed and used in accordance with the present invention;

Figure 6 is a diagram of one form of disturbance event detector in accordance with the present invention;

Figure 7 illustrates the use of a frame counter for communicating the switching decision to the remote modem;

Figure 8 illustrates the preferred procedure used for performing a fast retrain of the modems in accordance with the present invention;

Figure 9 illustrates the manner in which channel control tables may readily be selected in accordance with the present invention; and

Figure 10 illustrates alternative configuration for interconnection of the modems of the present invention.

Detailed description of an illustrative embodiment

Figure 1 shows an ADSL communications system of the type heretofore used incorporating "splitters" to separate voice and data communications transmitted over a telephone line. As there shown, a telephone central office ("CO") 10 is connected to a remote subscriber 12 ("CP: Customer Premises") by a subscriber line or loop 14. Typically, the subscriber line 14 comprises a pair of twisted copper wires; this has been the traditional medium for carrying voice communications between a telephone subscriber or customer and the central office. Designed to carry voice communications in a bandwidth of approximately 4 kHz (kilohertz), its use has been greatly extended by DSL technology.

The central office is, in turn, connected to a digital data network ("DDN") 16 for sending and receiving digital data, as well as to a public switched telephone network ("PSTN") 18 for sending and receiving voice and other low frequency communications. The digital data network is connected to the central office through a digital subscriber line access multiplexer ("DSLAM") 20, while the switched telephone network is connected to the central office through a local switch bank 22. The DSLAM 20 (or its equivalent, such as a data enabled switch line card) connects to a POTS "splitter" 24 through an ADSL transceiver unit -central office ("ATU-C") 26. The local switch 20 also connects to the splitter.

The splitter 24 separates data and voice ("POTS") signals received from the line 14. At the subscriber end of line 14, a splitter 30 performs the same function. In particular, the splitter 30 passes the POTS signals from line 14 to the appropriate devices such as telephone handsets 31, 32, and passes the digital data signals to an ADSL transceiver unit-subscriber ("ATU-R") 34 for application to data utilization devices such as a personal computer ("PC") 36 and the like. The transceiver 34 may advantageously be incorporated as a card in the PC itself; similarly, the transceiver 26 is commonly implemented as a line card in the multiplexer 20.

In this approach, a communication channel of a given bandwidth is divided into a multiplicity of subchannels, each a fraction of the subchannel bandwidth. Data to be transmitted from one transceiver to another is modulated onto each subchannel in accordance with the information-carrying capacity of the particular subchannel. Because of differing signal-to-noise ("SNR") characteristics of the subchannels, the amount of data loaded onto a subchannel may differ from subchannel to subchannel. Accordingly, a "bit allocation table" (shown as table 40 at transceiver 26 and table 42 at transceiver 34) is maintained at each transceiver to define the number of bits that each will transmit on each subchannel to the receiver to which it is connected. These tables are created during an initialization process in which test signals are transmitted by each transceiver to the other and the signals received at the respective transceivers are measured in order to determine the maximum number of bits that can be transmitted from one transceiver to the other on the particular line. The bit allocation table determined by a particular transceiver is then transmitted over the digital subscriber line 14 to the other transceiver for use by the other

transceiver in transmitting data to that particular transceiver or to any similar transceiver connected to the line 14. The transmission must, of course, be done at a time when the line is not subject to disturbances which may interfere with communications. This is a significant limitation, and restricts the utilization of this approach.

Referring now to figure 2, a bit allocation table 42 such as is used in the customer premises equipment is shown in further detail. Table 40, used at the central office, is essentially the same in construction and operation and will not further be described. Table 42 has two sections, a first section, 42a, which defines certain communication parameters such as bit allocation capacity and subchannel gain parameters that characterize the respective subchannels and which the transmitter section of transceiver 34 will use in transmitting a signal to the other transceiver (26) with which it is in communication; and a section 42b that defines the parameters that the receiver section of transceiver 34 will use in receiving a signal transmitted from the other transceiver. Communications take place over a plurality of subchannels, here shown, for purposes of illustration only, as subchannels "9", "10", etc. in the transmitter section, and subchannels "40", "41", etc. in the receiver section. In a full-rate ADSL system, there are up to two hundred and fifty six such subchannels, each of bandwidth 4.1 kHz. For example, in one embodiment of the inventin, upstream communications (i.e., from the customer premises to the central telephone office) are conducted on subchannels 8 to 29; downstream communications (from the central office to the customer premises) are conducted on subchannels 32 to 255; subchannels 30 and 31 form a guard band between upstream and downstream communications that may be used for signaling as described hereinafter.

For each subchannel ("SC") 50, a field 52 defines the number of bits ("B") that are to be transmitted over that subchannel by the transmitter of a communications or modem pair, and received by the receiver of that pair, consistent with the prevailing conditions on the subchannel, e.g., measured signal-to-noise ratio (SNR), desired error rate, etc.; column 54 defines the corresponding gains ("G") of the subchannels. A first section, 42a, of the table specifies the bit allocations and gains that transceiver 34 will use in transmitting "upstream" to the transceiver 26; and a second section, 42b, specifies the bit allocations and gains that transceiver 34 will use in receiving transmissions from the transceiver 26. Transceiver 26 has a corresponding table 40 which is the mirror image of table 42, that is,

the bit allocations specified for transmission by transceiver 34 are the same as those specified for reception by transceiver 26 and correspondingly for reception by transceiver 34 and transmission by transceiver 26. The table typically may also include a field specifying the gain 54 associated with the particular subchannel.

As noted above, the splitters 24, 30 combine the data and voice communications applied to them for transmission and once again separate these from each other on reception. This is accomplished by means of high pass and low pass filters which separate the low-frequency voice communications from the high-frequency data. The need to utilize such splitters, however, imposes a severe impediment to the widespread adoption of DSL technology by the consumer. In particular, the installation of a splitter at the subscriber premises requires a trip to the premises by a trained technician. This can be quite costly, and will deter many, if not most, consumers from taking advantage of this technology. Nor is incorporating splitters in the communications devices themselves a viable option, since this not only increases the cost of such devices, but requires either the purchase of all new devices or the retrofit of the older devices, which again requires skilled help to accomplish. In accordance with the present invention, we eliminate the splitter at least at the customer premises, thereby enabling adoption and use of DSL modems by the end user without the intervention of trained technical personnel. This, however, requires significant changes in the structure and operation of the DSL transceivers or modems, and the present invention addresses these changes.

In particular, figure 3 shows a DSL transmission system in accordance with the invention in which the composite voice-data signal transmitted from the central office to the subscriber premises is passed to both the subscriber voice equipment 31, 32 and to the data transceiver or modem 34' without the interposition of a splitter at the subscriber premises. In figure 3, components that are unchanged from figure 1 retain the same numbering; components that are modified are designated with a prime superscript. In place of the single table 30 of the transceiver 26 of Figure 1, the transceiver 26' of Figure 3 contains a primary channel control table 41 and a secondary channel control table 43. Similarly, transceiver 34' of Figure 3 contains a primary channel control table 45 and a secondary channel control table 47. It will also be noted that the subscriber side splitter has been eliminated in Figure 3: the reason why this can be done in the present invention

will now be described in detail. It will also be noted that the central office splitter 20 in figure 1 has been retained in the configuration of Figure 3: this is optional, not mandatory. Retaining a splitter at the central office can improve the performance somewhat at little cost, since only a single installation is required and that at the central office itself where technical personnel are commonly available in any event. Where this is not the case, it may be eliminated there also.

Turning now to figure 4, the transceiver or modem 34' is shown in greater detail; the modem 26' is essentially the same for present purposes and will not be separately described. As indicated, modem 34' comprises a transmitter module 50; a receiver module 52; a control module 54; a primary channel control table 45; and a secondary channel control table 47. The primary channel control table is shown more fully in figure 5A.; the secondary channel control table is shown more fully in figure 5B.

In figure 5A, the primary channel control table 45 has a transmitter section 45a which stores a primary set of channel control parameters for use in transmitting to a remote receiver over a DSL line; and a receiver section 45b which stores a primary set of channel control parameters for use in receiving communications over a DSL line from a remote transmitter. The subchannels to which the parameters apply are shown in column 45 c. The channel control parameters in the transmitter section 45a include at least a specification of the bit allocations ("B") 45d and preferably also the gains ("G") 45e to be used on the respective subchannels during transmission. The receiver section similarly includes specification of the bit allocations and gains, and preferably also includes specification of the frequency domain equalizer coefficients ("FDQ") 45f, time domain equalizer coefficients ("TDEQ") 45g, and echo canceller coefficients ("FEC") 45h, among others.

Collectively, the parameters: bit allocation, gain, frequency domain coefficient, time domain coefficient, etc. form a parameter set, each of whose members are also sets, e.g. the bit allocation set defining the allocation of bits to each of the subchannels, the gain setting set defining the gains across the subchannels, etc. In accordance with the preferred embodiment of the present invention, the primary channel control table stores a single parameter set which has at least one member, i.e., a bit allocation set, and preferably a gain allocation set as well; this parameter set defines the default communications conditions to which the system will revert in the absence of disturbance events. The sec-

ondary channel control table, however, has at least two, and typically more, parameter sets for controlling transmission and reception over the subscriber lines by the respective modems; these sets define communications under various disturbance events which change the default conditions.

In particular, in Figure 5B, the secondary channel control table 47 comprises a plurality of parameter sets 47a, 47b, 47c, etc., of which only three sets are shown for purposes of illustration. Each parameter set includes a transmit portion 47 d and a receive portion 47e. In each portion, one or more parameters are specified, e.g., bit allocations 47f and gains 47g in the transmit portion 47d, and frequency domain coefficients 47h, time domain coefficients 47i, and echo cancellation coefficients 47j in the receive portion 47e. The actual values of the coefficients are typically complex numbers and thus they are represented simply by letters, e.g., "a", "b", etc. in the channel control tables of Figures 5A and 5B. Parameter sets 47b, 47c, and the remaining parameter sets are similarly constructed. As was the case for the primary channel control table, each parameter (e.g., bit allocation) is itself a set of elements that define communication conditions, at least in part, across the subchannels to which they apply and which they help characterize.

The primary channel control table containing a bit allocation parameter set is generated in the usual manner, i.e., during initialization (typically, a period preceding the transmission of "working data" as opposed to test data), known data is transmitted to, and received from, the remote modem with which the instant modem is in communication under the conditions which are to comprise the default condition for the modem. Typically, this will be with all disturbing devices inactivated, so that the highest data rate can be achieved, but the actual conditions will be selected by the user. The data received at each modem is checked against the data known to have been transmitted and the primary channel control parameters such as bit allocation, subchannel gains, and the like are calculated accordingly. This table is thereafter used as long as the system remains undisturbed by disturbance events which disrupt communications over the line.

The secondary channel control table may be determined during initialization in the same manner as the primary table, but with devices that may cause disturbance events actuated in order to redetermine the channel control parameters required for communications under the new conditions. These devices may be actuated one by one, and a secon-

dary parameter control set determined for each and stored in the secondary channel control table; or they may be actuated in groups of two or more, and parameter sets determined accordingly; or various combinations of single and group actuations may be performed and the corresponding parameter sets determined. Secondary parameter sets may similarly be determined from actual measurements with interfering sources such as xDSL transmissions in a common binder with the modems in question, and the resultant sets stored in the secondary table.

Other methods of determination of the secondary table may be employed. For example, one or more secondary parameter sets may be derived from the primary table. Thus, the bit allocation on each subchannel in the secondary table may be taken as a percentage, fixed or varying across the subchannels, of the bit allocation for each subchannel defined in the primary table. Alternatively, it may be calculated from the same data as that of the primary table, but using a larger margin; by using a percentage, fixed or varying across the subchannels, of the signal-to-noise ratio used in calculating the primary table; by providing for a different bit error rate than provided for in the primary; or by other techniques, including those described earlier. Portions of the primary and secondary may be recalculated or improved upon during the communication session, and stored for subsequent use. The calculation or recalculation may be a one-time event or may occur repeatedly, including periodically, throughout a communication session.

Further, although use of a multiplicity of parameter sets in the secondary channel control table will generally provide the best match to the actual channel conditions and thus more nearly approach optimum communications conditions, a simplified second table containing a single composite parameter set may also be used. Thus Figure 5C shows a number of sets 49a-49d of bit allocations for the subchannels 49e and which may represent a corresponding number of different communication devices or conditions associated with communications over these subchannels. A single composite parameter set 49f may be formed as a function of the parameter sets 49a-49d by, for example, selecting, for each subchannel, the minimum bit allocation among the sets 49a-49d for each of the subchannels 49e. Such a set represents a "worst case" condition for activation of any of the devices associated with the sets 49a-49d. Other worst case parameter sets may be formed, for example, on selected groups of devices, thus providing for the case when several de-

vices or disturbances are operating simultaneously.

In the absence of a disturbance event, the transceivers 26', 34' use the primary channel control tables 41, 45 for communications. Responsive to detection of a disturbance event, however, the transceivers 26', 34' switch to one of the parameter sets of the secondary channel control tables 43, 47 to continue the communications under the conditions specified by the particular parameter table. These conditions may specify a diminished bit rate while maintaining the same bit error rate as is provided with the primary channel control table; or may specify the same bit rate but at a higher bit error rate; or may specify a diminished bit rate at a correspondingly diminished power level or margin; or other conditions as determined by the specific channel control tables. On termination of the disturbance condition which caused the switch, the transceivers 26', 34' return to use of the primary tables 41, 45.

Typically, the primary tables provide communications at or near the capacity of the communications channel over line 14. The secondary tables provide communications over the channel at a diminished rate. Switching between the primary and secondary tables (that is, switching from a primary parameter set to a secondary parameter set) in accordance with the present invention is fast: it can be accomplished in an interval as short as several frames (each frame being approximately 250 microseconds in current ADSL systems), and thus avoids the lengthy delay (e.g., on the order of several seconds) that would otherwise be required for determination, communication over the subscriber line, and switching of newly-determined bit allocation tables. Further, it avoids communication of such tables over the subscriber line at a time when communications have been impaired and error rates are therefore high. Thus, utilization of prestored parameter sets in accordance with the present invention minimizes disruption to the communication process occasioned by disturbance events.

The channel control tables are stored in a storage or memory for rapid access and retrieval. Preferably, the storage is a random access memory ("RAM") incorporated into the modem itself, but also comprise such a memory located in other components accessible to the modem, e.g., in a stand-alone memory; in a computer such as a personal computer ("PC"); in a disk drive; or in other elements. Further, the storage may include portions of other forms of memory, such as read only memory ("ROM").

In addition to accessing the channel control tables 45 and 47, the control module 54 of Figure 4 preferably also controls formulation of the secondary control table when this table is calculated on the basis of the primary channel control table. Further, the module 54 monitors the SNR on the subscriber line 14 and calculates the primary and secondary channel control parameter sets when these sets are based on measurement of actual conditions of the line, as will most commonly be the case. To this end, the control module is advantageously implemented as a special purpose digital computer or "DSP" chip particularized to the functions described herein. It may, of course, alternatively be implemented as a general purpose computer or in other fashion, as will be understood by those skilled in the art.

In accordance with the present invention, disturbance events on the subscriber line are distinguished from transient events such as lightning impulses by mean of their consequences. In particular, a signaling event such as an off-hook signal or an on-hook signal typically causes sufficient disruption as to preclude further communications without re-initialization. The event is accompanied by an error code indication that persists throughout the disruption; a change in the amplitude and phase of the physical signal carrying the data or of a pilot tone; the application of a substantial voltage to the line; and other indicia. We monitor the subscriber line for the occurrence of one of more of these characteristics in order to detect the event.

Figure 6 illustrates one manner of detecting a disturbance event in accordance with the present invention. A detector 70, which is preferably included in control module 54, receives signals from line 14 and monitors (step 72) the error code (e.g., CRC errors or the FEC error count) associated with the signals for occurrence of an error indication. If no error is detected (step 74), the detector remains in monitoring mode without further action. If an error is indicated by the error code, a counter is incremented (step 76) and the count is then compared with a predefined threshold (step 78). If the count does not exceed the threshold (step 78, ">N?"), the system remains in monitoring mode and continues to accumulate any detected errors. If the count exceeds the threshold (step 78, Y), the detector emits a "disturbance event" detection signal (step 80) which causes the transceiver in which the detector 70 is located to initiate the process of switching to the appropriate parameter set in the secondary table. The count is reset (line 81) when this occurs.

Instead of monitoring the error code for characteristic behavior (i.e., repeated error over successive frames), in accordance with the present invention one may monitor the amplitude and phase of the physical signals transmitting the data over the subchannel or of a pilot tone transmitted between modems. On the occurrence of a disturbance event, the amplitude and phase of the physical signal undergo significant change, i.e., the amplitude suddenly decreases and the phase suddenly shifts to a new value; thereafter, they maintain approximately their new values during successive frames. This behavior may be monitored as shown in Figure 7 in which a monitor 100 monitors, for example, the amplitude of a data signal or a pilot tone on line 14 and sets a flip-flop 102 to an "active" state ("Q") on detecting a change in the amplitude of greater than a predefined threshold value. Flip-flop 102 enables (input "E") a counter 104 connected to receive counting pulses from a frame counter 106 whenever a new frame is transmitted or received by the modem. These counting pulses are also applied to a threshold counter 108 which accumulates the counts applied to it until it reaches a defined count and then applies the resultant count to a comparator 110 where it is compared with the count in counter 104. If the contents of the counters 104 and 108 are equal, comparator 110 provides an output ("Y") which causes the transceiver to initiate the process of switching to the appropriate table. This also resets the counters 104, 108 and the flip-flop 102. These are also reset (input "R") if the counts of counters 104 and 108 do not match ("N" output of comparator 110).

A similar procedure may be used to generate the table-switching signal based on monitoring the phase change of data signals or pilot tones as noted above. Further, although the operation of the event detector of figure 8 has been explained largely in terms of hardware, it will be understood that it may also readily be implemented in software, or in a combination of hardware and software, as is true of most of the elements described herein.

Still a further approach to detecting a disturbance event is to monitor the disturbance event directly. For example, in the case of off-hook or on-hook signals, a 48 volt dc step voltage is applied to the subscriber line. This signal is sufficiently distinct from other signals as to be readily detectable directly simply by monitoring the line for a step voltage of this size and thereafter generating a table-switching signal in response to its

detection. Another approach is to monitor the SNR on one or more subchannels by monitoring the "sync" frames. The presence of a disturbance from data sources on adjacent phone lines manifests itself as a change in the subchannel SNR. A direct method of monitoring disturbance events caused by activation or deactivation of communication-disturbing devices is to directly signal between the device and the local modem on occurrence of either of these events. As shown in Figure 3, for example, signaling lines 35, 37 may be extended directly between the local modem 34' and its associated devices 31, 32 to directly signal a change in these devices, such as their activation ("off hook") or deactivation ("on hook").

In addition to changing the control tables in response to a disturbance event, it is desirable to decrease the upstream transmit power level in order to minimize the interference with the voice communications caused by upstream transmissions, as well as to reduce the leakage of these transmissions into the downstream signal ("echo"). These interferences arise from nonlinearities caused by devices such as telephones that are coupled to the line, especially when the telephones are off-hook. The amount of power reduction required to render the interferences acceptable varies from one telephone to the next. In the preferred embodiment of the invention, a probing signal is used to determine the required decrease in upstream transmit power. In particular, after detecting a disturbance event such as activation or deactivation of a telephone or interference from other sources which can disrupt communications, the transmitter portion of the ATU-R (the "upstream transmitter") transmits a test signal over the subscriber line at varying power levels and measures the echo at the receiver portion of the ATU-R (the "downstream receiver"). The resultant measurement is used to determine an upstream transmission power level that minimizes echo at the downstream receiver or that at least renders it acceptable. The new power level, of course, is typically associated with a corresponding new parameter set in the channel control parameters.

In addition to changing the bit allocation and gain parameters in response to a disturbance event, it is generally necessary to change one or both of the subchannel equalizers, (i.e., the time-domain equalizers or the frequency-domain equalizers), as well as the echo canceller. Appropriate sets of these parameters may be formed in advance in the same manner as the bit allocations and channel gains (i.e., in a preliminary training

session, sending test communications over the subscriber line with various devices connected to the line activated, measuring the resultant communication conditions, and determining the various parameters based on the measurements), and stored in the secondary channel control table for recall and use as required. Alternatively, they may be redetermined quickly during a retraining operation following detection of a disturbance event and without excessivley disrupting communications, since these parameters are local to the receiver and thus need not be transmitted to the other modem in the communications pair.

In particular, in accordance with the preferred embodiment of the invention, on detecting a disturbance event, the transceivers enter a "fast retrain" phase, as shown in more detail in Figure 8. A common disturbance event is taking a telephone off hook or replacing it on hook, and this is commonly detected at the ATU-R. The fast retrain process will be illustrated for such an event, although it will be understood that it is not limited to this, and that the retrain may be initiated for any type of disturbance event, and at either end of the communication. Thus, on detecting such an event (Figure 8, event 200), the ATU-R notifies the ATU-C (step 202) to enter the fast retrain mode. The notification is preferably performed by transmitting a specific tone to the ATU-C, but may also comprise a message or other form of communication. On receiving this notification (step 204), the ATU-C awaits notification from the ATU-R of the power levels to be used for subsequent communications. This includes at least the upstream power level, and may include the downstream power level as well, since changing the upstream power level may impact downstream communications to some extent. For purposes of completeness, it will be assumed that both of these power levels are to be changed, although it will be understood that in many cases, only the upstream power level will be changed.

The new power levels to be used are determined by the ATU-R (step 208), which transmits a channel-probing test signal to the upstream transceiver and measures the resultant echo at the downstream receiver; it then sets the upstream power level to minimize the echo into the downstream signal, and may also set the downstream power level to minimize the effects of leakage of the upstream transmission into the downstream transmission at the upstream transmitter. The ATU-R then communicates (steps 210, 212) to the ATU-C the selected upstream and downstream transmission levels, e.g., by transmit-

ting to the upstream transceiver one or more tones modulated by binary PSK (phase shift keying) signals to ensure robust communication of the power levels. The power levels may be specified directly (e.g., as "-30dbm"), or indirectly (e.g., as "level 3" of a predefined group of levels), and the specification may identify the actual value of the power level, or simply the change in power level to be effectuated.

The ATU-R (step 214) and ATU-C (step 216) next commence transmission at the new power levels for purposes of retraining the equalizers and echo cancellers. Preferably, the change to the new power levels is synchronized through use of frame counters which are used in DSL systems to align transmitters and receivers, but the synchronization may be accomplished by other means (e.g., by transmitting a tone or message or by simply sending a flag) or may be left unsynchronized. Based on the training transmission, the ATU-R and ATU-C determine (steps 218, 220) the time and frequency domain equalizer parameters appropriate to the new power levels, as well as the appropriate echo canceller coefficients. The determination may include calculations based on these measurements in order to determine the coefficients, or the measurements may be used to select a particular set or sets of coefficients from one or more precalculated sets stored at the ATU-R and ATU-C, respectively.

For example, as was the case with determination of the power levels responsive to a disturbance event, the SNRs on various subchannels may be used to identify a particular device or devices associated with the event and thus to select an appropriate prestored parameter set stored at the ATU-R and ATU-C, respectively, simply by transmitting to the other modem in the communication pair a message or tone set that specifies the number of the parameter set to be used for subsequent communications. The SNR measurements thus serve as a "signature" of the device or devices associated with the disturbance event, and allow rapid identification of these devices. This approach can significantly reduce the time required to retrain the equalizers and echo cancellers. And even if training is required under particular circumstances, the training time can be meaningfully reduced by using prestored coefficients as the starting point.

To facilitate use of the SNR measurements in retrieving corresponding parameter sets, it is desirable that the various parameter sets as stored be indexed to sets of SNRs, so that one or more parameter sets associated with particular communication conditions

may quickly be identified and retrieved. One way in which this may be accomplished is shown in Fig. 9A in which the respective parameter sets such as a first set 250, a second set 252, etc. have, in addition to the subchannel (SC) number 254 and the corresponding bit allocation (BA) and gain (G) entries, a SNR entry 260 characteristic of the parameter set appropriate to a given communication condition, such as "on-hook" (table 250), "off-hook" (table 252), etc. Additional parameter sets such as frequency domain equalizer coefficients, time domain equalizer coefficients, and echo cancellation coefficients may also be stored in the tables, as would be appropriate for the receiver portion of the modem; for the transmitter portion, these coefficients are not applicable and thus are not stored.

An alternative means of linking the subchannel SNRs and the corresponding parameter sets is shown in Figure 9B. As there shown, a simple list structure 270 comprises a parameter set identifier 272, and a multiplicity of SNR measures 274, 276, etc. SNRs for some or all of the subchannels may be included. The list may be searched measure for measure to identify the nearest match to a stored parameter set, and that set then retrieved for subsequent use. In either Figure 9A or 9B the parameter set indexed to the SNRs may be a set of multiple parameters, such as bit allocations and gains, among others, of may comprise a single set such bit allocations only, or gains, only, etc.

The identification of the channel control parameter sets to be used for the subsequent communications is exchanged between the transceivers (steps 226-232) which then switch to these parameter sets (234, 236) and commence communications under the new conditions. The message containing the channel control parameters is preferably modulated in a similar manner as the "power level" message, i.e., using several modulating tones with BPSK signaling. The message is therefore short and very robust. It is important that it be short so that the fast retrain time is minimized, since the modem is not transmitting or receiving data during this time and its temporary unavailability may thus be very noticeable, as would be the case, for example, when the modem is being used for video transmission, or internet access, etc. Similarly, it is important that the message transmission be robust , since error-free communication during a disturbance event is very difficult, due to decreased SNR, impulse noise from ringing or dialing, or the like. Thus, the provision and utilization of pre-stored parameter sets significantly enhances the reli-

ability of communications despite the absence of a splitter at at least one of the modems and despite the presence of disturbance events concurrent with data communications.

It is expected that the modems described herein will most commonly be used in dedicated pairs, i.e., each subscriber (ATU-R) modem will communicate with a dedicated central office (ATU-C) modem. However, in certain cases it may suffice to provide a single master central office modem to service two or more subscriber modems. The present invention accommodates that eventuality as well. Thus, in Figure 10, a central office modem 280 communicates through a switch 282 with a plurality of subscriber modems 284, 286, 288 over subscriber lines 290, 292, 294. The modems may be located at differing distances from the central office and in different communication environments, and thus the channel control tables of each may be unique among themselves. Accordingly, the central office modem stores a master set 296 of individual channel control parameter sets 298, 300, 302, etc., one set (both transmit and receive) for each subscriber modem. On initiating communications to a particular subscriber, the central office modem retrieves the appropriate transmission parameter set for the subscriber and uses it in the subsequent communications. Similarly, on initiating communications to the central office, a given subscriber modem identifies itself to enable the central office modem to retrieve the appropriate reception parameter set for that subscriber.

CONCLUSION

From the foregoing it will be seen that we have provided an improved communications system for communication over subchannels of limited bandwidth such as ordinary residential telephone lines. The system accommodates both voice and data communications over the lines simultaneously, and eliminates the need for the installation and use of "splitters", an expense that might otherwise inhibit the adoption and use of the high communication capacity offered by DSL systems. Thus, it may be implemented and used as widely as conventional modems are today, but offers significantly greater bandwidth than is currently attainable with such modems.

CLAIMS

1. Apparatus for use in connection with a wireline data communication system carrying data in a multiplicity of different frequency bands which may be present concurrently on the line, comprising

A. means for detecting a signaling event associated with at least a first of said bands;

B. means responsive to said detecting means for modifying the processing of signals transmitted over at least a second of said bands.

2. Apparatus for use in connection with a wireline data communication system carrying data in a multiplicity of different frequency bands which may be present concurrently on the line and including means responsive to a signal resulting from a disturbance event to modify the transmission of data over said line.

3. Apparatus according to claim 2 in which said signal is a collection of PSK modulated tones.

4. Apparatus according to claim 2 in which said disturbance event is an on-hook to off-hook transition.

5. Apparatus according to claim 2 in which said disturbance event is off-hook to on-hook transition

6. Apparatus according to claim 2 in which said disturbance event is caused by a change in the crosstalk environment.

7. Apparatus according to claim 2 in which said modification of transmission includes sending a sequence of reference frames.

8. Apparatus according to claim 2 in which said modification of transmissionincludes entering a fast retrain mode.

9. Apparatus according to claim 1 in which said detecting means comprises

(1) means for measuring, at a multiplicity of different times, a characteristic of a signal transmitted over said wireline

(2) means for activating said modifying means when samples of the measured characteristics differ in a defined manner at selected different times.

10. Apparatus according to claim 9 in which said measuring means measures the extent of errors in error-correcting code associated with the signals whose processing is to be modified and activates said modifying means only when the extent of said errors exceeds a defined threshold for at least a defined number of times.

11. Apparatus according to claim 10 in which said measuring means activates said modifying means only when the number of errors in each said sample exceeds a defined number in each of two or more samples.

12. Apparatus according to claim 9 in which said measuring means measures a characteristic of signals transmitted over a plurality of different frequency bands and activates said modifying means only when the measured characteristic exceeds defined thresholds associated with each of said plurality of frequency bands.

13. Apparatus according to claim 1 in which said wireline data communication system comprises a telephone subscriber loop carrying both voice and data signals, and in which said signaling event comprises an off-hook event.

14. Apparatus according to claim 1 in which said wireline data communication system comprises a telephone subscriber loop carrying both voice and data signals, and in which said signaling event comprises an on-hook event.

15. Apparatus according to claim 14 which includes a frequency domain equalizer for equalizing the frequency characteristics of each of said frequency bands in accordance with reference signals transmitted over said bands and in which said modifying means comprises means for changing the characteristics of said equalizers in accordance with

measurements on said reference signals.

16. Apparatus according to claim 9 in which said measuring means measures the signal-to-noise ratio of said reference signals and activates said modifying means only when said ratio is less than a defined threshold for at least a defined number of times

17. Apparatus according to claim 9 in which said data communication system includes means for transmitting a pilot tone and in which said apparatus includes means for measuring at least one characteristic of said tone at different times and means for activating said modifying means only when said characteristics manifest changes exceeding a defined threshold for at least a defined number of times.

18. Apparatus according to claim 9 which includes means for transmitting over said wireline information back to a source of said information signals, said means transmitting at a first power level in the absence of detection of a signaling event, and transmitting at a different power level responsive to detection of a signaling event.

19. Apparatus according to claim 9 which includes a first set of stored parameters for use in processing said information when said system is in a first state.

20. Apparatus according to claim 19 which further includes a second set of stored parameters for processing said information when said system switches to a second state responsive to detecting a signaling event.

21. Apparatus according to claim 20 in which said second set is precomputed.

22. Apparatus according to claim 21 in which said second set is computed responsive to reference signals received on said subchannel subsequent to detection of a signaling event.

23. Apparatus according to claim 21 in which said first and second sets are computed on initiating a communications session.

24. Apparatus according to claim 1 including means for varying the data rate at which said modifying meansprocesses said signals.

25. In a modem communicating data over a multiplicity of discrete sub-subchannels, each

characterized by a bit allocation parameter defining the allocation of bits to the corresponding subchannel for communication over said subchannel, the improvement comprising:

A. means for storing a first channel control table for allocating bits to said subchannel during a first communication condition;

B. means defining a second channel control table for allocating bits to said table during a second communication condition;

26. A modem according to claim 25 which includes a

means for switching between said tables on the detection of a defined event.

27. A modem according to claim 25 in which said first table establishes the communications capabilities of said modem during normal operation.

28. A modem according to claim 27 in which said second table establishes the communications capabilities of said modem during diminished operation.

29. A modem according to claim 25 in which said defined event includes signaling events comprising transitions between on-hook and off-hook conditions.

30. A modem according to claim 29 in which said first table defines communications in the absence of a signaling event.

31. A modem according to claim 30 in which said second table defines communications responsive to detection of a signaling event.

32. A modem according to claim 31 in which said switching means switches from said second table to said first table on detection of a signaling event indicative of cessation of a previously-detected signaling event.

33. A modem according to claim 25 in which said first and second tables are determined during an initialization session in which the communication capabilities of said sub-subchannels are determined.

34. A modem according to claim 33 in which said first table is determined in the absence of interfering signaling conditions.

35. A modem according to claim 34 in which said second table is determined as a function of said first table.

36. A modem according to claim 35 in which the bit allocations of said second table are determined as a percentage of the bit allocations of said first table.

37. A modem according to claim 27 in which the bit allocations of second table are determined by adding noise margins to the determination of the bit allocations of the corresponding sub-subchannels of said first table.

38. A modem according to claim 25 in which said second channel control table is determined responsive to a plurality of signaling events created by a corresponding plurality of event-generating sources, each defining a channel control table specific to the given source, and comprises a composite table formed by selecting, for each sub-subchannel, the minimum bit allocation for the corresponding sub-subchannel of the table associated with each of the plurality of sources.

39. A modem according to claim 25 in which said second channel control table is selected from a plurality of tables determined responsive to a plurality of signaling events created by a corresponding plurality of event-generating sources, each defining a channel control table specific to the given source.

40. A modem according to claim 39 which includes means for selecting one of said plurality of tables for use as said second table in accordance with the source generating an event.

41. A modem according to claim 25 which further includes:

C. means for redetermining said channel control tables while said modem is in either of said communication conditions; and

D. means for communicating a redetermined table to a second modem en-

gaged in communication with said modem.

42. A modem according to claim 41 in which said communicating means communicates said redetermined table over a dedicated sub-subchannel selected from among said discrete sub-subchannels.

43. A modem according to claim 41 in which said communicating means further communicates to said second modem information identifying the type of said redetermined table.

44. A modem for use in asymmetric digital subscriber loop communications having both upstream and downstream communication subchannels formed from a plurality of sub-subchannels, said loop adapted to carry both voice and data communications thereon, comprising:

A. means for storing a first table defining data communications between said modem and a second modem connected to said loop during a first communication state;

B. means for storing a second table defining data communications between said modem and said second modem during a second communication state.

45. A modem according to claim 44 that includesmeans for switching between said tables responsive to the occurrence of selected events.

46. A modem for use in asymmetric digital subscriber loop communications having both upstream and downstream communication subchannels formed from a plurality of sub-subchannels, said loop adapted to carry both voice and data communications thereon, comprising:

A. means for storing a first table defining data communications between said modem and a second modem connected to said loop during a first communication state;

B. means for storing a second table defining data communications between said modem and said second modem during a second communication state; and

C. means for selecting between said tables based on signals received from

said second modem.

47. A modem according to claim 44 which includes:

D. means for detecting said selected events, said means including

(1) means for monitoring a selected characteristic of at least one of said communication subchannels during a plurality of communication intervals;

(2) means for determining differences in the selected characteristic over said plurality of intervals;

(3) means for generating a signal initiating switching of said tables when said differences exhibit a defined pattern.

48. A modem according to claim 47 in which said pattern comprises an initial difference above a first threshold amount followed by at least a subsequent differences less than a second threshold amount.

49. A modem according to claim 48 in which said first threshold is greater than said second threshold.

50. A modem according to claim 49 in which said pattern comprises an initial difference above a first threshold amount followed by a plurality of subsequent differences less than a second threshold amount.

51. A modem according to claim 48 in which said selected characteristic is monitored over at least one sub-subchannel.

52. A modem according to claim 48 in which said selected characteristic is monitored over a plurality of sub-subchannels.

53. A modem according to claim 52 which includes means for averaging the monitored values of said selected characteristic over said sub-subchannels for use in comparing said initial difference to said first threshold.

54. A modem according to claim 52 which includes means for averaging the monitored

values of said selected characteristic over said sub-subchannels for use in comparing said subsequent difference to said second threshold.

55. A modem according to claim 49 in which said characteristic comprises an error code error.

56. A modem according to claim 49 in which said characteristic comprises a signal-to-noise ratio.

57. A modem according to claim in which said characteristic comprises a parameter of a pilot tone.

58. A modem according to claim 44 in which said first table establishes a data rate greater than that of said second table.

59. A modem according to claim 58 in which said tables define the number of bits transmitted over the respective sub-subchannels.

60. A modem according to claim 59 in which said events comprise signaling events selected from the group comprising off-hook, on-hook, ringing, and busy.

61. A modem according to claim 47 in which said switching means returns said modem to said first communication state on termination of the event causing the switching.

62. A modem according to claim 44 which includes:

D. means for emitting into said loop a test signal for probing the return characteristics of transmissions into the loop by said modem; and

E. means for limiting the power level of said transmissions in accordance with the measured return characteristics.

63. A modem according to claim 62 in which said probe comprises a tone at a defined amplitude and frequency and in which the measured return characteristics comprise at least one characteristic selected from the group comprising the amplitude and frequency of the signal returned to said modem in response to emission of said tone.

64. A modem according to claim 62 in which said probe comprises a plurality of tones at defined amplitudes and frequencies and in which the measured return characteristics comprise at least one characteristic selected from the group comprising the amplitudes and frequencies of the signal returned to said modem in response to emission of said tone.

65. A modem according to claim 44 which includes equalizers for equalizing the transmission characteristics of said subchannels and in which said tables define:;

(1) coefficients of time domain equalizers or

(2) coefficients of frequency domain equalizers or

(3) coefficients of digital echo cancellers

66. A modem according to claim 44 in which said first table is determined during an initialization process in the absence of a selected event.

67. A modem according to claim 66 in which said second table is determined during an initialization process in the presence of a selected event.

68. A modem according to claim 67 in which said second table is redetermined responsive to occurrence of a selected event.

69. A modem according to claim 68 in which redetermined tables are communicated from a given modem to other modems with which it is in communication during a quiescent state.

70. A modem according to claim 47 in which said generating means causes transmission of a switch-control signal over one of said sub-subchannels in response to detection of a selected event.

71. A modem according to claim 47 in which said generating means causes transmission of a tone in response to detection of a selected event.

72. Apparatus for use in communicating digital data over a digital subscriber line concurrent with voice communications over said line, comprising:

A. a transceiver for communicating digital data to and from said line;

B. a first storage element for storing a first set of communication parameters for use in communicating data under a first communication condition; and

C. a second storage element for storing a second set of communication parameters for use in communicating data under a second communication condition.

73. Apparatus according to claim 72 including a means for monitoring communication conditions on said line and for switching between said first and second sets of communication parameters responsive to changes between said communication conditions.

74. Apparatus according to claim 72 including means responsive to signals communicated to it to switch between said sets of communicaton parameters.

75. Apparatus according to claim 72 which communicates said data over a plurality of subchannels of different frequency and at least potentially different information-carrying capacity and in which said communication parameters comprise at least a channel control table defining the number of bits to be allocated to the subchannels for communications under the respective conditions.

76. Apparatus according to claim 72 which communicates said data over a plurality of subchannels of different frequency and at least potentially different information-carrying capacity and in which said communication parameters comprise subchannel gain tables defining the gain characteristics of the subchannels for communications under the respective conditions.

77. Apparatus according to claim 72 which communicates said data over a plurality of subchannels of different frequency and at least potentially different information-carrying capacity and in which said communication parameters comprise frequency domain equalizers defining the frequency characteristics of the subchannels for communications under the respective conditions.

78. Apparatus according to claim 72 in which both sets of communication parameters are determined during an initialization interval preceding communication of working data.

79. Apparatus according to claim 72 in which said first set of communication parameters is determined during an initialization interval preceding communication of working data and said second set of parameters is determined during a subsequent interval following communication of working data and characterized by said second communications conditions.

80. Apparatus according to claim 79 in which said second set of communication parameters is determined at a first transceiver of a transceiver pair in communication with each other and is communicated to a second transceiver in said pair during a time when said transceivers are operating with an earlier set of set of secondary parameters.

81. Apparatus according to claim 80 in which said transceivers revert to said first set of communications parameters responsive to return of communications to a first communications condition.

82. Apparatus according to claim 72 which includes means for signaling between said transceivers a desired change in communications parameters.

83. Apparatus according to claim 82 in which said signaling means comprises means for transmitting messages over one or more subchannels.

84. Apparatus according to claim 82 in which said signaling means comprises means for transmitting messages over one or more subchannels intermediate subchannels used for upstream and downstream communications.

85. Apparatus according to claim 83 in which said messages comprise tones.

86. Apparatus according to claim 72 in which said transceiver transmits and receives data over a defined number of subchannels and which includes means for identifying the subchannels over which said transceivers will communicate with each other.

87. Apparatus according to claim 86 in which said identifying means includes means for nulling at least those portions of the stored sets of communications parameters that define the bit capacity of the subchanels that are being excluded from communications.

88. Apparatus according to claim 72 in which said second set of parameters includes communication parameters corresponding to a plurality of devices connected for voice communications over said line.

89. Apparatus according to claim 80 in which said second set of parameters includes a plurality of subsets of communications parameters characteristic of a corresponding plurality of voice communication devices for defining communications when a selected device is active.

90. Apparatus according to claim 89 including means for identifying which of said plurality of devices is active and for selecting the corresponding communications parameter set for such device.

91. Apparatus according to claim 90 in which said identifying means includes signaling means interconnecting said voice communication devices to said transceiver.

92. In a communication system using discrete multitone modulation, the improvement comprising storing a first channel control table for use in defining communications under a first communication state and storing at least a second channel control table for communication under a second communication state.

93. A modem for use in symmetric or asymmetric digital subscriber loop communications having both upstream and downstream communication subchannels formed from a plurality of sub-subchannels, comprising:

A. means for storing a first table defining data communications between said modem and a second modem connected to said loop during a first communication state;

B. means for storing a second table defining data communications between said modem and said second modem during a second communication state:

94. A modem according to claim 93 that includes means for switching between said tables responsive to the occurrence of selected events.

95. A modem according to claim 94 in which said selected event includes a transition

from on-hook to off-hook.

96. A modem according to claim 94 in which said selected event includes a transition from off-hook to on-hook.

97. A modem according to claim 94 in which said selected event includes a change in the crosstalk environment.

98. A modem according to claim 93 that includes means for switching between said tables based upon reception of a signal from a remote modem.

99. A modem according to claim 98 in which said signal includes a message.

100. A modem according to claim 98 in which said signal includes a tone or set of tones.

101. A modem according to claim 98 in which said signal includes a flag.

102. A modem according to claim 93 that includes means for switching between said tables at a time that depends upon a frame counter.

103. A modem according to claim 93 that includes means for switching between said tables at a time that depends upon a flag.

104. A multicarrier modem for use in symmetric or asymmetric digital subscriber loop communications having both upstream and downstream communication subchannels formed from a plurality of subchannels that includes a means to select the number of said subchannels that are to be used for communications based upon a signal from a remote modem.

105. A modem according to claim 104 in which said signal is received prior to initialization of modem.

106. A modem according to claim 104 in which said signal is a message dictating how many subchannels are to be used.

107. A modem according to claim 104 in which said signal is a message selecting one of a collection of candidate subchannel selections.

108. A modem according to claim 104 in which said signal is a tone or collection of tones selecting one of a collection of candidate subchannel selections.

109. A multicarrier modem for use in symmetric or asymmetric digital subscriber loop communications having both upstream and downstream communication subchannels formed from a plurality of subchannels that includes a means to signal to a remote modem the number of said subchannels that are to be used for communications.

110. A modem according to claim 109 in which said signal is transmitted prior to initialization of modem.

111. A modem according to claim 109 in which said signal is a message dictating how many subchannels are to be used.

112. A modem according to claim 109 in which said signal is a message selecting one of a collection of candidate subchannel selections.

113. A modem according to claim 109 in which said signal is a tone or collection of tones selecting one of a collection of candidate subchannel selections.

114. A multicarrier modem for use in symmetric or asymmetric digital subscriber loop communications having both upstream and downstream communication subchannels formed from a plurality of subchannels, comprising of a means to limit the number of transmission subchannels in order to communicate with a remote modem that is only capable of receiving the limited frequency band.

115. A multicarrier modem for use in symmetric or asymmetric digital subscriber loop communications having both upstream and downstream communication subchannels formed from a plurality of subchannels, comprising of a means to limit the number of receiver subchannels in order to communicate with a remote modem that is only capable of transmitting the limited frequency band.

116. A multicarrier modem that for use in symmetric or asymmetric digital subscriber loop communications having both upstream and downstream communication subchannels

formed from a plurality of subchannels, comprising of a means to determine the location of a telephone that would benefit from the use of a low pass filter.

117. A multicarrier modem according to claim 116 in which said determination means includes monitoring the signal to noise ratio when said telephone goes off-hook.

118. A multicarrier modem according to claim 116 in which said determination means includes monitoring the echo response of the transmitted signal when said telephone goes off-hook.

119. In a modem communicating data over a wireline via a multiplicity of discrete sub-channels in accordance with a bit-loading specification defining the allocation of bits to the corresponding subchannel for communication thereon, the improvement comprising:

A irst means for storing a primary bit allocation table for allocating said bits during a first communication condition; and

B. second means for storing a secondary bit allocation table for allocating said bits during a second communication condition.

120. A modem according to claim 119 which includes means for switching between bit allocation sets defined by said tables.

121. A modem according to claim 120 in which said switching means is actuated responsive to at least one of the events comprising receipt of a message, a tone, or a flag from a remote modem.

122. A modem according to claim 121 in which switching means includes the use of a frame counter to designate when said switch is to occur.

123. A modem according to claim 119 in which said primary bit allocation table defines communications in the absence of a disturbance event, and in which said secondary bit allocation table defines communications in response to said disturbance event.

124. A modem according to claim 123 in which said secondary bit allocation table defines communications over said subchannels for times when said subchannels are affected by

voice communication activities.

125. A modem according to claim 124 in which said secondary bit allocation table defines communications over said subchannels for times when said subchannels are affected by voice communication devices that have entered the off-hook state.

126. A modem according to claim 124 in which said primary bit allocation table defines communications over said subchannels for times when said subchannels are affected by voice communication devices that have returned from an off-hook state.

127. A modem according to claim 119 in which said primary table is determined in a preliminary training session in which potentially interfering voice communication devices connected to the line are inactive.

128. A modem according to claim 119 in which said primary table is determined in the absence of disturbance events.

129. A modem according to claim 119 in which said primary bit allocation table is determined in advance of installation of said modem.

130. A modem according to claim 119 in which said secondary table is determined in an initial training session based on measurements of communications over said wireline.

131. A modem according to claim 119 in which said secondary table is determined in initial training sessions based on measurements of communications over said wireline with potentially interfering voice communication devices connected to the line selectively activated to thereby form a secondary table comprising a plurality of bit allocation sets corresponding to the plurality of activated devices.

132. A modem according to claim 131 in which said devices are activated one by one so that each bit allocation set corresponds to a single device.

133. A modem according to claim 131 in which said devices are activated in groups of two or more so that each bit allocation set corresponds to one of said groups.

134. A modem according to claim 119 in which said secondary bit allocation table is de-

termined from said primary bit allocation table.

135. A modem according to claim 119 in which the bit allocations of said secondary table are determined as a percentage of the bit allocations of said primary table.

136. A modem according to claim 119 in which the bit allocations of said secondary table are determined based on a percentage of the signal to noise ratios on which the bit allocations of said primary table are determined.

137. A modem according to claim 119 in which the bit allocations of said secondary table are determined based on information defining said primary table but using a different bit error rate

138. A modem according to claim 119 in which said secondary bit allocation table is formed as a composite of the bit loading sets of a multiplicity of voice communication devices and/or disturbances.

139 A modem according to claim 119 in which the bit allocation value for each subchannel in said composite is the worst-case value for the corresponding subchannel in the bit allocation sets defining said devices and/or disturbances.

140. A modem according to claim 119 in which said secondary bit allocation table is determined by adding a power margin to the calculations for the respective entries of the primary table.

141. A modem according to claim 119 in which said secondary table comprises a set of bit allocation tables defining the bit allocations for a corresponding set of devices that may be connected to said wireline.

142. A modem according to claim 119 in which said secondary table comprises a set of bit allocation tables defining the bit allocations for a corresponding set of disturbances on said wireline.

143. A modem according to claim 119 in which said secondary table comprises a set of bit allocation tables defining the bit allocations for a corresponding set of devices and

disturbances on said wireline.

144. A modem according to claim 119 in which a plurality of secondary bit allocation tables are determined by adding a corresponding plurality of power margins to the calculations for the respective entries of the primary table, each secondary table so determined corresponding to a different communications state.

145. A modem according to claim 119 in which said power margin is substantially uniform across the entries of a table.

146. A modem according to claim 119 in which said power margin varies across the entries of a table.

147. A modem according to claim 119 configured to switch to a secondary state corresponding to use of said secondary bit allocation table for communications responsive to occurrence of a disturbance event.

148. A modem according to claim 147 configured to switch to a primary state corresponding to use of said primary bit allocation table for communications responsive to cessation of a disturbance event.

149. A modem according to claim 147 configured to switch to a different secondary state corresponding to use of a different set of bit allocations in said secondary bit allocation table for communications responsive to occurrence of a further disturbance event, different from a disturbance event preceding it, while said modem is in said secondary state.

150. A modem according to claim 119 in which said switching means includes means responsive to a disturbance event to thereby initiate a switch between said tables.

151. A modem according to claim 150 which includes a signaling line connecting a device to said modem for signaling to said modem the occurrence of a disturbance event.

152. A modem according to claim 150 which includes means for detecting a disturbance event on said line.

153. A modem according to claim 152 in which said detecting means includes means for

monitoring the signal to noise ratios on one or more subchannels of said line and means responsive to said ratios for selecting a bit allocation set for use in communications.

154. A modem according to claim 152 in which said detecting means includes means for monitoring a parameter of a tone or collection of tones and means responsive to said parameter for selecting a bit allocation set for use in communications.

155. A modem according to claim 152 in which said parameter includes the amplitude and/or phase of said tone or tones.

156. In a modem communicating data over a wireline via a multiplicity of discrete subchannels in accordance with a gain specification defining the allocation of gains to the corresponding subchannel for communication thereon, the improvement comprising:

A. first means for storing a primary gain set for allocating said gains during a first communication condition; and

B. second means for storing a secondary gain set for allocating said gains during a second communication condition.

157. A modem according to claim 156 which includes means for switching between said gain sets.

158. A modem according to claim 157 in which said switching means is actuated responsive to at least one of the events comprising receipt of a message, a tone, or a flag from a remote modem.

159. A modem according to claim 157 in which said switching means is actuated responsive to its detection of a disturbance event.

160. A discrete multitone modem including a transmitter for communicating to a remote receiver at one of a plurality of power levels associated with particular communication conditions on a digital subscriber line, comprising

A. means for monitoring at least one parameter indicative of communication conditions on said line;

B. means dependent on said parameter for selecting the power level at which said modem either transmits, or receives, data or both.

161. A discrete multitone modem including a transmitter for communicating to a remote receiver at one of a plurality of power levels associated with particular communication conditions on a digital subscriber line and adapted to receive a power select signal indicating a power level to be used for subsequent transmissions.

162. A discrete multitone modem according to claim 160 which includes means for communicating to another modem with which it communicates a power select signal indicating a power level to be used for subsequent transmissions.

163 A discrete multitone modem according to claim 160 which includes means for receiving from another modem with which it communicates a power select signal indicating a power level to be used for subsequent transmissions.

164 A discrete multitone modem according to claim 160 in which said power select signal identifies a specific power level at which said other modem is to receive data from it.

165. A discrete multitone modem according to claim 162 in which said power select signal identifies a specific power level at which said other modem is to transmit data to it.

166. A discrete multitone modem according to either of claims 164 or 165in which said discrete power level comprises one of several predefined power levels for communication between said modems.

167. A discrete multitone modem according to claim 162 in which the means for communicating said power select signal includes means for transmitting said signal over at least one subchannel intermediate an upstream and a downstream set of data subchannels over which said modem communicates.

168. A discrete multitone modem according to claim 167 which the means for communicating said power select signal includes means for transmitting said signal over one or more data subchannels over which said modem communicates.

169. A discrete multitone modem according to claim 160 which includes a plurality of parameter sets stored in said modem and defining communications under a plurality of different communication conditions on said line.

170. A discrete multitone modem according to claim 169 in which said parameter sets include at least a primary set of parameters for controlling communications in the absence of a disturbance event, and a secondary set for controlling communications responsive to a disturbance event.

171. A discrete multitone modem according to claim 169 in which said monitoring means monitors the signal to noise ratio on one or more subchannels over which said modem communicates and selects a parameter set based on said ratio for controlling subsequent communications.

172. A discrete multitone modem according to claim 169 in which said parameter sets include a set of parameters defining the power level at which said modem transmits to other modems.

173. A discrete multitone modem according to 169 in which said parameter sets include a set of parameters defining the power level at which said modem receives communications from other modems.

174. A discrete multitone modem according to claim 173 in which said modem includes means for transmitting to another modem with which it is in communication a signal indicating a parameter set to be used in subsequent communications between said modems.

175. A discrete multitone modem according to claim 172 in which said modem includes means for receiving from another modem with which it is in communication a signal indicating a parameter set to be used in subsequent communications between said modems.

176. A discrete multitone modem according to claim 160 in which said modem communicates to another modem a desired power level by itself changing the power level at which it communicates with said other modem.

177. A discrete multitone modem including a transmitter for communicating to a remote receiver at one of a plurality of power levels associated with particular communication conditions on a digital subscriber line and storing a plurality of sets of channel control parameters corresponding to said power levels, comprising

A. means responsive to a disturbance event to select a power level at which said transmitter transmits to said receiver; and

B. means for communicating the selected power level to said receiver.

178. A discrete multitone modem including a transmitter for communicating to a remote receiver at one of a plurality of power levels associated with particular communication conditions on a digital subscriber line and storing a plurality of sets of channel control parameters corresponding to said power levels and adapted to receive a power select signal indicating a power level to be used for subsequent transmissions.

179. A discrete multitone modem according to claim 177 in which the means for communicating the change in power level transmits a power power select signal to the remote receiver indicative of the change in power level.

180. A discrete multitone modem according to claim 179 in which the transmitting means transmits a tone indicating the desired change in power level to the remote receiver.

181. A discrete multitone modem according to claim 179 in which the transmitting means transmits a plurality of tones indicating the desired change in power level to the remote receiver.

182. A discrete multitone modem according to claim 181 in which the plurality of tones designates a particular one of several power levels to which the remote receiver is to switch.

183. A discrete multitone modem according to claim 179 in which the means for communicating the change in power level designates a particular one of several power levels to which the remote receiver is to switch.

184. A discrete multitone modem according to claim 179 in which the means for communicating the change in power level to the remote receiver includes means for transmitting a power power select signal over at least one subchannel intermediate an upstream and a downstream set of data subchannels over which said modem communicates.

185. A discrete multitone modem according to claim 177 in which the means for communicating the change in power level to the remote receiver comprises

(1) means associated with the transmitter for effectuating the change in power level at said transmitter;

(2) means in the remote receiver responsive to the change in power level at the transmitter for changing the power level of its reception in accordance therewith.

186. A discrete multitone modem according to claim 177 in which the means for communicating the change in power level to the remote receiver transmits to the remote receiver a frame count at which the remote receiver is to effectuate the change in power level.

187. A discrete multitone modem according to claim 178 in which the means for receiving the power select signal inlcudes a frame count at which said modem is to effectuate the change in power level.

188. A discrete multitone modem according to claim 177 including a receiver responsive to communication of a power level change from a remote transmitter to thereby:

(1) measure at least one parameter indicative of communication conditions on said line responsive to said power level change, and

(2) select new channel control parameters from a plurality of sets of prestored channel control parameters based on said measurement.

189. A discrete multitone modem according to claim 188 which said at least one parameter comprises a signal to noise ratio of communications over said line.

190. A discrete multitone modem according to claim 188 which said at least one parameter comprises a characteristic of a monitor tone transmited over said line.

191. A discrete multitone modem according to claim 188 which said characteristic comprises at least the amplitude of said tone.

192. A discrete multitone modem according to claim 188 which said characteristic comprises at least the phase of said tone.

193. A discrete multitone modem according to claim 188 which said characteristic comprises at least the frequency of said tone.

194. A discrete multitone modem according to claim 189 in which said tone is transmitted over over at least one subchannel intermediate an upstream and a downstream set of data subchannels over which said modem communicates.

195. A discrete multitone modem according to claim 189 in which said signal to noise ratio is based on measurements of reference frames transmitted over said line.

196. A discrete multitone modem according to claim 26 in which said signal to noise ratio is based on measurements of data transmitted over said line.

197. A discrete multitone modem according to claim 177 in which the means responsive to a disturbance event comprises means for measuring at least one characteristic of said line indicative of communications on said line and for selecting a power level responsive to said measurement.

198. A discrete multitone modem according to claim 197 in which said characteristic comprises CRC errors and in which said measuring means signals a change in power level when said CRC errors exceed a defined threshold on a selected plurality of successive measurements thereof.

199. A discrete multitone modem according to claim 197 in which said characteristic comprises forward error correction coefficients and in which said measuring means signals a change in power level when the number of errors exceeds a defined threshold.

200. A discrete multitone modem according to claim 199 in which said measuring means signals a change in power level when the number of uncorrected errors exceeds a defined threshold.

201. A discrete multitone modem according to claim 199 in which the means for communicating the change in power level designates a single alternative power level to which the remote receiver is to switch.

202. A discrete multitone modem according to claim 177 which includes means in said modem for at least one parameter indicative of communication

203. A method of transmitting data over a wire line through upstream and downstream channels, respectively, from first and second pluralities of discrete-frequency subchannels, comprising the steps of:

A. storing at least first and second parameter sets defining data communications over said channels under at least two different communication conditions;

B. selecting a parameter set for use in communications in accordance with the prevailing communication condition.

204. The method of claim 203 in which said selecting step includes the step of monitoring communications on said line and transmitting and selecting said parameter set in accordance with said monitoring.

205. The method of claim 204 in which said monitoring step includes the step of measuring at least one communication indicium on said at least one subchannel.

206. The method of claim 205 in which said at least one indicium is selected from the group comprising signal to noise ratios, error rates, and the amplitude and frequency of tones.

207. The method of claims 203 or 206 which includes the step of transmitting over said line a signal that identifies the parameter set to be selected.

208. The method of claims 203 or 206 which includes the step of receiving over said line a signal that identifies the parameter set to be selected.

209. The method of claim 207 in which said signal is transmitted on a subchannel intermediate said upstream and downstream channels.

210. The method of claim 208 in which said signal is received on a subchannel intermediate said upstream and downstream channels.

211. The method of claims 203, 206 or 207 in which said first parameter set defines communications over said line in the absence of a disturbance event and said second parameter set defines communications over said line in the presence of a disturbance event.

212. The method of claims 203 or 211 in which said parameter sets include at least one parameter set from the group comprising subchannel bit allocations subcahnel gains.

213. The method of claims 203 or 211 in which said parameter sets include at least one parameter set from the group comprising subchannel frequency domain coefficients, time domain coefficients, and echo cancellation coefficients.

214. The method of claims 212 or 213 in which said parameter sets include a first section for use in transmitting data over said line and a second portion for receiving data over said line.

215. A method of transmitting data over a wire line through upstream and downstream channels, respectively, from first and second pluralities of discrete-frequency subchannels, comprising the steps of:

A. signaling over said line to a remote receiver the intention to transmit data over said line at a selected one of a plurality of predefined power levels;

B. transmitting data over said line at said selected power level

216. The method of claims 214 or 219 which includes the step of monitoring communications conditions on said line and selecting said power level in accordance therewith.

217. The method of claims 215 or 219 in which the step of selecting said power level includes the step of selecting a first power level in response to detecting the absence of a disturbance event and selecting a second power level in response to detecting the presence of a disturbance event.

218. The method f claim 217 in which said second power level is selected from a group of at least two power levels.

219. A method of transmitting data over a wire line through upstream and downstream channels, respectively, from first and second pluralities of discrete-frequency subchannels, comprising the steps of:

A. signaling to a remote receiver at one of a plurality of power levels;

B. receiving a signal from a receiver that determines said power levels.

220. The method of claim 219 in which said power levels are selected from a plurality of predetermined power levels having corresponding pre-stored parameter sets.

221. The method of claim 219 in which said power levels are received via said signal from said remote receiver.

222. The method of claim 219 in which said signal includes at least one signal selected from the group comprising a message, a tone, a collection of tones, or a flag.

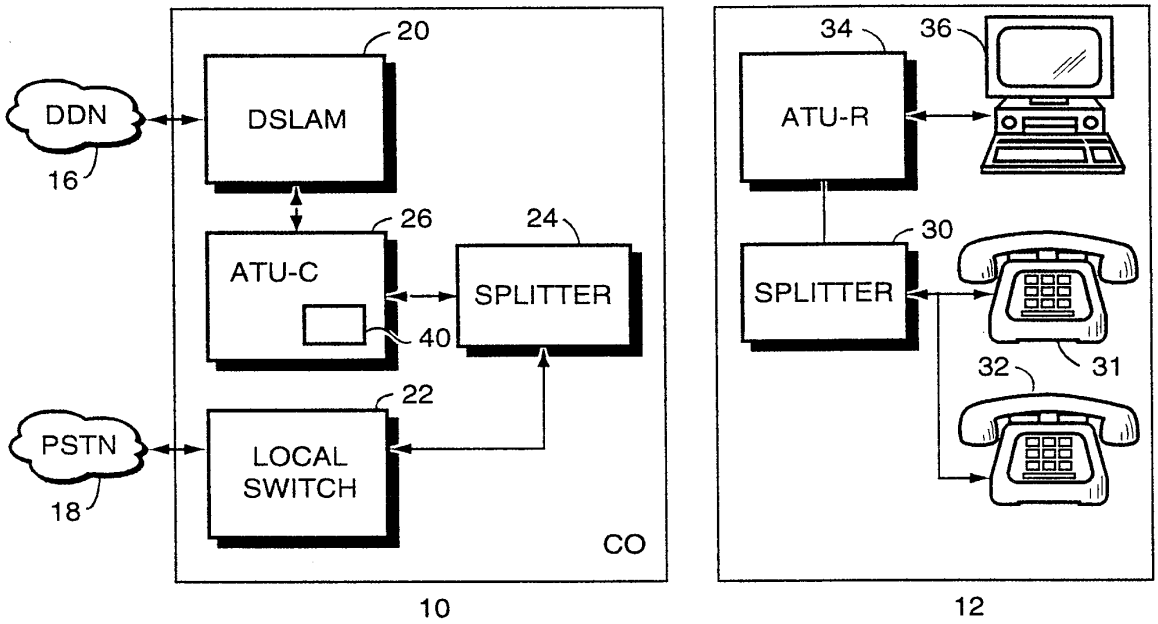

FIG. 1 (PRIOR ART)

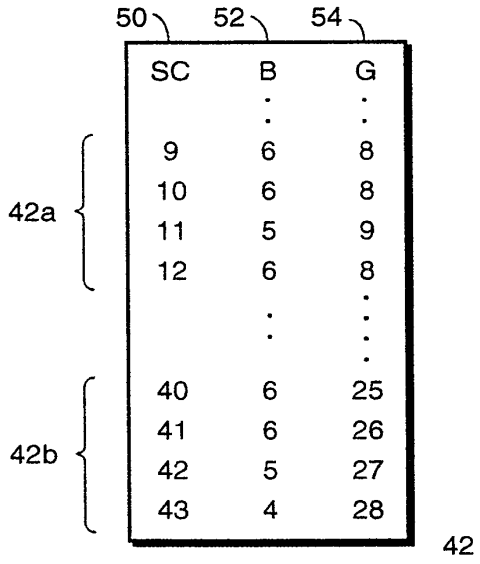

FIG. 2 (PRIOR ART)

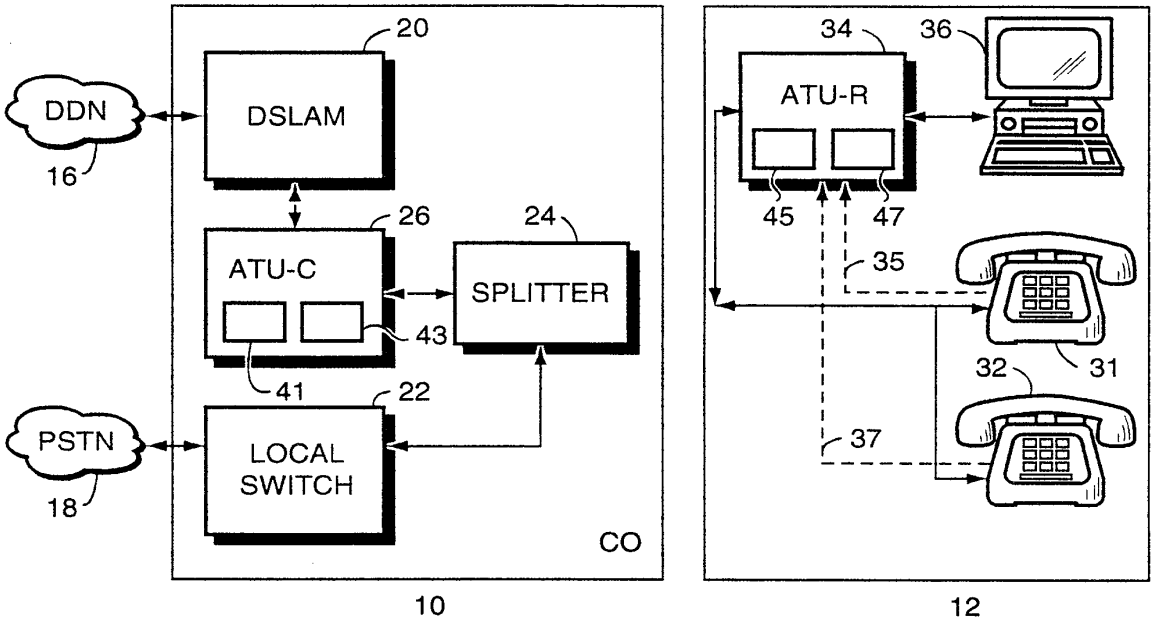
DDN
16
DSLAM
20
ATU-C
26
SPLITTER
24
43
41
22
PSTN
18
LOCAL SWITCH
CO
10
ATU-R
34
36
45
47
35
32
31
37
12

FIG. 3

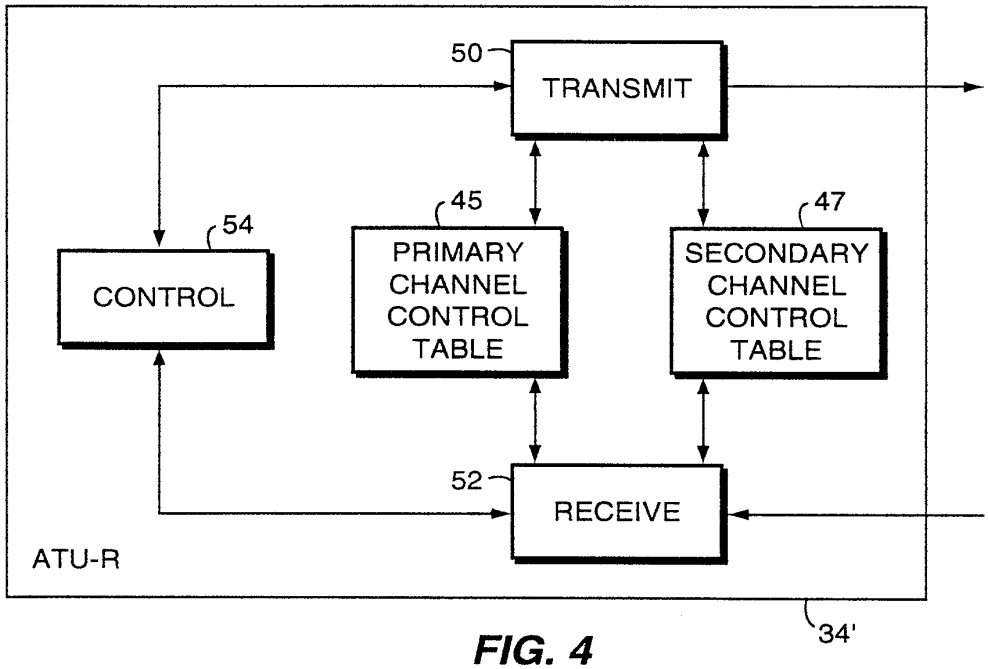
50
TRANSMIT
54
CONTROL
45
PRIMARY CHANNEL CONTROL TABLE
47
SECONDARY CHANNEL CONTROL TABLE
52
RECEIVE
ATU-R
34'

FIG. 4

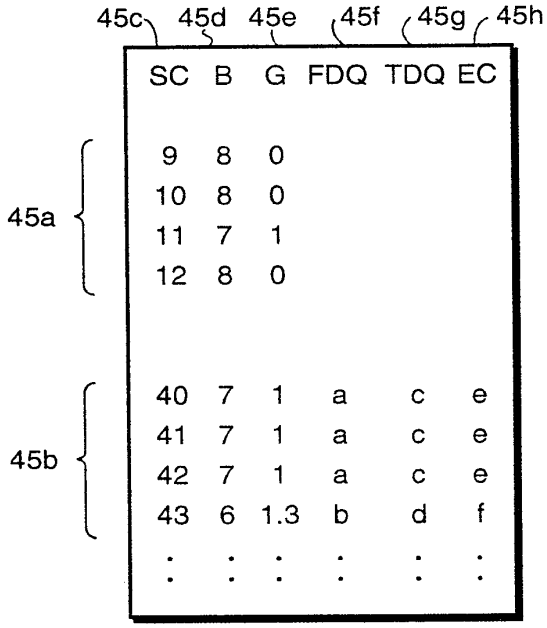
45c
45d
45e
45f
45g
45h
SC B G FDQ TDQ EC
45a
9 8 0
10 8 0
11 7 1
12 8 0
45b
40 7 1 a c e
41 7 1 a c e
42 7 1 a c e
43 6 1.3 b d f

FIG. 5A

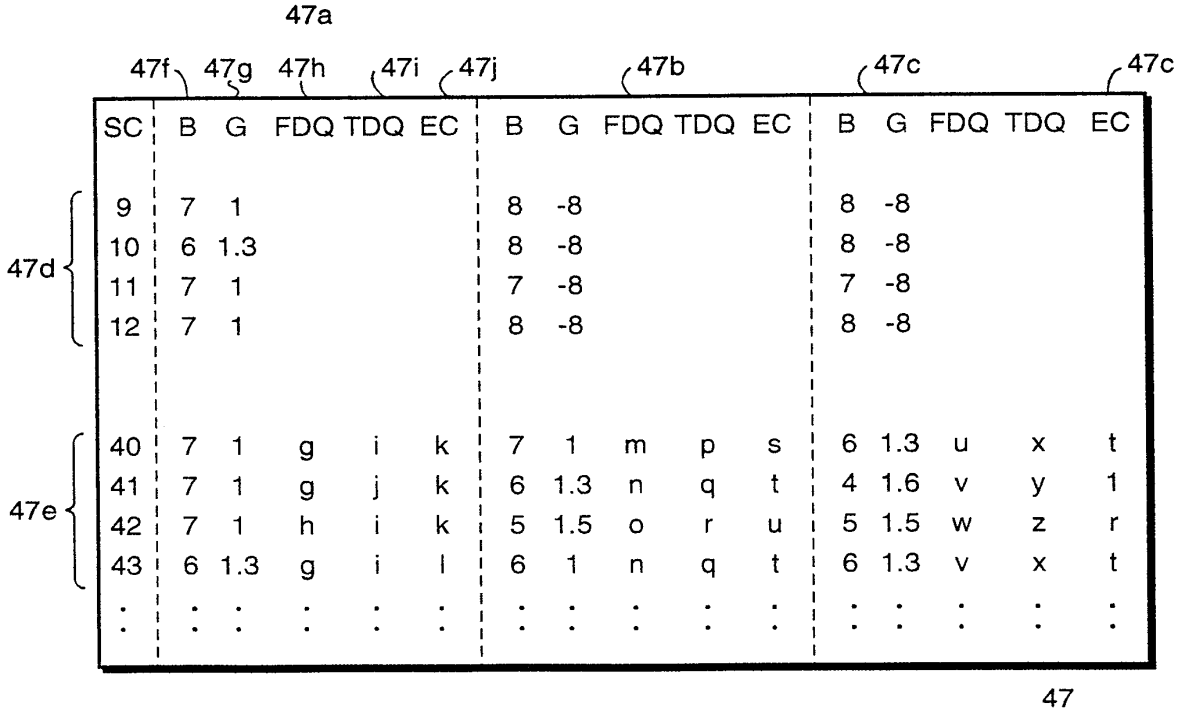
47a
47f
47g
47h
47i
47j
47b
47c
47c
SC B G FDQ TDQ EC B G FDQ TDQ EC B G FDQ TDQ EC
47d
9 7 1 8 -8 8 -8
10 6 1.3 8 -8 8 -8
11 7 1 7 -8 7 -8
12 7 1 8 -8 8 -8
47e
40 7 1 g i k 7 1 m p s 6 1.3 u x t
41 7 1 g j k 6 1.3 n q t 4 1.6 v y 1
42 7 1 h i k 5 1.5 o r u 5 1.5 w z r
43 6 1.3 g i l 6 1 n q t 6 1.3 v x t
47

FIG. 5B

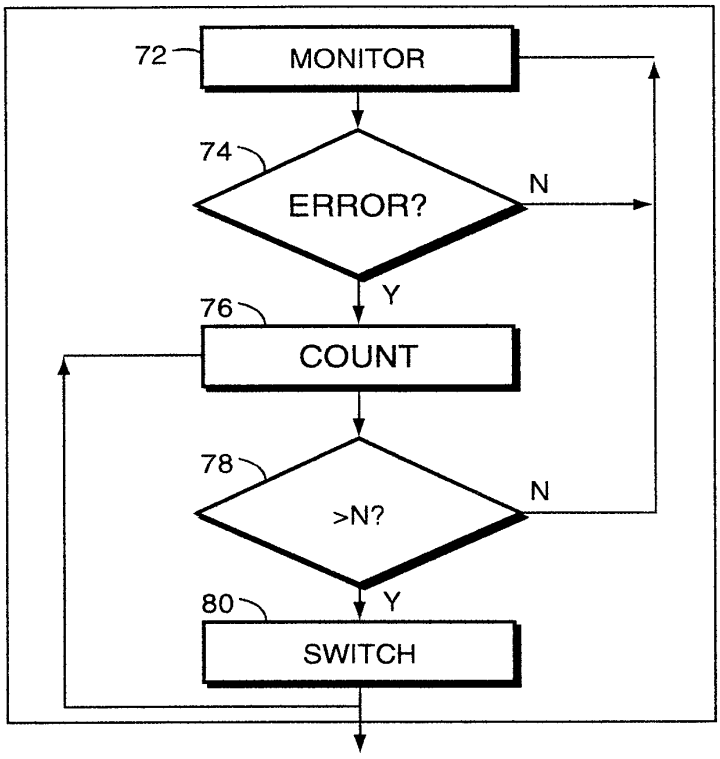
72
MONITOR
74
ERROR?
N
Y
76
COUNT
78
>N?
N
Y
80
SWITCH

FIG. 6

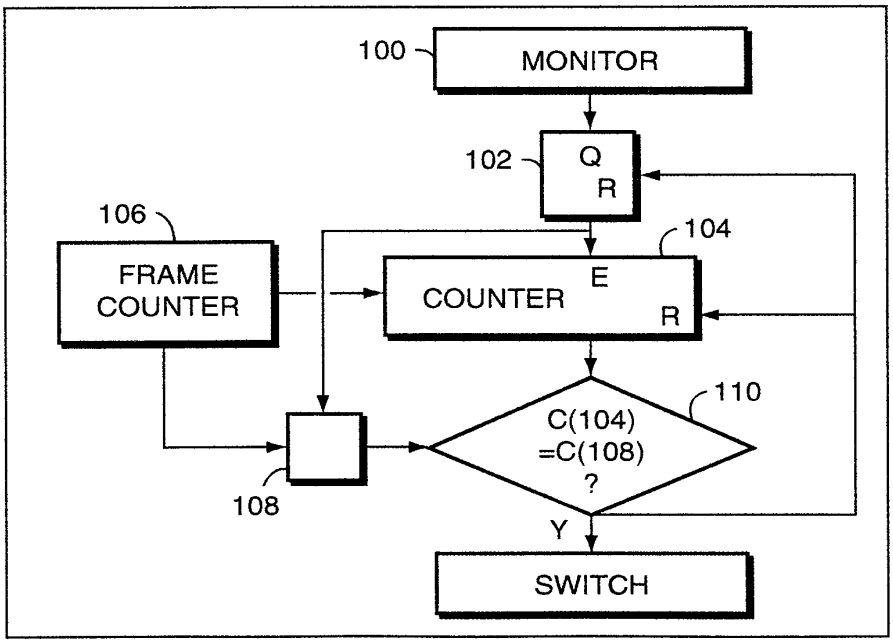
100
MONITOR
102
Q
R
106
FRAME
COUNTER
104
COUNTER
E
R
110
C(104)
=C(108)
?
108
Y
SWITCH

FIG. 7

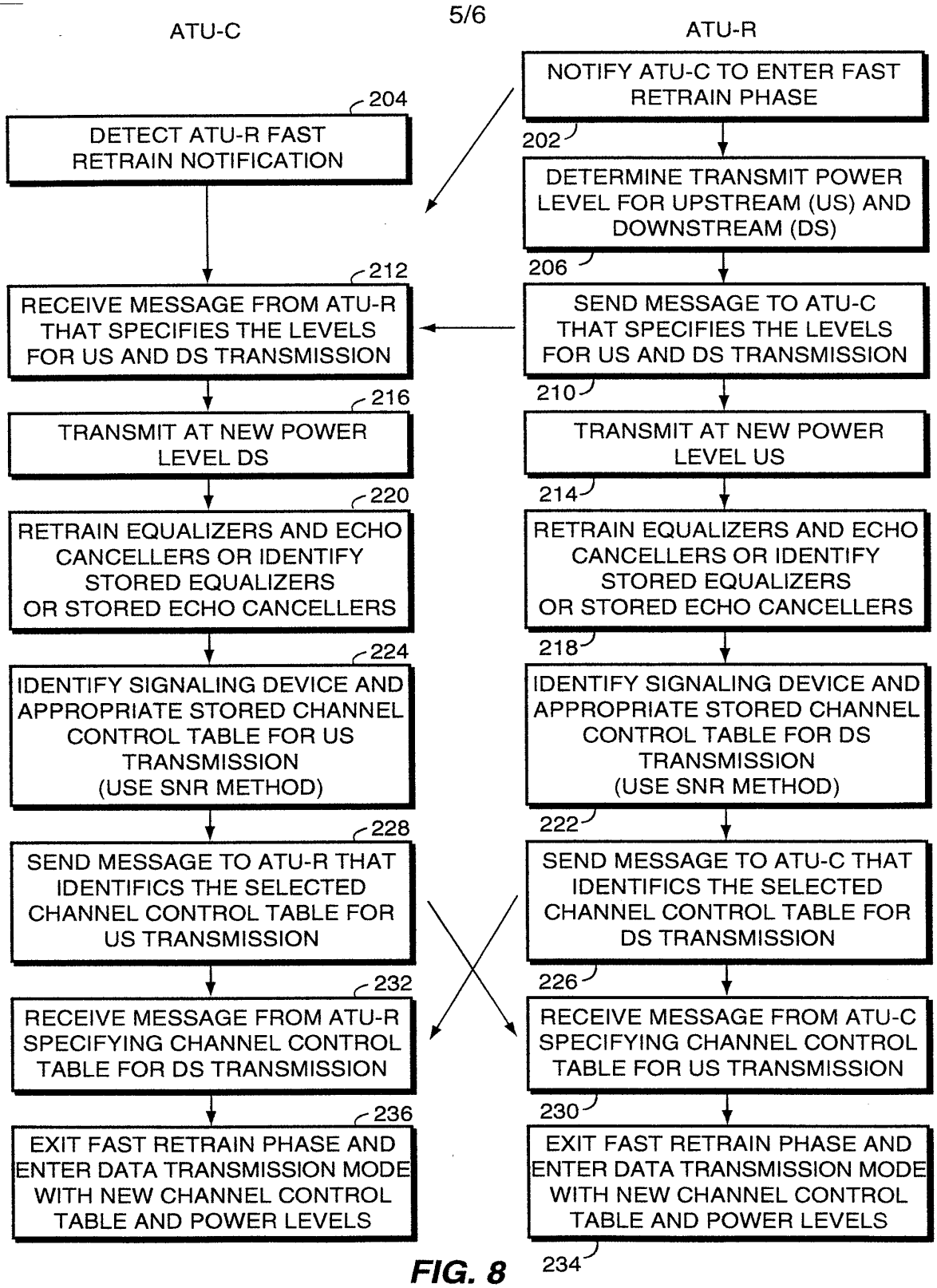

FIG. 8

SUBSTITUTE SHEET (RULE 26)

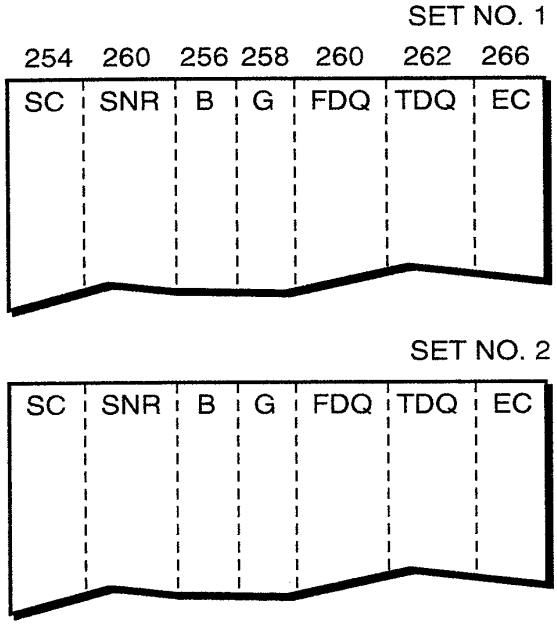

FIG. 9A

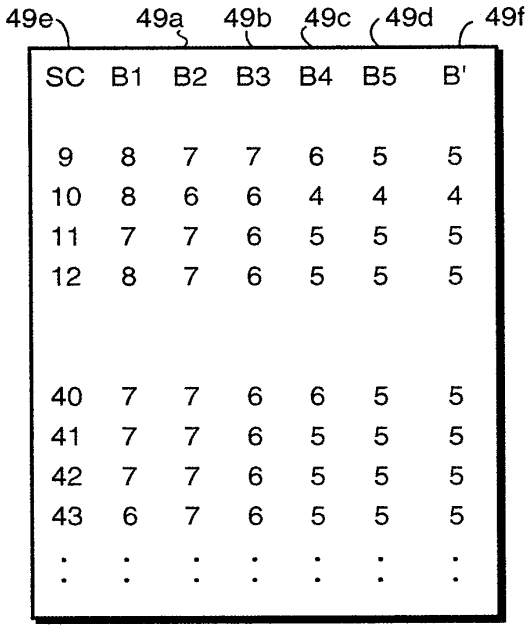

FIG. 5C

270 272 274 276

{SET No., SNR1, SNR2, SNR3, ...}

FIG. 9B

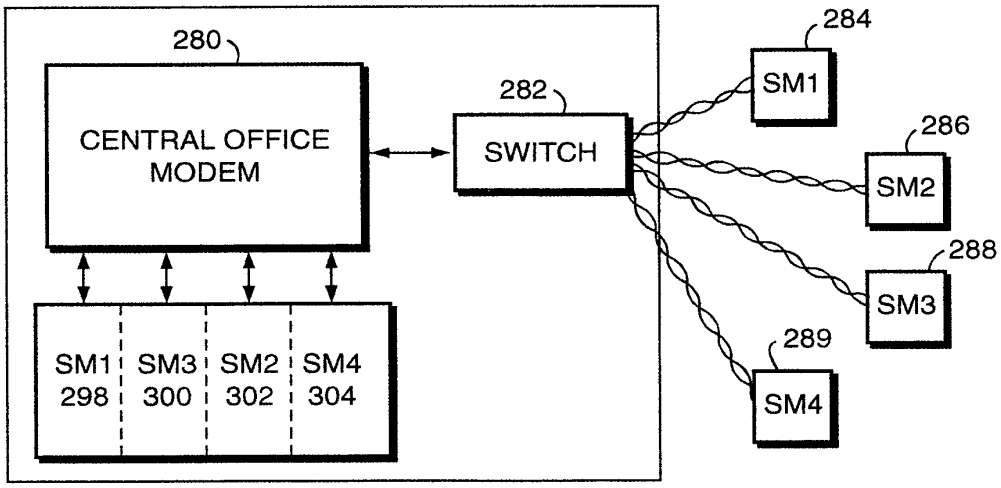

FIG. 10

PCT WORLD INTELLECTUAL PROPERTY ORGANIZATION
International Bureau

INTERNATIONAL APPLICATION PUBLISHED UNDER THE PATENT COOPERATION TREATY (PCT)

(51) International Patent Classification 6 : H04L 12/00	A2	(11) International Publication Number: WO 99/26375
		(43) International Publication Date: 27 May 1999 (27.05.99)

(21) International Application Number: PCT/US98/23336

(22) International Filing Date: 2 November 1998 (02.11.98)

(30) Priority Data:
60/066,021 14 November 1997 (14.11.97) US

(71) Applicant *(for all designated States except US)*: TEKTRONIX, INC. [US/US]; 14150 S.W. Karl Braun Drive, Mail Stop 50–LAW, P.O. Box 500, Beaverton, OR 97077 (US).

(72) Inventor; and
(75) Inventor/Applicant *(for US only)*: HAKANSON, Eric, W. [US/US]; 12190 N.W. Welsh Drive, Portland, OR 97229 (US).

(74) Agent: BUCHER, William, K.; Tektronix, Inc., Mail Stop 50–LAW, P.O. Box 500, Beaverton, OR 97077 (US).

(81) Designated States: CA, CN, KR, US, European patent (AT, BE, CH, CY, DE, DK, ES, FI, FR, GB, GR, IE, IT, LU, MC, NL, PT, SE).

Published
Without international search report and to be republished upon receipt of that report.

(54) Title: METHOD OF OPERATING A DIGITAL DATA DISTRIBUTION NETWORK

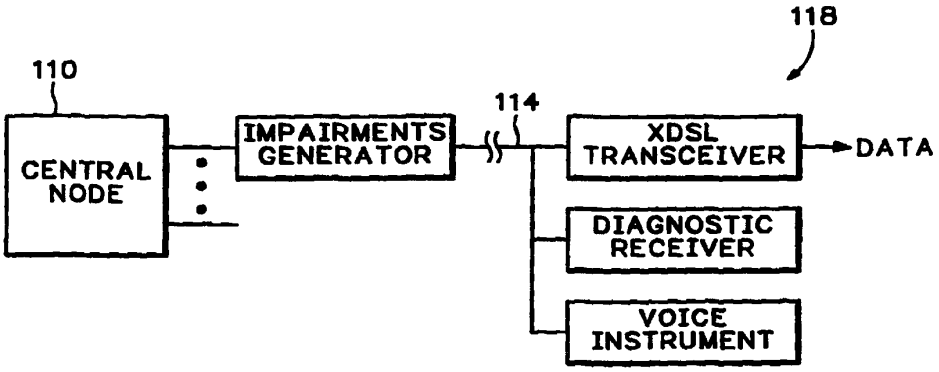

(57) Abstract

Digital data in error protected packets is used to modulate a carrier and the modulated carrier is impressed on a digital data distribution network for transmission to a receiver over a transmission path. In order to monitor operation of the data distribution network, the transmission path is impaired to a selected extent upstream of a transmission path segment that is to be tested and an error protected data packet is transmitted over the transmission path to the receiver. A determination is made at the receiver whether the received data packet is error free, and, if not, a message is transmitted from the receiver to the transmitter.

FOR THE PURPOSES OF INFORMATION ONLY

Codes used to identify States party to the PCT on the front pages of pamphlets publishing international applications under the PCT.

AL	Albania	**ES**	Spain	**LS**	Lesotho	**SI**	Slovenia
AM	Armenia	**FI**	Finland	**LT**	Lithuania	**SK**	Slovakia
AT	Austria	**FR**	France	**LU**	Luxembourg	**SN**	Senegal
AU	Australia	**GA**	Gabon	**LV**	Latvia	**SZ**	Swaziland
AZ	Azerbaijan	**GB**	United Kingdom	**MC**	Monaco	**TD**	Chad
BA	Bosnia and Herzegovina	**GE**	Georgia	**MD**	Republic of Moldova	**TG**	Togo
BB	Barbados	**GH**	Ghana	**MG**	Madagascar	**TJ**	Tajikistan
BE	Belgium	**GN**	Guinea	**MK**	The former Yugoslav Republic of Macedonia	**TM**	Turkmenistan
BF	Burkina Faso	**GR**	Greece			**TR**	Turkey
BG	Bulgaria	**HU**	Hungary	**ML**	Mali	**TT**	Trinidad and Tobago
BJ	Benin	**IE**	Ireland	**MN**	Mongolia	**UA**	Ukraine
BR	Brazil	**IL**	Israel	**MR**	Mauritania	**UG**	Uganda
BY	Belarus	**IS**	Iceland	**MW**	Malawi	**US**	United States of America
CA	Canada	**IT**	Italy	**MX**	Mexico	**UZ**	Uzbekistan
CF	Central African Republic	**JP**	Japan	**NE**	Niger	**VN**	Viet Nam
CG	Congo	**KE**	Kenya	**NL**	Netherlands	**YU**	Yugoslavia
CH	Switzerland	**KG**	Kyrgyzstan	**NO**	Norway	**ZW**	Zimbabwe
CI	Côte d'Ivoire	**KP**	Democratic People's Republic of Korea	**NZ**	New Zealand		
CM	Cameroon			**PL**	Poland		
CN	China	**KR**	Republic of Korea	**PT**	Portugal		
CU	Cuba	**KZ**	Kazakstan	**RO**	Romania		
CZ	Czech Republic	**LC**	Saint Lucia	**RU**	Russian Federation		
DE	Germany	**LI**	Liechtenstein	**SD**	Sudan		
DK	Denmark	**LK**	Sri Lanka	**SE**	Sweden		
EE	Estonia	**LR**	Liberia	**SG**	Singapore		

METHOD OF OPERATING A DIGITAL DATA DISTRIBUTION NETWORK

Background of the Invention

This invention relates to method of operating a digital data distribution network.

In a conventional cable television system, a video information signal in analog form, such as the NTSC composite video signal, is employed to modulate the RF carrier of an assigned RF transmission frequency channel at the system headend and the RF signal is distributed over a cable network to multiple subscriber nodes. At a subscriber node there may be a cable-ready television receiver including a tuner which can select the frequency channel and a detector which recovers the video information signal from the selected channel and employs it to control operation of the television display.

A data distribution system in which the information signal is transmitted in digital form has well known advantages over a system in which the information signal is transmitted in analog form. Accordingly, it has been proposed by the United States Federal Communications Commission (FCC) that terrestrial transmission systems under the jurisdiction of the FCC should phase out use of the NTSC composite video signal by 2007 and should instead use digital video information signals to modulate RF carriers. The digital video information signal provided by a video signal source will then be composed of a succession of bits segregated into digital data packets. The data packets modulate an RF carrier which is broadcast from the transmitter. Each period of the RF carrier conveys several bits of the digital information signal in one symbol. For example, in the 64QAM modulation scheme, each symbol conveys six bits of the digital information signal. The television receiver selects the frequency channel, detects an analog information signal, converts the detected information signal to digital form and recovers the digital data packets. The

digital information signal is then used to control operation of the television display.

The change in standards from analog to digital for terrestrial television transmission effectively dictates that cable television systems will also have to provide digital video signals in order for the video signals to be compatible with digital television receivers.

Referring to FIG. 1, a digital cable television system includes a digital processing interface 8 which receives a digital video information signal, such as the MPEG transport stream, and generates an error protected digital signal composed of a succession of error protected digital signal packets. The error protected digital signal is applied to a modulator 10 which employs it to modulate an RF carrier which is typically in the frequency range 50-550 MHz, although it may be higher or lower. The digitally modulated RF carrier is supplied to a transmitter 14 which impresses the signal on a propagation medium 16. In the case of a cable television system, the propagation medium is a network of coaxial cables configured as a trunk extending from the transmitter 14 and having numerous branches connected to the trunk by directional couplers 18, sub-branches connected to the branches by directional couplers, and so on, and connected at the subscriber nodes to digital television receivers 20.

Each receiver 20 has a front end 22 including a tuner (not shown) which converts the RF signal to intermediate frequency and an analog-to-digital converter (ADC) 26 which digitizes the IF signal and provides a digital output signal to a demodulator 30. The demodulator 30 removes the IF component and provides a digital output signal, which, ideally, should match the error protected digital signal provided to the modulator 10. The receiver front end 22 also includes a digital processing circuit 32 which carries out the inverse of the error protection algorithm employed at the headend and ideally provides at its output a digital video information signal which matches the signal supplied to the digital processing interface 8. The digital video

information signal from the digital processing circuit 32 is supplied through a decoder (not shown) which the MPEG transport stream and supplies an analog video signal to display circuitry 34 to control operation of the television display.

Error protection is employed in the digital cable television system to allow correction of bit errors, i.e. incorrect values of digital 1 or digital 0, in the output signal of the demodulator 30 caused by impairments in the transmission path from the input of the modulator 10 to the output of the demodulator 30.

Provided that the bit error rate is below a critical value, known as the critical bit error rate and generally considered to be about 10^{-4} for a digital television signal, digital error correction techniques can correct the errors and provide a signal having a bit error rate that may be less than 10^{-11}, which is sometimes referred to as quasi-error free. The maximum bit error rate that can be tolerated is considered to be about 10^{-3} before error correction.

Some video signals in a cable system are transmitted in encrypted form in order to restrict their use to subscribers who have paid an additional fee, either on a periodic basis for premium channels or on a pay-per-view basis for particular programs. In this case, the digital processing interface 8 not only applies a digital error protection algorithm but also encrypts the digital video information signal, so that the digital data packets provided to the modulator 10 are error protected and encrypted. In order to decrypt the digital data packets and regenerate the analog video signal, the subscriber is provided with a set top terminal 40 which is connected between the cable system connection and the display circuitry 34, by-passing the front end 22. The set top terminal includes a tuner (not shown) an ADC 42, a demodulator 44 and a digital processing circuit 46, performing the same general functions as the front end 22, but the digital processing circuit 46 performs not only error correction to recreate the digital signal applied to the

modulator 10 but also decryption in order to extract the digital video information signal supplied to the digital processing interface 8. It is expected that much of the programming distributed by digital transmission cable systems will be transmitted in encrypted form, so that a subscriber will need a set top terminal, or equivalent functionality built into the television receiver, in order to display a variety of programming.

The economic value of a cable television distribution system resides in its ability to distribute video payload, i.e. the program material that subscribers wish to view, to a large number of subscribers without excessive degradation. The system operator derives revenue based on the system's ability to distribute the video payload. Accordingly, it is important that the system operator be warned of impairments in the distribution system, so that these impairments can be corrected before they adversely affect the ability of the system to distribute video payload and hence the revenue derived by the system operator. The operator must therefore be able to measure impairments in transmission quality so that appropriate repairs can be made. Typical impairments that should be detected and repaired are reductions in signal-to-noise ratio (SNR), e.g. due to noise being coupled into the transmission channel, reductions in frequency response, reductions in phase response, phase noise, jitter, addition of interfering signals and addition of multipath signals.

Hitherto, it has been suggested that the bit error rate of an RF digital transmission system may be a satisfactory measure of transmission channel quality, but this measure is subject to disadvantage because an RF data distribution system in which the information signal is digital is subject to the "cliff effect," in that the curve that relates bit error rate to the quality of the transmission channel, expressed as signal-to-noise ratio, has a very steep drop off. Thus, referring to FIG. 2, a change of less than 1.5 dB in signal-to-noise ratio can cause the bit error rate to

change from less than 10^{-4} to more than 10^{-3}. The curves shown in FIG. 2 assume that the only impairment is noise when in fact there will always be other impairments, which can make the drop off even steeper. Accordingly, the system operator is not alerted to impairment of the transmission quality of the channel either by BER measurements or by a relatively small increase in subscriber complaints. On the contrary, the operator may not learn of an impairment until the system fails. This makes it difficult to monitor the noise margin in the system, to track degradations and fix degradations before a system failure.

In a report issued by the European Telecommunications Standards Institute (ETR 290: May 1997), it is suggested that the estimated noise margin is a better indicator of transmission channel quality than bit error rate. The estimated noise margin is based on the probability of mathematically added noise causing a bit error and is approximately the difference between the current estimated signal-to-noise ratio and the estimated signal-to-noise ratio at which the bit error rate exceeds the critical bit error rate. Use of the estimated noise margin to identify impairments is subject to disadvantage because it is computationally expensive and is not applicable to impairments other than noise. Further, its reliability is limited because there is an unknown set of errors associated with calculating the estimated noise margin. Since the estimated noise margin is not the same as the actual noise margin, there is a possibility that the current signal-to-noise ratio is substantially less than the estimated signal-to-noise ratio, and consequently the actual noise margin may be substantially less than the estimated noise margin. It would therefore be desirable to determine the actual noise margin of the transmission channel.

Summary of the Invention

In accordance with a first aspect of the invention there is provided a method of operating a digital data distribution

network having a transmitter and a receiver, wherein digital data is transmitted in error protected packets from the transmitter to the receiver over a transmission path by employing the digital data to modulate at least one carrier and impressing the modulated carrier on the network, said method comprising (a) generating an error protected data packet for transmission over the transmission path, (b) impairing the transmission path to a selected extent upstream of a transmission path segment that is to be tested, (c) transmitting the data packet over the transmission path, (d) receiving the data packet at the receiver, and (e) determining whether the received data packet is error free.

In accordance with a second aspect of the invention there is provided a method of operating a digital data distribution network having a transmitter and a receiver, wherein digital data is transmitted in error protected packets from the transmitter to the receiver over a transmission path by employing the digital data to modulate at least one carrier and impressing the modulated carrier on the network, said method comprising (a) generating an error protected data packet for transmission over the transmission path, (b) transmitting the data packet over the transmission path as an analog signal, (c) receiving the analog signal at the receiver, (d) recording the analog signal received at the receiver, and (e) transmitting the record of the analog signal to a remote location for analysis.

In accordance with a third aspect of the invention there is provided a method of operating a digital data distribution network having a transmitter and a receiver, wherein digital data is transmitted in error protected packets from the transmitter to the receiver over a transmission path by employing the digital data to modulate at least one carrier and impressing the modulated carrier on the network, said method comprising generating an error protected data packet for transmission over the transmission path, impairing the transmission path to a selected extent upstream of a transmission path segment that is to be tested, transmitting

the data packet over the transmission path, receiving the data packet at the receiver, and counting bit errors in the received data packet.

In accordance with a fourth aspect of the invention there is provided a method of operating a digital data distribution network having a transmitter and a receiver, wherein digital data is transmitted in error protected packets from the transmitter to the receiver over a transmission path by employing the digital data to modulate a carrier and impressing the modulated carrier on the network, said method comprising (a) generating an error protected data packet for transmission over the transmission path, (b) impairing the transmission path to a selected extent upstream of a transmission path segment that is to be tested, (c) transmitting the data packet over the transmission path as an analog signal, and (d) receiving the analog signal at the receiver.

Brief Description of the Drawings

For a better understanding of the invention, and to show how the same may be carried into effect, reference will now be made, by way of example, to the accompanying drawings, in which

FIG. 1 is a partial schematic block diagram of a proposed form of cable television system,

FIG. 2 is a graph illustrating bit error rate as a function of signal-to-noise ratio in a digital data communication system.

FIG. 3 is a partial schematic block diagram of the headend and receiver in a cable television system embodying the present invention,

FIG. 4 is a map of part of a cable television system, and

FIG. 5 is a partial schematic block diagram of a digital subscriber line system.

Detailed Description

A first application of the invention will be described with reference to a digital cable television system.

The cable TV system shown in FIGS. 3 and 4 is used to distribute digital video information signals from a headend 48 to subscriber nodes 50. Referring to FIG. 3, the headend 48 includes a digital processing interface 8, a modulator 10 and a transmitter 14 similar to the corresponding elements shown in FIG. 1. The digital processing interface receives the MPEG 2 transport stream and performs various operations, including energy dispersal, error protection, interleaving and base band shaping in order to generate inphase and quadrature signals which are applied to the modulator 10. All the functions of the digital processing interface, and possibly also the functions of the modulator, may be performed in a single integrated circuit. In addition, the headend 48 includes an impairments generator 60. The impairments generator 60 may be located between the transmitter 14 and the cable network 16, as shown in FIG. 3, or it may be incorporated in the digital processing interface 8 or the modulator 10. The effect of the impairments generator 60 is to degrade to a selectively controllable extent the quality of the transmission path between the digital processing interface 8 and the subscriber nodes 50. The impairments generator may function by adding noise to the transmission channel or degrading the frequency response or phase response of the transmission channel. Further, the impairments generator may introduce "spurs" (spurious modulation products) and phase noise or jitter. The manner in which the impairments can be applied to the transmission channel is well known to those skilled in the art. Considering, for example, the signal-to-noise ratio, the quality of the channel may be degraded at the headend using an impairments generator that couples noise into the transmission channel. The extent to which the signal-to-noise ratio is degraded depends on the amplitude of the noise.

As shown in FIG. 4, the cable network 16 includes a trunk extending from the headend 48. Branches and sub-branches are connected to the trunk by directional couplers 18. Each subscriber node 50 is at the end of a branch or sub-branch. The cable system operator maintains a map of the cable network, showing schematically the topology of the path to each subscriber node 50. At each active subscriber node 50, there is a diagnostic cable receiver 64 (FIG. 3) connected between the cable network and the display circuitry 34 of the subscriber's digital television receiver. The cable receiver 64 may be implemented as a set top terminal or it may be housed in the same cabinet as the digital television receiver. Each cable receiver has a unique ID and the cable system operator maintains a database relating cable receiver IDs with the subscriber nodes and billing addresses. If the database also relates the cable receiver IDs with physical addresses, the system operator is able to determine not only the physical location of each cable receiver but also the topology of the path between the headend and each cable receiver.

Referring to FIG. 3, the cable receiver 64 includes a tuner (not shown) for converting the received signal to the intermediate frequency, an ADC 66, a demodulator 68, a digital processing circuit 70 and a decoder (not shown), similarly to the set top terminal 40 described with reference to FIG. 1. A controller 74 included in the cable receiver controls operation of the other components of the cable receiver 64.

The capabilities of the digital processing circuit 70 are expanded relative to those of the digital processing circuit 46. The digital processing circuit 70 has a video data output for supplying the MPEG transport stream to the decoder, which supplies an analog video signal to the display circuitry 34 of the digital television receiver. The digital processing circuit 70 includes an error bits counter which accumulates the number of error bits in the received signal. The error bits counter can be queried by the controller 74

and reset from time to time, so that the controller is able to calculate the bit error rate based on the error bit count and the time that has elapsed since the counter was reset. The controller 74 supplies a digital data word representing the calculated value of the bit error rate to a digital processing interface 76, which produces an error protected data packet.

The cable receiver 64 also includes a memory 80 which can be enabled to store the output signal of the ADC 66 during a selected interval. The stored digital signal is applied to the digital processing interface 76 to generate an error protected data packet. The error protected data packet produced by the digital processing circuit 76, either from the bit error rate word or from the signal provided by the memory 80, is supplied to a modulator 82. The modulator 82 uses the error protected data packet to modulate an RF carrier, typically at a frequency in the range 5-50 MHz, although it may be higher or lower. The modulated RF signal is applied to a transmitter 84 which impresses the signal on the cable network.

The headend 48 of the cable system also includes a receiver 90 for receiving the return messages provided by the transmitter 84 in each of the cable receivers 64. The receiver 90 includes a tuner (not shown), an ADC 92 which digitizes the return message signal, a demodulator 94 which removes the IF component and provides a digital output signal which, ideally, should match the error protected return message packet provided by the digital processing interface 76, a digital processing circuit 96 which carries out the inverse of the error protection algorithm employed in the digital processing interface 76 and ideally provides at its output a data signal which matches the input signal provided to the digital processing interface 76, and a report/display device 98. It will be understood that the headend includes a controller (not shown) for controlling operation of the various components thereof.

In a first mode of operation of the cable television system shown in FIG. 3, the system is used to measure the bit error rate of the transmission channel to each of the subscriber nodes. In this mode of operation, the headend controller issues a signal which is transmitted to the cable receivers, instructing the cable receivers to calculate bit error rate during a selected measurement interval, which may be defined by reference to start and stop flags included in the data stream or by reference to specific start and stop times supplied to the cable receivers by the headend.

During the measurement interval, the controller 74 calculates the bit error rate and provides an output word representative thereof. The calculated bit error rate is reported back to the headend with the cable receiver ID and a report or display is generated. The report/display device may accumulate information received from numerous cable receivers 64 and generate a report or display showing trends in bit error rate with time.

Alternatively, or in addition, the report/display device may generate a report or display showing bit error rate as a function of the locations of the cable receivers in the cable network, for example. The system operator is thereby able to determine, on a node-by-node basis, the bit error rates of the signal propagation paths between the transmitter 14 and the subscriber nodes. By comparing the bit error rates reported by different cable receivers, the cable system operator may be able to determine the location in the cable network of a particular impairment. For example, referring to FIG. 4, if the cable receivers at nodes 50C and 50D have poor transmission margin compared to the terminals at nodes 50A, 50B, 50E and 50F, indicated by high bit error rate, then it is likely that there is an impairment between the directional couplers 18_2 and $18_{2,1}$.

It will be appreciated that a test of this nature will generate a response message from each cable receiver, and accordingly it may be advantageous to instruct only selected

cable receivers to calculate the bit error rate and provide return messages.

As noted previously, the bit error rate of the propagation path may be of limited value for monitoring degradation of the transmission quality, and it may be better to measure noise margin.

In order to measure the noise margin, i.e. the difference between the current signal-to-noise ratio and the SNR at which the bit error rate exceeds the critical bit error rate, the headend controller instructs the cable receivers (or a selected group of cable receivers) to report when the bit error rate calculated by the controller 74 exceeds the critical bit error rate. The headend controller operates the impairments generator 60 to add a noise impairment to the signal emitted by the transmitter. The noise amplitude is progressively increased, for example in stair-step fashion. In each of the cable receivers addressed by the headend controller, the controller 74 provides an output indicating the bit error rate. When the bit error rate at a given cable receiver 64 without addition of the noise impairment is sufficiently low, and the bit error rate with addition of the noise impairment exceeds the critical bit error rate, the level of impairment introduced by the impairments generator is approximately equal to the noise margin for the transmission channel from the transmitter 14 to that cable receiver. (If the impairments generator were upstream of the transmitter, the level of impairment introduced by the impairments generator would be related to the noise margin for the segment of the transmission path between the impairments generator and the cable receiver.) The cable receiver reports that the critical bit error rate has been exceeded, and includes its ID in the report. The cable system operator is thereby able to determine the noise margin to critical bit error rate on a node-by-node basis by correlating the cable receiver IDs with the level of impairment at which each cable receiver provides a report. It is, of course, necessary to correlate the report that the

critical bit error rate has been exceeded with the noise level at which the report was generated. This may be accomplished by including framing bits in the signal transmitted by the head end in the event that the cable receiver reports immediately that the critical bit error rate has been exceeded. Alternatively, the headend controller may maintain a log recording level of impairment as a function of time and the report could include a time stamp indicating the time at which the critical bit error rate was exceeded.

It may be helpful in locating system impairments in the system shown in FIG. 3, to apply an impairment to the transmission channel and observe the effect of that impairment at multiple locations simultaneously.

If there is an impairment in the trunk of the cable network or in a major branch, it is likely that many cable receivers will respond to the stair-step type of impairment and the reverse transmission system would become jammed by the message storm. This can be avoided by testing all cable receivers at relatively short intervals, with a small level of impairment. Appropriate selection of the level of impairment should ensure that relatively few cable receivers will report a malfunction or failure condition. If this indeed occurs, the operator then has confidence that the transmission channel has a reasonable margin. If there is an unexpectedly large number of return messages, the headend controller may broadcast a message to all cable receivers instructing them not to send error information but to reset and measure again. The headend then repeats the test with a lower level of impairment in order to locate the regions of the network for which the noise margin is smallest. At longer intervals, e.g. daily or monthly, the operator tests all cable receivers with a stair-step sequence of impairments preceded by a message that the cable receivers should report the result of the test only when polled. The headend then polls the cable receivers and the cable receivers respond to the poll by reporting the actual transmission margin. The polling is best done during an idle period, so as not to

interfere with revenue generating transmissions. Since the transmission margin from the headend to each cable receiver can be inexpensively monitored, the problem of locating an impairment in the cable network is greatly simplified.

If multiple impairments exist, it can be difficult to locate the impairment responsible for a failure condition. For example, referring to FIG. 4, the reduction in transmission margin downstream of an impairment in cable segment 102 may be quite small and may be swamped by another impairment upstream in the system, e.g. in cable segment 104. Alternatively, two different impairments, e.g. in cable segments 102 and 106, may cause similar reductions in transmission margin, thus leading to the erroneous conclusion that there is a single impairment in a branch that is common to the nodes 50C and 50E, e.g. cable segment 104. If the impairments are of different types, e.g. noise and jitter, this problem can be solved by classifying the impairments.

In order to classify impairments, it is necessary to observe the effect of the impairments on symbols, as opposed to the bits used to encode the symbols.

Impairments can be classified by comparing the waveform of the signal received at the subscriber node with the waveform of the transmitted signal.

This is accomplished by using the memory 80 to capture the digital output signal of the ADC 66 during a test interval and transmitting the captured waveform back to the headend. The digital processing circuit 96 provides an output signal that matches the captured portion of the output signal of the ADC 66 and can be compared with the output signal of the transmitter 14 during the corresponding time interval, so that the effect of the impairments on symbols can be determined.

Alternatively, the captured sample of the waveform can be analyzed locally using a measurement instrument.

There are several ways in which impairments can be classified. One technique is to derive the error vector waveform and extract the spectrum of the error vector. The

presence of various impairments, such as noise, coherent distortions and spurious modulation products, can be deduced from the spectrum of the error vector. Amplitude and phase modulation impairments can be deduced from the Hilbert Transform of the error vector waveform.

The error vector waveform is derived by subtracting the signal received at the input of the cable receiver from the transmitted signal. Typically, the cable receiver will include an equalizer downstream of the ADC, often as part of the demodulator. If the equalizer is upstream of the point at which the received signal is read for storing in the memory 80, it affects the timing of the received signal and its effect must be removed in order for the received signal waveform to reflect the condition of the transmission path. This can be accomplished by using the equalizer coefficients to create a digital filter having a transfer function that is the inverse of the transfer function of the equalizer. The error vector waveform is then generated by subtracting the output waveform of the digital filter from the transmitted waveform.

Once the impairments have been classified, a particular existing system impairment is chosen for testing. The chosen impairment might be the impairment suspected of most likely causing a reduced transmission margin. The impairments generator then adds this impairment, at a sufficient level that the combined effect of the existing system impairment and the added impairment will be greater than the level previously detected for the existing impairment. Since the normal cable receiver is not calibrated for level, and there is a potential for destructive interference between the existing system impairment and the added impairment, the new aggregate level of impairment is best measured by repeating the recording and classification process and determining by how much the level of impairment has changed. If addition of this impairment causes a system failure report from the cable receiver at one subscriber node but not from the cable

receiver at another node, it can be inferred that the two nodes are affected by different impairments.

If multiple similar impairments exist simultaneously, the impairments cannot be separated by classification and the problem of locating the impairments is more complex. However, if several of the diagnostic cable receivers are instructed to record the received waveform simultaneously, signal processing of the digitized waveforms can be used to extract the separate locations of the multiple similar impairments. The cable receivers can be made to measure simultaneously by means of two mechanisms. In accordance with the first mechanism, a protocol that instructs all cable receivers (possibly just all unused cable receivers or just selected cable receivers) to tune to a particular channel and stop recording when the end of a particular data packet is received can be broadcast to all (or some) cable receivers. This method can provide robust, but relatively coarse, timing. More precise time correlation can be achieved by inserting a time mark in the broadcast waveform, and suitable signal processing can then be used to align the received waveforms with the broadcast waveform. The time mark may be inserted by transmitting a message such that there will be a transition through a selected signal level, e.g. zero volts, at a selected time, typically late in a packet.

One way of extracting the separate locations of multiple impairments has two steps. First, the error vector waveform for each subscriber node is generated by subtracting the transmitted waveform from the waveform received at each node. Second, the cross-correlation function cev (X, Y) of the error vector waveforms for two subscriber nodes 50X and 50Y is derived. Error vectors that are common to the two nodes are revealed by the cross-correlation function. When computing the cross-correlation functions along the logical path of the network from an end point (such as a subscriber node) toward the transmitter, the location of the impairment can be determined when the value of the cross-correlation function becomes smaller. For example, referring again to

FIG. 4, and assuming that cev (E, F) indicates a common impairment and cev (A, F) indicates that the common impairment is missing, there must be an impairment between the logical locations of nodes 50A and 50E in the transmission path to node 50F. If cev (C, F) indicates a common impairment, the impairment must be between the nodes 50A and 50C. Since the only part of the network between nodes 50A and 50C that is in the transmission path to node 50F is the segment between the coupler 18_1 and the coupler 18_2, the impairment must be located there.

As a second example, if cev (C, D) indicates a common impairment and cev (A, D) indicates that the common impairment is missing, there must be an impairment logically located between node 50A and the coupler $18_{2,1}$. This implies that the impairment must be located between the directional coupler 18_1 and the coupler $18_{2,1}$. If cev (D, E) indicates that the common impairment is missing, the impairment is not between directional coupler 18_1 and the directional coupler 18_2, and so the impairment must be between the directional coupler 18_2 and the coupler $18_{2,1}$.

It is necessary to carry out the tests using the impairments generator with minimal disturbance to the revenue generating communication traffic. This is accomplished by adding the impairments only to selected packets or segments of data having a relatively low value with respect to the revenue generating communication traffic.

Most digital video transmission systems utilize the MPEG transport stream. The MPEG transport stream is composed of several MPEG elementary streams which are multiplexed to produce the MPEG transport stream. Stuffing bits are inserted in order to create the constant bit rate MPEG transport stream. It is important that the impairment should degrade only the stuffing bits or other non-customer (i.e. non-payload) bits. Since the impairments are added in the analog domain (in the case of the impairments generator being downstream of the transmitter), the impairments are applied to the transmitted symbols, in which several bits are

encoded. Interleaving in constructing the transmitted data stream may result in a symbol containing bits derived from multiple elementary streams. Accordingly, it is necessary to detect when a symbol consists entirely of non-customer bits and degrade only those symbols. The cable receiver 64 can be instructed to pick out a degraded symbol by including a private data message in the MPEG transport stream. The message might, for example, instruct the cable receiver to pick out a numerically specified symbol after the next sync byte after the Program Clock Reference for a specified Program ID. It will be appreciated that the impairments could be added in the digital domain, e.g. in the digital processing interface 8. In this case, while the impairments are added in the digital domain, they are nevertheless a description of the desired analog waveform, so the impairments are of an analog nature.

An alternative is to include the impairment at a time when all of the payload bits are of relatively low perceived value. For example, the operator might include a special announcement simultaneously on all of the program streams contained in a single transmitted channel. The time of transmission of this announcement is chosen so that the balance between the loss of advertising revenue and the benefit of announcing the quality enhancement efforts is optimized. The announcement might indicate that the system operator is testing the network to ensure that subscribers receive the best possible quality, and thereby has some value. In either case, it is necessary to ensure that the symbol that is degraded does not contain customer bits or that the probability of causing an uncorrectable error is acceptably low.

A cable television network may be used to provide bidirectional voice communication, similarly to the public telephone network. In this case, the subscriber's telephone instrument is not connected to the public telephone network but is connected through a suitable adapter to the television cable network. The adapter digitizes the subscriber's

outgoing voice message and employs it to modulate a carrier, and similarly detects and converts to analog form an incoming digitized voice message. The headend is connected to the telephone instrument of the other party to the call through another network, which might be the public telephone network or include another cable distribution system. In either case, voice messages are transmitted bidirectionally between the subscriber node and the headend over the cable network by digitizing the voice messages and modulating a carrier with the digitized voice messages. The test method described herein can be used for testing a transmission channel used for voice transmission by providing a diagnostic function in the equipment at the subscriber node. The diagnostic function may be added to the functions performed in the subscriber's telephone/cable adapter or may alternatively be provided by a separate diagnostic receiver.

Bidirectional voice transmissions tend to be bursty, but excessive latency in response may be objectionable to the user. Accordingly, test packets should only be used during transmission if they are short enough that they will not cause excessive latency. Alternatively, since voice transmissions tend to be relatively short and have a protocol for starting and finishing each transmission session, test packets may be sent when setting up a call, tearing down a call, or during idle times.

FIG. 5 illustrates schematically a public telephone network including a node 110, such as a central office or fiber node, and subscriber lines 114 extending from the central node 110 to respective subscriber nodes 118. Analog voice traffic may be carried on the lines 114. Digital data may also be transmitted over the subscriber lines. For example, the central node may be connected to an internet service provider and provide for data transmission between a subscriber node and the ISP. In accordance with an xDSL protocol, such as ADSL (asynchronous digital subscriber line), the digital data is used to modulate one or more carriers, each having a frequency outside the audio range and

the digital data can then be transmitted concurrently with the analog voice traffic. In this case, the central node includes an xDSL transceiver and the subscriber node also includes an xDSL transceiver, for transmitting data between the central node and the subscriber node using the ADSL protocol.

The invention may be used to test the subscriber lines 114 to ensure that the digital data can be transmitted error free. At the subscriber node, the xDSL transceiver includes, or is provided with, a diagnostic receiver which operates similarly to the diagnostic cable receiver illustrated in FIG. 3. This provides a technique for detecting impairments in the transmission channel from the central node to individual subscriber nodes before the transmission channel is degraded to such an extent that error protected data packets cannot be recovered at the subscriber node. The other functions described with reference to FIGS. 3 and 4, such as transmission of messages to a central location and remote classification of impairments, apply to the system described with reference to FIG. 5.

In the case of data transmission, it is much simpler to include impaired packets in the transmission because data transmissions are usually bursty. By using a broadcast protocol, many subscriber lines can be tested in parallel by sending test packets to all subscriber nodes simultaneously. When testing an individual subscriber line, it is necessary to control operation of the impairments generator to ensure that the packet address will not be impaired, so that the subscriber node can correctly identify a packet intended for it. Rather, only the data inside the packet should be impaired.

It will be appreciated that the invention is not restricted to the particular embodiments that have been described, and that variations may be made therein without departing from the scope of the invention as defined in the appended claims and equivalents thereof. For example, although the description of FIGS. 3 and 4 refers to the

return path from the subscriber node 50 to the headend 48 as being the cable that is used for transmission from the headend to the subscriber node, it may instead be implemented by another medium, such as the public switched telephone network.

Claims

1. A method of operating a digital data distribution network having a transmitter and a receiver, wherein digital data is transmitted in error protected packets from the transmitter to the receiver over a transmission path by employing the digital data to modulate at least one carrier and impressing the modulated carrier on the network, said method comprising:

(a) generating an error protected data packet for transmission over the transmission path,

(b) impairing the transmission path to a selected extent upstream of a transmission path segment that is to be tested,

(c) transmitting the data packet over the transmission path,

(d) receiving the data packet at the receiver, and

(e) determining whether the received data packet is error free.

2. A method according to claim 1, further comprising, if the transmission path is not error free, transmitting a message from the receiver to the transmitter.

3. A method according to claim 1, wherein step (c) comprises progressively increasing the extent to which the transmission path is impaired.

4. A method according to claim 1, wherein the network has a plurality of receivers and digital data is transmitted to the receivers over respective transmission paths, step (b) comprises transmitting the data packet to the receivers over the respective transmission paths, step (d) comprises receiving the data packet at each receiver, and step (e) comprises determining at each receiver whether the received data packet is error free.

5. A method according to claim 4, further comprising, if the transmission path to a selected receiver is not error

free, transmitting a message from the selected receiver to the transmitter, and analyzing messages received at the transmitter.

6. A method according to claim 4, wherein the method comprises detecting receivers that report higher than average error rates and comparing the transmission paths to the respective receivers in a manner such as to derive information from the receivers that report higher than average error rates.

7. A method according to claim 4, wherein step (c) comprises progressively increasing the extent to which the transmission path is impaired and the method further comprises:

transmitting a message from a receiver to the transmitter if the transmission path to that receiver is not error free, and

correlating messages received at the transmitter with the extent to which the transmission path is impaired.

8. A method of operating a digital data distribution network having a transmitter and a receiver, wherein digital data is transmitted in error protected packets from the transmitter to the receiver over a transmission path by employing the digital data to modulate at least one carrier and impressing the modulated carrier on the network, said method comprising:

(a) generating an error protected data packet for transmission over the transmission path,

(b) transmitting the data packet over the transmission path as an analog signal,

(c) receiving the analog signal at the receiver,

(d) recording the analog signal received at the receiver, and

(e) transmitting the record of the analog signal to a remote location for analysis.

9. A method according to claim 8, wherein step (e) comprises transmitting the record of the analog signal to the transmitter for analysis.

10. A method according to claim 8, wherein step (d) comprises digitizing the analog signal and the method further comprises deriving digital data from the digitized signal, forming a data packet from the digital data derived from the digitized signal, transmitting the data packet to the transmitter as an analog signal, digitizing the analog signal received at the transmitter, and processing the digitized signal at the transmitter.

11. A method according to claim 10, wherein the step of processing the digitized signal at the transmitter comprises deriving the error vector waveform for the transmission path to the receiver.

12. A method according to claim 8, wherein the network has a plurality of receivers and digital data is transmitted to the receivers over respective transmission paths, step (d) comprises digitizing the analog signal at each receiver, and the method further comprises deriving digital data from the digitized signal at each receiver, forming data packets at the respective receivers from the digital data derived from the digitized signal at each receiver, transmitting the data packets to the transmitter as analog signals, digitizing the analog signals received at the transmitter, and processing the digitized signals at the transmitter, and the step of processing the digitized signal at the transmitter comprises deriving the error vector waveforms for the transmission paths to at least first and second receivers and deriving the correlated error vector function for the transmission paths to the first and second receivers.

13. A method according to claim 8, wherein the network has a plurality of receivers and digital data is transmitted

to the receivers over respective transmission paths, and the method comprises deriving digital data from the digitized signal at each receiver, transmitting the digital data to the transmitter, and analyzing data received from multiple receivers to extract the locations of uncorrelated impairments.

14. A method according to claim 8, comprising processing the digitized signal to classify an impairment in the transmission path and testing the transmission margin of the transmission path with respect to the impairment by impairing the transmission path using that impairment.

15. A method according to claim 8, further comprising impairing the transmission path to a selected extent upstream of a transmission path segment to be tested.

16. A method of operating a digital data distribution network having a transmitter and a receiver, wherein digital data is transmitted in error protected packets from the transmitter to the receiver over a transmission path by employing the digital data to modulate at least one carrier and impressing the modulated carrier on the network, said method comprising:

generating an error protected data packet for transmission over the transmission path,

impairing the transmission path to a selected extent upstream of a transmission path segment that is to be tested,

transmitting the data packet over the transmission path,

receiving the data packet at the receiver, and

counting bit errors in the received data packet.

17. A method of operating a digital data distribution network having a transmitter and a receiver, wherein digital data is transmitted in error protected packets from the transmitter to the receiver over a transmission path by employing the digital data to modulate a carrier and

impressing the modulated carrier on the network, said method comprising:

(a) generating an error protected data packet for transmission over the transmission path,

(b) impairing the transmission path to a selected extent upstream of a transmission path segment that is to be tested,

(c) transmitting the data packet over the transmission path as an analog signal, and

(d) receiving the analog signal at the receiver.

18. A method according to claim 17, wherein the step of impairing the transmission path comprises impairing the transmission path by reducing its signal-to-noise ratio.

19. A method according to claim 17, wherein the step of impairing the transmission path comprises impairing the transmission path by reducing its frequency response.

20. A method according to claim 17, wherein the step of impairing the transmission path comprises impairing the transmission path by reducing its phase response.

21. A method according to claim 17, wherein the step of impairing the transmission path comprises impairing the transmission path by reducing its impulse response.

22. A method according to claim 17, wherein the step of impairing the transmission path comprises impairing the transmission path by introducing phase noise or jitter.

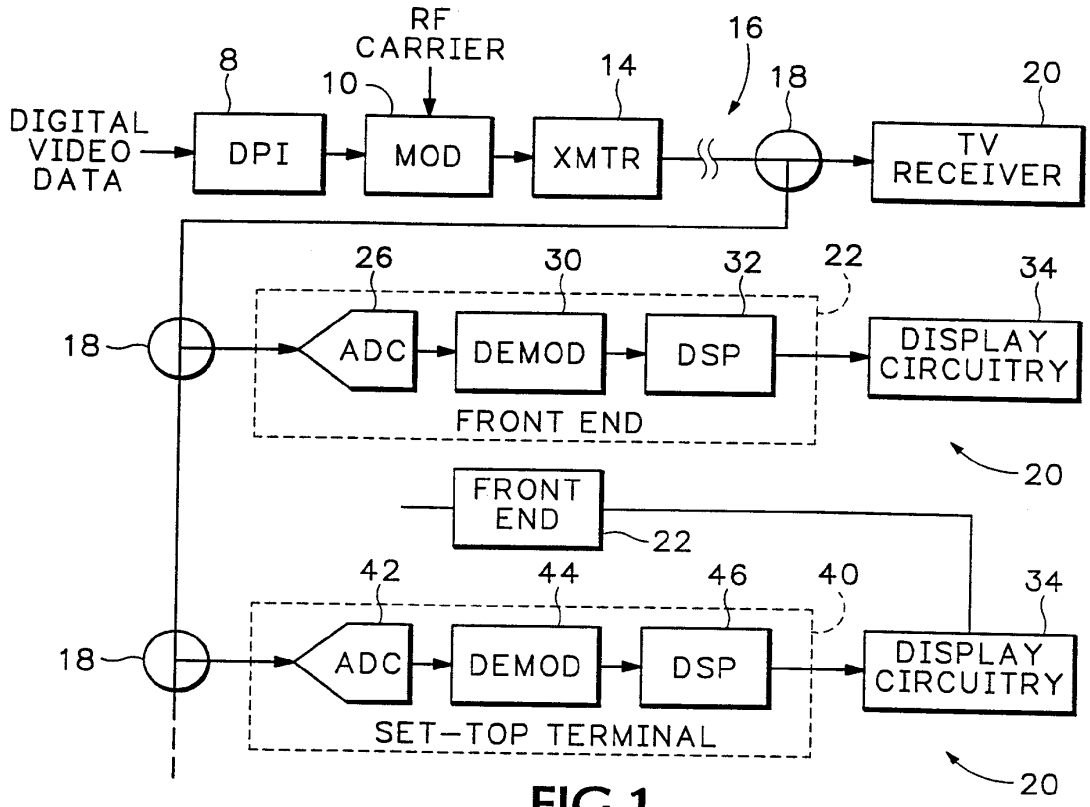
RF CARRIER
8
10
14
16
18
20
DIGITAL VIDEO DATA
DPI
MOD
XMTR
TV RECEIVER
26
30
32
22
34
18
ADC
DEMOD
DSP
DISPLAY CIRCUITRY
FRONT END
20
FRONT END
22
42
44
46
40
34
18
ADC
DEMOD
DSP
DISPLAY CIRCUITRY
SET-TOP TERMINAL
20

FIG.1

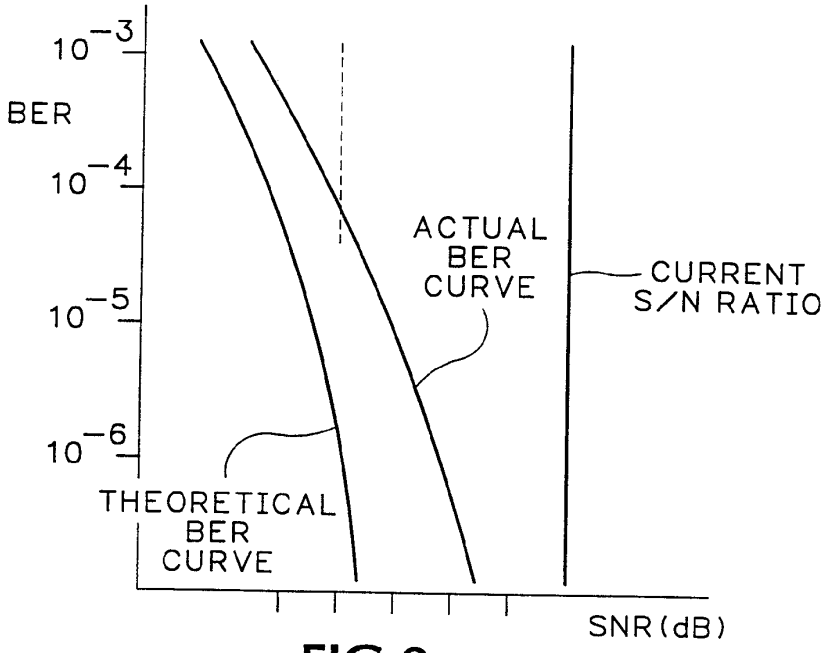
10^{-3}
BER
10^{-4}
10^{-5}
10^{-6}
ACTUAL BER CURVE
CURRENT S/N RATIO
THEORETICAL BER CURVE
SNR(dB)

FIG.2

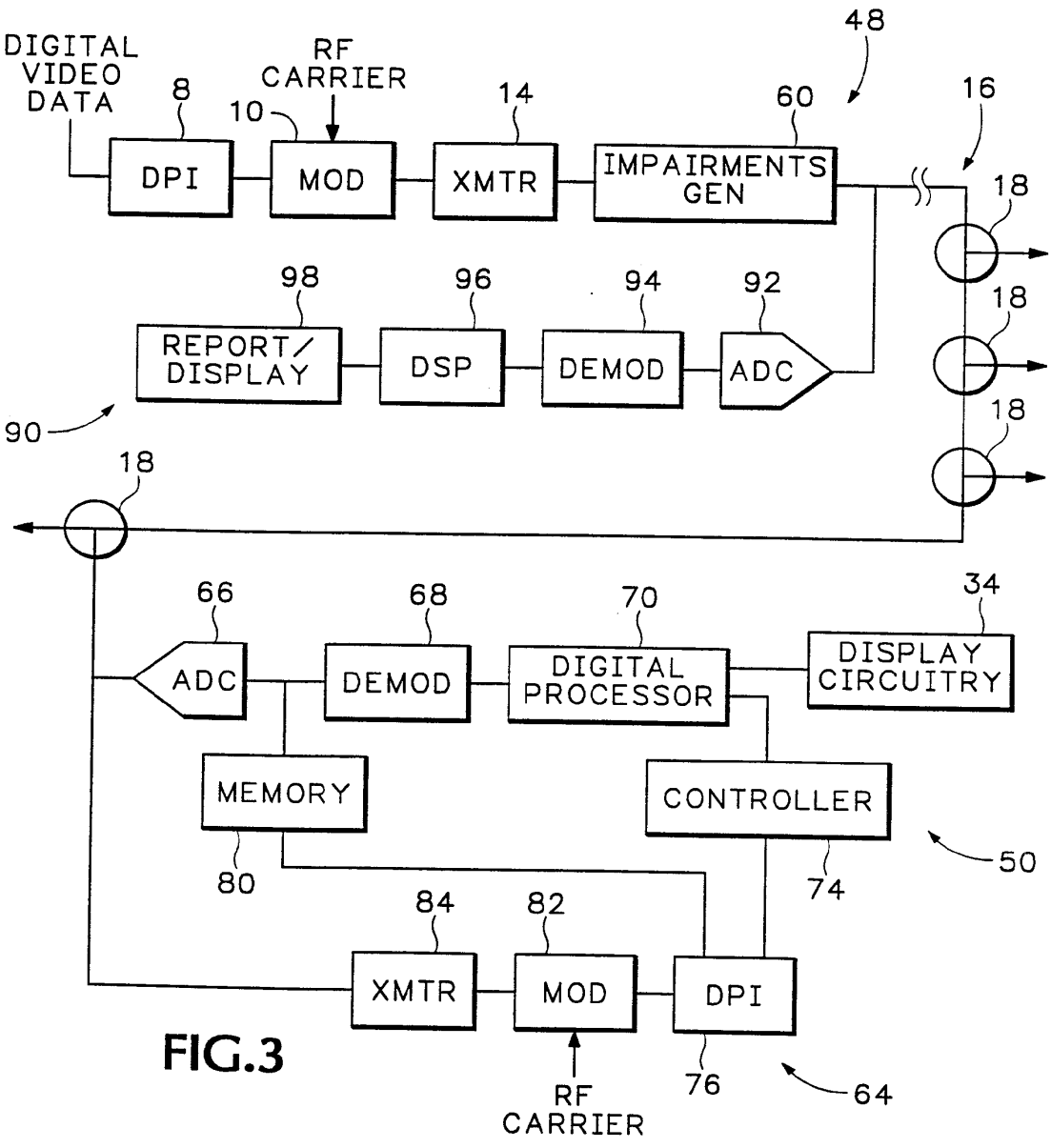
DIGITAL VIDEO DATA
8
RF CARRIER
10
14
60
48
16
DPI
MOD
XMTR
IMPAIRMENTS GEN
18
18
18
98
96
94
92
REPORT/ DISPLAY
DSP
DEMOD
ADC
90
18
66
68
70
34
ADC
DEMOD
DIGITAL PROCESSOR
DISPLAY CIRCUITRY
MEMORY
CONTROLLER
80
74
50
84
82
XMTR
MOD
DPI
RF CARRIER
76
64

FIG.3

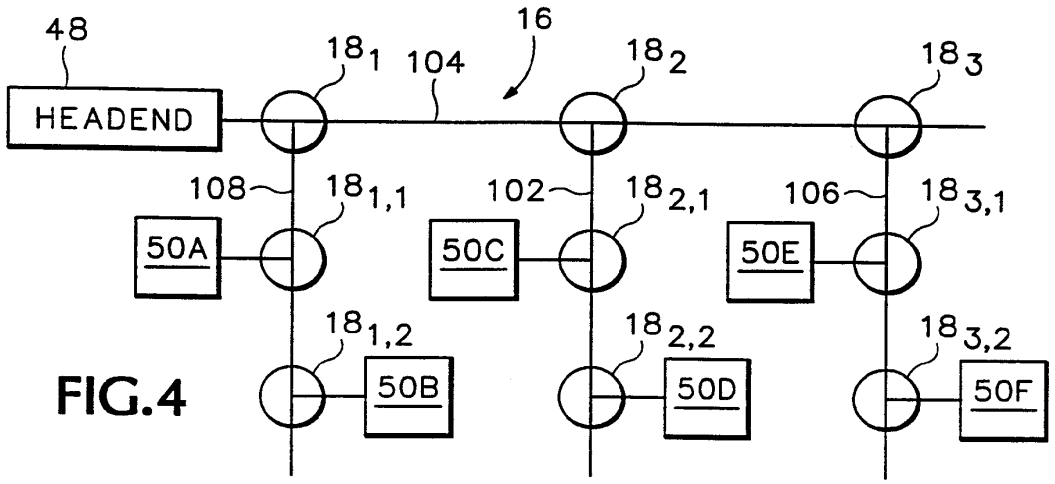
48
HEADEND
18_1
104
16
18_2
18_3
108
$18_{1,1}$
102
$18_{2,1}$
106
$18_{3,1}$
50A
50C
50E
$18_{1,2}$
$18_{2,2}$
$18_{3,2}$
50B
50D
50F

FIG.4

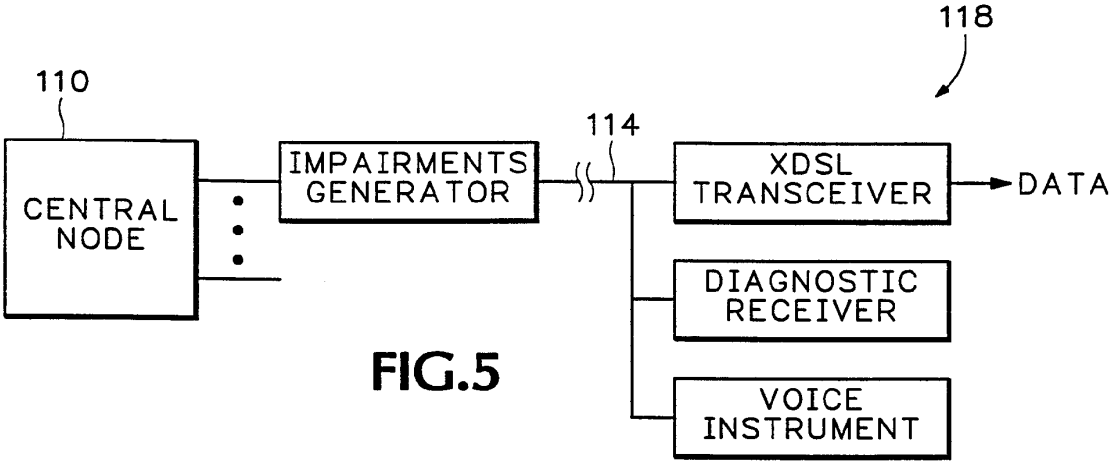
118
110
114
CENTRAL NODE
IMPAIRMENTS GENERATOR
XDSL TRANSCEIVER
DATA
DIAGNOSTIC RECEIVER
VOICE INSTRUMENT

FIG.5

PCT WORLD INTELLECTUAL PROPERTY ORGANIZATION
International Bureau

INTERNATIONAL APPLICATION PUBLISHED UNDER THE PATENT COOPERATION TREATY (PCT)

(51) International Patent Classification 6 :
G06F 9/00, H04B 3/23, 3/32

A1

(11) International Publication Number: **WO 99/63427**

(43) International Publication Date: 9 December 1999 (09.12.99)

(21) International Application Number: PCT/US99/11052

(22) International Filing Date: 19 May 1999 (19.05.99)

(30) Priority Data:
09/086,386 29 May 1998 (29.05.98) US

(71) Applicant: GTE LABORATORIES INCORPORATED [US/US]; 1209 Orange Street, Wilmington, DE 19801 (US).

(72) Inventors: EICHEN, Elliot; 41 Mary Street, Arlington, MA 02174 (US). BROOKS, David, L.; 11 Vose Hill Road, Maynard, MA 01754 (US).

(74) Agents: SUCHYTA, Leonard, Charles et al.; GTE Service Corporation, 600 Hidden Ridge, MC HQE03G13, Irving, TX 75038 (US).

(81) Designated States: AE, AL, AM, AT, AU, AZ, BA, BB, BG, BR, BY, CA, CH, CN, CU, CZ, DE, DK, EE, ES, FI, GB, GD, GE, GH, GM, HR, HU, ID, IL, IN, IS, JP, KE, KG, KP, KR, KZ, LC, LK, LR, LS, LT, LU, LV, MD, MG, MK, MN, MW, MX, NO, NZ, PL, PT, RO, RU, SD, SE, SG, SI, SK, SL, TJ, TM, TR, TT, UA, UG, UZ, VN, YU, ZA, ZW, ARIPO patent (GH, GM, KE, LS, MW, SD, SL, SZ, UG, ZW), Eurasian patent (AM, AZ, BY, KG, KZ, MD, RU, TJ, TM), European patent (AT, BE, CH, CY, DE, DK, ES, FI, FR, GB, GR, IE, IT, LU, MC, NL, PT, SE), OAPI patent (BF, BJ, CF, CG, CI, CM, GA, GN, GW, ML, MR, NE, SN, TD, TG).

Published
With international search report.

(54) Title: METHOD AND APPARATUS FOR DIGITAL SUBSCRIBER LOOP QUALIFICATION

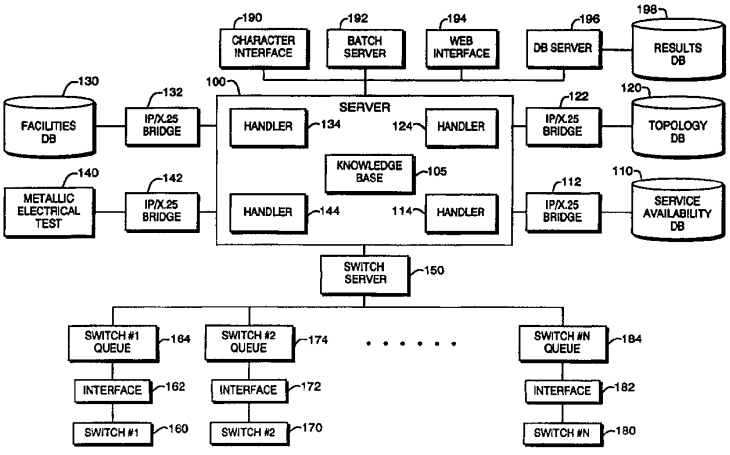

(57) Abstract

A system and methodology for qualifying a twisted pair copper loop for digital subscriber loop services are described. The system automatically queries telecommunications provider database records and/or requests measurements from network switching equipment or testing systems to obtain data regarding the twisted pair copper loop, such as loop length, electrical characteristics, and other loop topology characteristics such as wire gauge, the presence of load coils (88, 90), and the presence of bridge taps (84, 86). The system determines which digital subscriber loop services are available for the copper loop based on the combination of all data obtained. The system may be implemented in part as an expert system with a knowledge base of qualification rules used in the decision–making process.

FOR THE PURPOSES OF INFORMATION ONLY

Codes used to identify States party to the PCT on the front pages of pamphlets publishing international applications under the PCT.

AL	Albania	**ES**	Spain	**LS**	Lesotho	**SI**	Slovenia
AM	Armenia	**FI**	Finland	**LT**	Lithuania	**SK**	Slovakia
AT	Austria	**FR**	France	**LU**	Luxembourg	**SN**	Senegal
AU	Australia	**GA**	Gabon	**LV**	Latvia	**SZ**	Swaziland
AZ	Azerbaijan	**GB**	United Kingdom	**MC**	Monaco	**TD**	Chad
BA	Bosnia and Herzegovina	**GE**	Georgia	**MD**	Republic of Moldova	**TG**	Togo
BB	Barbados	**GH**	Ghana	**MG**	Madagascar	**TJ**	Tajikistan
BE	Belgium	**GN**	Guinea	**MK**	The former Yugoslav Republic of Macedonia	**TM**	Turkmenistan
BF	Burkina Faso	**GR**	Greece			**TR**	Turkey
BG	Bulgaria	**HU**	Hungary	**ML**	Mali	**TT**	Trinidad and Tobago
BJ	Benin	**IE**	Ireland	**MN**	Mongolia	**UA**	Ukraine
BR	Brazil	**IL**	Israel	**MR**	Mauritania	**UG**	Uganda
BY	Belarus	**IS**	Iceland	**MW**	Malawi	**US**	United States of America
CA	Canada	**IT**	Italy	**MX**	Mexico	**UZ**	Uzbekistan
CF	Central African Republic	**JP**	Japan	**NE**	Niger	**VN**	Viet Nam
CG	Congo	**KE**	Kenya	**NL**	Netherlands	**YU**	Yugoslavia
CH	Switzerland	**KG**	Kyrgyzstan	**NO**	Norway	**ZW**	Zimbabwe
CI	Côte d'Ivoire	**KP**	Democratic People's Republic of Korea	**NZ**	New Zealand		
CM	Cameroon			**PL**	Poland		
CN	China	**KR**	Republic of Korea	**PT**	Portugal		
CU	Cuba	**KZ**	Kazakstan	**RO**	Romania		
CZ	Czech Republic	**LC**	Saint Lucia	**RU**	Russian Federation		
DE	Germany	**LI**	Liechtenstein	**SD**	Sudan		
DK	Denmark	**LK**	Sri Lanka	**SE**	Sweden		
EE	Estonia	**LR**	Liberia	**SG**	Singapore		

METHOD AND APPARATUS FOR DIGITAL SUBSCRIBER LOOP QUALIFICATION

Technical Field

The present invention relates to digital subscriber loop technology and, more specifically, to the qualification of existing twisted pair copper loops for digital subscriber loop service.

Background Art

Digital subscriber loop technology is the digital encoding of all information transmitted on the local loop, *i.e.*, the connection between a customer's premises (home, office, etc.) and a telecommunications provider's central office serving the customer's premises. Most existing local loops in the United States and throughout the world are twisted pair copper loops, originally designed for analog service, or plain old telephone service (POTS). With digital subscriber loop technology, high speed access to the Internet, advanced telephony functions, and multimedia services is possible over the twisted pair copper access network. Digital subscriber systems can provide data from speeds of 64 kb/second in both upstream and downstream directions to over 10 Mb/second in a single direction. Digital subscriber loop technology, often referred to as "xDSL" where x stands for any of a number of letters, includes the following:

ADSL, Asymmetric Digital Subscriber Loop
VDSL, Very High-Speed Digital Subscriber Loop
HDSL, High Data Rate Digital Subscriber Loop
SDSL, Symmetric Digital Subscriber Loop
IDSL, ISDN-based Digital Subscriber Loop
RADSL, Rate Adaptive Digital Subscriber Loop
ISDN, Integrated Digital Service Network

Some of these digital subscriber loop technologies (*e.g.*, HDSL, ISDN, and in particular ADSL) have been standardized by various standards bodies with respect to modulation format, bandwidth, and embedded operations channels, while others have not been standardized and are available from different vendors in a wide

variety of modulation formats, upstream/downstream bandwidths, and operation channels.

As illustrated in Figure 1, digital subscriber loop technology consists of two terminal endpoints (TEs) 10 and 20, which provide conversion, modulation, transmission, and reception of data, and copper loop 30 connecting TEs 10 and 20. TE 10 is typically owned and operated by the service provider, while TE 20 is typically at the customer's premises. In the United States, TE 20 is typically owned or rented by the customer, while in most other parts of the world TE 20 is typically owned and operated by the service provider. In addition, the digital subscriber loop topology can include terminal equipment, such as a repeater, between the two terminal endpoints to provide additional network flexibility or to boost signal strength and transmission distances. For example, Figure 2 illustrates network terminal 70 in copper loop 60 between TEs 40 and 50.

Digital subscriber loop services, however, cannot be carried over all twisted pair copper loops that support POTS service. The various digital subscriber loop technologies have complex (real and imaginary) signal attenuation restrictions that depend upon downstream (to the customer) and upstream (from the customer) bandwidth, modulation format, and receiver sensitivity for a particular chip set used by a vendor terminal endpoint equipment. Signal attenuation itself depends on several factors, including the length and gauge of the copper wires contained in the loop, the environment in which the copper wires are placed (including temperature variations), and the quality of connections (*e.g.*, splices and terminal connections) that attach the different sections of wire contained in a given loop. Digital subscriber loop technologies also have restrictions on loop topology, such as the position and number of bridge taps and load coils, and restrictions on services provided in adjacent copper pairs in the same binder group (*i.e.*, a group of twisted pairs bundled together) because of crosstalk between pairs and overlapping frequency spectrums.

Figure 3 illustrates a typical copper loop between central office (CO) 80 and terminal endpoint 82, made up of several different lengths of wire of different gauges spliced together. One leg of the loop terminates at terminal endpoint 82,

while two other legs are unterminated, resulting in bridge taps 84 and 86. The loop in Figure 3 also includes two load coils, 88 and 90, as well as cross connect 92.

As an example of loop topology requirements, a loop is restricted to less than approximately 5.25 km of 24 gauge wire when the digital service is provided at the rate of 1.5 Mb/second downstream and 80 kb/second upstream for a commonly available chip sent that uses carrierless amplitude phase (CAP) modulation for ADSL. For this modulation format and bandwidth allocation, if there is an analog carrier POTS service in the same wire binder group, the ADSL modulation will interfere with the analog carrier, effectively destroying the POTS service. Similarly, if there is a T1 carrier system in the same wire binder group, the T1 service will interfere with the ADSL modulation, nullifying the digital subscriber service, but typically not affecting the T1 service. The number of copper pairs and the potential for crosstalk in a binder group depends on the type and manufacturer of the copper cable.

Today, when a customer wishes to order a digital subscriber loop service, the local telecommunications service provider must determine whether the customer's existing twisted pair copper loop can support the requested digital subscriber loop service at the desired bandwidth. This can be a difficult and time-consuming task to perform manually because of the many restrictions on loop topology and services just described. All necessary data may not be available to a person trying to qualify a loop for digital subscriber loop services, particularly because telecommunications providers often have data in many different databases or stored in paper records. Even if data is available, data concerning outside plant information such as loop length and topology is often out of date. Also, certain metallic loop electrical data is not stored in a database and can only be determined by a measurement or test system.

It is desirable, therefore, to provide a system and methodology for determining which digital subscriber loop technologies can be supported by a particular twisted pair copper loop. It is more desirable to qualify a copper loop for digital subscriber loop services on the basis of real-time electrical measurements as well as records stored in telecommunications provider databases. It is even more desirable to provide an automated system for digital subscriber loop qualification

that economically determines which digital subscriber loop technologies can be supported by a copper loop. It is also desirable to implement such a system as an expert system containing a knowledge base of rules.

Disclosure of Invention

The present invention satisfies those desires by providing a system and methodology for qualifying a twisted pair copper loop for digital subscriber loop services. The system automatically queries telecommunications provider database records and/or requests measurements from network switching equipment or testing systems to obtain information regarding the twisted pair copper loop in question. The system then determines which digital subscriber loop services are available for the copper loop based on the combination of all information obtained.

A method consistent with the present invention for qualifying a twisted loop pair for a digital subscriber service comprises the steps of receiving as input a unique identifier corresponding to the loop, determining a topology corresponding to the loop, and determining whether the loop meets topology restrictions of the digital subscriber service. Another method consistent with the present invention comprises the steps of receiving data corresponding to physical characteristics of the loop and applying a plurality of rules to the data to determine whether the loop is suitable for the digital subscriber service. Other methods consistent determine whether electrical characteristics of the loop meet restrictions of the digital subscriber service and whether services provided on other cable pairs in the same binder group with the loop are compatible with the digital subscriber service.

Systems are also provided for carrying out the methodologies of the present invention.

The advantages accruing to the present invention are numerous. A loop qualification system and method consistent with the present invention reduce the time for determining which digital subscriber loop services a particular copper loop supports from several hours to a few minutes. A system and method consistent with the present invention also provide a substantially more accurate result, in part because they use real-time electrical measurements to determine many topological characteristics of the copper loop.

The above desires, and other desires, features, and advantages of the present invention will be readily appreciated by one of ordinary skill in the art from the following detailed description of the preferred implementations when taken in connection with the accompanying drawings.

Brief Description of Drawings

Figure 1 illustrates digital subscriber loop technology connecting two terminal endpoints;

Figure 2 illustrates digital subscriber loop technology with network terminal equipment between two terminal endpoints;

Figure 3 illustrates a typical digital subscriber loop topology;

Figure 4 illustrates the architecture of a loop qualification system consistent with the present invention; and

Figure 5 is a flow chart of a method for qualifying loops consistent with the present invention.

Best Mode for Carrying Out the Invention

A system consistent with the present invention automatically qualifies twisted pair copper loops for digital subscriber loop services. Generally, a method for qualifying loops for digital subscriber loop services consistent with the present invention includes at least four types of qualification:

(1) Service Availability: Is the point at which the copper loop terminates equipped to provide the requested digital subscriber service?

(2) Length Qualification: Which digital subscriber loop services at which bandwidths can be provided given the length of the loop?

(3) Line Qualification: Is the loop physically suitable for use by a digital subscriber loop technology? Is the service currently provisioned on the loop compatible with digital subscriber loop service?

(4) Are the services provided on the other twisted pairs in the same binder group with the loop spectrally compatible with digital subscriber loop services?

In order to answer these loop qualification questions, a system consistent with the present invention combines results obtained from testing the copper loop, results from queries of telecommunications provider database records, and

information regarding the transmission and receiver characteristics of the digital subscriber.

Figure 4 illustrates the architecture of a system for qualifying loops consistent with the present invention, which may be implemented, for example, as an expert system using a conventional client-server architecture known in the art. The expert system is implemented in software residing on server 100 and performs loop qualification by combining input from a number of information sources with rules contained in knowledge base 105. Specifically, server 100 obtains information from service availability database 110, topology database 120, facilities database 130, and metallic electrical test system 140. Databases 110, 120, and 130, and test system 140 are typically owned and operated by the local telecommunications provider. It will be recognized by one skilled in the art that each database shown in Figure 4 may actually consist of several smaller databases or, alternatively, that databases may be combined, since each telecommunications provider organizes its data into databases in different ways. Server 100 interfaces to the databases and test system via a suitable communications protocol such as IP or X.25, provided by interfaces 112, 122, 132, and 142. Server 100 additionally includes software handler modules for receiving and processing information obtained from databases 110, 120, and 130, and test system 140.

Server 100 also receives information and test results directly from central office switches in the local network, three of which are shown in Figure 4 as switches 160, 170, and 180 for illustrative purposes. Server 100 is coupled to switch server 150, which is coupled to switch queues 164, 174, and 184, corresponding to switches 160, 170, and 180, respectively. Switch queues 164, 174, and 184 access data from switches 160, 170, and 180 via interfaces 162, 172, and 182, respectively. It will be recognized by one skilled in the art that switch server 150 need not be separate from server 100.

Consistent with the present invention, a user may access server 100 through either the graphical user interface of client 194, *e.g.*, a World Wide Web-based client, or character interface 190, *e.g.*, a VT100 character interface. Regardless of the interface used, a user will typically enter a unique number (*e.g.*, a telephone directory number (TDN) or an IP address) or identifier (*e.g.*, a circuit identifier)

associated with the copper loop for which qualification is desired. A system consistent with the present invention also includes batch server 192, which allows qualification of numerous loops to be performed in batch, and database server 196 for storing results in results database 198.

Figure 5 is a flow chart illustrating a method for qualifying loops for digital subscriber loop services consistent with the present invention. Consistent with an embodiment of the present invention, the method is performed by software residing on server 100. The process begins by receiving as input a unique identifier corresponding to the copper loop to be qualified for digital subscriber services (step 200). The unique identifier may be a telephone directory number (TDN) as shown in Figure 5, or any other unique identifier such as an IP address or a circuit identifier. Also, server 100 may receive the identifier from any input source, including character interface 190 or web interface 194 (if a human user is accessing the system through an interface) and batch server 192 (if several qualification requests have been entered for batch processing). Most of the remaining steps in the process use the unique loop identifier to retrieve information regarding the loop.

Once receiving a loop identifier, the qualification process continues by determining whether digital subscriber loop services are available for the loop (step 210). Consistent with the present invention, the server makes this determination by querying service availability database 110 to determine whether the local telecommunications provider provides xDSL services from the office serving the customer's location. If xDSL service is not available, loop qualification terminates. If xDSL service is available, processing continues to step 220. In an alternate method consistent with the present invention, the server may choose to continue the loop qualification process although xDSL service is not available.

Next, the process determines whether the loop is on a working pair (step 220) by querying facilities database 130. Some measurement tests performed by a loop qualification method consistent with the present invention require that the loop be on a working pair. If the loop is not on a working pair, the server either terminates loop qualification (as shown in Figure 5) or chooses to continue loop qualification, although not all tests will be available for the loop. Alternatively, the

loop may be temporarily assigned to line equipment and a test number so that loop qualification may be performed.

If loop qualification continues, the server determines whether the current service on the loop is compatible with xDSL service (step 230). For example, in the United States the current service cannot be T1 or ISDN. Consistent with the present invention, the server performs this step by querying facilities database 130. As discussed above, it should be apparent to one skilled in the art that, although the queries in steps 220 and 230 both access databases with information regarding facilities, the facilities database shown in Figure 4 (database 130) may consist of several smaller databases, so that the queries of steps 220 and 230 access two different, smaller databases. If the current service is not compatible, loop qualification ends. If the current service is compatible, then flow proceeds to several data collection steps. In an alternate method consistent with the present invention, the server may choose to continue the loop qualification process although the current service is not compatible with xDSL service.

A method consistent with the present invention performs some or all of data collection steps 240, 250, 260, and 270. These steps are not necessarily performed in a particular order, and some steps may be performed simultaneously. For example, Figure 5 shows steps 240 and 250 being performed at the same time as steps 260 and 270. Each of these steps involves obtaining information about the loop to be qualified from a database or a test or measurement system in the network, and all of the information obtained is used as input to step 280, which applies a plurality of rules to the information to model the response of the network and determine which digital subscriber services are available on the loop.

In step 240, the server queries topology database 120 using the unique loop identifier (*e.g.*, TDN or IP address) to obtain a variety of loop topology data. In particular, the server requests length and gauge of wire on the loop for each loop segment, cable type, the location of load coils on the loop, and the location and length of bridge taps on the loop. For example, the loop topology shown in Figure 3 is an example of data that may be obtained from topology database 120. As described above, topology database 120 may consist of several smaller databases, each of which contains different information. Step 240 may also include a query of

a separate database (not shown in Figure 4) that stores recent measurements of the loop length. This data may be more accurate than a topology database operated by the telecommunications provider for storing many different types of loop topology data.

Referring again to Figure 5, in step 250 the server queries facilities database 130 using the unique loop identifier to determine the services on other cable pairs in the same binder group as the loop to be qualified. This information will be used in step 280 to determine whether xDSL services are spectrally compatible with the services on the other cable pairs in the binder so that crosstalk will not degrade service quality.

In step 260, the server requests measurements from metallic electrical test system 140, which is a remote test system such as 4TEL, manufactured by Teradyne, Inc., or Mechanized Loop Test (MLT), manufactured by Lucent Technologies. Consistent with the present invention, the server requests a measure of loop length and/or loop capacitance, which can be converted to loop length using a known mathematical relationship. The server also requests measures of longitudinal balance and wideband and narrowband electrical ingress which will be used in step 280 to determine the suitability of the loop for digital subscriber loop services. As described earlier, tests in step 260 may not be performed if the loop is not on a working pair.

In step 270, the server requests a load coil detection measurement to determine if there are any load coils in the loop. This measurement can be performed at the end office switch at which the loop terminates (*e.g.*, switch 160, 170, or 180 in Figure 4) or by metallic electrical test system 140. If the server obtains the measurement from the switch, switch server 150 receives measurements from queues 164, 174, and 184, and controls server 100's access to switch measurements. Examples of load coil detection measurements known in the art are a swept frequency measurement and a time domain reflectometry measurement. As descirbed earlier, tests in step 270 may not be performed if the loop is not on a working pair.

All of the information obtained in steps 240, 250, 260, and 270 from database queries and test and measurement systems is input to step 280. Consistent

with the present invention, in step 280 an expert system resident on server 100 combines the results of steps 240, 250, 260, and 270 with a plurality of qualification rules from knowledge base 105 and information on network equipment stored in a database (not shown for the sake of clarity) to model the response of the network for the various digital subscriber loop services available to the subscriber. The expert system also determines, for each of the available digital subscriber loop services (*e.g.*, ADSL, VDSL, etc.), how much bandwidth can be supported in both upstream and downstream directions.

Consistent with the present invention, the qualification rules in knowledge base 105 are not limited to any particular set. The rules may range from the simple (*e.g.*, a loop with one or more load coils does not qualify for a digital subscriber loop service) to the more complex (*e.g.*, for a certain type of terminal equipment and a particular digital subscriber loop service with given upstream and downstream bandwidth, a combination of wire length and gauge limits can be calculated according to mathematical relationships to satisfy given signal attenuation and/or bit error rate requirements).

Consistent with the present invention, there may be a conflict between data retrieved from a database and data measured in real-time using a measurement system or test system. In such cases, knowledge base 105 can also include rules for reconciling the differences. For example, if data retrieved from a database is known not to have been updated recently, then a qualification method consistent with the present invention would rely on measured data, which may be more accurate.

The ultimate output of a system consistent with the present invention is a list of digital subscriber loop service packages that the loop can support. For a particular type of xDSL service (*e.g.*, ADSL), there may be multiple packages, each of which defines a different class of service, including upstream and downstream bandwidth. For example, a loop may be able to support an ADSL package with downstream/upstream bit rates of 640k/272k, but the same loop may not support ADSL with bit rates of 640k/680k because of the loop length and topology. Alternatively, a system consistent with the present invention may determine whether a loop can support a specified digital subscriber loop service with given upstream and downstream bandwidths. In this case, the system user may enter the service

type and bandwidth desired. In addition to simply listing qualified services, the system may provide the user with diagnostic information explaining why a particular decision was reached.

It will be apparent to those skilled in this art that various modifications and variations can be made to the loop qualification scheme of the present invention without departing from the spirit and scope of the invention. Other embodiments of the invention will be apparent to those skilled in this art from consideration of the specification and practice of the invention disclosed herein. In particular, the method is not limited to implementation in a client/server architecture or as an expert system. Nor is the invention limited to the user interfaces described. For example, a machine application program interface can provide access to the system from another system or as part of a larger provisioning system. A method consistent with the present invention can also be used to qualify loops for other services whose qualification requires access to database and/or real-time measurements. It is intended that the specification and examples be considered exemplary only, with the true scope and spirit of the invention being indicated by the following claims.

Claims

1. A method for qualifying a twisted pair loop for a digital subscriber service having loop topology restrictions, the method comprising the steps of:

receiving a unique identifier corresponding to the loop;

identifying a topology corresponding to the identified loop; and

determining whether the identified loop meets the loop topology restrictions of the digital subscriber service based on the identified topology.

2. The method of claim 1 further including the step of computing a bandwidth that can be supported on the loop in response to the topology.

3. The method of claim 1 wherein the identifying step includes the substeps of determining a length corresponding to the loop and determining a gauge corresponding to the loop.

4. The method of claim 3 wherein the substep of determining a length includes the substeps of requesting a capacitance measurement of the loop from a metallic electrical testing system and converting the capacitance measurement into the length.

5. The method of claim 3 wherein the substep of determining a length includes the substep of requesting a length measurement from a metallic electrical testing system.

6. The method of claim 3 wherein the substep of determining a length includes the substep of querying a database containing a recent length measurement of the loop.

7. The method of claim 3 wherein the substep of determining a length includes the substep of querying a database containing a known length of the loop.

8. The method of claim 3 wherein the substep of determining a gauge includes the substep of querying a topology database containing the gauge of the loop.

9. The method of claim 1 wherein the loop contains a plurality of loop segments, and wherein the identifying step includes the substeps of determining a length corresponding to each of the plurality of loop and segments and determining a gauge corresponding to each of the plurality of loop segments.

10. The method of claim 9 wherein the substep of determining a length includes the substep of querying a database containing the length of each of the plurality of loop segments.

11. The method of claim 9 wherein the substep of determining a gauge includes the substep of querying a database containing the gauge of each of the plurality of loop segments.

12. The method of claim 1 wherein the identifying step includes the substep of querying a database for the position of a bridge tap in the loop.

13. The method of claim 1 wherein the identifying step includes the substep of querying a database for the length of a bridge tap in the loop.

14. The method of claim 1 wherein the identifying step includes the substep of querying a database for the number of bridge taps in the loop.

15. The method of claim 1 wherein the identifying step includes the substep of querying a database for the position of a load coil in the loop.

16. The method of claim 1 wherein the identifying step includes the substep of querying a database for the number of load coils in the loop.

17. The method of claim 1 wherein the identifying step includes the substeps of requesting a load coil measurement of the loop from a test system at a switch connected to the loop.

18. The method of claim 17 wherein the load coil measurement is a swept frequency measurement.

19. The method of claim 17 wherein the load coil measurement is a time domain reflectometry measurement.

20. A method for qualifying a twisted pair loop for a digital subscriber service, the method comprising the steps of:

receiving a unique identifier corresponding to the loop;

identifying a first cable pair and a binder corresponding to the identified loop having the first cable pair corresponding to the identified loop and a second cable pair; and

determining whether services provided on the second cable pair are compatible with the digital subscriber service.

21. The method of claim 20 wherein the identifying step includes the substep of querying a database correlating the binder to the first and second cable pairs and services provided on the cable pairs, and wherein the determining step includes the substep of querying the database.

22. A method for qualifying a twisted pair loop for a digital subscriber service, the method comprising the steps of:

receiving a unique identifier corresponding to the loop;

identifying a current service on the identified loop; and

determining whether the current service is compatible with the digital subscriber service.

23. The method of claim 22 wherein the identifying step includes the substep of querying a database correlating the identifier to the current service on the loop.

24. The method of claim 22 further comprising the step of determining whether the identifier corresponds to a working loop.

25. A method for qualifying a twisted pair loop for a digital subscriber service having longitudinal balance restrictions, the method comprising the steps of:

receiving a unique identifier corresponding to the loop;

requesting a longitudinal balance measurement of the identified loop from a metallic electrical testing system; and

determining whether the measurement meets the restrictions.

26. A method for qualifying a twisted pair loop for a digital subscriber service having electrical ingress restrictions, the method comprising the steps of:

receiving a unique identifier corresponding to the loop;

requesting an electrical ingress measurement of the identified loop from a metallic electrical testing system; and

determining whether the measurement meets the restrictions.

27. A method for qualifying a twisted pair loop for a digital subscriber service, the method comprising the steps of:

receiving data corresponding to physical characteristics of the loop; and

applying a plurality of qualification rules to the data to determine whether the loop is suitable for the digital subscriber service.

28. The method of claim 27 wherein the receiving step includes the substep of receiving data from a metallic loop electrical test system.

29. The method of claim 27 wherein the receiving step includes the substep of receiving data from a database.

30. The method of claim 27 wherein the receiving step includes the substep of receiving data from a switch connected to the loop.

31. The method of claim 27 wherein the applying step is performed by an expert system.

32. A method for qualifying a twisted pair loop for a telecommunications service, the method comprising the steps of:

receiving data corresponding to physical characteristics of the loop; and

applying a plurality of qualification rules to the data to determine whether the loop is suitable for the telecommunications service.

33. The method of claim 32 wherein the applying step is performed by an expert system.

34. A system for qualifying a twisted pair loop for a digital subscriber service having loop topology restrictions, the system comprising:

an interface for receiving a unique identifier corresponding to the loop;

means for identifying a topology corresponding to the identified loop; and

means for determining whether the identified loop meets the topology restrictions of the digital subscriber service based on the identified topology.

35. The system of claim 34 wherein the identifying means includes means for querying a database.

36. The system of claim 34 wherein the identifying means includes means for requesting a measurement from a test system.

37. A system for qualifying a twisted pair loop for a digital subscriber service comprising:

means for receiving data corresponding to physical characteristics of the loop; and

means for applying a plurality of qualification rules to the data to determine whether the loop is suitable for the digital subscriber service.

38. The system of claim 37 further wherein the means for applying includes an expert system, the expert system including a knowledge base containing the plurality of qualification rules.

39. A system for qualifying a twisted pair loop for a digital subscriber service having loop topology restrictions, said system comprising:

an interface for receiving a unique identifier corresponding to the loop;

a memory comprising a loop qualification program for identifying a topology corresponding to the identified loop, and for determining whether the identified loop meets the loop topology restrictions; and

a processor for running the loop qualification program.

40. A system for qualifying a twisted pair loop for a digital subscriber service comprising:

an interface for receiving data corresponding to physical characteristics of the loop;

a memory comprising a knowledge base containing a plurality of rules, and a loop qualification program for applying the plurality of rules; and

a processor for running the loop qualification program.

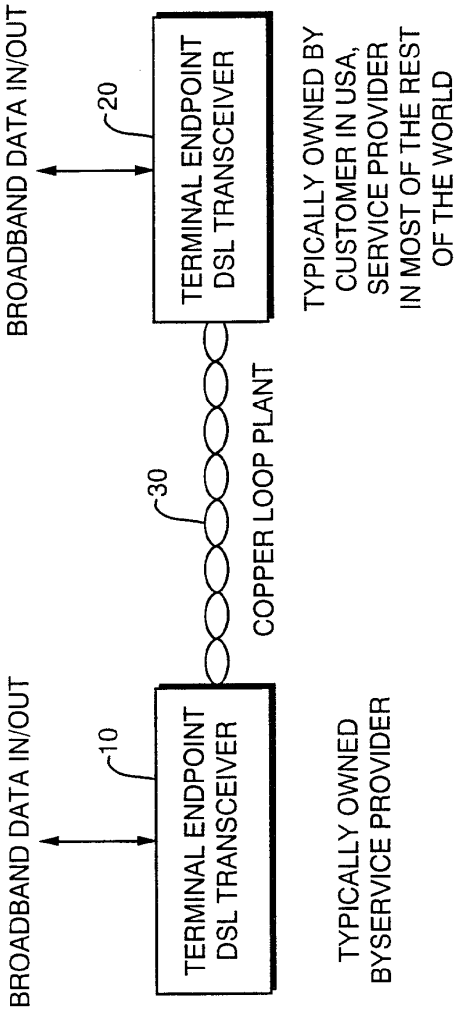
BROADBAND DATA IN/OUT
10
TERMINAL ENDPOINT DSL TRANSCEIVER
TYPICALLY OWNED BYSERVICE PROVIDER
30
COPPER LOOP PLANT
BROADBAND DATA IN/OUT
20
TERMINAL ENDPOINT DSL TRANSCEIVER
TYPICALLY OWNED BY CUSTOMER IN USA, SERVICE PROVIDER IN MOST OF THE REST OF THE WORLD

FIG. 1

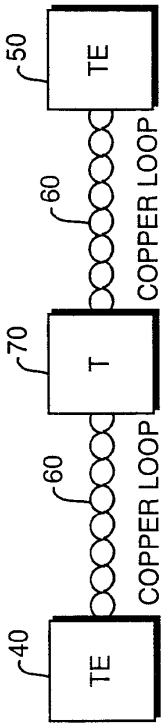
40
TE
60
COPPER LOOP
70
T
60
COPPER LOOP
50
TE

FIG. 2

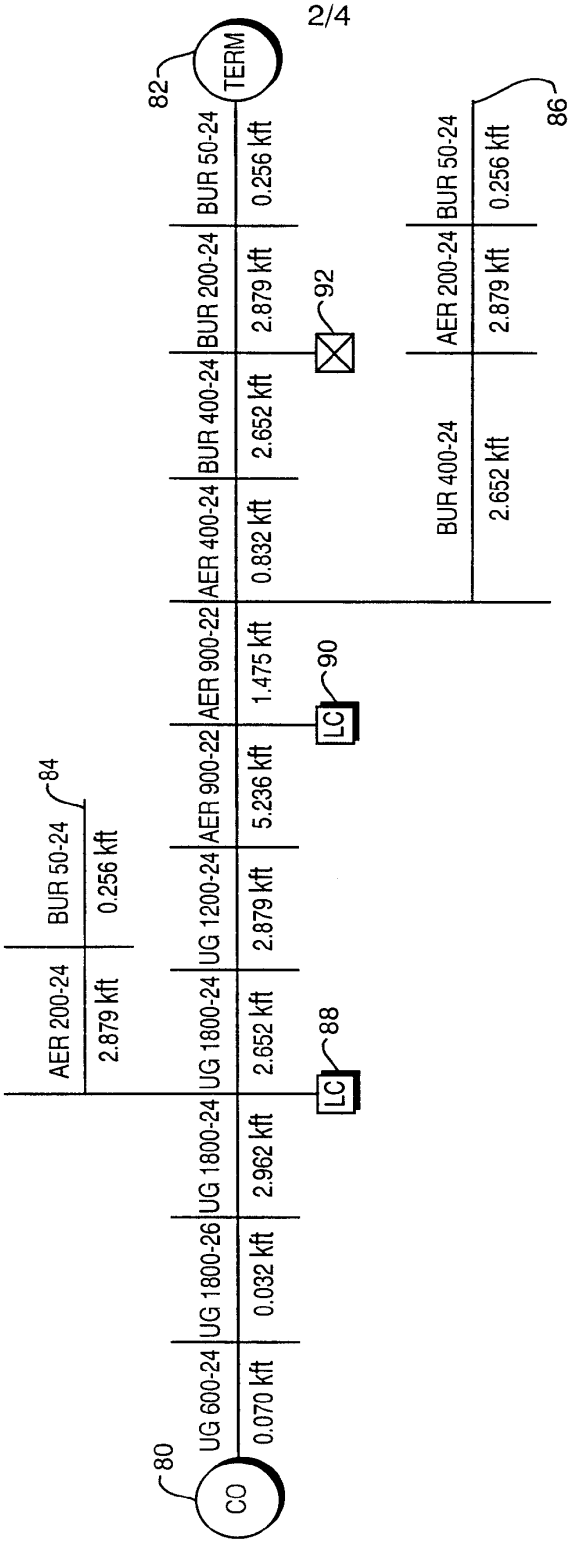
80
CO
UG 600-24
0.070 kft
UG 1800-26
0.032 kft
UG 1800-24
2.962 kft
UG 1800-24
2.652 kft
88
LC
UG 1200-24
2.879 kft
AER 900-22
5.236 kft
AER 900-22
1.475 kft
90
LC
AER 400-24
0.832 kft
BUR 400-24
2.652 kft
BUR 400-24
2.652 kft
BUR 200-24
2.879 kft
92
AER 200-24
2.879 kft
BUR 50-24
0.256 kft
82
TERM
AER 200-24
2.879 kft
BUR 50-24
0.256 kft
84
BUR 50-24
0.256 kft
86

FIG. 3

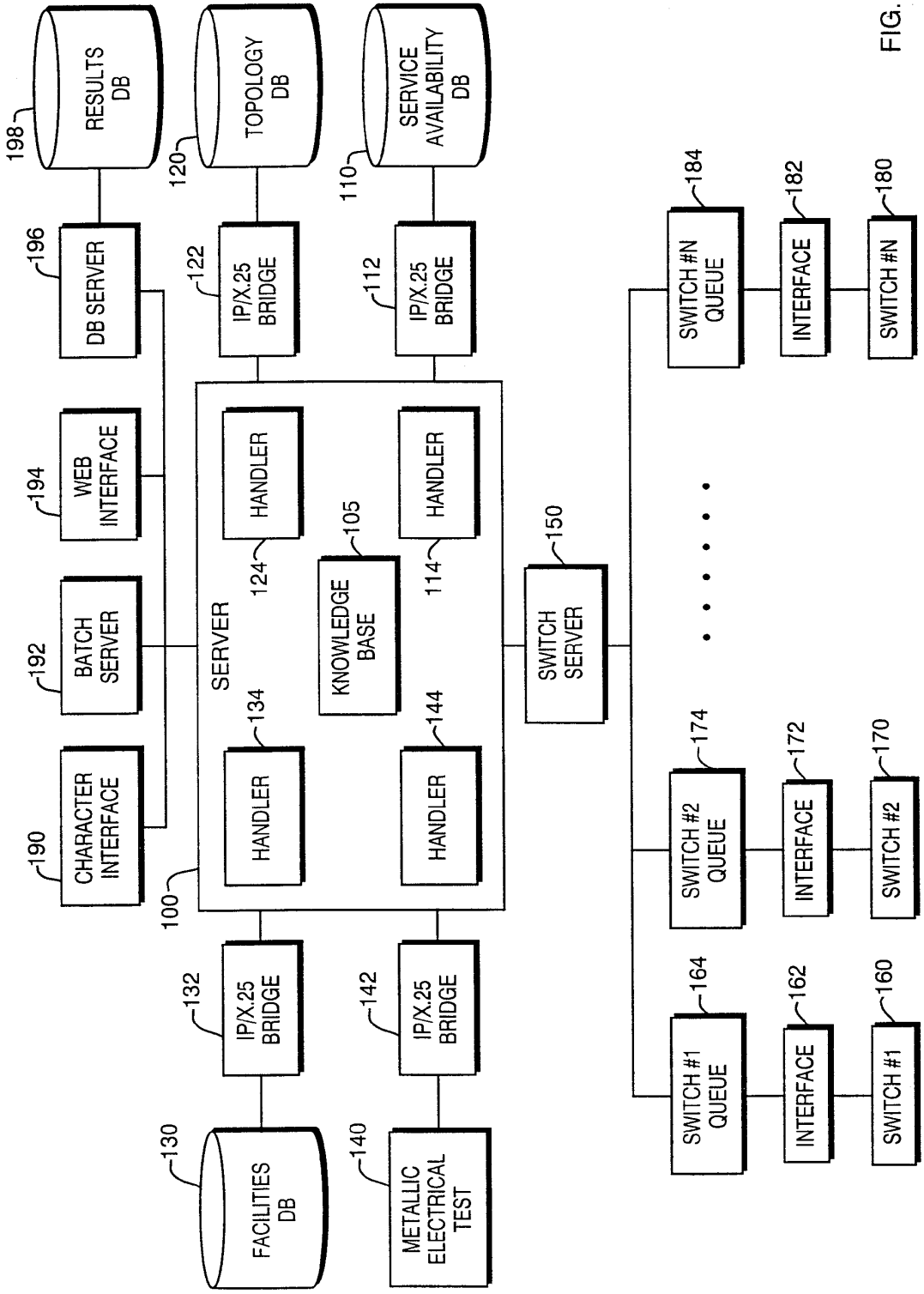
RESULTS DB
198
TOPOLOGY DB
120
SERVICE AVAILABILITY DB
110
DB SERVER
196
IP/X.25 BRIDGE
122
IP/X.25 BRIDGE
112
WEB INTERFACE
194
HANDLER
124
HANDLER
114
BATCH SERVER
192
SERVER
KNOWLEDGE BASE
105
SWITCH SERVER
150
CHARACTER INTERFACE
190
HANDLER
134
HANDLER
144
100
SWITCH #N QUEUE
184
INTERFACE
182
SWITCH #N
180
SWITCH #2 QUEUE
174
INTERFACE
172
SWITCH #2
170
IP/X.25 BRIDGE
132
IP/X.25 BRIDGE
142
SWITCH #1 QUEUE
164
INTERFACE
162
SWITCH #1
160
FACILITIES DB
130
METALLIC ELECTRICAL TEST
140

FIG. 4

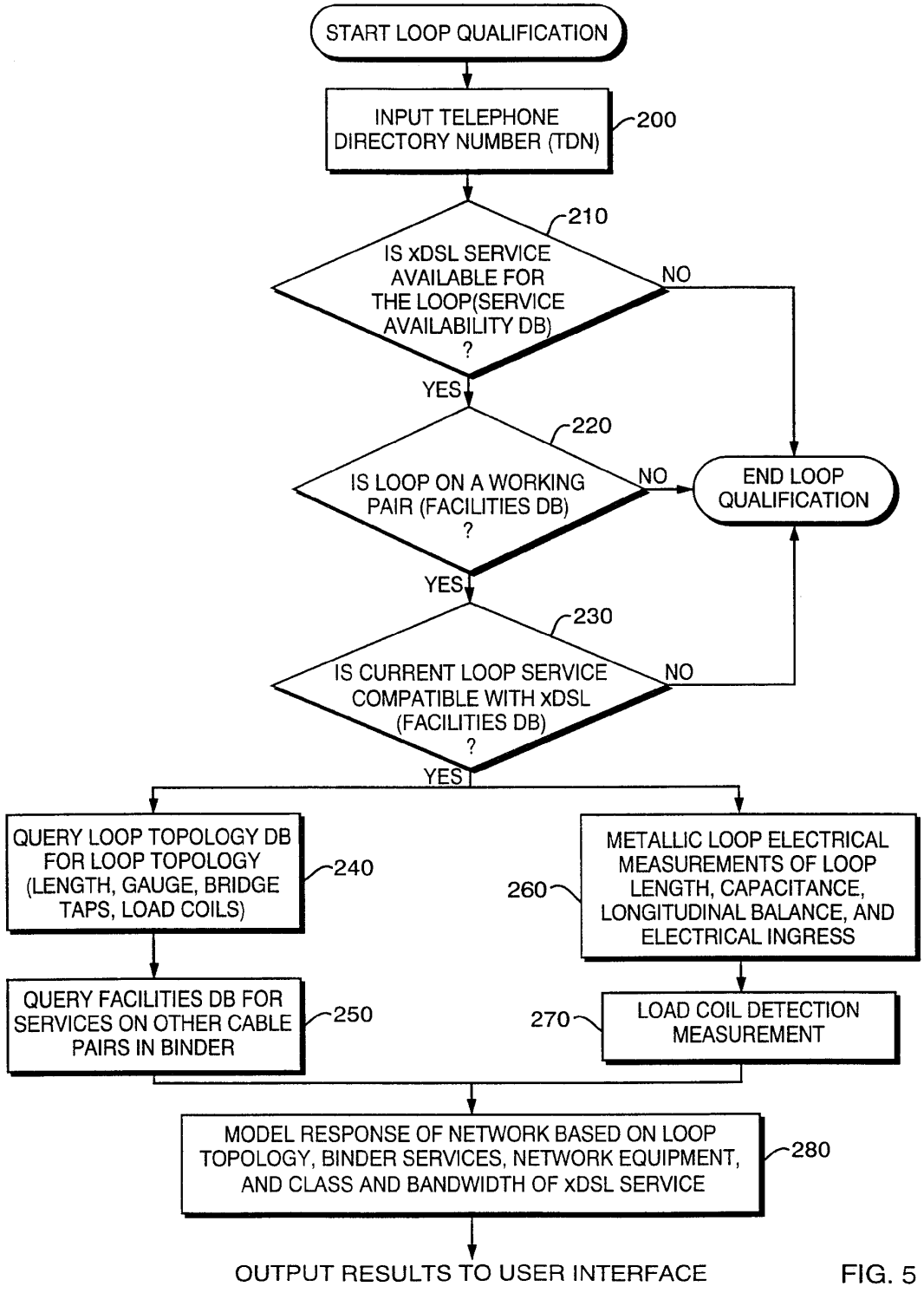
START LOOP QUALIFICATION
INPUT TELEPHONE DIRECTORY NUMBER (TDN)
200
210
IS xDSL SERVICE AVAILABLE FOR THE LOOP(SERVICE AVAILABILITY DB) ?
NO
YES
220
IS LOOP ON A WORKING PAIR (FACILITIES DB) ?
NO
END LOOP QUALIFICATION
YES
230
IS CURRENT LOOP SERVICE COMPATIBLE WITH xDSL (FACILITIES DB) ?
NO
YES
QUERY LOOP TOPOLOGY DB FOR LOOP TOPOLOGY (LENGTH, GAUGE, BRIDGE TAPS, LOAD COILS)
240
QUERY FACILITIES DB FOR SERVICES ON OTHER CABLE PAIRS IN BINDER
250
260
METALLIC LOOP ELECTRICAL MEASUREMENTS OF LOOP LENGTH, CAPACITANCE, LONGITUDINAL BALANCE, AND ELECTRICAL INGRESS
270
LOAD COIL DETECTION MEASUREMENT
MODEL RESPONSE OF NETWORK BASED ON LOOP TOPOLOGY, BINDER SERVICES, NETWORK EQUIPMENT, AND CLASS AND BANDWIDTH OF xDSL SERVICE
280
OUTPUT RESULTS TO USER INTERFACE

FIG. 5

INTERNATIONAL SEARCH REPORT

International application No.
PCT/US99/11052

A. CLASSIFICATION OF SUBJECT MATTER

IPC(6) :G06F 9/00; H04B 3/23, 3/32
US CL :702/57; 370/286, 294, 401; 375/296, 346, 349; 364/141

According to International Patent Classification (IPC) or to both national classification and IPC

B. FIELDS SEARCHED

Minimum documentation searched (classification system followed by classification symbols)

U.S. : 702/57; 370/286, 294, 401; 375/296, 346, 349; 364/141

Documentation searched other than minimum documentation to the extent that such documents are included in the fields searched

Electronic data base consulted during the international search (name of data base and, where practicable, search terms used)

APS

C. DOCUMENTS CONSIDERED TO BE RELEVANT

Category*	Citation of document, with indication, where appropriate, of the relevant passages	Relevant to claim No.
A	US 5,181,198 A (LECHLEIDER) 19 January, 1993 (19.01.93), Abstract, figs.1-7, cols.1-3.	1-40
A	US 5,504,896 (SCHELL et al.) 02 April, 1996 (02.04.96), Abstract, figs.1-10, cols.1-2.	1-40

☐ Further documents are listed in the continuation of Box C. ☐ See patent family annex.

*	Special categories of cited documents:	"T"	later document published after the international filing date or priority date and not in conflict with the application but cited to understand the principle or theory underlying the invention
"A"	document defining the general state of the art which is not considered to be of particular relevance	"X"	document of particular relevance; the claimed invention cannot be considered novel or cannot be considered to involve an inventive step when the document is taken alone
"E"	earlier document published on or after the international filing date	"Y"	document of particular relevance; the claimed invention cannot be considered to involve an inventive step when the document is combined with one or more other such documents, such combination being obvious to a person skilled in the art
"L"	document which may throw doubts on priority claim(s) or which is cited to establish the publication date of another citation or other special reason (as specified)	"&"	document member of the same patent family
"O"	document referring to an oral disclosure, use, exhibition or other means		
"P"	document published prior to the international filing date but later than the priority date claimed		

Date of the actual completion of the international search	Date of mailing of the international search report
05 JULY 1999	27 JUL 1999
Name and mailing address of the ISA/US Commissioner of Patents and Trademarks Box PCT Washington, D.C. 20231 Facsimile No. (703) 305-3230	Authorized officer HIEN VO Telephone No. (703) 308-5253

Form PCT/ISA/210 (second sheet)(July 1992)*

(12) INTERNATIONAL APPLICATION PUBLISHED UNDER THE PATENT COOPERATION TREATY (PCT)

(19) World Intellectual Property Organization
International Bureau

(43) International Publication Date
19 July 2001 (19.07.2001)

PCT

(10) International Publication Number
WO 01/52516 A3

(51) International Patent Classification[7]: H04L 1/24

(21) International Application Number: PCT/US01/00418

(22) International Filing Date: 8 January 2001 (08.01.2001)

(25) Filing Language: English

(26) Publication Language: English

(30) Priority Data:
60/174,865 7 January 2000 (07.01.2000) US
60/224,308 10 August 2000 (10.08.2000) US

(71) Applicant: AWARE, INC. [US/US]; 40 Middlesex Turnpike, Bedford, MA 01730-1432 (US).

(72) Inventors: KRINSKY, David, M.; 4 Ayer Road, Acton, MA 01720 (US). PIZZANO, Robert, Edmund, Jr.; 5 Bow Street Court, Stoneham, MA 02180 (US).

(74) Agent: VICK, Jason, H.; Nixon Peabody LLP, Suite 800, 8180 Greensboro Drive, McLean, VA 22102 (US).

(81) Designated States *(national)*: AE, AG, AL, AM, AT, AU, AZ, BA, BB, BG, BR, BY, BZ, CA, CH, CN, CR, CU, CZ, DE, DK, DM, DZ, EE, ES, FI, GB, GD, GE, GH, GM, HR, HU, ID, IL, IN, IS, JP, KE, KG, KP, KR, KZ, LC, LK, LR, LS, LT, LU, LV, MA, MD, MG, MK, MN, MW, MX, MZ, NO, NZ, PL, PT, RO, RU, SD, SE, SG, SI, SK, SL, TJ, TM, TR, TT, TZ, UA, UG, UZ, VN, YU, ZA, ZW.

(84) Designated States *(regional)*: ARIPO patent (GH, GM, KE, LS, MW, MZ, SD, SL, SZ, TZ, UG, ZW), Eurasian patent (AM, AZ, BY, KG, KZ, MD, RU, TJ, TM), European patent (AT, BE, CH, CY, DE, DK, ES, FI, FR, GB, GR, IE, IT, LU, MC, NL, PT, SE, TR), OAPI patent (BF, BJ, CF, CG, CI, CM, GA, GN, GW, ML, MR, NE, SN, TD, TG).

Published:
— *with international search report*

(88) Date of publication of the international search report:
13 December 2001

For two-letter codes and other abbreviations, refer to the "Guidance Notes on Codes and Abbreviations" appearing at the beginning of each regular issue of the PCT Gazette.

(54) Title: DIAGNOSTIC METHODS AND SYSTEMS FOR MULTICARRIER MODEMS

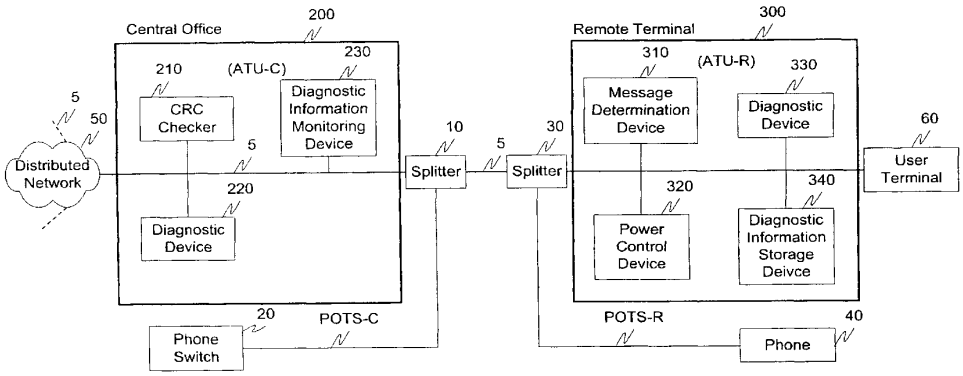

(57) Abstract: Upon detection of a trigger, such as the exceeding of an error threshold or the direction of a user, a diagnostic link system enters a diagnostic information transmission mode. This diagnostic information transmission mode allows for two modems to exchange diagnostic and/or test information that may not otherwise be exchangeable during normal communication. The diagnostic information transmission mode is initiated by transmitting an initiate diagnostic link mode message to a receiving modem accompanied by a cyclic redundancy check (CRC). The receiving modem determines, based on the CRC, if a robust communications channel is present. If a robust communications channel is present, the two modems can initiate exchange of the diagnostic and/or test information. Otherwise, the transmission power of the transmitting modem is increased and the initiate diagnostic link mode message re-transmitted to the receiving modem until the CRC is determined to be correct.

WO 01/52516 A3

INTERNATIONAL SEARCH REPORT

International Application No
PCT/US 01/00418

A. CLASSIFICATION OF SUBJECT MATTER
IPC 7 H04L1/24

According to International Patent Classification (IPC) or to both national classification and IPC

B. FIELDS SEARCHED

Minimum documentation searched (classification system followed by classification symbols)
IPC 7 H04L

Documentation searched other than minimum documentation to the extent that such documents are included in the fields searched

Electronic data base consulted during the international search (name of data base and, where practical, search terms used)
EPO-Internal, WPI Data, PAJ, INSPEC, COMPENDEX

C. DOCUMENTS CONSIDERED TO BE RELEVANT

Category °	Citation of document, with indication, where appropriate, of the relevant passages	Relevant to claim No.
X	WO 99 26375 A (TEKTRONIX INC ;HAKANSON ERIC W (US)) 27 May 1999 (1999-05-27)	1,3-5, 7-11, 13-15, 17-20, 35,38, 39,41,42
	abstract page 4, line 19 - line 27	
Y	page 6, line 25 - line 26	2,6,12, 16, 21-23, 25-31, 33,34, 36,37, 40,43
	page 9, line 37 -page 10, line 7 page 11, line 4 - line 15 page 13, line 24 - line 30	

	-/--	

[X] Further documents are listed in the continuation of box C.

[X] Patent family members are listed in annex.

° Special categories of cited documents :

"A" document defining the general state of the art which is not considered to be of particular relevance

"E" earlier document but published on or after the international filing date

"L" document which may throw doubts on priority claim(s) or which is cited to establish the publication date of another citation or other special reason (as specified)

"O" document referring to an oral disclosure, use, exhibition or other means

"P" document published prior to the international filing date but later than the priority date claimed

"T" later document published after the international filing date or priority date and not in conflict with the application but cited to understand the principle or theory underlying the invention

"X" document of particular relevance; the claimed invention cannot be considered novel or cannot be considered to involve an inventive step when the document is taken alone

"Y" document of particular relevance; the claimed invention cannot be considered to involve an inventive step when the document is combined with one or more other such documents, such combination being obvious to a person skilled in the art.

"&" document member of the same patent family

Date of the actual completion of the international search	Date of mailing of the international search report
21 June 2001	16/07/2001

Name and mailing address of the ISA	Authorized officer
European Patent Office, P.B. 5818 Patentlaan 2 NL - 2280 HV Rijswijk Tel. (+31-70) 340-2040, Tx. 31 651 epo nl. Fax: (+31-70) 340-3016	Papantoniou, A

1

Form PCT/ISA/210 (second sheet) (July 1992)

INTERNATIONAL SEARCH REPORT

International Application No
PCT/US 01/00418

C.(Continuation) DOCUMENTS CONSIDERED TO BE RELEVANT

Category °	Citation of document, with indication,where appropriate, of the relevant passages	Relevant to claim No.
Y	GB 2 303 032 A (SAMSUNG ELECTRONICS CO LTD) 5 February 1997 (1997-02-05) abstract page 2, line 23 - line 25 page 5, line 15 -page 6, line 2	2,12, 21-23, 25-31, 33,34, 36,37, 40,43
Y	WO 97 01900 A (ERICSSON AUSTRIA AG ;PFIEFFER JOHANN (AT)) 16 January 1997 (1997-01-16)	6,16
A	page 3, paragraph 2 page 4, paragraph 5 page 5, paragraph 3 page 7, paragraph 3	24,32
A	LEWIS L ET AL: "EXTENDING TROUBLE TICKET SYSTEM TO FAULT DIAGNOSITICS" IEEE NETWORK,IEEE INC. NEW YORK,US, 1 November 1993 (1993-11-01), pages 44-51, XP000575228 ISSN: 0890-8044 page 44, left-hand column, paragraph 3 page 44, left-hand column, paragraph 5 figure 1	1,11,21, 29, 35-38,41

1

Form PCT/ISA/210 (continuation of second sheet) (July 1992)

INTERNATIONAL SEARCH REPORT

Information on patent family members

International Application No
PCT/US 01/00418

Patent document cited in search report	Publication date	Patent family member(s)	Publication date
WO 9926375 A	27-05-1999	EP 0966808 A	29-12-1999
GB 2303032 A	05-02-1997	FR 2736229 A	03-01-1997
		IL 118723 A	28-10-1999
		JP 2891673 B	17-05-1999
		JP 9051328 A	18-02-1997
		US 5903608 A	11-05-1999
WO 9701900 A	16-01-1997	AT 406533 B	26-06-2000
		AT 108795 A	15-10-1999
		AU 707189 B	08-07-1999
		AU 5991096 A	30-01-1997
		CA 2225754 A	16-01-1997
		EP 0843927 A	27-05-1998
		IL 122331 A	13-08-2000
		JP 11508425 T	21-07-1999

Form PCT/ISA/210 (patent family annex) (July 1992)

81513-8

PATENT COOPERATION TREATY

From the
INTERNATIONAL PRELIMINARY EXAMINING AUTHORITY

PCT

RECEIVED
JAN 24 2002
NIXON PEABODY

WRITTEN OPINION
(PCT Rule 66)

To:
Vick, Jason H.
Nixon Peabody LLP
8180 Greensboro Drive,Suite 800
McLean,Virginia 22102
ETATS-UNIS D'AMERIQUE

Date of mailing *(day/month/year)*	18/01/2002
Applicant's or agent's file reference: 081513.4	**REPLY DUE** within 1 / 00 months/days from the above date of mailing

International application No.	International filing date *(day/month/year)*	Priority date *(day/month/year)*
PCT/US 01/00418	08/01/2001	07/01/2000

International Patent Classification (IPC) or both national classification and IPC
H04L1/24

Applicant
AWARE, INC.

1. This written opinion is the first drawn up by this International Preliminary Examining Authority.
2. This opinion contains indications relating to the following items:
   - I [X] Basis of the opinion
   - II [ ] Priority
   - III [X] Non-establishment of opinion with regard to novelty, inventive step and industrial applicability
   - IV [ ] Lack of unity of invention
   - V [X] Reasoned statement under Rule 66.2(a)(ii) with regard to novelty, inventive step or industrial applicability; citations and explanations supporting such statement
   - VI [ ] Certain documents cited
   - VII [ ] Certain defects in the international application
   - VIII [ ] Certain observations on the international application
3. The applicant is hereby **invited to reply** to this opinion.
   - **When?** See the time limit indicated above. The applicant may, before the expiration of that time limit, request this Authority to grant an extension, see Rule 66.2(d).
   - **How?** By submitting a written reply, accompanied, where appropriate, by amendments, according to Rule 66.3. For the form and the language of the amendments, see Rules 66.8 and 66.9.
   - **Also** For an additional opportunity to submit amendments, see Rule 66.4. For the examiner's obligation to consider amendments and/or arguments, see Rule 66.4*bis*. For an informal communication with the examiner, see Rule 66.6.

   If no reply is filed, the international preliminary examination report will be established on the basis of this opinion.
4. The final date by which the international preliminary examination report must be established according to Rule 69.2 is: 07/05/2002

Name and mailing address of the IPEA/
European Patent Office
D-80298 Munich
Tel. (+49-89) 2399-0, Tx: 523656 epmu d
Fax: (+49-89) 2399-4465

Authorized officer
Examiner
Formalities officer
(incl. extension of time limits)
Tel. (+49-89) 2399 2828

EUROPÄISCHES PATENTAMT - EUROPEAN PATENT OFFICE - OFFICE EUROPÉEN DES BREVETS

Form PCT/IPEA/408 (cover sheet) (July 1998)

DOCKETED
1/24/02 By pm
Nixon Peabody, LLP

I. Basis of the opinion

1. The basis of this written opinion is the application as originally filed.

III. Non-establishment of opinion with regard to novelty, inventive step and industrial applicability

2. The question of whether the claimed invention appears to be novel, to involve an inventive step, or to be industrially applicable has not been and will not be the subject of the international preliminary examination (Article 34 (4) (a) (i) (ii) PCT; see also international search report) in respect of:

2.1 Applications having an unnecessary plurality of independent claims (generally not more than 1 independent claim in the same category is necessary; Article 6 PCT);

2.2 unsearched subject-matter (Article 17 (2) (a), Rule 66.1 (e) PCT), e.g.

2.2.1 claimed subject-matter under Rule 39.1 PCT,

2.2.2 applications where the description, the claims, or the drawings fail to comply with the prescribed requirements to such an extent that no meaningful search could have been carried out;

2.3 claimed subject-matter under Rule 67.1 PCT.

V. Reasoned statement under Rule 66.2(a)(ii) with regard to novelty, inventive step or industrial applicability

3. To the extent that the international preliminary examination has been carried out (see item III above), the following is pointed out:

in light of the documents cited in the international search report, it is considered that the invention as claimed in at least one of the independant claims does not appear to meet the criteria mentioned in Article 33 (1) PCT, i.e. does not appear to be novel and/or to involve an inventive step.

4. If amendments are filed, the Applicant must comply with the requirements of Rule 66.8 PCT and indicate the basis in the originally filed application of the amendments made (Article 34 (2) (b) PCT) otherwise these amendments will not be taken into consideration for the establishment of international preliminary examination.
The attention of the applicant is drawn to the fact that if the application contains an unjustified plurality of independent claims no examination of any of the claims will be carried out.

PATENT COOPERATION TREATY

PCT

REC'D 15 MAR 2002
PCT

INTERNATIONAL PRELIMINARY EXAMINATION REPORT

(PCT Article 36 and Rule 70)

7

Applicant's or agent's file reference	FOR FURTHER ACTION	See Notification of Transmittal of International Preliminary Examination Report (Form PCT/IPEA/416)
081513.4		
International application No.	International filing date *(day/month/year)*	Priority date *(day/month/year)*
PCT/US 01/ 00418	08/01/2001	07/01/2000
International Patent Classification (IPC) or national classification and IPC		
H04L1/24		
Applicant		
AWARE, INC.		

1. This international preliminary examination report has been prepared by this International Preliminary Examining Authority and is transmitted to the applicant according to Article 36.

2. This REPORT consists of a total of 2 sheets, including this cover sheet.

   ☐ This report is also accompanied by ANNEXES, i.e., sheets of the description, claims and/or drawings which have been amended and are the basis for this report and/or sheets containing rectifications made before this Authority (see Rule 70.16 and Section 607 of the Administrative Instructions under the PCT).

   These annexes consists of a total of _____ sheets.

3. This report contains indications relating to the following items:

   I ☒ Basis of the report

   II ☐ Priority

   III ☒ Non-establishment of opinion with regard to novelty, inventive step and industrial applicability

   IV ☐ Lack of unity of invention

   V ☒ Reasoned statement under Article 35(2) with regard to novelty, inventive step or industrial applicability; citations and explanations supporting such statement

   VI ☐ Certain documents cited

   VII ☐ Certain defects in the international application

   VIII ☐ Certain observations on the international application

Date of submission of the demand	Date of completion of this report
02/08/2001	09/03/2002
Name and mailing address of the IPEA/	Authorized officer
European Patent Office D-80298 Munich Tel. (+49-89) 2399-0, Tx: 523656 epmu d Fax: (+49-89) 2399-4465	VAN DEN BERG J G J Tel. (+49-89) 2399 2828

Form PCT/IPEA/409 (cover sheet) (July 1998)

I. Basis of the report

1. The basis of this international preliminary examination report is the application as originally filed.

III. Non-establishment of opinion with regard to novelty, inventive step and industrial applicability

2. The question of whether the claimed invention appears to be novel, to involve an inventive step, or to be industrially applicable has not been and will not be the subject of the international preliminary examination (Article 34 (4) (a) (i) (ii) PCT; see also international search report) in respect of:

2.1 Applications having an unnecessary plurality of independent claims (generally not more than 1 independent claim in the same category is necessary; Article 6 PCT);

2.2 unsearched subject-matter (Article 17 (2) (a), Rule 66.1 (e) PCT), e.g.

2.2.1 claimed subject-matter under Rule 39.1 PCT,

2.2.2 applications where the description, the claims, or the drawings fail to comply with the prescribed requirements to such an extent that no meaningful search could have been carried out;

2.3 claimed subject-matter under Rule 67.1 PCT.

V. Reasoned statement under Article 35(2) with regard to novelty, inventive step or industrial applicability; citations and explanations supporting such statement

3. To the extent that the international preliminary examination has been carried out (see item III above), the following is pointed out:

In light of the documents cited in the international search report, the invention as claimed in at least one of the independant claims does not appear to meet the criteria mentioned in Article 33 (1) PCT, i.e. does not appear to be novel and/or to involve an inventive step.

INTERNATIONAL SEARCH REPORT

Internatior No
PCT/US 01/41653

A. CLASSIFICATION OF SUBJECT MATTER
IPC 7 H04B3/46 H04L27/26

According to International Patent Classification (IPC) or to both national classification and IPC

B. FIELDS SEARCHED

Minimum documentation searched (classification system followed by classification symbols)
IPC 7 H04L H04B

Documentation searched other than minimum documentation to the extent that such documents are included in the fields searched

Electronic data base consulted during the international search (name of data base and, where practical, search terms used)
EPO-Internal, WPI Data, PAJ, INSPEC

C. DOCUMENTS CONSIDERED TO BE RELEVANT

Category °	Citation of document, with indication, where appropriate, of the relevant passages	Relevant to claim No.
X	US 6 075 821 A (CHEN CHUNTA ET AL) 13 June 2000 (2000-06-13) abstract column 6, line 24 - line 29 column 11, line 4 - line 14 claim 1	1,2
A	---	3-57
A	WO 99 63427 A (GTE LABORATORIES INC) 9 December 1999 (1999-12-09) the whole document	1-57

A	EP 0 889 615 A (INTEGRATED TELECOM EXPRESS) 7 January 1999 (1999-01-07) abstract page 4, line 12 - line 13 page 4, line 53 -page 5, line 3 claims 40-53	1-57

	-/--	

[X] Further documents are listed in the continuation of box C.

[X] Patent family members are listed in annex.

° Special categories of cited documents :

"A" document defining the general state of the art which is not considered to be of particular relevance

"E" earlier document but published on or after the international filing date

"L" document which may throw doubts on priority claim(s) or which is cited to establish the publication date of another citation or other special reason (as specified)

"O" document referring to an oral disclosure, use, exhibition or other means

"P" document published prior to the international filing date but later than the priority date claimed

"T" later document published after the international filing date or priority date and not in conflict with the application but cited to understand the principle or theory underlying the invention

"X" document of particular relevance; the claimed invention cannot be considered novel or cannot be considered to involve an inventive step when the document is taken alone

"Y" document of particular relevance; the claimed invention cannot be considered to involve an inventive step when the document is combined with one or more other such documents, such combination being obvious to a person skilled in the art.

"&" document member of the same patent family

Date of the actual completion of the international search	Date of mailing of the international search report
26 September 2002	09/10/2002

Name and mailing address of the ISA	Authorized officer
European Patent Office, P.B. 5818 Patentlaan 2 NL - 2280 HV Rijswijk Tel. (+31-70) 340-2040, Tx. 31 651 epo nl, Fax: (+31-70) 340-3016	Reilly, D

Form PCT/ISA/210 (second sheet) (July 1992)

INTERNATIONAL SEARCH REPORT

Internatic ication No
PCT/US 01/41653

C.(Continuation) DOCUMENTS CONSIDERED TO BE RELEVANT

Category °	Citation of document, with indication,where appropriate, of the relevant passages	Relevant to claim No.
A	US 5 128 619 A (BJORK ROGER A ET AL) 7 July 1992 (1992-07-07) the whole document	1-57

Form PCT/ISA/210 (continuation of second sheet) (July 1992)

INTERNATIONAL SEARCH REPORT

Internation ication No
PCT/US 01/41653

Patent document cited in search report		Publication date	Patent family member(s)		Publication date
US 6075821	A	13-06-2000	NONE		
WO 9963427	A	09-12-1999	US	6292539 B1	18-09-2001
			AU	4087599 A	20-12-1999
			EP	1093609 A1	25-04-2001
			WO	9963427 A1	09-12-1999
EP 0889615	A	07-01-1999	US	6252900 B1	26-06-2001
			EP	0889615 A2	07-01-1999
			JP	11088920 A	30-03-1999
			US	6088385 A	11-07-2000
			US	2001007574 A1	12-07-2001
			US	6442195 B1	27-08-2002
US 5128619	A	07-07-1992	EP	0391312 A2	10-10-1990
			JP	2292919 A	04-12-1990

Form PCT/ISA/210 (patent family annex) (July 1992)

(19)日本国特許庁（ＪＰ）　(12)**特　許　公　報**（Ｂ２）　(11)特許出願公告番号

特公平6－3956

(24)(44)公告日　平成６年(1994)１月12日

(51)Int.Cl.[5]	識別記号	庁内整理番号	ＦＩ	技術表示箇所
Ｈ０４Ｍ　11/00	３０２	8627－5K		
Ｈ０４Ｂ　3/04	Ａ	8226－5K		
Ｈ０４Ｌ　1/00	Ｅ	6942－5K		
12/02				
		8529－5K	Ｈ０４Ｌ　11/ 02	Ｄ

発明の数１(全 15 頁)

(21)出願番号　特願昭61－502770

(86)(22)出願日　昭和61年(1986)５月５日

(86)国際出願番号　ＰＣＴ／ＵＳ８６／００９８３

(87)国際公開番号　ＷＯ８６／０７２２３

(87)国際公開日　昭和61年(1986)12月４日

(65)公表番号　特表昭62－502932

(43)公表日　昭和62年(1987)11月19日

(31)優先権主張番号　７３６２００

(32)優先日　1985年５月20日

(33)優先権主張国　米国（ＵＳ）

(71)出願人　999999999
テレビツト　コーポレイシヨン
アメリカ合衆国　95014　カリフォルニア　クパーティノ　バブロード　10440

(72)発明者　ヒューハートッグス　ダーク
アメリカ合衆国　95037　カリフォルニア　モーガンヒル　ローリングヒルス　ドライブ　2220

(74)代理人　弁理士　鈴木　弘男

審査官　松野　高尚

(54)【発明の名称】　不完全な送信媒体のための総体的なモデム構造体

1

【特許請求の範囲】

【請求項１】各搬送波が複雑さ、即ち１回の変調で送信するビット数の変化するデータエレメントをエンコードした搬送波の集合でデータエレメントをエンコードする形式の、電話線を介してデータを送信する高速モデムにおける搬送波周波数にデータ及び電力を割り当てるシステムにおいて、

上記搬送波周波数の集合に含まれた各々の搬送波周波数に対して等化ノイズ成分を決定する手段と、

各搬送波におけるデータエレメントの複雑さ、即ち１回の変調で送信するビット数を、ＯとＮとの間の整数をｎとすれば、ｎ個の情報単位から（ｎ＋１）個の情報単位まで増加するに要する余分な電力を決定する手段と、

上記搬送波周波数の集合に含まれたすべての搬送波の余分な電力を次第に電力が増加する順に順序付けする手段

2

と、

この順序付けされた余分な電力に次第に電力が増加する順序で利用可能な電力を割り当てる手段と、

利用可能な電力が尽きる点の値ＭＰ（ｍａｘ）を決定する手段と、

割り当てられる電力がその搬送波に対する上記ＭＰ（ｍａｘ）に等しくなり且つ割り当てられるデータ単位の数が上記ＭＰ（ｍａｘ）に等しいか又はそれより小さい当該搬送波のための余分な電力の数に等しくなるように各搬送波周波数に電力及びデータを割り当てる手段とを具備したことを特徴とするシステム。

【請求項２】上記の順序付け手段は、

任意の余分な電力レベルのテーブルを形成する手段と、

各々の決定された余分な電力レベルの値を上記任意の余分な電力レベルのテーブルの値の１つへと丸めて計算の

煩雑さを減少させる手段とを具備する特許請求の範囲第１項に記載のシステム。

【請求項３】モデムＡ及びＢが電話線によって接続され、等化ノイズを決定する上記の手段は、

上記モデムＡとＢとの間に通信リンクを確立する手段と、

上記モデムＡ及びＢにおける非送信時間インターバル中にラインノイズデータを累積する手段と、

第１の周波数搬送波の集合を上記モデムＡからＢへと送信する手段とを具備し、各搬送波の振幅は所定の値を有するものであり、

更に、上記第１の周波数搬送波の集合をモデムＢで受信する手段と、

モデムＢで受信した各搬送波の振幅を測定する手段と、

モデムＢで測定した振幅を上記所定の振幅と比較して、各搬送波周波数における信号ロス（ｄＢ）を決定する手段と、

上記累積したノイズの各搬送波周波数における成分の値（ｄＢ）を決定する手段と、

各搬送波周波数における信号ロスを各搬送波周波数におけるノイズ成分に加算して等化ノイズを決定する手段とを具備する特許請求の範囲第２項に記載のシステム。

【発明の詳細な説明】

発明の背景

技術分野

本発明は、一般に、データ通信の分野に関するもので、より詳細には、高速モデムに関する。

従来技術

最近、デジタルデータを直接送信するための特殊設計の電話線が導入されている。しかしながら、膨大な量の電話線はアナログの音声周波数（ＶＦ）信号を搬送するように設計されている。モデムは、ＶＦ搬送波信号を変調してデジタル情報をＶＦ搬送波信号にエンコードしそしてこれらの信号を復調してこの信号によって保持されたデジタル情報をデコードするのに用いられている。

既存のＶＦ電話線は、モデムの性能を低下すると共に、所望のエラー率以下でデータを送信することのできる速度を制限するような多数の制約がある。これらの制約には、周波数に依存するノイズがＶＦ電話線に存在することや、ＶＦ電話線によって周波数に依存する位相遅延が挿入されることや、周波数に依存する信号ロスがあることが含まれる。

一般に、ＶＦ電話線の使用可能な帯域は、ゼロより若干上から約４KHzまでである。電話線ノイズの電力スペクトルは、周波数にわたって均一に分布されず、一般的に不定なものである。従って、これまで、ＶＦ電話線の使用可能な帯域にわたるノイズスペクトルの分布を測定する方法は皆無である。

更に、周波数に依存する伝播遅延がＶＦ電話線によって誘起される。従って、複雑な多周波数信号の場合は、ＶＦ電話線により信号の種々の成分間に位相遅延が誘起される。この位相遅延も不定なものであり、送信が行なわれる特定の時間に個々のＶＦ電話線について測定しなければならない。

更に、ＶＦ電話線の信号ロスは周波数と共に変化する。等価ノイズは、各搬送波周波数に対して信号ロス成分に追加されるノイズスペクトル成分であり、両成分は、デシベル（ｄＢ）で測定される。

一般に、公知のモデムは、満足なエラー率を得るようにデータ速度をダウン方向にシフトすることによって等価ラインノイズ及び信号ロスを補償している。例えば、バラン(Baran)氏の米国特許第４４３８５１１号には、ガンダルフ・データ・インク(Gandalf Data Inc.,)によって製造されたＳＭ９６００スーパー・モデムと称する高速モデムが開示されている。ノイズ障害がある場合、このＳＭ９６００は、その送信データ速度を４８００bps又は２４００bpsに「ギヤシフト」即ち低下させる。バラン氏の特許に開示されたシステムは、６４の直角変調された搬送波によってデータを送信する。バラン氏のシステムは、ライン上の大きなノイズ成分の周波数と同じ周波数を有する搬送波の送信を終らせることにより、ＶＦライン上のノイズの周波数依存性を補償するものである。従って、バラン氏のシステムは、ＶＦラインノイズスペクトルの最高点の搬送波周波数で送信を終らせることによりそのスループットを僅かに低下させる。バラン氏のシステムは、本質的に、ＶＦラインノイズスペクトルの分布に基づいて各搬送波信号のゴー／ノー・ゴー判断を行なう。本発明は、バラン氏によって開始された努力を引き継ぐものである。

殆どの公知のシステムは、ＶＦラインによって誘起される周波数依存性の位相遅延を等化システムによって補償するものである。最も大きな位相遅延は、使用可能な帯域の端付近の周波数成分において誘起される。従って、帯域の中心付近の周波数成分は、帯域の外側の周波数成分を捕獲できるように遅延される。等化を行なう場合には、一般に、上記の遅延を実行するための追加回路が必要とされる。

ＶＦ電話線を介しての両方向送信に関連した更に別の問題は、出ていく信号と入ってくる信号とで干渉を生じるおそれがあることである。一般に、２つの信号の分離及びアイソレーションは、次の３つの方法の１つで行なわれる。

（ａ）別々の信号に対して別々の周波数を使用する周波数マルチプレクシング。この方法は、モデムをベースとする遠隔通信システムに通常用いられるものである。

（ｂ）別々の信号に対して別々の時間セグメントを使用する時間マルチプレクシング。この方法は、送信器がこれに含まれた全てのデータを送信した後にのみチャンネルを放棄する半二重システムにおいてしばしば使用される。

5

（ｃ）直交コードを用いて信号を送信するコードマルチプレクシング。

上記の全てのシステムでは、利用できるスペースが、最初のシステム設計中に固定された一定の割合に基づいて分割される。しかしながら、これらの一定の割合は、各モデムに生じる実際のトラフィックロード（通信負荷）問題に適したものではない。例えば、離れたホストコンピュータに接続されたＰＣワークステーションにいる事務員は、１０又は２０個の文字をタイプし、その応答として全スクリーンを受け取る。この場合、送信側モデムと受信側モデムとの間にチャンネルを等しく割り当てる一定の割合では、ＰＣワークステーションの事務員にチャンネルを相当過剰に割り当てることになる。従って、実際のトラフィックロード状態の必要性に応じてチャンネル容量を割り当てるモデムがあれば、チャンネル容量の効率的な利用が著しく促進される。

発明の要旨

本発明は、ダイヤル式のＶＦ電話線に使用する高速モデムに関する。このモデムは、多搬送波変調機構を使用しており、全データ送信率を最大にするようにデータ及び電力を種々の搬送波に可変に割り当てる。搬送波間での電力の割当は、割り当てる全電力が指定の限界を越えてはならないという制約を受ける。

好ましい実施例では、上記モデムは、更に、通信リンクの制御権を実際のユーザ要求に応じて２つのモデム（Ａ及びＢ）間で分担させる可変割当システムを備えている。

本発明の別の特徴は、周波数に依存する位相遅延を補償すると共に記号間の干渉を防止するシステムであって、等化ネットワークを必要としないようなシステムにある。

本発明の１つの特徴によれば、直角振幅変調（ＱＡＭ）を用いて色々な複雑さ、即ち１回の変調で送信するビット数のデータエレメントが各搬送波にエンコードされる。各搬送波周波数における等価ノイズ成分は、２つのモデム（ＡとＢ）との間の通信リンクを経て測定される。

良く知られているように、ビットエラー率（ＢＥＲ）を指定レベル以下に維持すべき場合には、所与の搬送波周波数における所与の複雑さのデータエレメントを送信するに要する電力を、その周波数の等価ノイズ成分が増加した時に、増加しなければならない。同様に、データの複雑さ、即ち１回の変調で送信するビット数を増加するためには、信号対雑音比、即ち、Ｓ／Ｎ比を増加しなければならない。

本発明の一実施例においては、外的なＢＥＲ及び全利用電力の制約内で全データ率を最大にするようにデータ及び電力が割り当てられる。電力割当システムは、各搬送波における記号率をｎからｎ＋１までの情報単位で増加するために余分な所要電力を計算する。次いで、システムは、記号率を１情報単位だけ増加するように最小の追加電力を必要とする搬送波に情報単位を割り当てる。余裕電力は、特に確立された送信リンクの等価ノイズスペクトルの値によって決まるので、電力及びデータの割当は、この特定のリンクについてのノイズを補償するように特に調整される。

6

本発明の別の特徴によれば、各搬送波における記号の第１の部分は、記号の巾をＴＥとし、この第１部分の巾をＴＰＨとすれば、巾ＴＥ＋ＴＰＨのガード時間波形を形成するように再送信される。ＴＰＨの大きさは、波形の周波数成分について推定される最大位相遅延に等しいか又はそれより大きい。例えば、記号が時間ＴＥ内に送信された時間シリーズ$x_o \cdots x_n^{-1}$によって表わされる場合には、ガード時間波形が時間ＴＥ＋ＴＰＨ内に送信された時間シリーズ$x_o \cdots x_n^{-1}$，$x_o \cdots x_m^{-1}$によって表わされる。ｍのｎに対する比は、ＴＰＨのＴＥに対する比に等しい。

受信モデムにおいては、ガード時間波形の第１周波数成分の時間インターバルＴｏが決定される。巾ＴＥのサンプリング周期は、時間Ｔｏ＋ＴＰＨにおいて開始される。

従って、各搬送波周波数における全記号がサンプリングされ、記号間の干渉が除去される。

本発明の更に別の特徴によれば、モデムＡとＢとの間での送信リンクの制御の割当は、１つの送信サイクル中に各モデムが送信するパケットの数に対して限界をセットすることによって行なわれる。情報パケットは、１つの波形を構成する搬送波全体においてエンコードされたデータを備えている。又、各モデムは、モデム間の通信リンクを維持するための最小数のパケットを送信するように構成される。従って、１つのモデムが送信すべきデータを有していない場合でも、最小のパケットがタイミングを維持し、他のパラメータが送信される。一方、モデムのデータ量が多い場合には、制限された最大数のパケットＮのみを送信してから他のモデムへ制御権を放棄するような制約が課せられる。

実際に、モデムＡが少量のデータを有しそしてモデムＢが大量のデータを有する場合には、モデムＢが殆どの時間中送信リンクの制御権を有することになる。制御権が最初にモデムＡに指定された場合には、これが最小数Ｉのパケットのみを送信する。従って、モデムＡは、短い時間中にのみ制御権を有する。次いで、制御権はモデムＢに指定され、Ｎ個のパケットを送信する。Ｎは非常に大きなものである。再び、制御権はモデムＡに指定され、Ｉ個のパケットを送信してから制御権をＢに戻す。従って、制御権の割当は、Ｉ対Ｎの比に比例する。モデムＡのデータ量の送信にＬ個のパケットが必要とされる場合（ここで、ＬはＩとＮとの間の値である）、割当は、ＬとＮの比に比例する。従って、送信リンクの割当は、ユーザの実際の要求に基づいて変化する。

更に、パケットの最大数Ｎは、各モデムごとに同じである必要はなく、モデムＡ及びＢによって送信されるべきデータの既知の不均衡を受け入れるように変えることができる。

本発明の更に別の特徴によれば、データを決定する前に信号ロス及び周波数オフセットが測定される。追従システムは、測定値からの変化を決定し、これらのずれを補償する。

本発明の更に別の特徴によれば、Ｔｏの正確な値を決定するシステムが含まれている。このシステムは、時間ＴＡにモデムＡから送信される波形に含まれたf_1及びf_2の２つのタイミング信号を用いている。時間ＴＡにおける第１と第２のタイミング信号間の相対的な位相差はゼロである。

波形は、モデムＢに受け取られ、f_1のエネルギを検出することによって受信時間のおおよその推定値Ｔ　ESTが得られる。この時間Ｔ　ESTにおけるタイミング信号間の相対的な位相差を用いて、正確なタイミング基準Ｔｏが得られる。

図面の簡単な説明

第１図は、本発明に用いられる搬送波周波数全体のグラフ、

第２図は、各搬送波のＱＡＭを示す座標のグラフ、

第３図は、本発明の実施例を示すブロック図、

第４図は、本発明の同期プロセスを示すフローチャート、

第５図は、０，２，４，５，６ビットデータエレメントに対する座標、例示的な信号対雑音比及び各座標に対する電力レベルを示す一連のグラフ、

第６図は、水充填アルゴリズムを示すグラフ、

第７図は、本発明に用いる水充填アルゴリズムの応用を示すヒストグラム、

第８図は、搬送波周波数全体の周波数成分に対する位相依存周波数遅延の影響を示すグラフ、

第９図は、記号間干渉を防止するために本発明に用いられる波形を示すグラフ、

第１０図は、送信された搬送波周波数全体を受信する方法を示すグラフ、

第１１図は、変調テンプレートを示す概略図、

第１２図は、変調テンプレートの１つの方形の象限を示す概略図、そして

第１３図は、本発明のハードウエア実施例を示す概略図である。

好ましい実施例の詳細な説明

本発明は、周波数に依存するラインノイズを補償するように周波数全体における種々の搬送波周波数間で電力を状態に応じて割り当て、周波数に依存する位相遅延を補償するための等化回路の必要性を排除し、変化するチャンネルロード状態を考慮して送信側モデムと受信側モデムとの間でチャンネルを割り当てる二重機構を形成するようなモデムに関する。本発明の更に別の特徴は、以下で述べる。

本発明の理解を容易にするために、本発明に用いられる周波数全体及び変調機構を第１図及び第２図について最初に簡単に説明する。次いで、第３図を参照して、本発明の特定の実施例を説明する。最後に、第４図ないし第１３図を参照して、本発明の動作及び種々の特徴を説明する。

変調及び全体の構成

第１図は、本発明の送信周波数全体１０を示す概略図である。これは、使用可能な４KHzのＶＦ帯域にわたって等しく離間された５１２個の搬送波周波数１２を含んでいる。本発明は、各搬送波周波数における位相に拘りないサイン及びコサイン信号を送信するような直角振幅変調（ＱＡＭ）を用いている。所与の搬送波周波数で送信されるデジタル情報は、その周波数における位相に拘りないサイン及びコサイン信号を振幅変調することによってエンコードされる。

ＱＡＭシステムは、全ビット率ＲＢでデータを送信する。しかしながら、記号もしくはボーレートＲＳで示された各搬送波の送信率は、ＲＢの一部分に過ぎない。例えば、データが２つの搬送波間に等しく割り当てられる場合には、ＲＳ＝ＲＢ／２となる。

好ましい実施例では、０，２，４，５又は６ビットデータエレメントが各搬送波においてエンコードされ、各搬送波の変調は１３６ミリ秒ごとに変化する。各搬送波について６ビットのＲＳを仮定すれば、理論的な最大値ＲＢは、２２５８０ビット／秒（bps）となる。搬送波の７５％にわたって４ビットのＲＳを仮定すれば、典型的に実現できるＲＳは、約１１３００bpsに等しい。この例示的な高いＲＳは、ビットエラー率が１エラー／１００００送信ビット未満の状態で達成される。

第１図において、複数の垂直線１４は、周波数全体を「エポック」と称する時間増分に分割する。エポックは、巾がＴＥであり、ＴＥの大きさは以下で述べるように決定される。

デジタルデータを種々の搬送波周波数にエンコードするＱＡＭシステムを第２図について説明する。第２図には、第ｎ番目の搬送波に対する４ビット「座標」２０が示されている。４ビット数は、１６の個々の値をとることができる。この座標における各点は、ベクトル（ｘｎ，ｙｎ）を表わしており、ｘｎはサイン信号の振幅であるｙｎは磁気ＱＡＭシステムにおけるコサイン信号の振幅である。付随の文字ｎは、変調される搬送波を示している。従って、４ビット座標では、４つの個々のｙｎの値と、４つの個々のｘｎの値とが必要とされる。以下で詳細に述べるように、所与の搬送波周波数で送信されるビットの数を増加するためには、その周波数に等価ノイズ成分があるために、電力を増加することが必要とされる。４ビット送信の場合、受信側のモデムは、ｘｎ及

びｙｎ振幅係数の４つの考えられる値を弁別できねばならない。この弁別能力は、所与の搬送波周波数に対する信号対雑音比によって左右される。

好ましい実施例では、パケット技術を用いてエラー率が減少される。１つのパケットは、搬送波の変調されたエポックと、エラー検出データとを含んでいる。各パケットは、エラーが生じた場合、修正されるまで繰返し送信される。或いは又、データの繰返し送信が所望されないシステムでは、ホワードエラー修正コードを含むエポックが用いられる。

ブロック図

第３図は、本発明の実施例のブロック図である。これについて説明すると、発振側モデム２６は、公共のスイッチ式電話線を経て形成された通信リンクの発振端に接続される。通信システムには、通信リンクの応答端に接続された応答モデムも含まれることを理解されたい。以下の説明において、発振モデムの同じ又は同様の部分に対応する応答モデムの部分は、発振モデムの参照番号にプライム（′）記号を付けて示す。

第３図を説明すると、入ってくるデータ流は、モデム２６の送信システム２８によりデータ入力３０に受け取られる。データは、一連のデータビットとしてバツファメモリ３２に記憶される。バツファメモリ３２の出力は、変調パラメータ発生器３４の入力に接続される。変調パラメータ発生器３４の出力は、ベクトルテーブルバツファメモリ３６に接続され、該バツファメモリ３６は変調器４０の入力に接続される。変調器４０の出力は、時間シーケンスバツファ４２に接続され、次いで、該バツファ４２は、アナログＩ／Ｏインターフェイス４４に含まれたデジタル／アナログコンバータ４３の入力に接続される。インターフェイス４４は、モデムの出力を公共のスイッチ式電話線４８に接続する。

受信システム５０は、公共のスイッチ式電話線４８に接続されてインターフェイス４４に含まれたアナログ／デジタルコンバータ（ＡＤＣ）５２を備えている。ＡＤＣ５２の出力は受信時間シリーズバッファ５４に接続され、該バッファは、次いで、復調器５６の入力に接続される。復調器５６の出力は、受信ベクトルテーブルバッファ５８に接続され、該バッファは、次いで、デジタルデータ発生器６０の入力に接続される。このデジタルデータ発生器６０の出力は、受信データビットバッファ６２に接続され、該バッファは、出力端子６４に接続される。

制御及びスケジュールリングユニット６６は、変調パラメータ発生器３４、ベクトルテーブルバッファ３６、復調器５６及び受信ベクトルテーブルバッファ５８に接続されている。

第３図に示された実施例の機能について概略的に説明する。データを送信する前に、発振モデム２６は、応答モデム２６′と協働して、各搬送波周波数における等価ノイズレベルを測定し、各搬送波周波数で送信されるべきエポック当たりのビット数を決定し、以下で詳細に述べるように、各搬送波周波数に電力を割り当てる。

入ってくるデータは、入力ポート３０で受け取られ、入力バッファ３２に記憶されるビットシーケンスにフォーマット化される。

変調器３４は、上記のＱＡＭシステムを用いて、所与の数のビットを各搬送波周波数のための（ｘｙ，ｙｎ）ベクトルにエンコードする。例えば、周波数ｆｎで４つのビットを送信することが決定された場合には、ビット流からの４つのビットが第２図の４ビット座標内の１６個の点の１つに変換される。これら座標点の各々は、４つのビットの１６個の考えられる組合せの１つに対応する。従って、周波数ｎに対するサイン及びコサイン信号の振幅は、ビットシーケンスの４つのビットをエンコードする座標内の点に対応する。（ｘｎ，ｙｎ）ベクトルは、次いで、ベクトルバッファテーブル３６に記憶される。変調器は、周波数全体に含まれた搬送波のための（ｘｎ，ｙｎ）ベクトルのテーブルを受け取り、ＱＡＭ搬送波周波数の全体を構成する波形を表わすデジタルエンコード化された時間シリーズを形成する。

好ましい実施例では、変調器４０は、高速フーリエ変換器（ＦＦＴ）を備えており、（ｘ，ｙ）ベクトルをＦＦＴ係数として用いて逆ＦＦＴ演算を実行する。ベクトルテーブルは、５１２周波数座標の１０２４個のＦＦＴ点を表わす１０２４の個々の点を含んでいる。逆ＦＦＴ演算により、ＱＡＭ全体を表わす１０２４個の点が時間シリーズで形成される。このデジタルエンコードされた時間シリーズの１０２４個のエレメントは、デジタル時間シリーズバッファ４２に記憶される。デジタル時間シーケンスは、アナログ／デジタルコンバータ４３によりアナログ波形に変換され、インターフェイス４６は、公共のスイッチ式電話線４８を経て送信するように信号を調整する。

受信システム５０について説明すれば、公共のスイッチ式電話線４８から受信したアナログ波形は、インターフェイス４６によって調整され、アナログ／デジタルコンバータ５２に向けられる。アナログ／デジタルコンバータ５２は、アナログ波形をデジタルの１０２４入力時間シリーズテーブルに変換し、これは、受信時間シリーズバッファ５４に記憶される。復調器５６は、１０２４入力時間シリーズテーブルを５１２入力（ｘｎ，ｙｎ）ベクトルテーブルに変換し、これは、受信ベクトルテーブルバッファ５８に記憶される。この変換は、時間シリーズに基づいてＦＦＴを実行することにより行なわれる。各周波数搬送波にエンコードされたビットの数に関する情報は、復調器及びデジタルデータ発生器６０に既に記憶されており、従って、受信ベクトルテーブルバッファ５８に記憶された（ｘ，ｙ）テーブルは、デジタルデータ発生器６０により出力データビットシーケンスに変換

されることに注意されたい。例えば（ｘｎ，ｙｎ）ベクトルが４ビットのシーケンスを表わす場合には、このベクトルがデジタルデータ発生器６０により４ビットシーケンスに変換されそして受信データビットバッファ６２に記憶される。受信データビットシーケンスは、次いで、出力データ流として出力６４へ送られる。

使用するＦＦＴ技術の完全な説明は、１９７５年N.Ｊ．のプレンティス・ホール・インク（Prentice-Hall, Inc.,）により出版されたラビナ（Rabiner）氏等の「デジタル信号処理の理論及び応用（Theory and Applications of Digital Signal Processing）」と題する文献に述べられている。しかしながら、上記したＦＦＴ変調技術は、本発明の重要な部分ではない。或いは又、参考としてここに取り上げる前記バラン氏の特性のカラム１０、ライン１３－７０及びカラム１１、ライン１－３０に述べられたように、搬送波トーンを直接乗算することによって変調を行なうこともできる。更に、バラン氏の特許のカラム１２、ライン３５－７０、カラム１３、ライン１－７０及びカラム１４、ライン１－１３に述べられた復調システムと取り替えることもできる。

制御及びスケジュールリングユニット６６は、一連の動作を全体的に監視するように維持し、入力及び出力機能を制御する。

等価ノイズの測定

上記したように、各周波数搬送波にエンコードされたデータエレメント及びその周波数搬送波に割り当てられた電力の情報内容は、その搬送波周波数におけるチャンネルノイズ成分の大きさによって左右される。周波数ｆｎにおける等価送信ノイズ成分Ｎ（ｆｎ）は、周波数ｆｎにおける測定した（受信した）ノイズ電力に、周波数ｆｎにおける測定した信号ロスを乗算したものである。等価ノイズはラインごとに変化し、所与のラインにおいても時間ごとに変化する。従って、ここに示すシステムでは、データ送信の直前にＮ（ｆ）が測定される。

このＮ（ｆ）を測定して、応答及び発振モデム２６と２６′との間に通信リンクを確立するために本システムに用いられる同期技術の段階が第４図に示されている。第４図を説明すれば、ステップ１において、発振モデムは応答モデムの番号をダイヤルし、応答モデムはオフ・フックの状態となる。ステップ２において、応答モデムは、次の電力レベルで２つの周波数のエポックを送信する。

（ａ）１４３７．５Ｈｚ：－３dBR

（ｂ）１６８７．５Ｈｚ：－３dBR

電力は、基準値Ｒに対して測定し、好ましい実施例では、０dBR＝－９dBmであり、mはミリボルトである。これらのトーンは、以下で詳細に説明するように、タイミング及び周波数オフセットを決定するのに用いられる。

次いで、応答モデムは、全部で５１２の周波数を含む応答コームを－２７dBRで送信する。発振モデムは、この応答コームを受け取り、このコームにおいてＦＦＴを実行する。５１２個の周波数の電力レベルは指定の値にセットされるので、応答モデム２６の制御及びスケジュールリングユニット６６は、受信したコードの各周波数に対して（ｘｎ，ｙｎ）値を比較し、これらの値を、送信された応答コードの電力レベルを表わす（ｘｎ，ｙｎ）値のテーブルと比較する。この比較により、ＶＦ電話線を通しての送信による各周波数の信号ロスが得られる。

ステップ３の間に、発振モデム２６及び応答モデム２６′の両方は、各々のモデムによる送信が行なわれない場合にラインに存在するノイズデータを累積する。次いで、両方のモデムは、累積されたノイズ信号に基づいてＦＦＴを実行し、各搬送波周波数における測定した（受信した）ノイズスペクトル成分値を決定する。多数のノイズエポックを平均化して、測定値の精度を高める。

ステップ４において、発振モデムは、２つの周波数のエポックと、それに続いて、５１２の周波数の発振コームを、ステップ２について述べたものと同じ電力レベルで送信する。応答モデムは、エポック及び発振コームを受け取り、ステップ２の発振モデムについて述べたように各搬送波周波数におけるタイミング、周波数ずれ及び信号ロスの値を計算する。この点において、発振モデム２６は、ノイズ及び信号ロスデータを応答発振方向に送信するように累積しており、一方、応答モデムは、発振応答方向の送信に関連する同じデータを累積している。各モデムは、発振応答方向及び応答発振方向の両方における送信ロス及び受信ノイズに関連したデータを必要とする。それ故、このデータは、同期プロセスの残りのステップに基づいて２つのモデム間で交換される。

ステップ５において、発振モデムは、どの搬送波周波数が標準電力レベルの２ビット送信を応答発振方向に維持するかを示す第１の位相エンコード信号を発生して送信する。標準電力レベルで応答発振方向に２ビットを維持する各成分は、１８０°の相対的な位相を有した－２８dBR信号として発生される。標準電力レベルで応答発振方向に２ビット送信を維持しない各成分は、－２８で０°の相対的位相の信号としてコード化される。応答モデムは、この信号を受信し、どの周波数搬送波が応答発振方向に２ビットの送信を維持するかを決定する。

ステップ６において、応答モデムは、どの搬送波周波数が発振応答方向及び応答発振方向の両方に２ビット送信を維持するかを示す第２の位相エンコード信号を発生し送信する。この信号を発生できるのは、応答モデムが発振応答方向のノイズ及び信号ロスデータを累積しており且つステップ５で発振モデムにより発生された信号において応答発振方向に対して同じデータを受信しているからである。発振モデムによって発生された信号において、２つのビットを両方向に維持する各周波数成分は、１８０°の相対的な位相でコード化され、他の全ての成分は、０°の相対的な位相でコード化される。

これで、２つのモデム間に送信リンクが存在する。一般に、３００ないし４００個の周波数成分が標準電力レベルの２ビット送信を維持し、これにより、２つのモデム間に約６００ビット／エポック率を確立する。ステップ７では、この存在するデータリンクを経て形成される全体的なパケットにおいて応答発振方向に各周波数で維持することのできるビットの数（０－１５）及び電力レベル（０－６３dB）に関するデータを発振モデムが送信する。従って、ここで、発振及び応答モデムの両方は、応答発振方向の送信に関するデータをもつことになる。各周波数成分に維持することのできるビットの数及び電力レベルを計算するためのステップについて以下に述べる。

ステップ８において、応答モデムは、存在するデータリンクを用いて発振応答方向に各周波数に維持することのできるビットの数及び電力レベルに関するデータを送信する。従って、両モデムは、応答発振及び発振応答の両方向において各周波数成分に維持すべきビットの数及び電力レベルが分かる。

各搬送波周波数における等価ノイズレベル成分の決定に関する上記の説明では、所与のシーケンスの所要のステップが説明された。しかしながら、これらの一連のステップはあまり重要ではなく、多くのステップは同時に行なってもよいし別の順序で行なってもよい。例えば、発振コードに基づくＦＦＴの実行とノイズデータの累積を同時に行なうことができる。又、同期プロセス中に正確なタイミング基準も計算される。このタイミング基準の計算は、各周波数成分に割り当てられたビットの数及び電力レベルを計算する方法を説明した後に、詳細に述べる。

送信信号と受信信号との間に７Hzまでの周波数オフセットが存在するのは、一般のＶＦ電話線の障害である。ＦＦＴを確実に機能させるためには、このオフセットを補正しなければならない。好ましい実施例では、この補正は、受信信号の真の像及びヒルバート像によりオフセット周波数における直角トーンの片側波帯変調を行なうことによって達成される。同期及び追従アルゴリズムにより、必要な周波数オフセットの推定値が形成される。

電力及びコードの複雑さ、即ち１回の変調で送信するビット数の指定

各搬送波周波数信号にエンコードされた情報は、復調器５６により受信チャンネルにおいてデコードされる。チャンネルノイズは、送信信号を歪ませ、復調プロセスの精度を低下させる。例えば、特定の周波数ｆｏにＢｏ個のビットがあるという特定の複雑さ、即ち１回の変調で送信するビット数を有するデータエレメントを、等価ノイズレベル成分Ｎｏにより特徴付けられたＶＦ電話線を経て送信する場合について分析する。一般に、外部システムの条件により、許容できる最大ビットエラー率が決定される。ノイズレベルＮｏ及び周波数ｆｏでｂｏ個のビットを送信する場合には、信号対雑音比がＥｂ／Ｎｏ以上でなければならない。但し、Ｅｂは、ＢＥＲを所与のＢＥＲ（ＢＥＲ）ｏより小さく維持するための信号電力／ビットである。

第５図は、種々の複雑さ、即ち１回の変調で送信するビット数Ｂの信号に対するＱＡＭ座標を示している。各座標に対する例示的な信号対雑音比Ｅｂ／Ｎｏと、上記の（ＢＥＲ）ｏを越えずにこの座標におけるビットの数を送信するに要する電力とが、各座標グラフの横に示されている。

モデムは、公共のスイッチ式電話線に出力される全利用電力が電話会社及び政府機関によって設定された値Ｐｏを越えないという制約のもとで作動する。従って、ラインノイズを補償するために信号電力が不定に増加することはない。それ故、所要のＢＥＲを維持するためには、ノイズが増加するにつれて、送信信号の複雑さ、即ち１回の変調で送信するビット数を低減しなければならない。

殆どの既存のモデムは、ラインノイズ電力が増加する時に、信号の複雑さ、即ち１回の変調で送信するビット数をダウン方向に任意にギヤシフトする。例えば、１つの公知のモデムは、ビットエラー率が指定の最大値以下に減少されるまで、送信データ率を、９６００bpsの最大値から、７２００bps、４８００bps、２４００bps、１２００bps、等々の段階で低下させる。従って、信号率は、ノイズを補償するように大きな段階で減少される。バラン氏の特許においては、送信率を減少する方法は、ノイズスペクトルの周波数依存性を考慮するものである。従って、各チャンネルは、プリセットされた数のビットを指定の電力レベルで保持している。各周波数のノイズ成分が測定され、各搬送波周波数で送信すべきであるかどうかについて判断がなされる。従って、バラン氏の特許では、データ率減少機構が、利用できる帯域巾にわたるノイズの実際の分布を補償する。

本発明では、各周波数搬送波における信号の複雑さ、即ち１回の変調で送信するビット数及び各周波数搬送波に割り当てられた利用可能な電力の量がラインノイズスペクトルの周波数依存性に応答して変化する。

全周波数内の周波数成分信号に種々のコードの複雑さ、即ち１回の変調で送信するビット数及び電力レベルを指定する本システムは、水充填アルゴリズムに基づくものである。水充填アルゴリズムは、チャンネルを横切る情報の流れを最大にするようにチャンネルの電力を指定する情報理論的な方法である。チャンネルは、ノイズ分布が不均一である形式のもので、送信器は電力の制約を受ける。第６図は、水充填アルゴリズムを目で見て分かるようにするものである。第６図について説明すれば、電力は垂直軸に沿って測定され、周波数は水平軸に沿って測定される。等価ノイズスペクトルは実線６０で表わされ、利用可能な電力は、交差斜線領域７２によって表わ

15

される。水充填という名称は、指定電力を表わす或る量の水が充填される山間の一連の谷に等価ノイズ関数が類似していることから付けられたものである。水は谷を満たし、水平面をとる。水充填アルゴリズムの理論的な説明は、１９６８年、ニューヨーク、Ｊ．Ｗｉｌｅｙ　ａｎｄ　Ｓｏｎｓ出版の「情報理論及び信頼性のある通信（Ｉｎｆｏｒｍａｔｉｏｎ　Ｔｈｅｏｒｙ　Ａｎｄ　Ｒｅｌｉａｂｌｅ　Ｃｏｍｍｕｎｉｃａｔｉｏｎ）」と題するガラハー（Ｇａｌｌａｇｈｅｒ）氏の文献に述べられている。

水充填理論は、種々のコード（全てエラー修正のためのもの）を用いて達成できる全てのデータ率の最大値として容量が定められ且つ無限の長さであることが最良の傾向であるようなチャンネルの理論的な容量を最大にすることに関するものである点を強調しておく。

本発明による方法は、チャンネルの容量を最大にするものではない。むしろ、本発明の方法は、第１図について上記したように利用可能な電力に制約のあるＱＡＭ全体を用いて送信される情報の量を最大にするものである。

水充填の考え方の実行は、指定の電力レベルが第２の最低搬送波の等価ノイズレベルに達するまで最低の等価ノイズフロアを有する搬送波に利用可能な電力の増分を割り当てることである。この割当を行なう場合には、５１２の周波数を走査しなければならない。

次いで、第３の最低チャンネルの等価ノイズレベルに達するまで２つの最低搬送波の間で増分電力が割り当てられる。この割当レベルの場合には、周波数テーブルを何回も走査することが必要で、計算上から非常に複雑である。

本発明の好ましい実施例に用いる電力の割当方法は、次の通りである。

（１）受信器において等価ノイズを測定しそして送信ロスで乗算することにより送信器におけるシステムノイズを計算する。これらの量を測定するこのプロセスは、第４図を参照し同期について上記で説明した。システムノイズ成分は、各搬送波周波数について計算される。

（２）各搬送波周波数に対し、色々な複雑さ（ここに示す場合には、０，２，４，５，及び６）のデータエレメントを送信するに必要な電力レベルを計算する。これは、所要のＢＥＲ、例えば、１エラー／１００００００ビットで種々のデータエレメントを送信するに必要な信号対雑音比によって等価ノイズを乗算することにより行なわれる。全ＢＥＲは、変調された各搬送波の信号エラー率の和である。これらの信号対雑音比は、標準的な基準から得られ、この分野で良く知られている。

（３）計算された所要の送信電力レベルから、データエレメントの複雑さ、即ち１回の変調で送信するビット数を増加するに必要な余分な電力レベルが決定される。これらの余分な所要の電力レベルは、送信電力の差を、複雑さ、即ち１回の変調で送信するビット数が最も接近し

16

ているデータエレメントの複雑さ、即ち１回の変調で送信するビット数の量的な差で除算したものである。

（４）各々のチャンネルについて、余分な所要電力レベル及び量的な差の２カラムテーブルを形成する。それらの単位は、典型的に、各々ワット及びビットで表わされる。

（５）次第に大きくなる余分な電力に従って上記ステップ４のテーブルを編成することによりヒストグラムを構成する。

（６）利用できる電力が尽きるまで、次第に大きくなる余計な電力に対して利用できる送信電力を順次に指定する。

上記の電力割当方法は、簡単な例によって良く理解できよう。この例に含まれる数値は、オペレーティングシステムにおいて遭遇するパラメータを表わすものではない。

表１は、周波数ｆＡ及びｆＢの２つの搬送波Ａ及びＢに対し、選択されたビット数N_1のデータエレメントを送信するための所要電力Ｐを示している。

表　１

搬送波Ａ			
N_1	N_2-N_1	P	$MP(N_1 \sim N_2)$
0	－	0	－
2	2	4	MP(0～2)＝２／ビット
4	2	12	MP(2～4)＝４／ビット
5	1	19	MP(4～5)＝７／ビット
6	1	29	MP(5～6)＝10／ビット

搬送波Ｂ			
N_1	N_2-N_1	P	$MP(N_1 \sim N_2)$
0	－	0	－
2	2	6	MP(0～2)＝３／ビット
4	2	18	MP(2～4)＝６／ビット
5	1	29	MP(4～5)＝11／ビット
6	1	44	MP(5～6)＝15／ビット

第１のビット数N_1から第２のビット数N_2へ複雑さ、即ち１回の変調で送信するビット数を増加するための余分な電力は、次の関係式によって定められる。

$$MP(N_1 \sim N_2) = \frac{P_2 - P_1}{N_2 - N_1}$$

但し、P_2及びP_1は、複雑さ、即ち１回の変調で送信するビット数N_2及びN_1のデータエレメントを送信するに必要な電力である。N_2-N_1は、データエレメントの複雑さ、即ち１回の変調で送信するビット数の量的な差である。ＢＥＲは、プリセット限界以下に保つように制限されることを理解されたい。

周波数ｆＡに対する余分な電力は、周波数ｆＢに対するものよりも少ない。というのは、ｆＢにおける等価ノイズＮ（ｆＢ）がｆＡにおける等価ノイズＮ（ｆＡ）より大きいからである。

搬送波Ａ及びＢの割当機構に実施について以下に述べる。全ビット数ＮＴが周波数全体にエンコードされるが、搬送波ＡにもＢにもビットが割り当てられていないものと仮定する。例えば、Ｎ（ｆＡ）及びＮ（ｆＢ）は、既にデータを保持しているこれらの搬送波の電力よりも大きい。

この例では、システムは、全データエレメントの複雑さ、即ち１回の変調で送信するビット数を最大量だけ増加するために利用可能な残りの１０個の電力単位を搬送波ＡとＢとの間で割り当てる。

ＮＴを２ビットだけ増加するためには、チャンネルＡを用いる場合は４単位の電力を割り当てねばならず、チャンネルＢを用いる場合は６単位の電力を割り当てねばならない。というのは、両チャンネルに対してN_1＝０及びN_2＝２でありそしてチャンネルＡに対してＭＰ（０～２）＝２／ビット、チャンネルＢに対してＭＰ（０～２）＝３／ビットであるからである。それ故、システムは、４単位の電力を搬送波Ａに割り当て、２ビットデータエレメントを搬送波Ａにコード化し、全信号の複雑さ、即ち１回の変調で送信するビット数をＮＴからＮＴ＋２に増加し、残りの利用可能な電力単位が６となる。２ビットを更に増加する場合には、搬送波Ａに対してＭＰ（２～４）＝４／ビットで且つチャンネルＢに対してＭＰ（０～２）＝３ビットであるから、電力単位が６つで必要である。それ故、システムは、６単位の電力を搬送波Ｂに割り当て、２ビットデータエレメントを搬送波Ｂにエンコードし、全信号の複雑さ、即ち１回の変調で送信するビット数をＮＴ＋２からＮＴ＋４ビットに増加し、残りの利用可能な電力単位はゼロとなる。

ここで明らかなように、システムは、種々の搬送波周波数の中で電力コストが最低のものを「買い（ｓｈｏｐ）」、全データエレメントの複雑さ、即ち１回の変調で送信するビット数を増加させる。

割当システムは、周波数を最初に走査する間に各搬送波に対し最初に表１を形成することによって全部で５１２個の搬送波全体まで拡張される。

次いで、全ての搬送波に対して計算された余計な所要電力レベルを次第に大きくなる電力に従って編成したヒストグラムが構成される。第７図は、本発明の方法により構成した例示的なヒストグラムを示している。

第７図には、余計な電力の全体的な表が示されていない。むしろ、このヒストグラムは、0.5dBのステップでカウント値が離された６４dBの範囲を有するように構成される。ステップとステップとの間の量的な差がカウントとして用いられる。この解決策では若干の丸めエラーが生じるが、作業の長さを著しく低減することができる。ヒストグラムを構成するのに用いる方法は、本発明を実施するのに重要ではない。

ヒストグラムの各カウントは、そのカウントにおける電力値に等しい余分な電力値を有する搬送波の数を表わしている整数入力を有している。このヒストグラムは、最低の電力レベルから走査される。各カウントの整数入力は、カウントの数値で乗算され、利用可能な電力から減算される。走査は、利用可能な電力が尽きるまで続けられる。

走査が完了すると、所与のレベルＭＰ（ｍａｘ）より低い全ての余計な電力値が電力及びデータの割当に受け入れられることが決定される。更に、利用可能な電力が余計な電力レベルＭＰ（ｍａｘ）を通して部分的に尽きた場合には、ｋ個の追加搬送波に、ＭＰ（ｍａｘ＋１）に等しい電力が割り当てられる。

次いで、システムは、種々の搬送波に電力及びデータを割り当てるために再び周波数全体を走査する。各搬送波に割り当てられる電力の量は、ＭＰ（ｍａｘ）に等しいか又はそれより小さい当該搬送波に対する余分な電力値の和である。これに加えて、ｋＭＰ（ｍａｘ＋１）の値がそれまで割り当てられていない場合には、ＭＰ（ｍａｘ＋１）に等しい電力の量が割り当てられる。

タイミング及び位相遅延の補償

受信システムによって（ｘ，ｙ）ベクトルテーブルを再構成する場合には、受信した波形を１０２４回サンプリングすることが必要である。帯域巾は約４KHzであり、従って、ナイキストのサンプリング率は約８０００／秒で、サンプル間の時間サンプルオフセットは１２５マイクロ秒である。従って、全サンプリング時間は１２８ミリ秒である。同様に、送信ＦＦＴは、１０２４の入力を有する時間シリーズを発生し、記号時間は１２８ミリ秒である。

サンプリングプロセスでは、サンプリングを開始するためのタイミング基準が必要とされる。このタイミング基準は、同期中に次の方法によって確立される。第４図を参照して定められた同期ステップ中には、発振モデムが時間ＴＥＳＴに応答コームにおける１４３７．５Hzの周波数成分（第１のタイミング信号）のエネルギを検出する。上記の時間は、第１のタイミング周波数成分が受信器に到達する正確な時間のおおよその尺度であり、一般に、約２ミリ秒までの精度である。

このおおよその尺度は、次の段階によってその精度が高められる。第１のタイミング信号及び第２のタイミング信号（１６８７．５Hz）は、エポックマークにおいて相対的な位相がゼロの状態で送信される。

発振モデムは、時間ＴＥＳＴにおいて第１及び第２のタイミング信号の位相を比較する。第１と第２のタイミング信号間に２５０Hzの周波数差があると、各１２５マイクロ秒の時間サンプルオフセットに対し２つの信号間に１１°の位相ずれが生じる。第１及び第２のタイミング信号は、それらの位置が帯域の中心付近にあるために相対的な位相歪みが僅かである（２５０マイクロ秒未満）。従って、２つのタイミングサンプルの位相を比較しそして位相差によって指示された時間サンプリングオ

フセットの個数でＴＥＳＴを修正することにより、正確なタイミング基準Ｔｏを決定することができる。

サンプリングプロセスをタイミングどりすることに関連した更に別の問題は、周波数に依存した位相遅延がＶＦラインによって誘起されることである。この位相遅延は、典型的に、ＶＦ電話線の場合には、約２ミリ秒或いはそれ以上である。更に、この位相遅延は、４KHzの使用帯域の端付近では著しく悪化する。

第８図は、周波数に依存する位相遅延を受けた後の全周波数の周波数搬送波の分布を示している。第８図を説明すれば、周波数f_0，f_{256}　及びf_{512}　に３つの信号９０，９４，及び９２が示されている。長さがＴｓの２つの記号ｘｉ及びｙｉは、各周波数において送信される。各記号の巾は、不変であることに注意されたい。しかしながら、帯域９０及び９２の端付近の信号の先縁は、帯域９４の中心付近のこれら信号に対して遅延される。

更に、２つの順次に送信されたエポックｘｉ及びｙｉについては、帯域の外端付近にある信号９２及び９６上の第１記号ｘｉの後部が、帯域の中心付近にある記号９４上の第２記号ｙｉの先端に重畳する。この重畳により、記号間の干渉が生じる。

サンプリングインターバルが所与の時間インターバルＴｓでサンプリングするように枠付けされる場合には、全周波数における各搬送波の完全なサンプルが得られず、他のエポックからの信号がサンプリングされる。

既存のシステムは、位相修正（等化）回路網を用いて位相歪みを補償すると共に記号間の干渉を防止する。

本発明は、独特なガード時間フォーマットを用いて等化回路網の必要性を排除するものである。このフォーマットが第９図に示されている。

第９図を説明すれば、時間シリーズｘｉ，ｙｉ及びｚｉによって各々表わされた第１、第２及び第３の送信記号が示されている。第９図に示された波形は、周波数ｆの搬送波の１つに変調される。この例では、記号時間Ｔｓが１２８ミリ秒で、最大位相遅延ＴPHが８ミリ秒であると仮定される。ガード時間波形は、１３６ミリ秒のエポックを定める。例えば、第１の波形１１０（ｘｉ）においては、記号の時間シリーズ$X_0 - X_{1023}$　が最初に送信され、次いで、記号の最初の８ミリ秒$X_0 - X_{63}$　が繰り返される。

エポックのサンプリングは、ガード時間波形の最後の１２８ミリ秒に揃えされる（最初に到着する周波数成分によって定められたガード時間エポックの開始に対して）。

この検出プロセスが第１０図に示されている。第１０図において、帯域の中心付近のf_1と、帯域の端付近のf_2とにおける第１及び第２のガード時間波形１１０及び１１２が示されている。f_1における周波数成分は、受信器に最初に到着する全周波数のうちの成分であり、f_2における成分は、最後に到着する成分である。第１０図において、f_2の第２の波形１１２は、f_1の第１の波形１１０が受信器に到着する時間Ｔｏ後の時間Ｔｏ＋TPH（８ミリ秒）に受信器に到着する。この時間Ｔｏ＋TPHに１２８ミリ秒のサンプリング時間が開始される。従って、f_2の全記号$X_0 - X_{1023}$　がサンプリングされる。その記号の最初の８ミリ秒が再送信されるので、f_1の全記号もサンプリングされる。

又、記号間の干渉も排除される。f_1の第２記号（ｙｉ）の到着は、（ｘｉ）の最初の８ミリ秒の再送信によって、８ミリ秒遅延される。従って、f_1の第２記号の先端は、f_2の第１記号の後端と重畳しない。

８ミリ秒のガード時間は、システムの使用可能な時間と帯域巾との積を約６％減少するに過ぎない。この僅かな減少は、必要なガード時間に対して各記号の巾が非常に長いことによるものである。

追従

実際に、所与の搬送波については、復調プロセス中に抽出される（ｘ，ｙ）ベクトルの大きさが厳密に座標点に入らず、ノイズ及び他のファクタにより各点のまわりに或る程度分布される。従って、信号は、第１１図に示された変調テンプレートを用いてデコードされる。

第１１図を説明すれば、テンプレートは方形１１３のグリッドで形成され、方形１１３の中心には座標点１１４が設けられている。

第１１図において、ベクトルW＝（ｘｎ，ｙｎ）は、ｆｎにおけるサイン及びコサイン信号の復調された振幅を表わしている。Wは、座標点（３，３）を中心とする方形１１３内にある。従って、Wは、（３，３）とデコードされる。

本発明は、同期中に決定された値からの送信ロス、周波数オフセット及びタイミングの変化を決定するように追従を行なうシステムを備えている。

この追従システムは、第１１図の復調テンプレートの方形における受信ベクトルの位置を利用するものである。

第１２図において、１つの方形が、左下、右上、右上及び左下、各々、１１５，１１６，１１７及び１１８の４つの象限に分けられており、これらは、各々、速過ぎ、遅過ぎ、大き過ぎ、小さ過ぎを表わしている。これら４つの全ての象限におけるカウントが、或る周波数において或る時間に及ぶものも、或る時間において或る周波数に及ぶものも、互いに等しいか又はほゞ等しい場合には、システムが整列状態にある。即ち、ノイズが唯一の障害である場合には、デコードされたベクトルWに対するエラーの方向がランダムとなる。

しかしながら、送信ロスが0.1dBでも変化する場合には、小さ過ぎるカウントの数が大き過ぎるカウントの数から著しく変化する。同様に、速過ぎるカウントの数と遅過ぎるカウントの数との差が大きい場合には、オフセット周波数の変化によって位相の回転が生じたことを示

している。従って、速過ぎ、遅過ぎ及び大き過ぎ、小さ過ぎのカウント間の差は、信号ロス及びオフセット周波数の変化に追従するエラー特となる。

本発明は、このエラー特性を用いて、同期中に決定された信号ロス及び周波数オフセットを調整するものである。各周波数に対し、±0.1dB又は±1.0°の調整がエラー特性に基づいて行なわれる。或る実施例では、デコード領域を、速過ぎ、遅過ぎ、大き過ぎ、小さ過ぎという個別の又は重畳するサブ領域に別のやり方で分割するのが好ましい。

更に、タイミング信号の位相は、Ｔｏを修正できるように追従される。

チャンネル制御権の指定

本発明は、更に、確立された通信リンクの制御権を発振モデムと応答モデム（各々、Ａ及びＢと称する）の間で指定する独特のシステムを具備している。エンコードされた全周波数で構成される各波形は、情報パケットを形成する。

通信リンクの制御権は、最初に、モデムＡに指定される。次いで、モデムＡは、その入力バッファにおけるデータの量を決定し、Ｉ（最小）とＮ（予め定めた最大）のデータパケットの間で適当に送信を行なう。所定数Ｎは限界として働き、送信されるパケットの最終的な個数は、入力バッファを空にするに必要なものよりも著しく小さい。一方、モデムＡがその入力バッファに殆ど或いは全くデータを有していない場合には、モデムＢとの通信を維持するために依然としてＩ個の情報パケットを送信する。例えば、Ｉ個のパケットは、第４図及び同期プロセスについて述べた周波数の発振又は応答コームを含む。

次いで、通信リンクの制御権はモデムＢに指定され、該モデムは、モデムＡの動作を繰り返す。もちろん、モデムＢが最小数Ｉのパケットを送信する場合には、モデムＢが働いていることをモデムＡに知らせる。

迅速な文字やエコーや他のユーザ向けの目標を達成するために、２つのモデムの限界Ｎを同じものにしたり或いはモデム制御のもとでこれらモデムの適用を制限したりする必要はない。

ハードウェアの実施

第１３図は、本発明のハードウェア実施例を示すブロック図である。第１３図を説明すれば、電子的なデジタルプロセッサ１２０、アナログＩ／Ｏインターフェイス４４及びデジタルＩ／Ｏインターフェイス１２２が共通のデータバス１２４に接続されている。アナログＩ／Ｏインターフェイス４４は、公共のスイッチ式電話線４８を共通のデータバス１２４にインターフェイスし、デジタルインターフェイス１２２は、デジタルターミナル装置１２６を共通のデータバス１２４にインターフェイスする。

本発明の好ましい実施例では、次の部品が使用される。

アナログＩ／Ｏインターフェイス４４は、高性能の１２ビットコーダ・デコーダ（コーデック）及び電話線インターフェイスである。このインターフェイスは、ＲＡＭ１３２をアクセスし、監視マイクロプロセッサ１２８によって制御される。コーデックは、アナログ／デジタルコンバータ、デジタル／アナログコンバータ及び多数のバンドパスフィルタを単一のチップに組み合わされたものである。

デジタルＩ／Ｏインターフェイス１２２は、標準的な２５ピンのＲＳ２３２型コネクタに対する標準的なＲＳ２３２直列インターフェイスであるか或いはパーソナルコンピュータバスに対する並列インターフェイスである。

電子的なデジタルプロセッサ１２０は、アドレスバス１３５に接続された監視プロセッサ１２８と、汎用の数学プロセッサ１３０と、３２Ｋ×１６ビットの共用ＲＡＭサブシステム１３２と、リードオンメモリ（ＲＯＭ）ユニット１３３とを備えている。

監視マイクロプロセッサ１２８は、１０MHzの６８０００プロセッサ及び６８０００プログラムメモリを含む６８０００データプロセッササブシステムである。３２Ｋ×１６ビットのプログラムメモリは、ＲＯＭユニット１３３に含まれた多数の低電力高密度のＲＯＭチップで構成される。

数学プロセッサ１３０は、２０MHzの３２０プロセッサ、３２０プログラムメモリ及び共用ＲＡＭシステムのインターフェイスを含む３２０デジタル信号マイクロプロセッサシステム（ＤＳＰ）である。ＲＯＭユニット１３３に含まれた２つの高速ＲＯＭチップは、８１９２×１６ビットのプログラムメモリを構成する。

３２０システムのプログラムメモリは、変調テーブルのルックアップ、ＦＦＴ、復調及び上記の他の動作を実行するプログラムを含んでいる。６８０００プロセッサは、入力及び出力のデジタルデータ流を処理し、３２０信号プロセッサ及びそれに関連したアナログＩ／Ｏへのタスク及びその監視を実行し、そしてそれ自体及びシステムのテストを適宜実行する。

本発明は、特定の実施例について説明した。他の実施例は、今や、当業者に明らかであろう。

特に、搬送波周波数全体は、上記したように制限しなくてもよい。搬送波の数は、２の累乗、例えば、１０２４でもよいし、他の任意の数でもよい。更に、周波数は、全ＶＦ帯域にわたって均一に離間されてなくてもよい。更に、ＱＡＭ機構は、本発明の実施にとって重要ではない。例えば、ＡＭを使用してもよいが、データ率ＲＢが低下する。

更に、変調テンプレートは方形で構成する必要がない。座標点を取り巻く任意の形状の領域を画成することができる。追従システムは、変調テンプレートの方形を４つの象限に分割したものについて説明した。しかしながら、座標点の周りに画成された任意の領域におけるカウ

23

ント数の差を追跡することにより所与のパラメータを追跡することができる。

更に、監視マイクロプロセッサ及び汎用の数学プロセッサを含むハードウエア実施例についても説明した。しかしながら、色々な組合わせのＩＣチップを使用することができる。例えば、専用のＦＦＴチップを用いて、変調＊

24

＊及び復調動作を実行することができる。

更に、上記で用いた情報単位はビットであった。しかし、本発明は、２進システムに限定されるものではない。

それ故、本発明は、請求の範囲のみによって限定されるものとする。

【第１図】

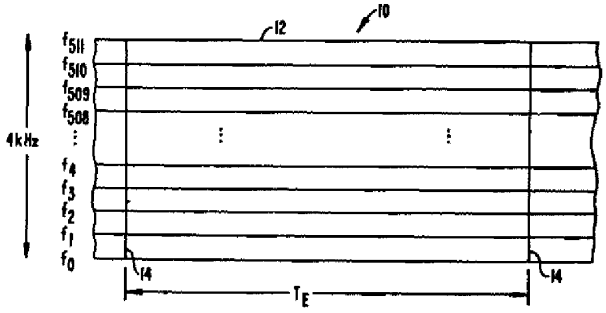

【第２図】

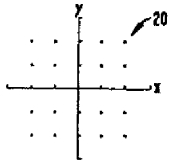

【第１１図】

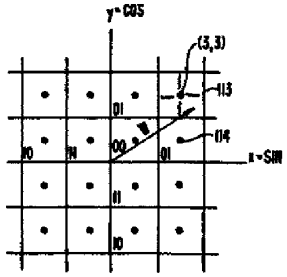

【第３図】

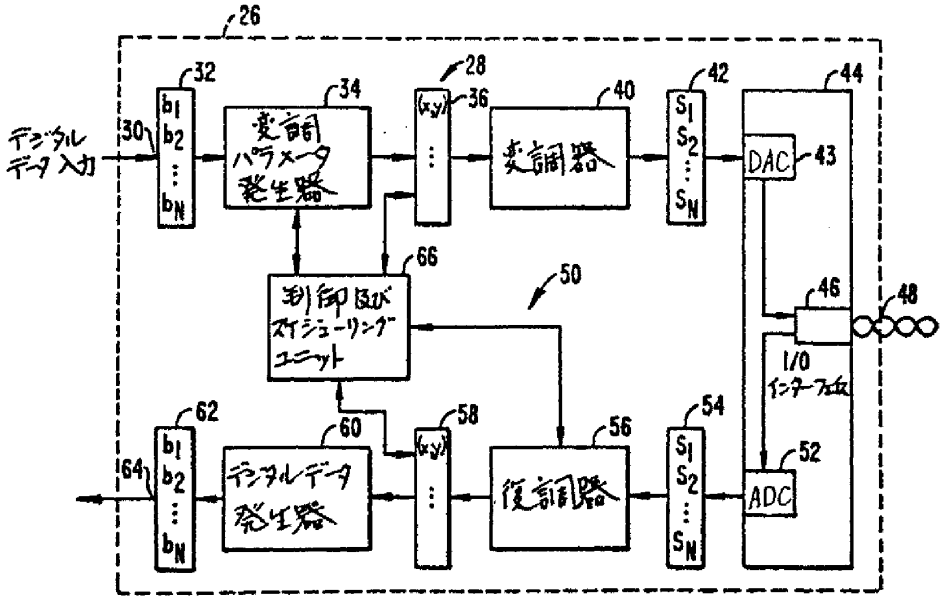

【第９図】

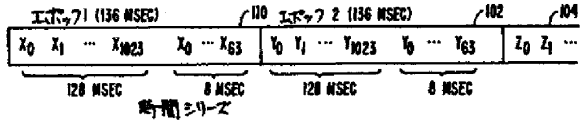

【第４図】

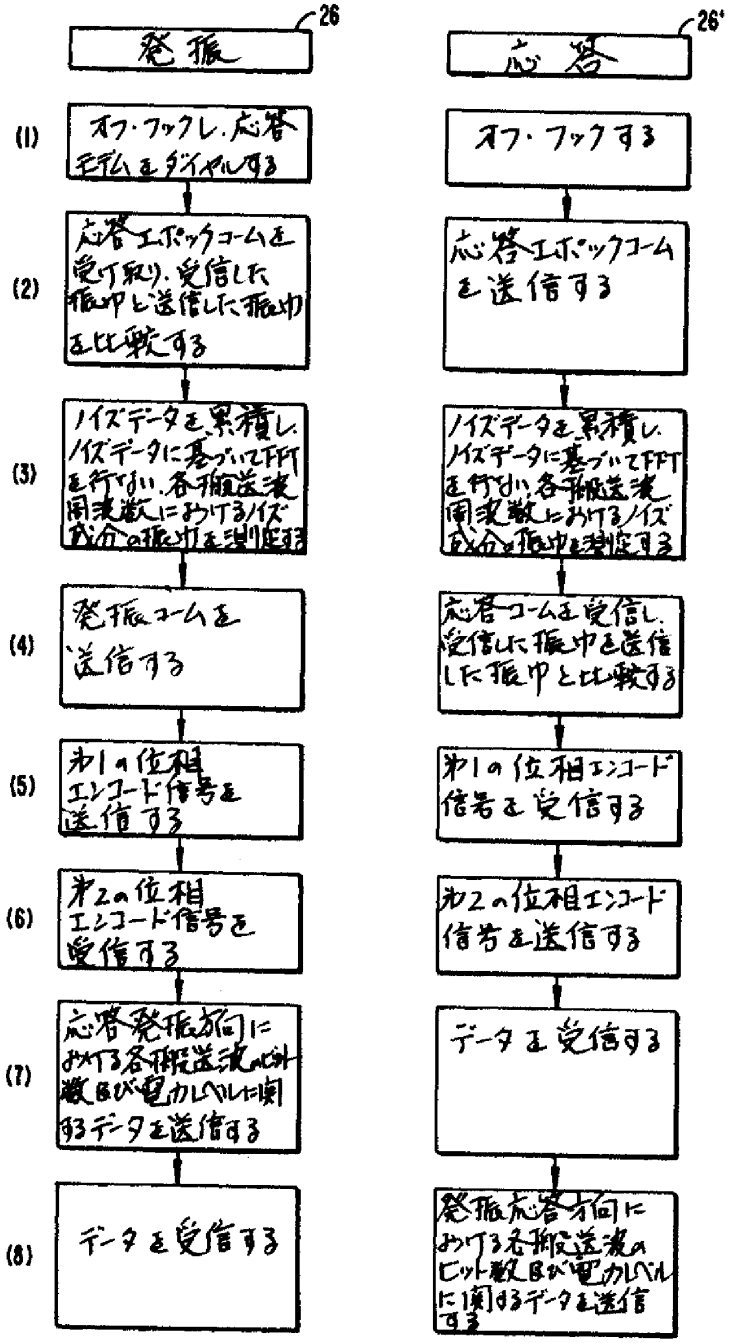
26
発振
26'
応答
(1)
オフ・フックし、応答モデムをダイヤルする
オフ・フックする
(2)
応答エポックコームを受け取り、受信した振巾と送信した振巾を比較する
応答エポックコームを送信する
(3)
ノイズデータを累積し、ノイズデータに基づいてFFTを行ない、各搬送波周波数におけるノイズ成分の振巾を測定する
ノイズデータを累積し、ノイズデータに基づいてFFTを行ない、各搬送波周波数におけるノイズ成分の振巾を測定する
(4)
発振コームを送信する
応答コームを受信し、受信した振巾を送信した振巾と比較する
(5)
第1の位相エンコード信号を送信する
第1の位相エンコード信号を受信する
(6)
第2の位相エンコード信号を受信する
第2の位相エンコード信号を送信する
(7)
応答発振方向における各搬送波のビット数及び電力レベルに関するデータを送信する
データを受信する
(8)
データを受信する
発振応答方向における各搬送波のビット数及び電力レベルに関するデータを送信する

【第５図】

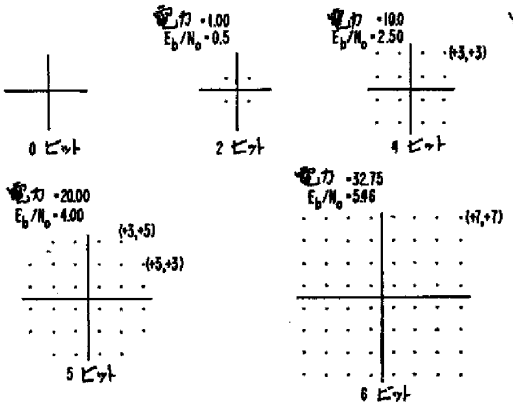

【第６図】

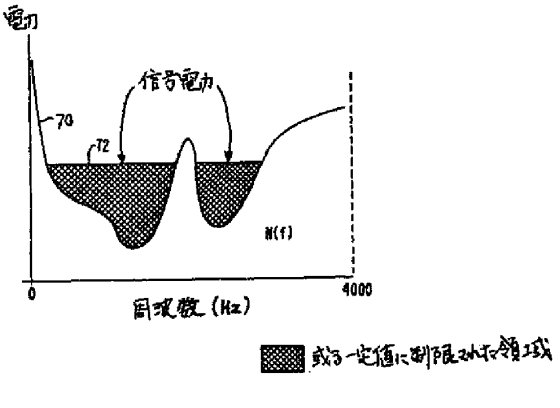

【第７図】

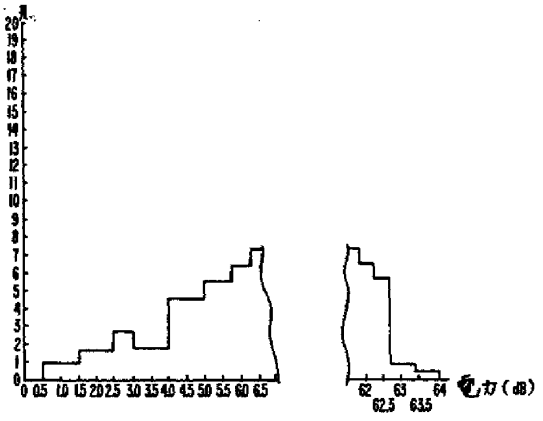

【第１０図】

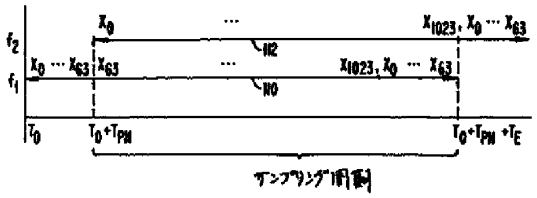

【第８図】

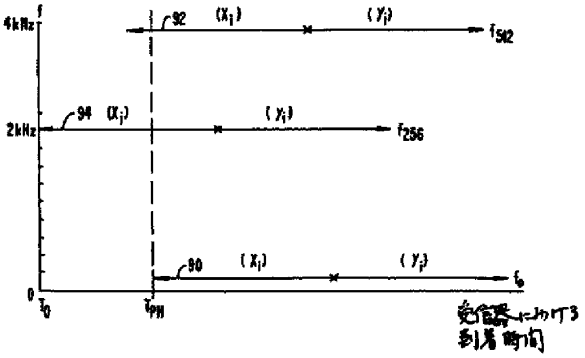

【第１２図】

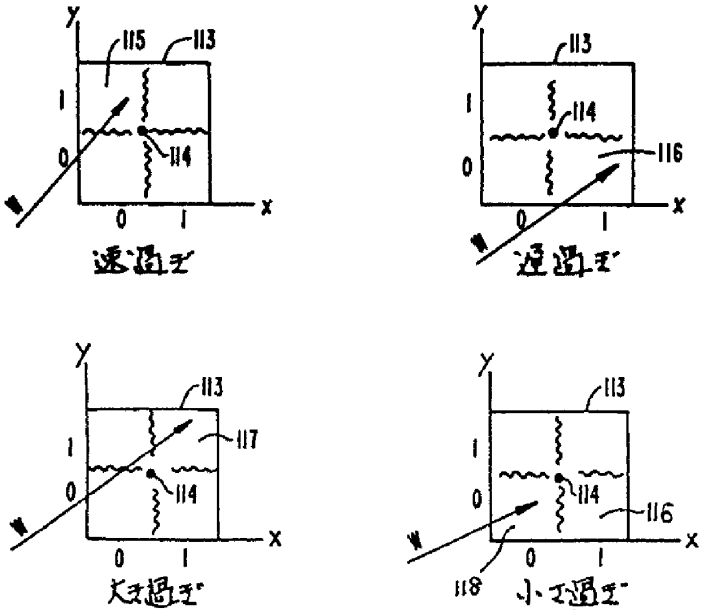
Y
115
113
1
0
114
0
1
X
速過ぎ
Y
113
1
114
116
0
0
1
X
遅過ぎ
Y
113
1
117
0
114
0
1
X
大き過ぎ
Y
113
1
0
114
116
0
1
X
118
小さ過ぎ

【第１３図】

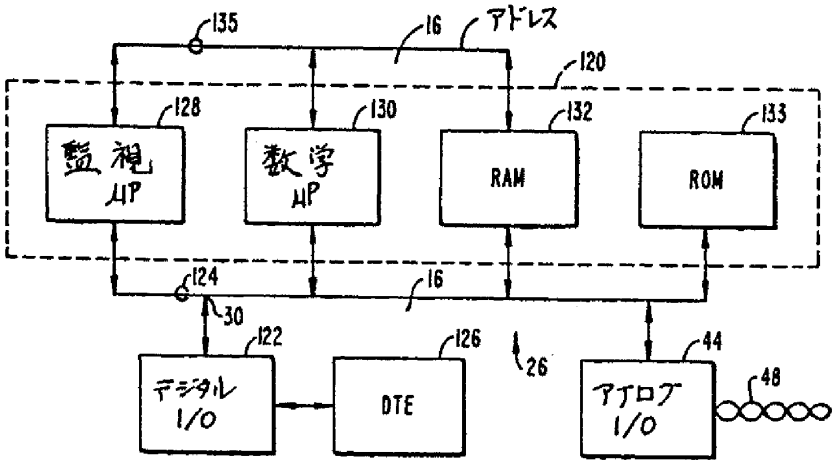
135
16
アドレス
120
128
130
132
133
監視 μP
数学 μP
RAM
ROM
124
16
30
122
126
26
44
48
デジタル I/O
DTE
アナログ I/O

Electronic Acknowledgement Receipt	
EFS ID:	7151383
Application Number:	12477742
International Application Number:	
Confirmation Number:	8072
Title of Invention:	SYSTEM AND METHOD FOR ESTABLISHING A DIAGNOSTIC TRANSMISSION MODE AND COMMUNICATING OVER THE SAME
First Named Inventor/Applicant Name:	David M. Krinsky
Customer Number:	62574
Filer:	Jason Vick/Debra Kesner
Filer Authorized By:	Jason Vick
Attorney Docket Number:	5550-2-CON-2-1
Receipt Date:	05-MAR-2010
Filing Date:	03-JUN-2009
Time Stamp:	15:11:48
Application Type:	Utility under 35 USC 111(a)

Payment information:

Submitted with Payment	no

File Listing:

Document Number	Document Description	File Name	File Size(Bytes)/ Message Digest	Multi Part /.zip	Pages (if appl.)
1		IDS_01.pdf	674994 6390ff0ea54da1c4064e25b1c3079f9467765df8	yes	7

	Multipart Description/PDF files in .zip description			
	Document Description	**Start**	**End**	
	Transmittal Letter	1	3	
	Information Disclosure Statement (IDS) Filed (SB/08)	4	7	
Warnings:				
Information:				
2	Foreign Reference	EP0889615A2.pdf	1848555 931838aa76d186918d6307adbfea64690a80e368	no	34
Warnings:				
Information:				
3	Foreign Reference	GB2303032A.pdf	775828 971ccd21e6ca715331e9fd91a66779a4b3d7a218	no	24
Warnings:				
Information:				
4	Foreign Reference	JP10513622T.pdf	3431375 888b9862465b4615c95ce831cee3890f52d0c1ea	no	145
Warnings:				
Information:				
5	Foreign Reference	JP11261665A.pdf	935881 cfa6958f8b6b879b468fa4f2332329bb306cd9de	no	19
Warnings:				
Information:				
6	Foreign Reference	JP11317723A.pdf	471851 4faff8ed1775109955d76b796b73f4e16bb62b62	no	12
Warnings:				
Information:				
7	Foreign Reference	JP11508417T.pdf	1164326 a3796603ff4abfa9d2beb96f0ab15f9a5a117ff7	no	47
Warnings:				
Information:				
8	Foreign Reference	WO0064130A2.pdf	2380836 8a0213e66164e2b763e631da8dd091e1e12e61f7	no	74
Warnings:				
Information:				

9	Foreign Reference	WO8607223.pdf	2305273 3376921f387058b8b4d2f445ed88e8b477016982	no	53
Warnings:					
Information:					
10	Foreign Reference	WO9701900A1.pdf	1066593 32287592098a865152b537c1ac279cda6fdd099a	no	20
Warnings:					
Information:					
11	Foreign Reference	WO99020027.pdf	3477643 e650eb00032386da3e9b5646deca940758b888d8	no	71
Warnings:					
Information:					
12	Foreign Reference	WO9926375A2.pdf	1458669 94f3868d54ccceb0cb19877c8e7fb749b6637ff7	no	31
Warnings:					
Information:					
13	Foreign Reference	WO9963427A1.pdf	986542 d3d96d3f5ccc62ca2d9be876b4e36d6198fc3662	no	23
Warnings:					
Information:					
14	NPL Documents	Boets_Modeling_Aspect_of_Transmission_Line_Networks.pdf	399671 e5aabc3c165da136812ac990d82068488564dd13	no	6
Warnings:					
Information:					
15	NPL Documents	Cioffi_ADSL_Maintenance_with_DMT_T1E1_4.pdf	764298 a24c4bf9425f10d9789e1f0110fe4fc5429b31c4	no	14
Warnings:					
Information:					
16	NPL Documents	Lewis_Extending_Trouble_Ticket_System_to_Fault_Diagnostics.pdf	801049 16aff63faa90c450f6cb78fdb03c7a26a49d0499	no	8
Warnings:					
Information:					
17	NPL Documents	5550-2-PCT_Search_Report.pdf	156202 ce80d36e54318f42cd19132342bee0ba2645a706	no	4
Warnings:					
Information:					

18	NPL Documents	5550-2-PCT_Written_Opinion.pdf	241613 635fc12cf9d6917802d2146cce503dd896125fd7	no	2
Warnings:					
Information:					
19	NPL Documents	5550-2-PCT_IPER.pdf	85503 dfb67c85e9bdcc84d0df1b969e85eaecf8ee0d83	no	2
Warnings:					
Information:					
20	NPL Documents	5550-2-PCT-3_Search_Report.pdf	146869 884805bc2f978cbd8b79adb5d8e30c17bd636b5f	no	3
Warnings:					
Information:					
21	NPL Documents	5550-2-PAU_OA_4-2-04.pdf	56750 0d254394024b482c9a66a3be9b3129ecfed146fc	no	1
Warnings:					
Information:					
22	NPL Documents	5550-2-PAU_OA_8-6-04.pdf	89133 bbe57d04fd2ca68ddc5f6cee83798870a58fb996	no	2
Warnings:					
Information:					
23	NPL Documents	5550-2-PAU4_Examiners_First_Report_for_AU2004203321_11-16-06.pdf	131297 4ff0b79b6b7cf7cdcb00e51ab03715623ad52424	no	2
Warnings:					
Information:					
24	NPL Documents	5550-2-PAU4-DIV_OA_3-9-09.pdf	72889 2f41e077d06ead84bbb4e4b1ab9c984ffadeea72	no	2
Warnings:					
Information:					
25	NPL Documents	5550-2-PAU-4-DIV_NOA_7-9-09.pdf	64074 314f5bda4dc26bc9ae7148ce5c7b16d51d700128	no	2
Warnings:					
Information:					
26	NPL Documents	5550-2-PEP_OA_12-1-04.pdf	143351 c0d67e7101c9b24ab6ba46b14594788294b2b3fe	no	4
Warnings:					
Information:					

27	NPL Documents	5550-2-PEP_OA_9-14-05.pdf	52815 b7ea017eecfedb028e413830faf6689cdbcb0caf	no	2
Warnings:					
Information:					
28	NPL Documents	5550-2-PEP_NOA_5-15-06.pdf	1363474 b9ad07b60b6f0b36ae37596a08b3e30ea52ed522	no	25
Warnings:					
Information:					
29	NPL Documents	5550-2-PEP5_European_Search_Report_for_EP_06022008_1-8-07.pdf	696810 9ae058a5710f5b8d193a484700c79ac3032c01db	no	8
Warnings:					
Information:					
30	NPL Documents	5550-2-PJP_OA_12-7-09.pdf	325581 9bb7afb456a2a1034a70d0efb7055792dbee6bfd	no	8
Warnings:					
Information:					
31	NPL Documents	5550-2-PKR_NOA_12-1-06.pdf	112458 f51253e094455b82ddcfda340ca66f0571d844f4	no	3
Warnings:					
Information:					
32	NPL Documents	JP_Hei6_1994-003956.pdf	1192136 798b375a7605b669bc529b15224f19aaa9624e95	no	15
Warnings:					
Information:					
33	NPL Documents	5550-2-PCA_OA_11-24-09.pdf	55806 5c821fd147f6f958641910c85b7056edf2845f44	no	2
Warnings:					
Information:					
		Total Files Size (in bytes):	27930145		

This Acknowledgement Receipt evidences receipt on the noted date by the USPTO of the indicated documents, characterized by the applicant, and including page counts, where applicable. It serves as evidence of receipt similar to a Post Card, as described in MPEP 503.

New Applications Under 35 U.S.C. 111
If a new application is being filed and the application includes the necessary components for a filing date (see 37 CFR 1.53(b)-(d) and MPEP 506), a Filing Receipt (37 CFR 1.54) will be issued in due course and the date shown on this Acknowledgement Receipt will establish the filing date of the application.

National Stage of an International Application under 35 U.S.C. 371
If a timely submission to enter the national stage of an international application is compliant with the conditions of 35 U.S.C. 371 and other applicable requirements a Form PCT/DO/EO/903 indicating acceptance of the application as a national stage submission under 35 U.S.C. 371 will be issued in addition to the Filing Receipt, in due course.

New International Application Filed with the USPTO as a Receiving Office
If a new international application is being filed and the international application includes the necessary components for an international filing date (see PCT Article 11 and MPEP 1810), a Notification of the International Application Number and of the International Filing Date (Form PCT/RO/105) will be issued in due course, subject to prescriptions concerning national security, and the date shown on this Acknowledgement Receipt will establish the international filing date of the application.

IN THE UNITED STATES PATENT AND TRADEMARK OFFICE

In Re the Application of:	)	Group Art Unit: 2611
David M. Krinsky	)	Confirmation No.: 8072
Serial No.: 12/477,742	)	Examiner: Not yet assigned
Filed: June 3, 2009	)	
Atty. File No.: 5550-2-CON-2-1	)	INFORMATION DISCLOSURE STATEMENT
Entitled: "System and Method for Establishing a Diagnostic Transmission Mode and Communicating Over the Same "	)	Electronically Submitted

Commissioner for Patents
P.O. Box 1450
Alexandria, VA 22313-1450

Dear Sir:

The references cited on attached Form PTO-1449 are being called to the attention of the Examiner.

☒ Copies of the cited non-patent and/or foreign references are enclosed herewith.

☐ Copies of the cited U.S. patents and/or patent applications are enclosed herewith.

☒ Copies of the cited U.S. patents/patent application publications are not enclosed in accordance with 37 C.F.R. § 1.98(a).

☐ Copies of the cited references are not enclosed, in accordance with 37 C.F.R. § 1.98(d), because the references were cited by or submitted to the U.S. Patent and Trademark Office in prior application Serial No. _____ filed _____, which is relied upon for an earlier filing date under 35 U.S.C. § 120.

☒ To the best of applicants' belief, the pertinence of the foreign-language references are believed to be summarized in the attached English abstracts and in the figures, although applicants do not necessarily vouch for the accuracy of the translation.

☒ Examiner's attention is drawn to the following related applications:

Serial No. 10/619691 filed 07-16-2003, now U.S. Patent No. 7570686 (Attorney's Ref. No. 5550-2-CON-2)

Serial No. 09/755173 filed 01-08-2001, now U.S. Patent No. 6658052 (Attorney's Ref. No. 5550-2)

☐ Other:_____

Submission of the above information is not intended as an admission that any item is citable under the statutes or rules to support a rejection, that any item disclosed represents analogous art, or that those skilled in the art would refer to or recognize the pertinence of any reference without the benefit of hindsight, nor should an inference be drawn as to the pertinence of the references based on the order in which they are presented. Submission of this statement should not be taken as an indication that a search has been conducted, or that no better art exists.

It is respectfully requested that the cited information be expressly considered during the prosecution of this application and the references made of record therein.

FEES

☒	**37 CFR 1.97(b)**: No fee is believed due in connection with this submission, because the information disclosure statement submitted herewith is satisfied by one of the following conditions ("X" indicates satisfaction): ☐ Within three months of the filing date of a national application other than a continued prosecution application under 37 CFR 1.53(d), or ☐ Within three months of the date of entry into the national stage of an international application as set forth in 37 CFR 1.491 or ☒ Before the mailing date of a first Office Action on the merits, or ☐ Before the mailing of a first Office action after the filing of a request for continued examination under 37 CFR 1.114. Although no fee is believed due, if any fee is deemed due in connection with this submission, please charge such fee to Deposit Account 19-1970.
☐	**37 CFR 1.97(c)**: The information disclosure statement transmitted herewith is being filed after all the above conditions (37 CFR 1.97(b)), but before the mailing date of one of the following conditions: (1) a final action under 37 C.F.R. 1.113 or (2) a notice of allowance under 37 C.F.R. 1.311, or (3) an action that otherwise closes prosecution in the application. This Information Disclosure Statement is accompanied by: ☐ A Certification (below) as specified by 37 C.F.R. 1.97(e). Although no fee is believed due, if any fee is deemed due in connection with this submission, please charge such fee to Deposit Account 19-1970. OR ☐ Please charge Deposit Account 19-1970 in the amount of $180.00 for the fee set forth in 37 C.F.R. 1.17(p) for submission of an information disclosure statement. Please credit any overpayment or charge any underpayment to Deposit Account 19-1970.
☐	**37 CFR 1.97(d)**: This Information Disclosure Statement is being submitted after the period specified in 37 CFR 1.97(c). ☐ This information Disclosure Statement includes a Certification (below) as specified by 37 C.F.R. 1.97(e) AND ☐ Applicants hereby requests consideration of the reference(s) disclosed herein. Please charge Deposit Account 19-1970 in the amount of $180.00 under 37 C.F.R. 1.17(p). Please credit any overpayment or charge any underpayment to Deposit Account 19-1970. Election to pay the fee should not be taken as an indication that applicant(s) cannot execute a certification.

Certification (37 C.F.R. 1.97(e))
(Applicable only if checked)

☐ The undersigned certifies that:

☐ Each item of information contained in this information disclosure statement was first cited in any communication from a foreign patent office in a counterpart foreign application not more than three months prior to the filing of this statement. 37 C.F.R. 1.97(e)(1).

☐ A copy of the communication from the foreign patent office is enclosed.

OR

☐ No item of information contained in this information disclosure statement was cited in a communication from a foreign patent office in a counterpart foreign application, and, to the knowledge of the undersigned after making reasonable inquiry, no item of information contained in this Information Disclosure Statement was known to any individual designated in 37 C.F.R. 1.56(c) more than three months prior to the filing of this statement. 37 C.F.R. 1.97(e)(2).

Respectfully submitted,

SHERIDAN ROSS P.C.

By: _____

Jason H. Vick
Registration No. 45,285
1560 Broadway, Suite 1200
Denver, Colorado 80202-5141
(303) 863-9700

Date: 5 Mar '10

UNITED STATES PATENT AND TRADEMARK OFFICE

UNITED STATES DEPARTMENT OF COMMERCE
United States Patent and Trademark Office
Address: COMMISSIONER FOR PATENTS
P.O. Box 1450
Alexandria, Virginia 22313-1450
www.uspto.gov

APPLICATION NUMBER	FILING OR 371(C) DATE	FIRST NAMED APPLICANT	ATTY. DOCKET NO./TITLE
12/477,742	06/03/2009	David M. Krinsky	5550-2-CON-2-1

CONFIRMATION NO. 8072

62574
Jason H. Vick
Sheridan Ross, PC
Suite # 1200
1560 Broadway
Denver, CO 80202

PUBLICATION NOTICE

OC000000037957432

Title:SYSTEM AND METHOD FOR ESTABLISHING A DIAGNOSTIC TRANSMISSION MODE AND COMMUNICATING OVER THE SAME

Publication No.US-2009-0238254-A1
Publication Date:09/24/2009

NOTICE OF PUBLICATION OF APPLICATION

The above-identified application will be electronically published as a patent application publication pursuant to 37 CFR 1.211, et seq. The patent application publication number and publication date are set forth above.

The publication may be accessed through the USPTO's publically available Searchable Databases via the Internet at www.uspto.gov. The direct link to access the publication is currently http://www.uspto.gov/patft/.

The publication process established by the Office does not provide for mailing a copy of the publication to applicant. A copy of the publication may be obtained from the Office upon payment of the appropriate fee set forth in 37 CFR 1.19(a)(1). Orders for copies of patent application publications are handled by the USPTO's Office of Public Records. The Office of Public Records can be reached by telephone at (703) 308-9726 or (800) 972-6382, by facsimile at (703) 305-8759, by mail addressed to the United States Patent and Trademark Office, Office of Public Records, Alexandria, VA 22313-1450 or via the Internet.

In addition, information on the status of the application, including the mailing date of Office actions and the dates of receipt of correspondence filed in the Office, may also be accessed via the Internet through the Patent Electronic Business Center at www.uspto.gov using the public side of the Patent Application Information and Retrieval (PAIR) system. The direct link to access this status information is currently http://pair.uspto.gov/. Prior to publication, such status information is confidential and may only be obtained by applicant using the private side of PAIR.

Further assistance in electronically accessing the publication, or about PAIR, is available by calling the Patent Electronic Business Center at 1-866-217-9197.

Office of Data Managment, Application Assistance Unit (571) 272-4000, or (571) 272-4200, or 1-888-786-0101

UNITED STATES PATENT AND TRADEMARK OFFICE

UNITED STATES DEPARTMENT OF COMMERCE
United States Patent and Trademark Office
Address: COMMISSIONER FOR PATENTS
P.O. Box 1450
Alexandria, Virginia 22313-1450
www.uspto.gov

APPLICATION NUMBER	FILING OR 371(C) DATE	FIRST NAMED APPLICANT	ATTY. DOCKET NO./TITLE
12/477,742	06/03/2009	David M. Krinsky	5550-2-CON-2-1

CONFIRMATION NO. 8072

POA ACCEPTANCE LETTER

62574
Jason H. Vick
Sheridan Ross, PC
Suite # 1200
1560 Broadway
Denver, CO 80202

Date Mailed: 07/24/2009

NOTICE OF ACCEPTANCE OF POWER OF ATTORNEY

This is in response to the Power of Attorney filed 07/17/2009.

The Power of Attorney in this application is accepted. Correspondence in this application will be mailed to the above address as provided by 37 CFR 1.33.

/mteklemichael/

Office of Data Management, Application Assistance Unit (571) 272-4000, or (571) 272-4200, or 1-888-786-0101

PTO/SB/80 (01-06)
Approved for use through 12/31/2008. OMB 0651-0035
U.S. Patent and Trademark Office; U.S. DEPARTMENT OF COMMERCE
Under the Paperwork Reduction Act of 1995, no persons are required to respond to a collection of information unless it displays a valid OMB control number.

POWER OF ATTORNEY TO PROSECUTE APPLICATIONS BEFORE THE USPTO

I hereby revoke all previous powers of attorney given in the application identified in the attached statement under 37 CFR 3.73(b).

I hereby appoint:

☑ Practitioners associated with the Customer Number: 62574

OR

☐ Practitioner(s) named below (If more than ten patent practitioners are to be named, then a customer number must be used):

Name	Registration Number	Name	Registration Number

as attorney(s) or agent(s) to represent the undersigned before the United States Patent and Trademark Office (USPTO) in connection with any and all patent applications assigned only to the undersigned according to the USPTO assignment records or assignment documents attached to this form in accordance with 37 CFR 3.73(b).

Please change the correspondence address for the application identified in the attached statement under 37 CFR 3.73(b) to:

☑ The address associated with Customer Number: 62574

OR

☐ Firm or Individual Name			
Address			
City		State	Zip
Country			
Telephone		Email	

Assignee Name and Address:

AWARE, INC.
40 Middlesex Turnpike
Bedford, MA 07130-1423

A copy of this form, together with a statement under 37 CFR 3.73(b) (Form PTO/SB/96 or equivalent) is required to be filed in each application in which this form is used. The statement under 37 CFR 3.73(b) may be completed by one of the practitioners appointed in this form if the appointed practitioner is authorized to act on behalf of the assignee, and must identify the application in which this Power of Attorney is to be filed.

SIGNATURE of Assignee of Record
The individual whose signature and title is supplied below is authorized to act on behalf of the assignee

Signature	Kevin T. Russell	Date	1/8/09
Name	Kevin T. Russell	Telephone	781-687-1335
Title	VP, General Counsel		

This collection of information is required by 37 CFR 1.31, 1.32 and 1.33. The information is required to obtain or retain a benefit by the public which is to file (and by the USPTO to process) an application. Confidentiality is governed by 35 U.S.C. 122 and 37 CFR 1.11 and 1.14. This collection is estimated to take 3 minutes to complete, including gathering, preparing, and submitting the completed application form to the USPTO. Time will vary depending upon the individual case. Any comments on the amount of time you require to complete this form and/or suggestions for reducing this burden, should be sent to the Chief Information Officer, U.S. Patent and Trademark Office, U.S. Department of Commerce, P.O. Box 1450, Alexandria, VA 22313-1450. DO NOT SEND FEES OR COMPLETED FORMS TO THIS ADDRESS. **SEND TO: Commissioner for Patents, P.O. Box 1450, Alexandria, VA 22313-1450.**

If you need assistance in completing the form, call 1-800-PTO-9199 and select option 2.

Electronic Acknowledgement Receipt	
EFS ID:	5727442
Application Number:	12477742
International Application Number:	
Confirmation Number:	8072
Title of Invention:	SYSTEM AND METHOD FOR ESTABLISHING A DIAGNOSTIC TRANSMISSION MODE AND COMMUNICATING OVER THE SAME
First Named Inventor/Applicant Name:	David M. Krinsky
Customer Number:	62574
Filer:	Jason Vick/Joanne Vos
Filer Authorized By:	Jason Vick
Attorney Docket Number:	5550-2-CON-2-1
Receipt Date:	17-JUL-2009
Filing Date:	03-JUN-2009
Time Stamp:	19:07:54
Application Type:	Utility under 35 USC 111(a)

Payment information:

Submitted with Payment	no

File Listing:

Document Number	Document Description	File Name	File Size(Bytes)/ Message Digest	Multi Part /.zip	Pages (if appl.)
1	Assignee showing of ownership per 37 CFR 3.73(b).	20090717_Statement_Under_373b.pdf	266133 1dd0970715943af9643e48850343ebd15912a1d5	no	2

Warnings:
Information:

2	Power of Attorney	20090717_Executed_POA.pdf	139526 30a6d2a734b33f20d326264298e1e240ef6b1d32	no	1

Warnings:	
Information:	
Total Files Size (in bytes):	405659

This Acknowledgement Receipt evidences receipt on the noted date by the USPTO of the indicated documents, characterized by the applicant, and including page counts, where applicable. It serves as evidence of receipt similar to a Post Card, as described in MPEP 503.

New Applications Under 35 U.S.C. 111
If a new application is being filed and the application includes the necessary components for a filing date (see 37 CFR 1.53(b)-(d) and MPEP 506), a Filing Receipt (37 CFR 1.54) will be issued in due course and the date shown on this Acknowledgement Receipt will establish the filing date of the application.

National Stage of an International Application under 35 U.S.C. 371
If a timely submission to enter the national stage of an international application is compliant with the conditions of 35 U.S.C. 371 and other applicable requirements a Form PCT/DO/EO/903 indicating acceptance of the application as a national stage submission under 35 U.S.C. 371 will be issued in addition to the Filing Receipt, in due course.

New International Application Filed with the USPTO as a Receiving Office
If a new international application is being filed and the international application includes the necessary components for an international filing date (see PCT Article 11 and MPEP 1810), a Notification of the International Application Number and of the International Filing Date (Form PCT/RO/105) will be issued in due course, subject to prescriptions concerning national security, and the date shown on this Acknowledgement Receipt will establish the international filing date of the application.

PTO/SB/96 (06-09)
Approved for use through 07/31/2009. OMB 0651-0031
U.S. Patent and Trademark Office; U.S. DEPARTMENT OF COMMERCE
Under the Paperwork Reduction Act of 1995, no persons are required to respond to a collection of information unless it displays a valid OMB control number.

STATEMENT UNDER 37 CFR 3.73(b)

Applicant/Patent Owner: David M. Krinsky; Robert Edmund Pizzano, Jr.

Application No./Patent No.: 12/477,742 Filed/Issue Date: June 3, 2009

Titled: System and Method for Establishing a Diagnostic Transmission Mode and Communicating Over the Same

Aware, Inc. , a Corporation

(Name of Assignee) (Type of Assignee, e.g., corporation, partnership, university, government agency, etc.

states that it is:

1. ☒ the assignee of the entire right, title, and interest in;

2. ☐ an assignee of less than the entire right, title, and interest in (The extent (by percentage) of its ownership interest is _____ %); or

3. ☐ the assignee of an undivided interest in the entirety of (a complete assignment from one of the joint inventors was made)

the patent application/patent identified above, by virtue of either:

A. ☒ An assignment from the inventor(s) of the patent application/patent identified above. The assignment was recorded in the United States Patent and Trademark Office at Reel 012216, Frame 0842, or for which a copy therefore is attached.

OR

B. ☐ A chain of title from the inventor(s), of the patent application/patent identified above, to the current assignee as follows:

1. From: _____ To: _____

The document was recorded in the United States Patent and Trademark Office at

Reel _____, Frame _____, or for which a copy thereof is attached.

2. From: _____ To: _____

The document was recorded in the United States Patent and Trademark Office at

Reel _____, Frame _____, or for which a copy thereof is attached.

3. From: _____ To: _____

The document was recorded in the United States Patent and Trademark Office at

Reel _____, Frame _____, or for which a copy thereof is attached.

☐ Additional documents in the chain of title are listed on a supplemental sheet(s).

☒ As required by 37 CFR 3.73(b)(1)(i), the documentary evidence of the chain of title from the original owner to the assignee was, or concurrently is being, submitted for recordation pursuant to 37 CFR 3.11.

[NOTE: A separate copy (*i.e.*, a true copy of the original assignment document(s)) must be submitted to Assignment Division in accordance with 37 CFR Part 3, to record the assignment in the records of the USPTO. See MPEP 302.08]

The undersigned (whose title is supplied below) is authorized to act on behalf of the assignee.

Signature — 17 Jul '09 Date

Jason H. Vick — Printed or Typed Name

Attorney for Assignee — Title

This collection of information is required by 37 CFR 3.73(b). The information is required to obtain or retain a benefit by the public which is to file (and by the USPTO to process) an application. Confidentiality is governed by 35 U.S.C. 122 and 37 CFR 1.11 and 1.14. This collection is estimated to take 12 minutes to complete, including gathering, preparing, and submitting the completed application form to the USPTO. Time will vary depending upon the individual case. Any comments on the amount of time you require to complete this form and/or suggestions for reducing this burden, should be sent to the Chief Information Officer, U.S. Patent and Trademark Office, U.S. Department of Commerce, P.O. Box 1450, Alexandria, VA 22313-1450. DO NOT SEND FEES OR COMPLETED FORMS TO THIS ADDRESS. **SEND TO: Commissioner for Patents, P.O. Box 1450, Alexandria, VA 22313-1450.**

If you need assistance in completing the form, call 1-800-PTO-9199 and select option 2.

Privacy Act Statement

The **Privacy Act of 1974 (P.L. 93-579)** requires that you be given certain information in connection with your submission of the attached form related to a patent application or patent. Accordingly, pursuant to the requirements of the Act, please be advised that: (1) the general authority for the collection of this information is 35 U.S.C. 2(b)(2); (2) furnishing of the information solicited is voluntary; and (3) the principal purpose for which the information is used by the U.S. Patent and Trademark Office is to process and/or examine your submission related to a patent application or patent. If you do not furnish the requested information, the U.S. Patent and Trademark Office may not be able to process and/or examine your submission, which may result in termination of proceedings or abandonment of the application or expiration of the patent.

The information provided by you in this form will be subject to the following routine uses:

1. The information on this form will be treated confidentially to the extent allowed under the Freedom of Information Act (5 U.S.C. 552) and the Privacy Act (5 U.S.C 552a). Records from this system of records may be disclosed to the Department of Justice to determine whether disclosure of these records is required by the Freedom of Information Act.
2. A record from this system of records may be disclosed, as a routine use, in the course of presenting evidence to a court, magistrate, or administrative tribunal, including disclosures to opposing counsel in the course of settlement negotiations.
3. A record in this system of records may be disclosed, as a routine use, to a Member of Congress submitting a request involving an individual, to whom the record pertains, when the individual has requested assistance from the Member with respect to the subject matter of the record.
4. A record in this system of records may be disclosed, as a routine use, to a contractor of the Agency having need for the information in order to perform a contract. Recipients of information shall be required to comply with the requirements of the Privacy Act of 1974, as amended, pursuant to 5 U.S.C. 552a(m).
5. A record related to an International Application filed under the Patent Cooperation Treaty in this system of records may be disclosed, as a routine use, to the International Bureau of the World Intellectual Property Organization, pursuant to the Patent Cooperation Treaty.
6. A record in this system of records may be disclosed, as a routine use, to another federal agency for purposes of National Security review (35 U.S.C. 181) and for review pursuant to the Atomic Energy Act (42 U.S.C. 218(c)).
7. A record from this system of records may be disclosed, as a routine use, to the Administrator, General Services, or his/her designee, during an inspection of records conducted by GSA as part of that agency's responsibility to recommend improvements in records management practices and programs, under authority of 44 U.S.C. 2904 and 2906. Such disclosure shall be made in accordance with the GSA regulations governing inspection of records for this purpose, and any other relevant (*i.e.*, GSA or Commerce) directive. Such disclosure shall not be used to make determinations about individuals.
8. A record from this system of records may be disclosed, as a routine use, to the public after either publication of the application pursuant to 35 U.S.C. 122(b) or issuance of a patent pursuant to 35 U.S.C. 151. Further, a record may be disclosed, subject to the limitations of 37 CFR 1.14, as a routine use, to the public if the record was filed in an application which became abandoned or in which the proceedings were terminated and which application is referenced by either a published application, an application open to public inspection or an issued patent.
9. A record from this system of records may be disclosed, as a routine use, to a Federal, State, or local law enforcement agency, if the USPTO becomes aware of a violation or potential violation of law or regulation.

UNITED STATES PATENT AND TRADEMARK OFFICE

UNITED STATES DEPARTMENT OF COMMERCE
United States Patent and Trademark Office
Address: COMMISSIONER FOR PATENTS
P.O. Box 1450
Alexandria, Virginia 22313-1450
www.uspto.gov

APPLICATION NUMBER	FILING or 371(c) DATE	GRP ART UNIT	FIL FEE REC'D	ATTY.DOCKET.NO	TOT CLAIMS	IND CLAIMS
12/477,742	06/03/2009	2614	1090	5550-2-CON-2-1	3	3

CONFIRMATION NO. 8072

62574
Jason H. Vick
Sheridan Ross, PC
Suite # 1200
1560 Broadway
Denver, CO 80202

FILING RECEIPT

OC000000036404201

Date Mailed: 06/17/2009

Receipt is acknowledged of this non-provisional patent application. The application will be taken up for examination in due course. Applicant will be notified as to the results of the examination. Any correspondence concerning the application must include the following identification information: the U.S. APPLICATION NUMBER, FILING DATE, NAME OF APPLICANT, and TITLE OF INVENTION. Fees transmitted by check or draft are subject to collection. Please verify the accuracy of the data presented on this receipt. **If an error is noted on this Filing Receipt, please submit a written request for a Filing Receipt Correction. Please provide a copy of this Filing Receipt with the changes noted thereon. If you received a "Notice to File Missing Parts" for this application, please submit any corrections to this Filing Receipt with your reply to the Notice. When the USPTO processes the reply to the Notice, the USPTO will generate another Filing Receipt incorporating the requested corrections**

Applicant(s)

David M. Krinsky, Acton, MA;
Robert Edmund Pizzano Jr., Stoneham, MA;

Assignment For Published Patent Application

AWARE, INC., Bedford, MA

Power of Attorney: None

Domestic Priority data as claimed by applicant

This application is a CON of 10/619,691 07/16/2003 *
which is a DIV of 09/755,173 01/08/2001 PAT 6,658,052
which claims benefit of 60/224,308 08/10/2000
and claims benefit of 60/174,865 01/07/2000 *
(*)Data provided by applicant is not consistent with PTO records.

Foreign Applications

If Required, Foreign Filing License Granted: 06/10/2009

The country code and number of your priority application, to be used for filing abroad under the Paris Convention, is **US 12/477,742**

Projected Publication Date: 09/24/2009

Non-Publication Request: No

Early Publication Request: No

Title

SYSTEM AND METHOD FOR ESTABLISHING A DIAGNOSTIC TRANSMISSION MODE AND COMMUNICATING OVER THE SAME

Preliminary Class

379

PROTECTING YOUR INVENTION OUTSIDE THE UNITED STATES

Since the rights granted by a U.S. patent extend only throughout the territory of the United States and have no effect in a foreign country, an inventor who wishes patent protection in another country must apply for a patent in a specific country or in regional patent offices. Applicants may wish to consider the filing of an international application under the Patent Cooperation Treaty (PCT). An international (PCT) application generally has the same effect as a regular national patent application in each PCT-member country. The PCT process **simplifies** the filing of patent applications on the same invention in member countries, but **does not result** in a grant of "an international patent" and does not eliminate the need of applicants to file additional documents and fees in countries where patent protection is desired.

Almost every country has its own patent law, and a person desiring a patent in a particular country must make an application for patent in that country in accordance with its particular laws. Since the laws of many countries differ in various respects from the patent law of the United States, applicants are advised to seek guidance from specific foreign countries to ensure that patent rights are not lost prematurely.

Applicants also are advised that in the case of inventions made in the United States, the Director of the USPTO must issue a license before applicants can apply for a patent in a foreign country. The filing of a U.S. patent application serves as a request for a foreign filing license. The application's filing receipt contains further information and guidance as to the status of applicant's license for foreign filing.

Applicants may wish to consult the USPTO booklet, "General Information Concerning Patents" (specifically, the section entitled "Treaties and Foreign Patents") for more information on timeframes and deadlines for filing foreign patent applications. The guide is available either by contacting the USPTO Contact Center at 800-786-9199, or it can be viewed on the USPTO website at http://www.uspto.gov/web/offices/pac/doc/general/index.html.

For information on preventing theft of your intellectual property (patents, trademarks and copyrights), you may wish to consult the U.S. Government website, http://www.stopfakes.gov. Part of a Department of Commerce initiative, this website includes self-help "toolkits" giving innovators guidance on how to protect intellectual property in specific countries such as China, Korea and Mexico. For questions regarding patent enforcement issues, applicants may call the U.S. Government hotline at 1-866-999-HALT (1-866-999-4158).

LICENSE FOR FOREIGN FILING UNDER

Title 35, United States Code, Section 184

Title 37, Code of Federal Regulations, 5.11 & 5.15

GRANTED

The applicant has been granted a license under 35 U.S.C. 184, if the phrase "IF REQUIRED, FOREIGN FILING LICENSE GRANTED" followed by a date appears on this form. Such licenses are issued in all applications where

the conditions for issuance of a license have been met, regardless of whether or not a license may be required as set forth in 37 CFR 5.15. The scope and limitations of this license are set forth in 37 CFR 5.15(a) unless an earlier license has been issued under 37 CFR 5.15(b). The license is subject to revocation upon written notification. The date indicated is the effective date of the license, unless an earlier license of similar scope has been granted under 37 CFR 5.13 or 5.14.

This license is to be retained by the licensee and may be used at any time on or after the effective date thereof unless it is revoked. This license is automatically transferred to any related applications(s) filed under 37 CFR 1.53(d). This license is not retroactive.

The grant of a license does not in any way lessen the responsibility of a licensee for the security of the subject matter as imposed by any Government contract or the provisions of existing laws relating to espionage and the national security or the export of technical data. Licensees should apprise themselves of current regulations especially with respect to certain countries, of other agencies, particularly the Office of Defense Trade Controls, Department of State (with respect to Arms, Munitions and Implements of War (22 CFR 121-128)); the Bureau of Industry and Security, Department of Commerce (15 CFR parts 730-774); the Office of Foreign AssetsControl, Department of Treasury (31 CFR Parts 500+) and the Department of Energy.

NOT GRANTED

No license under 35 U.S.C. 184 has been granted at this time, if the phrase "IF REQUIRED, FOREIGN FILING LICENSE GRANTED" DOES NOT appear on this form. Applicant may still petition for a license under 37 CFR 5.12, if a license is desired before the expiration of 6 months from the filing date of the application. If 6 months has lapsed from the filing date of this application and the licensee has not received any indication of a secrecy order under 35 U.S.C. 181, the licensee may foreign file the application pursuant to 37 CFR 5.15(b).

UNITED STATES PATENT AND TRADEMARK OFFICE

UNITED STATES DEPARTMENT OF COMMERCE
United States Patent and Trademark Office
Address: COMMISSIONER FOR PATENTS
P.O. Box 1450
Alexandria, Virginia 22313-1450
www.uspto.gov

APPLICATION NUMBER	FILING OR 371(C) DATE	FIRST NAMED APPLICANT	ATTY. DOCKET NO./TITLE
12/477,742	06/03/2009	David M. Krinsky	5550-2-CON-2-1

CONFIRMATION NO. 8072

IMPROPER CPOA LETTER

62574
Jason H. Vick
Sheridan Ross, PC
Suite # 1200
1560 Broadway
Denver, CO 80202

OC000000036403949

Date Mailed: 06/17/2009

NOTICE REGARDING POWER OF ATTORNEY

This is in response to the Power of Attorney filed 06/03/2009. The Power of Attorney in this application is not accepted for the reason(s) listed below:

- The Power of Attorney you provided did not comply with the new Power of Attorney rules that became effective on June 25, 2004. See 37 CFR 1.32.

/ttran/

Office of Data Management, Application Assistance Unit (571) 272-4000, or (571) 272-4200, or 1-888-786-0101

IN THE UNITED STATES PATENT AND TRADEMARK OFFICE

In Re the Application of:	KRINSKY et al.	)	Group Art Unit:
		)	Examiner:
Application No.:	Not yet assigned	)	Confirmation No.:
Filed:	Herewith	)	
Atty. File No.:	5550-2-CON-2-1	)	
For: "SYSTEM AND METHOD FOR ESTABLISHING A DIAGNOSTIC TRANSMISSION MODE AND COMMUNICATING OVER THE SAME"		)	

Commissioner for Patents
P.O. Box 1450
Alexandria, VA 22313

PRELIMINARY AMENDMENT

Dear Sir:

Prior to the initial review of the above-identified patent application by the Examiner, please enter the following Preliminary Amendment. Although Applicants do not believe that any fees are due based upon the filing of this Preliminary Amendment, please charge any such fees to Deposit Account 19-1970.

Please amend the above-identified patent application as follows:

AMENDMENTS TO THE CLAIMS:

This listing of claims will replace all prior versions, and listings, of claims in the application.

Listing of Claims:

1. – 43. (Cancelled)

44. (New) A transceiver capable of communicating diagnostic information over a communication channel using multicarrier modulation comprising:

a transmitter portion that communicates a diagnostic message comprising a plurality of data variables representing the diagnostic information, wherein each bit in the diagnostic message is mapped to at least one DMT symbol, wherein one variable comprises an array representing frequency domain received idle channel noise information.

45. (New) Means for communicating diagnostic information over a communication channel using multicarrier modulation comprising:

means for communicating from a transceiver a diagnostic message comprising a plurality of data variables representing the diagnostic information, wherein each bit in the diagnostic message is mapped to at least one DMT symbol, wherein one variable comprises an array representing frequency domain received idle channel noise information.

46. (New) A computer-readable storage media including information that if executed communicates diagnostic information over a communication channel using multicarrier modulation comprising:

information that communicates from a transceiver a diagnostic message comprising a plurality of data variables representing the diagnostic information, wherein each bit in the diagnostic message is mapped to at least one DMT symbol, wherein one variable comprises an array representing frequency domain received idle channel noise information.

REMARKS/ARGUMENTS

Claims 1-43 are canceled without prejudice or disclaimer.

New claims 44-46 are directed to additional aspects of the invention and are presented for examination on the merits.

Applicant believes that the pending claims are in condition for allowance and such disposition is respectfully requested. In the event that a telephone conversation would further prosecution and/or expedite allowance, the Examiner is invited to contact the undersigned.

Respectfully submitted,

SHERIDAN ROSS P.C.

By: _____

Jason H. Vick
Registration No. 45,285
1560 Broadway, Suite 1200
Denver, Colorado 80202-5141
(303) 863-9700

Date: 3 Jan 07

Electronic Patent Application Fee Transmittal	
Application Number:	
Filing Date:	
Title of Invention:	SYSTEM AND METHOD FOR ESTABLISHING A DIAGNOSTIC TRANSMISSION MODE AND COMMUNICATING OVER THE SAME
First Named Inventor/Applicant Name:	David M. Krinsky
Filer:	Jason Vick/Christine Jacquet
Attorney Docket Number:	5550-2-CON-2-1
Filed as Large Entity	

Utility under 35 USC 111(a) Filing Fees

Description	Fee Code	Quantity	Amount	Sub-Total in USD($)
Basic Filing:				
Utility application filing	1011	1	330	330
Utility Search Fee	1111	1	540	540
Utility Examination Fee	1311	1	220	220
Pages:				
Claims:				
Miscellaneous-Filing:				
Petition:				
Patent-Appeals-and-Interference:				

Description	Fee Code	Quantity	Amount	Sub-Total in USD($)
Post-Allowance-and-Post-Issuance:				
Extension-of-Time:				
Miscellaneous:				
		Total in USD ($)		**1090**

Electronic Acknowledgement Receipt	
EFS ID:	5449147
Application Number:	12477742
International Application Number:	
Confirmation Number:	8072
Title of Invention:	SYSTEM AND METHOD FOR ESTABLISHING A DIAGNOSTIC TRANSMISSION MODE AND COMMUNICATING OVER THE SAME
First Named Inventor/Applicant Name:	David M. Krinsky
Customer Number:	62574
Filer:	Jason Vick/Christine Jacquet
Filer Authorized By:	Jason Vick
Attorney Docket Number:	5550-2-CON-2-1
Receipt Date:	03-JUN-2009
Filing Date:	
Time Stamp:	18:01:37
Application Type:	Utility under 35 USC 111(a)

Payment information:

Submitted with Payment	yes
Payment Type	Deposit Account
Payment was successfully received in RAM	$1090
RAM confirmation Number	4488
Deposit Account	191970
Authorized User	
The Director of the USPTO is hereby authorized to charge indicated fees and credit any overpayment as follows: Charge any Additional Fees required under 37 C.F.R. Section 1.17 (Patent application and reexamination processing fees) Charge any Additional Fees required under 37 C.F.R. Section 1.19 (Document supply fees)	

Charge any Additional Fees required under 37 C.F.R. Section 1.20 (Post Issuance fees)

Charge any Additional Fees required under 37 C.F.R. Section 1.21 (Miscellaneous fees and charges)

File Listing:

Document Number	Document Description	File Name	File Size(Bytes)/ Message Digest	Multi Part /.zip	Pages (if appl.)
1	Application Data Sheet	ADS.pdf	1125425 a53d9533b3a04037cdd031e3f88bf501fda05051	no	5
Warnings:					
Information:					
2		PAT_APP_FINAL.pdf	1877332 19b3dc6dc01035028bf8061a1d8c1acf7b8aad90	yes	18

	Multipart Description/PDF files in .zip description		
	Document Description	**Start**	**End**
	Specification	1	11
	Claims	12	17
	Abstract	18	18

Warnings:					
Information:					
3	Drawings-only black and white line drawings	DRAWINGS.pdf	136266 5304e463a376ceba4a5a3b0588421153d02d6bca	no	2
Warnings:					
Information:					
4	Oath or Declaration filed	COPY_OF_DEC_FROM_PARENT.pdf	168354 8f26e2380f3a59a0429ec2424004da1e09ddb39e	no	2
Warnings:					
Information:					
5		PRELIM_AMEND.pdf	180408 c1bd07d4d3552bef14e6fe89481a9ce2515fea5d	yes	3

	Multipart Description/PDF files in .zip description		
	Document Description	**Start**	**End**
	Preliminary Amendment	1	1
	Claims	2	2

	Applicant Arguments/Remarks Made in an Amendment		3	3	
Warnings:					
Information:					
6	Fee Worksheet (PTO-875)	fee-info.pdf	33130 715a2f9625e8e349cf8af414780473acc5e49bf2	no	2
Warnings:					
Information:					
		Total Files Size (in bytes):	3520915		

This Acknowledgement Receipt evidences receipt on the noted date by the USPTO of the indicated documents, characterized by the applicant, and including page counts, where applicable. It serves as evidence of receipt similar to a Post Card, as described in MPEP 503.

New Applications Under 35 U.S.C. 111
If a new application is being filed and the application includes the necessary components for a filing date (see 37 CFR 1.53(b)-(d) and MPEP 506), a Filing Receipt (37 CFR 1.54) will be issued in due course and the date shown on this Acknowledgement Receipt will establish the filing date of the application.

National Stage of an International Application under 35 U.S.C. 371
If a timely submission to enter the national stage of an international application is compliant with the conditions of 35 U.S.C. 371 and other applicable requirements a Form PCT/DO/EO/903 indicating acceptance of the application as a national stage submission under 35 U.S.C. 371 will be issued in addition to the Filing Receipt, in due course.

New International Application Filed with the USPTO as a Receiving Office
If a new international application is being filed and the international application includes the necessary components for an international filing date (see PCT Article 11 and MPEP 1810), a Notification of the International Application Number and of the International Filing Date (Form PCT/RO/105) will be issued in due course, subject to prescriptions concerning national security, and the date shown on this Acknowledgement Receipt will establish the international filing date of the application.

PTO/SB/14 (07-07)
Approved for use through 06/30/2010. OMB 0651-0032
U.S. Patent and Trademark Office; U.S. DEPARTMENT OF COMMERCE
Under the Paperwork Reduction Act of 1995, no persons are required to respond to a collection of information unless it contains a valid OMB control number.

Application Data Sheet 37 CFR 1.76	Attorney Docket Number	5550-2-CON-2-1
	Application Number	
Title of Invention	SYSTEM AND METHOD FOR ESTABLISHING A DIAGNOSTIC TRANSMISSION MODE AND COMMUNICATING OVER THE SAME	

The application data sheet is part of the provisional or nonprovisional application for which it is being submitted. The following form contains the bibliographic data arranged in a format specified by the United States Patent and Trademark Office as outlined in 37 CFR 1.76.
This document may be completed electronically and submitted to the Office in electronic format using the Electronic Filing System (EFS) or the document may be printed and included in a paper filed application.

Secrecy Order 37 CFR 5.2

☐ Portions or all of the application associated with this Application Data Sheet may fall under a Secrecy Order pursuant to 37 CFR 5.2 (Paper filers only. Applications that fall under Secrecy Order may not be filed electronically.)

Applicant Information:

Applicant 1 Remove

Applicant Authority	◉ Inventor	○ Legal Representative under 35 U.S.C. 117	○ Party of Interest under 35 U.S.C. 118

Prefix	Given Name	Middle Name	Family Name	Suffix
	David	M.	Krinsky	

Residence Information (Select One) ◉ US Residency ○ Non US Residency ○ Active US Military Service

City	Acton	State/Province	MA	Country of Residence i	US

Citizenship under 37 CFR 1.41(b) i	US

Mailing Address of Applicant:

Address 1	4 Ayer Road
Address 2	

City	Acton	State/Province	MA
Postal Code	01720	Country i	US

Applicant 2 Remove

Applicant Authority	◉ Inventor	○ Legal Representative under 35 U.S.C. 117	○ Party of Interest under 35 U.S.C. 118

Prefix	Given Name	Middle Name	Family Name	Suffix
	Robert	Edmund	Pizzano	Jr.

Residence Information (Select One) ◉ US Residency ○ Non US Residency ○ Active US Military Service

City	Stoneham	State/Province	MA	Country of Residence i	US

Citizenship under 37 CFR 1.41(b) i	US

Mailing Address of Applicant:

Address 1	5 Bow Street Court
Address 2	

City	Stoneham	State/Province	MA
Postal Code	02180	Country i	US

All Inventors Must Be Listed - Additional Inventor Information blocks may be generated within this form by selecting the **Add** button. Add

Correspondence Information:

Enter either Customer Number or complete the Correspondence Information section below.
For further information see 37 CFR 1.33(a).

☐ **An Address is being provided for the correspondence Information of this application.**

PTO/SB/14 (07-07)
Approved for use through 06/30/2010. OMB 0651-0032
U.S. Patent and Trademark Office; U.S. DEPARTMENT OF COMMERCE
Under the Paperwork Reduction Act of 1995, no persons are required to respond to a collection of information unless it contains a valid OMB control number.

Application Data Sheet 37 CFR 1.76	Attorney Docket Number	5550-2-CON-2-1
	Application Number	
Title of Invention	SYSTEM AND METHOD FOR ESTABLISHING A DIAGNOSTIC TRANSMISSION MODE AND COMMUNICATING OVER THE SAME	

Customer Number	62574		
Email Address	srlaw@sheridanross.com	Add Email	Remove Email

Application Information:

Title of the Invention	SYSTEM AND METHOD FOR ESTABLISHING A DIAGNOSTIC TRANSMISSION MODE AND COMMUNICATING OVER THE SAME		
Attorney Docket Number	5550-2-CON-2-1	**Small Entity Status Claimed**	☐
Application Type	Nonprovisional		
Subject Matter	Utility		
Suggested Class (if any)		**Sub Class (if any)**	
Suggested Technology Center (if any)			
Total Number of Drawing Sheets (if any)	2	**Suggested Figure for Publication (if any)**	

Publication Information:

☐	Request Early Publication (Fee required at time of Request 37 CFR 1.219)
☐	**Request Not to Publish.** I hereby request that the attached application not be published under 35 U.S. C. 122(b) and certify that the invention disclosed in the attached application **has not and will not** be the subject of an application filed in another country, or under a multilateral international agreement, that requires publication at eighteen months after filing.

Representative Information:

Representative information should be provided for all practitioners having a power of attorney in the application. Providing this information in the Application Data Sheet does not constitute a power of attorney in the application (see 37 CFR 1.32).
Enter either Customer Number or complete the Representative Name section below. If both sections are completed the Customer Number will be used for the Representative Information during processing.

Please Select One:	◉ Customer Number	○ US Patent Practitioner	○ Limited Recognition (37 CFR 11.9)
Customer Number	62574		

Domestic Benefit/National Stage Information:

This section allows for the applicant to either claim benefit under 35 U.S.C. 119(e), 120, 121, or 365(c) or indicate National Stage entry from a PCT application. Providing this information in the application data sheet constitutes the specific reference required by 35 U.S.C. 119(e) or 120, and 37 CFR 1.78(a)(2) or CFR 1.78(a)(4), and need not otherwise be made part of the specification.

Prior Application Status	Pending		Remove
Application Number	Continuity Type	Prior Application Number	Filing Date (YYYY-MM-DD)
	Continuation of	10619691	2009-06-02
Prior Application Status	Patented		Remove

Application Data Sheet 37 CFR 1.76	Attorney Docket Number	5550-2-CON-2-1
	Application Number	
Title of Invention	SYSTEM AND METHOD FOR ESTABLISHING A DIAGNOSTIC TRANSMISSION MODE AND COMMUNICATING OVER THE SAME	

Application Number	Continuity Type	Prior Application Number	Filing Date (YYYY-MM-DD)	Patent Number	Issue Date (YYYY-MM-DD)
10619691	Division of	09755173	2001-01-08	6658052	2003-12-02

Prior Application Status	Expired		Remove
Application Number	Continuity Type	Prior Application Number	Filing Date (YYYY-MM-DD)
09755173	non provisional of	60224308	2000-08-10
Prior Application Status	Expired		Remove
Application Number	Continuity Type	Prior Application Number	Filing Date (YYYY-MM-DD)
09755173	non provisional of	60174865	2000-07-07

Additional Domestic Benefit/National Stage Data may be generated within this form by selecting the **Add** button. Add

Foreign Priority Information:

This section allows for the applicant to claim benefit of foreign priority and to identify any prior foreign application for which priority is not claimed. Providing this information in the application data sheet constitutes the claim for priority as required by 35 U.S.C. 119(b) and 37 CFR 1.55(a).

Remove

Application Number	Country [i]	Parent Filing Date (YYYY-MM-DD)	Priority Claimed
			(•) Yes ( ) No

Additional Foreign Priority Data may be generated within this form by selecting the **Add** button. Add

Assignee Information:

Providing this information in the application data sheet does not substitute for compliance with any requirement of part 3 of Title 37 of the CFR to have an assignment recorded in the Office.

Assignee 1 Remove

If the Assignee is an Organization check here.	[X]		
Organization Name	Aware, Inc.		
Mailing Address Information:			
Address 1	40 Middlesex Turnpike		
Address 2			
City	Bedford	**State/Province**	MA
Country [i]	US	Postal Code	01730-1432
Phone Number		Fax Number	
Email Address			

Additional Assignee Data may be generated within this form by selecting the **Add** button. Add

Signature:

A signature of the applicant or representative is required in accordance with 37 CFR 1.33 and 10.18. Please see 37 CFR 1.4(d) for the form of the signature.

Application Data Sheet 37 CFR 1.76	Attorney Docket Number	5550-2-CON-2-1
	Application Number	
Title of Invention	SYSTEM AND METHOD FOR ESTABLISHING A DIAGNOSTIC TRANSMISSION MODE AND COMMUNICATING OVER THE SAME	

Signature	/Jason H. Vick/			Date (YYYY-MM-DD)	2009-06-03
First Name	Jason H.	Last Name	Vick	Registration Number	45285

This collection of information is required by 37 CFR 1.76. The information is required to obtain or retain a benefit by the public which is to file (and by the USPTO to process) an application. Confidentiality is governed by 35 U.S.C. 122 and 37 CFR 1.14. This collection is estimated to take 23 minutes to complete, including gathering, preparing, and submitting the completed application data sheet form to the USPTO. Time will vary depending upon the individual case. Any comments on the amount of time you require to complete this form and/or suggestions for reducing this burden, should be sent to the Chief Information Officer, U.S. Patent and Trademark Office, U.S. Department of Commerce, P.O. Box 1450, Alexandria, VA 22313-1450. DO NOT SEND FEES OR COMPLETED FORMS TO THIS ADDRESS. **SEND TO: Commissioner for Patents, P.O. Box 1450, Alexandria, VA 22313-1450.**

Privacy Act Statement

The Privacy Act of 1974 (P.L. 93-579) requires that you be given certain information in connection with your submission of the attached form related to a patent application or patent. Accordingly, pursuant to the requirements of the Act, please be advised that: (1) the general authority for the collection of this information is 35 U.S.C. 2(b)(2); (2) furnishing of the information solicited is voluntary; and (3) the principal purpose for which the information is used by the U.S. Patent and Trademark Office is to process and/or examine your submission related to a patent application or patent. If you do not furnish the requested information, the U.S. Patent and Trademark Office may not be able to process and/or examine your submission, which may result in termination of proceedings or abandonment of the application or expiration of the patent.

The information provided by you in this form will be subject to the following routine uses:

1. The information on this form will be treated confidentially to the extent allowed under the Freedom of Information Act (5 U.S.C. 552) and the Privacy Act (5 U.S.C. 552a). Records from this system of records may be disclosed to the Department of Justice to determine whether the Freedom of Information Act requires disclosure of these records.

2. A record from this system of records may be disclosed, as a routine use, in the course of presenting evidence to a court, magistrate, or administrative tribunal, including disclosures to opposing counsel in the course of settlement negotiations.

3. A record in this system of records may be disclosed, as a routine use, to a Member of Congress submitting a request involving an individual, to whom the record pertains, when the individual has requested assistance from the Member with respect to the subject matter of the record.

4. A record in this system of records may be disclosed, as a routine use, to a contractor of the Agency having need for the information in order to perform a contract. Recipients of information shall be required to comply with the requirements of the Privacy Act of 1974, as amended, pursuant to 5 U.S.C. 552a(m).

5. A record related to an International Application filed under the Patent Cooperation Treaty in this system of records may be disclosed, as a routine use, to the International Bureau of the World Intellectual Property Organization, pursuant to the Patent Cooperation Treaty.

6. A record in this system of records may be disclosed, as a routine use, to another federal agency for purposes of National Security review (35 U.S.C. 181) and for review pursuant to the Atomic Energy Act (42 U.S.C. 218(c)).

7. A record from this system of records may be disclosed, as a routine use, to the Administrator, General Services, or his/her designee, during an inspection of records conducted by GSA as part of that agency's responsibility to recommend improvements in records management practices and programs, under authority of 44 U.S.C. 2904 and 2906. Such disclosure shall be made in accordance with the GSA regulations governing inspection of records for this purpose, and any other relevant (i.e., GSA or Commerce) directive. Such disclosure shall not be used to make determinations about individuals.

8. A record from this system of records may be disclosed, as a routine use, to the public after either publication of the application pursuant to 35 U.S.C. 122(b) or issuance of a patent pursuant to 35 U.S.C. 151. Further, a record may be disclosed, subject to the limitations of 37 CFR 1.14, as a routine use, to the public if the record was filed in an application which became abandoned or in which the proceedings were terminated and which application is referenced by either a published application, an application open to public inspections or an issued patent.

9. A record from this system of records may be disclosed, as a routine use, to a Federal, State, or local law enforcement agency, if the USPTO becomes aware of a violation or potential violation of law or regulation.

SYSTEMS AND METHODS FOR ESTABLISHING A DIAGNOSTIC TRANSMISSION MODE AND COMMUNICATING OVER THE SAME

Field of the Invention

This invention relates to test and diagnostic information. In particular, this invention relates to a robust system and method for communicating diagnostic information.

Background of the Invention

The exchange of diagnostic and test information between transceivers in a telecommunications environment is an important part of a telecommunications, such as an ADSL, deployment. In cases where the transceiver connection is not performing as expected, for example, where the data rate is low, where there are many bit errors, or the like, it is necessary to collect diagnostic and test information from the remote transceiver. This is performed by dispatching a technician to the remote site, e.g., a truck roll, which is time consuming and expensive.

In DSL technology, communications over a local subscriber loop between a central office and a subscriber premises is accomplished by modulating the data to be transmitted onto a multiplicity of discrete frequency carriers which are summed together and then transmitted over the subscriber loop. Individually, the carriers form discrete, non-overlapping communication subchannels of limited bandwidth. Collectively, the carriers form what is effectively a broadband communications channel. At the receiver end, the carriers are demodulated and the data recovered.

DSL systems experience disturbances from other data services on adjacent phone lines, such as, for example, ADSL, HDSL, ISDN, T1, or the like. These disturbances may commence after the subject ADSL service is already initiated and, since DSL for internet access is envisioned as an always-on service, the effect of these disturbances must be ameliorated by the subject ADSL transceiver.

SUMMARY OF THE INVENTION

The systems and methods of this invention are directed toward reliably exchanging diagnostic and test information between transceivers over a digital subscriber line in the presence of voice communications and/or other disturbances. For simplicity of reference, the

systems and methods of the invention will hereafter refer to the transceivers generically as modems. One such modem is typically located at a customer premises such as a home or business and is "downstream" from a central office with which it communicates. The other modem is typically located at the central office and is "upstream" from the customer premises. Consistent with industry practice, the modems are often referred to as "ATU-R" ("ADSL transceiver unit, remote," i.e., located at the customer premises) and "ATU-C" ("ADSL transceiver unit, central office" i.e., located at the central office). Each modem includes a transmitter section for transmitting data and a receiver section for receiving data, and is of the discrete multitone type, i.e., the modem transmits data over a multiplicity of subchannels of limited bandwidth. Typically, the upstream or ATU-C modem transmits data to the downstream or ATU-R modem over a first set of subchannels, which are usually the higher-frequency subchannels, and receives data from the downstream or ATU-R modem over a second, usually smaller, set of subchannels, commonly the lower-frequency subchannels. By establishing a diagnostic link mode between the two modems, the systems and methods of this invention are able to exchange diagnostic and test information in a simple and robust manner.

In the diagnostic link mode, the diagnostic and test information is communicated using a signaling mechanism that has a very high immunity to noise and/or other disturbances and can therefore operate effectively even in the case where the modems could not actually establish an acceptable connection in their normal operational mode.

For example, if the ATU-C and/or ATU-R modem fail to complete an initialization sequence, and are thus unable to enter a normal steady state communications mode, where the diagnostic and test information would normally be exchanged, the modems according to the systems and methods of this invention enter a robust diagnostic link mode. Alternatively, the diagnostic link mode can be entered automatically or manually, for example, at the direction of a user. In the robust diagnostic link mode, the modems exchange the diagnostic and test information that is, for example, used by a technician to determine the cause of a failure without the technician having to physically visit, i.e., a truckroll to, the remote site to collect data.

The diagnostic and test information can include, for example, but is not limited to, signal to noise ratio information, equalizer information, programmable gain setting information, bit allocation information, transmitted and received power information, margin information, status and rate information, telephone line condition information, such as the length of the line, the number and location of bridged taps, a wire gauge, or the like, or any

other known or later developed diagnostic or test information that may be appropriate for the particular communications environment. For example, the exchanged diagnostic and test information can be directed toward specific limitations of the modems, to information relating to the modem installation and deployment environment, or to other diagnostic and test information that can, for example, be determined as needed which may aid in evaluating the cause of a specific failure or problem. Alternatively, the diagnostic and test information can include the loop length and bridged tap length estimations as discussed in copending Attorney Docket No. 081513-000003, filed herewith and incorporated herein by reference in its entirety.

For example, an exemplary embodiment of the invention illustrates the use of the diagnostic link mode in the communication of diagnostic information from the remote terminal (RT) transceiver, e.g., ATU-R, to the central office (CO) transceiver, e.g., ATU-C. Transmission of information from the remote terminal to the central office is important since a typical ADSL service provider is located in the central office and would therefore benefit from the ability to determine problems at the remote terminal without a truckroll. However, it is to be appreciated, that the systems and the methods of this invention will work equally well in communications from the central office to the remote terminal.

These and other features and advantages of this invention are described in or are apparent from the following detailed description of the embodiments.

BRIEF DESCRIPTION OF THE DRAWINGS

The embodiments of the invention will be described in detail, with reference to the following figures wherein:

Fig. 1 is a functional block diagram illustrating an exemplary communications system according to this invention; and

Fig. 2 is a flowchart outlining an exemplary method for communicating diagnostic and test information according to this invention.

DETAILED DESCRIPTION OF THE INVENTION

For ease of illustration the following description will be described in relation to the CO receiving diagnostic and test information from the RT. In the exemplary embodiment, the systems and methods of this invention complete a portion of the normal modem initialization before entering into the diagnostic link mode. The systems and methods of this invention can enter the diagnostic link mode manually, for example, at the direction of a

technician or a user after completing a portion of initialization. Alternatively, the systems and methods of this invention can enter the diagnostic link mode automatically based on, for example, a bit rate failure, a forward error correction or a CRC error during showtime, e.g., the normal steady state transmission mode, or the like. The transition into the diagnostic link mode is accomplished by transmitting a message from the CO modem to the RT modem indicating that the modems are to enter into the diagnostic link mode, as opposed to transitioning into the normal steady state data transmission mode. Alternatively, the transition into the diagnostic link mode is accomplished by transmitting a message from the RT modem to the CO modem indicating that the modems are to enter into the diagnostic link mode as opposed to transitioning into the normal steady state data transmission mode. For example, the transition signal uses an ADSL state transition to transition from a standard ADSL state to a diagnostic link mode state.

In the diagnostic link mode, the RT modem sends diagnostic and test information in the form of a collection of information bits to the CO modem that are, for example, modulated by using one bit per DTM symbol modulation, as is used in the C-Rates1 message in the ITU and ANSI ADSL standards, where the symbol may or may not include a cyclic prefix. Other exemplary modulation techniques include Differential Phase Shift Keying (DPSK) on a subset or all the carriers, as specified in, for example, ITU standard G.994.1, higher order QAM modulation (>1 bit per carrier), or the like.

In the one bit per DMT symbol modulation message encoding scheme, a bit with value 0 is mapped to the REVERB1 signal and a bit with a value of 1 mapped to a SEGUE1 signal. The REVERB1 and SEGUE1 signals are defined in the ITU and ANSI ADSL standards. The REVERB1 signal is generated by modulating all of the carriers in the multicarrier system with a known pseudo-random sequence thus generating a wideband modulated signal. The SEGUE1 signal is generated from a carrier by 180 degree phase reversal of the REVERB1 signal. Since both signals are wideband and known in advance, the receiver can easily detect the REVERB1 and SEGUE1 signal using a simple matched filter in the presence of large amounts of noise and other disturbances.

Exemplary Message Variables
Data Sent in the Diag Link
Train Type
ADSL Standard
Chip Type
Vendor ID
Code Version
Average Reverb Received Signal
Programmable gain amplifier (PGA) Gain – Training
Programmable gain amplifier PGA Gain – Showtime
Filter Present during Idle Channel Calculation
Average Idle Channel Noise
Signal to Noise during Training
Signal to Noise during Showtime
Bits and Gains
Data Rate
Framing Mode
Margin
Reed-Solomon Coding Gain
QAM Usage
Frequency Domain Equalizer (FDQ) Coefficients
Gain Scale
Time domain equalizer (TDQ) Coefficients
Digital Echo Canceller (DEC) Coefficients

Table 1

Table 1 shows an example of a data message that can be sent by the RT to the CO during the diagnostic link mode. In this example, the RT modem sends 23 different data variables to the CO. Each data variable contains different items of diagnostic and test information that are used to analyze the condition of the link. The variables may contain more than one item of data. For example, the *Average Reverb Signal* contains the power levels per tone, up to, for example, 256 entries, detected during the ADSL Reverb signal. Conversely, the *PGA Gain – Training* is a single entry, denoting the gain in dB at the receiver during the ADSL training.

Many variables that represent the type of diagnostic and test information that are used to analyze the condition of the link are sent from the RT modem to the CO modem. These variables can be, for example, arrays with different lengths depending on, for example, information in the initiate diagnostic mode message. The systems and methods of this invention can be tailored to contain many different diagnostic and test information variables.

Thus, the system is fully configurable, allowing subsets of data to be sent and additional data variables to be added in the future. Therefore, the message length can be increased or decreased, and diagnostic and test information customized, to support more or less variables as, for example, hardware, the environment and/or the telecommunications equipment dictates.

Therefore, it is to be appreciated, that in general the variables transmitted from the modem being tested to the receiving modem can be any combination of variables which allow for transmission of test and/or diagnostic information.

Fig. 1 illustrates an exemplary embodiment of the additional modem components associated with the diagnostic link mode. In particular, the diagnostic link system 100 comprises a central office modem 200 and a remote terminal modem 300. The central office modem 200 comprises, in addition to the standard ATU-C components, a CRC checker 210, a diagnostic device 220, and a diagnostic information monitoring device 230. The remote terminal modem 300 comprises, in addition to the standard components associated with an ATU-R, a message determination device 310, a power control device 320, a diagnostic device 330 and a diagnostic information storage device 340. The central office modem 200 and the remote terminal model 300 are also connected, via link 5, to a splitter 10 for a phone switch 20, and a splitter 30 for a phone 40. Alternatively, the ATU-R can operate without a splitter, e.g., splitterless, as specified in ITU standard G.992.2 (G.lite) or with an in-line filter in series with the phone 40. In addition, the remote terminal modem 300, can also be connected to, for example, one or more user terminals 60. Additionally, the central office modem 200 can be connected to one or more distributed networks 50, via link 5, which may or may not also be connected to one or more other distributed networks.

While the exemplary embodiment illustrated in Fig. 1 shows the diagnostic link system 100 for an embodiment in which the remote terminal modem 300 is communicating test and diagnostic information to the central office 200, it is to be appreciated that the various components of the diagnostic link system can be rearranged such that the diagnostic and test information can be forwarded from the central office 200 to the remote terminal modem 300, or, alternatively, such that both modems can send and receive diagnostic and/or test information. Furthermore, it is to be appreciated, that the components of the diagnostic link system 100 can be located at various locations within a distributed network, such as the POTS network, or other comparable telecommunications network. Thus, it should be appreciated that the components of the diagnostic link system 100 can be combined into one device for respectively transmitting, receiving, or transmitting and receiving diagnostic

and/or test information. As will be appreciated from the following description, and for reasons of computational efficiency, the components of the diagnostic link system 100 can be arranged at any location within a telecommunications network and/or modem without affecting the operation of the system.

The links 5 can be a wired or wireless link or any other known or later developed element(s) that is capable of supplying and communicating electronic data to and from the connected elements. Additionally, the user terminal 60 can be, for example, a personal computer or other device allowing a user to interface with and communicate over a modem, such as a DSL modem. Furthermore, the systems and method of this invention will work equally well with splitterless and low-pass mulitcarrier modem technologies.

In operation, the remote terminal 300, commences its normal initialization sequence. The diagnostic device 330 monitors the initialization sequence for a failure. If there is a failure, the diagnostic device 330 initiates the diagnostic link mode. Alternatively, a user or, for example, a technician at the CO, can specify that the remote terminal 300 enter into the diagnostic link mode after completing a portion of an initialization. Alternatively still, the diagnostic device 330 can monitor the normal steady state data transmission of the remote terminal, and upon, for example, an error threshold being exceeded, the diagnostic device 330 will initiate the diagnostic link mode.

Upon initialization of the diagnostic link mode, the diagnostic device 330, in cooperation with the remote terminal 300 will transmit an initiate diagnostic link mode message from the remote terminal to the central office 200 (RT to CO). Alternatively, the central office modem 200 can transmit an initiate diagnostic link mode message to the remote terminal modem 300. If the initiate diagnostic link mode message is received by the central office 200, the diagnostic device 330, in cooperation with the message determination device 310, determines a diagnostic link message to be forwarded to the central office 200. For example, the diagnostic link message can include test information that has been assembled during, for example, the normal ADSL initialization procedure. The diagnostic and/or test information can include, but is not limited to, the version number of the diagnostic link mode, the length of the diagnostic and/or test information, the communications standard, such as the ADSL standard, the chipset type, the vendor identifications, the ATU version number, the time domain received reverb signal, the frequency domain reverb signal, the amplifier settings, the CO transmitter power spectral density, the frequency domain received idle channel, the signal to noise ratio, the bits and gains and the upstream and downstream transmission rates, or the like.

If the initiate diagnostic link mode message is not received by the central office 200, the initiate diagnostic link mode message can, for example, be re-transmitted a predetermined number of iterations until a determination is made that it is not possible to establish a connection.

Assuming the initiate diagnostic link mode message is received, then, for a predetermined number of iterations, the diagnostic device 330, in cooperation with the remote terminal modem 300 and the diagnostic information storage device 340, transmits the diagnostic link message with a cyclic redundancy check (CRC) to the central office modem 200. However, it is to be appreciated that in general, any error detection scheme, such as bit error detection, can be used without affecting the operation of the system. The central office 200, in cooperation with the CRC checker 210, determines if the CRC is correct. If the CRC is correct, the diagnostic information stored in the diagnostic information storage device 340 has been, with the cooperation of the diagnostic device 330, and the remote terminal modem 300, forwarded to the central office 200 successfully.

If, for example, the CRC checker 210 is unable to determine the correct CRC, the diagnostic device 330, in cooperation with power control device 320, increases the transmission power of the remote terminal 300 and repeats the transmission of the diagnostic link message from the remote terminal 300 to the central office 200. This process continues until the correct CRC is determined by the CRC checker 210.

The maximum power level used for transmission of the diagnostic link message can be specified by, for example, the user or the ADSL service operator. If the CRC checker 210 does not determine a correct CRC at the maximum power level and the diagnostic link mode can not be initiated then other methods for determining diagnostic information are utilized, such as dispatching a technician to the remote site, or the like.

Alternatively, the remote terminal 300, with or without an increase in the power level, can transmit the diagnostic link message several times, for example, 4 times. By transmitting the diagnostic link message several times, the CO modem 200 can use, for example, a diversity combining scheme to improve the probability of obtaining a correct CRC from the received diagnostic link message(s).

Alternatively, as previously discussed, the central office 200 comprises a diagnostic information monitoring device 230. The remote terminal 300 can also include a diagnostic information monitoring device. One or more of these diagnostic information monitoring devices can monitor the normal steady state data transmission between the remote terminal 300 and the central office 200. Upon, for example, the normal steady state data transmission

exceeded a predetermined error threshold, the diagnostic information monitoring device can initiate the diagnostic link mode with the cooperation of the diagnostic device 300 and/or the diagnostic device 220.

Fig. 2 illustrates an exemplary method for entering a diagnostic link mode in accordance with this invention. In particular, control begins in step S100 and continues to step S110. In step S110, the initialization sequence is commenced. Next, in step S120, if an initialization failure is detected, control continues to step S170. Otherwise, control jumps to step S130. In step S130, a determination is made whether the diagnostic link mode has been selected. If the diagnostic link mode has been selected, control continues to step S170, otherwise, control jumps to step S140.

In step S170, the initiate diagnostic link mode message is transmitted from, for example, the remote terminal to the central office. Next, in step S180, a determination is made whether the initiate diagnostic mode message has been received by the CO. If the initiate diagnostic mode message has been received by the CO, control jumps to step S200. Otherwise, control continues to step S190. In step S190, a determination is made whether to re-transmit the initiate diagnostic mode message, for example, based on whether a predetermined number of iterations have already been completed. If the initiate diagnostic mode message is to be re-transmitted, control continues back to step S170. Otherwise, control jumps to step S160.

In step S200, the diagnostic link message is determined, for example, by assembling test and diagnostic information about one or more of the local loop, the modem itself, the telephone network at the remote terminal, or the like. Next, in step S210, for a predetermined number of iterations, steps S220-S240 are completed. In particular, in step S220 a diagnostic link message comprising a CRC is transmitted to, for example, the CO. Next, in step S230, the CRC is determined. Then, in step S240, a determination is made whether the CRC is correct. If the CRC is correct, the test and/or diagnostic information has been successfully communicated and control continues to step S160.

Otherwise, if step S210 has completed the predetermined number of iterations, control continues to step S250. In step S250, the transmission power is increased and control continues back to step S210. Alternatively, as previously discussed, the diagnostic link message may be transmitted a predetermined number of times, with our without a change in the transmission power.

In step S140, the normal steady state data transmission is entered into between two modems, such as the remote terminal and the cental office modems. Next, in step S150, a

determination is made whether an error threshold during the normal steady state data transmission has been exceeded. If the error threshold has been exceeded, control continues to step S170. Otherwise, control jumps to step S160. In step S160, the control sequence ends.

As shown in Fig. 1, the diagnostic link mode system can be implemented either on a single program general purpose computer, a modem, such as a DSL modem, or a separate program general purpose computer having a communications device. However, the diagnostic link system can also be implemented on a special purpose computer, a programmed microprocessor or microcontroller and peripheral integrated circuit element, an ASIC or other integrated circuit, a digital signal processor, a hardwired electronic or logic circuit such as a discrete element circuit, a programmed logic device such as a PLD, PLA, FPGA, PAL, or the like, and associated communications equipment. In general, any device capable of implementing a finite state machine that is capable of implementing the flowchart illustrated in Fig. 2 can be used to implement a diagnostic link system according to this invention.

Furthermore, the disclosed method may be readily implemented in software using object or object-oriented software development environments that provide portable source code that can be used on a variety of computer, workstation, or modem hardware platforms. Alternatively, the disclosed diagnostic link system may be implemented partially or fully in hardware using standard logic circuits or a VLSI design. Other software or hardware can be used to implement the systems in accordance with this invention depending on the speed and/or efficiency requirements of the systems, the particular function, and a particular software or hardware systems or microprocessor or microcomputer systems being utilized. The diagnostic link system and methods illustrated herein however, can be readily implemented in hardware and/or software using any known or later developed systems or structures, devices and/or software by those of ordinary skill in the applicable art from the functional description provided herein and with a general basic knowledge of the computer and telecommunications arts.

Moreover, the disclosed methods can be readily implemented as software executed on a programmed general purpose computer, a special purpose computer, a microprocessor, or the like. In these instances, the methods and systems of this invention can be implemented as a program embedded on a modem, such a DSL modem, as a resource residing on a personal computer, as a routine embedded in a dedicated diagnostic link system, a central office, or the like. The diagnostic link system can also be implemented by physically incorporating the

system and method into a software and/or hardware system, such as a hardware and software systems of a modem, a general purpose computer, an ADSL line testing device, or the like.

It is, therefore, apparent that there is provided in accordance with the present invention, systems and methods for transmitting a diagnostic link message. While this invention has been described in conjunction with a number of embodiments, it is evident that many alternatives, modifications and variations would be or are apparent to those of ordinary skill in the applicable arts. Accordingly, applicants intend to embrace all such alternatives, modifications, equivalents and variations that are within the spirit and the scope of this invention.

What is Claimed is:

1. A diagnostic link system for communicating data between modems using multicarrier modulation comprising:

an initiate diagnostic mode trigger that instructs a transmitting modem to forward an initiate diagnostic mode message to a receiving modem;

a message determination device that determines a diagnostic link message; and

a receiving modem diagnostic device that receives the diagnostic link message and determines the accuracy of the diagnostic link message.

2. The system of claim 1, further comprising a power control device that increases a transmission power of the diagnostic link message if the received diagnostic link message is inaccurate.

3. The system of claim 1, wherein the diagnostic link message is re-transmitted a predetermined number of times.

4. The system of claim 1, wherein the diagnostic link message comprises at least one of test and diagnostic information.

5. The system of claim 4, wherein the diagnostic link message comprises at least one of a version number of a diagnostic link mode, a length of the diagnostic information, a communications standard, a chipset type, one or more vendor identifications, an ATU version number, a time domain received reverb signal, a frequency domain reverb signal, an amplifier setting, a CO transmitter power spectral density, a frequency domain received idle channel, a signal to noise ratio, bits and gain information, and upstream and downstream transmission rates.

6. The system of claim 1, wherein the accuracy is determined based on at least one of an error detecting scheme, a bit error detection and a cyclic redundancy check.

7. The system of claim 1, wherein the trigger is based on at least one of an initialization failure, a bit rate failure, a CRC error in an initialization message, a CRC error during a normal steady state transmission mode, a forward error correction error, a user request, a central office modem request and a remote terminal modem request.

8. The system of claim 1, wherein the transmitting modem completes a portion of a modem initialization sequence before forwarding the initiate diagnostic mode message.

9. The system of claim 1, wherein the transmitting modem is at least one of a central office modem and a remote terminal modem.

10. The system of claim 1, wherein the receiving modem is at least one of a central office modem and a remote terminal modem.

11. A method for communicating data between modems using multicarrier modulation comprising:

instructing a transmitting modem to forward an initiate diagnostic mode message to a receiving modem;

determining a diagnostic link message;

transmitting the diagnostic link message; and

determining the accuracy of the transmitted diagnostic link message.

12. The method of claim 11, further comprising increasing a transmission power of the diagnostic link message if a received diagnostic link message is inaccurate.

13. The method of claim 11, further comprising transmitting the diagnostic link message a predetermined number of times.

14. The method of claim 11, wherein the diagnostic link message comprises at least one of test and diagnostic information.

15. The method of claim 14, wherein the diagnostic link message comprises at least one of a version number of a diagnostic link mode, a length of the diagnostic information, a communications standard, a chipset type, one or more vendor identifications, an ATU version number, a time domain received reverb signal, a frequency domain reverb signal, an amplifier setting, a CO transmitter power spectral density, a frequency domain received idle channel, a signal to noise ratio, bits and gain information, and upstream and downstream transmission rates.

16. The method of claim 11, wherein the accuracy is determined based on at least one of an error detecting scheme, a bit error detection and a cyclic redundancy check.

17. The method of claim 11, wherein the initiate diagnostic mode message is based on at least one of an initialization failure, a bit rate failure, a CRC error in an initialization message, a CRC error during the normal steady state transmission mode, a forward error correction error, a user request, a central office modem request and a remote terminal modem request.

18. The method of claim 11, further comprising completing a portion of a modem initialization sequence before forwarding the initiate diagnostic mode message.

19. The method of claim 11, wherein a transmitting modem is at least one of a central office modem and a remote terminal modem.

20. The method of claim 11, wherein a receiving modem is at least one of a central office modem and a remote terminal modem.

21. A method for communicating data between modems using multicarrier modulation comprising:

receiving an initiate diagnostic mode message;

determining a diagnostic link message;

transmitting the diagnostic link message; and

at least one of increasing a transmission power of the diagnostic link message if the received diagnostic link message is inaccurate and re-transmitting the diagnostic link message a predetermined number of times.

22. The method of claim 21, wherein the diagnostic link message comprises at least one of test and diagnostic information.

23. The method of claim 22, wherein the diagnostic link message comprises at least one of a version number of a diagnostic link mode, a length of the diagnostic information, a communications standard, a chipset type, one or more vendor identifications, an ATU version number, a time domain received reverb signal, a frequency domain reverb signal, an amplifier setting, a CO transmitter power spectral density, a frequency domain received idle channel, a signal to noise ratio, bits and gain information, and upstream and downstream transmission rates.

24. The method of claim 21, wherein the accuracy is determined based on at least one of an error detecting scheme, a bit error detection and a cyclic redundancy check.

25. The method of claim 21, wherein the initiate diagnostic mode message is based on at least one of an initialization failure, a bit rate failure, a CRC error in an initialization message, a CRC error during the normal steady state transmission mode, a forward error correction error, a user request, a central office modem request and a remote terminal modem request.

26. The method of claim 21, further comprising completing a portion of a modem initialization sequence before forwarding the initiate diagnostic mode message.

27. The method of claim 21, wherein a transmitting modem is at least one of a central office modem and a remote terminal modem.

28. The method of claim 21, wherein a receiving modem is at least one of a central office modem and a remote terminal modem.

29. A method for communicating data between modems using multicarrier modulation comprising:

receiving an initiate diagnostic mode message;

determining the accuracy of a received diagnostic link message; and

receiving at least one of an increased transmission power diagnostic link message if the received diagnostic link message is inaccurate and a re-transmission of a predetermined number of the diagnostic link messages.

30. The method of claim 29, wherein the diagnostic link message comprises at least one of test and diagnostic information.

31. The method of claim 30, wherein the received diagnostic link message comprises at least one of a version number of a diagnostic link mode, a length of the diagnostic information, a communications standard, a chipset type, one or more vendor identifications, an ATU version number, a time domain received reverb signal, a frequency domain reverb signal, an amplifier setting, a CO transmitter power spectral density, a frequency domain received idle channel, a signal to noise ratio, bits and gain information, and upstream and downstream transmission rates.

32. The method of claim 29, wherein the accuracy is determined based on at least one of an error detecting scheme, a bit error detection and a cyclic redundancy check.

33. The method of claim 29, wherein the initiate diagnostic mode message is based on at least one of an initialization failure, a bit rate failure, a CRC error in an initialization message, a CRC error during the normal steady state transmission mode, a forward error correction error, a user request, a central office modem request and a remote terminal modem request.

34. The method of claim 29, further comprising completing a portion of a modem initialization sequence before receiving the initiate diagnostic mode message.

35. An information storage media comprising information for communicating data between modems using multicarrier modulation comprising:

information that instructs a transmitting modem to forward an initiate diagnostic mode message to a receiving modem;

information that determines a diagnostic link message;

information that transmits the diagnostic link message; and

information that determines the accuracy of the transmitted diagnostic link message.

36. An information storage media comprising information for communicating data between modems using multicarrier modulation comprising:

information that receives an initiate diagnostic mode message;

information that determines a diagnostic link message;

information that transmits the diagnostic link message; and

information that at least one of increases a transmission power of the diagnostic link message if the received diagnostic link message is inaccurate and re-transmits the diagnostic link message a predetermined number of times.

37. An information storage media comprising information for communicating data between modems using multicarrier modulation comprising:

information that receives an initiate diagnostic mode message;

information that determines the accuracy of a received diagnostic link message; and

information that receives at least one of an increased transmission power diagnostic link message if the received diagnostic link message is inaccurate and a re-transmission of a predetermined number of the diagnostic link messages.

38. A method for communicating diagnostic information between DSL modems using multicarrier modulation comprising:

completing a portion of a modem initialization sequence;

transmitting an initiate diagnostic communication mode message to a receiving modem;

entering a diagnostic communications mode based on at least one of an initialization failure, a bit rate failure, a CRC error in an initialization message, a CRC error during the normal steady state transmission mode, a forward error correction error, a user request, a central office modem request and a remote terminal modem request; and

transmitting a diagnostic link message comprising at least one of a version number of a diagnostic link mode, a length of the diagnostic information, a communications standard, a chipset type, one or more vendor identifications, an ATU version number, a time domain received reverb signal, a frequency domain reverb signal, an amplifier setting, a CO transmitter power spectral density, a frequency domain received idle channel, a signal to noise ratio, bits and gain information, and upstream and downstream transmission rates.

39. The method of claim 38, further comprising re-transmitting the diagnostic link message a predetermined number of times.

40. The method of claim 38, further comprising increasing a transmission power of the diagnostic link message.

41. A method for communicating diagnostic information between DSL modems using multicarrier modulation comprising:

completing a portion of a modem initialization sequence;

receiving an initiate diagnostic communication mode message;

entering a diagnostic communications mode based on at least one of an initialization failure, a bit rate failure, a CRC error in an initialization message, a CRC error during the normal steady state transmission mode, a forward error correction error, a user request, a central office modem request and a remote terminal modem request;

receiving a diagnostic link message comprising at least one of a version number of a diagnostic link mode, a length of the diagnostic information, a communications standard, a chipset type, one or more vendor identifications, an ATU version number, a time domain received reverb signal, a frequency domain reverb signal, an amplifier setting, a CO transmitter power spectral density, a frequency domain received idle channel, a signal to noise ratio, bits and gain information, and upstream and downstream transmission rates.

42. The method of claim 41, further comprising receiving a re-transmitted diagnostic link message a predetermined number of times.

43. The method of claim 41, further comprising receiving an increased transmission power diagnostic link message.

ABSTRACT OF THE DISCLOSURE

Upon detection of a trigger, such as the exceeding of an error threshold or the direction of a user, a diagnostic link system enters a diagnostic information transmission mode. This diagnostic information transmission mode allows for two modems to exchange diagnostic and/or test information that may not otherwise be exchangeable during normal communication. The diagnostic information transmission mode is initiated by transmitting an initiate diagnostic link mode message to a receiving modem accompanied by a cyclic redundancy check (CRC). The receiving modem determines, based on the CRC, if a robust communications channel is present. If a robust communications channel is present, the two modems can initiate exchange of the diagnostic and/or test information. Otherwise, the transmission power of the transmitting modem is increased and the initiate diagnostic link mode message re-transmitted to the receiving modem until the CRC is determined to be correct.

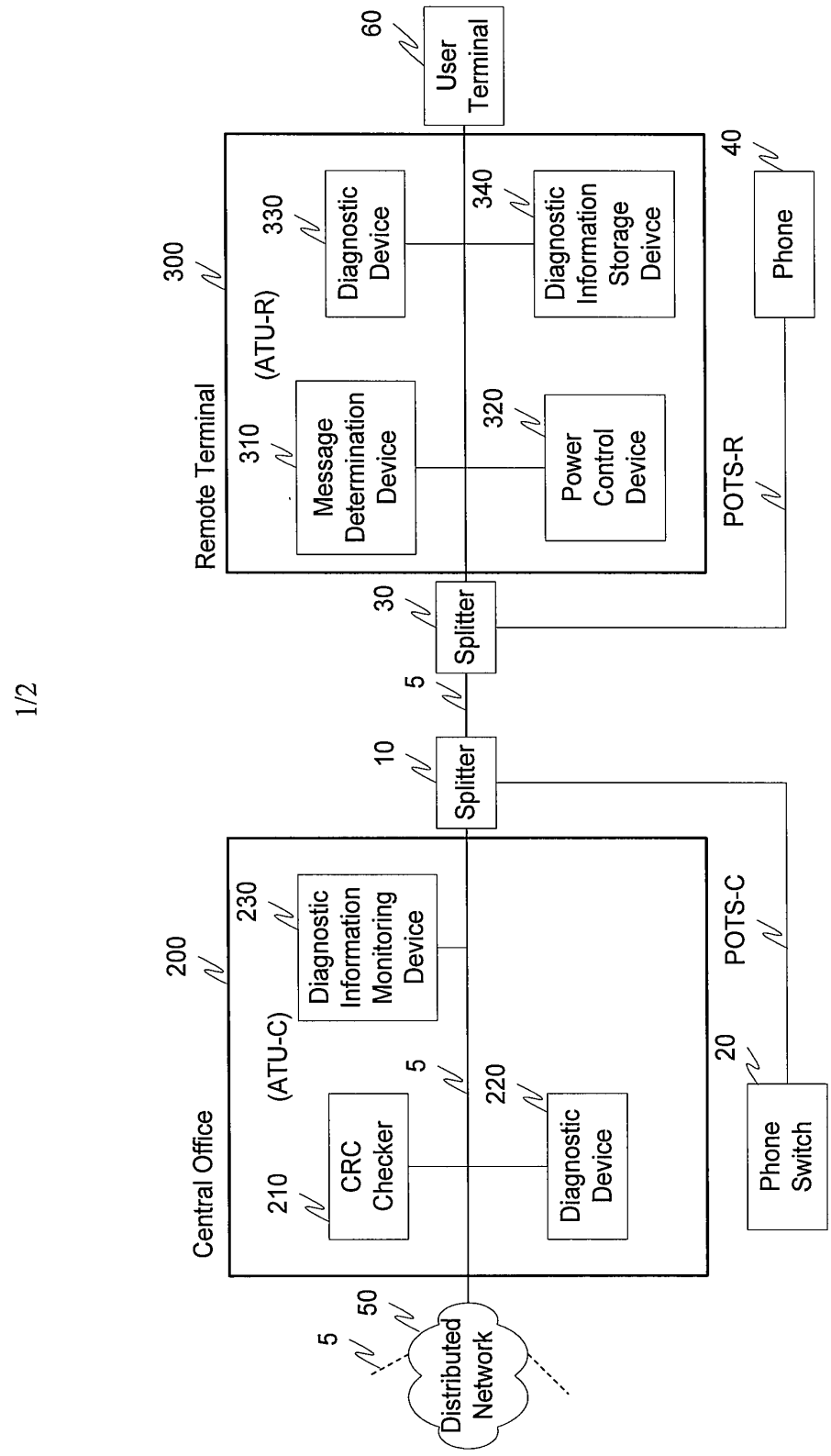
Central Office
200
(ATU-C)
210
CRC Checker
220
Diagnostic Device
230
Diagnostic Information Monitoring Device
POTS-C
20
Phone Switch
Distributed Network
50
5
10
Splitter
5
30
Splitter
Remote Terminal
300
(ATU-R)
310
Message Determination Device
320
Power Control Device
330
Diagnostic Device
340
Diagnostic Information Storage Deivce
POTS-R
40
Phone
60
User Terminal

Fig. 1

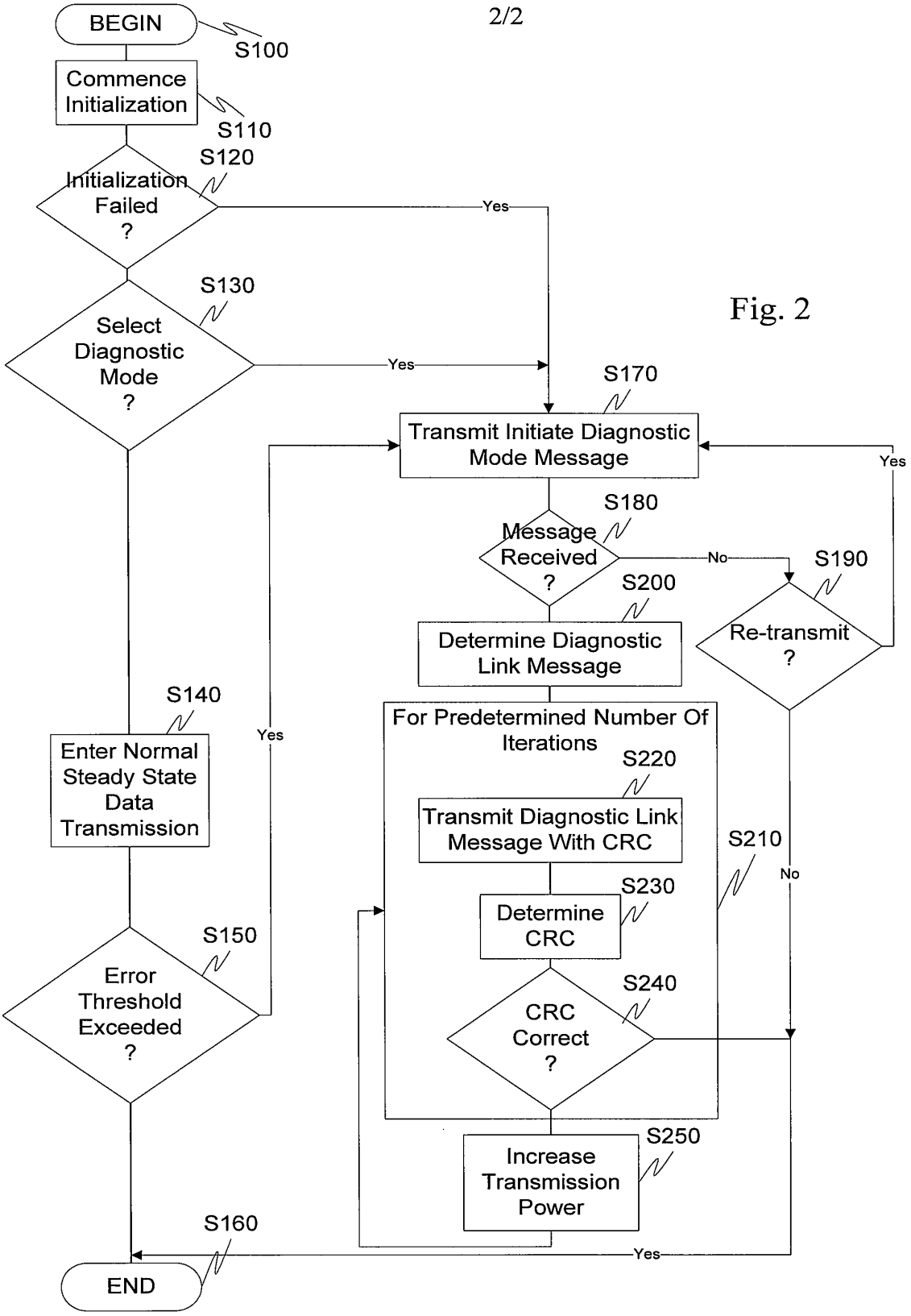
BEGIN
S100
Commence Initialization
S110
S120
Initialization Failed ?
Yes
S130
Select Diagnostic Mode ?
Yes
S170
Transmit Initiate Diagnostic Mode Message
S180
Message Received ?
No
S190
Re-transmit ?
Yes
S200
Determine Diagnostic Link Message
For Predetermined Number Of Iterations
S220
Transmit Diagnostic Link Message With CRC
S230
Determine CRC
S240
CRC Correct ?
S210
No
S250
Increase Transmission Power
S140
Enter Normal Steady State Data Transmission
S150
Error Threshold Exceeded ?
Yes
S160
END
Yes

Fig. 2

PATENT APPLICATION

Attorney Docket No. 081513.00004

DECLARATION AND POWER OF ATTORNEY FOR PATENT APPLICATION

As a below named inventor, I hereby declare that:

My residence, post office address and citizenship are as stated below next to my name,

I believe I am the original, first and sole inventor (if only one name is listed below) or an original, first and joint inventor (if plural names are listed below) of the subject matter which is claimed and for which a patent is sought on the invention entitled: **SYSTEMS AND METHODS FOR ESTABLISHING A DIAGNOSTIC TRANSMISSION MODE AND COMMUNICATING OVER THE SAME**

the specification and claims of which
☒ are attached hereto OR ☐ was filed on _____ as U.S. Application No. _____

I hereby state that I have reviewed and understand the contents of the above-identified specification, including the claims.

I acknowledge the duty to disclose information which is material to the patentability as defined in Title 37, Code of Federal Regulations, §1.56.

I hereby claim priority benefits under Title 35, United States Code, §119 of any foreign or U.S. Provisional application(s) for patent listed below, and have also identified below any foreign application(s) or Provisional application(s) for patent having a filing date before that of the application on which priority is claimed:

Prior Foreign or U.S. Provisional Application(s)

(Number)	(Country)	(Day/Month/Year Filed)
60/224,308	U.S.A.	August 10, 2000
60/174,865	U.S.A.	January 7, 2000

POWER OF ATTORNEY: As a named inventor, I hereby appoint the following registered practitioners to prosecute this application and transact all business in the Patent and Trademark Office connected therewith.

Daniel W. Sixbey	20,932	Daniel S. Song	43,143
Stuart J. Friedman	24,312	Marc S. Kaufman	35,212
Charles M. Leedom, Jr.	26,477	James E. Howard	39,175
David S. Safran	27,997	Corinne R. Gorski	34,339
Thomas W. Cole	28,290	Kenneth H. Salen	43,077
Donald R. Studebaker	32,815	Jason H. Vick	45,285
Jeffrey L. Costellia	35,483	Carolyn Baumgardner	41,345
Tim L. Brackett Jr.	36,092	Luan C. Do	38,434
Eric J. Robinson	38,285		

Direct all correspondence to: [X] Customer Number 22204

ADDRESS ALL CORRESPONDENCE TO:	DIRECT TELEPHONE CALLS TO: (name and telephone number)
Eric J. Robinson, Esq. **NIXON PEABODY LLP** **8180 Greensboro Drive** **Suite 800** **McLean, Virginia 22102**	**Eric J. Robinson** **(703) 790-9110**

I hereby declare that all statements made herein of my own knowledge are true and that all statements made on information and belief are believed to be true; and further that these statements were made with the knowledge that willful false statements and the like so made are punishable by fine or imprisonment, or both, under §1001 of Title 18 of the United States Code and that such willful false statements may jeopardize the validity of the application or any patent issuing thereon.

DECLARATION AND POWER OF ATTORNEY, continued

Name of sole or first inventor: David M. KRINSKY

Inventor's Signature: _____ Date: 1/8/01

Residence: 4 Ayer Road
Acton, MA 01720

Citizenship: U.S.

Post Office Address:
(Same as above)

Name of second inventor: Robert Edmund PIZZANO, Jr.

Inventor's Signature: _____ Date: 1/8/01

Residence: 5 Bow Street Court
Stoneham, MA 02180

Citizenship: U.S.

Post Office Address:
(Same as above)

NVA166186.1

PTO/SB/06 (12-04)

Filing Date: 06/03/09

Approved for use through 7/31/2006. OMB 0651-0032
U.S. Patent and Trademark Office; U.S. DEPARTMENT OF COMMERCE

Under the Paperwork Reduction Act of 1995, no persons are required to respond to a collection of information unless it displays a valid OMB control number.

PATENT APPLICATION FEE DETERMINATION RECORD Substitute for Form PTO-875	Application or Docket Number 12/477,742

A.PE

APPLICATION AS FILED – PART I

FOR	(Column 1) NUMBER FILED	(Column 2) NUMBER EXTRA	SMALL ENTITY RATE ($)	SMALL ENTITY FEE ($)	OR	OTHER THAN SMALL ENTITY RATE ($)	OTHER THAN SMALL ENTITY FEE ($)
BASIC FEE (37 CFR 1.16(a), (b), or (c))	N/A	N/A	N/A			N/A	**330**
SEARCH FEE (37 CFR 1.16(k), (i), or (m))	N/A	N/A	N/A			N/A	**540**
EXAMINATION FEE (37 CFR 1.16(o), (p), or (q))	N/A	N/A	N/A			N/A	**220**
TOTAL CLAIMS (37 CFR 1.16(i))	**3** minus 20 =		x$26		OR	x$52	
INDEPENDENT CLAIMS (37 CFR 1.16(h))	**3** minus 3 =	*	x$110			x$220	
APPLICATION SIZE FEE (37 CFR 1.16(s))	If the specification and drawings exceed 100 sheets of paper, the application size fee due is $260 ($130 for small entity) for each additional 50 sheets or fraction thereof. See 35 U.S.C. 41(a)(1)(G) and 37 CFR						
MULTIPLE DEPENDENT CLAIM PRESENT (37 CFR 1.16(j))			195			390	
			TOTAL			TOTAL	**1090**

* If the difference in column 1 is less than zero, enter "0" in column 2.

APPLICATION AS AMENDED – PART II

		(Column 1) CLAIMS REMAINING AFTER AMENDMENT		(Column 2) HIGHEST NUMBER PREVIOUSLY PAID FOR	(Column 3) PRESENT EXTRA	SMALL ENTITY RATE ($)	SMALL ENTITY ADDITIONAL FEE ($)	OR	OTHER THAN SMALL ENTITY RATE ($)	OTHER THAN SMALL ENTITY ADDITIONAL FEE ($)
AMENDMENT A	Total (37 CFR 1.16(i))	*	Minus	**	=	x =		OR	x =	
	Independent (37 CFR 1.16(h))	*	Minus	***	=	x =		OR	x =	
	Application Size Fee (37 CFR 1.16(s))									
	FIRST PRESENTATION OF MULTIPLE DEPENDENT CLAIM (37 CFR 1.16(j))					N/A		OR	N/A	
	Cancel 1-43					TOTAL ADD'T FEE		OR	TOTAL ADD'T FEE	

		(Column 1) CLAIMS REMAINING AFTER AMENDMENT		(Column 2) HIGHEST NUMBER PREVIOUSLY PAID FOR	(Column 3) PRESENT EXTRA	RATE ($)	ADDITIONAL FEE ($)	OR	RATE ($)	ADDITIONAL FEE ($)
AMENDMENT B	Total (37 CFR 1.16(i))	*	Minus	**	=	x =		OR	x =	
	Independent (37 CFR 1.16(h))	*	Minus	***	=	x =		OR	x =	
	Application Size Fee (37 CFR 1.16(s))									
	FIRST PRESENTATION OF MULTIPLE DEPENDENT CLAIM (37 CFR 1.16(j))					N/A		OR	N/A	
						TOTAL ADD'T FEE		OR	TOTAL ADD'T FEE	

* If the entry in column 1 is less than the entry in column 2, write "0" in column 3.
** If the "Highest Number Previously Paid For" IN THIS SPACE is less than 20, enter "20".
*** If the "Highest Number Previously Paid For" IN THIS SPACE is less than 3, enter "3".
The "Highest Number Previously Paid For" (Total or Independent) is the highest number found in the appropriate box in column 1.

This collection of information is required by 37 CFR 1.16. The information is required to obtain or retain a benefit by the public which is to file (and by the USPTO to process) an application. Confidentiality is governed by 35 U.S.C. 122 and 37 CFR 1.14. This collection is estimated to take 12 minutes to complete, including gathering, preparing, and submitting the completed application form to the USPTO. Time will vary depending upon the individual case. Any comments on the amount of time you require to complete this form and/or suggestions for reducing this burden, should be sent to the Chief Information Officer, U.S. Patent and Trademark Office, U.S. Department of Commerce, P.O. Box 1450, Alexandria, VA 22313-1450. DO NOT SEND FEES OR COMPLETED FORMS TO THIS ADDRESS. **SEND TO: Commissioner for Patents, P.O. Box 1450, Alexandria, VA 22313-1450.**

If you need assistance in completing the form, call 1-800-PTO-9199 and select option 2.

PTO/SB/06 (07-06)
Approved for use through 1/31/2007. OMB 0651-0032
U.S. Patent and Trademark Office; U.S. DEPARTMENT OF COMMERCE
Under the Paperwork Reduction Act of 1995, no persons are required to respond to a collection of information unless it displays a valid OMB control number.

PATENT APPLICATION FEE DETERMINATION RECORD Substitute for Form PTO-875	Application or Docket Number 12/477,742	Filing Date 06/03/2009	☐ To be Mailed

APPLICATION AS FILED – PART I

	(Column 1)	(Column 2)	SMALL ENTITY ☐		OR	OTHER THAN SMALL ENTITY	
FOR	NUMBER FILED	NUMBER EXTRA	RATE ($)	FEE ($)		RATE ($)	FEE ($)
☐ BASIC FEE (37 CFR 1.16(a), (b), or (c))	N/A	N/A	N/A			N/A	
☐ SEARCH FEE (37 CFR 1.16(k), (i), or (m))	N/A	N/A	N/A			N/A	
☐ EXAMINATION FEE (37 CFR 1.16(o), (p), or (q))	N/A	N/A	N/A			N/A	
TOTAL CLAIMS (37 CFR 1.16(i))	minus 20 =	*	X $ =		OR	X $ =	
INDEPENDENT CLAIMS (37 CFR 1.16(h))	minus 3 =	*	X $ =			X $ =	
☐ APPLICATION SIZE FEE (37 CFR 1.16(s))	If the specification and drawings exceed 100 sheets of paper, the application size fee due is $250 ($125 for small entity) for each additional 50 sheets or fraction thereof. See 35 U.S.C. 41(a)(1)(G) and 37 CFR 1.16(s).						
☐ MULTIPLE DEPENDENT CLAIM PRESENT (37 CFR 1.16(j))							
* If the difference in column 1 is less than zero, enter "0" in column 2.			TOTAL			TOTAL	

APPLICATION AS AMENDED – PART II

AMENDMENT		(Column 1)		(Column 2)	(Column 3)	SMALL ENTITY		OR	OTHER THAN SMALL ENTITY	
	06/03/2009	CLAIMS REMAINING AFTER AMENDMENT		HIGHEST NUMBER PREVIOUSLY PAID FOR	PRESENT EXTRA	RATE ($)	ADDITIONAL FEE ($)		RATE ($)	ADDITIONAL FEE ($)
	Total (37 CFR 1.16(i))	* 3	Minus	** 20	= 0	X $ =		OR	X $52=	0
	Independent (37 CFR 1.16(h))	* 3	Minus	***3	= 0	X $ =		OR	X $220=	0
	☐ Application Size Fee (37 CFR 1.16(s))									
	☐ FIRST PRESENTATION OF MULTIPLE DEPENDENT CLAIM (37 CFR 1.16(j))							OR		
						TOTAL ADD'L FEE		OR	TOTAL ADD'L FEE	0

AMENDMENT		(Column 1)		(Column 2)	(Column 3)					
		CLAIMS REMAINING AFTER AMENDMENT		HIGHEST NUMBER PREVIOUSLY PAID FOR	PRESENT EXTRA	RATE ($)	ADDITIONAL FEE ($)		RATE ($)	ADDITIONAL FEE ($)
	Total (37 CFR 1.16(i))	*	Minus	**	=	X $ =		OR	X $ =	
	Independent (37 CFR 1.16(h))	*	Minus	***	=	X $ =		OR	X $ =	
	☐ Application Size Fee (37 CFR 1.16(s))									
	☐ FIRST PRESENTATION OF MULTIPLE DEPENDENT CLAIM (37 CFR 1.16(j))							OR		
						TOTAL ADD'L FEE		OR	TOTAL ADD'L FEE	

* If the entry in column 1 is less than the entry in column 2, write "0" in column 3.

** If the "Highest Number Previously Paid For" IN THIS SPACE is less than 20, enter "20".

*** If the "Highest Number Previously Paid For" IN THIS SPACE is less than 3, enter "3".

The "Highest Number Previously Paid For" (Total or Independent) is the highest number found in the appropriate box in column 1.

Legal Instrument Examiner:
/JAMES MASON/

This collection of information is required by 37 CFR 1.16. The information is required to obtain or retain a benefit by the public which is to file (and by the USPTO to process) an application. Confidentiality is governed by 35 U.S.C. 122 and 37 CFR 1.14. This collection is estimated to take 12 minutes to complete, including gathering, preparing, and submitting the completed application form to the USPTO. Time will vary depending upon the individual case. Any comments on the amount of time you require to complete this form and/or suggestions for reducing this burden, should be sent to the Chief Information Officer, U.S. Patent and Trademark Office, U.S. Department of Commerce, P.O. Box 1450, Alexandria, VA 22313-1450. DO NOT SEND FEES OR COMPLETED FORMS TO THIS ADDRESS. **SEND TO: Commissioner for Patents, P.O. Box 1450, Alexandria, VA 22313-1450.**

If you need assistance in completing the form, call 1-800-PTO-9199 and select option 2.