US 20100171642A1

(19) United States

(12) Patent Application Publication

Hassan et al.

(10) Pub. No.: US 2010/0171642 A1

(43) Pub. Date: Jul. 8, 2010

(54) **MOBILE CONTROL NODE SYSTEM AND METHOD FOR VEHICLES**

(76) Inventors: **Hasib Hassan**, Belleville, MI (US); **Devendra Bajpai**, Bloomfield Hills, MI (US); **Uri Levy**, Toronto (CA)

Correspondence Address:
MAGNA INTERNATIONAL, INC.
337 MAGNA DRIVE
AURORA, ON L4G-7K1 (CA)

(21) Appl. No.: **12/664,110**

(22) PCT Filed: **Jun. 19, 2008**

(86) PCT No.: **PCT/CA2008/001174**

§ 371 (c)(1), (2), (4) Date: **Dec. 11, 2009**

Related U.S. Application Data

(60) Provisional application No. 60/944,917, filed on Jun. 19, 2007, provisional application No. 60/992,134, filed on Dec. 4, 2007, provisional application No. 60/983,414, filed on Oct. 29, 2007, provisional application No. 60/983,403, filed on Oct. 29, 2007.

Publication Classification

(51) **Int. Cl.**
G08G 1/123 (2006.01)

(52) **U.S. Cl.** **340/992**

(57) **ABSTRACT**

In a mobile control node system and method for a vehicle (**630**), the mobile control node (**624**) can interact, via a bi-directional radio link (**642**), with a transceiver processor unit (**628**) in the vehicle. The transceiver processor unit (**628**) is connected to a vehicle control system (**120**) and allows the mobile control node (**624**) to function as an input and output node on a vehicle control network (**632**), allowing remote control of the vehicle and providing functions such as remote or passive keyless entry. Additionally, the system provides a vehicle location function wherein the range and bearing between the mobile control node (**624**) and the vehicle (**630**) can he determined and displayed on the mobile control node (**624**). The range and bearing are calculated by determining the range between the mobile control node (**624**) and vehicle (**630**), preferably using a time of flight methodology, and by processing the travel distance of the mobile control node and compass data in order to triangulate the position of the vehicle (**630**) relative to the mobile control node (**624**).

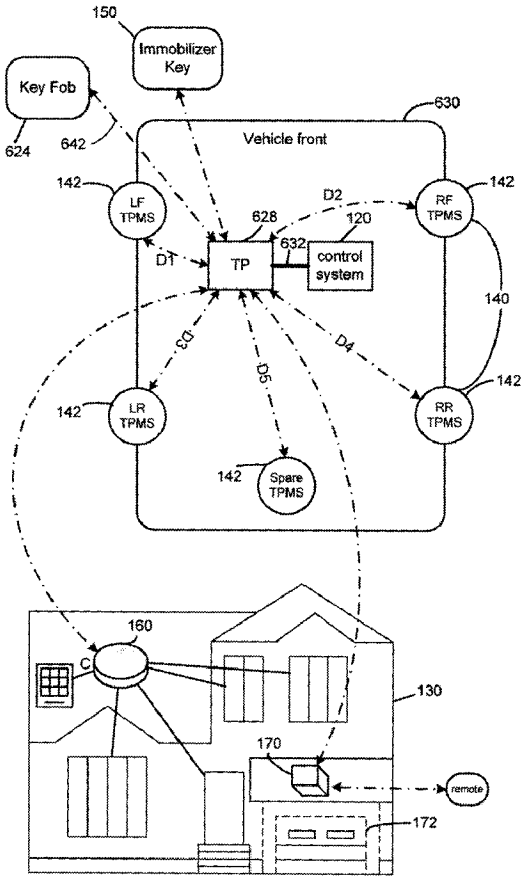

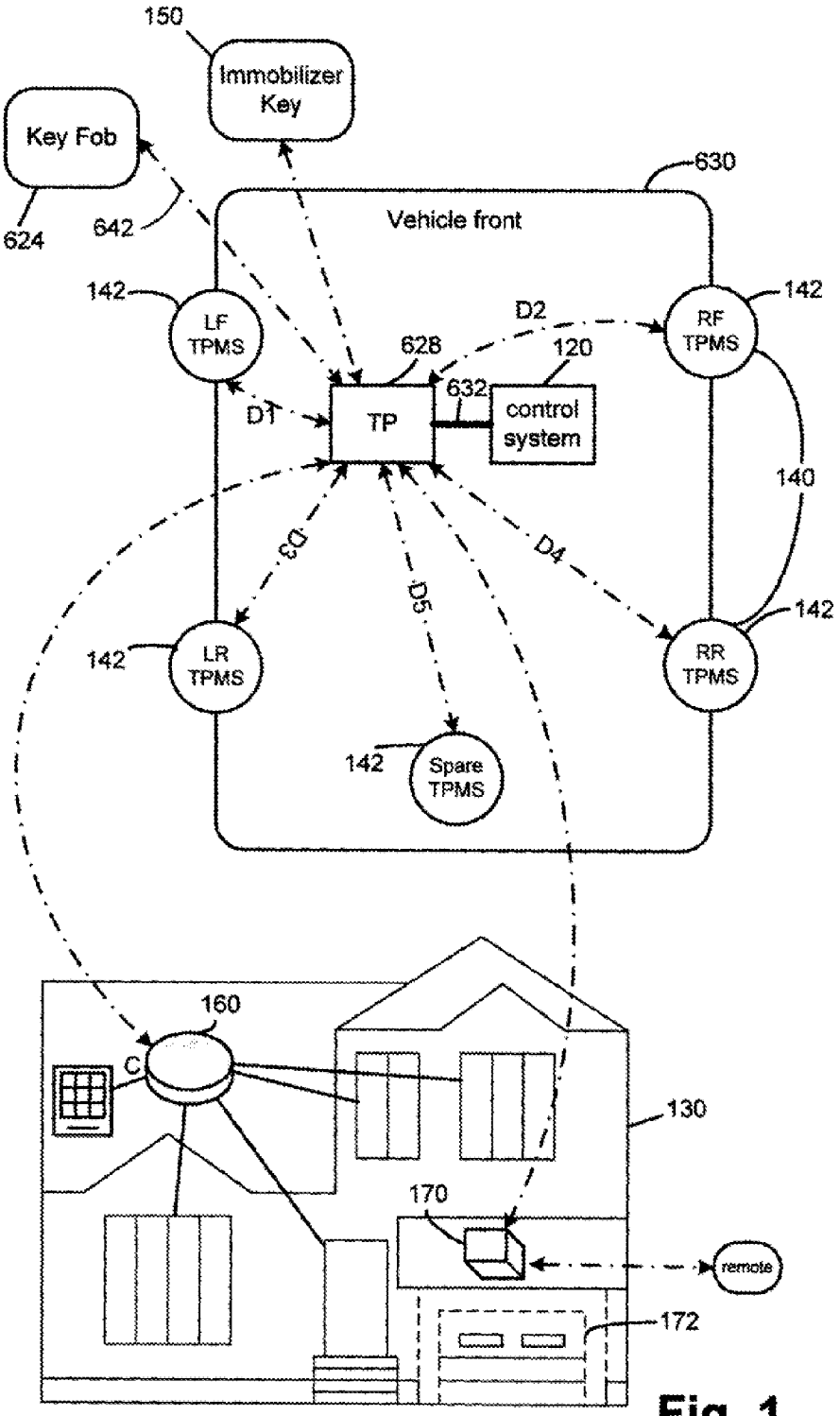

Fig. 1

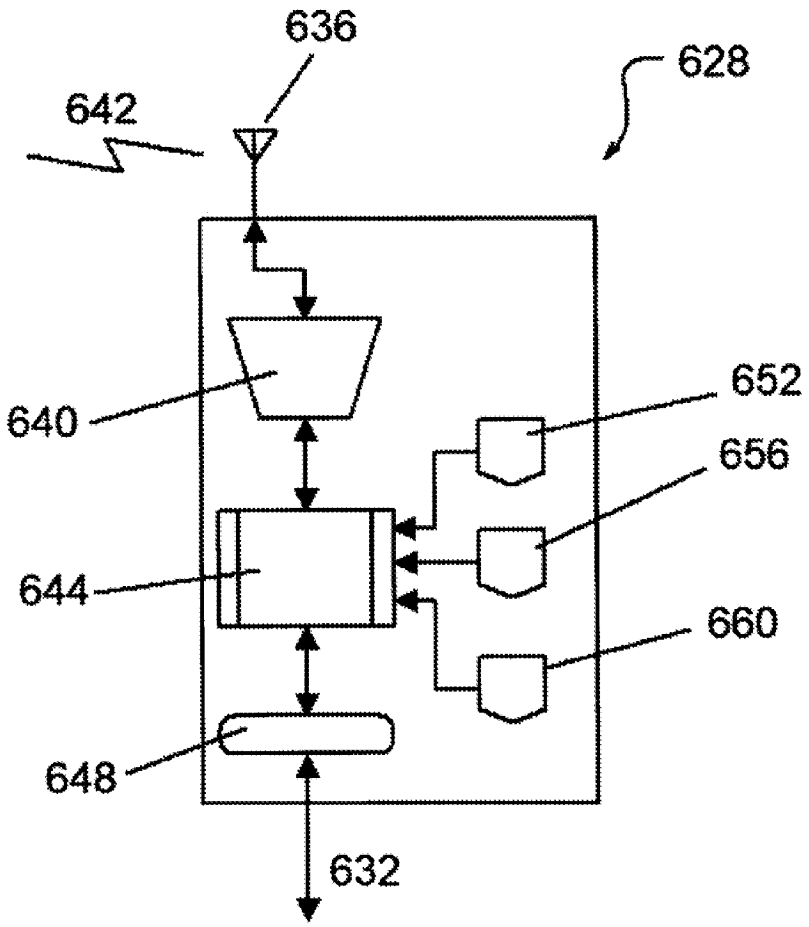

Fig. 2

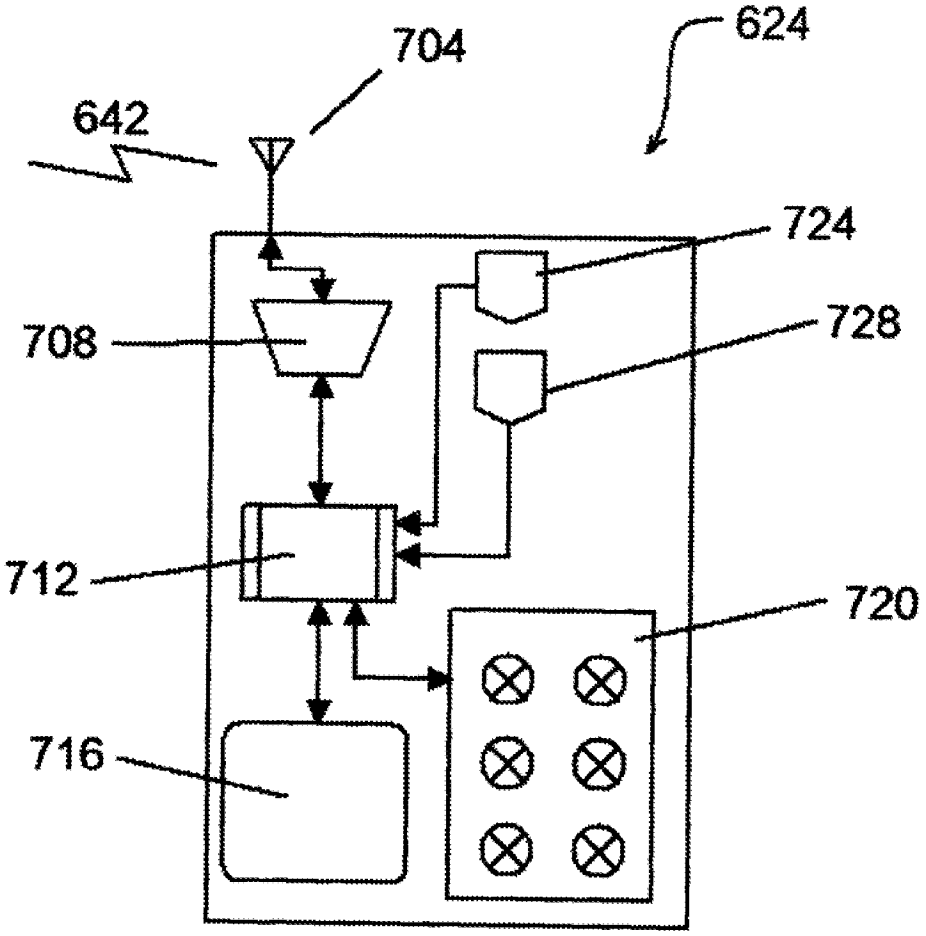

Fig. 3

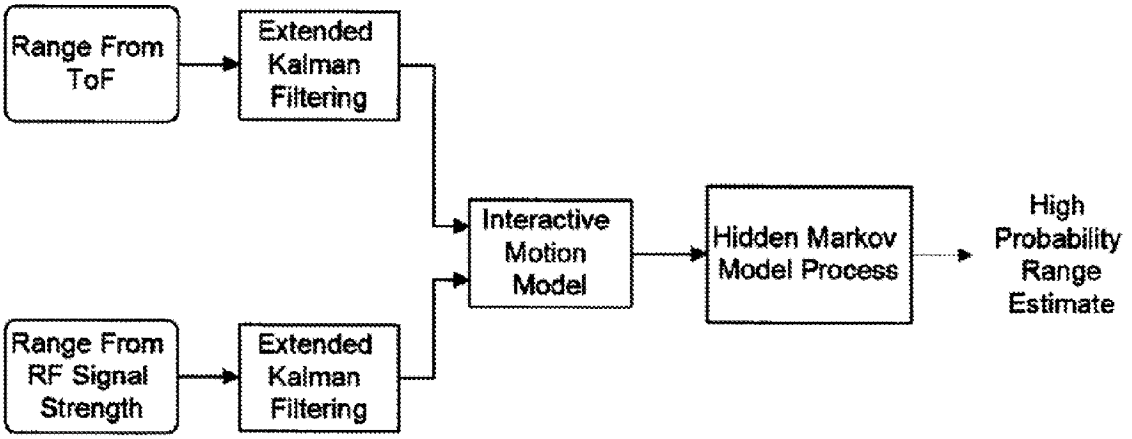

Fig. 4

DOCKET ALARM

Explore Litigation Insights

Docket Alarm provides insights to develop a more informed litigation strategy and the peace of mind of knowing you're on top of things.

Real-Time Litigation Alerts

Keep your litigation team up-to-date with **real-time alerts** and advanced team management tools built for the enterprise, all while greatly reducing PACER spend.

Our comprehensive service means we can handle Federal, State, and Administrative courts across the country.

Advanced Docket Research

With over 230 million records, Docket Alarm's cloud-native docket research platform finds what other services can't. Coverage includes Federal, State, plus PTAB, TTAB, ITC and NLRB decisions, all in one place.

Identify arguments that have been successful in the past with full text, pinpoint searching. Link to case law cited within any court document via Fastcase.

Analytics At Your Fingertips

Learn what happened the last time a particular judge, opposing counsel or company faced cases similar to yours.

Advanced out-of-the-box PTAB and TTAB analytics are always at your fingertips.

API

Docket Alarm offers a powerful API (application programming interface) to developers that want to integrate case filings into their apps.

LAW FIRMS

Build custom dashboards for your attorneys and clients with live data direct from the court.

Automate many repetitive legal tasks like conflict checks, document management, and marketing.

FINANCIAL INSTITUTIONS

Litigation and bankruptcy checks for companies and debtors.

E-DISCOVERY AND LEGAL VENDORS

Sync your system to PACER to automate legal marketing.