United States Patent [19]

Layton et al.

[11] **4,301,812**

[45] **Nov. 24, 1981**

[54] **MIDSTREAM SAMPLING DEVICE**

[75] Inventors: **Terry N. Layton,** Arlington Heights; **Carl J. Steigerwald,** Wauconda, both of Ill.

[73] Assignee: **The Kendall Company,** Boston, Mass.

[21] Appl. No.: **102,673**

[22] Filed: **Dec. 12, 1979**

[51] **Int. Cl.**[3] **A61B 10/00;** G01N 1/10

[52] **U.S. Cl.** **128/761;** 73/863.52; 128/762

[58] **Field of Search** ..... 73/421 R; 128/761, 762, 128/295; 4/144.3

[56] **References Cited**

U.S. PATENT DOCUMENTS

3,635,091	1/1972	Linzer et al.	73/421 R
3,680,543	8/1972	Cox	128/295 X
3,750,647	8/1973	Gleason et al.	128/761
3,750,648	8/1973	Gleason et al.	128/761
3,859,671	1/1975	Tomasello	128/762 X
3,929,412	12/1975	Villari	128/295 X
4,106,490	8/1978	Spilman et al.	128/761

Primary Examiner—Daniel M. Yasich
Attorney, Agent, or Firm—Powell L. Sprunger

[57] **ABSTRACT**

A midstream sampling device comprising, a housing having a chamber, a distal outer mouth defining an outer port, an inner mouth in the chamber defining an inner port, and an outlet opening. The housing has a first cavity communicating between the inner port and the outlet opening, and a second cavity at least partially below the inner mouth and communicating with the outer port. The housing has an elongated depending post having a channel, and an upper aperture communicating with at least one of the cavities. The device also has a receptacle having a chamber communicating with the outlet opening.

14 Claims, 15 Drawing Figures

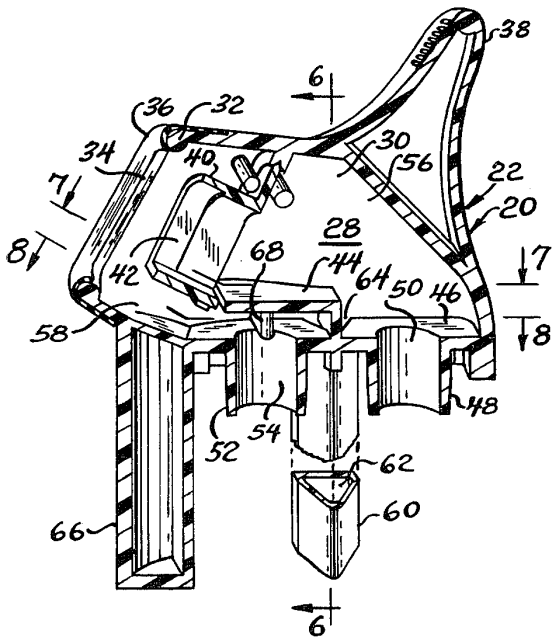

Fig. 1

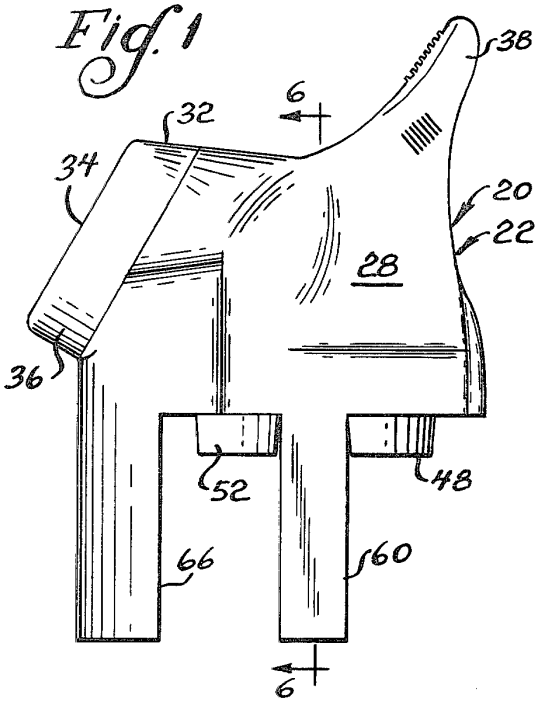

Fig. 2

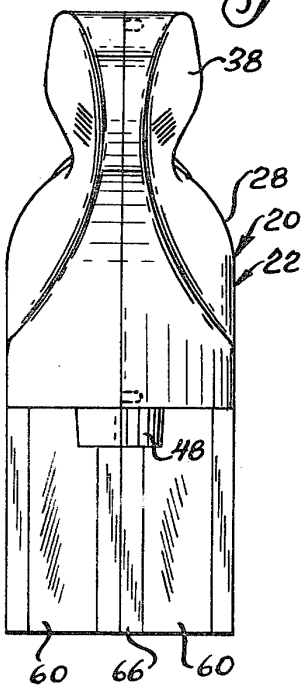

Fig. 3

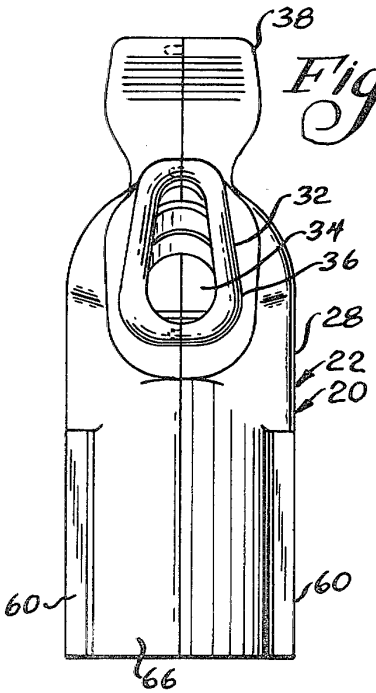

Fig. 4

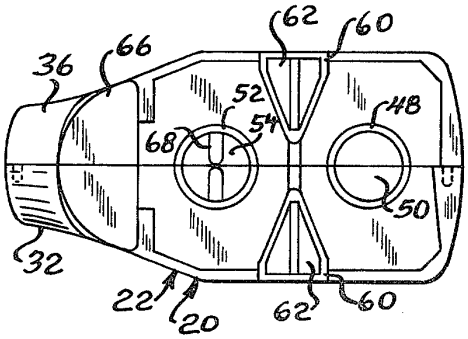

Fig. 5

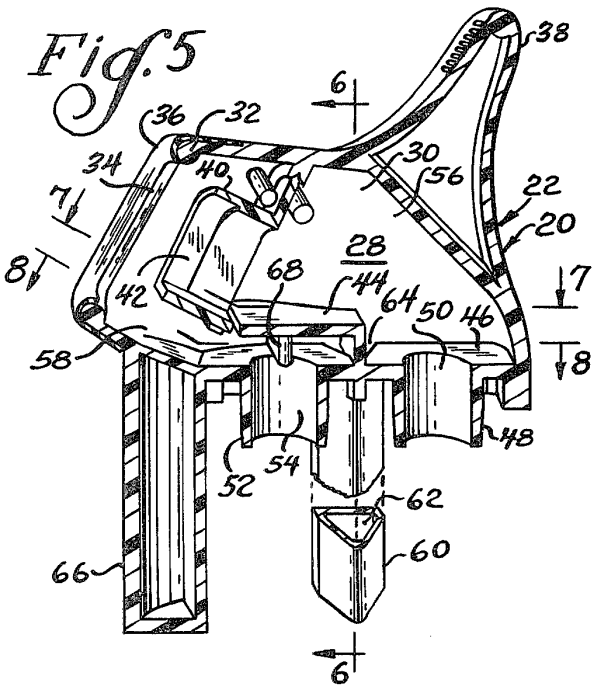

Fig. 6

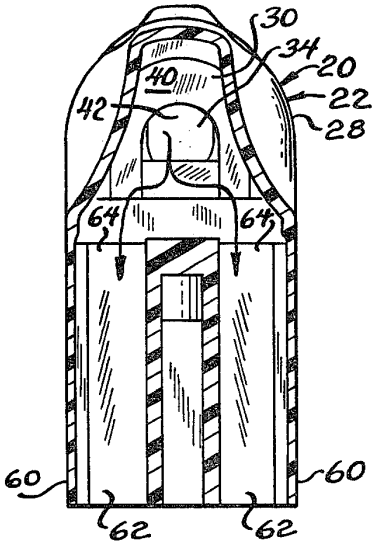

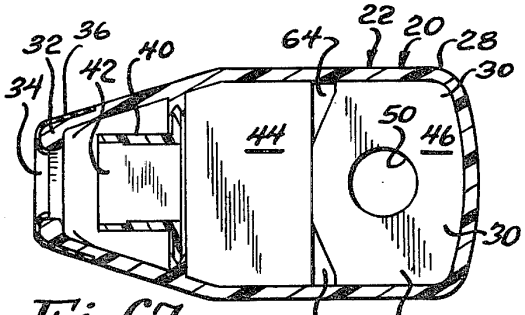

Fig. 7

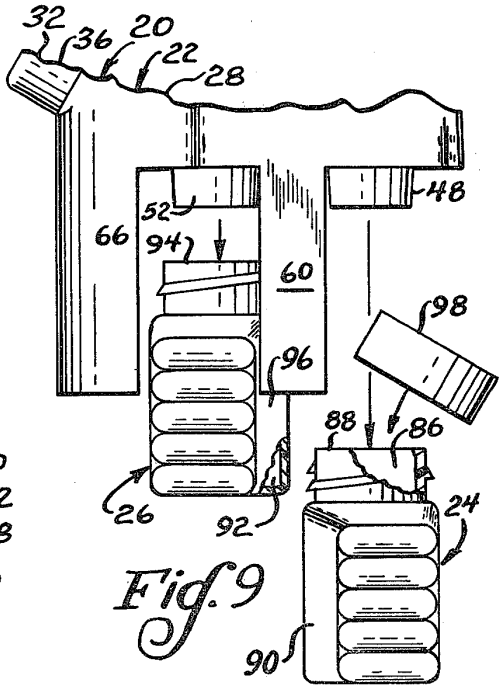

Fig. 9

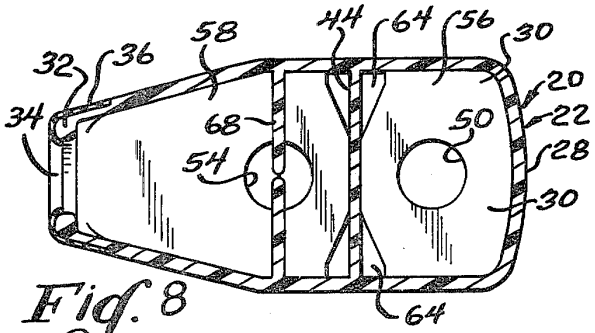

Fig. 8

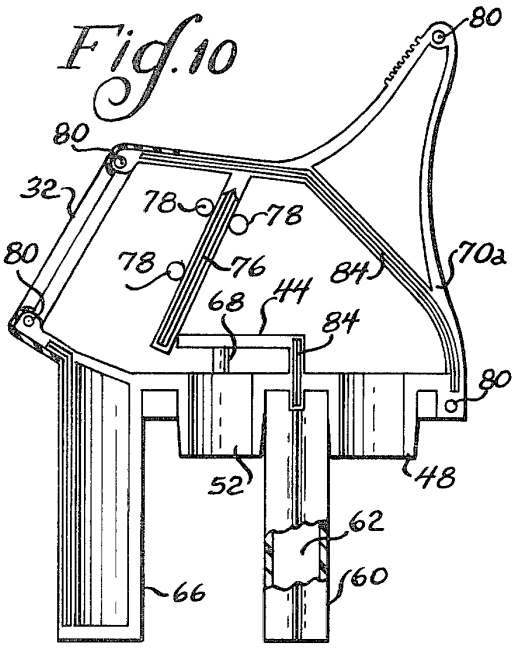

Fig. 10

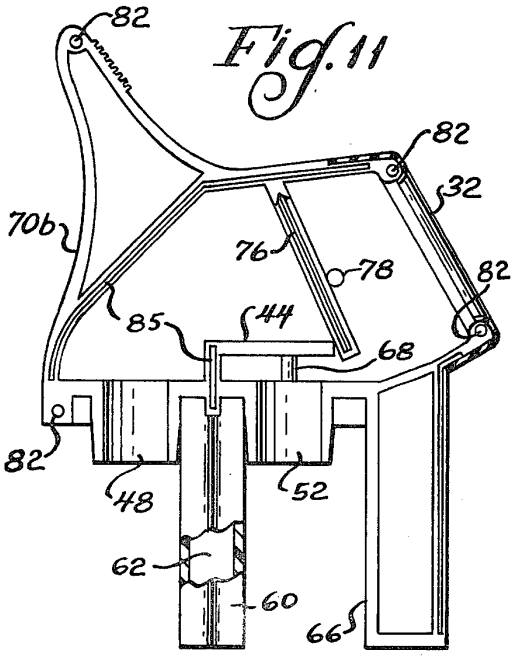

Fig. 11

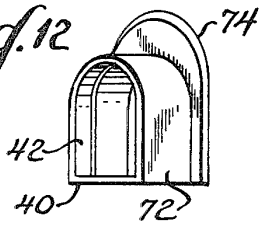

Fig. 12

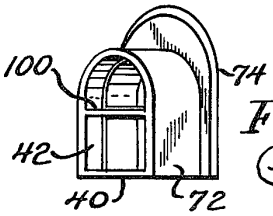

Fig. 13

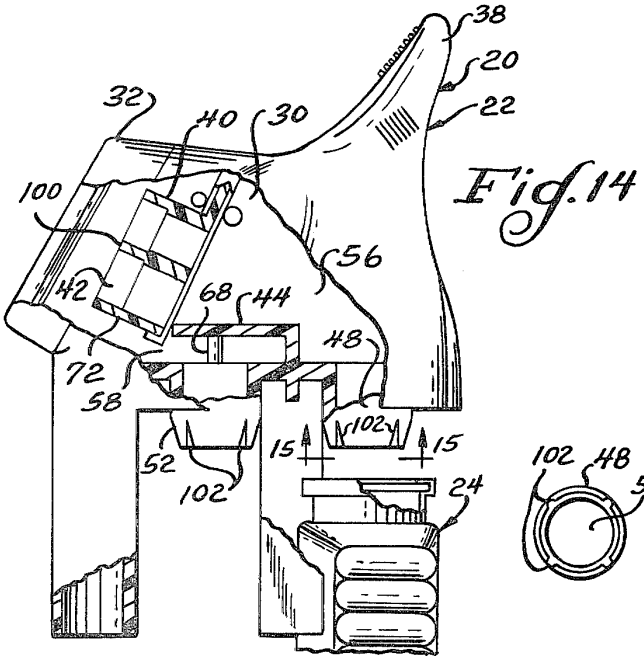

Fig. 14

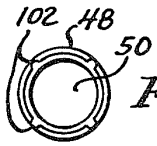

Fig. 15

MIDSTREAM SAMPLING DEVICE

BACKGROUND OF THE INVENTION

The present invention relates to midstream sampling devices.

It is frequently desirable to obtain a clean sample of urine from a patient for purposes of analysis. A number of devices have been proposed for obtaining such a sample from male patients, but it has been more difficult to obtain a clean sample of urine from a female patient. A clean sample requires that the urine not touch a non-sterile area, such as the labia in the case of female patients. Also, it is desirable to collect the midstream portion of the urine discharge, since the initial portion of the discharge may become contaminated due to retrograde contamination in the urethra.

SUMMARY OF THE INVENTION

A principal feature of the present invention is the provision of an improved device for collecting the midstream portion of a urine discharge from a female patient.

The device of the present invention comprises, a housing having a chamber, a distal outer mouth defining an outer port, and an inner mouth in the chamber defining an inner port generally aligned with the outer port. The housing has a first lower proximal outlet opening, and a first proximal cavity communicating between the inner port and the first outlet opening. The housing has a second lower distal outlet opening, and a second distal cavity at least partially below the inner mouth and communicating between the outer port and the second outlet opening. The housing has a pair of depending elongated posts adjacent opposed sides of the housing intermediate the first and second outlet openings, with the ports defining a pair of channels extending through the posts, and defining a pair of apertures communicating between the channels and a lower portion of the first and second cavities. The device has a first receptacle releasably attached to the housing and having a chamber in the first receptacle, and a second receptacle releasably attached to the housing and having a chamber in the second receptacle.

A feature of the present invention is that the outer mouth may be positioned inside a labia of a patient to capture a urine sample without contamination by the labia.

Another feature of the invention is that the initial portion of the discharge passes through the second cavity to the second outlet opening due to its relatively low velocity.

Yet another feature of the invention is that the second receptacle communicates with the second outlet opening to capture the initial portion of the urine discharge.

A further feature of the invention is that the midstream portion of the discharge passes through the inner mouth due to its relatively high velocity.

Still another feature of the invention is that the first receptacle communicates with the first outlet opening to capture the midstream portion of the urine discharge.

A further feature of the invention is that overflow of liquid from the first or second receptacle passes through the apertures into the posts and out of the housing.

A feature of the present invention is that the overflow liquid is disposed of through the posts without wetting the first or second receptacle.

Further features will become more fully apparent in the following description of the embodiments of this invention and from the appended claims.

DESCRIPTION OF THE DRAWINGS

In the drawings:

FIG. **1** is a side elevational view showing a housing of a midstream sampling device of the present invention;

FIG. **2** is a rear elevational view of the housing of FIG. **1**;

FIG. **3** is a front elevational view of the housing of FIG. **1**;

FIG. **4** is a lower plan view of the housing of FIG. **1**;

FIG. **5** is a fragmentary sectional view of the housing of FIG. **1**;

FIG. **6** is a sectional view taken substantially as indicated along the line **6—6** of FIG. **5**;

FIG. **7** is a sectional view taken substantially as indicated along the line **7—7** of FIG. **5**;

FIG. **8** is a sectional view taken substantially as indicated along the line **8—8** of FIG. **5**;

FIG. **9** is a fragmentary elevational view of the housing of FIG. **1** and a pair of receptacles which are releasably attached to the housing;

FIGS. **10** and **11** are elevational views, partly broken away, of preformed halves which may be assembled into the housing of FIG. **1**;

FIG. **12** is a perspective view of an inner mouth for the housing of FIGS. **10** and **11**;

FIG. **13** is a perspective view of another embodiment of the mouth of FIG. **12**;

FIG. **14** is a fragmentary elevational view illustrating the device with the mouth of FIG. **13**; and

FIG. **15** is a lower view taken substantially as indicated along the line **15—15** of FIG. **14**.

DESCRIPTION OF THE PREFERRED EMBODIMENTS

Referring now to FIGS. **1–9**, there is shown a midstream sampling device generally designated **20** having a housing **22** and first and second receptacles **24** (FIG. **14**) and **26** (FIG. **9**), respectively. The housing **22** has an outer wall **28** defining an internal chamber **30**, and a distal outer oval mouth **32** defining an outer port **34**. In a preferred form, the outer wall **28** is recessed adjacent the outer mouth **32** to receive a resilient bumper member **36** extending peripherally around the outer port **34**, as shown. The housing **22** has an outwardly and upwardly extending proximal portion defining a handle **38** for the device during use. The housing may be made from a suitable material, such as plastic, and the bumper member **36** may be constructed from rubber.

The housing **22** has an inner mouth **40** generally aligned with the outer mouth **32** and defining an inner port **42**. The housing has a ledge **44** extending from a lower portion of the inner mouth **40** to a central portion of a lower wall **46** of the housing. The lower wall **46** has a first proximal depending tubular extension **48** defining a first proximal outlet opening **50**, and a more distal second depending tubular extension **52** defining a second distal outlet opening **54**. As shown, the inner mouth **40** and ledge **44** define a first cavity **56** extending between the inner port **42** and first outlet opening **50**, and a second cavity **58** partially below the inner mouth **40** and communicating between the outer port **34** and the second outlet opening **54**.

The housing **22** has a pair of hollow equal-length depending posts **60** located adjacent opposed sides of

DOCKET ALARM

Explore Litigation Insights

Docket Alarm provides insights to develop a more informed litigation strategy and the peace of mind of knowing you're on top of things.

Real-Time Litigation Alerts

Keep your litigation team up-to-date with **real-time alerts** and advanced team management tools built for the enterprise, all while greatly reducing PACER spend.

Our comprehensive service means we can handle Federal, State, and Administrative courts across the country.

Advanced Docket Research

With over 230 million records, Docket Alarm's cloud-native docket research platform finds what other services can't. Coverage includes Federal, State, plus PTAB, TTAB, ITC and NLRB decisions, all in one place.

Identify arguments that have been successful in the past with full text, pinpoint searching. Link to case law cited within any court document via Fastcase.

Analytics At Your Fingertips

Learn what happened the last time a particular judge, opposing counsel or company faced cases similar to yours.

Advanced out-of-the-box PTAB and TTAB analytics are always at your fingertips.

API

Docket Alarm offers a powerful API (application programming interface) to developers that want to integrate case filings into their apps.

LAW FIRMS

Build custom dashboards for your attorneys and clients with live data direct from the court.

Automate many repetitive legal tasks like conflict checks, document management, and marketing.

FINANCIAL INSTITUTIONS

Litigation and bankruptcy checks for companies and debtors.

E-DISCOVERY AND LEGAL VENDORS

Sync your system to PACER to automate legal marketing.