JULY 2003
Microchip Technology Incorporated
MICROSOLUTIONS

IN THIS ISSUE

MICROCHIP

Microchip Technology Jumps to Number One in Worldwide 8-bit Microcontroller Shipments!

PIC® microcontroller shipments grow 30 percent despite industry downturn

Thanks to more than 40,000 worldwide customers, Microchip has achieved the number one position in worldwide 8-bit microcontroller unit shipments, according to industry analyst Gartner Dataquest's recently released 2002 Microcontroller Market Share and Unit Shipments report††. From 2001 to 2002, unit sales for Microchip's PIC microcontrollers grew 30 percent, despite challenging business conditions, to attain the number one ranking.

This announcement demonstrates the dramatic growth and market acceptance Microchip's proprietary PIC microcontroller architecture has achieved since the company's inception in 1989. According to the yearly Gartner Dataquest rankings, Microchip placed 20th in worldwide unit shipments in 1990, rising steadily to eighth in 1993, fifth in 1996, second in 1997 through 2001 and now number one in 2002.

Achieving these milestones illustrates that Microchip's PIC microcontrollers deliver a compelling solution for embedded designers worldwide. Today Microchip serves more than 40,000 customers in the consumer, automotive, industrial control, office automation and communications market.

The PIC microcontroller architecture is driven by a modified Harvard RISC (Reduced Instruction Set Computing) instruction set that provides an easy migration path from 8- to 84-pins and from 1k byte to 128k bytes of program data memory. Today, Microchip offers more than 180 PIC devices in reprogrammable (Flash), one-time-programmable (OTP), and read-only memory (ROM) program memory configurations, featuring numerous on-chip peripherals.

"Microchip became number one by pioneering the field programmable segment of the 8-bit microcontroller market with one-time-programmable (OTP) and Flash microcontrollers leadership," said Microchip's CEO and President, Steve Sanghi. "Leading engineers worldwide continue to use the PIC microcontroller architecture because we provide a competitive advantage to their own businesses with faster time to market, lower total system cost and low-risk product development."

Mitch Little, vice president of Worldwide Sales at Microchip Technology said, "Our deepest gratitude to our worldwide customers and distribution partners for enabling this number one ranking to occur."

Microchip provides world-class easy-to-use development tools, allowing engineers to design quickly and efficiently with PIC microcontrollers. Microchip features a broad portfolio of easy-to-learn development tools to support its PIC microcontrollers: programmers, in-circuit emulators, C compilers, in-circuit debuggers, assemblers, editors, linkers, simulators, librarians and more. Engineers can manage all related Microchip development tools from the single MPLAB® Integrated Development Environment (IDE) platform. With a common core of development tools, Microchip customers can easily transition to new microcontrollers without having to purchase and learn new development tools.

For more information go to: www.microchip.com/one

††Gartner Dataquest, 2002 Microcontroller Market Share and Unit Shipments, Tom Starnes, June 2003.

For the detailed results of the MCU market, contact Gartner Dataquest at (480) 468-8000 or www.gartner.com for the report 2002 Microcontroller Market Share and Unit Shipments. For more information on how Microchip's PICmicro® microcontrollers provide high performance solutions for leading embedded systems designers, contact any authorized Microchip distributor or sales representative around the world for more information, or visit www.microchip.com/one

For more information visit www.microchip.com

icrochip Technology Introduces New, gh Performance, 150 mA CMOS LDO

rochip has introduced the **TC1017**, high-accuracy (typically ±0.5%) CMOS rade for bipolar low dropout regulators (LDO). The TC1017 is offered in a 70 package, which represents a 50% reduced footprint vs. the popular T-23 package.

TC1017 offers better overall performance than competing devices: better l/line transient response, higher output voltage accuracy and supports higher out current requirements.

performance parameters for the TC1017 are:

150 mA output current

Can be used for lower I_{OUT}, such as, 80 mA, 100 mA, 120 mA

Smallest standard SC-70 package in the industry

50% smaller footprint than a SOT-23 package. Saves board space.

Very low supply (53 µA) and shutdown current (0.05 µA)

Extends battery life.

Low dropout voltage (285 mV at 150 mA)

Maximizes useable battery life.

Stability with small, 1 µF ceramic capacitors

Saves board space and reduces cost.

Excellent dynamic performance

Responds faster to line and load changes.

High output voltage accuracy (±0.5%)

Provides high-precision supply voltages.

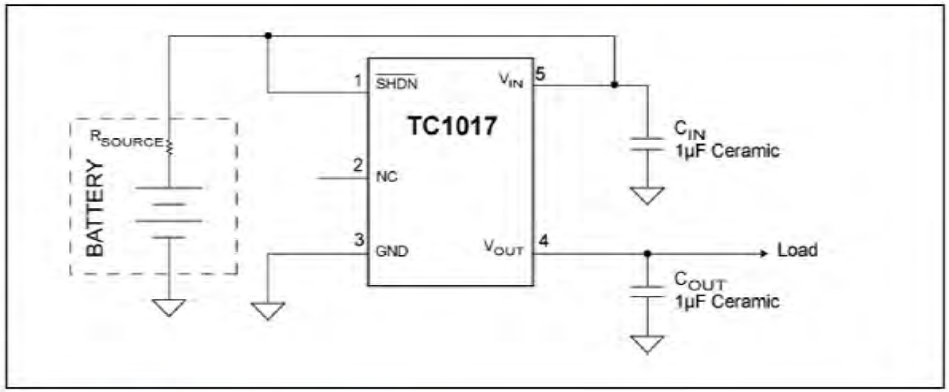

Figure 1. *TC1017 Typical Application Circuit*

The TC1017's features make it ideal for a variety of applications:

- Cellular and Cordless Phones
- Pagers
- PDAs & Laptops
- Digital Cameras & Camcorders
- Bar Code Scanners
- Flash, PC & PCMCIA Cards
- Modems, WLAN Cards/Devices
- Consumer Electronics
- Battery-operated Applications

For more information, contact any authorized Microchip sales representative or authorized distributor, or visit;

www.microchip.com/solutionstc1017

Cmicro® Power Managed Tips n' Tricks

Input / Output Multiplexing

vidual diodes and or a combination of diodes can be enabled by driving I/Os n and low or switching to inputs (Z). The number of diodes (D) that can be trolled depends on the number of I/Os (GP) used.

e equation is: D = GP x (GP - 1).

mple – Six LEDs on three I/O pins

GPx			LEDs					
0	1	2	1	2	3	4	5	6
0	0	0	0	0	0	0	0	0
0	1	Z	1	0	0	0	0	0
1	0	Z	0	1	0	0	0	0
Z	0	1	0	0	1	0	0	0
Z	1	0	0	0	0	1	0	0
0	Z	1	0	0	0	0	1	0
1	Z	0	0	0	0	0	0	1
0	0	1	0	0	1	0	1	0
0	1	0	1	0	0	1	0	0
0	1	1	1	0	0	0	1	0
1	0	0	0	1	0	0	0	1
1	0	1	0	1	1	0	0	0
1	1	0	0	0	0	1	0	1
1	1	1	0	0	0	0	0	0

re 1. Six LEDs on three I/O Pins

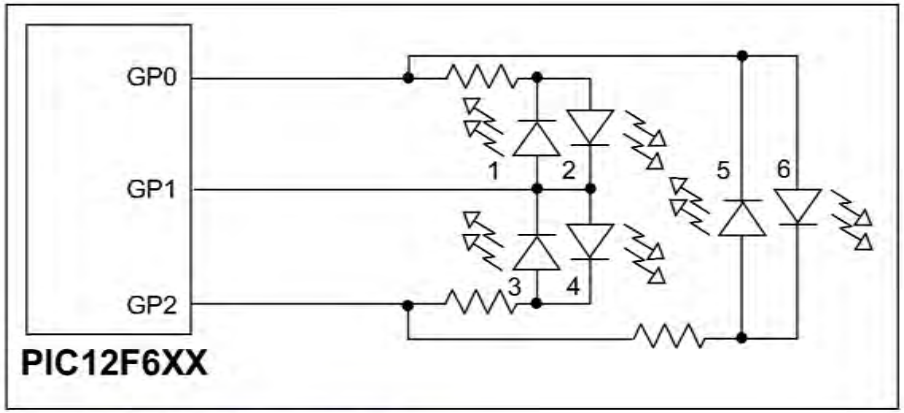

Figure 2. *PIC12F6XX Functional Block Diagram*

For more information, contact any authorized Microchip sales representative or authorized distributor, or visit

www.microchip.com/solutionstipstricksjuly

Agilent Technologies

Hint 2 Implementing a simple voltage follower using a digital potentiometer

By Frank Rossini, Solutions-Cubed

e following technical article is the second in a series of "Hints" reprinted by permission m the Agilent Technologies' Test & Measurement Group's publication, "5 Hints for bugging Microcontroller-based Designs."

al potentiometers or pots have many uses in today's embedded systems. In this mple, we will implement an embedded "voltage follower" using a PIC16F873 microcon- er and a MCP41010 digital pot, both from Microchip Technology, Inc. Basically, the ® microcontroller (MCU) will read the analog voltage and instruct the digital pot to oduce the input voltage. Because we are interested in analyzing the analog input and ut and the smart plug-in interface (SPI™) to the digital pot, the mixed-signal analysis abilities of the Agilent 54642D mixed signal oscilloscope (MSO) will come in handy.

igning the Voltage Follower

re 1 shows the simplified system used for testing, which consists of a filtered analog t to a PIC16F873, three digital lines connecting the PIC MCU to the MCP41010 pot, the output of the pot. Two analog and three digital lines on the oscilloscope monitor system.

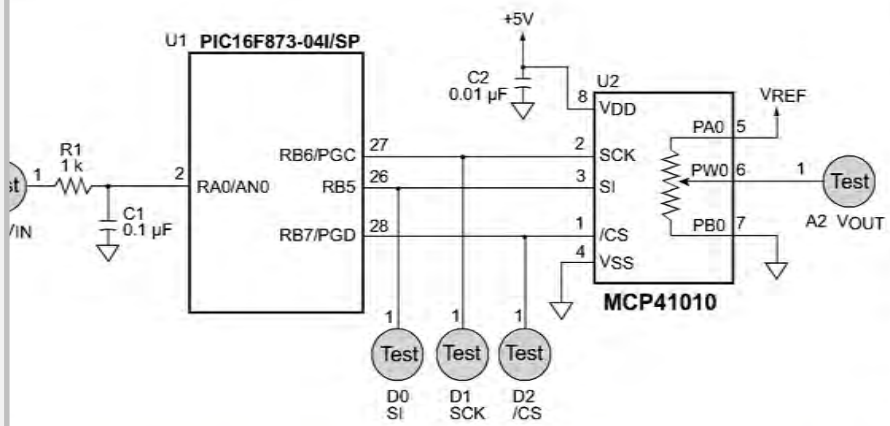

re 1. *Simplified system diagram showing the filtered analog input to a PIC16F873, three digital connecting the PIC MCU to the MCP41010 digital pot, and the output of the pot. Two analog and three digital lines on the 54642D mixed signal oscilloscope monitor the system.*

Analyzing the Analog Input and Digital Output

The top analog trace in **Figure 2a** represents the input voltage, the analog voltage reading at the bottom of the figure represents the digital output for the SPI. Notice how the output voltage changes after the /CS line is un-asserted on the SPI bus. It is also worth noting that the 54642D MSO has built-in SPI triggering. You can select the lines to use for CS, Clock, and Data, pick between rising and falling edge clocked data, and even select the value of the data byte to trigger on.

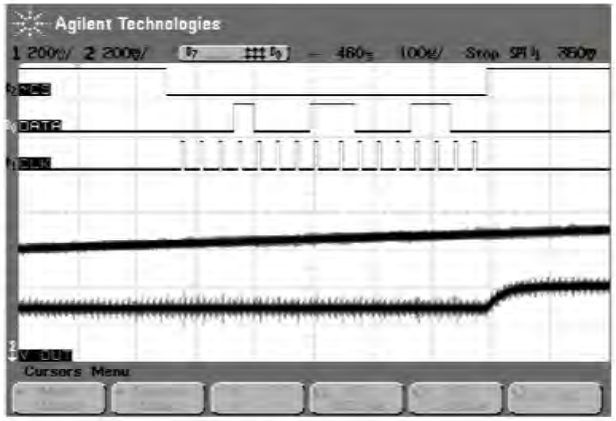

Figure 2a. *Measurement of the test system showing the input voltage (analog trace on top) and the digital output (analog voltage on the bottom).*

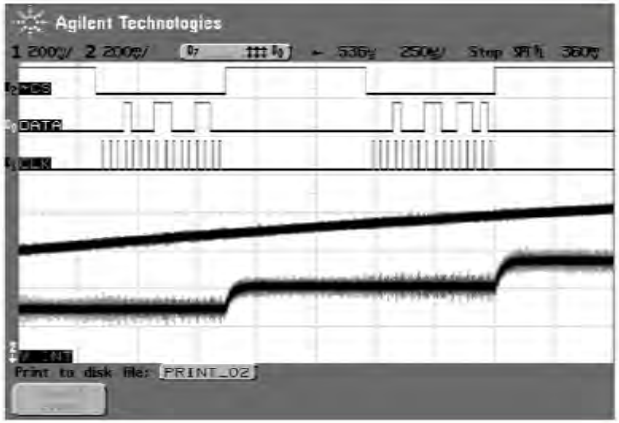

Figure 2b. *Another view of the test system with two transitions.*

Hint 2 Implementing a simple voltage follower using a digital potentiometer, (continued)

sine-wave screen shown in **Figure 3** displays the flexibility of the 54642D. Using deep nory, a feature that makes the MSO very easy to use, the time base can be expanded to d the specific SPI data for each analog section. In addition to SPI triggering, the MSO has gering features for USB, I²C™, and CAN Bus. Other common measurements, such as, se delay and frequency, are also easily displayed. Only three digital channels were used is example; by using the 13 additional digital inputs of the oscilloscope, more data can be ved.

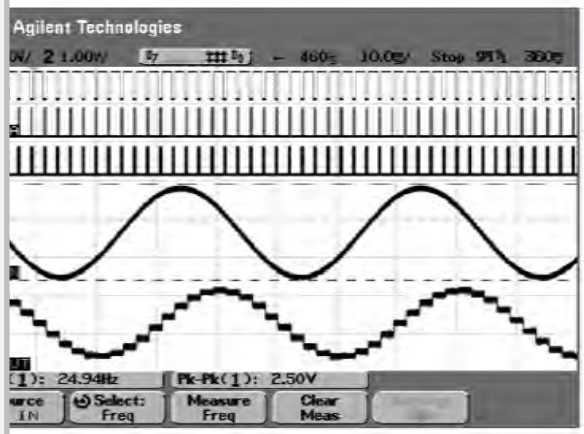

Figure 3. *A sine wave screen showing the digital potentiometer following an analog input.*

following abbreviated C code reads the input voltage on the Channel 0 A/D of the PIC J, converts it to an 8-bit value, and sends the result directly to the digital pot via the SPI. allows the designer to input various voltages and easily test the potentiometer output. format of the data sent to the pot is beyond the scope of this document and is available Microchip if desired.

```
int8 Get_Voltage(int8 Channel, int8 Count)
{
   set_adc_channel(Channel);
   delay_us(200);                          //Sample & Hold Time
   Vavg = 0;
   for(x=0;x<Count;x++)                    // Take "Count" Samples
   {
      delay_us(50);                        // Sample & Hold Time
      Vavg = Vavg + (read_adc() >> 2);     // Use only 8 bits out of 10
   }
   Vavg = Vavg / Count;                    // Get Average
   return (int8)(Vavg);
}

void Digital_Pot_Control (int8 Pot_Output)
{
   output_high(CS_41010);                  //Start with CS line high
   output_low(DAT_41010);                  //Start with control lines low
   output_low(CLK_41010);                  //
   delay_cycles(2);                        //Small Delay
   output_low(CS_41010);                   //Assert Chip Select

   //Control Byte Loop - 8 bit constant
   Pot_Temp = 0x11;                        //Value = 00010001 (Write to Pot0)
   for(x=1;x<9;x++)                        // Send 8 bits
   {
      if( bit_test(Pot_Temp,7) == 1 )      //Test for one or zero
         output_high(DAT_41010);
      else
         output_low(DAT_41010);
      shift_left(&Pot_Temp,1,0);
      output_high(CLK_41010);              //Clock in Data
      delay_cycles(2);                     //Small Delay
      output_low(CLK_41010);               //
      delay_cycles(2);                     //Small Delay
   }

   //Data Byte Loop - 8 bit constant
   Pot_Temp = Pot_Output;
   for(x=1;x<9;x++)                        //Send 8 bits
   {
      if( bit_test(Pot_Temp,7) == 1 )      //Test for one or zero
         output_high(DAT_41010);
      else
         output_low(DAT_41010);
      shift_left(&Pot_Temp,1,0);
      output_high(CLK_41010);              //Clock in Data
      delay_cycles(2);                     //Small Delay
      output_low(CLK_41010);               //
      delay_cycles(2);                     //Small Delay
   }
   output_low(DAT_41010);                  //
   output_high(CS_41010);                  //Unassert CS line
}

main()
{
   while(TRUE)                             //Main Program Loop Begin
   {
      restart_wdt();                       //Reset Watchdog Timer
      delay_ms(1);
      Simulated_TPS = Get_Voltage(Channel0, 1);  //Take 1 Sample
      Digital_Pot_Control(Simulated_TPS);
   }                                       //End of Main Program Loop
}                                          //End of main()
```

k here for additional information on the Agilent 54642D or information on the MCP41010.

DOCKET ALARM

Explore Litigation Insights

Docket Alarm provides insights to develop a more informed litigation strategy and the peace of mind of knowing you're on top of things.

Real-Time Litigation Alerts

Keep your litigation team up-to-date with **real-time alerts** and advanced team management tools built for the enterprise, all while greatly reducing PACER spend.

Our comprehensive service means we can handle Federal, State, and Administrative courts across the country.

Advanced Docket Research

With over 230 million records, Docket Alarm's cloud-native docket research platform finds what other services can't. Coverage includes Federal, State, plus PTAB, TTAB, ITC and NLRB decisions, all in one place.

Identify arguments that have been successful in the past with full text, pinpoint searching. Link to case law cited within any court document via Fastcase.

Analytics At Your Fingertips

Learn what happened the last time a particular judge, opposing counsel or company faced cases similar to yours.

Advanced out-of-the-box PTAB and TTAB analytics are always at your fingertips.

API

Docket Alarm offers a powerful API (application programming interface) to developers that want to integrate case filings into their apps.

LAW FIRMS

Build custom dashboards for your attorneys and clients with live data direct from the court.

Automate many repetitive legal tasks like conflict checks, document management, and marketing.

FINANCIAL INSTITUTIONS

Litigation and bankruptcy checks for companies and debtors.

E-DISCOVERY AND LEGAL VENDORS

Sync your system to PACER to automate legal marketing.