Trials@uspto.gov
571-272-7822

Paper 11
Entered: September 4, 2015

UNITED STATES PATENT AND TRADEMARK OFFICE

BEFORE THE PATENT TRIAL AND APPEAL BOARD

CIENA CORPORATION, CORIANT OPERATIONS, INC., CORIANT (USA) INC., AND FUJITSU NETWORK COMMUNICATIONS, INC.,
Petitioner,

v.

CAPELLA PHOTONICS, INC.,
Patent Owner.

Case IPR2015-00816
Patent RE42,368

Before JOSIAH C. COCKS, KALYAN K. DESHPANDE, and JAMES A. TARTAL, *Administrative Patent Judges*.

TARTAL, *Administrative Patent Judge*.

DECISION

Institution of *Inter Partes* Review
37 C.F.R. § 42.108

I. INTRODUCTION

Petitioner, Ciena Corporation, Coriant Operations, Inc., Coriant (USA) Inc., and Fujitsu Network Communications, Inc., filed a Petition requesting an *inter partes* review of claims 1–6, 9–13, and 15–22 of U.S. Patent No. RE42,368 ("the '368 patent"). Paper 1 ("Pet."). Patent Owner, Capella Photonics, Inc., filed a Preliminary Response. Paper 10 ("Prelim. Resp."). We have jurisdiction under 35 U.S.C. § 314(a), which provides that an *inter partes* review may not be instituted "unless . . . the information presented in the petition . . . shows that there is a reasonable likelihood that the petitioner would prevail with respect to at least 1 of the claims challenged in the petition."

Claims 1–6, 9–13, and 15–22 of the '368 patent are challenged in *Cisco Systems, Inc. v. Capella Photonics, Inc*., IPR2014-01166 ("IPR2014-01166"). We instituted trial in that proceeding on January 30, 2015. IPR2014-01166, Paper 8. In this proceeding, Petitioner asserts the same grounds of unpatentability on which trial was instituted in IPR2014-01166. *See* Pet. 5. Upon consideration of the Petition and the Preliminary Response, we conclude the information presented shows there is a reasonable likelihood that Petitioner would prevail in showing the unpatentability of the challenged claims. Accordingly, we authorize an *inter partes* review to be instituted as to claims 1–6, 9–13, and 15–22 of the '368 patent. Our factual findings and conclusions at this stage of the proceeding are based on the evidentiary record developed thus far (prior to Patent Owner's Response). Our final decision will be based on the record, as fully developed during trial.

II. BACKGROUND

A. The ’368 patent (Ex. 1001)

The ’368 patent, titled “Reconfigurable Optical Add-Drop Multiplexers with Servo Control and Dynamic Spectral Power Management Capabilities,” reissued May 17, 2011, from U.S. Patent No. 6,879,750 (“the ’750 patent”). Ex. 1001. The ’750 patent issued April 12, 2005, from application number 10/745,364, filed December 22, 2003.

According to the ’368 patent, “fiber-optic communications networks commonly employ wavelength division multiplexing (WDM), for it allows multiple information (or data) channels to be simultaneously transmitted on a single optical fiber by using different wavelengths and thereby significantly enhances the information bandwidth of the fiber.” *Id*. at 1:37–42. An optical add-drop multiplexer (OADM) is used both to remove wavelengths selectively from a multiplicity of wavelengths on an optical fiber (taking away one or more data channels from the traffic stream on the fiber), and to add wavelengths back onto the fiber (inserting new data channels in the same stream of traffic). *Id*. at 1:45–51.

The ’368 patent describes a “wavelength-separating-routing (WSR) apparatus that uses a diffraction grating to separate a multi-wavelength optical signal by wavelength into multiple spectral channels, which are then focused onto an array of corresponding channel micromirrors.” *Id*. at Abstract. “The channel micromirrors are individually controllable and continuously pivotable to reflect the spectral channels into selected output ports.” *Id*. According to Petitioner, the small, tilting mirrors are sometimes called Micro ElectroMechanical Systems or “MEMS.” Pet. 8.

The WSR described in the ’368 patent may be used to construct dynamically reconfigurable OADMs for WDM optical networking applications. Figure 1A of the ’368 patent is reproduced below.

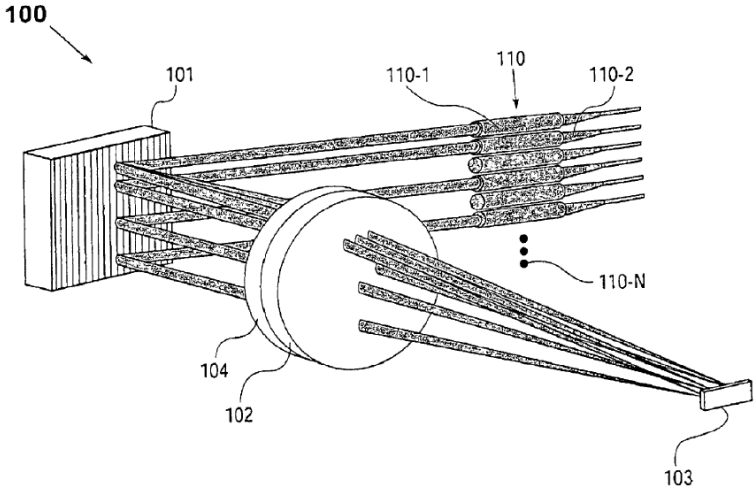

Fig. 1A

Figure 1A depicts wavelength-separating-routing (WSR) apparatus 100, in accordance with the ’368 patent. WSR apparatus 100 is comprised of an array of fiber collimators 110 (multiple input/output ports, including input port 110-1 and output ports 110-2 through 110-N), diffraction grating 101 (a wavelength separator), quarter wave plate 104, focusing lens 102 (a beam-focuser), and array of channel micromirrors 103. Ex. 1001, 6:57–63, 7:55–56.

A multi-wavelength optical signal emerges from input port 110-1 and is separated into multiple spectral channels by diffraction grating 101, which are then focused by focusing lens 102 into a spatial array of distinct spectral spots (not shown). *Id*. at 6:64–7:2. Channel micromirrors 103 are positioned such that each channel micromirror receives one of the spectral channels.

Figure 1B of the ’368 patent is reproduced below.

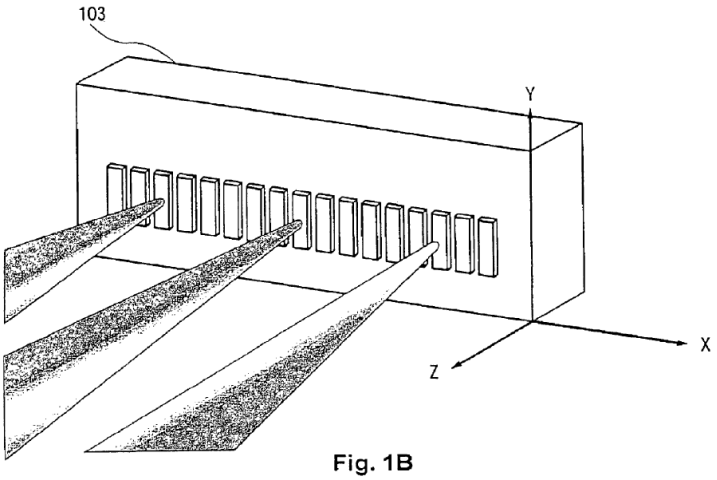

Fig. 1B

Figure 1B depicts a close-up view of the array of channel micromirrors 103 shown above in Figure 1A. *Id*. at 8:6–7. The channel micromirrors “are individually controllable and movable, e.g. pivotable (or rotatable) under analog (or continuous) control, such that, upon reflection, the spectral channels are directed” into selected output ports by way of focusing lens 102 and diffraction grating 101. *Id*. at 7:6–11. According to the ’368 patent:

> each micromirror may be pivoted about one or two axes. What is important is that the pivoting (or rotational) motion of each channel micromirror be individually controllable in an analog manner, whereby the pivoting angle can be continuously adjusted so as to enable the channel micromirror to scan a spectral channel across all possible output ports.

Id. at 9:8–14.

DOCKET ALARM

Explore Litigation Insights

Docket Alarm provides insights to develop a more informed litigation strategy and the peace of mind of knowing you're on top of things.

Real-Time Litigation Alerts

Keep your litigation team up-to-date with **real-time alerts** and advanced team management tools built for the enterprise, all while greatly reducing PACER spend.

Our comprehensive service means we can handle Federal, State, and Administrative courts across the country.

Advanced Docket Research

With over 230 million records, Docket Alarm's cloud-native docket research platform finds what other services can't. Coverage includes Federal, State, plus PTAB, TTAB, ITC and NLRB decisions, all in one place.

Identify arguments that have been successful in the past with full text, pinpoint searching. Link to case law cited within any court document via Fastcase.

Analytics At Your Fingertips

Learn what happened the last time a particular judge, opposing counsel or company faced cases similar to yours.

Advanced out-of-the-box PTAB and TTAB analytics are always at your fingertips.

API

Docket Alarm offers a powerful API (application programming interface) to developers that want to integrate case filings into their apps.

LAW FIRMS

Build custom dashboards for your attorneys and clients with live data direct from the court.

Automate many repetitive legal tasks like conflict checks, document management, and marketing.

FINANCIAL INSTITUTIONS

Litigation and bankruptcy checks for companies and debtors.

E-DISCOVERY AND LEGAL VENDORS

Sync your system to PACER to automate legal marketing.