01/12/98

Subclass	
Class	ISSUE CLASS

[redacted]

PATENT NUMBER

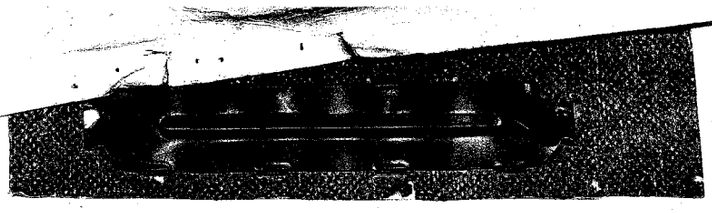

U.S. UTILITY PATENT APPLICATION

O.I.P.E.	PATENT DATE
RG SCANNED CK Q.A. NH	

SECTOR	CLASS	SUBCLASS	ART UNIT	EXAMINER
	358	468	2722	POKRZYWA ~~K. VU~~

FILED WITH: ☐ DISK (CRF) ☐ FICHE
(Attached in pocket on right inside flap)

[redacted]

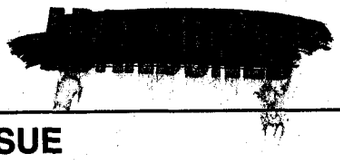

PREPARED AND APPROVED FOR ISSUE

ISSUING CLASSIFICATION

ORIGINAL		CROSS REFERENCE(S)						
CLASS	SUBCLASS	CLASS	SUBCLASS (ONE SUBCLASS PER BLOCK)					
INTERNATIONAL CLASSIFICATION								
/								
/								
/								
/								
/								

☐ Continued on Issue Slip Inside File Jacket

☐ TERMINAL DISCLAIMER	DRAWINGS			CLAIMS ALLOWED	
	Sheets Drwg.	Figs. Drwg.	Print Fig.	Total Claims	Print Claim for O.G.
☐ a) The term of this patent subsequent to _____ (date) has been disclaimed.	(Assistant Examiner)		(Date)	NOTICE OF ALLOWANCE MAILED	
☐ b) The term of this patent shall not extend beyond the expiration date of U.S Patent. No. _____	(Primary Examiner)		(Date)	ISSUE FEE: Amount Due	Date Paid
☐ c) The terminal ____months of this patent have been disclaimed.	(Legal Instruments Examiner)		(Date)	ISSUE BATCH NUMBER	

WARNING:
The information disclosed herein may be restricted. Unauthorized disclosure may be prohibited by the United States Code Title 35, Sections 122, 181 and 368. Possession outside the U.S. Patent & Trademark Office is restricted to authorized employees and contractors only.

Form PTO-436A
(Rev. 10/97)

(LABEL AREA)

(FACE)

JC560 U.S. PTO
09/006073
01/12/98

PATENT APPLICATION

09006073

INITIALS APR 029881

CONTENTS

		Date received (Incl. C. of M.) or Date Mailed			Date received (Incl. C. of M.) or Date Mailed
1.	Application 8 papers.		42.		
2.	LTRE ✓ EC	4/13/98	43.		
3.	Dec/Surcharge	07.06.94	44.		
4.	Ext of time	07.08.98	45.		
5.	Print Out	5-26-98	46.		
12-6 6.	Rej (3 mos)	12-7-99	47.		
7.	Ext (3)	6-7-00	48.		
8.	Amdt A	6-7-00	49.		
-28 9.	Final Rej (3 mos)	8-28-00	50.		
10.	Ext of time (3)	2-21-01	51.		
9 11.	ABANDONED	4-10-01	52.		
12.	PET .137 (b)	01-03-03	53.		
13.	Petition Granted	03/11/03	54.		
14.	Request for Access	11/6/09	55.		
15.	Request for Access	12-17-13	56.		
16.	Request for Access	1-15-14	57.		
17.	Request for Access	2-25-14	58.		
18.	Request for Access	2-28-14	59.		
19.	Request for Access	6/19/14	60.		
20.	Request for Access	10-15-14	61.		
21.			62.		
22.			63.		
23.			64.		
24.			65.		
25.			66.		
26.			67.		
27.			68.		
28.			69.		
29.			70.		
30.			71.		
31.			72.		
32.			73.		
33.			74.		
34.			75.		
35.			76.		
36.			77.		
37.			78.		
38.			79.		
39.			80.		
40.			81.		
41.			82.		

Kyocera Ex. 1012
p. 2

PATENT APPLICATION SERIAL NO. _____

U.S. DEPARTMENT OF COMMERCE
PATENT AND TRADEMARK OFFICE
FEE RECORD SHEET

02/13/1998 AGRAY1 00000042 09006073
01 FC:101 790.00 OP
02 FC:103 5412.00 OP
03 FC:102 656.00 OP

PTO-1556
(5/87)

SERIAL NUMBER	FILING DATE	CLASS	GROUP ART UNIT	ATTORNEY DOCKET NO.
09/006,073	01/12/98	358	2722	58959.12

APPLICANT

DAVID A. MONROE, SAN ANTONIO, TX.

CONTINUING DOMESTIC DATA********
VERIFIED NONE

JP

371 (NAT'L STAGE) DATA********
VERIFIED NONE

JP

FOREIGN APPLICATIONS********
VERIFIED NONE

JP

IF REQUIRED, FOREIGN FILING LICENSE GRANTED 04/06/98

Foreign Priority claimed 35 USC 119 (a-d) conditions met	STATE OR COUNTRY	SHEETS DRAWING	TOTAL CLAIMS	INDEPENDENT CLAIMS
☐yes ☒no ☐yes ☒no ☐Met after Allowance Verified and Acknowledged JP (Examiner's Initials) _____ (Initials)	TX	8	266	11

ADDRESS

BRACEWELL & PATTERSON
SOUTH TOWER PENNZOIL PLACE
711 LOUISANA STREET SUITE 2900
HOUSTON TX 77002-2781

TITLE

APPARATUS FOR CAPTURING, CONVERTING AND TRANSMITTING A VISUAL IMAGE SIGNAL VIA A DIGITAL TRANSMISSION SYSTEM

FILING FEE RECEIVED	FEES: Authority has been given in Paper No. _____ to charge/credit DEPOSIT ACCOUNT NO. _____ for the following:	☐ All Fees ☐ 1.16 Fees (Filing) ☐ 1.17 Fees (Processing Ext. of time) ☐ 1.18 Fees (Issue) ☐ Other _____ ☐ Credit
$6,988		

SERIAL NUMBER	FILING DATE	CLASS	GROUP ART UNIT	ATTORNEY DOCKET NO.
09/006,073	01/12/98	358	2722	58959.12

APPLICANT

DAVID A. MONROE, SAN ANTONIO, TX.

CONTINUING DOMESTIC DATA********
VERIFIED

371 (NAT'L STAGE) DATA********
VERIFIED

FOREIGN APPLICATIONS********
VERIFIED

FOREIGN FILING LICENSE GRANTED 04/06/98

Foreign Priority claimed / 35 USC 119 (a-d) conditions met	STATE OR COUNTRY	SHEETS DRAWING	TOTAL CLAIMS	INDEPENDENT CLAIMS
☐yes ☐no / ☐yes ☐no ☐Met after Allowance Verified and Acknowledged _____ Examiner's Initials _____ Initials	TX	8	266	11

ADDRESS

BRACEWELL & PATTERSON
SOUTH TOWER PENNZOIL PLACE
711 LOUISANA STREET SUITE 2900
HOUSTON TX 77002-2781

TITLE

APPARATUS FOR CAPTURING, CONVERTING AND TRANSMITTING A VISUAL IMAGE SIGNAL VIA A DIGITAL TRANSMISSION SYSTEM

FILING FEE RECEIVED	FEES: Authority has been given in Paper No. _____ to charge/credit DEPOSIT ACCOUNT NO. _____ for the following:	
$6,988		☐ All Fees ☐ 1.16 Fees (Filing) ☐ 1.17 Fees (Processing Ext. of time) ☐ 1.18 Fees (Issue) ☐ Other _____ ☐ Credit

A

01/12/98 jc541 U.S. PTO

PATENT APPLICATION TRANSMITTAL LETTER
ATTORNEY DOCKET NO.: 58959.012

TO THE COMMISSIONER OF PATENTS AND TRADEMARKS:

Transmitted herewith for filing is the patent application of David A. Monroe for **APPARATUS FOR CAPTURING, CONVERTING AND TRNASMITTING A VISUAL IMAGE SIGNAL VIA A DIGITAL TRNASMISSION SYSTEM.**

Enclosed are:

[X] Twenty-one (21) sheets of drawings.

[ ] a certified copy of a _____ application.

[ ] combined declaration and power of attorney.

[ ] verified statement to establish small entity status under 37 CFR 1.9 and 1.27.

[ ] Information Disclosure Statement with references.

[ ] Supplemental Transmittal Letter

CLAIMS AS FILED			**SMALL ENTITY**			**OTHER THAN A SMALL ENTITY**	
For	**No. Filed**	**No. Extra**	**Rate**	**Fee**	**OR**	**Rate**	**Fee**
Basic Fee				$395.00	OR		$790.00
Total Claims	266 - 20	246	x $22 =	$ .00	OR	x $ 22=	$5,412.00
Indep Claims	11 - 3	8	x $41 =	$ 0.00	OR	x $ 82=	$ 656.00
Multiple Dependent Claim Present			+ $135	$ 0.00	OR	+ $270 =	$
			Total	**$* .00**	**OR**	**Total**	**$6,858.00**

[ ] Please charge my Deposit Account No. 50-0259 in the amount of $.
A duplicate copy of this sheet is enclosed.

[x] A check in the amount of **$6,858.00** to cover the filing fee is enclosed.

[X] The Commissioner is hereby authorized to charge payment of the following fees associated with this communication or credit any overpayment to Deposit Account No. 50-0259. A duplicate copy of this sheet is enclosed.

[X] Any additional filing fees required under 37 CFR 1.16.
[X] Any patent application processing fees under 37 CFR 1.17.

[X] The Commissioner is hereby authorized to charge payment of the following fees during the pendency of this application or credit any overpayment to Deposit Account No. 50-0259. A duplicate copy of this sheet is enclosed.

[X] Any filing fees under 37 CFR 1.16 for presentation of extra claims.
[X] Any patent application processing fees under 37 CFR 1.17.
[ ] The issue fee set in 37 CFR 1.18 at or before mailing of the Notice of Allowance, pursuant to 37 CFR 1.311(b).

Date: 1/12/98

Mark A. Tidwell
Reg. No. 37,456

BRACEWELL & PATTERSON, L.L.P.
SOUTH TOWER PENNZOIL PLACE
711 LOUISIANA STREET, SUITE 2900
HOUSTON, TEXAS 77002-2781
(713) 221-1529
Attorney Docket No. 58959.012

CERTIFICATE OF EXPRESS MAIL

I hereby certify that this correspondence is being deposited with the United States Postal Service as EXPRESS MAIL - POST OFFICE TO ADDRESSEE, in an envelope addressed to: Commissioner of Patents and Trademarks, Washington, D.C. 20231 on 1/12/98. The Express Label No. is EM018601734US.

Judy Krager
SIGNATURE

IP\DMA012\PATAPPTRN

Kyocera Ex. 1012
p. 7

JC560 U.S. PTO
09/006073
01/12/98

PATENT APPLICATION TRANSMITTAL LETTER
ATTORNEY DOCKET NO.: 58959.012

TO THE COMMISSIONER OF PATENTS AND TRADEMARKS:

Transmitted herewith for filing is the patent application of David A. Monroe for **APPARATUS FOR CAPTURING, CONVERTING AND TRNASMITTING A VISUAL IMAGE SIGNAL VIA A DIGITAL TRNASMISSION SYSTEM.**

Enclosed are:

[X] Twenty-one (21) sheets of drawings.

[ ] a certified copy of a _____ application.

[ ] combined declaration and power of attorney.

[ ] verified statement to establish small entity status under 37 CFR 1.9 and 1.27.

[ ] Information Disclosure Statement with references.

[ ] Supplemental Transmittal Letter

CLAIMS AS FILED			SMALL ENTITY			OTHER THAN A SMALL ENTITY	
For	No. Filed	No. Extra	Rate	Fee	OR	Rate	Fee
Basic Fee				$395.00	OR		$790.00
Total Claims	266 - 20	246	x $22 =	$ .00	OR	x $ 22=	$5,412.00
Indep Claims	11 - 3	8	x $41 =	$ 0.00	OR	x $ 82=	$ 656.00
Multiple Dependent Claim Present			+ $135	$ 0.00	OR	+ $270 =	$
			Total	**$* .00**	**OR**	**Total**	**$6,858.00**

[ ] Please charge my Deposit Account No. 50-0259 in the amount of $.
A duplicate copy of this sheet is enclosed.

[x] A check in the amount of **$6,858.00** to cover the filing fee is enclosed.

[X] The Commissioner is hereby authorized to charge payment of the following fees associated with this communication or credit any overpayment to Deposit Account No. 50-0259. A duplicate copy of this sheet is enclosed.

[X] Any additional filing fees required under 37 CFR 1.16.
[X] Any patent application processing fees under 37 CFR 1.17.

[X] The Commissioner is hereby authorized to charge payment of the following fees during the pendency of this application or credit any overpayment to Deposit Account No. 50-0259. A duplicate copy of this sheet is enclosed.

[X] Any filing fees under 37 CFR 1.16 for presentation of extra claims.
[X] Any patent application processing fees under 37 CFR 1.17.
[ ] The issue fee set in 37 CFR 1.18 at or before mailing of the Notice of Allowance, pursuant to 37 CFR 1.311(b).

Date: 1/12/98

Mark A. Tidwell
Reg. No. 37,456

BRACEWELL & PATTERSON, L.L.P.
SOUTH TOWER PENNZOIL PLACE
711 LOUISIANA STREET, SUITE 2900
HOUSTON, TEXAS 77002-2781
(713) 221-1529
Attorney Docket No. 58959.012

CERTIFICATE OF EXPRESS MAIL

I hereby certify that this correspondence is being deposited with the United States Postal Service as EXPRESS MAIL - POST OFFICE TO ADDRESSEE, in an envelope addressed to: Commissioner of Patents and Trademarks, Washington, D.C. 20231 on 1/12/98. The Express Label No. is EM018601734US.

SIGNATURE

IP\DMA012\PATAPPTRN

GJ\058959\007011
STON\797832.1
)8--4:09 pm

United States Patent & Trademark Office

Office of Initial Patent Examination – Scanning Division

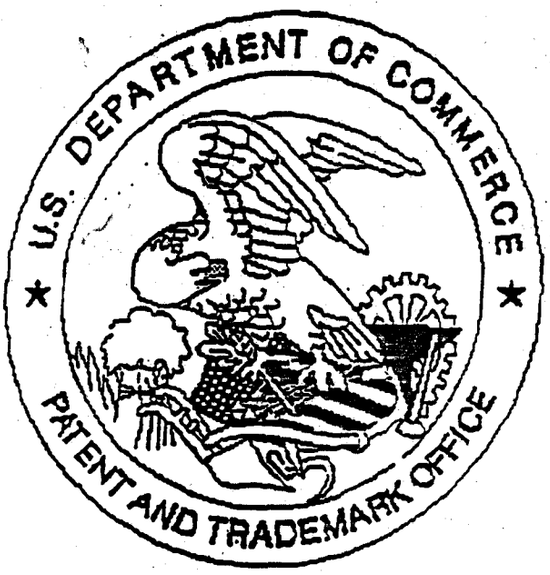

Application deficiencies found during scanning:

1. Application papers are not suitable for scanning and are not in compliance with 37 CFR 1.52 because:
   - ☐ All sheets must be the same size and either A4 (21 cm x 29.7 cm) or 8-1/2"x 11". Pages _____ do not meet these requirements.
   - ☐ Papers are not flexible, strong, smooth, non-shiny, durable, and white.
   - ☐ Papers are not typewritten or mechanically printed in permanent ink on one side.
   - ☐ Papers contain improper margins. Each sheet must have a left margin of at least 2.5 cm (1") and top, bottom and right margins of at least 2.0 cm (3/4").
   - ☐ Papers contain hand lettering.

2. Drawings are not in compliance and were not scanned because:
   - ☐ The drawings or copy of drawings are not suitable for electronic reproduction.
   - ☐ All drawings sheets are not the same size. Pages must be either A4 (21 cm x 29.7 cm) or 8-1/2" x 11".
   - ☐ Each sheet must include a top and left margin of at least 2.5 cm (1"), a right margin of at least 1.5 cm (9/16") and a bottom margin of at least 1.0 cm (3/8").

3. Page(s)_____ are not of sufficient clarity, contrast and quality for electronic reproduction.

4. Page(s)_____ are missing.

5. OTHER: No Declaration

APPARATUS FOR CAPTURING, CONVERTING AND TRANSMITTING A VISUAL IMAGE SIGNAL VIA A DIGITAL TRANSMISSION SYSTEM

Inventor: David A. Monroe

APPARATUS FOR CAPTURING, CONVERTING AND TRANSMITTING A VISUAL IMAGE SIGNAL VIA A DIGITAL TRANSMISSION SYSTEM

BACKGROUND OF THE INVENTION

FIELD OF THE INVENTION

The invention is generally related to image capture and transmission systems and is specifically directed to an image capture, compression and transmission system for use in connection with land line and wireless telephone systems.

DISCUSSION OF THE PRIOR ART

Industry has developed and continues to develop and enhance techniques for scanning, compressing, transmitting, receiving, decompressing, viewing and printing documents. This technology, encompassing the full body of facsimile transmission and reception, is currently in widespread use. The current standards, CCITT Group III and Group IV, define methods to scan and transmit high quality, bi-level images with a high degree of success and has become commercially acceptable throughout the world. However, gray scale documents are not easily transmitted because the scanners and algorithms are not tailored to the function. Three dimensional objects will not fit into the flat document scanners and cannot be transmitted.

Examples of systems that have addressed some of these issues are shown in U.S. Patent No. 5,193,012 which shows a video to facsimile signal converter, and U.S. Patent No. 3,251,937 which discloses a system for transmitting still television pictures over a telephone line.

Wire photography, and its extension , radio photography, have long been used by the news media. The most common form involves an input device that converts photographs into encoded signals for communication over telecommunications facilities or radio. At the receiving end, reproducing equipment reconverts the encoded image signals by exposing photographic film or other sensitized paper. The term facsimile is often use with these products.

Kyocera Ex. 1012
p. 12

Still video equipment has recently become available from vendors such as Kodak, Canon and Sony, and is again primarily used by the television and print media, although applications are expanding rapidly in such areas as insurance investigations and real estate transactions. A still video camera captures a full color still video image that can be reproduced using a special video printer that converts the still video image data into hard copy form. For applications requiring communication of the still video image, transmit/receive units are available wherein the image begins and ends as a video image.

The Photophone from Image Data Corporation is an example of a specialty product that combines a video camera, display and storage facility in a terminal package. One terminal can send a real time or stored still video image to another for display or storage, or printing on special video printers. Again, the signal begins and ends as a video image.

Another example of a specialty product is peripheral equipment available for personal computers that enables the input/output, storage and processing of still video images in digitized formats. For instance, the Canon PV-540 is a floppy disk drive that uses conventional still video disks, digitizing and a still video image using a conventional format, and communicates with the computer through a standard communications I/O port.

U.S. Patent No. 5,193,012 discloses a still-video to facsimile conversion system for converting the still-video image frame into a half-tone facsimile reproduction without having to store an entire intermediated gray scale image frame by repeatedly transmitting the still-video image frame from a still-video source to an input circuit with a virtual facsimile page synchronization module . This system permits image to facsimile conversion by utilizing a half tone conversion technique.

While the various prior art systems and techniques provide limited solutions to the problem of transmitting visual images via a facsimile transmission system, all fall short of providing a reliable and convenient method and apparatus for readily capturing, storing, transmitting and printing visual images in a practical manner.

SUMMARY OF THE INVENTION

The subject invention is an image capture, compression and transmission system that is specifically designed to permit reliable visual image transmission over land line or wireless communications using commercially available facsimile transmission techniques. The invention incorporates a camera and signal converter into an integrated unit wherein the converted signal may be transmitted on a real time basis or may be stored in memory for later recall and transmission. The design of the invention permits maximum flexibility, with the camera/converter/telephone or other transmission device being designed in a modular configuration wherein any or all of the devices may exist as integrated or independent units.

The preferred embodiment permits capture of a video image using a digital camera, an analog camera, or a video camera such as a camcorder. The captured video image is then converted into still frame digitized format for transmission over any of a variety of transmission systems ranging from Group-III facsimile to computer, or to a like device at a remote location, in any protocol desired. The invention recognizes that once the signal is digitized, the transmission protocols are virtually endless.

For example, the present invention, permits a still frame visual image to be captured at a remote location and sent immediately, over wireless communication systems, to a remote location such as, by way of example, a computer system wherein the image could be merged directly into newsprint. The image may also be sent to and printed as a hard copy using any Group-III facsimile machine, anywhere in the world. Where desired, the images may be stored in memory for later recall, and may be archived on a portable medium such as a memory card or the like.

The system of the subject invention is particularly useful for applications where immediate transmission of visual images of scenes, people and objects is desirable and sophisticated equipment is not always available for receiving the information. The system also provides a unique and reliable means for transmitting visual data to and from remote locations, such as, by way of example, law enforcement and emergency vehicles and the like.

In the preferred embodiment of the invention, the system includes a video

Kyocera Ex. 1012
p. 14

camera and an integral cellular telephone, wherein the telephone using the standard audio mode or future digital modes, can be used to transmit and receive visual image signals. A desk model is also disclosed and permits connection to a standard land line telephonic system. A mobile console model is disclosed for use in law enforcement vehicles, and the like. Other communication systems are also supported by the subject invention, including hardwired networks, radio and satellite transmission and the like.

A local facsimile machine may be incorporated with the unit and can serve as a printer for providing hard copy of the captured image at the point of capture, as well as being adapted for receiving facsimile transmissions in the standard fashion.

The circuitry is disclosed for supporting any of the preferred configurations from a basic real time transmission system via Group-III fax to a comprehensive system supporting both land line and wireless transmission of image, audio and documentary data at both a local and remote station.

The subject invention also permits digitized collection of audio signals through the use of an internal microphone, and external input device, a cellular telephone, land line telephone, wireless radio or other communication system, and digitized audio playback, as well. The playback can be via an internal speaker, out an external out jack to a remote device or via a cellular telephone, land line telephone, wireless radio or other communication system.

The digitized image and audio capture features permit association of audio with an image, as well as data with the image. Useful data associated with the image includes GPS from either internal or external GPS devices, range information from ranging devices, date and time, and text which may be input from an integrated keyboard or from a remote device.

It is an important feature of the invention that the system supports storage of images in an interim storage format including raw video, compressed video, interim gray scale format and/or half tone format. The image can also be stored in the selected output mode, such as by way of example, a Group III facsimile mode. The versatile capability of the system permits transmission of captured data to a standard bi-level facsimile machine such as Group III, to gray scale facsimile systems or full color

Kyocera Ex. 1012
p. 15

facsimile systems, as well as to other remote receiving devices such as, by way of example, personal computers and network servers. The data may be transferred in any of a variety of formats and protocols including JPEG, FAX, wavelets, emerging imagery formats, FAX and computer data protocols. The invention is adapted to operate in multiple modes, with a unitary capture and send mode or separate capture and store, and send modes.

In the preferred embodiment, the system is adapted for tagging a collected image, video, audio, and other data such as a GPS information, with geospatial information and real time clock and added text. This permits the complete historical data to be transmitted simultaneously with the image signal.

It is contemplated that the system of the invention would be self-contained with an integral power unit such as a disposable battery, rechargeable battery source or the like. Therefore, the system is adapted to power up when in use and power down or "sleep" when not activated, preserving power during idle time. The power systems for the video camera, the video input circuits and converters, the modem or other transmission devices and other high drain components may be isolated and only powered when needed. This also permits use of ancillary functions, such as use as a cellular telephone, to proceed without draining the power source by powering idle components. The processor clock rate may also be slowed down during idle mode to further conserve power.

Where desired, the system also includes camera operation control capability through the use of a digital/analog circuits for converting digital commands to analog signals for controlling the gain, pedestal, setup, white clip, lens focus, white balance, lens iris, lens zoom and other functions of the camera from a local input device, a remote device or as automatic or programmed functions. The central processor may also be used to control camera shutter rate. Other camera features and parameters which may be controlled in this manner are compressor resolution (such as high, medium, low user settings) corresponding to compression rate parameters, field/frame mode, color or monochrome, image spatial resolution (640x420 pixels, 320x240 pixels, for example), lens and camera adjustments, input selection where multiple cameras or

Kyocera Ex. 1012
p. 16

video sources are used and the like.

When an integrated communications device is used, such as by way of example, a cellular telephone, the telephone can be isolated from the rest of the system to permit independent use, and independent power up and power off and other cellular phone functions.

In operation, the system permits not only the manual capture, dial (select) and send of images, but may also be fully automated to capture, dial and send, for example, on a timed sequence or in response to a sensor such as a motion sensor, video motion detection, or from a remote trigger device. The remote trigger also may be activated by an incoming telephone signal, for example.

The remote device may also be use for remote loading and downloading of firmware, and for setting of the programmable parameters such as to provide remote configuration of sampling modes during capture, compression rates, triggering methods and the like.

The triggering function permits a multitude of sampling schemes for a simple triggered activation for capturing an image upon initiation to a trigger signal to more complicated schemes for capturing and transmitting images prior to and after receipt of the trigger signal. The trigger function can be set to operate, for example, on a time per sample and number of sample basis, or time per sample and total sample time basis, or number of samples and total time basis. Depending on application, the trigger can sample in a prior to and after signal mode, using in combination the time per sample and number of samples prior and after signal basis, a total time basis, a percent prior versus percent after trigger basis, time per sample basis, time prior to and time after trigger basis, and other combination. For example, if the image capture device is positioned to monitor traffic accidents at a specific location, and an audio signal sensor identifying a crash were used as the trigger, it would be desirable to collect image sample both prior to and after the trigger signal. The number of samples, total sample time, and percentage of samples prior to and after trigger would be controlled by the specific application.

Circular sampling techniques are supported by the data capture system of the

present invention. This is particularly useful when triggering events are used to initiate transmission of collected image data over the communications system. For example, if a triggering event is motion detected at a motion sensor, it may be useful to look at the images captured for a period of time both prior to and after the actual event. The circuitry of the subject invention permits any circular sampling technique to be utilized depending upon application, such as prior to an after trigger, only after trigger or only before trigger or prior to and after the trigger point. Again, as an example, it may desirable to look primarily at images captured before a triggering event if the event is a catastrophic event such as an explosion or the like. Other circular sampling techniques may be employed, as well, incorporating multiple cameras, for example, wherein different fields are sampled depending upon the time frame in a sequence of events.

It is, therefore, an object and feature of the invention to provide an apparatus for capturing, converting and transmitting a visual image via standard facsimile transmissions systems.

It is another object and feature of the invention to provide an apparatus for compressing the visual image data in order to minimize the capacity requirements of the data capture and storage system.

It is an additional object and feature of the invention to provide an apparatus for capturing and storing a visual image for later recall and review and/or transmission.

It is yet another object and feature of the invention to provide an apparatus for storing a captured video image in digital format on a portable storage medium.

It is an additional object and feature of the invention to provide an apparatus capable of sending and receiving telephonic audio messages, facsimile documents and captured visual images to and from standard, readily available remote stations.

It is a further object and feature of the invention to provide the means and method for capturing images prior to, prior to and after, or after a triggering event.

It is also an object and feature of the invention to provide for multiple triggering events and/or optional viewing or review of the captured images prior to printing or transmission.

It is another object and feature of the invention to provide an apparatus which may be activated from a remote location for initiating the capture of images by the device.

Other objects and features will be readily apparent from the drawings and detailed description.

BRIEF DESCRIPTION OF THE DRAWINGS

Fig. 1 is a block diagram of a basic facsimile camera configuration for capturing an image via a camera and transmitting it via Group-III facsimile transmission to a standard hard copy medium.

Fig. 2 is similar to Fig. 1, but incorporates a memory storage capability, permitting storage and optional review or viewing of the image prior to transmission.

Fig. 3 is similar to Figs. 1 and 2, but incorporates a data compression scheme for increasing the capacity of the memory and for increasing efficiency of transmission.

Fig. 4 includes the capture and transmission configuration of Fig. 2, with multiple transmission format capability including Group-III facsimile, personal computer, modem, parallel and serial transmission schemes.

Fig. 5 is an exemplary schematic diagram supporting the configurations shown in each of Figs. 1-4.

Figs. 6A, 6B, and 6C, are block diagrams of the physical components of desktop, portable and comprehensive console embodiments of the invention, respectively.

Fig. 7A and 7B are perspective drawings of a hand held device for capturing, storing and transmitting an image in accordance with the invention (new drawings to replace Frassinito design.

Figs. 8A-8L (Formerly Fig. 12) comprises a schematic diagram for an exemplary embodiment of the circuit for supporting the subject invention.

Fig. 9 is a diagram of the various triggering sequence options.

Kyocera Ex. 1012
p. 19

DETAILED DESCRIPTION OF THE PREFERRED EMBODIMENTS

The image capture and transmission system of the subject invention is suited for capturing one or more single frame analog image or a digital image data signal and transmitting the captured signal via any of a plurality of transmission schemes to a remote receiving station where the image is downloaded in a suitable format for viewing and printing on hard paper copy, a CRT screen image, or other medium. The system is particularly well suited for sending and/or receiving images via a standard Group III facsimile transmission system and permits capture of the image at a remote location using an analog or digital camera. Two generic configurations are shown and described, the first, where each image is transmitted as it is captured, and the second, which permits capture, storage, and selective recall of captured images for transmission. The invention also contemplates a portable storage medium, wherein the captured stored medium may be removed from the capture device and archived for later use. While a system for black and white (gray tones) for Group-III facsimile transmission is described in detail herein, the invention could be readily adapted to transmission of color images utilizing the teachings of the present invention using industry standard color video standards and circuits. Both portable, or hand held, and stationary, or desktop, units are described. The circuitry utilized for both is configurations is identical , but stationary configurations do not need a battery.

Figs. 1-5 are circuit configuration diagrams for the various capture, storage and transmission schemes. The physical embodiments utilized to employ the teachings of the schemes taught in Figs. 1-5 are not limited. Figs. 6-10 are exemplary physical embodiments of the subject invention.

Turning now to Fig. 1, the simplest embodiment of the invention incorporates a standard analog or digital camera device 10 for capturing a visual image in the typical fashion. The camera 10 may be operator activated as indicated at 12, or may be programmed to be activated at selected intervals or in response to certain conditions. For example, a motion detector may be utilized to activate the camera 10 in a surveillance installation. Once activated, the camera 10 captures a visual image in typical fashion through a lens (see lens 192, for example, in Fig. 7A). In the illustrated

Kyocera Ex. 1012
p. 20

embodiment, the captured image is then transmitted to a gray scale bit map memory device 16, from which it is output to a half-tone conversion scheme 18 to be input into a binary bit map 20 for formatting the captured image in a configuration suitable for transmission via a Group-III facsimile system. The signal generated at 22 by the binary bit map 20 is input into a Group-III encoding and compression network 24 for generating an output signal at 26 which is introduced into a Group-III protocol transmission device 28. The output at 30 of the transmission device 28 is then transmitted into any standard transmission interface such as, by way of example, hard line telephonic transmission, cellular transmission, radio signal, satellite transmission or other transmission system 32 via a modem or similar device, as needed(as diagrammatically illustrated at 29), to be received via a compatible interface by a remote Group-III receiving system 34. The Group-III receiving system 34 is a typical Group-III facsimile system comprising a Group-III receiver 36, decoder and decompressor 38 and binary bit map 40, from which a facsimile hard copy such as plain paper copy 42 may be generated.

This configuration is particularly well suited where real near time transmission is desired, for example when the system is operator controlled and a "real time" image is desired at a remote location. An example of such a system may be a photo-identification confirmation of an apprehended suspect in law enforcement use, or transmission of images of damaged assets for insurance purposes, or transmission of images of construction job site conditions. This configuration is also well suited for use in those applications where a sensor activates the system and real time transmission of the sensed condition is desired. An example of such a system would be a motion activated camera in a surveillance location, where the image is immediately transmitted to a remote monitoring station. Of course, it will be readily understood by those who are skilled in the art that tagging a transmitted image with information such as, by way of example, date, time and location, can be incorporated in the transmitted signal so that a receiving station could monitor a plurality of remote image data capture systems. This is also useful for reviewing a body of previously stored or printed images to determine the time and location of such image.

Kyocera Ex. 1012
p. 21

The embodiment of Fig. 2 is similar to Fig. 1, but incorporates a memory and optional operator viewer system. The image is captured by the camera 10 and conditioned by the gray scale bit map 16, as in Fig. 1. In this embodiment, the output 44 of the bit map 16 is input into a standard digital memory device 46 for later recall. This configuration is particularly well suited for applications where near real time transmission of the image either is not required or is not desirable. It will be noted that with the exception of the insertion of the memory device 46 and the optional viewer device 48, the capture and transmission system of Fig. 2 is identical to that shown and described in Fig. 1. Once the image is captured by the camera 10 and is presented at 44 to the memory device 46, it is stored for later recall and transmission. The specific type of memory device is optional and may include, for example, an SRAM device, a DRAM, Flash RAM, hard drive, floppy disk, PCMCIA format removable memory (see, for example, the PCMCIA card 72 in Fig. 7A), writeable optical media or other storage device. The memory may selectively capture images, as indicated by the operator interface/capture interface 52, or may be programmed to selectively capture periodic images or all images. In the embodiment shown in Fig. 2, an optional viewer device 48 is provided. This permits the operator to recall and view all or selective images before transmission, as indicated by the operator interface/recall interface 54. This permits the operator to review all images retained in the memory 46 and transmit selective images, as desired, to the Group-III transmission system. The remainder of the system of Fig. 2 operates in the same manner as the configuration shown and described in Fig. 1.

The configuration of Fig. 3 incorporates all of the features of Figs. 1 and 2, and additionally, includes an interim data compression and decompression scheme to permit increased utilization of the memory or storage medium 46. As shown in Fig. 3, an interim format compressor 56 is inserted between the gray scale bit map 16 and the memory device 46. This permits compression and reduction of the data required to store the image, effectively increasing the capacity of the storage device. It is an objective of the storage device to preserve the gray scale quality of the image for viewing at the location of capture. An interim format decompression device 58 is

inserted between the output of the memory device 46 and the rest of the system, whether the optional viewer 48 is utilized, or the output is entered directly into the half-tone convertor 18. The interim compression/decompression scheme is particularly useful when all of the image data is to be permanently archived, or when limited capacity portable media are used, such as, by way of example, floppy disks or a portable PCMCIA card. It will be noted that the remainder of the system shown in Fig. 3 is identical to the system shown and described in Fig. 2.

Fig. 4 illustrates the use of the image capture and/or retention configured in any of the optional embodiments of Figs. 1-3 and adapted for use in combination with any of a variety of transmitting and receiving schemes such as, by way of example, the Group-III system shown in Figs. 1-3, a modem, direct connection to a personal computer, serial or parallel transmission, or any selected transmitting/receiving protocol. This illustration demonstrates the versatility of the system once the image has been captured, converted and conditioned by the image capture device of the subject invention. Specifically, once the image is captured by the camera 10 and conditioned by the gray scale bit map 16, it may be stored and transmitted, or transmitted "real time" via any transmitting and receiving scheme. As shown in Fig. 4 the image capture device includes the memory device 46 and the optional viewer 48 for incorporating maximum capability. However, any of the schemes of Figs. 1-3 would be suitable for producing a transmittable signal. In the embodiment shown, a format select interface switch 60 is positioned to receive the fully conditioned signal on line 59. This would permit either automated or manual selection of the transmitting protocol, including the Group-III facsimile system previously described in connection with Figs. 1-3, as indicated by selecting format select switch 60 position A; or PC modem protocol as illustrated by the JPEG compressor 62 and protocol generator 64, as indicated by selecting format select switch position B; or the wavelet compressor and PC modem protocol, as illustrated by the wavelet compressor 66 and PC modem protocol generator 68 by selecting switch position C; or any selected conversion network 65, (if needed) with a compatible compressor 67 (if needed) and compatible protocol generator 75 (if needed), as indicated by switch position D; or a serial protocol scheme 77, with serial

drivers 79 directly to a hardwired personal computer 81 by selecting switch position E. Of course, it will be readily understood by those skilled in the art that one or a plurality of transmitting protocols may be simultaneously selected. Depending on the protocol selected, the signal output is generated at the selected output module and introduced to a communications interface module 83 via a modem or other device, as needed, for transmission via a transmission system to a compatible receiving station such as the Group-III facsimile device 34, the personal computer 85, the video telephone 89, and/or other server or receiving device 91 for distribution.

An exemplary circuit supporting the configurations of Figs. 1-4 is shown in Fig. 5. With specific reference to Fig. 5, an analog camera is indicated by the "video in" signal at 70. Typically, the video signal is a composite video/sync signal. The diagram shows all of the signal processing necessary to sync up to an NTSC signal 70 coming out of the analog camera and processed for introduction into an integral RAM memory 71 and/or a portable RAM memory via interface 73. An analog to digital (A/D) converter 74 converts the video portion of the analog signal from the camera and produces the digital signal for output at line 76. The digital output data on path 76 is introduced into a data multiplexer circuit 81 and into the RAM memory unit(s) 71, 72. In the exemplary embodiment, the portable RAM memory 72 is an image card such as, by way of example, a PCMCIA SRAM card or a PCMCIA Flash RAM card. However, it will be readily understood that any suitable RAM memory configuration can be used within the teachings of the invention. It is desirable to store compressed rather than raw data in card 72 because of space and transmission speed factors.

As the signal at 70 is introduced into the circuit, the sync detector 78 strips the sync signal portion off of the video signal. The sync signal drives the video address generator 80 for providing a signal used to generate an address signal at the address multiplexer circuit 82 for synchronizing the scanned in video signal with the locations in RAM to define each frame to be captured. The read/write control 84 controls the coordination of the sync signal 83 with the video signal to define a full frame. Basically, when the camera is activated either by the operator or by automation, the system processor 86 detects the initiation of the camera and capture sequence and sends

Kyocera Ex. 1012
p. 24

a signal via line 88 to the read/write control 84. The read/write control then monitors the incoming video signal 83 to find the horizontal and vertical sync pulse to identify the beginning of a frame. The read/write control then initiates writing to memory at the RAM devices to initiate capture of the frame. The read/write control continues to "write" to memory until the appropriate sync signal is received, indicating the end of the frame. At this point a single frame is captured in RAM 71 and/or on the portable medium RAM 72.

This frame may now be output from the system via any of the available transmitting schemes. In the exemplary embodiment, the processor 86 may be any processor or such as a microprocessoror DSP, with sufficient capability to perform the described functions. The processor bus is indicated at 87. The circuitry supporting the processor comprises the processor chip 86 and the control store memory (ROM, Flash RAM, PROM, EPROM or the like) 92 for storing the software program executed by the processor. It will be understood that other memory devices could be utilized without departing from the spirit of the invention. For example, a Flash RAM would permit flexibility and replacement of the program for upgrades and enhancements. The user interface commands are generated and interpreted by the software that is being executed by the processor 86.

The display unit 94 is connected through a typical interface 96, and provides visual user interface at the camera body to give the operator a visual read-out of the status of the collection and transmission of a selected frame. In the exemplary embodiment, the display unit is a two line, multi-character LCD display, but other sizes or technology displays could be readily incorporated, depending, for example, on the amount of graphics desired in the display module. The bank of operator buttons and/or switches 98 are connected to the system through the button interface 100.

The general purpose control register 102 serves as a latch and permits control bits to be introduced from the processor 86 to the transmitting systems or to transfer status bits from the transmitting systems back to the processor in the well known manner. The modem 104 may be any of a variety of widely available modems or modem chip sets currently in commercial use. The modem should support CCITT

Group III fax format for transmission to Group III fax machines. Once the signal is introduced into the modem 104, it is handled in typical fashion to provide input/output transmissions: (1) from the subject device to a hardwired telephonic line as indicated at 114, (2) from the subject device to the external facsimile machine as indicated at 116, or (3) from the subject device to an external wireless device telephone as indicated at 130. The specific selection is controlled by the user at button module 98 in conjunction with the processor 86.

An isolation transformer 110 is provided to isolate the circuitry connected to external communications circuit from the circuitry of the subject device. The relays at 108 and 112 permit patching directly into the hardwired telephonic line and to the telephone company system as indicated at 114, to an external handset or fax machine at 116, or to the modem 104, whereby facsimile data can be sent and received via the modem. These relays could be mechanical or solid state. The relay 118 is connected to a tone source 120 for providing an audible tone signaling to the user that the system is being used for transmitting or receiving a captured image.

With specific reference to the circuitry associated with relay 112, it will be noted that when the handset is switched away from the phone line to the tone source, the modem transformer 110 is switched to the telephone line 114. This blocks normal audio telephone service and permits the transmission of an image signal from the RAM devices 71 or 72, through the modem 104, and to the telephone line 114.

In the exemplary embodiment, a stand alone facsimile machine can be connected through the external handset jack at 116. With relay 112 set to activate telephone service and the tone generator 120 disconnected, the relay 108 can be set in either of two positions. The first position, as drawn, connects the facsimile machine at jack 116 to the telephone line, permitting standard facsimile transmission. The second or alternative position permits the modem 104 to transmit the image data signal directly to the facsimile machine at jack 116, for providing an archive copy or the like. In this configuration, the facsimile machine will operate as a local printer for printing the captured images. Signal source 120 may be used as a ringing voltage generator for signaling such facsimile machine prior to connection.

The system of the present invention also contemplates wireless transmission over a cellular telephone, radio frequency, satellite transmission or the like. In the exemplary embodiment, the specific configuration for a cellular telephone interface is shown in detail. The amplifiers 122, 124 amplify the input of the modem 104 and are controlled by the FETs 126, 128, respectively. The FETs are controlled by the control register 102 and allow selection of the audio either coming in from the cellular interface 130 or from the telephone line 104 to the modem. This permits the cellular phone to be used for three distinct functions: (1) as an audio telephone, (2) as a transmitting system for transmitting the captured image and related signals via a cellular system, and (3) for receiving incoming transmissions to the processor such as remote control, remote configuration, or images.

In the exemplary embodiment, the image card 72 is a DRAM card or non-volatile storage card such as a Flash RAM or the like and provides a removable medium for storing the image data as either raw or compressed data. The card can also be used to store compressed data sent into the system via external facsimile transmission. As illustrated, the system is capable of both sending and receiving image data via Group-III fax or other protocol. By incorporating the digital to analog (D/A) converter into the system and pulling the signal from the RAM 71 (or portable RAM 72), the signal can be displayed right at the camera viewfinder 134 or other display device connected at port 138. A sync generator 136 is incorporated to provide synchronization of incoming data in the same manner. The sync detector 78 is utilized to define a frame-by-frame correlation of the data generated by the camera at the video input 70 for storage to memory 71 or 72.

Any standard power source may be utilized, including replaceable or rechargeable batteries 141, or an AC adapter 142. The AC adapter is particularly suitable for desktop applications.

The exemplary embodiment includes a speaker or other audio transducer 144 for emitting a detectable signal whenever the user interface merits its use, such as user induced errors, system errors, user attention getting and the like.

In order to send a facsimile transmission over a typical Group-III Facsimile

system, the multiplexer 82 is switched to the processor 86 such that the RAM address is generated by the processor 82 instead of the video address generator signal. In the facsimile transmitting mode, the processor accesses the RAM and manipulates the data representing each frame image. For example, the processor will perform the gray scale to half tone conversions described in connection with Figs. 1-4 to prepare the signal for facsimile transmission. The processor can also perform image compression and output the image as a gray scale. In the facsimile transmission mode, once the half tone conversion is completed, the processor executes a code for performing a bi-level compression of the data and the signal representing the frame data is output over line 90, through the multiplexer 81 and over the processor bus 87 to the processor 86, then to modem 104 for transmission. Other memory and processor configurations could be used without departing from the scope and spirit of the invention, as will be recognized by those skilled in the art.

Various physical configurations of the invention are shown in Figs.7A & 7B. Figs. 6A, 6B and 6C are block diagrams for desktop and portable units. Figs. 7A and 7B iillustrate the subject invention as incorporated in a standard 35 millimeter type camera housing.

A basic desktop system is shown in Fig. 6A, and includes a console unit having a telephone jack 152, an external telephone connection 154 and a video input/camera power jack 156 for connecting the analog camera 10. A facsimile machine may be also connected at jack 154 to provide local printer capability. The configuration shown in Fig. 6B is a basic portable system, with a battery powered portable module 160 having a self-contained power source 162. The system may include an integral RAM and/or the removable memory module as indicated by the image card 72. The camera 10 may be an integral feature of the portable module 160, or may be a detached unit, as desired. In this embodiment, a cellular telephone 164 is provided with a data jack 166 for connecting to the output jack 168 of the module, whereby the image data signal may be transmitted via the cellular telephone to a remote facsimile machine over standard cellular and telephone company facilities. When incorporating the circuitry of Fig. 5, the cellular phone may be used as both an input and an output device, and incoming

data or stored images may be viewed through the viewfinder 170.

Fig. 6C shows a comprehensive desk or stationary configuration incorporating all of the features supported by the circuitry of Fig. 5. As there shown, the control module 172 is adapted for receiving the image card 72 and is powered by an AC power adapter as indicated at 142. The camera 10 is connected to the module via a hardwired connection at jack 174. A monitor 176 is provided for viewing data images. A video cassette recorder 178 is provided and may be used as an auxiliary input device for the images transmitted from the system. The facsimile machine 180 can be used as a local printer, or can be used to send facsimiles transmissions in the well-known manner. Direct connections to the telephone line system are provided at jack 182. The FAX/phone jack 186 can be connected to a facsimile machine 180 and/or a standard telephone 184, where the public telephone system can be accessed. A data jack 188 is used to connect to a cellular telephone or the cellular modem, or other wireless device for transmission or reception of image data.

Turning now to Figs. 7A and 7B, the camera body 190 is similar to a standard 35 millimeter camera housing and is adapted to receive a standard lens 192 with a viewfinder 194. The electronics are housed in the casing in the area normally occupied by the film and film advancing implements. The operator interface button keys 98 are housed within the housing and may be positioned on the back plate 196 of the body. ~~Fig. 8~~. The LCD unit may be positioned to be visible through the viewfinder 194 or may be in a separate back window 198. The memory card 72 is positioned in a slot 200 provided in a sidewall of the camera body. This camera has the appearance of a standard SLR 35 millimeter camera. In addition, where desired, an integral cellular phone can be incorporated in the camera housing and transmission can be sent directly from the camera housing to a remote receiving station. The keypad for the telephone is indicated at 202.

Fig. 8 is an illustration of an exemplary schematic diagram for the circuit of a system according to the teaching of the invention as specifically taught in the diagram of Fig. 5. Pin numbers, wiring harnesses and components are as shown on the drawing. Fig. 8, part A, is the system interconnect and shows the central processor board 300, the

Kyocera Ex. 1012
p. 29

video board 302, the power board 304 and the CRT electronic interconnect board 306. The telephone interface is provided at 307. Board 308 is the audio connector board. Board 310 is the serial connector board and board 312 is the video connector board. Fig. 8, part B contains the audio logic, with audio I/O at 314. The audio amplifiers are designated 316 and 318. A microphone connector is provided at 320, with preamplifier circuit 322. Audio switches are provided at 324 and 326. Summing circuit 328 provides audio summing. The serial RAM for audio is designated 330. Fig. 8, part C includes the camera module 332 and the camera control digital to analog convertor 334. Amplifier 336 is the video buffer. Module 338 is the camera shutter control resistor.

Fig. 8, part D contains the central processor unit 340. Voltage in is at 342, with the power switch at FET 344. Power shutdown is provided at the video shutdown bit 346. The video connector is designated at 348. Pin 1 is switched five volts out to video logic. Pins 2-9 are connected to the video data bus and pins 10-22 are video control signals. Buffers 350 and 352 are the video board I/O isolation buffers. As shown, pin 19 of buffer 352 is the output enable and is connected to the video shutdown bit 346. Line 354 is bus enable. Pin A0 of buffer 350 is the direction control signal and pins A1-A7 are connected to the processor data bus. Pins I0-I7 of buffer 352 are also connected to the processor bus.

The system DRAM memory is designated 356. The processor I/O module is designated 358 and the I/O decoder is provided at 360. A non-volatile RAM 362 provides system parameters. The processor oscillator is shown at 364 and a real time clock at 366. Controller 368 is the RAM card controller. The PCMCIA socket for the RAM card is shown at 370a and 370b. The modem is designated 372. The serial controller is shown at 374 with serial controller oscillator 376. Module 378 is a memory module. A signal buffer is provided at 380, and an address decoder at 382. Connectors are designated at 384, 386 and 388.

Fig. 8, part E shows the modem board connector at 390, the glue logic PLD at 392 and the glue logic module at 394. Module 396 is the synchronous/asynchronous serial controller. Circuit 398 is the signal multiplex relay and circuit 400 is the transmit/PTT relay. Bypass relays are shown at 402. Relay 404 is the digital mode

Kyocera Ex. 1012
p. 30

relay. Transformer 406 is the audio isolation transformer. Circuit 408 provides a low speed data filter. The line drivers are designated 410 and the line rectifiers are designated 412, respectively. Connector 414 provides radio/serial data connection.

Fig. 8, part F shows the status LED's 416 and the PCMCIA door open switch 418. Fig. 8, part G shows the power switches 420. Fig. 8, part H is the battery pack 422.

Fig. 8, part I is the power supply. The rechargeable battery connection is shown at 424, with DC power input at 426. An internal battery/external DC input transfer relay is provided at 430. The signal for the power switch on the removable disk drive access door is on pins 3,4 of connector 428. The voltage IN regulator is designated at 432, with the processor voltage regulator designated 434. The processor power control bit is at 436. The system power control bit is at 438, with the system voltage regulator at 440. The video power control bits are at 442 and 444, with the video voltage regulators at 446 and 448, respectively. Battery 450 is the real time clock battery. Connector 452 is the battery charger connector. Connector 454 connects processor power, system power, regulated battery power and real time clock power, as shown. Connector 456 connects video power. The power sequencer circuit is at 458.

Fig. 8, part J shows the direct access arrangement to a land line telephone at 460 and the video viewfinder circuitry (CRT electronics) at 462.

Fig. 8, part K is the video control circuitry. The video input amplifier is designated at 464. The composite video sync stripper is designated at 466. The video H/V timing pulse generator is at 468 and the video phase lock loop at 470. The register 472 is the video control register. Circuit 474 provide programmable video filters--edge enhancers, with the FET switch designated at 476. The video filter circuit is at 478 and the video filter is at 480. The video reference digital to analog circuit is shown at 482, with the video analog to digital circuit at 484 and the video analog to digital data out buffer at 486. The voltage reference circuit is designated at 488.

Fig. 8, part L shows the push button control switches as 490 and 492. The keyboard display is designated 494, and the microcontroller 496 is the keyboard and keyboard display microcontroller. The backlight circuitry is designated at 498, with the

Kyocera Ex. 1012
p. 31

back light control at 500. Module 502 is the LCD module.

The circuitry supports any of the preferred configurations from a basic real time transmission system via Group-III fax to a comprehensive system supporting both land line and wireless transmission of image, audio and documentary data at both a local and remote station.

The subject invention also permits digitized collection of audio signals through the use of an internal microphone, and external input device, a cellular telephone, land line telephone, wireless radio or other communication system, and digitized audio playback, as well. The playback can be via an internal speaker, out an external out jack to a remote device or via a cellular telephone, land line telephone, wireless radio or other communication system.

The digitized image and audio capture features permit association of audio with an image, as well as data with the image. Useful data associated with the image includes GPS from either internal or external GPS devices, date and time, and text which may be input from an integrated keyboard or from a remote location.

It is an important feature of the invention that the system supports storage of images in an interim storage format including raw video, interim gray scale format and/or half tone format. The image can also be stored in the selected output mode, such as by way of example, a Group III facsimile mode. The versatile capability of the system permits transmission of captured data to a standard bi-level facsimile machine such as Group III, to gray scale facsimile systems or full color facsimile systems, as well as to other remote receiving devices such as, by way of example, personal computers and network servers. The data may be transferred in any of a variety of formats and protocols including JPEG, FAX, emerging new imagery formats, wavelets and data protocols. The invention is adapted to operate in multiple modes, with a unitary capture and send mode or separate capture and store, and send modes.

In the preferred embodiment, the system is adapted for tagging a collected image, video, audio, and other data such as a GPS signal, with a real time clock and added text. This permits the complete historical data to be transmitted simultaneously with the image signal.

It is contemplated that the system of the invention would be self-contained with an integral power unit such as a rechargeable battery source or the like. Therefore, the system is adapted to power up when in use and power down when not activated, preserving power during idle time. The power systems for the video camera, the video input circuits and converters, the modem or other transmission devices and other high drain components may be isolated and only powered when needed. This also permits use of ancillary functions, such as use as a cellular telephone, to proceed without draining the power source by powering idle components. The processor clock rate may also be slowed down during idle mode to further conserve power.

Where desired, the system also includes camera operation control capability through the use of a digital/analog network for converting digital commands to analog signals for controlling the gain, pedestal, setup, white clip, lens focus, and other functions of the camera from a local input device, a remote device or as programmed functions. The central processor may also be used to control camera shutter rate. Other camera features and parameters which may be controlled in this manner are compressor resolution (high, medium, low), field/frame mode, color or monochrome, image spatial resolution (640x430, 320x240, for example), lens and camera adjustments, input selection where multiple cameras are used and the like.

When an integrated communications device is used, such as by way of example, a cellular telephone, the telephone can be isolated from the rest of the system to permit independent use, and independent power up and power off and other cellular phone functions.

In operation, the system permits not only the manual capture, dial (select) and send of images, but may also be fully automated to capture, dial and send, for example, on a timed sequence or in response to a sensor such as a motion sensor or from a remote trigger device. The remote trigger may be activated by an incoming telephone signal, for example. The remote device may also be use for remote loading and downloading of firmware, and of the programmable devices, as well as to provide remote configuration of sampling modes during both the capture and the send functions.

Circular sampling techniques are supported by the data capture system of the

present invention. Fig. 9 is a diagram illustrating exemplary sampling techniques in accordance with the teachings of the invention. As shown in Fig. 9, the time sequence is indicated by the Time Line: t1, t2...tn, with a sample at each time interval, as indicated by S1...Sn. For purposes of illustration, the triggering event occurs at time interval t10. Based on the predetermined programming of the system, images will start to be collected upon triggering event, as shown at 210, for a predetermined period prior to and after trigger, as shown at 212, or immediately preceding the trigger, as shown at 214. This permits "circular image storage" without requiring that all images be collected and stored in order to look at events surrounding a triggering event. The technique is also very useful when multiple overlapping zones are monitored by multiple devices and it is desirable to sequence from device to device without losing any critical images.

This is particularly useful when triggering events are used to initiate transmission of collected image data over the communications system. For example, if a triggering event is motion detected at a motion sensor, it may be useful to look at the images captured for a period of time both prior to and after the actual event. The circuitry of the subject invention permits any circular sampling technique to be utilized depending upon application, such as prior to an after trigger, only after trigger or only before trigger. Again, as an example, it may desirable to look primarily at images captured before a triggering event if the event is a catastrophic event such as an explosion or the like. Other circular sampling techniques may be employed, as well, incorporating multiple cameras, for example, wherein different fields are sampled depending upon the time frame in a sequence of events.

Other configurations are contemplated and are within the teachings of the invention. While specific embodiments have been shown and described herein, it will be understood that the invention includes all modifications and enhancements within the scope and spirit of the claims.

Kyocera Ex. 1012
p. 34

CLAIMS

What is claimed is:

1. An self-contained image processing system for capturing a visual image and transmitting it to a remote receiving station, the image processing system comprising:

   a. An image capture device;

   b. A processor for generating a data signal representing the image;

   c. A communications device adapted for transmitting the data signal to the remote receiving station

   d. a subprocessor for generating a Group-III facsimile compatible signal representing the digital signal.

2. The image processing system of claim 1, further including a memory for receiving and storing the data signal, and wherein the communications device is adapted for recalling the stored data signal from memory.

3. The image processing system of claim 1, wherein said memory is a removable random access medium and wherein the system is adapted for selectively charging and discharging the memory.

4. The image processing system of claim 1, wherein the image capture device is an analog camera for generating an analog image signal and there is further included an analog to digital converter for converting the analog image signal to a digital signal.

5. The image processing system of claim 3, wherein the subprocessor comprises:

   a. A gray scale bit map;

   b. A half tone converter; and

   c. A binary bit map.

6. The image processing system of claim 1, wherein there is further included an integrated wireless telephone associated with the communications device.

7. The image processing system of claim 1, further comprising a housing for housing all of the elements of the system in an integrated body.

8. The image processing system of claim 1, wherein said image capture device is a digital camera.

9. The image processing system of claim 2, ~~further including~~ wherein the cellular device includes a view screen for viewing the captured and stored image.

10. The image processing system of claim 1, further including a facsimile receiving device associated locally with the system for providing a local printer for reproducing the captured image in hard copy.

11. The image processing system of claim 1, wherein the processor is adapted for generating a signal in any of a plurality of selected protocols and wherein the communications device is adapted for transmitting the signal in the proper protocol to a remote, compatible receiving station.

12. The image processing system of claim 1, wherein:

a. The image capture device is an analog video camera for generating a video signal;

b. The processor further comprises:

i. An analog to digital converter;

ii. A sync detector and a video address generator for synchronizing the digital signal with the analog signal for defining the beginning and end of the signal to define a still frame;

iii. A random access memory for receiving and storing the converted, synchronized signal frame-by-frame;

iv. A processor routine for converting the signals stored in the memory to a protocol adapted for transmission to a remote, compatible protocol receiving station;

c. A communications device for transmitting the signal in the proper protocol to the compatible receiving station.

13. The image processing system of claim 1, wherein the system is of modular construction, and the camera, the processor and the communications device are each independent, functional units which may be coupled to one another for defining the assembled system.

14. The image processing system of claim 1, further comprising an audio signal capture device adapted for capturing an audio signal in correlation with the captured video signal.

15. The image processing system of claim 1, further comprising a data processor for creating a text data signal associated with said image data signal.

16. The image processing system of claim 2, wherein said image data signal is stored in a raw video format.

17. The image processing system of claim 2, wherein said image data signal is stored in a compressed format.

18. The image processing system of claim 2, wherein said image data signal is stored in a half-tone format.

19. The image processing system of claim 1, wherein the remote receiving station is a standard bi-level facsimile machine and the image data signal is generated in a standard bi-level facsimile machine format and protocol.

20. The image processing system of claim 1, wherein the remote receiving station is a gray-scale facsimile machine and the image data signal is generated in a gray-scale format and protocol.

21. The image processing system of claim 1, wherein the remote receiving station is a color facsimile machine and the image data signal is generated in a full color format and protocol.

22. The image processing system of claim 1, wherein the remote receiving station is a digital device and the image data is digital.

23. The image processing system of claim 1, further comprising an self-contained power source for powering the system.

24. The image processing system of claim 1, further including control apparatus for remotely controlling operating functions of the image capture device.

25. The image processing system of claim 24, wherein said image capture device is a camera with a shuttered lens and where said control apparatus controls any combination of lens direction, iris, focus and shutter speed.

26. The image processing system of claim 1, further comprising an input device for controlling the processor configuration from a remote location.

27. The image processing system of claim 1, wherein said image capture device may be controlled to capture a plurality of images in controlled order.

28. The image processing system of claim 26, wherein said image capture device may be controlled to capture a plurality of images in a controlled order.

29. A self-contained image processing system for capturing a visual image and transmitting it to a remote receiving station, the image processing system comprising:

a. An image capture device;

b. A processor for generating a data signal representing the image;

c. A communications device adapted for transmitting the data signal to the remote receiving station, wherein the system is of modular construction, and the camera, the processor and the communications device are each independent, functional units which may be coupled to one another for defining the assembled system.

30. The image processing system of claim 29, further including a memory for receiving and storing the data signal, and wherein the communications device is adapted for recalling the stored data signal from memory.

31. The image processing system of claim 29, wherein said memory is a removable random access medium and wherein the system is adapted for selectively charging and discharging the memory.

32. The image processing system of claim 29, wherein the image capture device is an analog camera for generating an analog image signal and there is further included an analog to digital converter for converting the analog image signal to a digital signal.

Kyocera Ex. 1012
p. 39

33. The image processing system of claim 29, further including a subprocessor for generating a Group-III facsimile compatible signal representing the digital signal.

34. The image processing system of claim 29, wherein the subprocessor comprises:

a. A gray scale bit map;

b. A half tone converter; and

c. A binary bit map.

35. The image processing system of claim 29, wherein there is further included an integrated wireless telephone associated with the communications device.

36. The image processing system of claim 29, further comprising a housing for housing all of the elements of the system in an integrated body.

37. The image processing system of claim 29, wherein said image capture device is a digital camera.

38. The image processing system of claim 30, further including a view screen for viewing the captured and stored image.

39. The image processing system of claim 29, wherein the processor is adapted for generating a signal in any of a plurality of selected protocols and wherein the communications device is adapted for transmitting the signal in the proper protocol to a remote, compatible receiving station.

40. The image processing system of claim 29, wherein:

a. The image capture device is an analog video camera for generating a video signal;

Kyocera Ex. 1012
p. 40

b. The processor further comprises:

i. An analog to digital converter;

ii. A sync detector and a video address generator for synchronizing the digital signal with the analog signal for defining the beginning and end of the signal to define a still frame;

iii. A random access memory for receiving and storing the converted, synchronized signal frame-by-frame;

iv. A processor routine for converting the signals stored in the memory to a protocol adapted for transmission to a remote, compatible protocol receiving station;

c. A communications device for transmitting the signal in the proper protocol to the compatible receiving station.

41. The image processing system of claim 29, wherein the processor routine converts the signals to a Group-III facsimile protocol, the system further including a facsimile modem for accepting the signal and transmitting to the compatible receiving station.

42. The image processing system of claim 29, further including a hardwired transmission system and a wireless transmission system associated with the modem and a switching device for selecting in the alternative either the hardwired or the wireless transmission system.

43. The image processing system of claim 40, further including a local facsimile receiving system associated with the modem for providing local hard copy of the stored image signals in the memory.

44. The image processing system of claim 43, further including a switching device for selectively activating and deactivating the local facsimile receiving system.

Kyocera Ex. 1012
p. 41

45. The image processing system of claim 40, wherein the wireless transmission system is a cellular telephone system and wherein the wired transmission system is a land line telephone system, and wherein the processing system further includes and integral cellular telephone and/or and integral land line telephone, and wherein each of said telephones is capable of operating in a standard telephonic format for receiving incoming and transmitting outgoing audio calls.

46. The image processing system of claim 45, further including an interrupt device to prohibit use of the telephones in a standard telephonic mode whenever image data signals are being transmitted.

47. The image processing system of claim 45, wherein the interrupt device further includes a tone generator for generating an audible signal when in the interrupt mode.

48. The image processing system of claim 40, further including an integral viewer for viewing the images stored in the memory.

49. The image processing system of claim 40, wherein the memory is a removable memory medium which may be selectively removed from the system.

50. The image processing system of claim 49, wherein the removable memory medium comprises a PCMCIA card memory.

51. The image processing system of claim 29, further comprising an audio signal capture device adapted for capturing an audio signal in correlation with the captured video signal.

Kyocera Ex. 1012
p. 42

52. The image processing system of claim 29, further comprising a data processor for creating a text data signal associated with said image data signal.

53. The image processing system of claim 30, wherein said image data signal is stored in a raw video format.

54. The image processing system of claim 30, wherein said image data signal is stored in a compressed format.

55. The image processing system of claim 30, wherein said image data signal is stored in a half-tone format.

56. The image processing system of claim 30, wherein the remote receiving station is a standard bi-level facsimile machine and the image data signal is generated in a standard bi-level facsimile machine format and protocol.

57. The image processing system of claim 29, wherein the remote receiving station is a gray-scale facsimile machine and the image data signal is generated in a gray-scale format and protocol.

58. The image processing system of claim 29, further comprising an self-contained power source for powering the system.

59. The image processing system of claim 58, wherein said communications device is adapted to be used independently of the image capture device and the processor, and wherein the power supply is adapted for isolating the power to the communications device from the power to the image capture device and processor.

60. The image processing system of claim 59, further including a power initiation device associated with the image capture device and the processor, wherein the power to the image capture device and the processor is off when the initiation device is not activated.

61. The image processing system of claim 59, wherein the power initiation device is user controlled.

62. The image processing system of claim 59, further including a trigger device for activating the power initiation device.

63. The image processing system of claim 62, wherein the trigger device is a timer.

64. The image processing system of claim 62, wherein said trigger device is triggered by the presence of an image to be captured.

65. The image processing system of claim 64, wherein said trigger device is a motion sensor.

66. The image processing system of claim 29, further including control apparatus for remotely controlling operating functions of the image capture device.

67. The image processing system of claim 66, wherein said image capture device is a camera with a shuttered lens and where said control apparatus any combination of lens direction, iris, focus and shutter speed.

68. The image processing system of claim 29, further comprising an input device for controlling the processor configuration from a remote location.

Kyocera Ex. 1012
p. 44

69. The image processing system of claim 29, wherein said image capture device may be controlled to capture a plurality images in controlled order.

70. A self-contained image processing system for capturing a visual image and transmitting it to a remote receiving station, the image processing system comprising:

a. An image capture device;

b. A processor for generating a data signal representing the image;

c. A communications device adapted for transmitting the data signal to the remote receiving station;

d. A wireless transmission system between the communications device and the compatible receiving station.

71. The image processing system of claim 70, further including a memory for receiving and storing the data signal, and wherein the communications device is adapted for recalling the stored data signal from memory.

72. The image processing system of claim 70, wherein said memory is a removable random access medium and wherein the system is adapted for selectively charging and discharging the memory.

73. The image processing system of claim 70, wherein the image capture device is an analog camera for generating an analog image signal and there is further included an analog to digital converter for converting the analog image signal to a digital signal.

74. The image processing system of claim 70, further including a subprocessor for generating a Group-III facsimile compatible signal representing the digital signal.

75. The image processing system of claim 70, wherein the subprocessor comprises:

a. A gray scale bit map;

b. A half tone converter; and

c. A binary bit map.

76. The image processing system of claim 70, wherein there is further included an integrated wireless telephone associated with the communications device.

77. The image processing system of claim 70, further comprising a housing for housing all of the elements of the system in an integrated body.

78. The image processing system of claim 70, wherein said image capture device is a digital camera.

79. The image processing system of claim 71, further including a view screen for viewing the captured and stored image.

80. The image processing system of claim 74, further including a facsimile receiving device associated locally with the system for providing a local printer for reproducing the captured image in hard copy.

81. The image processing system of claim 70, wherein the processor is adapted for generating a signal in any of a plurality of selected protocols and wherein the communications device is adapted for transmitting the signal in the proper protocol to a remote, compatible receiving station.

82. The image processing system of claim 70, wherein:

a. The image capture device is an analog video camera for generating a video signal;

b. The processor further comprises:

i. An analog to digital converter;

ii. A sync detector and a video address generator for synchronizing the digital signal with the analog signal for defining the beginning and end of the signal to define a still frame;

iii. A random access memory for receiving and storing the converted, synchronized signal frame-by-frame;

iv. A processor routine for converting the signals stored in the memory to a protocol adapted for transmission to a remote, compatible protocol receiving station;

c. A communications device for transmitting the signal in the proper protocol to the compatible receiving station.

83. The image processing system of claim 82, wherein the processor routine converts the signals to a Group-III facsimile protocol, the system further including a facsimile modem for accepting the signal and transmitting to the compatible receiving station.

84. The image processing system of claim 82, further including a hardwired transmission system and a wireless transmission system associated with the modem and a switching device for selecting in the alternative either the hardwired or the wireless transmission system.

85. The image processing system of claim 82, further including a local facsimile receiving system associated with the modem for providing local hard copy of the stored image signals in the memory.

86. The image processing system of claim 85, further including a switching device for selectively activating and deactivating the local facsimile receiving system.

Kyocera Ex. 1012
p. 47

87. The image processing system of claim 82, further including an integral viewer for viewing the images stored in the memory.

88. The image processing system of claim 82, wherein the memory is a removable memory medium which may be selectively removed from the system.

89. The image processing system of claim 88, wherein the removable memory medium comprises a PCMCIA card memory.

90. The image processing system of claim 70, wherein the system is of modular construction, and the camera, the processor and the communications device are each independent, functional units which may be coupled to one another for defining the assembled system.

91. The image processing system of claim 70, further comprising an audio signal capture device adapted for capturing an audio signal in correlation with the captured video signal.

92. The image processing system of claim 70, further comprising a data processor for creating a text data signal associated with said image data signal.

93. The image processing system of claim 92, further including an input device for providing text data to the data processor.

94. The image processing system of claim 93, wherein said input device is user controlled.

95. The image processing system of claim 94, wherein said user controlled input device is an integral keyboard.

96. The image processing system of claim 93, said input device comprising a real time clock.

97. The image processing system of claim 93, said input device comprising a global positioning system.

98. The image processing system of claim 71, wherein said image data signal is stored in a raw video format.

99. The image processing system of claim 71, wherein said image data signal is stored in a compressed format.

100. The image processing system of claim 71, wherein said image data signal is stored in a half-tone format.

101. The image processing system of claim 70, wherein the remote receiving station is a standard bi-level facsimile machine and the image data signal is generated in a standard bi-level facsimile machine format and protocol.

102. The image processing system of claim 70, wherein the remote receiving station is a gray-scale facsimile machine and the image data signal is generated in a gray-scale format and protocol.

103. The image processing system of claim 70, wherein the remote receiving station is a color facsimile machine and the image data signal is generated in a full color format and protocol.

104. The image processing system of claim 70, wherein the remote receiving station is a digital device and the image data is digital.

Kyocera Ex. 1012
p. 49

105. The image processing system of claim 70, further comprising an self-contained power source for powering the system.

106. The image processing system of claim 105, wherein said communications device is adapted to be used independently of the image capture device and the processor, and wherein the power supply is adapted for isolating the power to the communications device from the power to the image capture device and processor.

107. The image processing system of claim 106, further including a power initiation device associated with the image capture device and the processor, wherein the power to the image capture device and the processor is off when the initiation device is not activated.

108. The image processing system of claim 107, wherein the power initiation device is user controlled.

109. The image processing system of claim 107, further including a trigger device for activating the power initiation device.

110. The image processing system of claim 109, wherein the trigger device is a timer.

111. The image processing system of claim 109, wherein the trigger device is triggered by the presence of an image to be captured.

112. A self-contained image processing system for capturing a visual image and transmitting it to a remote receiving station, the image processing system comprising:

a. An image capture device;

b. A processor for generating a data signal representing the image;

c. A communications device adapted for transmitting the data signal to the remote receiving station;

d. A remote trigger device for activating the processing system to initiate image capture.

113. The image processing system of claim 112, wherein the remote receiving station is a digital device and the image data is digital.

114. The image processing system of claim 112, further comprising an self-contained power source for powering the system.

115. The image processing system of claim 114, wherein said communications device is adapted to be used independently of the image capture device and the processor, and wherein the power supply is adapted for isolating the power to the communications device from the power to the image capture device and processor.

116. The image processing system of claim 115, further including a power initiation device associated with the image capture device and the processor, wherein the power to the image capture device and the processor is off when the initiation device is not activated.

117. The image processing system of claim 116, wherein the power initiation device is user controlled.

118. The image processing system of claim 116, further including a trigger device for activating the power initiation device.

119. The image processing system of claim 118, wherein the trigger device is a timer.

Kyocera Ex. 1012
p. 51

120. The image processing system of claim 118, wherein said trigger device is triggered by the presence of an image to be captured.

121. The image processing system of claim 119, wherein said trigger device is a motion sensor.

122. The image processing system of claim 112, further including a memory for receiving and storing the data signal, and wherein the communications device is adapted for recalling the stored data signal from memory.

123. The image processing system of claim 112, wherein said memory is a removable random access medium and wherein the system is adapted for selectively charging and discharging the memory.

124. The image processing system of claim 112, wherein the image capture device is an analog camera for generating an analog image signal and there is further included an analog to digital converter for converting the analog image signal to a digital signal.

125. The image processing system of claim 112, further including a subprocessor for generating a Group-III facsimile compatible signal representing the digital signal.

126. The image processing system of claim 125, wherein the subprocessor comprises:

a. A gray scale bit map;

b. A half tone converter; and

c. A binary bit map.

Kyocera Ex. 1012
p. 52

127. The image processing system of claim 112, wherein there is further included an integrated wireless telephone associated with the communications device.

128. The image processing system of claim 112, further comprising a housing for housing all of the elements of the system in an integrated body.

129. The image processing system of claim 112, wherein said image capture device is a digital camera.

130. The image processing system of claim 112, further including a view screen for viewing the captured and stored image.

131. The image processing system of claim 112, wherein the processor is adapted for generating a signal in any of a plurality of selected protocols and wherein the communications device is adapted for transmitting the signal in the proper protocol to a remote, compatible receiving station.

132. The image processing system of claim 112, wherein:

a. The image capture device is an analog video camera for generating a video signal;

b. The processor further comprises:

i. An analog to digital converter;

ii. A sync detector and a video address generator for synchronizing the digital signal with the analog signal for defining the beginning and end of the signal to define a still frame;

iii. A random access memory for receiving and storing the converted, synchronized signal frame-by-frame;

iv. A processor routine for converting the signals stored in the memory to a protocol adapted for transmission to a remote, compatible protocol receiving station;

Kyocera Ex. 1012
p. 53

c. A communications device for transmitting the signal in the proper protocol to the compatible receiving station.

133. The image processing system of claim 112, wherein the system is of modular construction, and the camera, the processor and the communications device are each independent, functional units which may be coupled to one another for defining the assembled system.

134. The image processing system of claim 112, further comprising an audio signal capture device adapted for capturing an audio signal in correlation with the captured video signal.

135. The image processing system of claim 134, wherein said audio signal capture device is an input device for receiving an externally generated audio signal.

136. The image processing system of claim 112, further comprising a data processor for creating a text data signal associated with said image data signal.

137. The image processing system of claim 121, wherein said image data signal is stored in a raw video format.

138. The image processing system of claim 121, wherein said image data signal is stored in a compressed format.

139. The image processing system of claim 121, wherein said image data signal is stored in a half-tone format.

140. The image processing system of claim 112, wherein the remote receiving station is a standard bi-level facsimile machine and the image data signal is generated in a standard bi-level facsimile machine format and protocol.

Kyocera Ex. 1012
p. 54

141. The image processing system of claim 112, wherein the remote receiving station is a gray-scale facsimile machine and the image data signal is generated in a gray-scale format and protocol.

142. The image processing system of claim 112, wherein the remote receiving station is a color facsimile machine and the image data signal is generated in a full color format and protocol.

143. The image processing system of claim 112, further including control apparatus for remotely controlling operating functions of the image capture device.

144. A modular image processing system for capturing a visual image and transmitting it to a remote receiving station, the image processing system comprising:

a. A camera component for capturing an image;

b. A processor component for generating a digital signal representing the image;

c. A communications component adapted for transmitting the digital image to the remote receiving station; and

d. A unit for housing each of the separate components for forming an assembled system.

145. The system of claim 144, wherein the camera is a hand held system.

146. The system of claim 148, wherein the communications component comprises a wireless communications device.

147. The system of claim 144, wherein the base unit is a housing incorporating a standard hand held video camera and is adapted receiving the processor component and the communications component.

Kyocera Ex. 1012
p. 55

148. The image processing system of claim 144, further including a memory for receiving and storing the data signal, and wherein the communications device is adapted for recalling the stored data signal from memory.

149. The image processing system of claim 144, wherein said memory is a removable random access medium and wherein the system is adapted for selectively charging and discharging the memory.

150. The image processing system of claim 144, wherein the image capture device is an analog camera for generating an analog image signal and there is further included an analog to digital converter for converting the analog image signal to a digital signal.

151. The image processing system of claim 144, further including a subprocess or for generating a Group-III facsimile compatible signal representing the digital signal.

152. The image processing system of claim 144, wherein there is further included an integrated wireless telephone associated with the communications device.

153. The image processing system of claim 144, further including a view screen for viewing the captured and stored image.

154. The image processing system of claim 144, including a hardwired interface between the communications device and the compatible receiving station.

155. The image processing system of claim 144, including a wireless transmission system between the communications device and the compatible receiving station.

858-720-5699

156. The image processing system of claim 144, wherein:

a. The image capture device is an analog video camera for generating a video signal;

b. The processor further comprises:

i. An analog to digital converter;

ii. A sync detector and a video address generator for synchronizing the digital signal with the analog signal for defining the beginning and end of the signal to define a still frame;

iii. A random access memory for receiving and storing the converted, synchronized signal frame-by-frame;

iv. A processor routine for converting the signals stored in the memory to a protocol adapted for transmission to a remote, compatible protocol receiving station;

c. A communications device for transmitting the signal in the proper protocol to the compatible receiving station.

157. The image processing system of claim 144, wherein the system is of modular construction, and the camera, the processor and the communications device are each independent, functional units which may be coupled to one another for defining the assembled system.

158. The image processing system of claim 144, further comprising an audio signal capture device adapted for capturing an audio signal in correlation with the captured video signal.

159. The image processing system of claim 144, further comprising a data processor for creating a text data signal associated with said image data signal.

160. The image processing system of claim 144, wherein the remote receiving station is a standard bi-level facsimile machine and the image data signal is

generated in a standard bi-level facsimile machine format and protocol.

161. The image processing system of claim 144, wherein the remote receiving station is a gray-scale facsimile machine and the image data signal is generated in a gray-scale format and protocol.

162. The image processing system of claim 144, wherein the remote receiving station is a color facsimile machine and the image data signal is generated in a full color format and protocol.

163. The image processing system of claim 144, wherein the remote receiving station is a digital device and the image data is digital.

164. The image processing system of claim 144, further comprising an self-contained power source for powering the system.

165. The image processing system of claim 144, further including control apparatus for remotely controlling operating functions of the image capture device.

166. The image processing system of claim 165, wherein said image capture device is a camera with a shuttered lens and where said control apparatus any combination of lens direction, iris, focus and shutter speed.

167. The image processing system of claim 144, further comprising an input device for controlling the processor configuration from a remote location.

168. A self-contained image processing system for capturing a visual image and transmitting it to a remote receiving station, the image processing system comprising:

a. An image capture device;

b. A processor for generating a data signal representing the image;

c. A communications device adapted for transmitting the data signal to the remote receiving station;

d. An audio signal capture device adapted for capturing an audio signal in correlation with the captured video signal.

169. The image processing system of claim 168, wherein said audio signal capture device is an integral microphone.

170. The image processing system of claim 168, wherein said audio signal capture device is an input device for receiving an externally generated audio signal.

171. The image processing system of claim 168, further comprising a device for outputting processed captured audio signal.

172. The image processing system of claim 168, wherein said audio processor system is adapted for associating an audio signal with an image signal.

173. The image processing system of claim 168, further including a memory for receiving and storing the data signal, and wherein the communications device is adapted for recalling the stored data signal from memory.

174. The image processing system of claim 168, wherein said memory is a removable random access medium and wherein the system is adapted for selectively charging and discharging the memory.

175. The image processing system of claim 168, wherein the image capture device is an analog camera for generating an analog image signal and there is further included an analog to digital converter for converting the analog image signal to a digital signal.

176. The image processing system of claim 168, further including a subprocess or for generating a Group-III facsimile compatible signal representing the digital signal.

177. The image processing system of claim 168, wherein there is further included an integrated wireless telephone associated with the communications device.

178. The image processing system of claim 168, further comprising a housing for housing all of the elements of the system in an integrated body.

179. The image processing system of claim 168, wherein said image capture device is a digital camera.

180. The image processing system of claim 168, wherein the processor is adapted for generating a signal in any of a plurality of selected protocols and wherein the communications device is adapted for transmitting the signal in the proper protocol to a remote, compatible receiving station.

181. The image processing system of claim 1, wherein:

a. The image capture device is an analog video camera for generating a video signal;

b. The processor further comprises:

i. An analog to digital converter;

ii. A sync detector and a video address generator for synchronizing the digital signal with the analog signal for defining the beginning and end of the signal to define a still frame;

iii. A random access memory for receiving and storing the converted, synchronized signal frame-by-frame;

iv. A processor routine for converting the signals stored in the memory to a protocol adapted for transmission to a remote, compatible protocol

receiving station;

c. A communications device for transmitting the signal in the proper protocol to the compatible receiving station.

182. The image processing system of claim 168, wherein the system is of modular construction, and the camera, the processor and the communications device are each independent, functional units which may be coupled to one another for defining the assembled system.

183. The image processing system of claim 168, further comprising a data processor for creating a text data signal associated with said image data signal.

184. The image processing system of claim 168, wherein the remote receiving station is a standard bi-level facsimile machine and the image data signal is generated in a standard bi-level facsimile machine format and protocol.

185. The image processing system of claim 168, wherein the remote receiving station is a gray-scale facsimile machine and the image data signal is generated in a gray-scale format and protocol.

186. The image processing system of claim 168, wherein the remote receiving station is a color facsimile machine and the image data signal is generated in a full color format and protocol.

187. The image processing system of claim 168, wherein the remote receiving station is a digital device and the image data is digital.

188. The image processing system of claim 168, further comprising an self-contained power source for powering the system.

Kyocera Ex. 1012
p. 61

189. The image processing system of claim 168, further including control apparatus for remotely controlling operating functions of the image capture device.

190. The image processing system of claim 1, further comprising an input device for controlling the processor configuration from a remote location.

191. A self-contained image processing system for capturing a visual image and transmitting it to a remote receiving station, the image processing system comprising:

a. An image capture device;

b. A processor for generating a data signal representing the image;

c. A communications device adapted for transmitting the data signal to the remote receiving station, the processor is adapted for generating a signal in any of a plurality of selected protocols and wherein the communications device is adapted for transmitting the signal in the proper protocol to a remote, compatible receiving station.

192. The image processing system of claim 191, further including a memory for receiving and storing the data signal, and wherein the communications device is adapted for recalling the stored data signal from memory.

193. The image processing system of claim 191, wherein said memory is a removable random access medium and wherein the system is adapted for selectively charging and discharging the memory.

194. The image processing system of claim 191, wherein the image capture device is an analog camera for generating an analog image signal and there is further included an analog to digital converter for converting the analog image signal to a digital signal.

195. The image processing system of claim 191, further including a subprocess or for generating a Group-III facsimile compatible signal representing the digital signal.

196. The image processing system of claim 191, wherein there is further included an integrated wireless telephone associated with the communications device.

197. The image processing system of claim 191, further comprising a housing for housing all of the elements of the system in an integrated body.

198. The image processing system of claim 191, wherein said image capture device is a digital camera.

199. The image processing system of claim 191, further including a view screen for viewing the captured and stored image.

200. The image processing system of claim 195, further including a facsimile receiving device associated locally with the system for providing a local printer for reproducing the captured image in hard copy.

201. The image processing system of claim 191, including a hardwired interface between the communications device and the compatible receiving station.

202. The image processing system of claim 191, including a wireless transmission system between the communications device and the compatible receiving station.

203. The image processing system of claim 191, wherein:

a. The image capture device is an analog video camera for generating a video signal;

b. The processor further comprises:

i. An analog to digital converter;

ii. A sync detector and a video address generator for synchronizing the digital signal with the analog signal for defining the beginning and end of the signal to define a still frame;

iii. A random access memory for receiving and storing the converted, synchronized signal frame-by-frame;

iv. A processor routine for converting the signals stored in the memory to a protocol adapted for transmission to a remote, compatible protocol receiving station;

c. A communications device for transmitting the signal in the proper protocol to the compatible receiving station.

204. The image processing system of claim 203, wherein the processor routine converts the signals to a Group-III facsimile protocol, the system further including a facsimile modem for accepting the signal and transmitting to the compatible receiving station.

205. The image processing system of claim 203, further including a hardwired transmission system and a wireless transmission system associated with the modem and a switching device for selecting in the alternative either the hardwired or the wireless transmission system.

206. The image processing system of claim 203, further including a local facsimile receiving system associated with the modem for providing local hard copy of the stored image signals in the memory.

207. The image processing system of claim 203, further including a switching device for selectively activating and deactivating the local facsimile receiving system.

Kyocera Ex. 1012
p. 64

208. The image processing system of claim 204, wherein the wireless transmission system is a cellular telephone system and wherein the wired transmission system is a land line telephone system, and wherein the processing system further includes and integral cellular telephone and/or and integral land line telephone, and wherein each of said telephones is capable of operating in a standard telephonic format for receiving incoming and transmitting outgoing audio calls.

209. The image processing system of claim 208, further including an interrupt device to prohibit use of the telephones in a standard telephonic mode whenever image data signals are being transmitted.

210. The image processing system of claim 208, wherein the interrupt device further includes a tone generator for generating an audible signal when in the interrupt mode.

211. The image processing system of claim 203, further including an integral viewer for viewing the images stored in the memory.

212. The image processing system of claim 203, wherein the memory is a removable memory medium which may be selectively removed from the system.

213. The image processing system of claim 212, wherein the removable memory medium comprises a PCMCIA card memory.

214. The image processing system of claim 191, wherein the system is of modular construction, and the camera, the processor and the communications device are each independent, functional units which may be coupled to one another for defining the assembled system.

Kyocera Ex. 1012
p. 65

215. The image processing system of claim 191, further comprising an audio signal capture device adapted for capturing an audio signal in correlation with the captured video signal.

216. The image processing system of claim 191, further comprising a data processor for creating a text data signal associated with said image data signal.

217. The image processing system of claim 216, further including an input device for providing text data to the data processor.

218. The image processing system of claim 217, wherein said input device is user controlled.

219. The image processing system of claim 218, wherein said user controlled input device is an integral keyboard.

220. The image processing system of claim 216, said input device comprising a real time clock.

221. The image processing system of claim 217, said input device comprising a global positioning system.

222. The image processing system of claim 191, wherein the remote receiving station is a standard bi-level facsimile machine and the image data signal is generated in a standard bi-level facsimile machine format and protocol.

223. The image processing system of claim 191, wherein the remote receiving station is a gray-scale facsimile machine and the image data signal is generated in a gray-scale format and protocol.

Kyocera Ex. 1012
p. 66

224. The image processing system of claim 191, wherein the remote receiving station is a color facsimile machine and the image data signal is generated in a full color format and protocol.

225. The image processing system of claim 191, wherein the remote receiving station is a digital device and the image data is digital.

226. The image processing system of claim 191, further comprising an self-contained power source for powering the system.

227. The image processing system of claim 191, further including control apparatus for remotely controlling operating functions of the image capture device.

228. The image processing system of claim 227, wherein said image capture device is a camera with a shuttered lens and where said control apparatus any combination of lens direction, iris, focus and shutter speed.

229. The image processing system of claim 227, further comprising an input device for controlling the processor configuration from a remote location.

230. A self-contained image processing system for capturing a visual image and transmitting it to a remote receiving station, the image processing system comprising:

a. An image capture device;

b. A processor for generating a data signal representing the image;

c. A communications device adapted for transmitting the data signal to the remote receiving station;

d. A self-contained power source for powering the system.

231. The image processing system of claim 230, wherein said communications device is adapted to be used independently of the image capture device and the processor, and wherein the power supply is adapted for isolating the power to the communications device from the power to the image capture device and processor.

232. The image processing system of claim 231, further including a power initiation device associated with the image capture device and the processor, wherein the power to the image capture device and the processor is off when the initiation device is not activated.

233. The image processing system of claim 232, wherein the power initiation device is user controlled.

234. The image processing system of claim 232, further including a trigger device for activating the power initiation device.

235. The image processing system of claim 234, wherein the trigger device is a timer.

236. The image processing system of claim 234, wherein said trigger device is triggered by the presence of an image to be captured.

237. The image processing system of claim 236, wherein said trigger device is a motion sensor.

238. The image processing system of claim 230, further including a memory for receiving and storing the data signal, and wherein the communications device is adapted for recalling the stored data signal from memory.

239. The image processing system of claim 230, wherein said memory is a removable random access medium and wherein the system is adapted for selectively charging and discharging the memory.

240. The image processing system of claim 230, wherein the image capture device is an analog camera for generating an analog image signal and there is further included an analog to digital converter for converting the analog image signal to a digital signal.

241. The image processing system of claim 230 further including a subprocess or for generating a Group-III facsimile compatible signal representing the digital signal.

242 The image processing system of claim 230, wherein there is further included an integrated wireless telephone associated with the communications device.

243. The image processing system of claim 230, further comprising a housing for housing all of the elements of the system in an integrated body.

244. The image processing system of claim 230, wherein said image capture device is a digital camera.

245. The image processing system of claim 230, further including a facsimile receiving device associated locally with the system for providing a local printer for reproducing the captured image in hard copy.

246. The image processing system of claim 230, wherein the system is of modular construction, and the camera, the processor and the communications device are each independent, functional units which may be coupled to one another for defining the assembled system.

Kyocera Ex. 1012
p. 69

247. The image processing system of claim 230, further comprising an audio signal capture device adapted for capturing an audio signal in correlation with the captured video signal.

248. A method for capturing an analog image signal and converting it to a digital signal for transmission over a telephone system, the method comprising the steps of:

a. capturing the image as an analog image signal with a standard analog image capture device;

b. converting the analog image signal to a digital data signal;

c. defining a beginning of frame and an end of frame portion of the signal;

d. storing a complete frame; and

e. transmitting the stored frame over a telephone system to a remote receiving device.

249. The method of claim 248, wherein the transmitting step further included transmitting the stored frame of a cellular telephone.

250. The method of claim 249, further including the step of selectively transmitting the stored frame over a land line telephone.

251. The method of claim 250, further including the step of isolating the cellular telephone whenever the land line telephone transmitting step is selected.

252. The method of claim 248, further including the step of automatically activating steps 248b, 248c, 248d and 248e whenever an image is present to be captured.

Kyocera Ex. 1012
p. 70

253. A sampling method for capturing for retrieval a visual image record of an incident, comprising the steps of:

a. monitoring a zone wherein images will appear;

b. activating a capture device in response to a trigger signal;

c. capturing the images in the zone in response to a predetermined set of conditions ranging from a period of time preceding the trigger signal to a period of time following the trigger signal;

d. utilizing the captured images to reconstruct the events occurring in the zone.

254. The sampling method of claim 253, wherein utilization includes the step of storing the captured images for archival purposes.

255. The sampling method of claim 253, wherein utilization includes the step of transmitting the captured images to a remote location for monitoring purposes.

256. The sampling method of claim 255, wherein said transmission occurs on a near real time basis.

257. The method of claim 253, wherein said trigger signal is a timer.

258. The method of claim 253, further including the step of monitoring the audio conditions in the zone and wherein said triggering signal is an audio sensor.

259, The method of claim 253, further including the step of monitoring the motion conditions in the zone and wherein said triggering signal is a motion sensor.

260. The method of claim 253, wherein said capturing step includes capturing a predetermined set of images preceding the trigger signal.

261. The method of claim 253, wherein said capturing step includes capturing a predetermined set of images following the trigger signal.

262. The method of claim 253, wherein said capturing step includes capturing a predetermined set of images both preceding and following the trigger signal.

263. An portable, self-contained handheld image processing system for capturing a visual image and transmitting it to a remote receiving station, the image processing system comprising:

a. a camera for capturing an image;

b. a processor for generating a digital signal representing the image;

c. a communications device adapted for transmitting the digital image to the remote receiving station.

264. The system of claim 263, further including an integral cellular telephone for defining the communications device.

265. The system of claim 263, wherein all of the components of the system are housed in a single housing.

266. The system of claim 265, wherein said housing resembles a standard 35 millimeter camera body.

ABSTRACT

An image capture, conversion, compression, storage and transmission system provides a data signal representing the image in a format and protocol capable of being transmitted over any of a plurality of readily available transmission systems and received by readily available, standard equipment receiving stations. In its most comprehensive form, the system is capable of sending and receiving audio, documentary and visual image data to and from standard remote stations readily available throughout the world.

862TTO'E2090060

FIG. 1

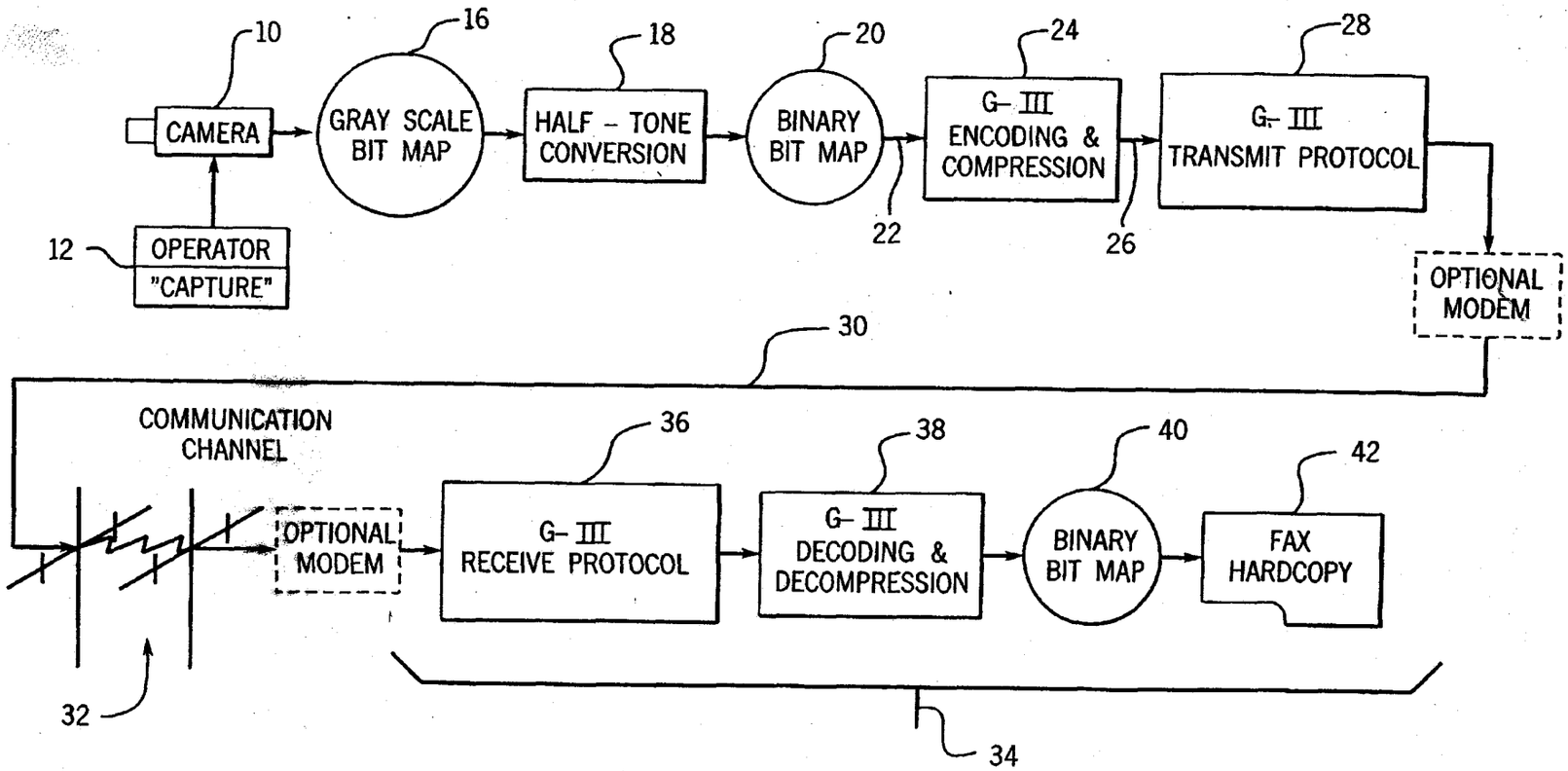

TYPICAL GROUP III FAX DEVICE

JAN-12-98 03:25 PM DAVID HENDRICKSON 414 352 1855 P.02

Kyocera Ex. 1012
p. 74

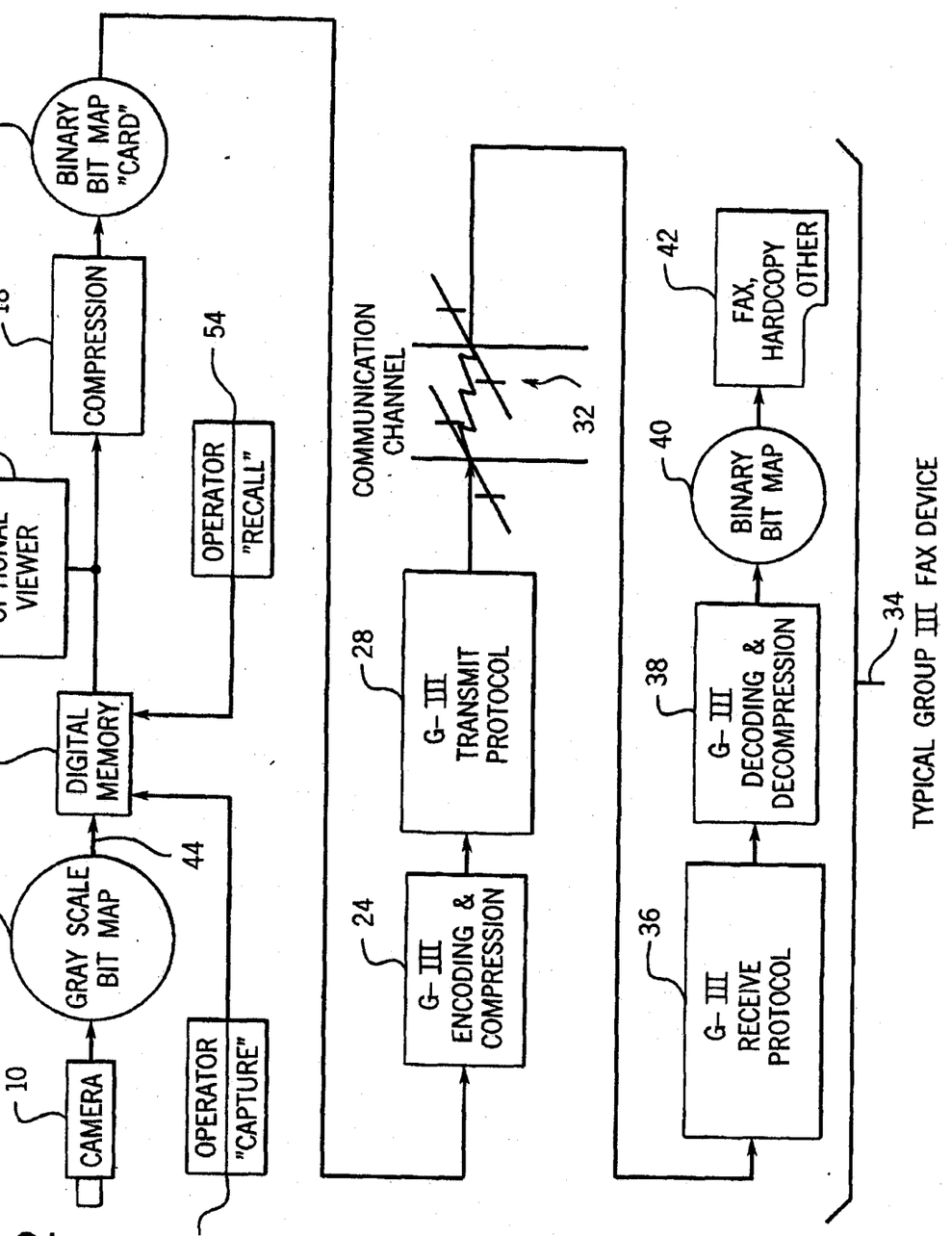

FIG. 2

Kyocera Ex. 1012
p. 75

FIG. 3

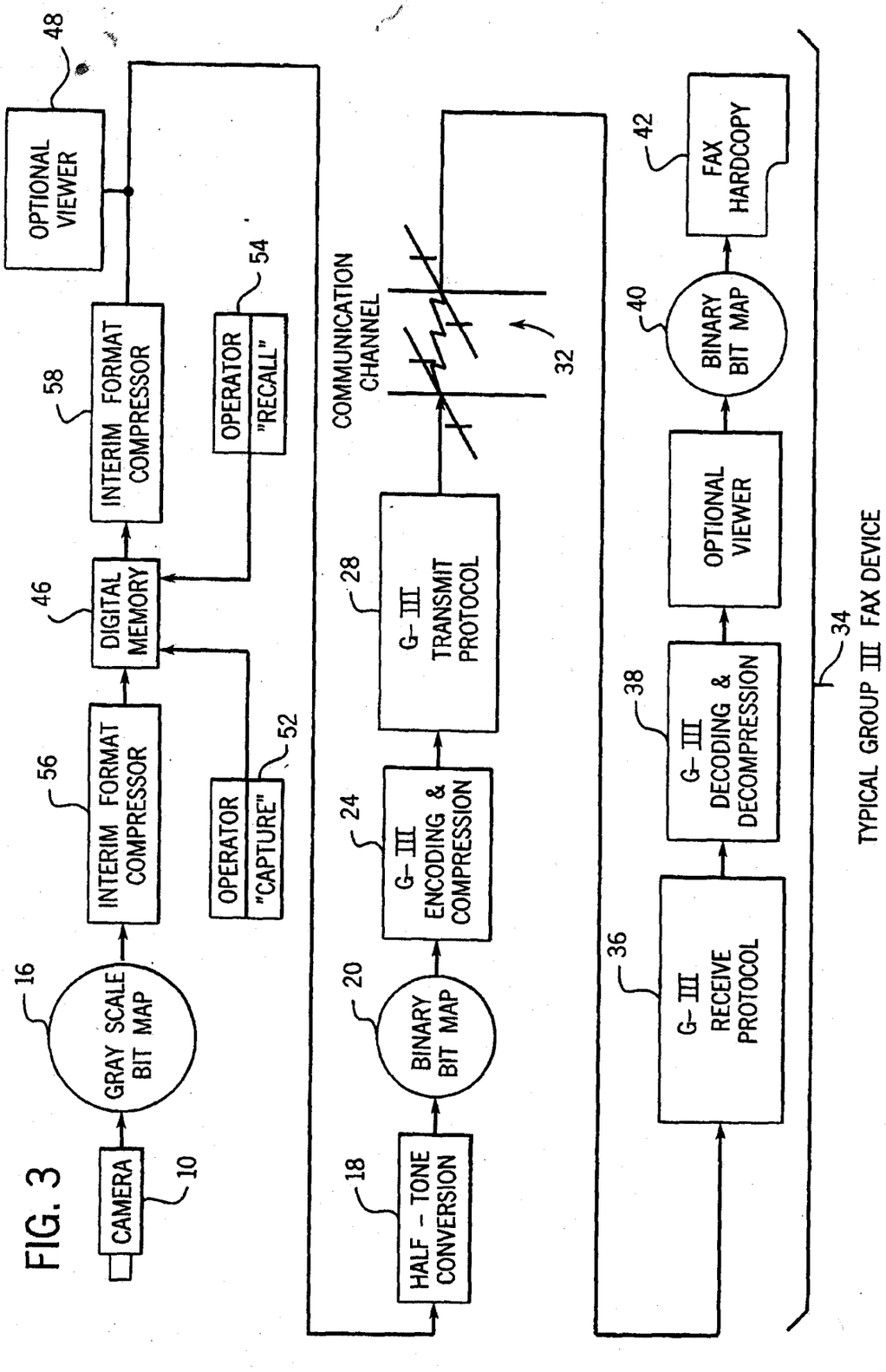
CAMERA
10
GRAY SCALE BIT MAP
16
INTERIM FORMAT COMPRESSOR
56
DIGITAL MEMORY
46
INTERIM FORMAT COMPRESSOR
58
OPTIONAL VIEWER
48
OPERATOR "CAPTURE"
52
OPERATOR "RECALL"
54
HALF - TONE CONVERSION
18
BINARY BIT MAP
20
G- III ENCODING & COMPRESSION
24
G- III TRANSMIT PROTOCOL
28
COMMUNICATION CHANNEL
32
G- III RECEIVE PROTOCOL
36
G- III DECODING & DECOMPRESSION
38
OPTIONAL VIEWER
BINARY BIT MAP
40
FAX HARDCOPY
42
TYPICAL GROUP III FAX DEVICE
34

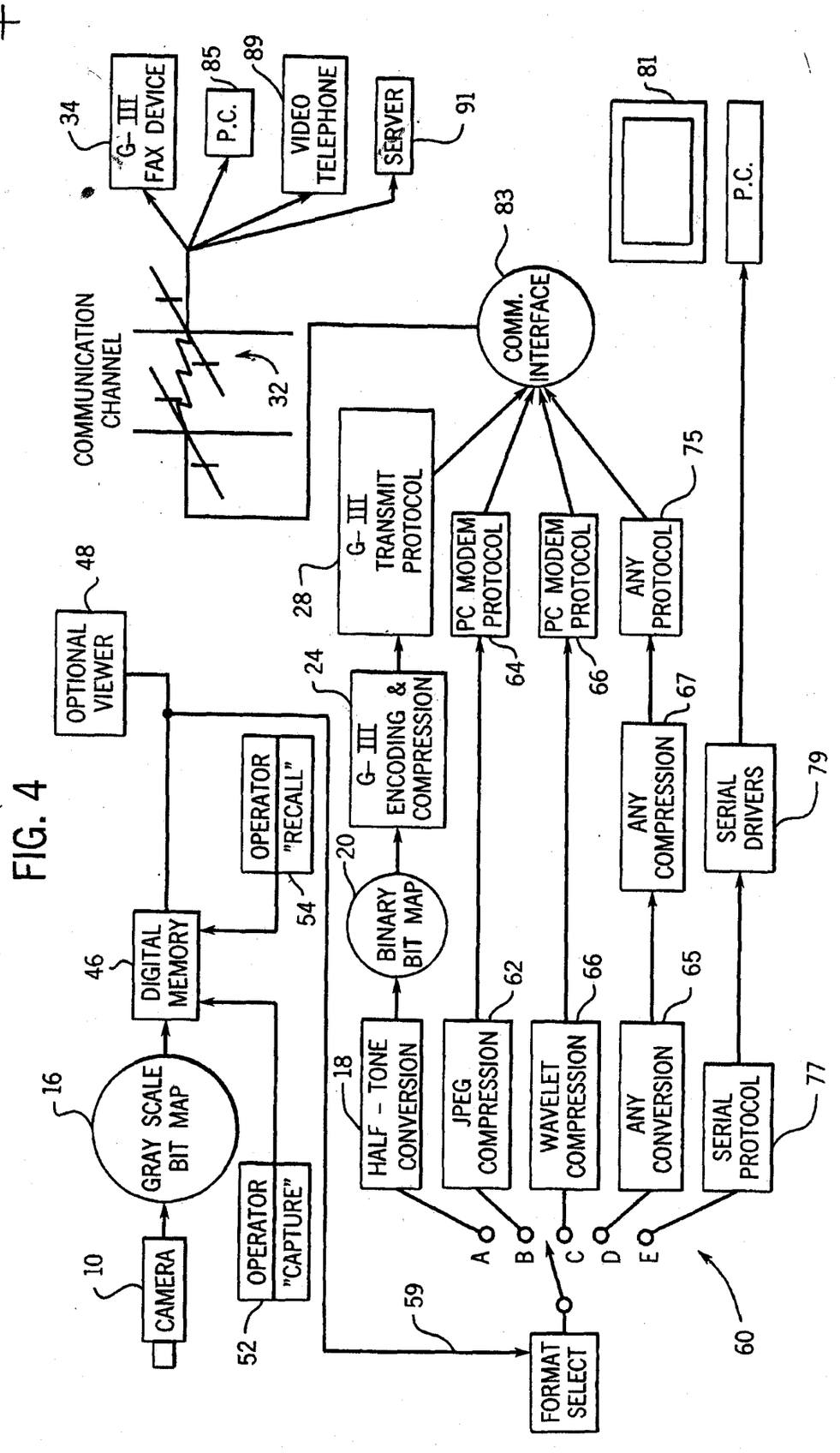

FIG. 4

Kyocera Ex. 1012
p. 77

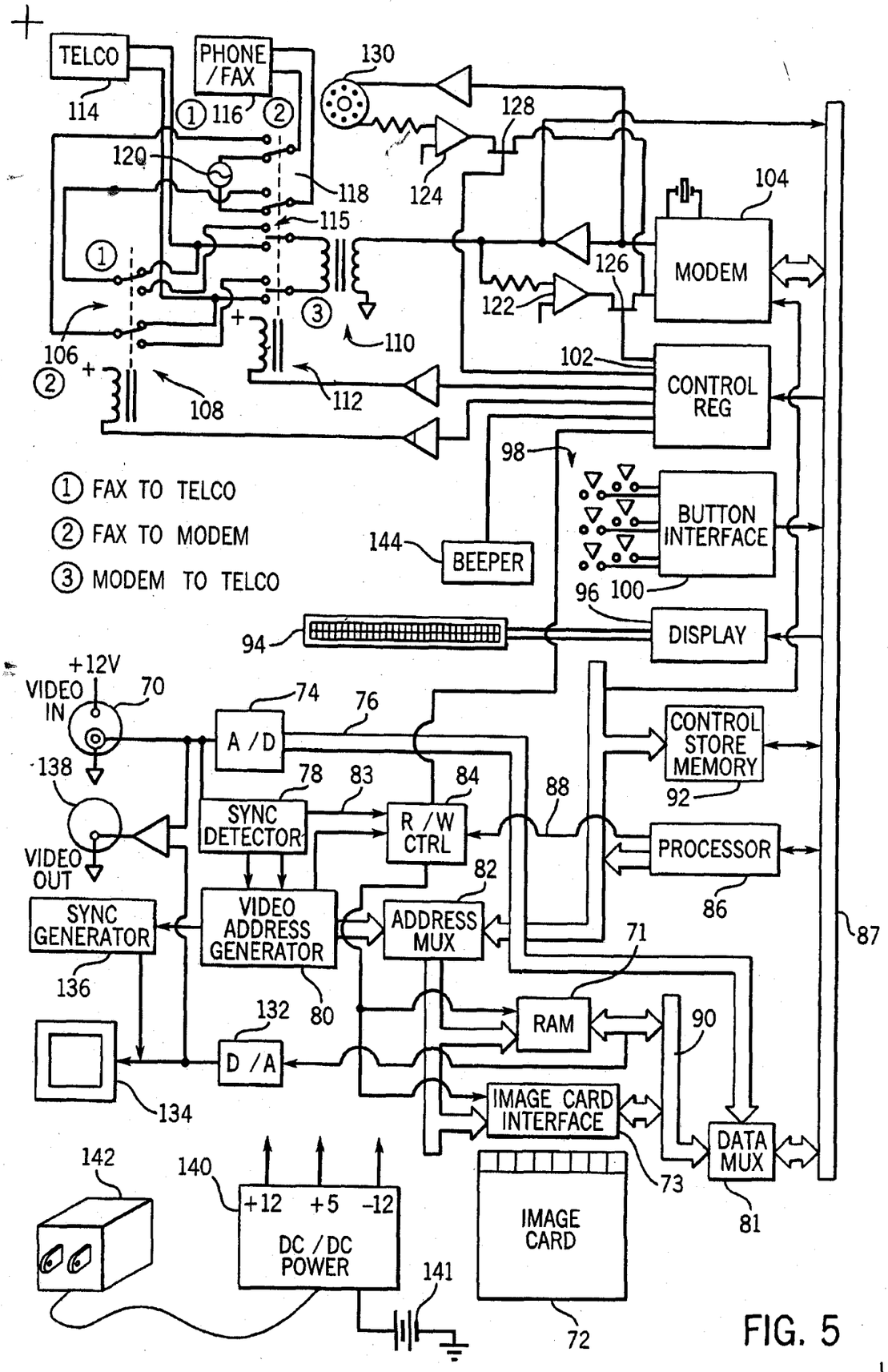

FIG. 5

Kyocera Ex. 1012
p. 78

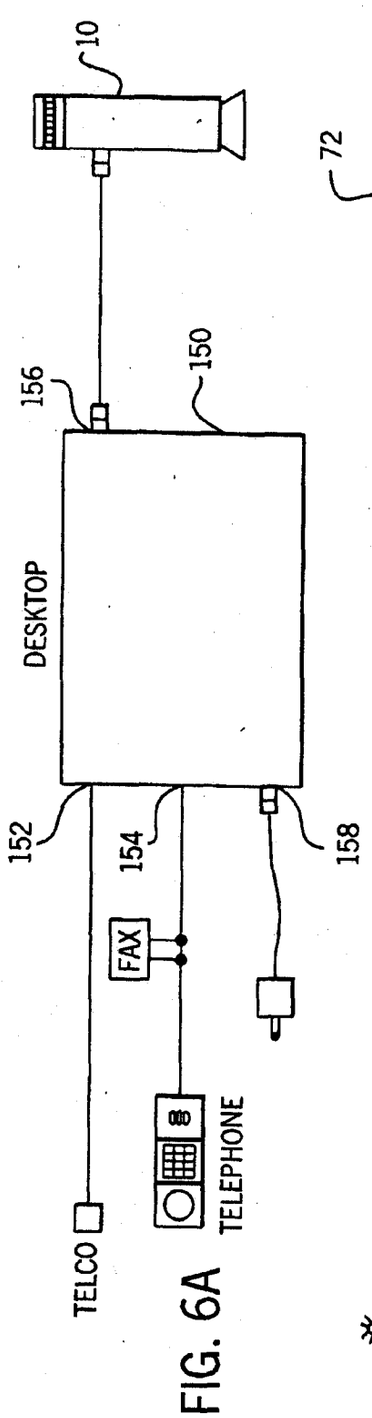
10
156
150
DESKTOP
152
154
158
FAX
TELCO
TELEPHONE

FIG. 6A

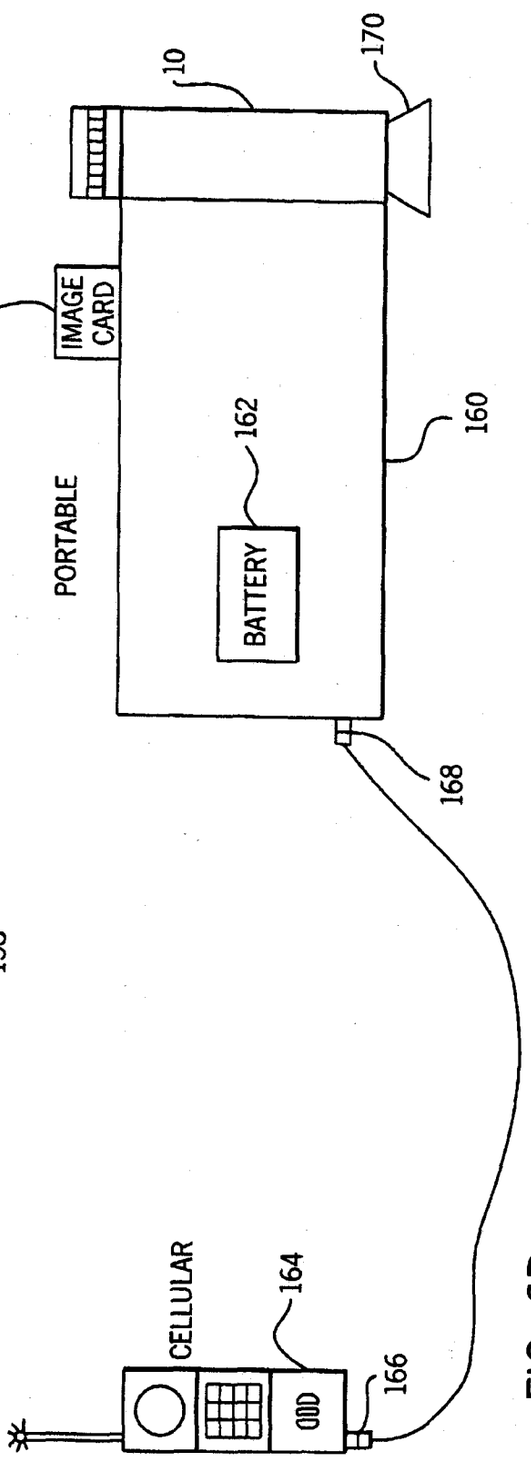
10
170
72
IMAGE CARD
PORTABLE
162
160
BATTERY
168
CELLULAR
164
166

FIG. 6B

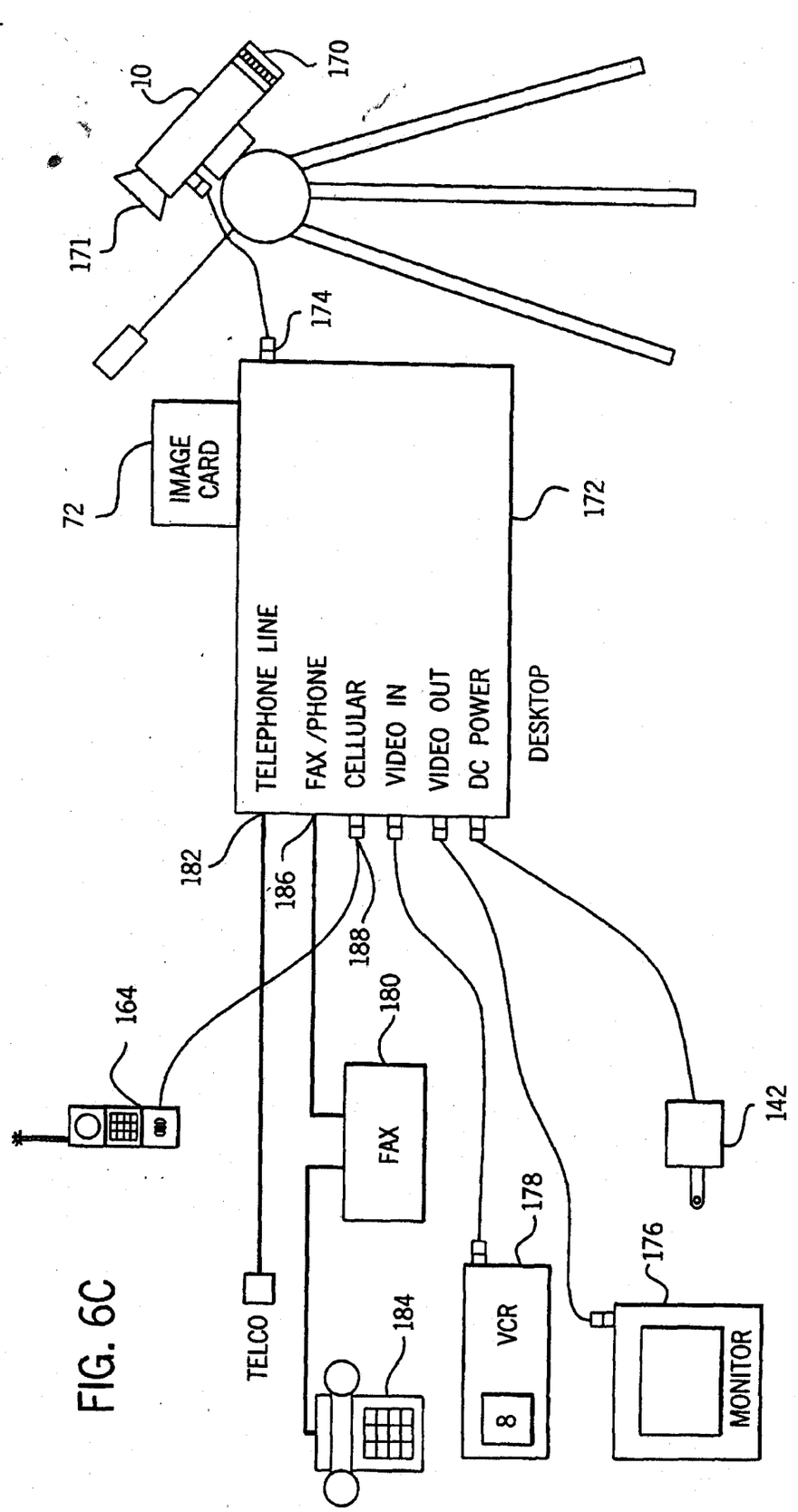
10
170
171
174
72
IMAGE CARD
172
TELEPHONE LINE
FAX /PHONE
CELLULAR
VIDEO IN
VIDEO OUT
DC POWER
DESKTOP
182
186
188
164
180
FAX
142
178
176
TELCO
184
VCR
8
MONITOR

FIG. 6C

FIG. 7A

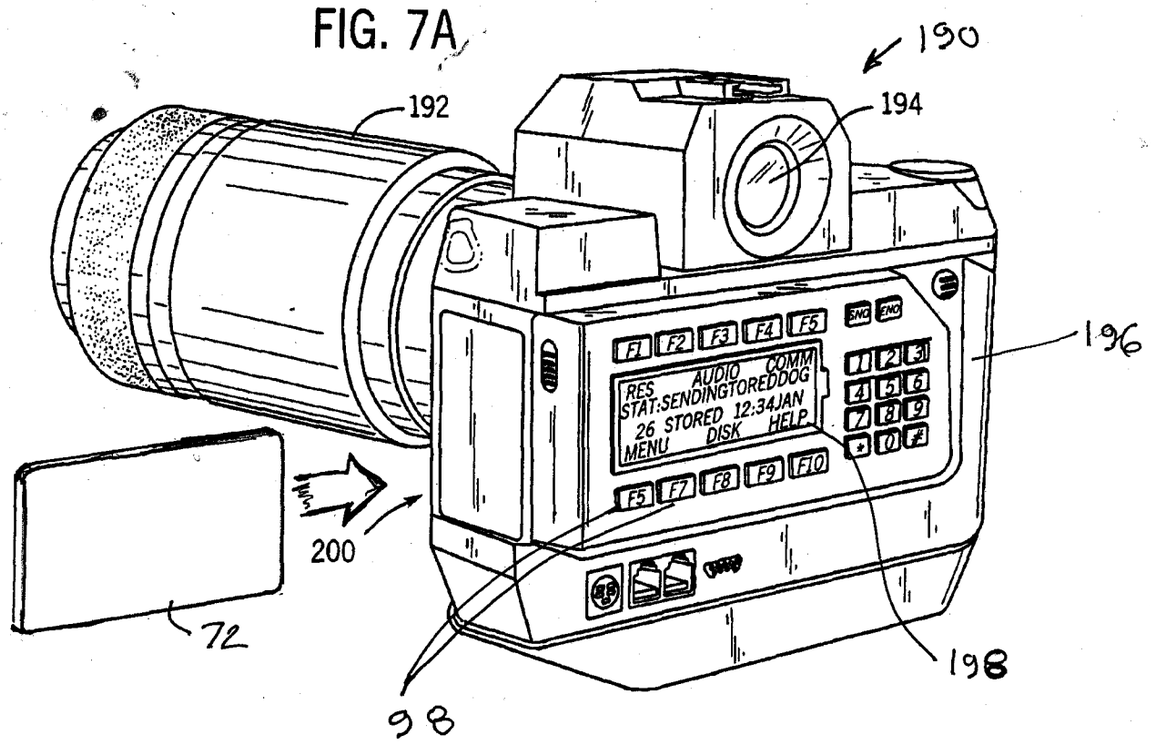
190
192
194
196
198
200
72
98
F1 F2 F3 F4 F5
RES AUDIO COMM
STAT:SENDINGTOREDDOG
26 STORED 12:34JAN
MENU DISK HELP
F5 F7 F8 F9 F10

FIG. 7B

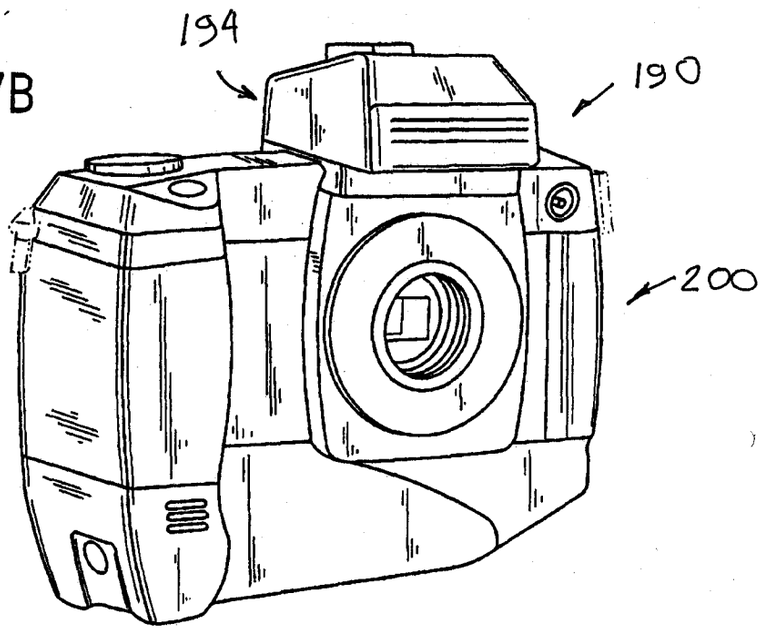
194
190
200

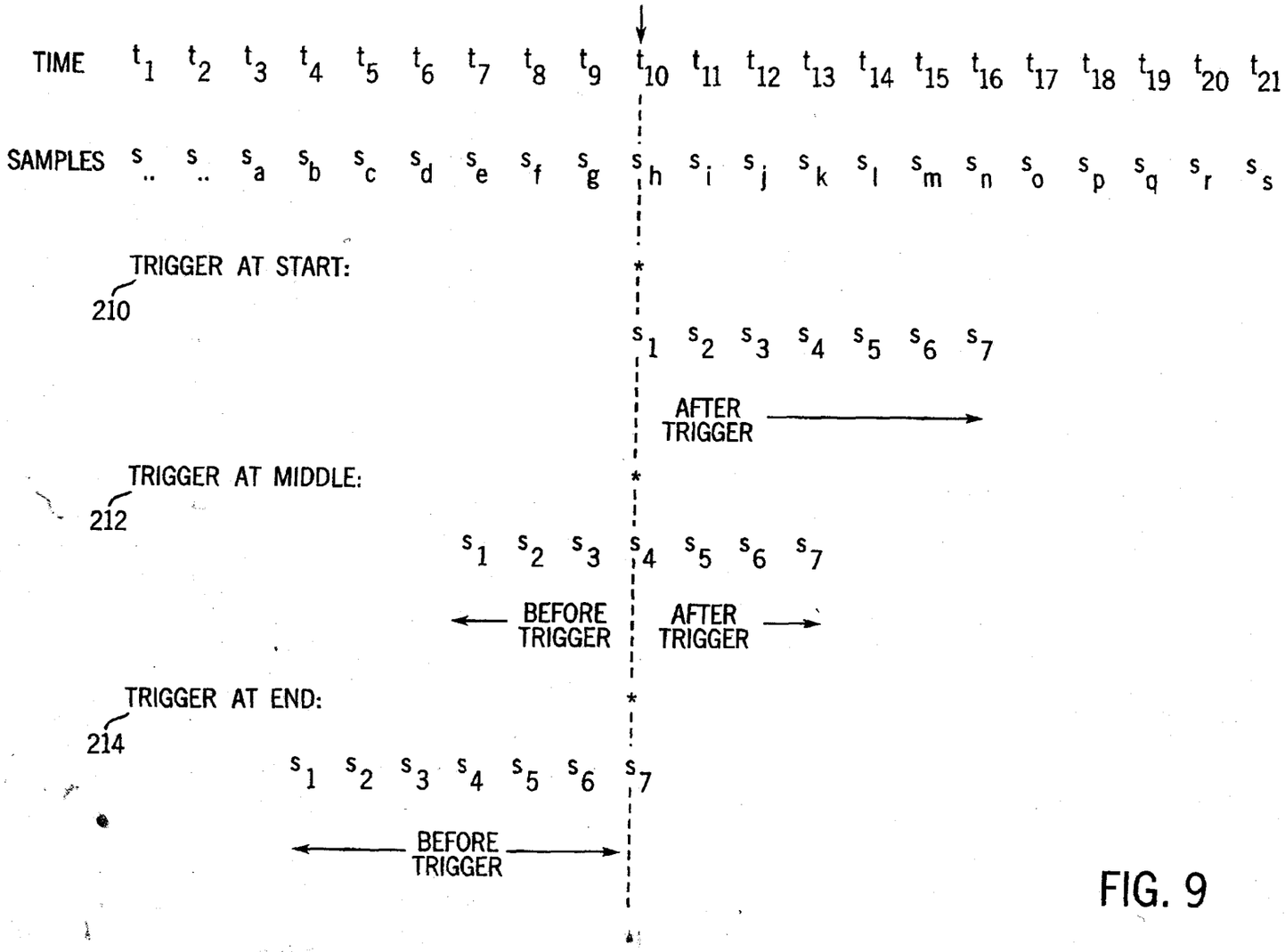

FIG. 9

JAN-12-98 03:32 PM DAVID HENDRICKSON 414 352 1855 P.10
04/00907
Kyocera Ex. 1012
p. 82

862TO'E2090060

FIG. 1

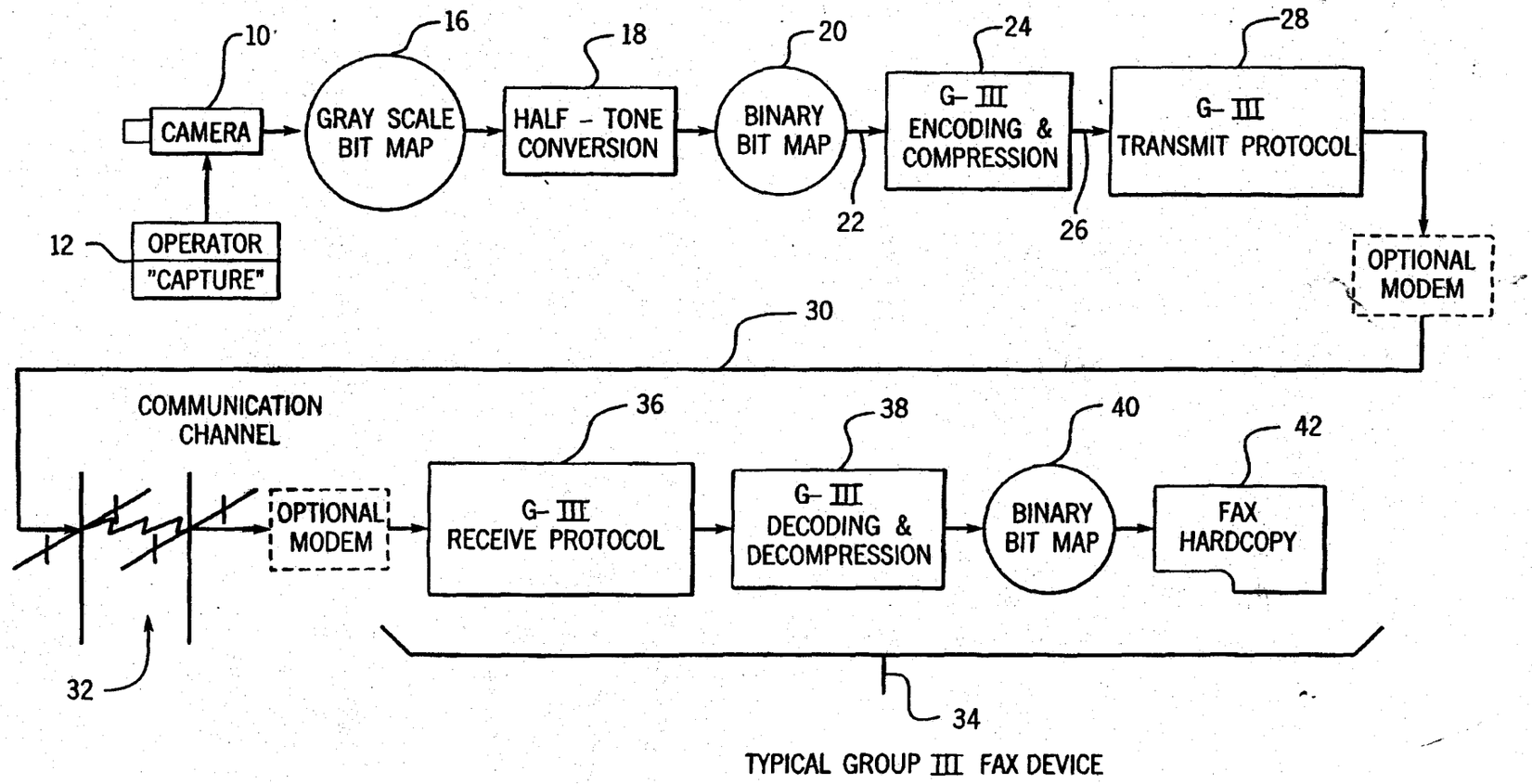

TYPICAL GROUP III FAX DEVICE

· JAN- PRINT OF DRAWINGS AS ORIGINALLY FI
FENWICK
414 352 1855
P.02

Kyocera Ex. 1012
p. 83

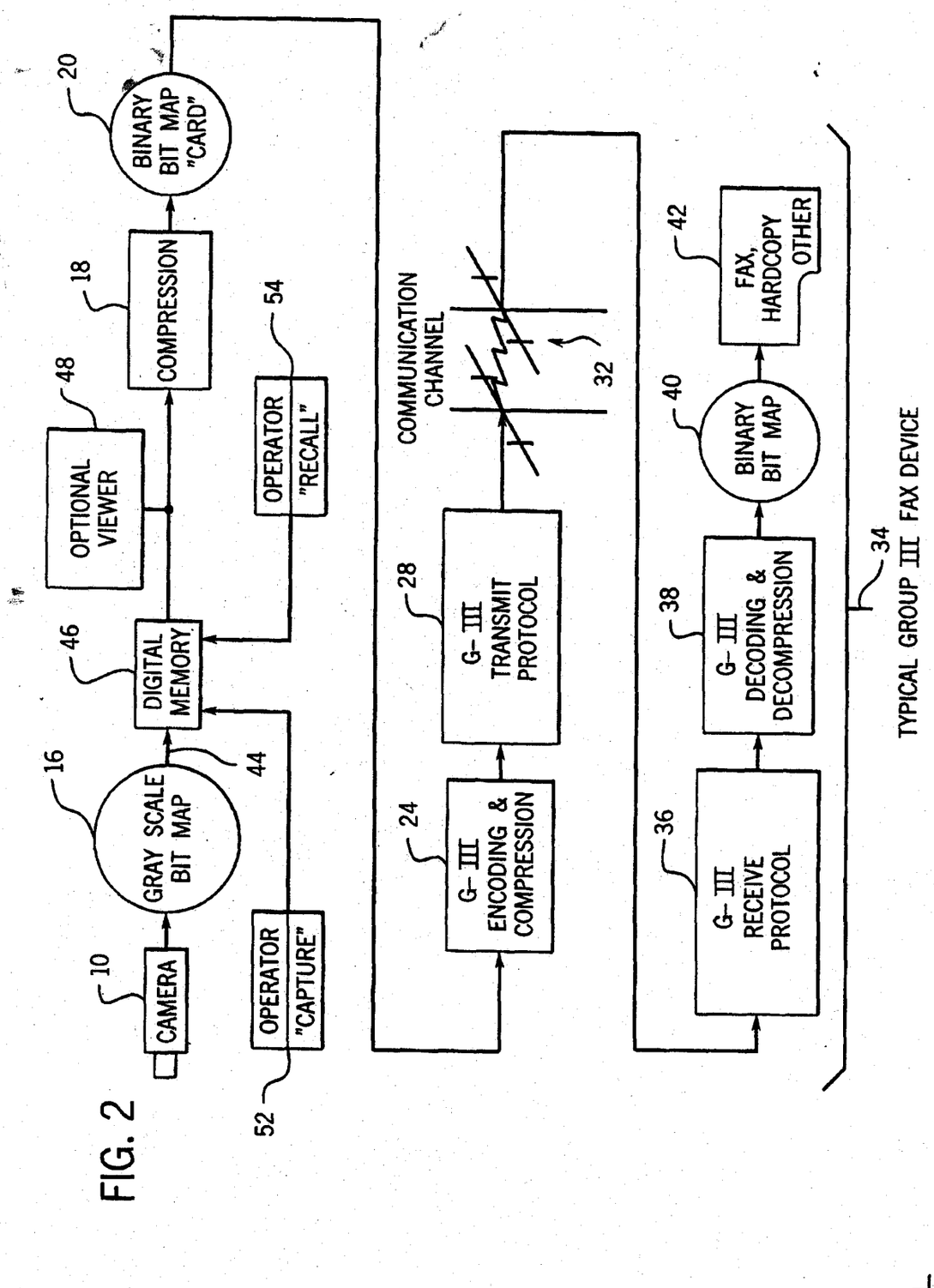

FIG. 2

Kyocera Ex. 1012
p. 84

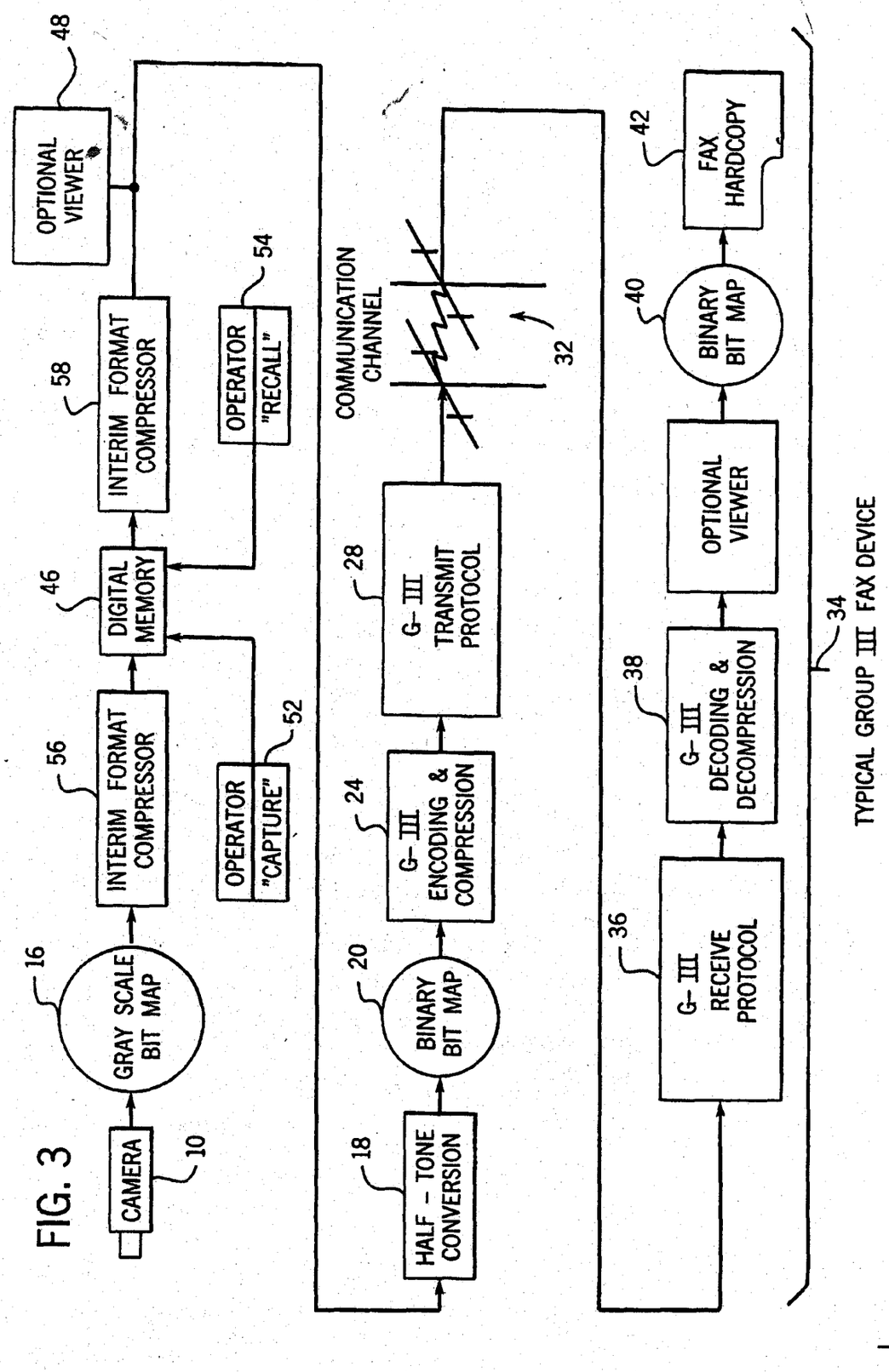

FIG. 3

Kyocera Ex. 1012
p. 85

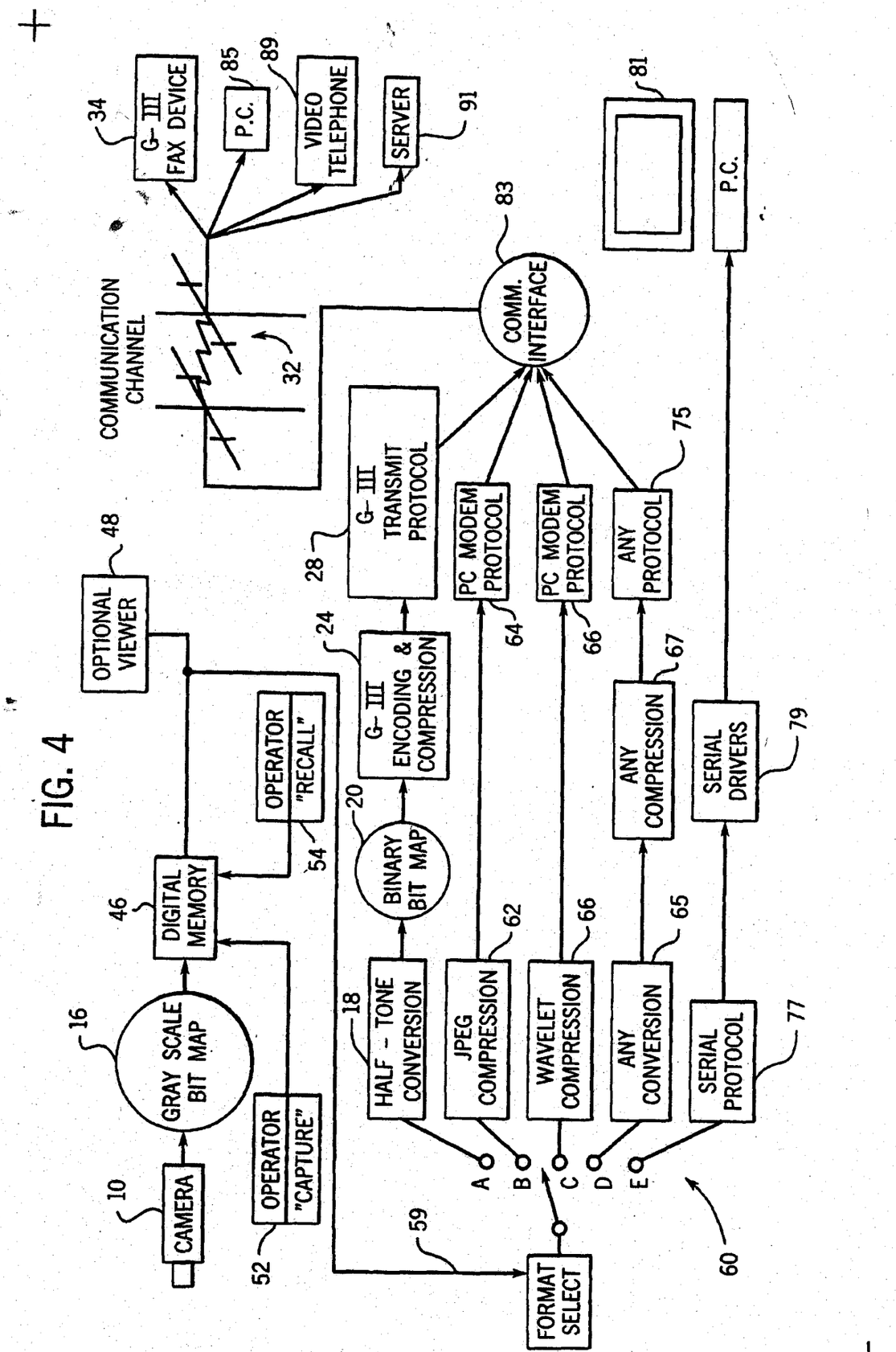

FIG. 4

Kyocera Ex. 1012
p. 86

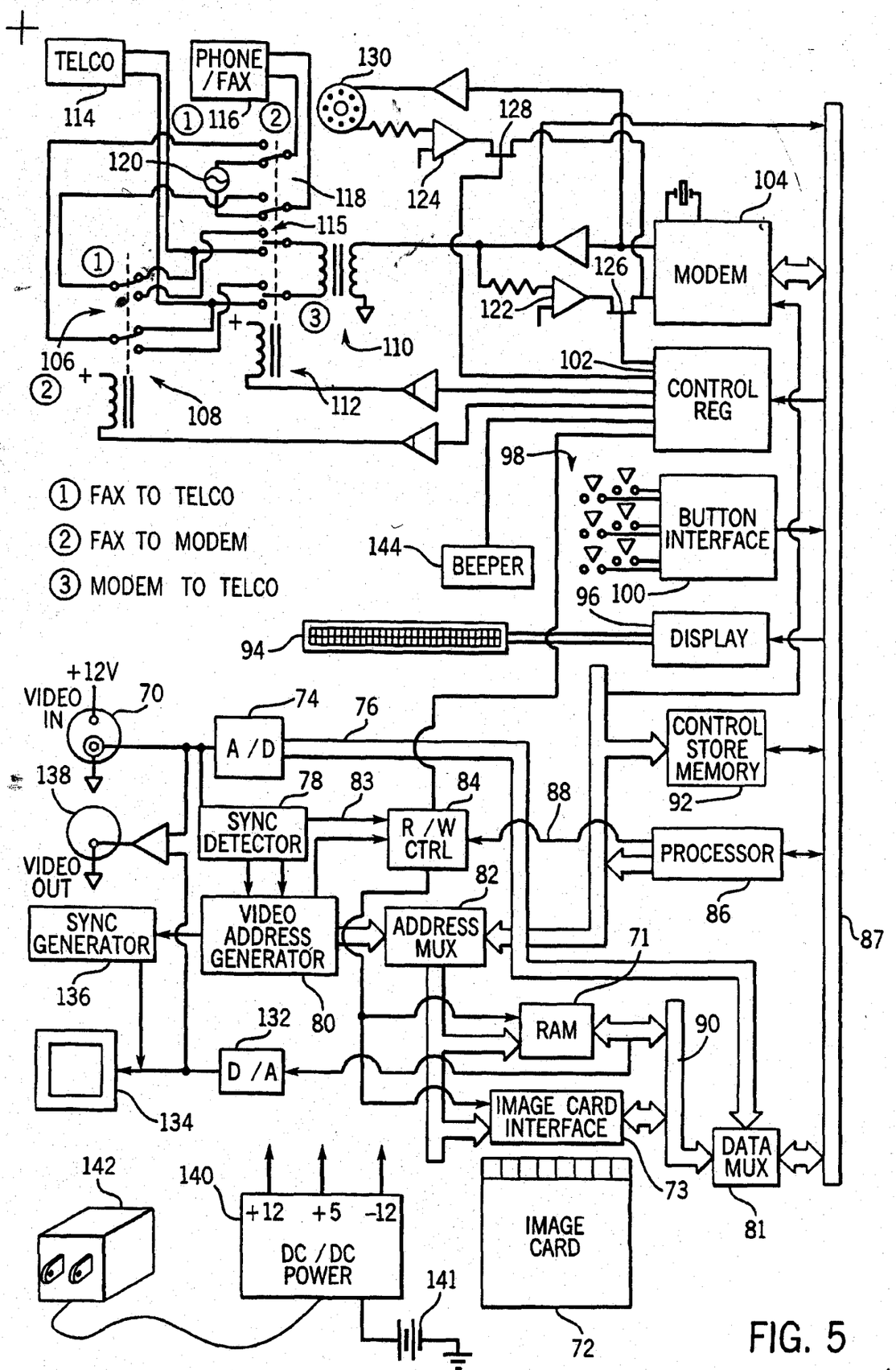

FIG. 5

Kyocera Ex. 1012
p. 87

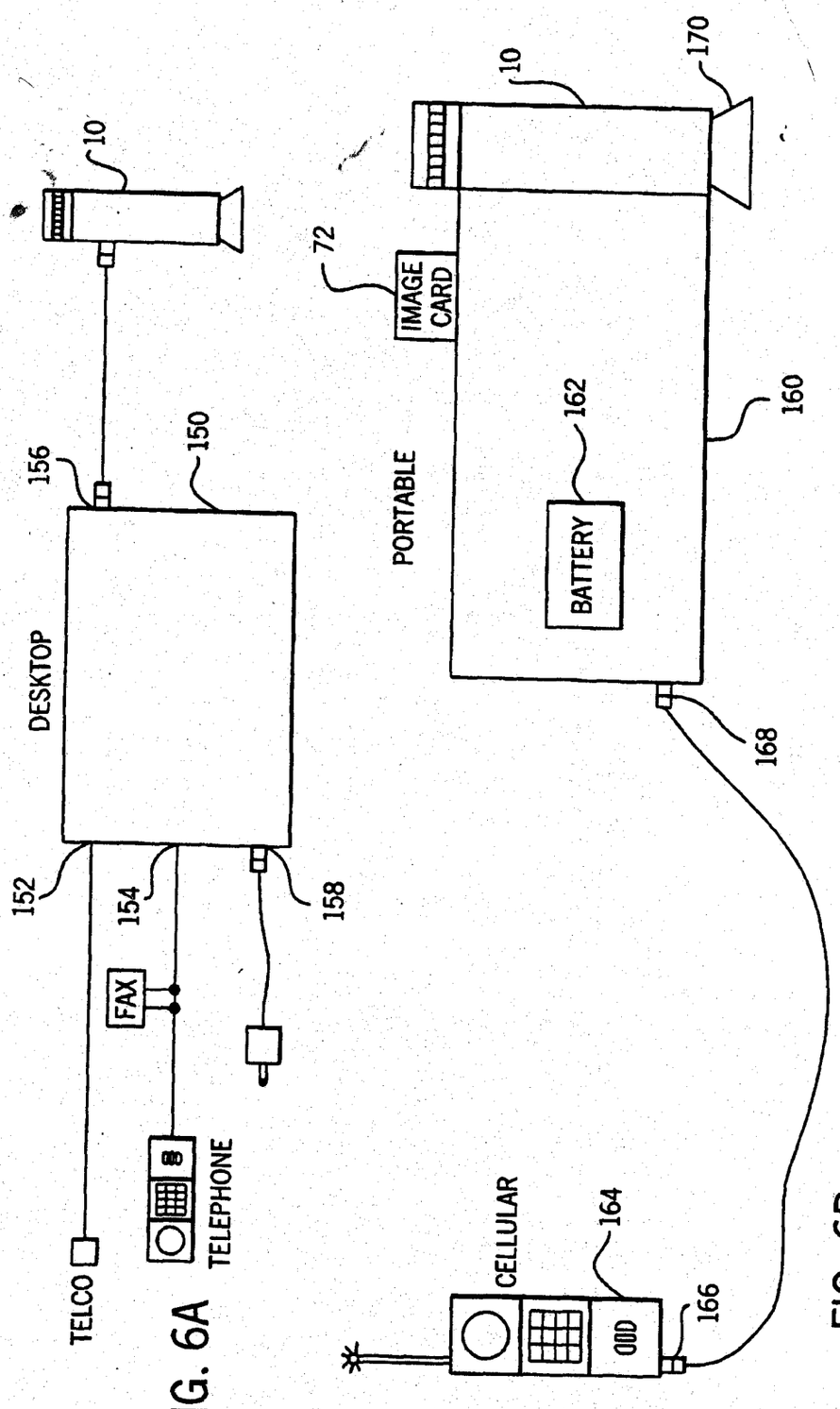

FIG. 6A

FIG. 6B

Kyocera Ex. 1012
p. 88

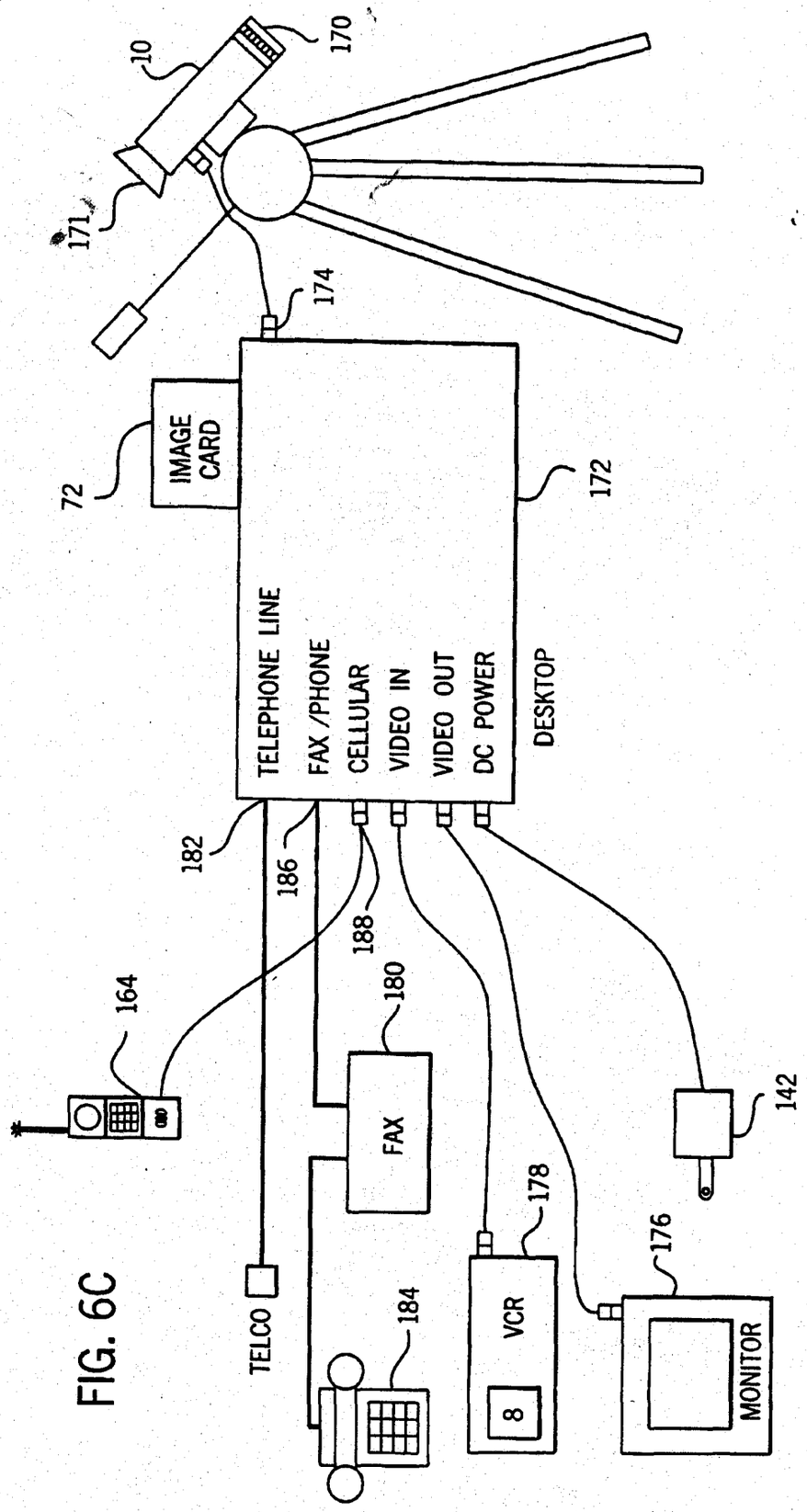
10
170
171
174
IMAGE CARD
72
172
TELEPHONE LINE
FAX /PHONE
CELLULAR
VIDEO IN
VIDEO OUT
DC POWER
DESKTOP
182
186
188
164
180
FAX
142
178
176
TELCO
184
VCR
8
MONITOR

FIG. 6C

FIG. 7A

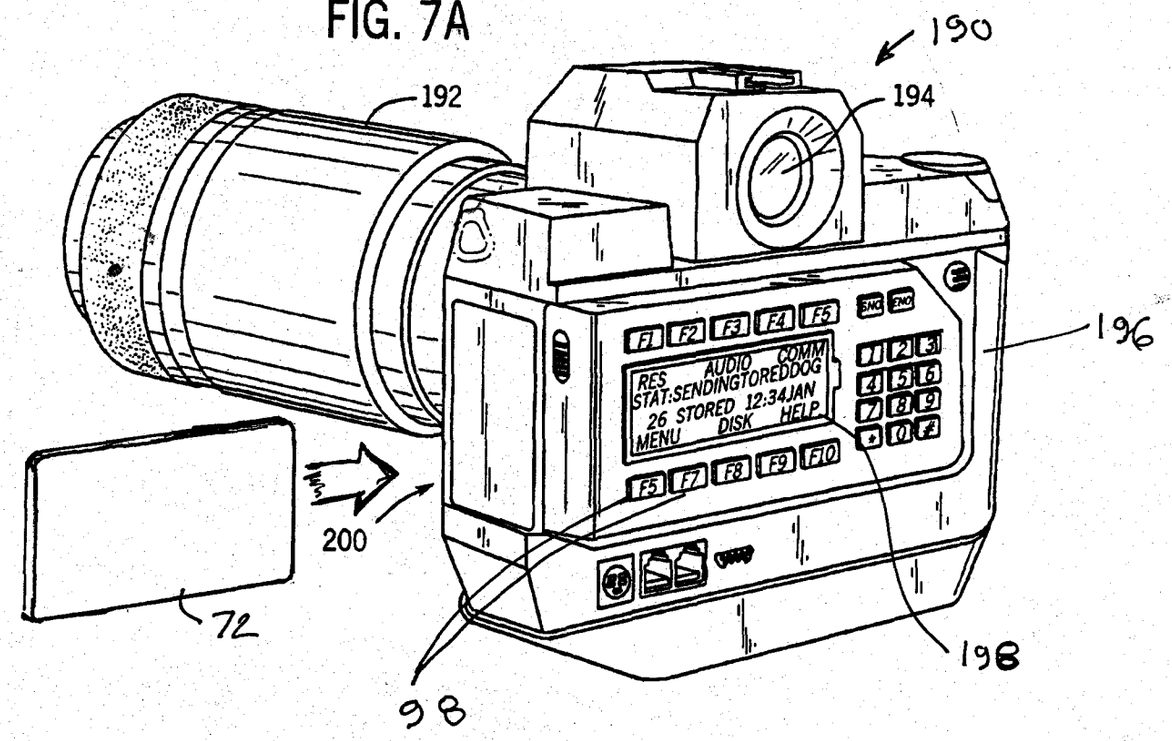
190
192
194
196
200
72
98
198
F1 F2 F3 F4 F5
F5 F7 F8 F9 F10
RES AUDIO COMM
STAT:SENDINGTOREDDOG
26 STORED 12:34JAN
MENU DISK HELP

FIG. 7B

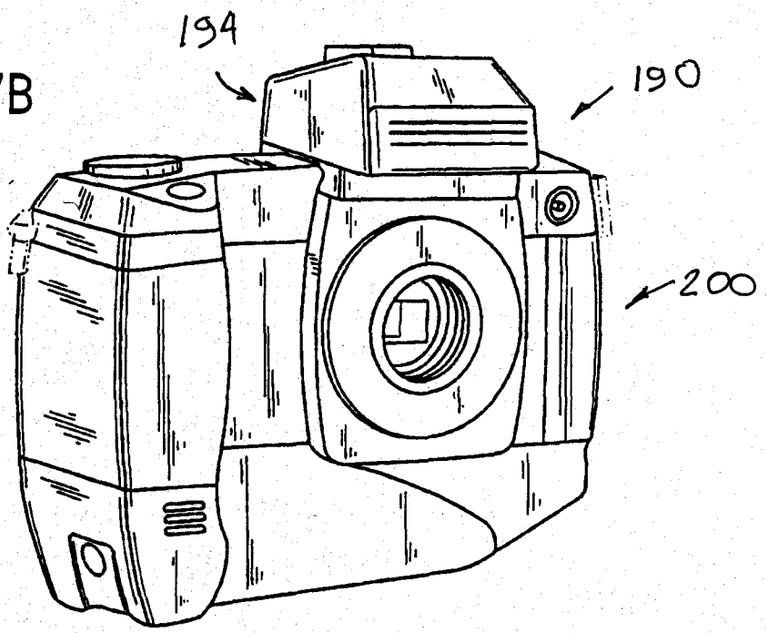
194
190
200

UNITED STATES DEPARTMENT OF COMMERCE
Patent and Trademark Office
Address: COMMISSIONER OF PATENTS AND TRADEMARKS
Washington, D.C. 20231

APPLICATION NUMBER	FILING/RECEIPT DATE	FIRST NAMED APPLICANT	ATTORNEY DOCKET NO./TITLE
09/056,073	04/12/98	MONROE	R 58950.12

022/0413

BRACEWELL & PATTERSON
SOUTH TOWER PENNZOIL PLACE
711 LOUISIANA STREET SUITE 2900
HOUSTON TX 77002-2781

NOT ASSIGNED

1722

DATE MAILED: 04/13/98

NOTICE TO FILE MISSING PARTS OF APPLICATION
Filing Date Granted

An Application Number and Filing Date have been assigned to this application. The items indicated below, however, are missing. Applicant is given TWO MONTHS FROM THE DATE OF THIS NOTICE within which to file all required items and pay fees required below to avoid abandonment. Extensions of time may be obtained by filing a petition accompanied by the extension fee under the provisions of 37 CFR 1.136(a). **If any of items 1 or 3 through 5 are indicated as missing, the SURCHARGE set forth in 37 CFR 1.16(e) of ☐ $65.00 for a small entity in compliance with 37 CFR 1.27, or ☑ $130.00 for a non-small entity, must also be timely submitted in reply to this NOTICE to avoid abandonment.**

If all required items on this form are filed within the period set above, the total amount owed by applicant as a ☐ small entity (statement filed) ☐ non-small entity is $ 130.

☐ 1. The statutory basic filing fee is:
- ☐ missing.
- ☐ insufficient.

Applicant must submit $ _____ to complete the basic filing fee and/or file a small entity statement claiming such status (37 CFR 1.27).

☐ 2. Additional claim fees of $_____, including any multiple dependent claim fees, are required.

$_____ for _____ independent claims over 3.

$_____ for _____ dependent claims over 20.

$_____ for multiple dependent claim surcharge.

Applicant must either submit the additional claim fees or cancel additional claims for which fees are due.

☑ 3. The oath or declaration:
- ☑ is missing or unexecuted.
- ☐ does not cover the newly submitted items.
- ☐ does not identify the application to which it applies.
- ☐ does not include the city and state or foreign country of applicant's residence.

An oath or declaration in compliance with 37 CFR 1. 63, including residence information and identifying the application by the above Application Number and Filing Date is required.

☐ 4. The signature(s) to the oath or declaration is/are by a person other than inventor or person qualified under 37 CFR 1.42, 1.43 or 1.47.
A properly signed oath or declaration in compliance with 37 CFR 1.63, identifying the application by the above Application Number and Filing Date, is required.

☐ 5. The signature of the following joint inventor(s) is missing from the oath or declaration:

_____

An oath or declaration in compliance with 37 CFR 1.63 listing the names of all inventors and signed by the omitted inventor(s), identifying this application by the above Application Number and Filing Date, is required.

☐ 6. A $50.00 processing fee is required since your check was returned without payment (37 CFR 1.21(m)).

☐ 7. Your filing receipt was mailed in error because your check was returned without payment.

☐ 8. The application does not comply with the Sequence Rules.
See attached "Notice to Comply with Sequence Rules 37 CFR 1.821-1.825."

☐ 9. OTHER: _____

Direct the reply and any questions about this notice to "Attention: Box Missing Parts."

A copy of this notice MUST be returned with the reply.

Customer Service Center
Initial Patent Examination Division (703) 308-1202

PART 3 - OFFICE COPY

FORM PTO-1533 (REV.9-97)

UNITED STATES DEPARTMENT OF COMMERCE
Patent and Trademark Office
Address: COMMISSIONER OF PATENTS AND TRADEMARKS
Washington, D.C. 20231

APPLICATION NUMBER	FILING/RECEIPT DATE	FIRST NAMED APPLICANT	ATTORNEY DOCKET NO./TITLE
09/006,073	01/12/98	MONROE	D 58959.12

0242/0806

BRACEWELL & PATTERSON
SOUTH TOWER PENNZOIL PLACE
711 LOUISANA STREET SUITE 2900
HOUSTON TX 77002-2781

NOT ASSIGNED

2722

DATE MAILED: 08/06/98

NOTICE TO FILE CORRECTED APPLICATION PAPERS
Filing Date Granted

This application has been accorded an Application Number and Filing Date. The application, however, is informal since it does not comply with the regulations for the reason(s) indicated below. Applicant is given TWO MONTHS FROM THE DATE OF THIS NOTICE within which to correct the informalities indicated below.

The required item(s) identified below must be timely submitted to avoid abandonment:

☐ 1. An Abstract, commencing on a separate sheet *(37 CFR 1.72(b))*.

☐ 2. The Claim(s) commencing on a separate sheet *(37 CFR 1.75(h))*.

☐ 3. A substitute specification in compliance with 37 CFR 1.52 because:
- ☐ All sheets must be the same size and either A4 (21 cm x 29.7 cm) or 8-1/2" x 11".
- ☐ Papers are not flexible, strong, smooth, non-shiny, durable, and white.
- ☐ Papers are not typewritten or mechanically printed in permanent dark ink on one side.
- ☐ Papers contain hand lettering.
- ☐ Papers contain improper margins. *Each sheet must have a left margin of at least 2.5 cm (1") and top, bottom and right margins of at least 2.0 cm (3/4").*
- ☐ Line spacing on the sheets is not 1-1/2 or double-spaced.
- ☐ The pages of specification including the abstract and claims are not consecutively numbered starting with the number "1."
- ☐ The pages of specification do not contain page numbers centrally located within the top or, preferably, bottom margin.

☑ 4. Substitute drawings in compliance with 37 CFR 1.84 because:
- ☐ The drawings or copy of drawings are not suitable for electronic reproduction.
- ☑ All drawing sheets must be the same size and either A4 (21cm x 29.7 cm) or 8-1/2" x 11". FIG- 8A-9
- ☐ Each sheet must include a top and left margin of at least 2.5 cm (1"), a right margin of at least 1.5 cm (9/16") and a bottom margin of at least 1.0 cm (3/8").

☐ 5. Page(s)_____ are not of sufficient clarity, contrast and quality for electronic reproduction. *New typewritten or mechanically printed pages of sufficient clarity, contrast and quality for electronic reproduction, together with a statement that the new pages contain the same material as those on deposit are required.*

☐ 6. A new oath or declaration in compliance with 37 CFR 1.63 setting forth the residence (city and state or foreign country) of each applicant (or legal representative under 37 CFR 1.42 or 1.43 of each applicant).

☐ 7. An English translation of the non-English language application, the $130.00 fee set forth in 37 CFR 1.17(k), unless previously submitted, and a statement that the translation is accurate *(37 CFR 1.52(d))*.

☐ 8. OTHER:_____

Direct the reply and any questions about this notice to "Attention: Box Missing Parts."

A copy of this notice MUST be returned with the reply.

D Martin 7-4

Customer Service Center
Initial Patent Examination Division (703) 308-1202

FORM PTO-1660 (REV.9-97) **PART 3 - OFFICE COPY** *U.S. GPO: 1997-434-203/60163

OIPE JC49 JUL 07 1998 PATENT & TRADEMARK OFFICE
OIPE JC49 JUL 08 1998 PATENT & TRADEMARK OFFICE
OIPE JC49 JUL 08 1998 PATENT & TRADEMARK OFFICE

SECTOR

PATENT

IN THE UNITED STATES PATENT AND TRADEMARK OFFICE

Application of)
)
DAVID A. MONROE)
)
Serial No.: 09/006,073)
)
Filed: January 12, 1998)
)
)
APPARATUS FOR CAPTURING,)
CONVERTING AND TRANSMITTING)
A VISUAL IMAGE SIGNAL VIA A)
DIGITAL TRANSMISSION DEVICE)

CERTIFICATE OF EXPRESS MAIL

I hereby certify that this correspondence is being deposited with the United States Postal Service as Express Mail addressed to: COMMISSIONER OF PATENTS AND TRADEMARKS, Washington, D.C. 20231, this 8th day of July, 1998. The Express Mail No. is EL080487139US.

Judy Kruger
Judy Kruger

#3

SUBMISSION OF MISSING PARTS

Commissioner of Patents and Trademarks
Box: APPLICATION BRANCH
Washington, D.C. 20231

Dear Sir:

Responsive to the Notice of Missing Parts dated April 13, 1998, (copy enclosed) enclosed is the Declaration for the above-identified application. Also enclosed is a check covering the $130.00 fee for the surcharge. A one-month extension of time is also enclosed along with the fee of $110.00. The Commissioner is authorized to charge Deposit Account 50-0259 for any deficiencies in this filing.

Respectfully submitted,

BRACEWELL & PATTERSON, L.L.P.

7/8/98
DATE

BY: Robert C. Curfiss
Robert C. Curfiss
Reg. No. 26.540

BRACEWELL & PATTERSON, L.L.P.
South Tower Pennzoil Place
711 Louisiana Street, Suite 2900
Houston, Texas 77002-2781
(713) 221-1430

ATTORNEY DOCKET NO. 058959.007010.0012

07/14/1998 DNASH1 00000068 09006073
02 FC:115 110.00 OP

KRUGJ\058959\007010
HOUSTON\867058.1
7/8/98--2:35 pm

Kyocera Ex. 1012
p. 93

OIPE JC49 JUL 07 1998 PATENT & TRADEMARK OFFICE
MAIL DATE CANCELLED
OIPE JC49 JUL 08 1998 PATENT & TRADEMARK OFFICE
OIPE JC49 JUL 08 1998 PATENT & TRADEMARK OFFICE

Docket No. 058959.007010.012

DECLARATION FOR PATENT APPLICATION

As a below named inventor, I hereby declare that:

My residence, post office address and citizenship are as stated below next to my name.

I believe that I am the original, first and sole inventor of the subject matter which is claimed and for which a patent is sought on the invention entitled APPARATUS FOR CAPTURING, CONVERTING AND TRANSMITTING A VISUAL IMAGE SIGNAL VIA A DIGITAL TRANSMISSION SYSTEM

the specification of which: (check one)

[ ] is attached hereto;

[x] was filed on 01/12/98 as Application Serial No. 09/006073

I hereby state that I have reviewed and understand the contents of the above-identified specification, including the claims, as amended by any amendment(s) referred to above.

I acknowledge the duty to disclose information which is material to the examination of this application in accordance with Title 37, Code of Federal Regulation, §1.56(a).

I hereby claim foreign priority benefits under Title 35, United States Code, §119 of any foreign application(s) for patent or inventor's certificate listed below and have also identified below any foreign application for patent or inventor's certificate having a filing date before that of the application on which priority is claimed:

PRIOR FOREIGN APPLICATION(S)			PRIORITY CLAIMED	
(Number)	(Country)	(Day/Month/Year Filed)	[ ] Yes	[] No
(Number)	(Country)	(Day/Month/Year Filed)	[] Yes	[] No
(Number)	(Country)	(Day/Month/Year Filed)	[] Yes	[] No

I hereby claim the benefit under Title 35, United States Code, §120 of any United States application(s) listed below and, insofar as the subject matter of each of the claims of this application is not disclosed in the prior United States application in the manner provided by the first paragraph of Title 35, United States Code, §112, I acknowledge the duty to disclose material information as defined in Title 37, Code of Federal Regulations, §1.56(a) which occurred between the filing date of the prior application and the national or PCT international filing date of this application:

(Application Serial No.)	(Filing Date)	(Status - Patented, Pending, or Abandoned)
(Application Serial No.)	(Filing Date)	(Status - Patented, Pending, or Abandoned)
(Application Serial No.)	(Filing Date)	(Status - Patented, Pending, or Abandoned)

I hereby appoint the following attorney(s) and/or agents, to prosecute this application and transact all business in the Patent and Trademark Office connected therewith:

Robert C. Curfiss Reg. No. 26,540
Mark A. Tidwell Reg. No. 37,456

Address all Telephone Calls to: ROBERT C. CURFISS
(713) 221-1430

Address all correspondence to BRACEWELL & PATTERSON, L.L.P.
SOUTH TOWER PENNZOIL PLACE
711 Louisiana Street, Suite 2900
Houston, Texas 77002-2781

I hereby declare that all statements made herein of my own knowledge are true and that all statements made on information and belief are believed to be true; and further that these statements were made with the knowledge that willful false statements and the like so made are punishable by fine or imprisonment, or both, under Section 1001 of Title

18 of the United States Code and that such willful false statements may jeopardize the validity of the application or any patent issued thereon.

FULL NAME OF FIRST OR SOLE INVENTOR DAVID A. MONROE

INVENTOR'S SIGNATURE _____ DATE 7/3/1998

Citizenship UNITED STATES

Address P. O. BOX 780907, SAN ANTONIO, TEXAS 78278-0907

OIPE JC49 JUL 06 1998 PATENT & TRADEMARK OFFICE
MAIL DATE CANCELLED
OIPE JC49 JUL 08 1998 PATENT & TRADEMARK OFFICE
OIPE JC49 JUL 08 1998 PATENT & TRADEMARK OFFICE

UNITED STATES DEPARTMENT OF COMMERCE
Patent and Trademark Office
Address: COMMISSIONER OF PATENTS AND TRADEMARKS
Washington, D.C. 20231

APPLICATION NUMBER	FILING/RECEIPT DATE	FIRST NAMED APPLICANT	ATTORNEY DOCKET NO./TITLE
09/109,077	01/12/98	MONROE	D 58959.12

0222/0413

BRACEWELL PATTERSON
SOUTH TOWER PENNZOIL PLACE
711 LOUISANA STREET SUITE 2900
HOUSTON TX 77002-2781

NOT ASSIGNED

2722

DATE MAILED: 04/13/98

NOTICE TO FILE MISSING PARTS OF APPLICATION
Filing Date Granted

An Application Number and Filing Date have been assigned to this application. The items indicated below, however, are missing. Applicant is given TWO MONTHS FROM THE DATE OF THIS NOTICE within which to file all required items and pay fees required below to avoid abandonment. Extensions of time may be obtained by filing a petition accompanied by the extension fee under the provisions of 37 CFR 1.136(a). **If any of items 1 or 3 through 5 are indicated as missing, the SURCHARGE set forth in 37 CFR 1.16(e) of ☐ $65.00 for a small entity in compliance with 37 CFR 1.27, or ☐ $130.00 for a non-small entity, must also be timely submitted in reply to this NOTICE to avoid abandonment.**

If all required items on this form are filed within the period set above, the total amount owed by applicant as a ☐ small entity (statement filed) ☐ non-small entity is $ 130.

☐ 1. The statutory basic filing fee is:
- ☐ missing.
- ☐ insufficient.

Applicant must submit $_____ to complete the basic filing fee and/or file a small entity statement claiming such status (37 CFR 1.27).

☐ 2. Additional claim fees of $_____, including any multiple dependent claim fees, are required.

$_____ for _____ independent claims over 3.

$_____ for _____ dependent claims over 20.

$_____ for multiple dependent claim surcharge.

Applicant must either submit the additional claim fees or cancel additional claims for which fees are due.

☐ 3. The oath or declaration:
- ☑ is missing or unexecuted.
- ☐ does not cover the newly submitted items.
- ☐ does not identify the application to which it applies.
- ☐ does not include the city and state or foreign country of applicant's residence.

An oath or declaration in compliance with 37 CFR 1. 63, including residence information and identifying the application by the above Application Number and Filing Date is required.

☐ 4. The signature(s) to the oath or declaration is/are by a person other than inventor or person qualified under 37 CFR 1.42, 1.43 or 1.47.
A properly signed oath or declaration in compliance with 37 CFR 1.63, identifying the application by the above Application Number and Filing Date, is required.

☐ 5. The signature of the following joint inventor(s) is missing from the oath or declaration:

_____

An oath or declaration in compliance with 37 CFR 1.63 listing the names of all inventors and signed by the omitted inventor(s), identifying this application by the above Application Number and Filing Date, is required.

☐ 6. A $50.00 processing fee is required since your check was returned without payment (37 CFR 1.21(m)).

☐ 7. Your filing receipt was mailed in error because your check was returned without payment.

☐ 8. The application does not comply with the Sequence Rules.
See attached "Notice to Comply with Sequence Rules 37 CFR 1.821-1.825."

07/14/1998 DNGUYEN 00000006 09010977
01 FC:105 130.00 OP

☐ 9. OTHER: _____

Direct the reply and any questions about this notice to "Attention: Box Missing Parts."

A copy of this notice MUST be returned with the reply.

Customer Service Center
Initial Patent Examination Division (703) 308-1202

PART 2 - COPY TO BE RETURNED WITH RESPONSE

FORM PTO-1533 (REV.9-97)

OIPE JC49 JUL 08 1998 PATENT & TRADEMARK OFFICE
OIPE JC49 JUL 07 1998 PATENT & TRADEMARK OFFICE
MAIL DATE CANCELLED
OIPE JC49 JUL 07 1998 PATENT & TRADEMARK OFFICE

PATENT

IN THE UNITED STATES PATENT AND TRADEMARK OFFICE

#4

Application of:)
)
DAVID A. MONROE)
)
Serial No. 09/005,931)
)
Filed: January 12, 1998)
)
Group Art Unit:)
)
Examiner:)
)
APPARATUS FOR CAPTURING,)
CONVERTING AND TRANSMITTING)
A VISUAL IMAGE SIGNAL VIA A)
DIGITAL TRANSMISSION SYSTEM)

CERTIFICATE OF MAILING

I hereby certify that this correspondence is being deposited with the United States Postal Service as Express Mail, Express Mail No. EL080487139US, in an Express Mail envelope addressed to: COMMISSIONER OF PATENTS AND TRADEMARKS, Washington, D.C. 20231, this 8th day of July, 1998.

Judy Kruger
Judy Kruger

REQUEST FOR ONE-MONTH EXTENSION OF TIME

HONORABLE COMMISSIONER
OF PATENTS AND TRADEMARKS
Box: Fee
Washington, D.C. 20231

Sir:

Responsive to the Notice of Missing Parts dated April 13, 1998, a one-month extension of time is hereby requested in the above-identified application. The requisite extension fee of $110.00 is attached.

The Commissioner is hereby authorized to charge any additional fees in this application under 35 C.F.R. §1.16 or §1.17 to **Deposit Account No. 50-0259**. An additional copy of this Request for Extension of Time is attached.

Respectfully submitted,

Robert C. Curfiss
Robert C. Curfiss
Registration No. 26,540

BRACEWELL & PATTERSON, L.L.P.
711 Louisiana, Suite 2900
Houston, Texas 77002
(713) 221-1430
Attorney Docket No. 058959.007010.0012

OIPE
MAY 26 1998
JC34
PATENT & TRADEMARK OFFICE

GAU 2722
not assigned
cl 55 S

PATENT

IN THE UNITED STATES PATENT AND TRADEMARK OFFICE

Application of

DAVID A. MONROE

Serial No.: 09/006,073

Filed: JANUARY 12, 1998

APPARATUS FOR CAPTURING, CONVERTING AND TRANSMITTING A VISUAL IMAGE SIGNAL VIA A DIGITAL TRANSMISSION SYSTEM

CERTIFICATE OF EXPRESS MAIL

I hereby certify that this correspondence is being deposited with the United States Postal Service as Express Mail addressed to: COMMISSIONER OF PATENTS AND TRADEMARKS, Washington, D.C. 20231, this 26th day of MAY, 1998. The Express Mail No. is EL080486972US.

Judy Kruger
Judy Kruger

INFORMATION DISCLOSURE STATEMENT

RECEIVED
JUN 01 1998
GROUP 2100

HONORABLE COMMISSIONER
OF PATENTS AND TRADEMARKS
Washington, D.C. 20231

Sir:

Applicant desires to bring to the attention of the Examiner the following U.S. Patents listed on the attached form PTO 1449. A copy of each of the patents is enclosed in compliance with Rules 97 and 98 of the Rules of Practice.

RECEIVED
98 JUN -3 PM 12:26
GROUP 2700

U.S. PATENT NO.	ISSUE DATE	INVENTOR
2,642,492	JUNE, 1953	HAMMOND, JR.
3,251,937	MAY, 1966	HOAG
3,751,159	AUGUST, 1973	FISHER
3,864,514	FEBRUARY, 1975	LEMELSON
4,074,324	FEBRUARY, 1978	BARRETT
4,530,014	JULY, 1985	D'ALAYER DE COSTEMORE D'ARC
4,652,926	MARCH, 1987	WITHERS ET AL
4,884,132	NOVEMBER, 1989	MORRIS ET AL
4,937,676	JUNE, 1990	FINELLI ET AL
4,942,477	JULY, 1990	NAKAMURA
5,032,911	JULY, 1991	TAKIMOTO

5,047,870	SEPTEMBER, 1991	FILO
5,193,012	MARCH, 1993	SCHMIDT
5,235,432	AUGUST, 1993	CREEDON ET AL

Respectfully submitted,

BRACEWELL & PATTERSON, L.L.P.

5/26/1998
DATE

BY: Robert C. Curfiss
ROBERT C. CURFISS
Reg. No. 26,540

BRACEWELL & PATTERSON, L.L.P.
South Tower Pennzoil Place
711 Louisiana Street, Suite 2900
Houston, Texas 77002-2781
(713) 221-1430
ATTORNEY DOCKET NO. 058959.007010.0012

OIPE
MAY 26 1998
PATENT & TRADEMARK OFFICE

Form PTO-1449 U.S. Department of Commerce Patent and Trademark Office	Atty Docket No. 058959.007010.0012	Serial No. 09/006,073
INFORMATION DISCLOSURE STATEMENT BY APPLICANT (Use several sheets if necessary)	Applicant DAVID A. MONROE	
	Filing Date January 12, 1998	Group Art Unit 2722

U.S. PATENT DOCUMENTS

*EXAMINER INITIAL		DOCUMENT NUMBER	DATE	NAME	CLASS	SUBCLASS	FILING DATE IF APPROPRIATE
JP	A	2 6 4 2 4 9 2	6/1953	HAMMOND, JR.			
JP	B	3 2 5 1 9 3 7	5/1966	HOAG			
JP	C	3 7 5 1 1 5 9	8/1973	FISHER			
JP	D	3 8 6 4 5 1 4	2/1975	LEMELSON			
JP	E	4 0 7 4 3 2 4	2/1978	BARRETT			
JP	F	4 5 3 0 0 1 4	7/1985	D'ALAYER DE COSTEMORE D'ARC			
JP	G	4 6 5 2 9 2 6	3/1987	WITHERS ET AL			
JP	H	4 8 8 4 1 3 2	11/1989	MORRIS ET AL			
JP	I	4 9 3 7 6 7 6	6/1990	FINELLI ET AL			

RECEIVED
JUN 01 1998
GROUP 2100

FOREIGN PATENT DOCUMENTS

		DOCUMENT NUMBER	DATE	COUNTRY	CLASS	SUBCLASS	TRANSLATION YES	TRANSLATION NO

OTHER PREFERENCES (Including Author, Title, Date, Pertinent Pages, Etc.)

RECEIVED
98 JUN -3 PM 2:26
GROUP 2700

EXAMINER Joseph R Pokrzywa	DATE CONSIDERED 11/15/99

*Examiner: Initial if reference considered, whether or not citation is in conformance with MPEP 609; Draw line through citation if not in conformance and not considered. Include copy of this form with next communication to client.

KRUGJ\058959\007010
HOUSTON\850301.1
5/26/98--9:30 am

OIPE
MAY 26 1998
PATENT & TRADEMARK OFFICE

Form PTO-1449 U.S. Department of Commerce Patent and Trademark Office	Atty Docket No. 058959.007010.0012	Serial No. 09/006,073
INFORMATION DISCLOSURE STATEMENT BY APPLICANT **(Use several sheets if necessary)**	Applicant DAVID A. MONROE	
	Filing Date January 12, 1998	Group Art Unit 2722

U.S. PATENT DOCUMENTS

*EXAMINER INITIAL		DOCUMENT NUMBER	DATE	NAME	CLASS	SUBCLASS	FILING DATE IF APPROPRIATE
JP	J	4 9 4 2 4 7 7	7/1991	NAKAMURA			
JP	K	5 0 3 2 9 1 1	7/1991	TAKIMOTO			
JP	L	5 0 4 7 8 7 0	9/1991	FILO			
JP	M	5 1 9 3 0 1 2	3/1993	SCHMIDT			
JP	N	5 2 3 5 4 3 2	8/1993	CREEDON ET AL			

RECEIVED
JUN 01 1998
GROUP 2100

FOREIGN PATENT DOCUMENTS

		DOCUMENT NUMBER	DATE	COUNTRY	CLASS	SUBCLASS	TRANSLATION YES	TRANSLATION NO

OTHER PREFERENCES (Including Author, Title, Date, Pertinent Pages, Etc.)

RECEIVED
98 JUN -3 PM 2:26
GROUP 2700

EXAMINER	DATE CONSIDERED
Joseph R Rohrer	11/15/99

*Examiner: Initial if reference considered, whether or not citation is in conformance with MPEP 609; Draw line through citation if not in conformance and not considered. Include copy of this form with next communication to client.

KRUGJ\058959\007010
HOUSTON\850301.2
5/26/98--9:29 am

UNITED STATES DEPARTMENT OF COMMERCE
Patent and Trademark Office
Address: COMMISSIONER OF PATENTS AND TRADEMARKS
Washington, D.C. 20231

APPLICATION NO.	FILING DATE	FIRST NAMED INVENTOR	ATTORNEY DOCKET NO.
09/006,073	01/12/98	MONROE	D 58959.12

LM31/1207

BRACEWELL & PATTERSON
SOUTH TOWER PENNZOIL PLACE
711 LOUISANA STREET SUITE 2900
HOUSTON TX 77002-2781

EXAMINER	
POKRZYWA, J	
ART UNIT	**PAPER NUMBER**
2722	6

DATE MAILED: 12/07/99

Please find below and/or attached an Office communication concerning this application or proceeding.

Commissioner of Patents and Trademarks

PTO-90C (Rev. 2/95) 1- File Copy

Office Action Summary

Application No.	Applicant(s)
09/006,073	Monroe, David A.
Examiner	**Group Art Unit**
Joseph Pokrzywa	2722

☐ Responsive to communication(s) filed on _____.

☐ This action is **FINAL.**

☐ Since this application is in condition for allowance except for formal matters, **prosecution as to the merits is closed** in accordance with the practice under *Ex parte Quayle*, 1935 C.D. 11; 453 O.G. 213.

A shortened statutory period for response to this action is set to expire 3 month(s), or thirty days, whichever is longer, from the mailing date of this communication. Failure to respond within the period for response will cause the application to become abandoned. (35 U.S.C. § 133). Extensions of time may be obtained under the provisions of 37 CFR 1.136(a).

Disposition of Claims

☒ Claim(s) *1-266* is/are pending in the application.

Of the above, claim(s) *29-180, 182-189, and 191-266* is/are withdrawn from consideration.

☐ Claim(s) _____ is/are allowed.

☒ Claim(s) *1-28, 181, and 190* is/are rejected.

☐ Claim(s) _____ is/are objected to.

☐ Claims _____ are subject to restriction or election requirement.

Application Papers

☒ See the attached Notice of Draftsperson's Patent Drawing Review, PTO-948.

☒ The drawing(s) filed on *Jan 12, 1998* is/are objected to by the Examiner.

☐ The proposed drawing correction, filed on _____ is ☐approved ☐disapproved.

☒ The specification is objected to by the Examiner.

☐ The oath or declaration is objected to by the Examiner.

Priority under 35 U.S.C. § 119

☐ Acknowledgement is made of a claim for foreign priority under 35 U.S.C. § 119(a)-(d).

☐ All ☐ Some* ☐ None of the CERTIFIED copies of the priority documents have been

☐ received.

☐ received in Application No. (Series Code/Serial Number) _____.

☐ received in this national stage application from the International Bureau (PCT Rule 17.2(a)).

*Certified copies not received: _____.

☐ Acknowledgement is made of a claim for domestic priority under 35 U.S.C. § 119(e).

Attachment(s)

☒ Notice of References Cited, PTO-892

☒ Information Disclosure Statement(s), PTO-1449, Paper No(s). 5

☐ Interview Summary, PTO-413

☒ Notice of Draftsperson's Patent Drawing Review, PTO-948

☐ Notice of Informal Patent Application, PTO-152

--- SEE OFFICE ACTION ON THE FOLLOWING PAGES ---

Kyocera Ex. 1012
p. 104

DETAILED ACTION

Election/Restriction

1. Restriction to one of the following inventions is required under 35 U.S.C. 121:

I. **Claims 1 through 28, 181, and 190** are drawn to a system of capturing an image and transmitting it to a remote receiving station, wherein the system includes a subprocessor for generating a Group-III facsimile compatible signal, classified in class 358, subclass 400.

II. **Claims 29 through 69, 144 through 167, and 263 through 266** are drawn to a system of capturing an image and transmitting it to a remote receiving station, wherein the system includes an image capture device, a processor, and a transmitter, wherein the components can be modular, the components can be housed in one unit, or the system can be a portable, handheld system, classified in class 348, subclass 373.

III. **Claims 70 through 111** are drawn to a system of capturing an image and transmitting it to a remote receiving station through a wireless transmission, classified in 348, subclass 723.

IV. **Claims 112 through 143** are drawn to image processing system which includes a trigger device for activating the system to initiate image capture, classified in class 348, subclass 152.

V. **Claims 168 through 180, 182 through 189** are drawn to a system of capturing an image and transmitting it to a remote receiving station, wherein the system includes an image capture device, a processor, a transmitter, and an audio capture device, classified in class 348, subclass 462.

VI. **Claims 191 through 229** are drawn to a system of capturing an image and transmitting it to a remote receiving station in any of a plurality of selected protocols, classified in class 379 subclass 100.12.

VII. **Claims 230 through 247** are drawn to a system of capturing an image and transmitting it to a remote receiving station, wherein the system includes an image capture device, a processor, a transmitter, and a self-contained power source, classified in class 348, subclass 372.

VIII. **Claims 248 through 252** are drawn to a method for capturing an analog signal and converting it to a digital signal for transmission over a telephone system, classified in class 358, subclass 472.

IX. **Claims 253 through 262** are drawn to a method for sampling visual images in a zone for a record of an incident, classified in class 348, subclass 143.

2. The inventions are distinct, each from the other because of the following reasons: Inventions I, II, III, IV, V, VI, VII, VIII, and IX are related as subcombinations disclosed as usable together in a single combination. The subcombinations are distinct from each other if they are shown to be separately usable.

In the instant case, invention I has separate utility such as a standard Group III facsimile device which reads a document and transmits the document to a destination in a Group-III format, while invention II has separate utility such as a video camera with modular attachments, while invention III has separate utility such as a television broadcast wherein a camera in a remote area captures an image and sends the image through a radio frequency, while invention IV has separate utility such as an intrusion detection device, with a motion detector, while invention V has separate utility such as a video telephone or a camera with a microphone, while invention VI has separate utility such as transmitting an image of a document through multiple networks using different protocols, while invention VII has separate utility such as a camera with a battery pack, while invention VIII has separate utility such as capturing an analog signal through a camera, converting the signal, and transmitting the signal over a telephone line, while invention IX has separate utility such as providing a surveillance system wherein visual images are sampled for a record of an incident. See MPEP § 806.05(d).

3. Because these inventions are distinct for the reasons given above and have acquired a separate status in the art as shown by their different classification, restriction for examination purposes as indicated is proper.

4. During a telephone conversation with Stephen F. Schlather on Monday, November 29, 1999 a provisional election was made without traverse to prosecute the invention of Group I, claims 1 through 28, 181, and 190. Affirmation of this election must be made by applicant in replying to this Office action. Claims 29 through 180, 182 through 189, and 191 through 266 are withdrawn from further consideration by the examiner, 37 CFR 1.142(b), as being drawn to a non-elected invention.

Information Disclosure Statement

5. The references listed in the Information Disclosure Statement submitted on 11/2/95 have been considered by the examiner (see attached PTO-1449).

Drawings

6. The drawings are objected to as failing to comply with 37 CFR 1.84(p)(4) because reference character "81" has been used to designate both the hardwired personal computer in Fig. 4 and the data multiplexer circuit in Fig. 5, and reference character "83" has been used to designate both the communications interface module in Fig. 4 and the sync signal in Fig. 5. Correction is required.

7. The drawings are objected to as failing to comply with 37 CFR 1.84(p)(5) because they do not include the following reference sign(s) mentioned in the description:

reference numeral "29", on page 10, line 11.

Correction is required.

8. The drawings are objected to because of the problems addressed in the attached PTO-948, and because of:

in Fig. 4, PC modem protocol box "66" should read "68" as read on page 12, lines 27 and 28.

Correction is required.

Specification

9. The disclosure is objected to because of the following informalities:

on page 11, line 13, PCMCIA card 50" should read PCMCIA card 72";

on page 18, line 20, "Fig. 8." should be removed;

on page 21, line 24, "ne imagery formats" should read "new imagery formats";

Appropriate correction is required.

Claim Objections

10. Applicant is advised that should **claim 12** be found allowable, **claim 181** will be rejected under 35 U.S.C. 101 as being a substantial duplicate thereof. When two claims in an application are duplicates or else are so close in content that they both cover the same thing, despite a slight difference in wording, it is proper after allowing one claim to reject the other as being a substantial duplicate of the allowed claim. See MPEP § 706.03(k).

11. Applicant is advised that should **claim 26** be found allowable, **claim 190** will be rejected under 35 U.S.C. 101 as being a substantial duplicate thereof. When two claims in an application are duplicates or else are so close in content that they both cover the same thing, despite a slight difference in wording, it is proper after allowing one claim to reject the other as being a substantial duplicate of the allowed claim. See MPEP § 706.03(k).

12. **Claims 25 and 27** are objected to because of the following informalities:

in ***claim 25***, line 2, "control apparatus any" should read "control apparatus controlling any";

in ***claim 27***, line 2, "plurality images" should read "plurality of images".

Appropriate correction is required.

Claim Rejections - 35 USC § 112

13. The following is a quotation of the second paragraph of 35 U.S.C. 112:

> The specification shall conclude with one or more claims particularly pointing out and distinctly claiming the subject matter which the applicant regards as his invention.

14. **Claims 1 through 28, 181, and 190** are rejected under 35 U.S.C. 112, second paragraph, as being indefinite for failing to particularly point out and distinctly claim the subject matter which applicant regards as the invention.

15. ***Claim 1*** recites the limitation "the digital signal" in line 8. There is insufficient antecedent basis for this limitation in the claim.

16. ***Claim 3*** recites the limitation "said memory" in line 1. There is insufficient antecedent basis for this limitation in the claim.

17. ***Claim 13*** recites the limitation "the camera" in line 2. There is insufficient antecedent basis for this limitation in the claim.

Claim Rejections - 35 USC § 102

18. The following is a quotation of the appropriate paragraphs of 35 U.S.C. 102 that form the basis for the rejections under this section made in this Office action:

> A person shall be entitled to a patent unless --
>
> (b) the invention was patented or described in a printed publication in this or a foreign country or in public use or on sale in this country, more than one year prior to the date of application for patent in the United States.
>
> (e) the invention was described in a patent granted on an application for patent by another filed in the United States before the invention thereof by the applicant for patent, or on an international application by another who has fulfilled the requirements of paragraphs (1), (2), and (4) of section 371(c) of this title before the invention thereof by the applicant for patent.

19. **Claims 1, 2, 4, 12, 13, 16, 18, 20, 21, and 181** are rejected under 35 U.S.C. 102(b) as being anticipated by Ross (U.S. Patent Number 5,546,194).

Regarding ***claim 1***, Ross discloses a self-contained image processing system (see Fig. 1) for capturing a visual image and transmitting it to a remote receiving station, with the system comprising an image capture device (video camera 10, column 3, lines 4 through 5), a processor (control system 22 in Fig. 1, or CPU 44 in Fig. 2) for generating a data signal representing the image (column 3, lines 20 through 29, and column 3, line 63 through column 4, line 20), a communications device (Group III fax transmitter 20 in Fig. 1, and fax modem 50 in Fig. 2) adapted for transmitting the data signal to the remote receiving station (column 2, lines 15 through 29, wherein the remote receiving station is inherently included in the system), and a subprocessor (Group III formatter 18) for generating a Group-III facsimile compatible signal representing the data signal (column 3, lines 30 through 52).

Regarding ***claim 2***, Ross discloses the system discussed above in claim 1, and further teaches of a memory for receiving and storing the data signal (RAM 38, column 3, line 65 through column 4, line 11), and wherein the communications device is adapted for recalling the stored data signal from memory (column 4, lines 21 through 36).

Regarding ***claim 4***, Ross discloses the system discussed above in claim 1, and further teaches of the image capture device is an analog camera (video camera 10) for generating an analog image signal (column 3, lines 4 through 9), and there is further included an analog to digital converter for converting the analog image signal to a digital signal (A/D converter 34, column 4, lines 3 through 6).

Regarding ***claim 12***, Ross discloses the system discussed above in claim 1, and further teaches of the image capture device is an analog video camera for generating a video signal (column 3, lines 4 through 9). Further Ross teaches that the processor comprises a sync detector (sync separator 24, column 3, lines 53 through 62) and a video address generator (address multiplexer 43, column 4, lines 6 through 11) for synchronizing the digital signal with the analog signal for defining the beginning and end of the signal to define a still frame (column 3, lines 20 through 62), a random access memory (RAM 38) for receiving and storing the converted, synchronized signal frame-by-frame (column 4, lines 3 through 22), a processor routine for converting the signals stored in the memory to a protocol adapted for transmission (column 4, lines 22 through 36) to a remote, compatible protocol receiving station (inherently included), and

a communications device (FAX modem 50) for transmitting the signal in the proper protocol to the compatible receiving station (column 5, lines 7 through 16).

Regarding ***claim 13***, Ross discloses the system discussed above in claim 1, and further teaches of the system is of modular construction (seen in Fig. 2), and the image capture device (video camera 10), the processor (CPU 44), and the communications device (fax modem 50) are each independent, functional units (column 3, lines 5 through 8, and lines 53 through 56; column 4, lines 10 through 18; and column 4, lines 18 through 20) which may be coupled to one another for defining the assembled system (seen in Fig. 2).

Regarding ***claim 16***, Ross discloses the system discussed above in claim 2, and further teaches of the image data signal is stored in a raw video format (column 3, lines 20 through 22).

Regarding ***claim 18***, Ross discloses the system discussed above in claim 2, and further teaches of the image data signal is stored in a half-tone format (column 3, lines 30 through 40).

Regarding ***claim 20***, Ross discloses the system discussed above in claim 1, and further teaches of the remote receiving station is a gray-scale facsimile machine (column 3, lines 30 through 41, with the receiving station inherently receives the gray-scale image, thus being a gray-scale facsimile machine) and the image data signal is generated in a gray-scale format and protocol (column 3, lines 30 through 41).

Regarding ***claim 21***, Ross discloses the system discussed above in claim 1, and further teaches of the remote receiving station is a color facsimile machine (column 3, lines 20 through 41, with the receiving station inherently receives the color image, thus being a color facsimile

machine) and the image data signal is generated in a full color format and protocol (column 3, lines 20 through 41).

Regarding ***claim 181***, Ross discloses the system discussed above in claim 1, and further teaches of the image capture device is an analog video camera for generating a video signal (column 3, lines 4 through 9). Further Ross teaches that the processor comprises a sync detector (sync separator 24, column 3, lines 53 through 62) and a video address generator (address multiplexer 43, column 4, lines 6 through 11) for synchronizing the digital signal with the analog signal for defining the beginning and end of the signal to define a still frame (column 3, lines 20 through 62), a random access memory (RAM 38) for receiving and storing the converted, synchronized signal frame-by-frame (column 4, lines 3 through 22), a processor routine for converting the signals stored in the memory to a protocol adapted for transmission (column 4, lines 22 through 36) to a remote, compatible protocol receiving station (inherently included), and a communications device (FAX modem 50) for transmitting the signal in the proper protocol to the compatible receiving station (column 5, lines 7 through 16).

20. **Claims 1, 2, 6-11, 15, 17, 19, 21-23, and 27** are rejected under 35 U.S.C. 102(b) as being anticipated by Hassan *et al.* (U.S. Patent Number 5,550,646).

Regarding ***claim 1***, Hassan discloses a self-contained image processing system for capturing a visual image and transmitting it to a remote receiving station (column 1, lines 47 through 52), with the system comprising an image capture device (device 110 in Fig. 1), a

processor (microcontroller 205) for generating a data signal representing the image (column 3, lines 21 through 46), a communications device adapted for transmitting the data signal to the remote receiving station (fax modem 240, column 4, line 65 through column 5, line 9), and a subprocessor for generating a Group-III facsimile compatible signal representing the data signal (column 4, line 65 through column 5, line 9).

Regarding ***claim 2***, Hassan discloses the system discussed above in claim 1, and further teaches of a memory for receiving and storing the data signal (RAM 207, column 3, lines 47 through 50), and wherein the communications device is adapted for recalling the stored data signal from memory (column 5, lines 35 through 44, and column 5, lines 52 through 56).

Regarding ***claim 6***, Hassan discloses the system discussed above in claim 1, and further teaches of a integrated wireless telephone associated with the communications device (column 5, lines 7 through 9).

Regarding ***claim 7***, Hassan discloses the system discussed above in claim 1, and further teaches of a housing for housing all of the elements of the system in an integrated body (device 110, seen in Fig. 1).

Regarding ***claim 8***, Hassan discloses the system discussed above in claim 1, and further teaches of the image capture device is a digital camera (column 3, lines 30 through 50).

Regarding ***claim 9***, Hassan discloses the system discussed above in claim 2, and further teaches of including a view screen for viewing the captured and stored image (LCD display 215, column 4, lines 19 through 31).

Regarding ***claim 10***, Hassan discloses the system discussed above in claim 1, and further teaches of a facsimile receiving device associated locally with the system for providing a local printer for reproducing the captured image in hard copy (column 1, lines 52 through 63, column 2, line 64 through column 3, line 4, and column 6, lines 22 through 42).

Regarding ***claim 11***, Hassan discloses the system discussed above in claim 1, and further teaches of the processor is adapted for generating a signal in any of a plurality of selected protocols (column 6, line 62 through column 7, line 2, column 3, lines 5 through 20, and column 4, line 65 through column 65, line 9) and wherein the communications device is adapted for transmitting the signal in the proper protocol to a remote, compatible receiving station (column 2, lines 39 through 66).

Regarding ***claim 15***, Hassan discloses the system discussed above in claim 1, and further teaches of a data processor (keypad control circuit 213) for creating a text data signal associated with the image data signal (column 4, lines 1 through 18).

Regarding ***claim 17***, Hassan discloses the system discussed above in claim 2, and further teaches of the image data signal is stored in a compressed format (column 4, lines 43 through 48, and column 6, lines 43 through 50).

Regarding ***claim 19***, Hassan discloses the system discussed above in claim 1, and further teaches of the remote receiving station is a standard bi-level facsimile machine (remote receiving facsimile 140, column 2, lines 1 through 16, and lines 39 through 58) and the image data signal is

generated in a standard bi-level facsimile machine format and protocol (column 4, line 65 through column 5, line 22).

Regarding ***claim 21***, Hassan discloses the system discussed above in claim 1, and further teaches of the remote receiving station is a color facsimile machine (column 7, line 1) and the image data signal is generated in a full color format and protocol (column 6, line 62 through column 7, line 2).

Regarding ***claim 22***, Hassan discloses the system discussed above in claim 1, and further teaches of the remote receiving station is a digital device and the image data is digital (column 4, line 65 through column 5, line 9).

Regarding ***claim 23***, Hassan discloses the system discussed above in claim 1, and further teaches of a self-contained power source for powering the system (column 5, lines 23 through 25).

Regarding ***claim 27***, Hassan discloses the system discussed above in claim 1, and further teaches of the image capture device may be controlled to capture a plurality of images in controlled order (column 6, lines 43 through 62).

21. **Claims 1, 14, 24-26, and 190** are rejected under 35 U.S.C. 102(e) as being anticipated by Shibata *et al.* (U.S. Patent Number 5,689,300).

Regarding ***claim 1***, Shibata discloses a self-contained image processing system for capturing a visual image and transmitting it to a remote receiving station (column 2, line 22

through column 3, line 3), with the system comprising an image capture device (camera 1, column 6, lines 33 through 38), a processor for generating a data signal representing the image (control unit 26, column 5, line 64 through column 6, line 12, and column 6, lines 39 through 46), a communications device adapted for transmitting the data signal to the remote receiving station (G3-FAX modular jack 107 and G3-FAX interface 16, column 7, lines 10 through 25, and column 10, line 45 through column 11, line 21), and a subprocessor (multiplexor/demultiplexor 20) for generating a Group-III facsimile compatible signal representing the data signal (column 6, lines 13 through 24).

Regarding ***claim 14***, Shibata discloses the system discussed above in claim 1, and further teaches of an audio signal capture device (hands-free microphone 14, handset 15, or external microphone 108) adapted for capturing an audio signal in correlation with the captured video signal (column 6, lines 47 through 65).

Regarding ***claim 24***, Shibata discloses the system discussed above in claim 1, and further teaches of a control apparatus (control keyboard 2002, seen in Figs. 20A and 22) for remotely controlling operating functions of the image capture device (column 19, line 26 through column 12).

Regarding ***claim 25***, Shibata discloses the system discussed above in claim 24, and further teaches of the image capture device is a camera with a shuttered lens (column 15, lines 3 through 7, and camera 1, which outputs still pictures, column 8, lines 3 through 13) and where the control

apparatus controlling any combination of lens direction, iris, focus, and shutter speed (column 11, lines 50 through 63, and column 19, lines 1 through 50).

Regarding ***claim 26***, Shibata discloses the system discussed above in claim 1, and further teaches of an input device (control keyboard 2002, seen in Figs. 20A and 22) for controlling the processor configuration from a remote location (column 19, line 26 through column 12).

Regarding ***claim 190***, Shibata discloses the system discussed above in claim 1, and further teaches of an input device (control keyboard 2002, seen in Figs. 20A and 22) for controlling the processor configuration from a remote location (column 19, line 26 through column 12).

Claim Rejections - 35 USC § 103

22. The following is a quotation of 35 U.S.C. 103(a) which forms the basis for all obviousness rejections set forth in this Office action:

> (a) A patent may not be obtained though the invention is not identically disclosed or described as set forth in section 102 of this title, if the differences between the subject matter sought to be patented and the prior art are such that the subject matter as a whole would have been obvious at the time the invention was made to a person having ordinary skill in the art to which said subject matter pertains. Patentability shall not be negatived by the manner in which the invention was made.

23. **Claims 3 and 5** are rejected under 35 U.S.C. 103(a) as being unpatentable over Ross (U.S. Patent Number 5,546,194).

Regarding ***claim 3***, Ross discloses the system discussed above in claim 1, wherein the system is adapted for selectively charging and discharging a random access medium (RAM 38, column 4, lines 3 through 36). However, Ross fails to teach if the random access medium is

removable. Typically in the art, video cassettes and floppy disks are used are used for recording images, which are both inherently removable random access mediums. Therefore, it would have been obvious to a person of ordinary skill in the art at the time the invention was made to include a removable random access medium in Ross's system. Ross's system could easily be modified to include a removable random access medium since it is well known in the art to have a removable RAM.

Regarding ***claim 5***, Ross discloses the system discussed above in claim 3, and further teaches of the subprocessor comprising a gray scale bit map column 3, lines 36 and 37), a half tone converter (column 3, lines 36 through 41), and a binary bit map (column 3, lines 42 through 46).

24. **Claim 28** is rejected under 35 U.S.C. 103(a) as being unpatentable over Shibata *et al.* (U.S. Patent Number 5,689,300) in view of Hassan *et al.* (U.S. Patent Number 5,550,646).

Regarding ***claim 28***, Shibata discloses the system discussed above in claim 26, but fails to teach if the image capture device may be controlled to capture a plurality of images in a controlled order. Hassan discloses a system which teaches that an image capture device may be controlled to capture a plurality of images in controlled order (column 6, lines 43 through 62). Therefore, it would have been obvious to a person of ordinary skill in the art at the time the invention was made to include Hassan's teaching's in Shibata's system. Shibata's system could be modified to include Hassan's, as the systems have cumulative features.

Citation of Pertinent Prior Art

25. The prior art made of record and not relied upon is considered pertinent to applicant's disclosure:

Freeman (U.S. Patent Number 5,684,716) discloses a remote video transmission system which transmits an audio/visual signal through telephone lines, through cellular lines or through radio frequencies;

Parulski *et al.* (U.S. Patent Number 5,666,159) discloses an electronic camera system which can selectively transmit image data to selected receivers;

Bush *et al.* (U.S. Patent Number 5,539,452) discloses a system of transmitting audio and video information over a standard telephone line;

Galen *et al.* (U.S. Patent Number 5,515,176) discloses a system of transmitting image data to a remote receiver using Group III protocol.

Conclusion

26. Any inquiry concerning this communication or earlier communications from the examiner should be directed to Joe Pokrzywa whose telephone number is (703) 305-0146. The examiner can normally be reached on Monday through Friday from 8:00 a.m. to 4:30 p.m.

If attempts to reach the examiner by telephone are unsuccessful, the examiner's supervisor, Edward Coles, can be reached on (703) 305-4712. The fax phone number for this Group is (703) 308-6606.

Any inquiry of a general nature or relating to the status of this application or proceeding should be directed to the Group receptionist whose telephone number is (703) 305-3800/4700.

EDWARD L. COLES
SUPERVISORY PATENT EXAMINER
GROUP 2700

Joseph R. Pokrzywa

November 29, 1999

Notice of References Cited

Application No.	Applicant(s)		
09/006,073	Monroe, David A.		
Examiner	Group Art Unit	Page 1 of 1	
Joseph Pokrzywa	2722		

U.S. PATENT DOCUMENTS

		DOCUMENT NO.	DATE	NAME	CLASS	SUBCLASS
	A	5,546,194	8/13/96	Ross	358	445
	B	5,550,646	8/27/96	Hassan et al.	358	442
	C	5,689,300	11/18/97	Shibata et al.	348	15
	D	5,684,716	11/4/97	Freeman	348	14
	E	5,666,159	9/9/97	Parulski et al.	348	211
	F	5,539,452	7/23/96	Bush et al.	348	17
	G	5,515,176	5/7/96	Galen et al.	358	403
	H					
	I					
	J					
	K					
	L					
	M					

FOREIGN PATENT DOCUMENTS

		DOCUMENT NO.	DATE	COUNTRY	NAME	CLASS	SUBCLASS
	N						
	O						
	P						
	Q						
	R						
	S						
	T						

NON-PATENT DOCUMENTS

		DOCUMENT (Including Author, Title, Source, and Pertinent Pages)	DATE
	U		
	V		
	W		
	X		

FORM PTO 948 (REV. 11-97) U.S. DEPARTMENT OF COMMERCE-Patent and Trademark Office Application No. 09/006073

NOTICE OF DRAFTPERSON'S PATENT DRAWING REVIEW

The drawing filied (insert date) 1/12/98 are:

A. _____ not objected to by the Draftperson under 37 CFR 1.84 or 1.152.

B. X objected to by the Draftperson under 37 CFR 1.84 or 1.152 as indicated below. The Examiner will require submission of new, corrected drawings whe necessary. Corrected drawings must be submitted according to the instructions on the back of this notice.

1. DRAWINGS. 37 CFR 1.84(a): Acceptable categories of drawings: Black ink. Color.
   - _____ Color drawing are not acceptable until petition is granted. Fig.(s) _____
   - _____ Pencil and non black ink is not permitted. Fig(s)_____
2. PHOTOGRAPHS. 37 CFR 1.84(b)
   - _____ Photographs are not acceptable until petition is granted,
   - _____ 3 full-tone sets are required. Fig(s)_____
   - _____ Photographs not properly mounted (must brystol board or photographic double-weight paper). Fig(s)_____
   - _____ Poor quailty (half-tone). Fig(s)_____
3. TYPE OF PAPER. 37 CFR 1.84(e)
   - _____ Paper not flexible, strong, white and durable. Fig.(s)_____
   - _____ Erasures, alterations, overwritings, interlineations, folds, copy machine marks not acceptable. (too thin)
   - _____ Mylar, vellum paper is not acceptable (too thin). Fig(s)_____
4. SIZE OF PAPER. 37 CFR 1.84(F): Acceptable sizes:
   - X 21.0 cm by 29.7 cm (DIN size A4)
   - X 21.6 cm by 27.9 cm (8 1/2 x 11 inches)
   - _____ All drawings sheets not the same size. Sheet(s)_____
5. MARGINS. 37 CFR 18.4(g): Acceptable margins:
   - Top 2.5 cm Left 2.5 cm Right 1.5 cm Bottom 1.0 cm SIZE: A4 Size
   - Top 2.5 cm Left 2.5 cm Right 1.5 cm Bottom 1.0 cm SIZE: 8 1/2 x 11
   - _____ Margins not acceptable. Fig(s)_____
   - _____ Top (T) _____ Left (L)
   - _____ Right (R) _____ Bottom (B)
6. VIEWS. CFR 1.84(h)
   REMINDER: Specification may require revision to correspond to drawing changes.
   - _____ Views connected by projection lines or lead lines. Fig.(s)_____

   Partial views. 37 CFR 1.84(h)(2)
   - _____ Brackets needed to show figure as one entity. Fig.(s)_____
   - _____ Views not labeled separately or properly. Fig.(s)_____
   - _____ Enlarged view not labeled separately or properly. Fig.(s)_____
7. SECTIONAL VIEWS. 37 CFR 1.84(h)(3)
   - _____ Hatching not indicated for sectional portions of an object. Fig.(s)_____
   - _____ Sectional designation should be noted with Arabic or Roman numbers. Fig.(s)_____
8. ARRANGEMENT OF VIEWS. 37 CFR 1.84(i)
   - _____ Words do not appear on a horizontal, left-to-right fashion when page is either upright or turned, so that the top becomes the right side, except for graphs. Fig.(s)_____
   - _____ Views not on the same plane on drawing sheet. Fig.(s)_____
9. SCALE. 37 CFR 1.84(k)
   - _____ Scale not large enough to show mechansim without crowding when drawing is reduced in size to two-thirds in reproduction. Fig.(s)_____
10. CHARACTER OF LINES, NUMBERS, & LETTERS. 37 CFR 1.84(l)
    - X Lines, numbers & letters not uniformly thick and well defined, clean, durable and black (poor line quality). Fig.(s) 8A-8L
11. SHADING. 37 CFR 1.84(m)
    - _____ Solid black areas pale. Fig.(s)_____
    - _____ Solid black shading not permitted. Fig.(s)_____
    - _____ Shade lines, pale, rough and blurred. Fig.(s)
12. NUMBERS, LETTERS, & REFERENCE CHARACTERS. 37 CFR 1.48(p)
    - _____ Numbers and reference characters not plain and legible. Fig.(s) 7A, 7B, 8A-8L
    - X Figure legends are poor. Fig.(s) 8A-8L
    - _____ Numbers and reference characters not oriented in the same direction as the view. 37 CFR 1.84(p)(3) Fig.(s)_____
    - _____ Engligh alphabet not used. 37 CFR 1.84(p)(3) Fig.(s)_____
    - X Numbers, letters and reference characters must be at least .32 cm (1/8 inch) in height. 37 CFR 1.84(p)(3) Fig.(s) 8A-8L
13. LEAD LINES. 37 CFR 1.84(q)
    - _____ Lead lines cross each other. Fig.(s)_____
    - _____ Lead lines missing. Fig.(s)_____
14. NUMBERING OF SHEETS OF DRAWINGS. 37 CFR 1.48(t)
    - _____ Sheets not numbered consecutively, and in Ababic numerals beginning with number 1. Fig.(s)_____
15. NUMBERING OF VIEWS. 37 CFR 1.84(u)
    - _____ Views not numbered consecutively, and in Abrabic numerals, beginning with number 1. Fig.(s)_____
16. CORRECTIONS. 37 CFR 1.84(w)
    - _____ Corrections not made from PTO-948 dated _____
17. DESIGN DRAWINGS. 37 CFR 1.152
    - _____ Surface shading shown not appropriate. Fig.(s)_____
    - _____ Solid black shading not used for color contrast. Fig.(s)_____

COMMENTS
- DWG. SHEETS IMPROPER SIZE (fig 8A-8L)

REVIEWER T. Rogan DATE 11/30/99 TELEPHONE NO. 703 308 8335

ATTACHMENT TO PAPER NO._____

PTO COPY

REMINDER

Drawing changes may also require changes in the specification, e.g., if Fig. 1 is changed to Fig. 1A, Fig. 1B, Fig. 1C, etc., the specification, at the Brief Description of the Drawings, must likewise be changed. Please make such changes by 37 CFR 1.312 Amendment at the time of submitting drawing changes.

INFORMATION ON HOW TO EFFECT DRAWING CHANGES

1. Correction of Informalities--37 CFR 1.85

File new drawings with the changes incorporated therein. The application number or the title of the invention, inventor's name, docket number (if any), and the name and telephone number of a person to call if the Office is unable to match the drawings to the proper application, should be placed on the back of each sheet of drawings in accordance with 37 CFR 1.84(c). Applicant may delay filing of the new drawings until receipt of the Notice of Allowability (PTOL-37). Extensions of time may be obtained under the provisions of 37 CFR 1.136. The drawing should be filed as a separate paper with a transmittal letter addressed to the Drawing Review Branch.

2. Timing of Corrections

Applicant is required to submit **acceptable** corrected drawings within the three-month shortened statutory period set in the Notice of Allowability (PTOL-37). If a correction is determined to be unacceptable by the Office, applicant must arrange to have acceptable correction resubmitted within the original three-month period to avoid the necessity of obtaining as extension of time and paying the extension fee. Therefore, applicant should file corrected drawings as soon as possible.

Failure to take corrective action within set (or extended) period will result in **ABANDONMENT** of the Application.

3. Corrections other than Informalities Noted by the Drawing Review Branch on the Form PTO 948

All changes to the drawings, other than informalities noted by the Drawing Review Branch, **MUST** be approved by the examiner before the application will be allowed. No changes will be permitted to be made, other than correction of informalities, unless the examiner has approved the proposed changes.

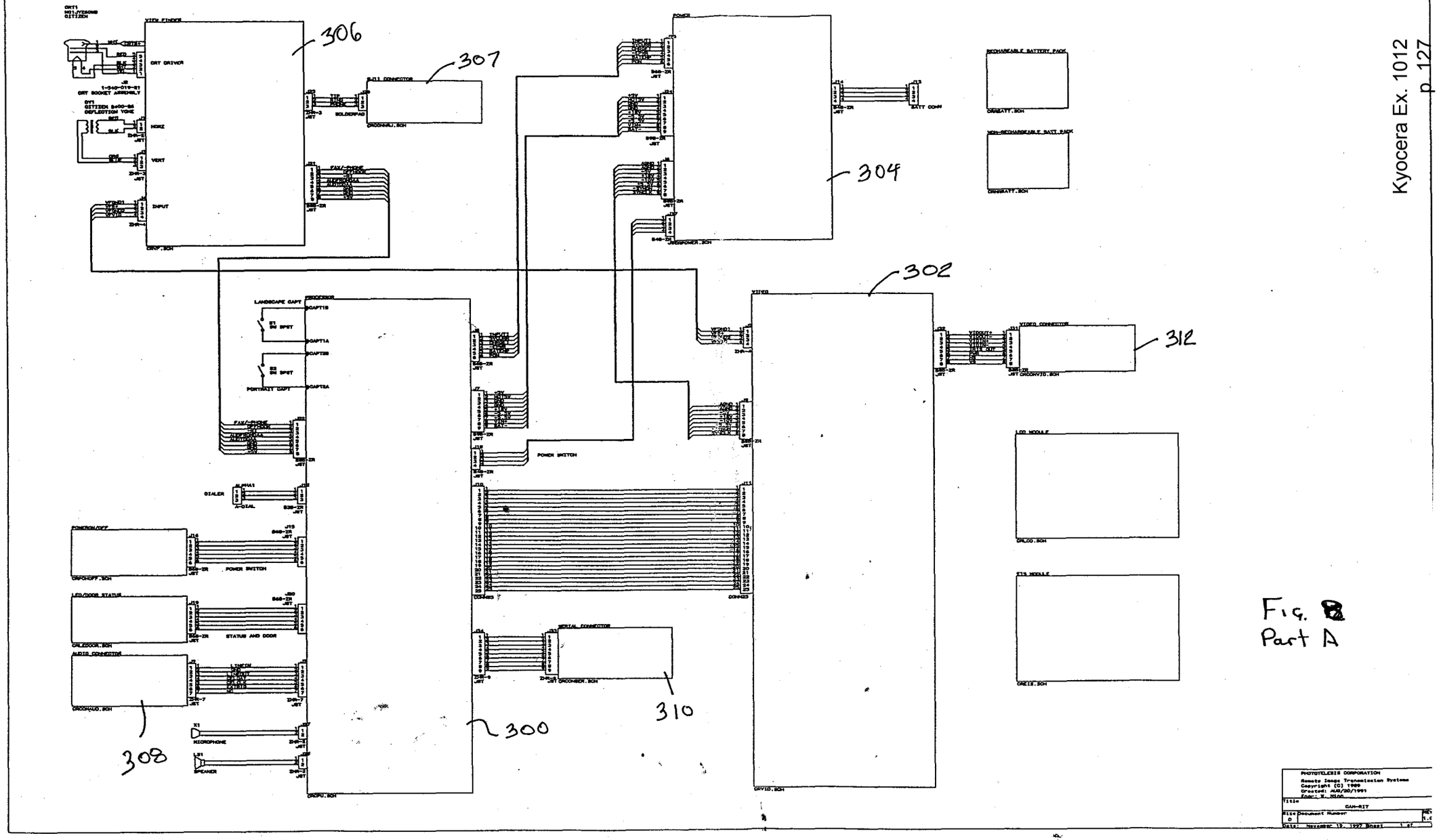
306
307
304
302
312
300
308
310
VIEW FINDER
ORT DRIVER
HORZ
VERT
INPUT
POWER
BATT CONN
RECHARGEABLE BATTERY PACK
PROCESSOR
LANDSCAPE CAPT
PORTRAIT CAPT
POWER SWITCH
DIALER
POWER SWITCH
STATUS AND DOOR
MICROPHONE
SPEAKER
SERIAL CONNECTOR
VIDEO
VIDEO CONNECTOR
LCD MODULE
PHOTOTELESIS CORPORATION
Remote Image Transmission Systems
Copyright (C) 1989
Created: AUG/30/1991
Title
CAM-RIT
Size
D
Document Number
Date: November 19, 1997 Sheet 1 of

Fig. 8
Part A

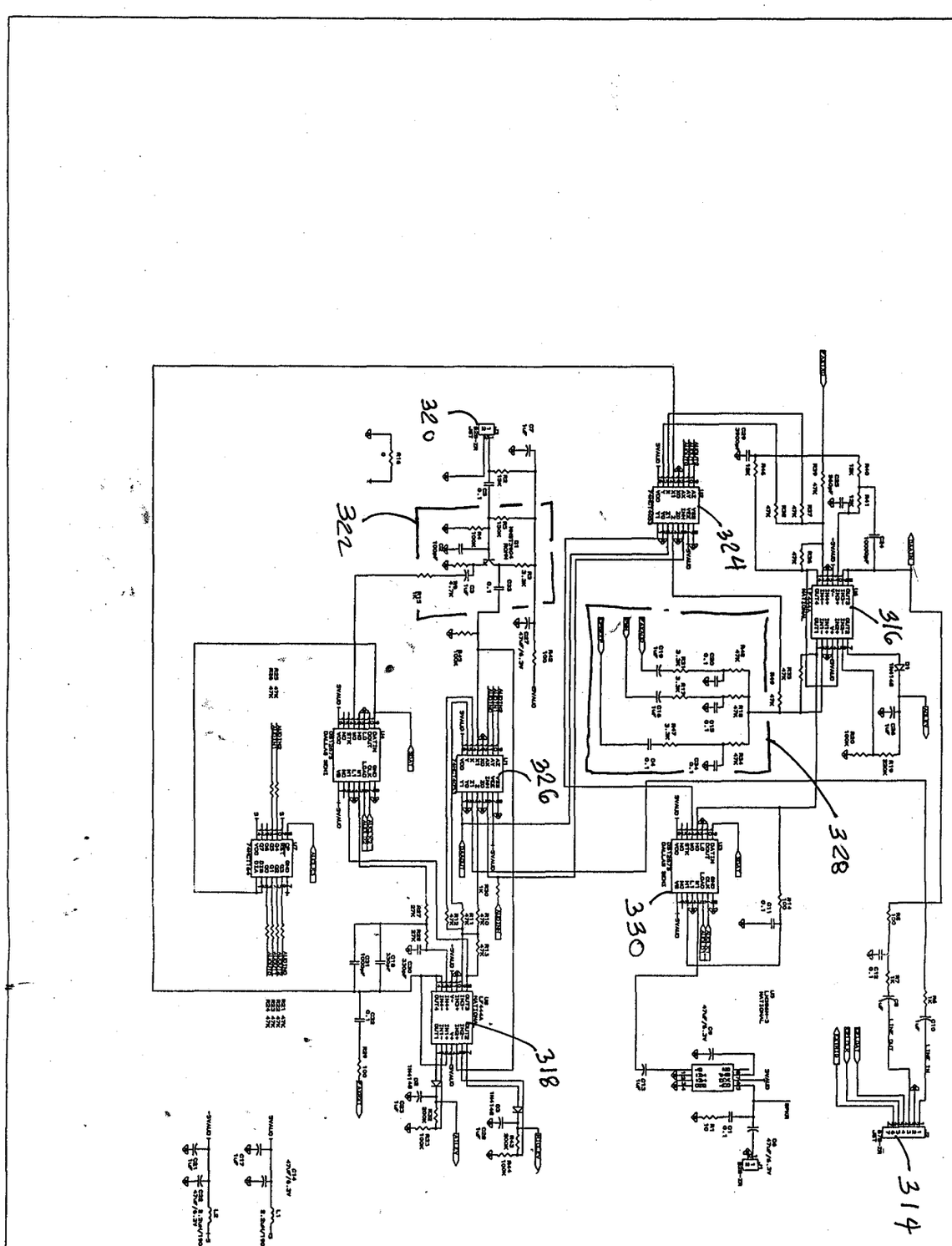

Fig 8 Part B

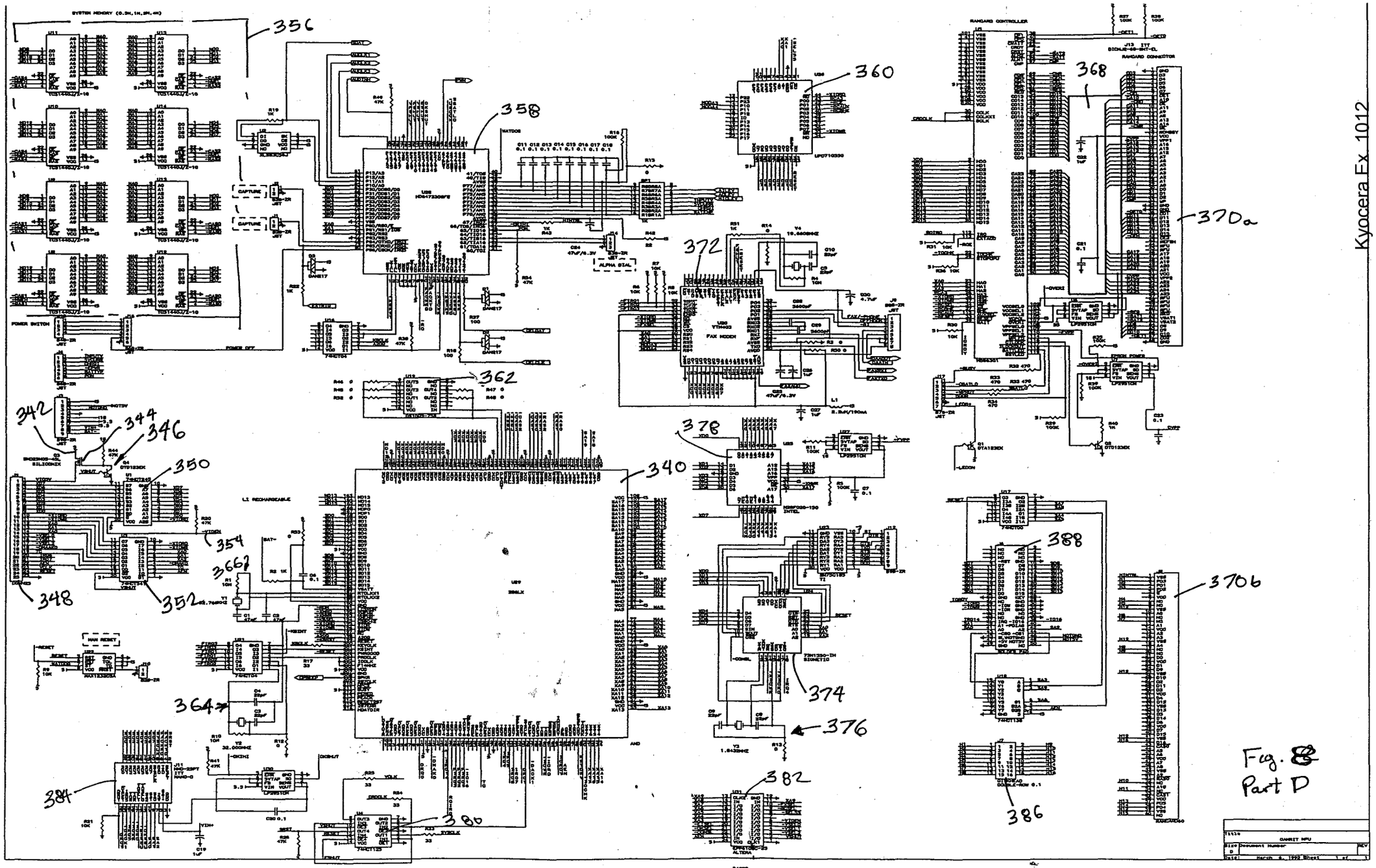
356
358
360
368
370a
372
362
342
344
346
350
340
378
354
366
348
352
364
374
376
388
370b
384
380
382
386

Fig. 8
Part D

Fig. 8B
Part C

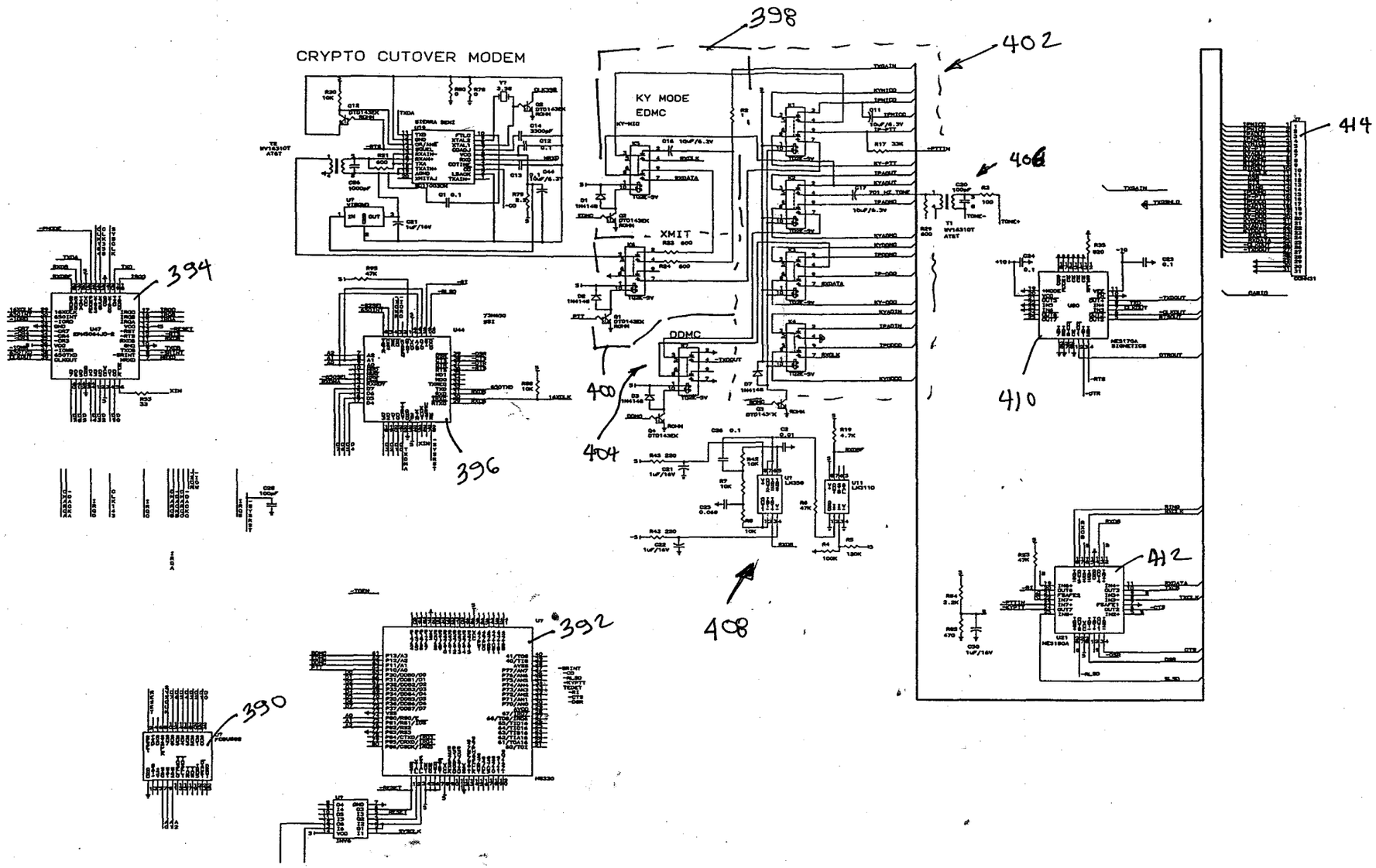

Fig. 8
Part E

Kyocera Ex. 1012
p. 131

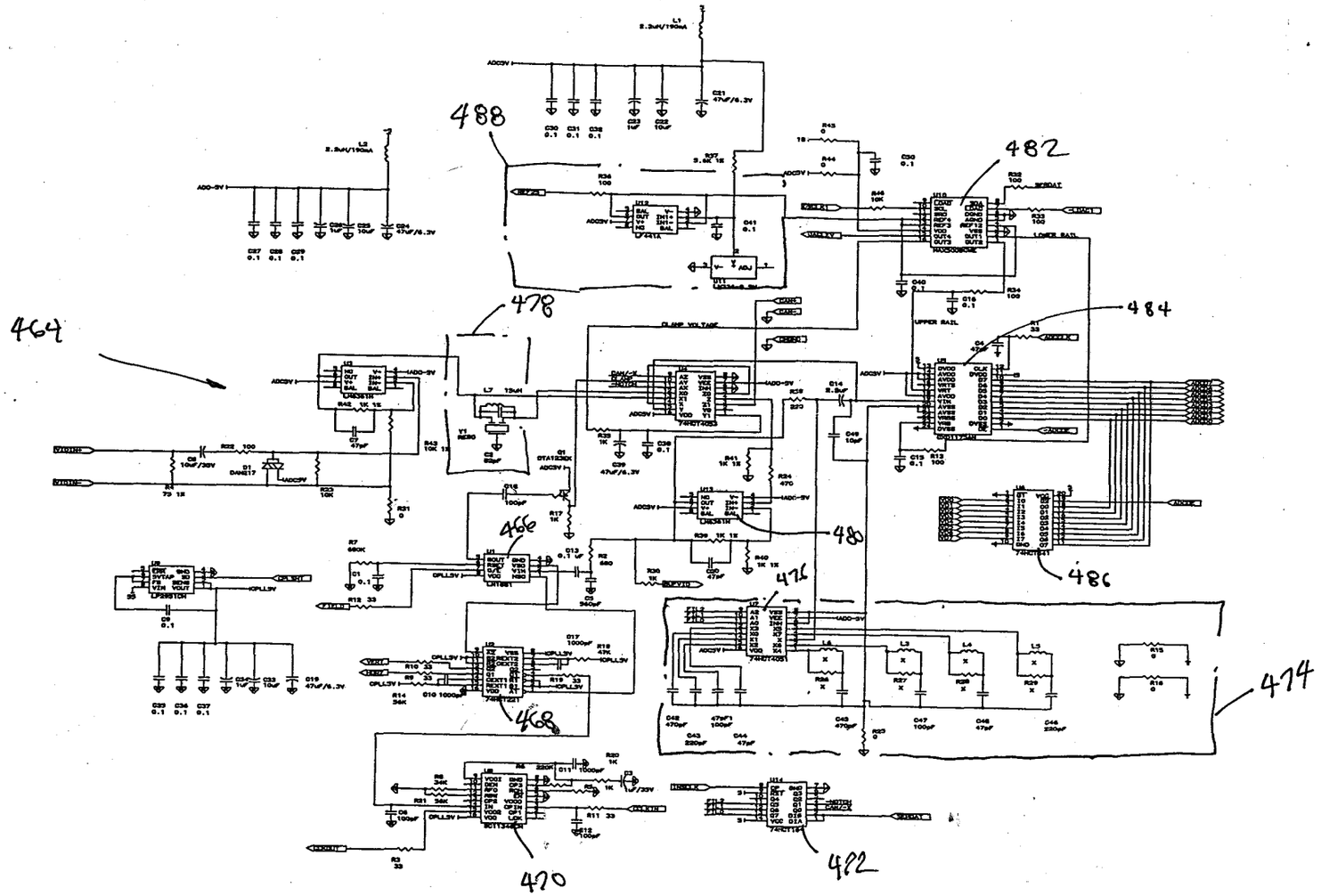

Fig. 8
Part K

Kyocera Ex. 1012
p. 132

Fig. 8
Part F

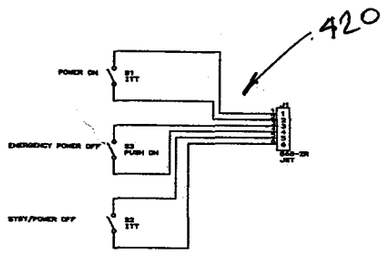

Fig. 8
Part G

PHOTOTELESIS CORPORATION
Remote Image Transmission Systems
Copyright (C) 1989
Created: AUG/20/1991
Engr: W. Hinn

Title		
CAMRIT POWER ON/OFF PCB		
Size	Document Number	REV
0		1.0
Date: February 23, 1992	Sheet 1 of 1	

Kyocera Ex. 1012
p. 135

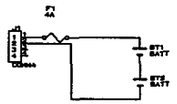

Battery Pack

Fig. 8
Part H

PHOTOTELESIS		
Title: GAN RIT NON RECHARGEABLE BATTERY		
Size: 0	Document Number:	Rev: 1.0
Date: February 14, 1992	Sheet 1 of 1	

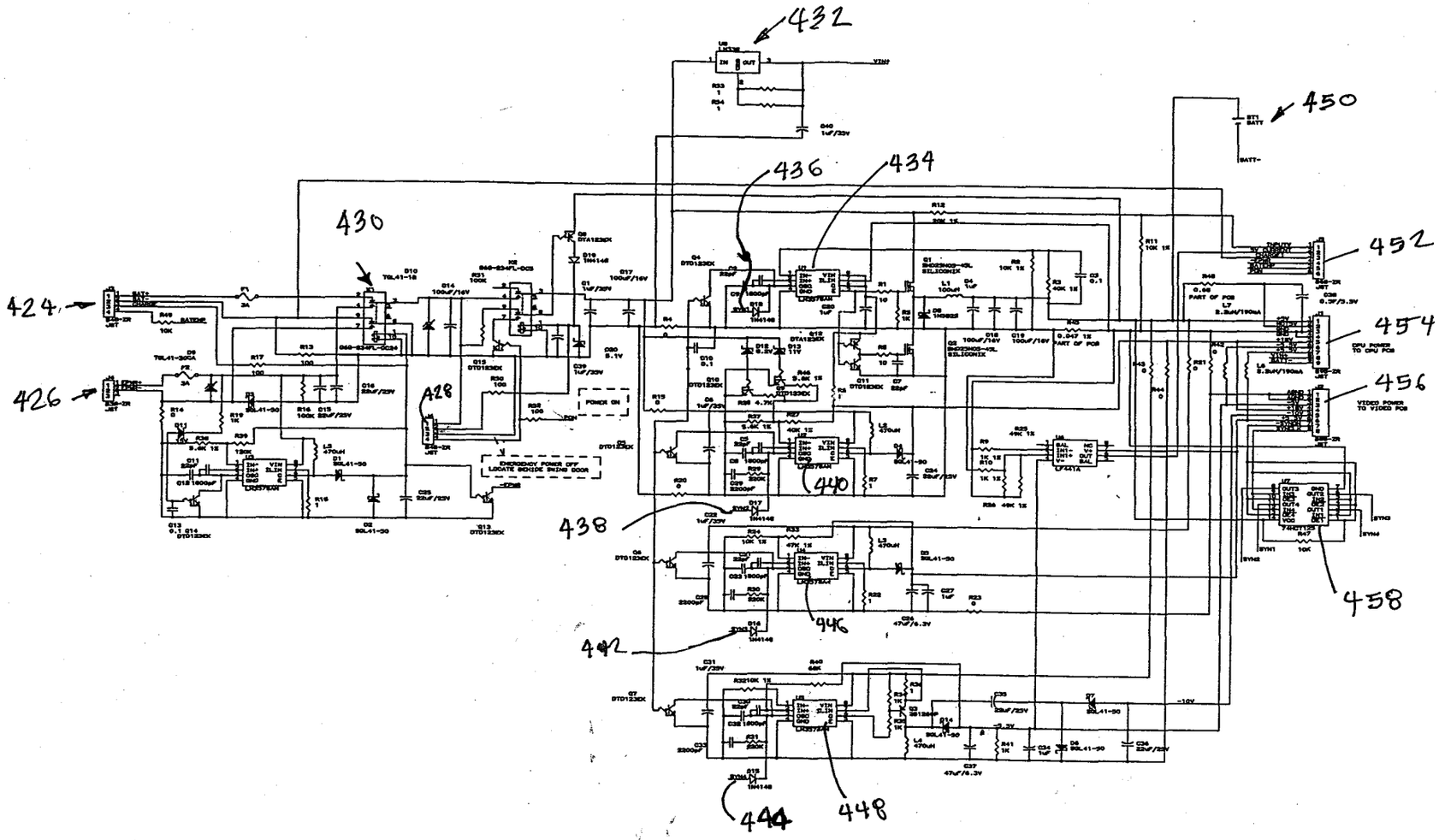

Fig. 8
Part I

Kyocera Ex. 1012
p. 136

Fig. 8
Part I

Kyocera Ex. 1012
p. 138

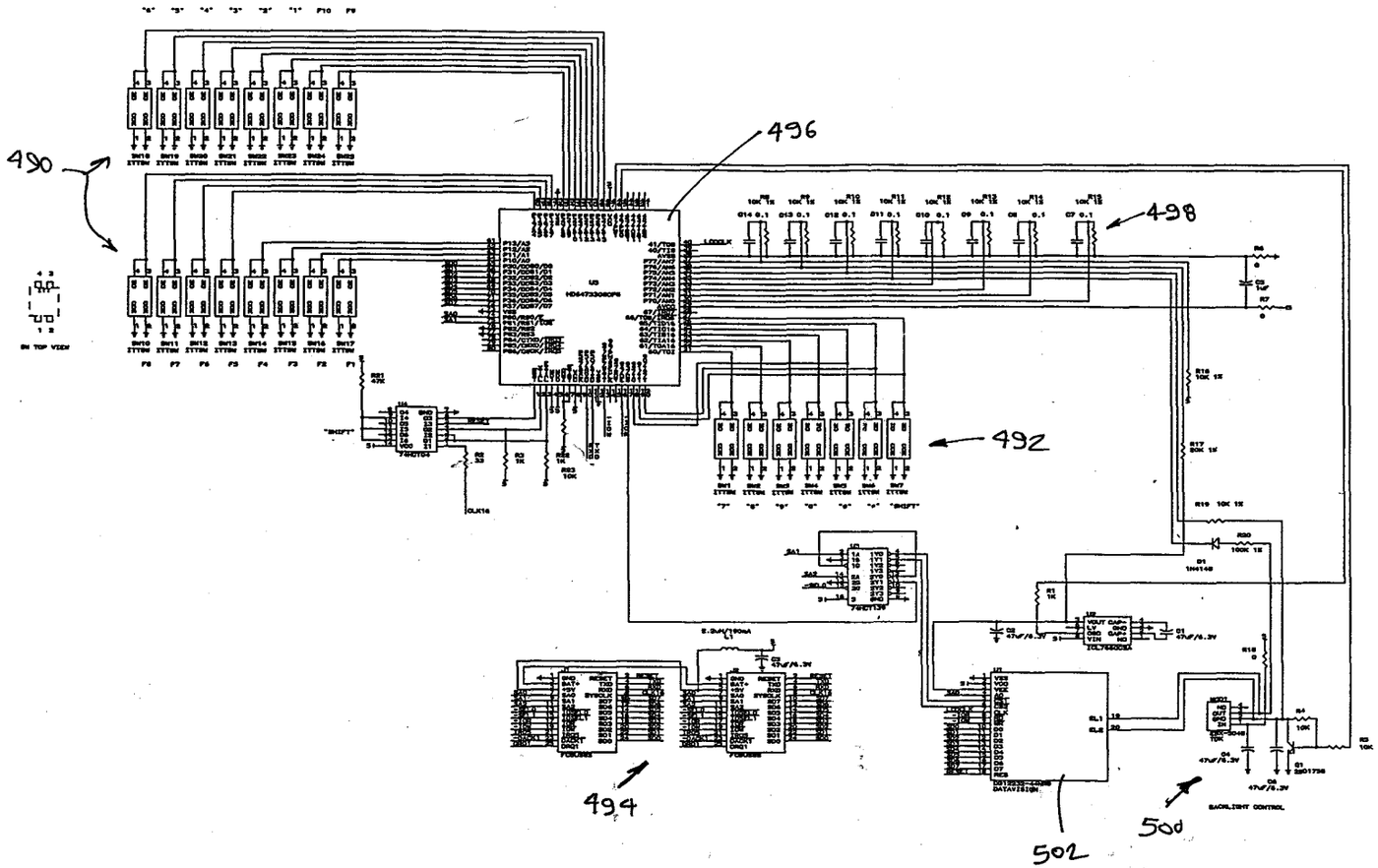

Fig. 8
Part L

OIPE
JUN 07 2000
PATENT & TRADEMARK OFFICE
JC111

#7

PATENT

IN THE UNITED STATES PATENT AND TRADEMARK OFFICE

Application of:

DAVID A. MONROE

Serial No. 09/006,073

Filed: January 12, 1998

Group Art Unit: 2722

Examiner: J. Pokrzywa

APPARATUS FOR CAPTURING, CONVERTING AND TRANSMITTING A VISUAL IMAGE SIGNAL VIA A DIGITAL TRANSMISSION SYSTEM

CERTIFICATE OF MAILING

I hereby certify that this correspondence is being deposited with the United States Postal Service as Express Mail, Express Mail No. EL285225617US, in an Express Mail envelope addressed to: COMMISSIONER OF PATENTS AND TRADEMARKS, Washington, D.C. 20231, this 7th. day of June, 2000.

Barbara Kobza

RECEIVED
JUN 14 2000
TECH CENTER 2700

REQUEST FOR THREE-MONTH EXTENSION OF TIME

HONORABLE COMMISSIONER
OF PATENTS AND TRADEMARKS
Box: Fee
Washington, D.C. 20231

Sir:

Responsive to the Office Action dated December 7, 1999, a three-month extension of time is hereby requested in the above-identified application. The requisite extension fee of $435.00 is attached.

06/12/2000 TTRAN1 00000050 09006073
01 FC:217 435.00 OP

Application of
David A. Monroe

Serial No. 09/006,073

The Commissioner is hereby authorized to charge any additional fees in this application under 35 C.F.R. §1.16 or §1.17 to **Deposit Account No. 50-0259**. An additional copy of this Request for Extension of Time is attached.

Respectfully submitted,

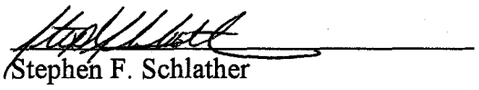

Stephen F. Schlather
Registration No. 45,081

BRACEWELL & PATTERSON, L.L.P.
711 Louisiana, Suite 2900
Houston, Texas 77002
713- 221-1339
Attorney Docket No. 069834.000024

SCHLSF\069834\000001
HOUSTON\1133492.1

GAU 2722

BRACEWELL & PATTERSON L.L.P.
ATTORNEYS AT LAW

711 Louisiana Street, Suite 2900
Houston, Texas 77002-2781
Phone: 713.223.2900
Fax: 713.221.1212

OIPE JC111
JUN 07 2000
PATENT & TRADEMARK OFFICE

June 7, 2000

RECEIVED
JUN 14 2000
TECH CENTER 2700

Via Express Mail EL285225617US

Commissioner of Patents and Trademarks
Group Art Unit 2722
Attention: Examiner J. Pokrzywa
Washington, D.C. 20231

Re: U.S. Patent Application: Apparatus For Capturing, Converting and Transmitting A Visual Image Signal Via A Digital Transmission System
Serial No.: 09/006,073
Attorney Docket No.: 069834.000024

Dear Sir:

Enclosed for filing are the following documents:

1. Amendment and Response to December 7, 1999 Office Action;
2. Request for Three Month Extension of Time and check in the amount of $435.00 for a small entity;
3. Transmittal letter in duplicate; and
4. Postcard.

If any additional fees are required, please charge to deposit account 50-0259.

Very truly yours,

Bracewell & Patterson, L.L.P.

Stephen F. Schlather

SFS/az
Enclosures

SCHLSF\069834\000024
HOUSTON\1133412.1

IN THE UNITED STATES PATENT AND TRADEMARK OFFICE

#8/A
KD
6-16-00

In re Applicant: §

DAVID A. MONROE §

Filed: January 12, 1998 § Art Unit: 2722

Serial No.: 09/006,073 § Examiner: Pokrzywa, J.

For: APPARATUS FOR CAPTURING, CONVERTING AND TRANSMITTING A VISUAL IMAGE SIGNAL VIA A DIGITAL TRANSMISSION SYSTEM § Docket No.: 069834.000024

OIPE JUN 07 2000 PATENT & TRADEMARK OFFICE TC 2700

RECEIVED JUN 14 2000 TECH CENTER 2700

AMENDMENT AND RESPONSE

Assistant Commissioner for Patents
Washington, D.C. 20231

Dear Sir:

This paper is filed in response to the Office Action of December 07, 1999.

IN THE SPECIFICATION

Page 11, Line 13: please delete "PCMCIA card 50" and insert therefore --PCMCIA card 72--.

Page 18, line 20: please delete "Fig. 8".

Page 21, line 24: please delete "ne" and insert therefore --new--.

IN THE CLAIMS

1. (Amended) A[n] self-contained wireless image processing system for capturing a visual image at a first location and transmitting it via cellular telephone to a remote receiving station, the image processing system comprising:

a. An [image capture device] analog color video camera;

b. A processor for generating a data signal representing the image, the processor comprising a convertor for converting the color analog signal to a

gray scale, converting the gray scale to a suitable half-tone image and converting the half-tone image into a binary data signal;

c. A [communications device] integrated cellular telephone adapted for transmitting the binary data signal to the remote receiving station

d. a subprocessor for generating a Group-III facsimile compatible signal representing the [digital] binary data signal.

Please cancel claims 5-8.

Claim 9, line 1: please delete "further including" and insert therefore --wherein the cellular device includes--.

Claim 25, line 2: after "apparatus" insert --controls--.

Claim 27, line 2: after "plurality" insert --of--.

Please cancel claim 181.

Please cancel claim 190.

REMARKS

Applicant confirms the election of claims 1-28 and 181 and 190.

Claims 1, 2, 4, 12, 13, 16, 18, 20, 21 and 181 stand rejected under 35 U.S.C. 102(b) as being anticipated by U.S. Patent No. 5,546,194 (Ross). Applicant respectfully traverses the rejection.

Ross discloses an apparatus for receiving and converting a video image to a Group III fax format (col. 2/15-19). The converted video image may then be sent from the apparatus to a suitable Group III fax machine or the like. The Ross patent does not disclose the use of a cellular telephone to transmit the converted video image.

The claims of the present application have been amended to more accurately and fully reflect Applicant's invention. Claim 1 provides for the use of a cellular telephone for transmitting a converted video image via the Group III fax protocol. In order to sustain a rejection under 35 U.S.C. 102(b), a single prior art reference must disclose each and every claim element of the subject application. Here, the Ross reference specifically does not disclose the use of a cellular telephone to transmit data. Therefore, Applicant respectfully requests that the Examiner withdraw

the rejection of claims 1, 2, 4, 12, 13, 16, 18, 20, 21 and 181.

Claims 1, 2, 6-11, 15, 17, 19, 21-23 and 27 stand rejected under 35 U.S.C. 102(b) as being anticipated by U.S. Patent No. 5,550,646 (Hassan). Applicant respectfully traverses the rejection.

Hassan describes an apparatus for capturing, converting and sending black and white images (col. 1/54-60). The apparatus does not disclose a color conversion mechanism. To the contrary, Hassan specifically describes the use of a black and white CCD to generate an image having 16 possible grey levels, which is then dithered to produce an image which may be sent via fax (col. 3/58-64).

Applicant's invention specifically uses a color camera to obtain the original image and then processes the image by converting the color image to a gray scale, converting the gray scale to a half-tone image and then producing a binary data signal from the half-tone image. Hassan does not disclose these elements of Applicant's invention. Therefore, Applicant respectfully requests that the Examiner withdraw the rejection of claims 1, 2, 6-11, 15, 17, 19, 21-23 and 27.

Claims 1, 14, 24-26 and 190 stand rejected under 35 U.S.C. 102(e) as being anticipated by U.S. Patent No. 5,689,300 (Shibata). Applicant respectfully traverses the rejection.

Shibata describes a teleconference system which makes it possible to hold an audio and video meeting between distant places connected by a communications network. Applicant asserts that the Examiner has not fully appreciated the differences between the Shibata system and the present invention. Shibata does not disclose a system which is capable of obtaining, converting and sending a color image via Group III fax. Rather, the system of Shibata only allows a simultaneous voice and data transfer via a Group III fax interface (col. 10/45 - col. 11/22; Fig. 5). The system may differentiate between audio and data signals provided to or from the fax modular jack 107, but is not capable of converting an image for transmission via the jack.

As previously described, Applicant's invention captures converts and transmits a color image to a remote location via the Group III fax protocol. As Shibata does not disclose or describe these elements of Applicant's claims, Applicant respectfully requests that the rejection of claims be withdrawn.

Claims 3 and 5 stand rejected under 35 U.S.C. 103(a) as being unpatentable over Ross. Applicant respectfully traverses the rejection.

As detailed above, Ross does not teach Applicant's invention. There is no suggestion that the invention of Ross may include a cellular telephone for transmitting images. Therefore, Applicant respectfully requests that the rejection of claim 3 be withdrawn. Claim 5 is no longer the subject of the present application.

Claim 28 stands rejected under 35 U.S.C. 103(a) as being unpatentable over Shibata in view of Hassan. Applicant respectfully traverses the rejection.

As detailed above, the invention of Hassan does not disclose, teach or suggest the conversion of images for transmission via the Group III fax protocol. Neither Hassan nor Shibata teach a system which includes an input device for controlling the processor configuration from a remote location. Therefore, even in combination these references do not teach, disclose or suggest Applicant's invention. Withdrawal of this rejection is therefore requested.

In summary, for reasons detailed above, it is submitted that all claims now present in the application are patentable over the prior art. Accordingly, allowance of all claims is submitted to be in order. Such action is respectfully requested.

Respectfully submitted,

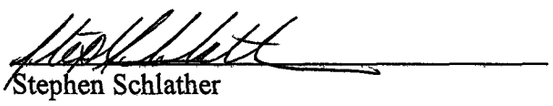

Stephen Schlather
Reg. No. 45,081

BRACEWELL & PATTERSON, L.L.P.
711 Louisiana, Suite 2900
Houston, Texas 77002
713/221-1339
Fax 713/223-2141

OIPE
JUN 07 2000
PATENT & TRADEMARK OFFICE
JC111

RECEIVED
JUN 14 2000
TECH CENTER 2700

CERTIFICATE UNDER 37 CFR 1.10

I hereby certify that this correspondence is being deposited with the United States Postal Service as Express Mail EL285225617US in an envelope addressed to: Commissioner of Patents, Washington, D.C., on June 7, 2000.

Barbara Kobza

SCHLSF\058959\007010
HOUSTON\1118125.1

UNITED STATES DEPARTMENT OF COMMERCE
Patent and Trademark Office
Address: COMMISSIONER OF PATENTS AND TRADEMARKS
Washington, D.C. 20231

APPLICATION NO.	FILING DATE	FIRST NAMED INVENTOR	ATTORNEY DOCKET NO.
09/006,073	01/12/98	MONROE D	58959.12

LM31/0829

BRACEWELL & PATTERSON
SOUTH TOWER PENNZOIL PLACE
711 LOUISIANA STREET SUITE 2900
HOUSTON TX 77002-2781

EXAMINER	
POKRZYWA, J	
ART UNIT	**PAPER NUMBER**
2722	9

DATE MAILED: 08/29/00

Please find below and/or attached an Office communication concerning this application or proceeding.

Commissioner of Patents and Trademarks

Office Action Summary

Application No.	Applicant(s)
09/006,073	Monroe, David A.
Examiner	**Group Art Unit**
Joseph Pokrzywa	2722

☒ Responsive to communication(s) filed on *Jun 7, 2000*.

☒ This action is **FINAL.**

☐ Since this application is in condition for allowance except for formal matters, **prosecution as to the merits is closed** in accordance with the practice under *Ex parte Quayle*, 1935 C.D. 11; 453 O.G. 213.

A shortened statutory period for response to this action is set to expire *3* month(s); or thirty days, whichever is longer, from the mailing date of this communication. Failure to respond within the period for response will cause the application to become abandoned. (35 U.S.C. § 133). Extensions of time may be obtained under the provisions of 37 CFR 1.136(a).

Disposition of Claims

☒ Claim(s) *1-4 and 9-28* is/are pending in the application.

Of the above, claim(s) _____ is/are withdrawn from consideration.

☐ Claim(s) _____ is/are allowed.

☒ Claim(s) *1-4 and 9-28* is/are rejected.

☐ Claim(s) _____ is/are objected to.

☐ Claims _____ are subject to restriction or election requirement.

Application Papers

☐ See the attached Notice of Draftsperson's Patent Drawing Review, PTO-948.

☒ The drawing(s) filed on *Jan 12, 1998* is/are objected to by the Examiner.

☐ The proposed drawing correction, filed on _____ is ☐approved ☐disapproved.

☐ The specification is objected to by the Examiner.

☐ The oath or declaration is objected to by the Examiner.

Priority under 35 U.S.C. § 119

☐ Acknowledgement is made of a claim for foreign priority under 35 U.S.C. § 119(a)-(d).

☐ All ☐ Some* ☐ None of the CERTIFIED copies of the priority documents have been

☐ received.

☐ received in Application No. (Series Code/Serial Number) _____.

☐ received in this national stage application from the International Bureau (PCT Rule 17.2(a)).

*Certified copies not received: _____.

☐ Acknowledgement is made of a claim for domestic priority under 35 U.S.C. § 119(e).

Attachment(s)

☒ Notice of References Cited, PTO-892

☐ Information Disclosure Statement(s), PTO-1449, Paper No(s). _____

☐ Interview Summary, PTO-413

☐ Notice of Draftsperson's Patent Drawing Review, PTO-948

☐ Notice of Informal Patent Application, PTO-152

--- SEE OFFICE ACTION ON THE FOLLOWING PAGES ---

Kyocera Ex. 1012
p. 148

DETAILED ACTION

Response to Amendment

1. Applicant's amendment was received on 6/7/00, and has been entered and made of record. Currently, **claims 1 through 4, 9 through 28** are pending, with claims 29 through 180, 182 through 189, and 191 through 266 withdrawn from consideration, as being drawn to a non-elected invention.

Response to Arguments

2. Applicant's arguments with respect to claim 1 have been considered but are moot in view of the new ground(s) of rejection.

Drawings

3. The drawings remain objected to as failing to comply with 37 CFR 1.84(p)(4) because reference character "81" has been used to designate both the hardwired personal computer in Fig. 4 and the data multiplexer circuit in Fig. 5, and reference character "83" has been used to designate both the communications interface module in Fig. 4 and the sync signal in Fig. 5. Correction is required.

4. The drawings remain objected to as failing to comply with 37 CFR 1.84(p)(5) because they do not include the following reference sign(s) mentioned in the description:

reference numeral "29", on page 10, line 11.

Correction is required.

5. The drawings remain objected to because of the problems addressed in the attached PTO-948, and because of:

in Fig. 4, PC modem protocol box "66" should read "68" as read on page 12, lines 27 and 28.

Correction is required.

Specification

6. The objection to the specification, as cited in the Office action dated 12/7/99, is overcome by the changes set forth in the amendment.

Claim Objections

7. The objection to the claims, as cited in the Office action dated 12/7/99, is overcome by the changes set forth in the amendment.

Claim Rejections - 35 USC § 112

8. The following is a quotation of the second paragraph of 35 U.S.C. 112:

> The specification shall conclude with one or more claims particularly pointing out and distinctly claiming the subject matter which the applicant regards as his invention.

9. **Claims 2 through 4, 9, 11 through 22, 24, 25, 27, and 28** are rejected under 35 U.S.C. 112, second paragraph, as being indefinite for failing to particularly point out and distinctly claim the subject matter which applicant regards as the invention.

10. ***Claim 2*** recites the limitation "the communications device" in line 2. There is insufficient antecedent basis for this limitation in the claim.

11. ***Claim 3*** recites the limitation "said memory" in line 1. There is insufficient antecedent basis for this limitation in the claim.

12. ***Claim 4*** recites the limitation "the image capture device" in line 1. There is insufficient antecedent basis for this limitation in the claim.

13. ***Claim 9*** recites the limitation "the cellular device" in line 1. There is insufficient antecedent basis for this limitation in the claim.

14. ***Claim 11*** recites the limitation "the communications device" in line 3. There is insufficient antecedent basis for this limitation in the claim.

15. ***Claim 12*** recites the limitation "the image capture device" in line 2. There is insufficient antecedent basis for this limitation in the claim.

16. ***Claim 13*** recites the limitation "the communications device" in line 2. There is insufficient antecedent basis for this limitation in the claim.

17. ***Claim 14*** recites the limitation "the captured video signal" in lines 2 and 3. There is insufficient antecedent basis for this limitation in the claim.

18. ***Claim 15*** recites the limitation "said image data signal" in line 2. There is insufficient antecedent basis for this limitation in the claim, as there is now a "data signal" mentioned in line 5 of claim 1, and a "binary data signal" mentioned in line 8 of claim 1, but not specifically an "image data signal".

19. ***Claim 16*** recites the limitation "said image data signal" in lines 1 and 2. There is insufficient antecedent basis for this limitation in the claim, as there is now a "data signal" mentioned in line 5 of claim 1, and a "binary data signal" mentioned in line 8 of claim 1, but not specifically an "image data signal".

20. ***Claim 17*** recites the limitation "said image data signal" in lines 1 and 2. There is insufficient antecedent basis for this limitation in the claim, as there is now a "data signal" mentioned in line 5 of claim 1, and a "binary data signal" mentioned in line 8 of claim 1, but not specifically an "image data signal".

21. ***Claim 18*** recites the limitation "said image data signal" in lines 1 and 2. There is insufficient antecedent basis for this limitation in the claim, as there is now a "data signal" mentioned in line 5 of claim 1, and a "binary data signal" mentioned in line 8 of claim 1, but not specifically an "image data signal".

22. ***Claim 19*** recites the limitation "the image data signal" in line 2. There is insufficient antecedent basis for this limitation in the claim, as there is now a "data signal" mentioned in line 5

of claim 1, and a "binary data signal" mentioned in line 8 of claim 1, but not specifically an "image data signal".

23. ***Claim 20*** recites the limitation "the image data signal" in line 2. There is insufficient antecedent basis for this limitation in the claim, as there is now a "data signal" mentioned in line 5 of claim 1, and a "binary data signal" mentioned in line 8 of claim 1, but not specifically an "image data signal".

24. ***Claim 21*** recites the limitation "the image data signal" in line 2. There is insufficient antecedent basis for this limitation in the claim, as there is now a "data signal" mentioned in line 5 of claim 1, and a "binary data signal" mentioned in line 8 of claim 1, but not specifically an "image data signal".

25. ***Claim 22*** recites the limitation "the image data" in line 2. There is insufficient antecedent basis for this limitation in the claim.

26. ***Claim 24*** recites the limitation "the image capture device" in line 2. There is insufficient antecedent basis for this limitation in the claim.

27. ***Claim 25*** recites the limitation "said image capture device" in lines 1 and 2. There is insufficient antecedent basis for this limitation in the claim.

28. ***Claim 27*** recites the limitation "said image capture device" in lines 1 and 2. There is insufficient antecedent basis for this limitation in the claim.

29. ***Claim 28*** recites the limitation "said image capture device" in lines 1 and 2. There is insufficient antecedent basis for this limitation in the claim.

Claim Rejections - 35 USC § 103

30. The following is a quotation of 35 U.S.C. 103(a) which forms the basis for all obviousness rejections set forth in this Office action:

> (a) A patent may not be obtained though the invention is not identically disclosed or described as set forth in section 102 of this title, if the differences between the subject matter sought to be patented and the prior art are such that the subject matter as a whole would have been obvious at the time the invention was made to a person having ordinary skill in the art to which said subject matter pertains. Patentability shall not be negatived by the manner in which the invention was made.

31. **Claims 1 through 4, 10 through 13, 15 through 17, 19, 21 through 23, and 27** are rejected under 35 U.S.C. 103(a) as being unpatentable over Creedon *et al.* (U.S. Patent Number 5,235,432, cited in the IDS filed 5/26/98) in view of Hassan *et al.* (U.S. Patent Number 5,550,646, cited in the Office action dated 12/7/99).

Regarding ***claim 1***, Creedon discloses a self-contained wireless image processing system (see Fig. 1, along with column 5, lines 11 through 16) for capturing a visual image at a first location (video source 106) and transmitting it via a cellular telephone network (column 5, lines 11 through 16) to a remote receiving station (facsimile receiver 110), with the system comprising an analog color video camera (video camera 106a, column 3, lines 54 through 64, and column 4, lines 31 through 44), a processor (the video signal processing section and the video signal conversion section 104) for generating a data signal representing the image (column 3, lines 65 through column 4, line 5, and column 4, lines 45 through 62), with the processor comprising a converter for converting the color analog signal to a gray scale (using the ADC 114, column 3, line 65 through column 4, line 5, and column 4, lines 31 through 44), converting the gray scale to

a suitable half-tone image (dithering process of the pixel-to-pel converter 21, column 14, lines 50 through column 15, line 3), and converting the half-tone image into a binary data signal (column 1, line 53 through column 2, line 9, and column 12, line 67 through column 13, line 9), an integrated cellular telephone modem adapted for transmitting the binary data signal to the remote receiving station (column 4, line 66 through column 5, line 16), and a subprocessor (facsimile standard encoder 208) for generating a Group-III facsimile compatible signal representing the binary data signal (column 15, lines 4 through 13).

However, Creedon fails to specifically teach of transmitting the captured visual image via a *cellular telephone*, wherein an integrated *cellular telephone* is adapted for transmitting the binary data signal to the remote receiving station. Hassan discloses a wireless self-contained image processing system for capturing a visual image and transmitting it to a remote receiving station (column 1, lines 47 through 52, along with column 2, lines 43 through 61, and column 3, lines 10 through 20), with the system comprising a (device 110 in Fig. 1), a processor (microcontroller 205) for generating a data signal representing the image (column 3, lines 21 through 46), a cellular telephone (column 4, line 65 through column 5, line 9) adapted for transmitting the data signal to the remote receiving station (via fax modem 240, column 4, line 65 through column 5, line 9), and a subprocessor for generating a Group-III facsimile compatible signal representing the data signal (column 4, line 65 through column 5, line 9). Therefore, it would have been obvious to a person of ordinary skill in the art at the time the invention was made to include Hassan's teachings in Creedon's system. Creedon's system would become more versatile with the addition

of Hassan's teachings, as the unit would be mobile, therein able to transmit anywhere cellular service is available, thereby not being stationary, as recognized by Hassan.

Regarding ***claim 2***, Creedon and Hassan disclose the system discussed above in claim 1, and Creedon further teaches of a memory (data memory RAM 154) for receiving and storing the data signal (column 5, line 45 through column 6, line 6), and the modem is adapted for recalling the stored data signal from memory (column 4, lines 57 through 65). However, Creedon is unclear if a cellular telephone is adapted for recalling the stored data signal from memory. Hassan discloses the system discussed above in claim 1, and further teaches of a memory for receiving and storing the data signal (RAM 207, column 3, lines 47 through 50), and wherein the cellular telephone (column 4, line 65 through column 5, line 9) is adapted for recalling the stored data signal from memory (column 5, lines 35 through 44, and column 5, lines 52 through 56). Therefore, it would have been obvious to a person of ordinary skill in the art at the time the invention was made to include Hassan's teachings in Creedon's system. Creedon's system would become more versatile with the addition of Hassan's teachings, as the unit would be mobile, therein able to transmit anywhere cellular service is available, thereby not being stationary, as recognized by Hassan.

Regarding ***claim 3***, Creedon and Hassan discloses the system discussed above in claim 1, wherein Creedon's system is adapted for selectively charging and discharging a random access medium (data memory RAM 154, column 5, line 55 through column 6, line 6). However, Creedon fails to teach if the random access medium is removable. Typically in the art, video cassettes and

floppy disks are used are used for recording images, which are both inherently removable random access mediums. Therefore, it would have been obvious to a person of ordinary skill in the art at the time the invention was made to include a removable random access medium in Creedon's system. Creedon's system would easily be modified to include a removable random access medium since it is well known in the art, and desirable to have a removable RAM, as user's would be capable of taking the removed RAM to an alternate location for subsequent processing.

Regarding ***claim 4***, Creedon and Hassan disclose the system discussed above in claim 1, and Creedon further teaches that the analog color video camera is an analog camera (video camera 106a) for generating an analog image signal (column 3, lines 45 through 68), and there is further included an analog to digital converter for converting the analog image signal to a digital signal (ADC 114, column 3, line 65 through column 4, line 5).

Regarding ***claim 10***, Creedon and Hassan disclose the system discussed above in claim 1, and Hassan further teaches of a facsimile receiving device associated locally with the system for providing a local printer for reproducing the captured image in hard copy (column 1, lines 52 through 63, column 2, line 64 through column 3, line 4, and column 6, lines 22 through 42). Therefore, it would have been obvious to a person of ordinary skill in the art at the time the invention was made to include Hassan's further teachings in Creedon's system. Creedon's system would become more user friendly with the addition of Hassan's teachings, as a user would be able to view a hardcopy of the video captured, as recognized by Hassan.

Regarding ***claim 11***, Creedon and Hassan disclose the system discussed above in claim 1, and Hassan further teaches of the processor is adapted for generating a signal in any of a plurality of selected protocols (column 6, line 62 through column 7, line 2, column 3, lines 5 through 20, and column 4, line 65 through column 5, line 9) and wherein the cellular telephone (column 5, lines 1 through 9) is adapted for transmitting the signal in the proper protocol to a remote, compatible receiving station (column 2, lines 39 through 66). Therefore, it would have been obvious to a person of ordinary skill in the art at the time the invention was made to include Hassan's further teachings in Creedon's system. Creedon's system would become more user friendly with the addition of Hassan's teachings, as a user would be able to transmit the image in various protocols, depending on the receiver, as recognized by Hassan.

Regarding ***claim 12***, Creedon and Hassan disclose the system discussed above in claim 1, and Creedon further teaches of the video camera is an analog video camera for generating a video signal (column 3, lines 45 through 68). Further, Creedon teaches that the processor comprises a sync detector (PLL 116) and a video address generator (column 4, lines 49 through 56) for synchronizing the digital signal with the analog signal for defining the beginning and end of the signal to define a still frame (column 3, line 65 through column 4, line 19), a random access memory (data memory RAM 154) for receiving and storing the converted, synchronized signal frame-by-frame (column 5, lines 55 through 65), a processor routine for converting the signals stored in the memory to a protocol adapted for transmission (column 4, line 45 through column 5, line 10) to a remote, compatible protocol receiving station (facsimile receiver 110), and a

communications device (modem 156, RS-232 interface 158, or cellular telephone modem, column 4, line 66 through column 5, line 10) for transmitting the signal in the proper protocol to the compatible receiving station (column 5, line 66 through column 6, line 11).

Regarding ***claim 13***, Creedon and Hassan disclose the system discussed above in claim 1, and Creedon further teaches of the system being of modular construction (seen in Fig. 1), and the camera (video camera 106a, part of video source 106), the processor (video signal processing section 102 and video signal conversion section 104), and the cellular telephone are each independent, functional units (column 5, lines 11 through 16, wherein an inherent cellular phone would be attached to the cellular modem, wherein the cellular phone would be an independent, functional unit) which may be coupled to one another for defining the assembled system (seen in Fig. 1; column 3, lines 37 through 44).

Regarding ***claim 15***, Creedon and Hassan disclose the system discussed above in claim 1, and Creedon further teaches of a data processor (user interface 105) for creating a text data signal associated with the image data signal (column 5, lines 17 through 23).

Regarding ***claim 16***, Creedon and Hassan disclose the system discussed above in claim 2, and Creedon further teaches of the image data signal is stored in a raw video format (two field buffer 120, column 4, lines 9 through 11).

Regarding ***claim 17***, Creedon and Hassan disclose the system discussed above in claim 2, and Hassan further teaches of the image data signal is stored in a compressed format (column 4, lines 43 through 48, and column 6, lines 43 through 50). Therefore, it would have been obvious to

a person of ordinary skill in the art at the time the invention was made to include Hassan's further teachings in Creedon's system. Creedon's system would become more efficient with the addition of Hassan's teachings, as less memory would be needed to store the signal, as recognized by Hassan.

Regarding ***claim 19***, Creedon and Hassan disclose the system discussed above in claim 1, and Creedon further teaches of the remote receiving station is a standard bi-level facsimile machine (facsimile receiver 110, column 1, lines 53 through column 2, line 9, and column 3, lines 41 through 44) and the image data signal is generated in a standard bi-level facsimile machine format and protocol (column 4, line 66 through column 5, line 10).

Regarding ***claim 21***, Creedon and Hassan disclose the system discussed above in claim 1, and Hassan further teaches of the remote receiving station is a color facsimile machine (column 7, line 1) and the image data signal is generated in a full color format and protocol (column 6, line 62 through column 7, line 2). Therefore, it would have been obvious to a person of ordinary skill in the art at the time the invention was made to include Hassan's further teachings in Creedon's system. Creedon's system would become more user friendly with the addition of Hassan's teachings, as a user would be able to transmit the image in various protocols, depending on the receiver, as recognized by Hassan.

Regarding ***claim 22***, Creedon and Hassan disclose the system discussed above in claim 1, and Hassan further teaches of the remote receiving station is a digital device and the image data is digital (column 4, line 65 through column 5, line 9). Therefore, it would have been obvious to a

person of ordinary skill in the art at the time the invention was made to include Hassan's further teachings in Creedon's system. Creedon's system would become more user friendly with the addition of Hassan's teachings, as a user would be able to transmit the image in various protocols, depending on the receiver, as recognized by Hassan.

Regarding ***claim 23***, Creedon and Hassan disclose the system discussed above in claim 1, and Hassan further teaches of a self-contained power source for powering the system (column 5, lines 23 through 25). Therefore, it would have been obvious to a person of ordinary skill in the art at the time the invention was made to include Hassan's further teachings in Creedon's system. Creedon's system would become more versatile with the addition of Hassan's teachings, as the unit would include a battery, thereby being mobile, as recognized by Hassan.

Regarding ***claim 27***, Creedon and Hassan disclose the system discussed above in claim 1, and Hassan further teaches of the camera may be controlled to capture a plurality of images in controlled order (column 6, lines 43 through 62). Therefore, it would have been obvious to a person of ordinary skill in the art at the time the invention was made to include Hassan's further teachings in Creedon's system. Creedon's system would become more versatile with the addition of Hassan's teachings, as the system would be able to capture images in a short period of time, as recognized by Hassan.

32. **Claim 9** is rejected under 35 U.S.C. 103(a) as being unpatentable over Creedon *et al.* (U.S. Patent Number 5,235,432, cited in the IDS filed 5/26/98) in view of Hassan *et al.* (U.S. Patent Number 5,550,646, cited in the Office action dated 12/7/99), and further in view of Parulski *et al.* (U.S. Patent Number 5,666,159, cited in the Office action dated 12/7/99).

Regarding ***claim 9***, Creedon and Hassan disclose the system discussed above in claim 2, and Hassan further teaches of the system includes a view screen for viewing the captured and stored image (LCD display 215, column 4, lines 19 through 31). However, Hassan fails to specifically teach of the cellular telephone including a view screen for viewing the captured and stored image. Parulski discloses a self-contained wireless image processing system (see Figs. 1 through 9, along with column 2, line 42 through column 5, line 5) for capturing a visual image at a first location (still image, column 2, lines 58 through 60) and transmitting it via a cellular telephone (RF transmitter module 14) to a remote receiving station (receiver units, seen in Fig. 1), with the system comprising the cellular telephone including a view screen for viewing the captured and stored image (column 2, line 42 through column 5, line 5, and column 4, lines 26 through 40). Therefore, it would have been obvious to a person of ordinary skill in the art at the time the invention was made to include Parulski's teachings in Creedon and Hassan's system. Creedon and Hassan's system would become more user friendly with the addition of Parulski's teachings, as the user would be able to view the information which was captured, and which will be transmitted to a receiver.

33. **Claims 14, 24 through 26, and 28** are rejected under 35 U.S.C. 103(a) as being unpatentable over Creedon *et al.* (U.S. Patent Number 5,235,432, cited in the IDS filed 5/26/98) in view of Hassan *et al.* (U.S. Patent Number 5,550,646, cited in the Office action dated 12/7/99), and further in view of Shibata *et al.* (U.S. Patent Number 5,689,300, cited in the Office action dated 12/7/99).

Regarding ***claim 14***, Creedon and Hassan disclose the system discussed above in claim 1, but fail to teach of including an audio capture device. Shibata discloses a self-contained image processing system for capturing a visual image and transmitting it to a remote receiving station (column 2, line 22 through column 3, line 3), with the system comprising a camera (camera 1, column 6, lines 33 through 38), a processor for generating a data signal representing the image (control unit 26, column 5, line 64 through column 6, line 12, and column 6, lines 39 through 46), a communications device adapted for transmitting the data signal to the remote receiving station (G3-FAX modular jack 107 and G3-FAX interface 16, column 7, lines 10 through 25, and column 10, line 45 through column 11, line 21), and a subprocessor (multiplexor/demultiplexor 20) for generating a Group-III facsimile compatible signal representing the data signal (column 6, lines 13 through 24). Further, Shibata teaches of an audio signal capture device (hands-free microphone 14, handset 15, or external microphone 108) adapted for capturing an audio signal in correlation with the captured video signal (column 6, lines 47 through 65). Therefore, it would have been obvious to a person of ordinary skill in the art at the time the invention was made to include Shibata's teachings in Creedon and Hassan's system. Creedon and Hassan's system would be

more versatile with the addition of Shibata's teachings, as receiver would be able to retrieve the video, along with a correlated audio signal, for a full indication of the event captured by the video camera.

Regarding ***claim 24***, Creedon and Hassan disclose the system discussed above in claim 1, but fail to teach of a control apparatus for remotely controlling operating functions of the camera. Shibata discloses a system which includes a control apparatus (control keyboard 2002, seen in Figs. 20A and 22) for remotely controlling operating functions of a camera (column 19, line 26 through column 12). Therefore, it would have been obvious to a person of ordinary skill in the art at the time the invention was made to include Shibata's teachings in Creedon and Hassan's system. Creedon and Hassan's system would be more user friendly with the addition of Shibata's teachings, as a user would be able to remotely control the operations of the camera.

Regarding ***claim 25***, Creedon, Hassan, and Shibata disclose the system discussed above in claim 24, and Shibata further teaches of the camera having a shuttered lens (column 15, lines 3 through 7, and camera 1, which outputs still pictures, column 8, lines 3 through 13) and where the control apparatus controlling any combination of lens direction, iris, focus, and shutter speed (column 11, lines 50 through 63, and column 19, lines 1 through 50). Therefore, it would have been obvious to a person of ordinary skill in the art at the time the invention was made to include Shibata's teachings in Creedon and Hassan's system. Creedon and Hassan's system would be more user friendly with the addition of Shibata's teachings, as a user would be able to remotely control the operations of the camera.

Regarding ***claim 26***, Creedon and Hassan disclose the system discussed above in claim 1, but fail to teach of an input device for controlling the processor from a remote location. Shibata discloses a system which includes an input device (control keyboard 2002, seen in Figs. 20A and 22) for controlling a processor configuration from a remote location (column 19, line 26 through column 12). Therefore, it would have been obvious to a person of ordinary skill in the art at the time the invention was made to include Shibata's teachings in Creedon and Hassan's system. Creedon and Hassan's system would be more user friendly with the addition of Shibata's teachings, as a user would be able to remotely control the operations of the system.

Regarding ***claim 28***, Creedon, Hassan, and Shibata disclose the system discussed above in claim 26, and Hassan further teaches of the camera may be controlled to capture a plurality of images in controlled order (column 6, lines 43 through 62). Therefore, it would have been obvious to a person of ordinary skill in the art at the time the invention was made to include Hassan's further teachings in Creedon's system. Creedon's system would become more versatile with the addition of Hassan's teachings, as the system would be able to capture images in a short period of time, as recognized by Hassan.

34. **Claims 18 and 20** are rejected under 35 U.S.C. 103(a) as being unpatentable over Creedon *et al.* (U.S. Patent Number 5,235,432, cited in the IDS filed 5/26/98) in view of Hassan *et al.* (U.S. Patent Number 5,550,646, cited in the Office action dated 12/7/99), and further in view of Ross (U.S. Patent Number 5,546,194, cited in the Office action dated 12/7/99).

Regarding ***claim 18***, Creedon and Hassan disclose the system discussed above in claim 2, but Creedon is unclear if the image data signal is stored in a half-tone format. Ross discloses a self-contained image processing system (see Fig. 1) for capturing a visual image and transmitting it to a remote receiving station, with the system comprising an analog video camera (video camera 10, column 3, lines 4 through 5), a processor (control system 22 in Fig. 1, or CPU 44 in Fig. 2) for generating a data signal representing the image (column 3, lines 20 through 29, and column 3, line 63 through column 4, line 20), a communications device (Group III fax transmitter 20 in Fig. 1, and fax modem 50 in Fig. 2) adapted for transmitting the data signal to the remote receiving station (column 2, lines 15 through 29, wherein the remote receiving station is inherently included in the system), and a subprocessor (Group III formatter 18) for generating a Group-III facsimile compatible signal representing the data signal (column 3, lines 30 through 52). Further, Ross teaches of the image data signal is stored in a half-tone format (column 3, lines 30 through 40). Therefore, it would have been obvious to a person of ordinary skill in the art at the time the invention was made to include Ross's teachings in Creedon and Hassan's system. Creedon's system would be more versatile with the addition of Ross's teachings, as a user would be able to

transmit half-tone images which are stored in a memory, to a receiving gray-scale facsimile machine, as recognized by Hassan.

Regarding ***claim 20***, Creedon and Hassan disclose the system discussed above in claim 1, but Creedon is unclear if the remote receiving station is a gray-scale facsimile machine. Ross discloses the system wherein the remote receiving station is a gray-scale facsimile machine (column 3, lines 30 through 41, with the receiving station inherently receives the gray-scale image, thus being a gray-scale facsimile machine) and the image data signal is generated in a gray-scale format and protocol (column 3, lines 30 through 41). Therefore, it would have been obvious to a person of ordinary skill in the art at the time the invention was made to include Ross's teachings in Creedon and Hassan's system. Creedon's system would be more versatile with the addition of Ross's teachings, as a user would be able to transmit half-tone images which are stored in a memory, to a receiving gray-scale facsimile machine, as recognized by Hassan.

Citation of Pertinent Prior Art

35. The prior art made of record and not relied upon is considered pertinent to applicant's disclosure:

Wertsberger (U.S. Patent Number 6,072,600) discloses a system wherein a camera is used to capture an image which is subsequently transmitted by facsimile.

Conclusion

36. Applicant's amendment necessitated the new ground(s) of rejection presented in this Office action. Accordingly, **THIS ACTION IS MADE FINAL.** See MPEP § 706.07(a). Applicant is reminded of the extension of time policy as set forth in 37 CFR 1.136(a).

A shortened statutory period for reply to this final action is set to expire THREE MONTHS from the mailing date of this action. In the event a first reply is filed within TWO MONTHS of the mailing date of this final action and the advisory action is not mailed until after the end of the THREE-MONTH shortened statutory period, then the shortened statutory period will expire on the date the advisory action is mailed, and any extension fee pursuant to 37 CFR 1.136(a) will be calculated from the mailing date of the advisory action. In no event, however, will the statutory period for reply expire later than SIX MONTHS from the date of this final action.

37. Any inquiry concerning this communication or earlier communications from the examiner should be directed to Joe Pokrzywa whose telephone number is (703) 305-0146. The examiner can normally be reached on Monday through Friday from 8:00 a.m. to 4:30 p.m.

If attempts to reach the examiner by telephone are unsuccessful, the examiner's supervisor, Edward Coles, can be reached on (703) 305-4712. The fax phone number for this Group is (703) 306-5406.

Any inquiry of a general nature or relating to the status of this application or proceeding should be directed to the Group receptionist whose telephone number is (703) 305-3800/4700.

Joseph R. Pokrzywa

August 15, 2000

EDWARD L. COLES
SUPERVISORY PATENT EXAMINER
GROUP 2700

Notice of References Cited

Application No.	Applicant(s)		
09/006,073	Monroe, David A.		
Examiner		Group Art Unit	Page 1 of 1
Joseph Pokrzywa		2722	

U.S. PATENT DOCUMENTS

*		DOCUMENT NO.	DATE	NAME	CLASS	SUBCLASS
x	A	5,546,194	8/1996	Ross	358	445
x	B	5,550,646	8/1996	Hassan et al.	358	442
x	C	5,689,300	11/1997	Shibata et al.	348	15
x	D	5,666,159	9/1997	Parulski et al.	348	211
x	E	5,235,432	8/1993	Creedon et al.	358	479
	F	6,072,600	6/2000	Wertsberger	358	479
	G					
	H					
	I					
	J					
	K					
	L					
	M					

FOREIGN PATENT DOCUMENTS

*		DOCUMENT NO.	DATE	COUNTRY	NAME	CLASS	SUBCLASS
	N						
	O						
	P						
	Q						
	R						
	S						
	T						

NON-PATENT DOCUMENTS

*		DOCUMENT (Including Author, Title, Source, and Pertinent Pages)	DATE
	U		
	V		
	W		
	X		

* A copy of this reference is not being furnished with this Office action.
(See Manual of Patent Examining Procedure, Section 707.05(a).)

Kyocera Ex. 1012
p. 170

OIPE JC134
FEB 2 1 2001
PATENT & TRADEMARK OFFICE

2622
#10
3-2-01

PATENT

IN THE UNITED STATES PATENT AND TRADEMARK OFFICE

Application of:

DAVID A. MONROE

Serial No.: 09/006,073

Filed: January 12, 1998

For: APPARATUS FOR CAPTURING, CONVERTING AND TRANSMITTING A VISUAL IMAGE SIGNAL VIA A DIGITAL TRANSMISSION SYSTEM

CERTIFICATE OF MAILING

I hereby certify that this correspondence is being deposited with the United States Postal Service as First Class Mail in an envelope addressed to: COMMISSIONER OF PATENTS AND TRADEMARKS, Washington, D.C. 20231, this 21st. day of February, 2001.

Barbara Kobza

Barbara Kobza

RECEIVED
MAR 0 2 2001
Technology Center 2600

REQUEST FOR THREE-MONTH EXTENSION OF TIME

HONORABLE COMMISSIONER
OF PATENTS AND TRADEMARKS
Box: Fee
Washington, D.C. 20231

Sir:

Responsive to the Office Action dated August 29, 2001 a three-month extension of time is hereby requested in the above-identified application. The requisite extension fee of $445.00 is attached.

02/28/2001 EHAILE1 00000015 09006073
01 FC:217 445.00 OP

01 JC134
FEB 2 1 2001
PATENT & TRADEMARK OFFICE

Application of
David A. Monroe

RECEIVED
MAR 0 2 2001
Technology Center 2600

Serial No. 09/006,073

The Commissioner is hereby authorized to charge any additional fees in this application under 35 C.F.R. §1.16 or §1.17 to **Deposit Account No. 50-0259**. An additional copy of this Request for Extension of Time is attached.

Respectfully submitted,

Stephen F. Schlather
Registration No. 45,081

BRACEWELL & PATTERSON, L.L.P.
711 Louisiana, Suite 2900
Houston, Texas 77002
(713) 221-1339
Fax (713) 223-2141
Attorney Docket No. 069834.000024

UNITED ST. ES DEPARTMENT OF COMMERCE
Patent and Trademark Office
Address: COMMISSIONER OF PATENTS AND TRADEMARKS
Washington, D.C. 20231

APPLICATION NO.	FILING DATE	FIRST NAMED INVENTOR	ATTORNEY DOCKET NO.
09/006,073	01/12/98	MONROE	D 58959.12

WM31/0410

BRACEWELL & PATTERSON
SOUTH TOWER PENNZOIL PLACE
711 LOUISANA STREET SUITE 2900
HOUSTON TX 77002-2781

EXAMINER	
POKRZYWA, J	
ART UNIT	**PAPER NUMBER**
2622	11

DATE MAILED: 04/10/01

Please find below and/or attached an Office communication concerning this application or proceeding.

Commissioner of Patents and Trademarks

PTO-90C (Rev. 2/95)

U.S. G.P.O. 2000 ; 465-188/25266

1- File Copy

Notice of Abandonment	Application No.	Applicant(s)	
	09/006,073	MONROE, DAVID A.	
	Examiner	Art Unit	
	Joseph R. Pokrzywa	2622	

-- The MAILING DATE of this communication appears on the cover sheet with the correspondence address--

This application is abandoned in view of:

1. ☒ Applicant's failure to timely file a proper reply to the Office letter mailed on *29 August 2000*.
   (a) ☐ A reply was received on _____ (with a Certificate of Mailing or Transmission dated _____), which is after the expiration of the period for reply (including a total extension of time of _____ month(s)) which expired on _____.
   (b) ☐ A proposed reply was received on _____, but it does not constitute a proper reply under 37 CRF 1.113 (a) to the final rejection.
   (A proper reply under 37 CRF 1.113 to a final rejection consists only of: (1) a timely filed amendment which places the application in condition for allowance; (2) a timely filed Notice of Appeal (with appeal fee); or (3) a timely filed Request for Continued Examination (RCE) in compliance with 37 CFR 1.114).
   (c) ☒ No reply has been received.

2. ☐ Applicant's failure to timely pay the required issue fee and publication fee, if applicable, within the statutory period of three months from the mailing date of the Notice of Allowance (PTOL-85).
   (a) ☐ The issue fee and publication fee, if applicable, was received on _____ (with a Certificate of Mailing or Transmission dated __), which is after the expiration of the statutory period for payment of the issue fee (and publication fee) set in the Notice of Allowance.
   (b) ☐ The submitted fee of $_____ is insufficient. A balance of $_____ is due.
   The issue fee required by 37 CFR 1.18 is $_____. The publication fee, if required by 37 CFR 1.18(d), is $_____.
   (c) ☐ The issue fee and publication fee, if applicable, has not been received.

3. ☐ Applicant's failure to timely file new formal drawings as required by, and within the three-month period set in, the Notice of Allowability (PTO-37).
   (a) ☐ Proposed new formal drawings were received on _____ (with a Certificate of Mailing or Transmission dated _____), which is after the expiration of the period for reply.
   (b) ☐ The proposed new formal drawings filed on _____ are not acceptable and the period for reply has expired.
   (c) ☐ No proposed new formal drawings have been received.

4. ☐ The letter of express abandonment which is signed by the attorney or agent of record, the assignee of the entire interest, or all of the applicants.

5. ☐ The letter of express abandonment which is signed by an attorney or agent (acting in a representative capacity under 37 CFR 1.34(a)) upon the filing of a continuing application.

6. ☐ The decision by the Board of Patent Appeals and Interference rendered on _____ and because the period for seeking court review of the decision has expired and there are no allowed claims.

7. ☐ The reason(s) below:

EDWARD COLES
SUPERVISORY PATENT EXAMINER
TEC

Kyocera Ex. 1012
p. 174

DETAILED ACTION

Abandonment

1. This application is abandoned in view of applicant's failure to submit a reply to the Office Action mailed on 8/29/00 within the required period for reply.

Conclusion

2. Any inquiry concerning this communication or earlier communications from the examiner should be directed to Joe Pokrzywa whose telephone number is (703) 305-0146. The examiner can normally be reached on Monday-Friday, 8:30-5:00.

If attempts to reach the examiner by telephone are unsuccessful, the examiner's supervisor, Edward L. Coles can be reached on (703) 305-4712. The fax phone numbers for the organization where this application or proceeding is assigned are (703) 306-5406 for regular communications and (703) 306-5406 for After Final communications.

Any inquiry of a general nature or relating to the status of this application or proceeding should be directed to the receptionist whose telephone number is (703) 305-4700.

Joseph R. Pokrzywa
Examiner
Art Unit 2622

jrp
April 3, 2001

EDWARD COLES
SUPERVISORY PATENT

01-06-03

#12

PTO/SB/64 (10-01)
Approved for use through 10/31/2002. OMB 0651-0031
U.S. Patent and Trademark Office; U.S. DEPARTMENT OF COMMERCE
Under the Paperwork Reduction Act of 1995, no persons are required to respond to a collection of information unless it displays a valid OMB control number.

TYPE JC87
JAN 03 2003
PATENT & TRADEMARK OFFICE

PETITION FOR REVIVAL OF AN APPLICATION FOR PATENT ABANDONED UNINTENTIONALLY UNDER 37 CFR 1.137(b)	Docket Number (Optional) P-121817.02.024

First named inventor: David A. Monroe

Application No.: 09/006,073 Group Art Unit: 2622

Filed: January 12, 1998 Examiner: J. Pokrzywa

Title: Apparatus For Capturing, Converting and Transmitting A Visual Image Signal Via A Digital Transmission System.

Attention: Office of Petitions
Assistant Commissioner for Patents
Box DAC
Washington, D.C. 20231

NOTE: If information or assistance is needed in completing this form, please contact Petitions Information at (703)305-9282.

The above-identified application became abandoned for failure to file a timely and proper reply to a notice or action by the United States Patent and Trademark Office. The date of abandonment is the day after the expiration date of the period set for reply in the Office notice or action plus any extensions of time actually obtained.

APPLICANT HEREBY PETITIONS FOR REVIVAL OF THIS APPLICATION

NOTE: A grantable petition requires the following items:
(1) Petition fee;
(2) Reply and/or issue fee;
(3) Terminal disclaimer with disclaimer fee -- required for all utility and plant applications filed before June 8, 1995; and for all design applications; and
(4) Statement that the entire delay was unintentional.

1. Petition fee
☐ Small entity - fee $_____ (37 CFR 1.17(m)). Applicant claims small entity status. See 37 CFR 1.27.

☒ Other than small entity - fee $1,300.00 (37 CFR 1.17(m))

2. Reply and/or fee

A. The reply and/or fee to the above-noted Office action in the form of a continuing application as provided by 37 CFR 1.137(c) (identify type of reply):
☐ has been filed previously on _____ .
☒ is enclosed herewith.

B. The issue fee of $ _____
☐ has been paid previously on _____ .
☐ is enclosed herewith.

Burden Hour Statement: This form is estimated to take 1.0 hour to complete. Time will vary depending upon the needs of the individual case. Any comments on the amount of time you are required to complete this form should be sent to the Chief Information Officer, U.S. Patent and Trademark Office, Washington, DC 20231. DO NOT SEND FEES OR COMPLETED FORMS TO THIS ADDRESS. SEND TO: Assistant Commissioner for Patents, Washington, DC 20231.

01/07/2003 ANABI1 00000015 09006073
01 FC:1453 1300.00 OP
Void date: 01/07/2003 ANABI1
01/07/2003 ANABI1 00000015 09006073
01 FC:1453 -1300.00 OP

RECEIVED
JAN 16 2003
OFFICE OF PETITIONS

01/07/2003 ANABI1 00000016 09006073
01 FC:1453 1300.00 OP

3. Terminal disclaimer with disclaimer fee

☒ Since this utility/plant application was filed on or after June 8, 1995, no terminal disclaimer is required.

☐ A terminal disclaimer (and disclaimer fee (37 CFR 1.20(d)) of $_____ for a small entity or $_____ for other than a small entity) disclaiming a period equivalent to the period of abandonment is enclosed herewith (see PTO/SB/63).

4. Statement. The entire delay in filing the required reply from the due date for the required reply until the filing of a grantable petition under 37 CFR 1.137(b) was unintentional. [NOTE: The United States Patent and Trademark Office may require additional information if there is a question as to whether either the abandonment or the delay in filing a petition under 37 CFR 1.137(b) was unintentional (MPEP 711.03(c)(III)(C) and (D))].

WARNING: Information on this form may become public. Credit card information should not be included on this form. Provide credit card information and authorization on PTO-2038.

1-3-03

Date

Signature

Telephone Number: (210) 978-7700

Richard R. Ruble, Reg. 45,720

Typed or printed name

JACKSON WALKER L.L.P.

112 E. Pecan St., Suite 2100

San Antonio, Texas 78205

Address

Enclosures: ☒ Fee Payment
☒ Reply
☐ Terminal Disclaimer Form
☐ Additional sheets containing statements establishing unintentional delay
☐ Other : _____

CERTIFICATE OF MAILING OR TRANSMISSION [37 CFR 1.8(A)]

I hereby certify that this correspondence is being:

☒ deposited with the United States Postal Service on the date shown below with sufficient postage as first class mail in an envelope addressed to: Assistant Commissioner for Patents, Box DAC, Washington, D.C. 20231.

☐ transmitted by facsimile on the date shown below to the Patent and Trademark Office at (703) 308-6916.

Express mail
EL692001045US

Date
1-3-03

Bianca Grossweiler

Signature

Bianca Grossweiler

Typed or printed name of person signing certificate

UNITED STATES PATENT AND TRADEMARK OFFICE

COMMISSIONER FOR PATENTS
UNITED STATES PATENT AND TRADEMARK OFFICE
WASHINGTON, D.C. 20231
www.uspto.gov

Paper No. 13

Bracewell & Patterson
South Tower Pennzoil Place
711 Louisana Street, Suite 2900
Houston, TX 77002-2781

COPY MAILED

MAR 1 1 2003

OFFICE OF PETITIONS

In re Application of :
David A. Monroe :
Application No. 09/006,073 : ON PETITION
Filed: January 12, 1998 :
Attorney Docket No. P-121817-02.024 :

This is a decision on the petition under 37 CFR 1.137(b), filed January 3, 2003, to revive the above-identified application.

The above-identified application became abandoned for failure to reply within the meaning of 37 CFR 1.113 in a timely manner to the final Office action mailed August 29, 2000, which set a shortened statutory period for reply of three(3) months. A three (3) months extension of time under the provisions of 37 CFR 1.136(a) was obtained. Accordingly, the application became abandoned on March 1, 2001.

It is not apparent whether the person signing the statement of unintentional delay was in a position to have firsthand or direct knowledge of the facts and circumstances of the delay at issue. Nevertheless, such statement is being treated as having been made as the result of a reasonable inquiry into the facts and circumstances of such delay. See 37 CFR 10.18(b) and Changes to Patent Practice and Procedure; Final Rule Notice, 62 Fed. Reg. 53131, 53178 (October 10, 1997), 1203 Off. Gaz. Pat. Office 63, 103 (October 21, 1997). In the event that such an inquiry has not been made, petitioner must make such an inquiry. If such inquiry results in the discovery that it is not correct that the entire delay in filing the required reply from the due date for the reply until the filing of a grantable petition pursuant to 37 CFR 1.137(b) was unintentional, petitioner must notify the Office.

There is no indication that the person signing the instant petition was ever given a power of attorney or authorization of agent to prosecute the above-identified application. If the person signing the instant petition desires to receive future correspondence regarding this application, the appropriate power of attorney or authorization of agent must be submitted. While a courtesy copy of this decision is being mailed to the person signing the instant petition, all future correspondence will be directed to the address of currently of record until such time as appropriate instructions are received to the contrary.

This application is being revived solely for purposes of continuity. As continuity has been established by this decision, the application is again abandoned in favor of continuing application No. 10/125,321.

Telephone inquiries concerning this decision should be directed to Cheryl Gibson-Baylor at (703)308-5111, or in her absence, Sherry Brinkley at (703)305-9220.

The application file is being forwarded to Technology Center 3700, Art Unit 3749.

Cheryl Gibson-Baylor
Petitions Examiner
Office of Petitions
Office of the Deputy Commissioner
for Patent Examination Policy

Sherry Brinkley
Petitions Examiner

cc: Richard R. Ruble
Jackson, Walker LLP
112 E. Pecan St., Suite 2100
San Antonio, Texas 78205

PTO/SB/68 (06-09)
Approved for use through 07/31/2009. OMB 0651-0031
U.S. Patent and Trademark Office; U.S. DEPARTMENT OF COMMERCE
Under the Paperwork Reduction Act of 1995, no persons are required to respond to a collection of information unless it displays a valid OMB control number.

REQUEST FOR ACCESS TO AN ABANDONED APPLICATION UNDER 37 CFR 1.14

Bring completed form to:
File Information Unit, Room 2E04
2900 Crystal Drive
Arlington, VA 22202-3514

Telephone: (703) 308-2733

In re Application of

Application Number	Filed
09/006073	Jan 12, 1998

Paper No. 14

I hereby request access under 37 CFR 1.14(a)(1)(iv) to the application file record of the above-identified ABANDONED application, which is not within the file jacket of a pending Continued Prosecution Application (CPA) (37 CFR 1.53(d)) and which is identified in, or to which a benefit is claimed, in the following document (as shown in the attachment):

United States Patent Application Publication No. _____, page, _____ line _____,

United States Patent Number 5365871, column _____, line, _____ or

WIPO Pub. No. _____, page _____, line _____.

Related Information About Access to Applications Maintained in the Image File Wrapper System (IFW) and Access to Pending Applications in General

A member of the public, acting without a power to inspect, cannot order applications maintained in the IFW system through the FIU. If the member of the public is entitled to a copy of the application file, then the file is made available through the Public Patent Application Information Retrieval system (Public PAIR) on the USPTO internet web site (www.uspto.gov). Terminals that allow access to Public PAIR are available in the Public Search Room. The member of the public may also be entitled to obtain a copy of all or part of the application file upon payment of the appropriate fee. Such copies must be purchased through the **Office of Public Records** upon payment of the appropriate fee (37 CFR 1.19(b)).

For **published** applications that are still pending, a member of the public may obtain **a copy** of: the file contents; the pending application as originally filed; or any document in the file of the pending application.

For **unpublished** applications that are still pending:

(1) If the benefit of the pending application is claimed under 35 U.S.C. 119(e), 120, 121, or 365 in another application that has: (a) issued as a U.S. patent, or (b) published as a statutory invention registration, a U.S. patent application publication, or an international patent application publication in accordance with PCT Article 21(2), a member of the public may obtain **a copy** of: the file contents; the pending application as originally filed; or any document in the file of the pending application.

(2) If the application is incorporated by reference or otherwise identified in a U.S. patent, a statutory invention registration, a U.S. patent application publication, or an international patent application publication in accordance with PCT Article 21(2), a member of the public may obtain **a copy** of the pending application as originally filed.

RECEIVED
NOV 06 2009
File Information Unit

S. Gonzalez
Signature

11·6·09
Date

Sal Gonzalez
Typed or printed name

Registration Number, if applicable

703·579·1820
Telephone Number

FOR PTO USE ONLY

Approved by: _____ Initials

Unit: _____

RECEIVED
NOV 06 2009
File Information Unit

This collection of information is required by 37 CFR 1.11 and 1.14. The information is required to obtain or retain a benefit by the public which is to file (and by the USPTO to process) an application. Confidentiality is governed by 35 U.S.C. 122 and 37 CFR 1.11 and 1.14. This collection is estimated to take 12 minutes to complete, including gathering, preparing, and submitting the completed application form to the USPTO. Time will vary depending upon the individual case. Any comments on the amount of time you require to complete this form and/or suggestions for reducing this burden, should be sent to the Chief Information Officer, U.S. Patent and Trademark Office, U.S. Department of Commerce, P.O. Box 1450, Alexandria, VA 22313-1450. DO NOT SEND FEES OR COMPLETED FORMS TO THIS ADDRESS. **BRING TO: File Information Unit, Room 2E04, 2900 Crystal Drive, Arlington, Virginia.**

If you need assistance in completing the form, call 1-800-PTO-9199 and select option 2.

PTO/SB/68 (04-07)
Approved for use through 9/30/2007, OMB 0651-0031
U.S. Patent and Trademark Office; U.S. DEPARTMENT OF COMMERCE
Under the Paperwork Reduction Act of 1995, no persons are required to respond to a collection of information unless it displays a valid OMB control number.

REQUEST FOR ACCESS TO AN ABANDONED APPLICATION UNDER 37 CFR 1.14

Bring completed form to:
File Information Unit, Room 2E04
2900 Crystal Drive
Arlington, VA 22202-3514

Telephone: (703) 308-2733

In re Application of

Application Number	Filed
09-006073	1-12-98

Paper No. 15

I hereby request access under 37 CFR 1.14(a)(1)(iv) to the application file record of the above-identified ABANDONED application, which is not within the file jacket of a pending Continued Prosecution Application (CPA) (37 CFR 1.53(d)) and which is identified in, or to which a benefit is claimed, in the following document (as shown in the attachment):

United States Patent Application Publication No. _____, page, _____ line _____,

United States Patent Number 7345871, column _____, line, _____ or

WIPO Pub. No. _____, page _____, line _____.

Related Information About Access to Applications Maintained in the Image File Wrapper System (IFW) and Access to Pending Applications in General

A member of the public, acting without a power to inspect, cannot order applications maintained in the IFW system through the FIU. *If the member of the public is entitled to a copy of the application file, then the file is made* available through the Public Patent Application Information Retrieval system (Public PAIR) on the USPTO internet web site (www.uspto.gov). Terminals that allow access to Public PAIR are available in the Public Search Room. The member of the public may also be entitled to obtain a copy of all or part of the application file upon payment of the appropriate fee. Such copies must be purchased through the Office of Public Records upon payment of the appropriate fee (37 CFR 1.19(b)).

For published applications that are still pending, a member of the public may obtain a copy of:
the file contents; the pending application as originally filed; or any document in the file of the pending application.

For unpublished applications that are still pending:

(1) If the benefit of the pending application is claimed under 35 U.S.C. 119(e), 120, 121, or 365 in another application that has: (a) issued as a U.S. patent, or (b) published as a statutory invention registration, a U.S. patent application publication, or an international patent application publication in accordance with PCT Article 21(2), a member of the public may obtain a copy of: the file contents; the pending application as originally filed; or any document in the file of the pending application.

(2) If the application is incorporated by reference or otherwise identified in a U.S. patent, a statutory invention registration, a U.S. patent application publication, or an international patent application publication in accordance with PCT Article 21(2), a member of the public may obtain a copy of the pending application as originally filed.

[signature] 12-17-13
Signature Date

Ingrid Ahlke
Typed or printed name

Registration Number, if applicable

202-345-8845
Telephone Number

FOR PTO USE ONLY
RECEIVED
Approved by: DEC 17 2018 (Initials)
Unit: AE
BY:

This collection of information is required by 37 CFR 1.11 and 1.14. The information is required to obtain or retain a benefit by the public which is to file (and by the USPTO to process) an application. Confidentiality is governed by 35 U.S.C. 122 and 37 CFR 1.11 and 1.14. This collection is estimated to take 12 minutes to complete, including gathering, preparing, and submitting the completed application form to the USPTO. Time will vary depending upon the individual case. Any comments on the amount of time you require to complete this form and/or suggestions for reducing this burden, should be sent to the Chief Information Officer, U.S. Patent and Trademark Office, U.S. Department of Commerce, P.O. Box 1450, Alexandria, VA 22313-1450. DO NOT SEND FEES OR COMPLETED FORMS TO THIS ADDRESS. BRING TO: File Information Unit, Room 2E04, 2900 Crystal Drive, Arlington, VA 22202-3514.

PTO/SB/63 (04-07)
Approved for use through 9/30/2007. OMB 0651-0031
U.S. Patent and Trademark Office; U.S. DEPARTMENT OF COMMERCE
Under the Paperwork Reduction Act of 1995, no persons are required to respond to a collection of information unless it displays a valid OMB control number.

REQUEST FOR ACCESS TO AN ABANDONED APPLICATION UNDER 37 CFR 1.14

RECEIVED
JAN 15 2014

Bring completed form to:
File Information Unit, Room 2E04
2900 Crystal Drive
Arlington, VA 22202-3514
BY:
Telephone: (703) 308-2733

In re Application of

Application Number	Filed
09/006,073	Jan. 12, 1998

Paper No. 16

I hereby request access under 37 CFR 1.14(a)(1)(iv) to the application file record of the above-identified ABANDONED application, which is not within the file jacket of a pending Continued Prosecution Application (CPA) (37 CFR 1.53(d)) and which is identified in, or to which a benefit is claimed, in the following document (as shown in the attachment):

United States Patent Application Publication No. _____, page, _____ line _____,

United States Patent Number 7365871, column _____, line, _____ or

WIPO Pub. No._____; page _____, line _____.

Related Information About Access to Applications Maintained in the Image File Wrapper System (IFW) and Access to Pending Applications in General

A member of the public, acting without a power to inspect, cannot order applications maintained in the IFW system through the FIU. If the member of the public is entitled to a copy of the application file, then the file is made available through the Public Patent Application Information Retrieval system (Public PAIR) on the USPTO internet web site (www.uspto.gov). Terminals that allow access to Public PAIR are available in the Public Search Room. The member of the public may also be entitled to obtain a copy of all or part of the application file upon payment of the appropriate fee. Such copies must be purchased through the Office of Public Records upon payment of the appropriate fee (37 CFR 1.19(b)).

For published applications that are still pending, a member of the public may obtain a copy of: the file contents; the pending application as originally filed; or any document in the file of the pending application.

For unpublished applications that are still pending:

(1) If the benefit of the pending application is claimed under 35 U.S.C. 119(e), 120, 121, or 365 in another application that has: (a) issued as a U.S. patent, or (b) published as a statutory invention registration, a U.S. patent application publication, or an international patent application publication in accordance with PCT Article 21(2), a member of the public may obtain a copy of: the file contents; the pending application as originally filed; or any document in the file of the pending application.

(2) If the application is incorporated by reference or otherwise identified in a U.S. patent, a statutory invention registration, a U.S. patent application publication, or an international patent application publication in accordance with PCT Article 21(2), a member of the public may obtain a copy of the pending application as originally filed.

Alexander Wolbarsht — 1/14/2014

Signature — Date

Alexander Wolbarsht

Typed or printed name

703-519-1820

Registration Number, if applicable

Telephone Number

FOR PTO USE ONLY

Approved by: _____ (initials)

Unit: _____

This collection of information is required by 37 CFR 1.11 and 1.14. The information is required to obtain or retain a benefit by the public which is to file (and by the USPTO to process) an application. Confidentiality is governed by 35 U.S.C. 122 and 37 CFR 1.11 and 1.14. This collection is estimated to take 12 minutes to complete, including gathering, preparing, and submitting the completed application form to the USPTO. Time will vary depending upon the individual case. Any comments on the amount of time you require to complete this form and/or suggestions for reducing this burden, should be sent to the Chief Information Officer, U.S. Patent and Trademark Office, U.S. Department of Commerce, P.O. Box 1450, Alexandria, VA 22313-1450. DO NOT SEND FEES OR COMPLETED FORMS TO THIS ADDRESS. BRING TO: File Information Unit, Room 2E04, 2900 Crystal Drive, Arlington, VA 22202-3514

PTO/SB/68 (04-07)
Approved for use through 9/30/2007. OMB 0651-0031
U.S. Patent and Trademark Office; U.S. DEPARTMENT OF COMMERCE
Under the Paperwork Reduction Act of 1995, no persons are required to respond to a collection of information unless it displays a valid OMB control number.

REQUEST FOR ACCESS TO AN ABANDONED APPLICATION UNDER 37 CFR 1.14

Bring completed form to:
File Information Unit, Room 2E04
2900 Crystal Drive
Arlington, VA 22202-3514

Telephone: (703) 308-2733

In re Application of
monroe

Application Number	Filed
09/006073	1, 12 98

FEB 2 6 2014

Paper No. 17

I hereby request access under 37 CFR 1.14(a)(1)(iv) to the application file record of the above-identified ABANDONED application, which is not within the file jacket of a pending Continued Prosecution Application (CPA) (37 CFR 1.53(d)) and which is identified in, or to which a benefit is claimed, in the following document (as shown in the attachment):

United States Patent Application Publication No. _____, page, _____ line _____,

United States Patent Number 7365871, column _____, line, _____ or

WIPO Pub. No._____, page _____, line _____.

Related Information About Access to Applications Maintained in the Image File Wrapper System (IFW) and Access to Pending Applications in General

A member of the public, acting without a power to inspect, cannot order applications maintained in the IFW system through the FIU. If the member of the public is entitled to a copy of the application file, then the file is made available through the Public Patent Application Information Retrieval system (Public PAIR) on the USPTO internet web site (www.uspto.gov). Terminals that allow access to Public PAIR are available in the Public Search Room. The member of the public may also be entitled to obtain a copy of all or part of the application file upon payment of the appropriate fee. Such copies must be purchased through the Office of Public Records upon payment of the appropriate fee (37 CFR 1.19(b)).

For published applications that are still pending, a member of the public may obtain a copy of: the file contents; the pending application as originally filed; or any document in the file of the pending application.

For unpublished applications that are still pending:

(1) If the benefit of the pending application is claimed under 35 U.S.C. 119(e), 120, 121, or 365 in another application that has: (a) issued as a U.S. patent, or (b) published as a statutory invention registration, a U.S. patent application publication, or an international patent application publication in accordance with PCT Article 21(2), a member of the public may obtain a copy of: the file contents; the pending application as originally filed; or any document in the file of the pending application.

(2) If the application is incorporated by reference or otherwise identified in a U.S. patent, a statutory invention registration, a U.S. patent application publication, or an international patent application publication in accordance with PCT Article 21(2), a member of the public may obtain a copy of the pending application as originally filed.

Thomas 14PO
Signature

2-25-14
Date

Thomas 14PO
Typed or printed name

Registration Number, if applicable

571/213-3819
Telephone Number

FOR PTO USE ONLY

Approved by: _____ FEB (initials)

Unit: _____

This collection of information is required by 37 CFR 1.11 and 1.14. The information is required to obtain or retain a benefit by the public which is to file (and by the USPTO to process) an application. Confidentiality is governed by 35 U.S.C. 122 and 37 CFR 1.11 and 1.14. This collection is estimated to take 12 minutes to complete, including gathering, preparing, and submitting the completed application form to the USPTO. Time will vary depending upon the individual case. Any comments on the amount of time you require to complete this form and/or suggestions for reducing this burden, should be sent to the Chief Information Officer, U.S. Patent and Trademark Office, U.S. Department of Commerce, P.O. Box 1450, Alexandria, VA 22313-1450. DO NOT SEND FEES OR COMPLETED FORMS TO THIS ADDRESS. BRING TO: File Information Unit, Room 2E04, 2900 Crystal Drive, Arlington, VA

PTO/SB/68 (04-07)
Approved for use through 9/30/2007. OMB 0651-0031
U.S. Patent and Trademark Office; U.S. DEPARTMENT OF COMMERCE
Under the Paperwork Reduction Act of 1995, no persons are required to respond to a collection of information unless it displays a valid OMB control number.

REQUEST FOR ACCESS TO AN ABANDONED APPLICATION UNDER 37 CFR 1.14

Bring completed form to:
File Information Unit, Room 2E04
2900 Crystal Drive
Arlington, VA 22202-3514

Telephone: (703) 308-2733

FEB 2 8 2014

In re Application of: Monroe

Application Number	Filed
09/006073	Jan, 12-98.

Paper No. #18

I hereby request access under 37 CFR 1.14(a)(1)(iv) to the application file record of the above-identified ABANDONED application, which is not within the file jacket of a pending Continued Prosecution Application (CPA) (37 CFR 1.53(d)) and which is identified in, or to which a benefit is claimed, in the following document (as shown in the attachment):

United States Patent Application Publication No. _____, page, _____ line _____,

United States Patent Number 7365871, column _____, line, _____ or

WIPO Pub. No._____, page _____, line _____.

Related Information About Access to Applications Maintained in the Image File Wrapper System (IFW) and Access to Pending Applications in General

A member of the public, acting without a power to inspect, cannot order applications maintained in the IFW system through the FIU. If the member of the public is entitled to a copy of the application file, then the file is made available through the Public Patent Application Information Retrieval system (Public PAIR) on the USPTO internet web site (www.uspto.gov). Terminals that allow access to Public PAIR are available in the Public Search Room. The member of the public may also be entitled to obtain a copy of all or part of the application file upon payment of the appropriate fee. Such copies must be purchased through the Office of Public Records upon payment of the appropriate fee (37 CFR 1.19(b)).

For published applications that are still pending, a member of the public may obtain a copy of: the file contents; the pending application as originally filed; or any document in the file of the pending application.

For unpublished applications that are still pending:

(1) If the benefit of the pending application is claimed under 35 U.S.C. 119(e), 120, 121, or 365 in another application that has: (a) issued as a U.S. patent, or (b) published as a statutory invention registration, a U.S. patent application publication, or an international patent application publication in accordance with PCT Article 21(2), a member of the public may obtain a copy of: the file contents; the pending application as originally filed; or any document in the file of the pending application.

(2) If the application is incorporated by reference or otherwise identified in a U.S. patent, a statutory invention registration, a U.S. patent application publication, or an international patent application publication in accordance with PCT Article 21(2), a member of the public may obtain a copy of the pending application as originally filed.

Kellin Rodriguez — Signature

2-28-14 — Date

Kellin Rodriguez — Typed or printed name

Registration Number, if applicable

(303) 642-1777 — Telephone Number

FOR PTO USE ONLY

Approved by: _____ (initials)

Unit: _____

This collection of information is required by 37 CFR 1.11 and 1.14. The information is required to obtain or retain a benefit by the public which is to file (and by the USPTO to process) an application. Confidentiality is governed by 35 U.S.C. 122 and 37 CFR 1.11 and 1.14. This collection is estimated to take 12 minutes to complete, including gathering, preparing, and submitting the completed application form to the USPTO. Time will vary depending upon the individual case. Any comments on the amount of time you require to complete this form and/or suggestions for reducing this burden, should be sent to the Chief Information Officer, U.S. Patent and Trademark Office, U.S. Department of Commerce, P.O. Box 1450, Alexandria, VA 22313-1450. DO NOT SEND FEES OR COMPLETED FORMS TO THIS ADDRESS. BRING TO: File Information Unit, Room 2E04, 2900 Crystal Drive, Arlington, VA

PTO/SB/68 (02-10)
Approved for use through 07/31/2012. OMB 0651-0031
U.S. Patent and Trademark Office; U.S. DEPARTMENT OF COMMERCE
Under the Paperwork Reduction Act of 1995, no persons are required to respond to a collection of information unless it displays a valid OMB control number.

REQUEST FOR ACCESS TO AN ABANDONED APPLICATION UNDER 37 CFR 1.14

Bring completed form to:
File Information Unit, Suite 3A20
2800 South Randolph Street
Arlington, VA 22206

Telephone: (703) 756-1800

RECEIVED
JUN 19 2014
BY:

In re Application of

Application Number	Filed
09/006,073	1/12/98

Paper No. _____

I hereby request access under 37 CFR 1.14(a)(1)(iv) to the application file record of the above-identified ABANDONED application, which is not within the file jacket of a pending Continued Prosecution Application (CPA) (37 CFR 1.53(d)) and which is identified in, or to which a benefit is claimed, in the following document (as shown in the attachment):

United States Patent Application Publication No. _____, page, _____ line _____,

United States Patent Number 7365871, column _____, line, _____.

WIPO Pub. No. _____, page _____, line _____.

Related Information About Access to Applications Maintained in the Image File Wrapper System (IFW) and Access to Pending Applications in General

A member of the public, acting without a power to inspect, cannot order applications maintained in the IFW system through the FIU. If the member of the public is entitled to a copy of the application file, then the file is made available through the Public Patent Application Information Retrieval system (Public PAIR) on the USPTO internet web site (www.uspto.gov). Terminals that allow access to Public PAIR are available in the Public Search Room. The member of the public may also be entitled to obtain a copy of all or part of the application file upon payment of the appropriate fee. Such copies must be purchased through the **Office of Public Records** upon payment of the appropriate fee (37 CFR 1.19(b)).

For **published** applications that are still pending, a member of the public may obtain **a copy** of:
the file contents; the pending application as originally filed; or any document in the file of the pending application.

For **unpublished** applications that are still pending:

(1) If the benefit of the pending application is claimed under 35 U.S.C. 119(e), 120, 121, or 365 in another application that has: (a) issued as a U.S. patent, or (b) published as a statutory invention registration, a U.S. patent application publication, or an international patent application publication in accordance with PCT Article 21(2), a member of the public may obtain **a copy** of: the file contents; the pending application as originally filed; or any document in the file of the pending application.

(2) If the application is incorporated by reference or otherwise identified in a U.S. patent, a statutory invention registration, a U.S. patent application publication, or an international patent application publication in accordance with PCT Article 21(2), a member of the public may obtain a copy of the pending application as originally filed.

Azizi Tesfay
Signature

6/20/14
Date

Azizi Tesfay
Typed of printed name

Registration Number, if applicable

703-486-1150
Telephone Number

FOR PTO USE ONLY

Approved by: RECEIVED (initials)
JUN 19 2014

Unit: _____

BY: _____

This collection of information is required by 37 CFR 1.11 and 1.14. The information is required to obtain or retain a benefit by the public which is to file (and by the USPTO to process) an application. Confidentiality is governed by 35 U.S.C. 122 and 37 CFR 1.11 and 1.14. This collection is estimated to take 12 minutes to complete, including gathering, preparing, and submitting the completed application form to the USPTO. Time will vary depending upon the individual case. Any comments on the amount of time you require to complete this form and/or suggestions for reducing this burden, should be sent to the Chief Information Officer, U.S. Patent and Trademark Office, U.S. Department of Commerce, P.O. Box 1450, Alexandria, VA 22313-1450. DO NOT SEND FEES OR COMPLETED FORMS TO THIS ADDRESS. **BRING TO: File Information Unit, Suite 3A20, 2800 South Randolph Street, Arlington, Virginia.**

If you need assistance in completing the form, call 1-800-PTO-9199 and select option 2.

PTO/SB/68 (02-10)
Approved for use through 07/31/2012. OMB 0651-0031
U.S. Patent and Trademark Office; U.S. DEPARTMENT OF COMMERCE
Under the Paperwork Reduction Act of 1995, no persons are required to respond to a collection of information unless it displays a valid OMB control number.

REQUEST FOR ACCESS TO AN ABANDONED APPLICATION UNDER 37 CFR 1.14

Bring completed form to:
File Information Unit, Suite 3A20
2800 South Randolph Street
Arlington, VA 22206

Telephone: (703) 756-1800

RECEIVED
OCT 15 2014
BY:

In re Application of
Monroe

Application Number	Filed
09/086,073	Jan, 12, 98

Paper No. 20

I hereby request access under 37 CFR 1.14(a)(1)(iv) to the application file record of the above-identified ABANDONED application, which is not within the file jacket of a pending Continued Prosecution Application (CPA) (37 CFR 1.53(d)) and which is identified in, or to which a benefit is claimed, in the following document (as shown in the attachment):

United States Patent Application Publication No. 2002/0109863, page, _____ line _____,

United States Patent Number _____, column _____, line, _____.

WIPO Pub. No. _____, page _____, line _____.

Related Information About Access to Applications Maintained in the Image File Wrapper System (IFW) and Access to Pending Applications in General

A member of the public, acting without a power to inspect, cannot order applications maintained in the IFW system through the FIU. If the member of the public is entitled to a copy of the application file, then the file is made available through the Public Patent Application Information Retrieval system (Public PAIR) on the USPTO internet web site (www.uspto.gov). Terminals that allow access to Public PAIR are available in the Public Search Room. The member of the public may also be entitled to obtain a copy of all or part of the application file upon payment of the appropriate fee. Such copies must be purchased through the **Office of Public Records** upon payment of the appropriate fee (37 CFR 1.19(b)).

For published applications that are still pending, a member of the public may obtain a copy of: the file contents; the pending application as originally filed; or any document in the file of the pending application.

For unpublished applications that are still pending:

(1) If the benefit of the pending application is claimed under 35 U.S.C. 119(e), 120, 121, or 365 in another application that has: (a) issued as a U.S. patent, or (b) published as a statutory invention registration, a U.S. patent application publication, or an international patent application publication in accordance with PCT Article 21(2), a member of the public may obtain a copy of: the file contents; the pending application as originally filed; or any document in the file of the pending application.

(2) If the application is incorporated by reference or otherwise identified in a U.S. patent, a statutory invention registration, a U.S. patent application publication, or an international patent application publication in accordance with PCT Article 21(2), a member of the public may obtain a copy of the pending application as originally filed.

Thomas 1480
Signature

10-15-14
Date

Thomas 1480
Typed of printed name

Registration Number, if applicable

571 273-3819
Telephone Number

FOR PTO USE ONLY

Approved by: _____ (Initials)

Unit: _____

RECEIVED
OCT 15 2014
BY:

This collection of information is required by 37 CFR 1.11 and 1.14. The information is required to obtain or retain a benefit by the public which is to file (and by the USPTO to process) an application. Confidentiality is governed by 35 U.S.C. 122 and 37 CFR 1.11 and 1.14. This collection is estimated to take 12 minutes to complete, including gathering, preparing, and submitting the completed application form to the USPTO. Time will vary depending upon the individual case. Any comments on the amount of time you require to complete this form and/or suggestions for reducing this burden, should be sent to the Chief Information Officer, U.S. Patent and Trademark Office, U.S. Department of Commerce, P.O. Box 1450, Alexandria, VA 22313-1450. DO NOT SEND FEES OR COMPLETED FORMS TO THIS ADDRESS. BRING TO: **File Information Unit, Suite 3A20, 2800 South Randolph Street, Arlington, Virginia.**

If you need assistance in completing the form, call 1-800-PTO-9199 and select option 2.

US 20020109863A1

(19) **United States**

(12) **Patent Application Publication** (10) **Pub. No.: US 2002/0109863 A1**

Monroe (43) **Pub. Date: Aug. 15, 2002**

(54) **APPARATUS FOR CAPTURING, CONVERTING AND TRANSMITTING A VISUAL IMAGE SIGNAL VIA A DIGITAL TRANSMISSION SYSTEM**

(76) Inventor: **David A. Monroe**, San Antonio, TX (US)

Correspondence Address:
Stephen F. Schlather
Bracewell & Patterson, L.L.P.
711 Louisiana, Suite 2900
Houston, TX 77002 (US)

(21) Appl. No.: **09/790,381**

(22) Filed: **Apr. 11, 2002**

Related U.S. Application Data

(62) Division of application No. 09/006,073, filed on Jan. 12, 1998, now abandoned.

Publication Classification

(51) **Int. Cl.**[7] **H04N 1/00**

(52) **U.S. Cl.** **358/400**

20

(57) **ABSTRACT**

An image capture, conversion, compression, storage and transmission system provides a data signal representing the image in a format and protocol capable of being transmitted over any of a plurality of readily available transmission systems and received by readily available, standard equipment receiving stations. In its most comprehensive form, the system is capable of sending and receiving audio, documentary and visual image data to and from standard remote stations readily available throughout the world.

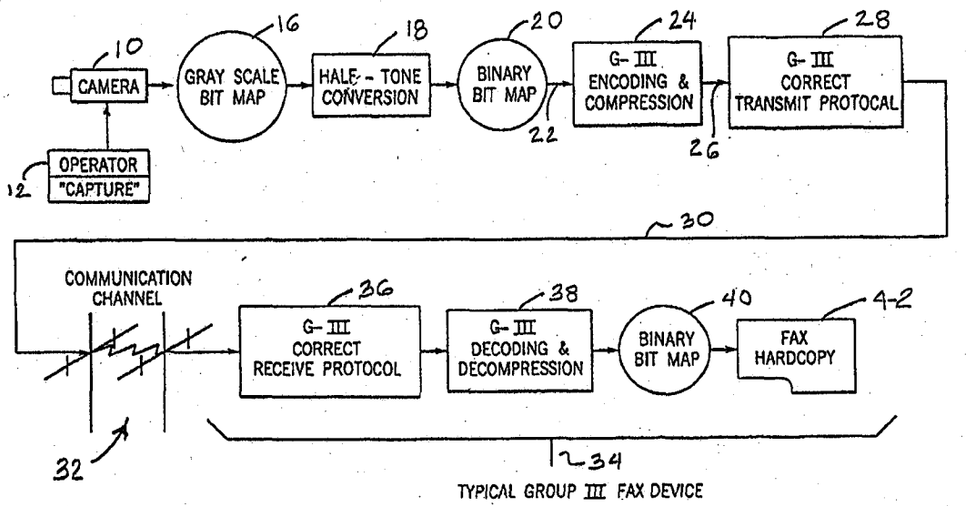

	Type	Hits	Search Text	DBs	Time Stamp	Comments	ErrorDefinitio	Errors
666	BRS	0	analog same camera same cellular same (fax or facsimile)	USPAT	2000/08/14 14:49			0
667	BRS	118	((FAX OR FACSIMILE) AND CELLULAR AND CAMERA AND ANALOG)	USPAT	2000/08/14 16:03			0
668	BRS	10	"5235432".UREF.	USPAT	2000/08/14 16:07			0
669	BRS	6	"5546194".UREF.	USPAT	2000/08/14 16:11			0
670	BRS	395	(DITHER$4 NEAR3 (HALFTONE OR (HALF ADJ TONE)))	USPAT	2000/08/14 16:14			0
671	BRS	1	(("5235432".PN.) AND CELLULAR)	USPAT	2000/08/14 16:15			0
672	BRS	1	(("5235432".PN.) AND ColoR)	USPAT	2000/08/14 16:28			0
673	BRS	0	(("5546194".PN.) AND CellulaR)	USPAT	2000/08/14 16:29			0

PALM INTRANET

Day : Monday
Date: 3/3/2003
Time: 16:00:59

Application Number Information

[redacted] **Assignments**
[redacted]
Effective Date: **01/03/2003**
Application Received: **01/06/2003**
Patent Number:
Issue Date: **00/00/0000**
Date of Abandonment: **00/00/0000**
Attorney Docket Number: **P-121817.02.043(DIV)**
Status: **19 /APPLICATION UNDERGOING PREEXAM PROCESSING**
Confirmation Number: **8448**

Examiner Number: **00000 /**
Group Art Unit: **2622**
Class/Subclass: **358/ .**
Lost Case: **NO**
Interference Number:
Unmatched Petition: **NO**
L&R Code: Secrecy Code:**1**
Third Level Review: **NO**
Secrecy Order: **NO**
Status Date: **01/08/2003**

Title of Invention: **APPARATUS FOR CAPTURING, CONVERTING AND TRANSMITTING A VISUAL IMAGE SIGNAL VIA A DIGITAL TRANSMISSION SYSTEM**

Bar Code	Location	Location Date	Chrg to Loc	Charge to Name	Emp. ID	Infra Loc
10336470	03C0 OIPE - MISSING PARTS-CENTRAL FILES, CP6 LOBBY	02/10/2003		No Charge to Name	BGEBREIGZIABIHER	

Appln Info | Contents | Petition Info | Atty/Agent Info | Continuity Data | Foreign Data | Inventors |

Search Another: Application# [ ] Search **or Patent#** [ ] Search

PCT / [ ] / [ ] Search **or PG PUBS #** [ ] Search

Attorney Docket # [ ] Search

Bar Code # [ ] Search

To go back use Back button on your browser toolbar.

Back to PALM | ASSIGNMENT | OASIS | Home page

Kyocera Ex. 1012
p. 189

PALM INTRANET

Day : Thursday
Date: 3/6/2003
Time: 09:15:05

Continuity Information for 09/006073

Parent Data
No Parent Data

Child Data
09790381 **is a division of** 09006073
[redacted]
PCT/US99/00664 **is a continuation of** 09006073

Search Another: Application# [ ] Search **or Patent#** [ ] Search

PCT / [ ] / [ ] Search **or PG PUBS #** [ ] Search

Attorney Docket # [ ] Search

To go back use Back button on your browser toolbar.

Back to PALM | ASSIGNMENT | OASIS | Home page

PATENT APPLICATION FEE DETERMINATION RECORD

Effective October 1, 1997

Application or Docket Number: 09/006073

CLAIMS AS FILED - PART I

FOR	(Column 1) NUMBER FILED	(Column 2) NUMBER EXTRA
BASIC FEE		
TOTAL CLAIMS 266	minus 20 =	* 246
INDEPENDENT CLAIMS 11	minus 3 =	* 8
MULTIPLE DEPENDENT CLAIM PRESENT		

SMALL ENTITY TYPE ☐	RATE	FEE	OR	OTHER THAN SMALL ENTITY	RATE	FEE
		395.00	OR			790.00
	x$11=		OR		x$22=	5412
	x41=		OR		x82=	656
	+135=		OR		+270=	—
	TOTAL		OR		TOTAL	6858

* If the difference in column 1 is less than zero, enter "0" in column 2

58959.012

CLAIMS AS AMENDED - PART II

AMENDMENT A

	(Column 1) CLAIMS REMAINING AFTER AMENDMENT		(Column 2) HIGHEST NUMBER PREVIOUSLY PAID FOR	(Column 3) PRESENT EXTRA
Total	* 260	Minus	** 266	= —
Independent	* 11	Minus	*** 11	= ✓
FIRST PRESENTATION OF MULTIPLE DEPENDENT CLAIM				

SMALL ENTITY	RATE	ADDITIONAL FEE	OR	OTHER THAN SMALL ENTITY	RATE	ADDITIONAL FEE
	x$11=		OR		x$22=	—
	x41=		OR		x82=	—
	+135=		OR		+270=	—
	TOTAL ADDIT. FEE		OR		TOTAL ADDIT. FEE	—

AMENDMENT B

	(Column 1) CLAIMS REMAINING AFTER AMENDMENT		(Column 2) HIGHEST NUMBER PREVIOUSLY PAID FOR	(Column 3) PRESENT EXTRA
Total	*	Minus	**	=
Independent	*	Minus	***	=
FIRST PRESENTATION OF MULTIPLE DEPENDENT CLAIM				

SMALL ENTITY	RATE	ADDITIONAL FEE	OR	OTHER THAN SMALL ENTITY	RATE	ADDITIONAL FEE
	x$11=		OR		x$22=	
	x41=		OR		x82=	
	+135=		OR		+270=	
	TOTAL ADDIT. FEE		OR		TOTAL ADDIT. FEE	

AMENDMENT C

	(Column 1) CLAIMS REMAINING AFTER AMENDMENT		(Column 2) HIGHEST NUMBER PREVIOUSLY PAID FOR	(Column 3) PRESENT EXTRA
Total	*	Minus	**	=
Independent	*	Minus	***	=
FIRST PRESENTATION OF MULTIPLE DEPENDENT CLAIM				

SMALL ENTITY	RATE	ADDITIONAL FEE	OR	OTHER THAN SMALL ENTITY	RATE	ADDITIONAL FEE
	x$11=		OR		x$22=	
	x41=		OR		x82=	
	+135=		OR		+270=	
	TOTAL ADDIT. FEE		OR		TOTAL ADDIT. FEE	

* If the entry in column 1 is less than the entry in column 2, write "0" in column 3.
** If the "Highest Number Previously Paid For" IN THIS SPACE is less than 20, enter "20."
*** If the "Highest Number Previously Paid For" IN THIS SPACE is less than 3, enter "3."
The "Highest Number Previously Paid For" (Total or Independent) is the highest number found in the appropriate box in column 1.

FORM PTO-875 (Rev. 8/97) *U.S. Government Printing Office: 1997 - 430-571/69194 Patent and Trademark Office, U.S. DEPARTMENT OF COMMERCE

Staple issue Slip Here

POSITION		ID NO.	DATE
CLASSIFIER		55	09/18/97
EXAMINER		69652	11/18/97
TYPIST			
VERIFIER			
CORPS CORR.			
SPEC. HAND			
FILE MAINT.			
DRAFTING			

RESTRICTION

INDEX OF CLAIMS

Claim Final	Claim Original	Date 11/20/99
	1	N
	2	N
	3	N
	4	N
	5	N
	6	N
	7	N
	8	N
	9	N
	10	N
	11	N
	12	N
	13	N
	14	N
	15	N
	16	N
	17	N
	18	N
	19	N
	20	N
	21	N
	22	N
	23	N
	24	N
	25	N
	26	N
	27	N
	28	N
	29	N
	30	N
	31	✓
	32	N
	33	N
	34	N
	35	N
	36	N
	37	N
	38	N
	39	N
	40	✓
	41	N
	42	N
	43	N
	44	✓
	45	N
	46	N
	47	N
	48	N
	49	N
	50	N
	51	N
	52	N
	53	N
	54	N
	55	N
	56	N
	57	N
	58	N
	59	N
	60	N

SYMBOLS

✓	Rejected
=	Allowed
- (Through numberal)	Canceled
+	Restricted
N	Non-elected
I	Interference
A	Appeal
O	Objected

Claim Final	Claim Original	Date 11/20/99
	201	N
	202	N
	203	N
	204	N
	205	N
	206	N
	207	N
	208	N
	209	N
	210	N
	211	N
	212	N
	213	N
	214	N
	215	N
	216	N
	217	N
	218	N
	219	N
	220	N
	221	N
	222	N
	223	N
	224	N
	225	N
	226	N
	227	N
	228	N
	229	N
	230	N
	231	N
	232	N
	233	N
	234	N
	235	N
	236	N
	237	N
	238	N
	239	N
	240	N
	241	N
	242	N
	243	N
	244	N
	245	N
	246	N
	247	N
	248	N
	249	N
	250	N

Staple Issue Slip Here

POSITION		ID NO.	DATE
CLASSIFIER		55	09/18/97
EXAMINER		69652	11/18/97
TYPIST			
VERIFIER			
CORPS CORR.			
SPEC. HAND			
FILE MAINT.			
DRAFTING			

RESTRICTION

INDEX OF CLAIMS

Claim Final	Claim Original	Date 11/24/98							
	251	N							
	252	N							
	253	N							
	254	N							
	255	N							
	256	N							
	257	N							
	258	N							
	259	N							
	260	N							
	261	N							
	262	N							
	263	N							
	264	N							
	265	N							
	266	N							
	17								
	18								
	19								
	20								
	21								
	22								
	23								
	24								
	25								
	26								
	27								
	28								
	29								
	30								
	31								
	32								
	33								
	34								
	35								
	36								
	37								
	38								
	39								
	40								
	41								
	42								
	43								
	44								
	45								
	46								
	47								
	48								
	49								
	50								

SYMBOLS

✓	Rejected
=	Allowed
-	(Through numberal) Canceled
+	Restricted
N	Non-elected
I	Interference
A	Appeal
O	Objected

Claim Final	Claim Original	Date							
	51								
	52								
	53								
	54								
	55								
	56								
	57								
	58								
	59								
	60								
	61								
	62								
	63								
	64								
	65								
	66								
	67								
	68								
	69								
	70								
	71								
	72								
	73								
	74								
	75								
	76								
	77								
	78								
	79								
	80								
	81								
	82								
	83								
	84								
	85								
	86								
	87								
	88								
	89								
	90								
	91								
	92								
	93								
	94								
	95								
	96								
	97								
	98								
	99								
	100								

ISSUE SLIP STAPLE AREA (for additional cross references)

POSITION	INITIALS	ID NO.	DATE
FEE DETERMINATION			
O.I.P.E. CLASSIFIER		58	3-4-98
FORMALITY REVIEW	DM	72223 09599	4/6/98 07-16-98

INDEX OF CLAIMS

✔ ..... Rejected
= ..... Allowed
— (Through numeral) Canceled
÷ ..... Restricted
N ..... Non-elected
I ..... Interference
A ..... Appeal
O ..... Objected

Claim Final	Claim Original	Date 11/29/99	Date 8/15/00
	1	✓	✓
	2	✓	✓
	3	✓	✓
	4	✓	✓
	~~5~~	✓	
	~~6~~	✓	
	~~7~~	✓	
	~~8~~	✓	
	9	✓	✓
	10	✓	✓
	11	✓	✓
	12	✓	✓
	13	✓	✓
	14	✓	✓
	15	✓	✓
	16	✓	✓
	17	✓	✓
	18	✓	✓
	19	✓	✓
	20	✓	✓
	21	✓	✓
	22	✓	✓
	23	✓	✓
	24	✓	✓
	25	✓	✓
	26	✓	✓
	27	✓	✓
	28	✓	✓
	29	N	
	30	N	
	31	N	
	32	N	
	33	N	
	34	N	
	35	N	
	36	N	
	37	N	
	38	N	
	39	N	
	40	N	
	41	N	
	42	N	
	43	N	
	44	N	
	45	N	
	46	N	
	47	N	
	48	N	
	49	N	
	50	N	

Claim Final	Claim Original	Date 11/29/99
	51	N
	52	N
	53	N
	54	N
	55	N
	56	N
	57	N
	58	N
	59	N
	60	N
	61	N
	62	N
	63	N
	64	N
	65	N
	66	N
	67	N
	68	N
	69	N
	70	N
	71	N
	72	N
	73	N
	74	N
	75	N
	76	N
	77	N
	78	N
	79	N
	70	N
	81	N
	82	N
	83	N
	84	N
	85	N
	86	N
	87	N
	88	N
	89	N
	90	N
	91	N
	92	N
	93	N
	94	N
	95	N
	96	N
	97	N
	98	N
	99	N
	100	N

Claim Final	Claim Original	Date 11/29/99
	110	N
	112	N
	113	N
	114	N
	115	N
	116	N
	117	N
	118	N
	119	N
	110	N
	111	N
	112	N
	113	N
	114	N
	115	N
	116	N
	117	N
	118	N
	119	N
	120	N
	121	N
	122	N
	123	N
	124	N
	125	N
	126	N
	127	N
	128	N
	129	N
	130	N
	131	N
	132	N
	133	N
	134	N
	135	N
	136	N
	137	N
	138	N
	139	N
	140	N
	141	N
	142	N
	143	N
	144	N
	145	N
	146	N
	147	N
	148	N
	149	N
	150	N

If more than 150 claims or 10 actions staple additional sheet here

(LEFT INSIDE)

[redacted]

SEARCHED

Class	Sub.	Date	Exmr.
358	400	8/10/99	JP
	407		
	442		
	445		
	471		
348	14		
	17		
	18		
	19		
	143		
	155		
	207		
	211		
	441		
379	100.01		
	100.02		
	100.05		
	100.09		
	100.13		
	100.15		
	100.16		
	100.17		
	102.01		
	106.01		

INTERFERENCE SEARCHED

Class	Sub.	Date	Exmr.

SEARCH NOTES (INCLUDING SEARCH STRATEGY)

	Date	Exmr.
CONSULTED W/ JEROME GRANT	11/16/99	JP
SEARCHED RELATED PCT CASE	8/10/99	JP
SEARCHED EAST (NOT ATTACHED)	11/15/99	JP
SEARCHED EAST (ATTACHED)	8/14/00	JP

(RIGHT OUTSIDE)