UNITED STATES PATENT AND TRADEMARK OFFICE

UNITED STATES DEPARTMENT OF COMMERCE
United States Patent and Trademark Office
Address: COMMISSIONER FOR PATENTS
P.O. Box 1450
Alexandria, Virginia 22313-1450
www.uspto.gov

APPLICATION NUMBER	FILING OR 371(C) DATE	FIRST NAMED APPLICANT	ATTY. DOCKET NO./TITLE
10/600,975	06/20/2003	Michael E. Shanahan	PREMM.001A2C1

CONFIRMATION NO. 7158

POA ACCEPTANCE LETTER

20995
KNOBBE MARTENS OLSON & BEAR LLP
2040 MAIN STREET
FOURTEENTH FLOOR
IRVINE, CA 92614

OC000000047723259

Date Mailed: 05/20/2011

NOTICE OF ACCEPTANCE OF POWER OF ATTORNEY

This is in response to the Power of Attorney filed 05/11/2011.

The Power of Attorney in this application is accepted. Correspondence in this application will be mailed to the above address as provided by 37 CFR 1.33.

/mteklemichael/

Office of Data Management, Application Assistance Unit (571) 272-4000, or (571) 272-4200, or 1-888-786-0101

AT&T - Exhibit 1014

Please Direct All Correspondence to Customer Number 20,995

CHANGE OF CORRESPONDENCE ADDRESS

Applicant	:	Shanahan, Michael E.
App. No	:	10/600,975
Filed	:	June 20, 2003
For	:	METHODS AND APPARATUSES FOR PROGRAMMING USER-DEFINED INFORMATION INTO ELECTRONIC DEVICES
Examiner	:	Beamer, Temica M.
Art Unit	:	2617
Conf. No.	:	7158

Mail Stop Post Issue
Commissioner for Patents
P.O. Box 1450
Alexandria, VA 22313-1450

Dear Sir:

Please change the Correspondence Address for the above-identified patent application to the address associated with Customer Number: 20,995

Respectfully submitted,

KNOBBE MARTENS OLSON & BEAR LLP

Dated: May 11, 2011

Karen J. Lenker
Registration No. 54,618
Agent of Record
Customer No. 20,995
(949) 760-0404

11218739
051111

STATEMENT UNDER 37 CFR § 3.73(b)
ESTABLISHMENT OF ASSIGNEE

Applicant	:	Michael E. Shanahan
App. No.	:	10/600,975
Filed	:	June 20, 2003
For	:	METHODS AND APPARATUSES FOR PROGRAMMING USER-DEFINED INFORMATION INTO ELECTRONIC DEVICES
Examiner	:	Beamer, Temica M.
Group Art Unit	:	2617
Conf. No.	:	7158

Commissioner for Patents
P.O. Box 1450
Alexandria, VA 22313-1450

Dear Sir:

This document is being filed with a copy of a Power of Attorney signed by the Assignee. This Statement sets forth the chain of title of the above-identified application.

Premorphic Mobile LP, a Corporation, is the Assignee of the entire right, title, and interest of the above-referenced application by virtue of:

A chain of title, in reverse order, from the inventor(s) to the current Assignee as shown by the following recorded assignments:

1. Assignment from Premorphic Research, Inc. to Premorphic Mobile LP recorded in the United States Patent and Trademark Office on March 25, 2011, at Reel 026022, and Frame 0633.
2. Assignment from Twenty Year Innovations, Inc. to Premorphic Research, Inc. recorded in the United States Patent and Trademark Office on March 18, 2011, at Reel 025982, and Frame 0819.
3. Assignment from Michael E. Shanahan to Twenty Year Innovations, Inc. recorded in the United States Patent and Trademark Office on March 1, 2004, at Reel 015027, and Frame 0049.

The undersigned is an agent of Customer Number 20,995 and is authorized to act on behalf of the Assignee. Please recognize or change the correspondence address for the above-identified application to **Customer No. 20,995.**

Respectfully submitted,

KNOBBE, MARTENS, OLSON & BEAR, LLP

Dated: May 11, 2011

By: Karen J. Lenker

Karen J. Lenker
Registration No. 54,618
Agent of Record
Customer No. 20,995
(949) 760-0404

11220732

051111

REVOCATION & GENERAL POWER OF ATTORNEY
and
CHANGE IN CORRESPONDENCE ADDRESS

Commissioner for Patents
P.O. Box 1450
Alexandria, VA 22313-1450

Dear Sir:

The undersigned is an empowered representative of the Assignee and hereby appoints the registrants of Knobbe, Martens, Olson & Bear, LLP, **Customer No. 20,995**, as attorneys and agents to represent the Assignee before the United States Patent and Trademark Office (USPTO) in connection with any and all patent applications assigned to the Assignee according to the USPTO assignment records or assignment documents supplied with an accompanying Statement Under 37 CFR § 3.73(b). This appointment is to be to the exclusion of the inventor(s) and his attorney(s) in accordance with the provisions of 37 CFR § 3.71.

Submission of this paper in connection with any matter of the below named assignee, together with a statement under 37 CFR 3.73(b), shall serve to revoke any previous powers of attorney in that matter.

Attached is a Statement Under 37 CFR § 3.73(b), signed by a registrant of Knobbe, Martens, Olson & Bear, LLP, setting forth a full chain of title for the subject application owned by the Assignee named below.

Please recognize or change the correspondence address for the application identified in the attached Statement to **Customer No. 20,995.**

By: _____ Date: 5/11/11

Name: Marcus S. Muller Title: CEO

Assignee Premorphic Mobile LP

Address: 4828 South Broadway Street
Suite 360
Tyler, Texas 75703

11214171/051011

Electronic Acknowledgement Receipt

EFS ID:	10071608
Application Number:	10600975
International Application Number:	
Confirmation Number:	7158
Title of Invention:	METHODS AND APPARATUSES FOR PROGRAMMING USER-DEFINED INFORMATION INTO ELECTRONIC DEVICES
First Named Inventor/Applicant Name:	Michael E. Shanahan
Customer Number:	39550
Filer:	Karen J. Lenker/Quyen Lieu
Filer Authorized By:	Karen J. Lenker
Attorney Docket Number:	MES-002 CON
Receipt Date:	11-MAY-2011
Filing Date:	20-JUN-2003
Time Stamp:	19:01:03
Application Type:	Utility under 35 USC 111(a)

Payment information:

Submitted with Payment	no

File Listing:

Document Number	Document Description	File Name	File Size(Bytes)/ Message Digest	Multi Part /.zip	Pages (if appl.)
1	Change of Address	PREMM_001A2C1-ChangeofAddress.pdf	29360 7b49dd4a130e349b3495687066784cff420a138d	no	1

Warnings:	
Information:	

2	Assignee showing of ownership per 37 CFR 3.73(b).	PREMM_001A2C1-373.pdf	52013 ae4eba67b4736e433e59b48fcb4a8b4a3a264622	no	2
Warnings:					
Information:					
3	Power of Attorney	PREMM_000GEN-POA.PDF	350231 a4f66357a4195eda92dc67164d9ffd7bdcff2e56	no	1
Warnings:					
Information:					
			Total Files Size (in bytes):	431604	

This Acknowledgement Receipt evidences receipt on the noted date by the USPTO of the indicated documents, characterized by the applicant, and including page counts, where applicable. It serves as evidence of receipt similar to a Post Card, as described in MPEP 503.

New Applications Under 35 U.S.C. 111

If a new application is being filed and the application includes the necessary components for a filing date (see 37 CFR 1.53(b)-(d) and MPEP 506), a Filing Receipt (37 CFR 1.54) will be issued in due course and the date shown on this Acknowledgement Receipt will establish the filing date of the application.

National Stage of an International Application under 35 U.S.C. 371

If a timely submission to enter the national stage of an international application is compliant with the conditions of 35 U.S.C. 371 and other applicable requirements a Form PCT/DO/EO/903 indicating acceptance of the application as a national stage submission under 35 U.S.C. 371 will be issued in addition to the Filing Receipt, in due course.

New International Application Filed with the USPTO as a Receiving Office

If a new international application is being filed and the international application includes the necessary components for an international filing date (see PCT Article 11 and MPEP 1810), a Notification of the International Application Number and of the International Filing Date (Form PCT/RO/105) will be issued in due course, subject to prescriptions concerning national security, and the date shown on this Acknowledgement Receipt will establish the international filing date of the application.

PTO/SB/123 (01-06)
Approved for use through 12/31/2008. OMB 0651-0035
U.S. Patent and Trademark Office; U.S. DEPARTMENT OF COMMERCE
Under the Paperwork Reduction Act of 1995, no persons are required to respond to a collection of information unless it displays a valid OMB control number.

CHANGE OF CORRESPONDENCE ADDRESS
Patent

Address to:
Mail Stop Post Issue
Commissioner for Patents
P.O. Box 1450
Alexandria, VA 22313-1450

Patent Number	7,149,509
Issue Date	December 12, 2006
Application Number	10/600,975
Filing Date	June 20, 2003
First Named Inventor	Michael E. Shanahan
Attorney Docket Number	116236-00011

Please change the Correspondence Address for the above-identified patent to:

☑ The address associated with Customer Number: 27614

OR

☐ **Firm *or* Individual Name** Scott H. Kaliko, Esq., c/o McCarter & English, LLP

Address Four Gateway Center
100 Mulberry Street

City Newark **State** NJ **ZIP** 07102

Country U.S.

Telephone 973-639-7980 **Email**

This form cannot be used to change the data associated with a Customer Number. To change the data associated with an existing Customer Number use "Request for Customer Number Data Change" (PTO/SB/124).

This form will not affect any "fee address" provided for the above-identified patent. To change a "fee address" use the "Fee Address Indication Form" (PTO/SB/47).

I am the:

☐ Patentee.

☐ Assignee of record of the entire interest. See 37 CFR 3.71.
Statement under 37 CFR 3.73(b) is enclosed. (Form PTO/SB/96).

☑ Attorney or agent of record. Registration Number 45,786.

Signature

Typed or Printed Name Scott H. Kaliko

Date 11/11/08 Telephone 973-639-7980

NOTE: Signatures of all the inventors or assignees of record of the entire interest or their representative(s) are required. Submit multiple forms if more than one signature is required, see below*.

☑ *Total of 1 forms are submitted.

This collection of information is required by 37 CFR 1.33. The information is required to obtain or retain a benefit by the public which is to file (and by the USPTO to process) an application. Confidentiality is governed by 35 U.S.C. 122 and 37 CFR 1.11 and 1.14. This collection is estimated to take 3 minutes to complete, including gathering, preparing, and submitting the completed application form to the USPTO. Time will vary depending upon the individual case. Any comments on the amount of time you require to complete this form and/or suggestions for reducing this burden, should be sent to the Chief Information Officer, U.S. Patent and Trademark Office, U.S. Department of Commerce, P.O. Box 1450, Alexandria, VA 22313-1450. DO NOT SEND FEES OR COMPLETED FORMS TO THIS ADDRESS. **SEND TO: Mail Stop Post Issue, Commissioner for Patents, P.O. Box 1450, Alexandria, VA 22313-1450.**

If you need assistance in completing the form, call 1-800-PTO-9199 and select option 2.

Electronic Acknowledgement Receipt

EFS ID:	4273306
Application Number:	10600975
International Application Number:	
Confirmation Number:	7158
Title of Invention:	METHODS AND APPARATUSES FOR PROGRAMMING USER-DEFINED INFORMATION INTO ELECTRONIC DEVICES
First Named Inventor/Applicant Name:	Michael E. Shanahan
Customer Number:	39550
Filer:	Scott Howard Kaliko
Filer Authorized By:	
Attorney Docket Number:	116236-00011
Receipt Date:	12-NOV-2008
Filing Date:	20-JUN-2003
Time Stamp:	11:37:13
Application Type:	Utility under 35 USC 111(a)

Payment information:

Submitted with Payment	no

File Listing:

Document Number	Document Description	File Name	File Size(Bytes)/ Message Digest	Multi Part /.zip	Pages (if appl.)
1	Change of Address	509ChangeofCorresAddress.pdf	39381 b5f051be0006c78353574117f95b59887086faf2	no	1

Warnings:	
Information:	

Total Files Size (in bytes):	39381

This Acknowledgement Receipt evidences receipt on the noted date by the USPTO of the indicated documents, characterized by the applicant, and including page counts, where applicable. It serves as evidence of receipt similar to a Post Card, as described in MPEP 503.

New Applications Under 35 U.S.C. 111

If a new application is being filed and the application includes the necessary components for a filing date (see 37 CFR 1.53(b)-(d) and MPEP 506), a Filing Receipt (37 CFR 1.54) will be issued in due course and the date shown on this Acknowledgement Receipt will establish the filing date of the application.

National Stage of an International Application under 35 U.S.C. 371

If a timely submission to enter the national stage of an international application is compliant with the conditions of 35 U.S.C. 371 and other applicable requirements a Form PCT/DO/EO/903 indicating acceptance of the application as a national stage submission under 35 U.S.C. 371 will be issued in addition to the Filing Receipt, in due course.

New International Application Filed with the USPTO as a Receiving Office

If a new international application is being filed and the international application includes the necessary components for an international filing date (see PCT Article 11 and MPEP 1810), a Notification of the International Application Number and of the International Filing Date (Form PCT/RO/105) will be issued in due course, subject to prescriptions concerning national security, and the date shown on this Acknowledgement Receipt will establish the international filing date of the application.

UNITED STATES PATENT AND TRADEMARK OFFICE

UNITED STATES DEPARTMENT OF COMMERCE
United States Patent and Trademark Office
Address: COMMISSIONER FOR PATENTS
P.O. Box 1450
Alexandria, Virginia 22313-1450
www.uspto.gov

NOTICE OF ALLOWANCE AND FEE(S) DUE

45594 7590 08/03/2007

NVIDIA C/O MURABITO, HAO & BARNES LLP
TWO NORTH MARKET STREET
THIRD FLOOR
SAN JOSE, CA 95113

EXAMINER	
ELAMIN, ABDELMONIEM I	
ART UNIT	PAPER NUMBER
2116	

DATE MAILED: 08/03/2007

APPLICATION NO.	FILING DATE	FIRST NAMED INVENTOR	ATTORNEY DOCKET NO.	CONFIRMATION NO.
11/600,975	11/17/2006	Bruce Holmer	NVID-P002877	5311

TITLE OF INVENTION: HIGH QUALITY AND HIGH PERFORMANCE THREE-DIMENSIONAL GRAPHICS ARCHITECTURE FOR PORTABLE HANDHELD DEVICES

APPLN. TYPE	SMALL ENTITY	ISSUE FEE DUE	PUBLICATION FEE DUE	PREV. PAID ISSUE FEE	TOTAL FEE(S) DUE	DATE DUE
nonprovisional	NO	$1400	$0	$0	$1400	11/05/2007

THE APPLICATION IDENTIFIED ABOVE HAS BEEN EXAMINED AND IS ALLOWED FOR ISSUANCE AS A PATENT. PROSECUTION ON THE MERITS IS CLOSED. THIS NOTICE OF ALLOWANCE IS NOT A GRANT OF PATENT RIGHTS. THIS APPLICATION IS SUBJECT TO WITHDRAWAL FROM ISSUE AT THE INITIATIVE OF THE OFFICE OR UPON PETITION BY THE APPLICANT. SEE 37 CFR 1.313 AND MPEP 1308.

THE ISSUE FEE AND PUBLICATION FEE (IF REQUIRED) MUST BE PAID WITHIN THREE MONTHS FROM THE MAILING DATE OF THIS NOTICE OR THIS APPLICATION SHALL BE REGARDED AS ABANDONED. THIS STATUTORY PERIOD CANNOT BE EXTENDED. SEE 35 U.S.C. 151. THE ISSUE FEE DUE INDICATED ABOVE DOES NOT REFLECT A CREDIT FOR ANY PREVIOUSLY PAID ISSUE FEE IN THIS APPLICATION. IF AN ISSUE FEE HAS PREVIOUSLY BEEN PAID IN THIS APPLICATION (AS SHOWN ABOVE), THE RETURN OF PART B OF THIS FORM WILL BE CONSIDERED A REQUEST TO REAPPLY THE PREVIOUSLY PAID ISSUE FEE TOWARD THE ISSUE FEE NOW DUE.

HOW TO REPLY TO THIS NOTICE:

I. Review the SMALL ENTITY status shown above.

If the SMALL ENTITY is shown as YES, verify your current SMALL ENTITY status:

A. If the status is the same, pay the TOTAL FEE(S) DUE shown above.

B. If the status above is to be removed, check box 5b on Part B - Fee(s) Transmittal and pay the PUBLICATION FEE (if required) and twice the amount of the ISSUE FEE shown above, or

If the SMALL ENTITY is shown as NO:

A. Pay TOTAL FEE(S) DUE shown above, or

B. If applicant claimed SMALL ENTITY status before, or is now claiming SMALL ENTITY status, check box 5a on Part B - Fee(s) Transmittal and pay the PUBLICATION FEE (if required) and 1/2 the ISSUE FEE shown above.

II. PART B - FEE(S) TRANSMITTAL, or its equivalent, must be completed and returned to the United States Patent and Trademark Office (USPTO) with your ISSUE FEE and PUBLICATION FEE (if required). If you are charging the fee(s) to your deposit account, section "4b" of Part B - Fee(s) Transmittal should be completed and an extra copy of the form should be submitted. If an equivalent of Part B is filed, a request to reapply a previously paid issue fee must be clearly made, and delays in processing may occur due to the difficulty in recognizing the paper as an equivalent of Part B.

III. All communications regarding this application must give the application number. Please direct all communications prior to issuance to Mail Stop ISSUE FEE unless advised to the contrary.

IMPORTANT REMINDER: Utility patents issuing on applications filed on or after Dec. 12, 1980 may require payment of maintenance fees. It is patentee's responsibility to ensure timely payment of maintenance fees when due.

PART B - FEE(S) TRANSMITTAL

Complete and send this form, together with applicable fee(s), to: Mail **Mail Stop ISSUE FEE**
Commissioner for Patents
P.O. Box 1450
Alexandria, Virginia 22313-1450
or Fax (571)-273-2885

INSTRUCTIONS: This form should be used for transmitting the ISSUE FEE and PUBLICATION FEE (if required). Blocks 1 through 5 should be completed where appropriate. All further correspondence including the Patent, advance orders and notification of maintenance fees will be mailed to the current correspondence address as indicated unless corrected below or directed otherwise in Block 1, by (a) specifying a new correspondence address; and/or (b) indicating a separate "FEE ADDRESS" for maintenance fee notifications.

CURRENT CORRESPONDENCE ADDRESS (Note: Use Block 1 for any change of address)

45594 7590 08/03/2007

NVIDIA C/O MURABITO, HAO & BARNES LLP
TWO NORTH MARKET STREET
THIRD FLOOR
SAN JOSE, CA 95113

Note: A certificate of mailing can only be used for domestic mailings of the Fee(s) Transmittal. This certificate cannot be used for any other accompanying papers. Each additional paper, such as an assignment or formal drawing, must have its own certificate of mailing or transmission.

Certificate of Mailing or Transmission
I hereby certify that this Fee(s) Transmittal is being deposited with the United States Postal Service with sufficient postage for first class mail in an envelope addressed to the Mail Stop ISSUE FEE address above, or being facsimile transmitted to the USPTO (571) 273-2885, on the date indicated below.

(Depositor's name)
(Signature)
(Date)

APPLICATION NO.	FILING DATE	FIRST NAMED INVENTOR	ATTORNEY DOCKET NO.	CONFIRMATION NO.
11/600,975	11/17/2006	Bruce Holmer	NVID-P002877	5311

TITLE OF INVENTION: HIGH QUALITY AND HIGH PERFORMANCE THREE-DIMENSIONAL GRAPHICS ARCHITECTURE FOR PORTABLE HANDHELD DEVICES

APPLN. TYPE	SMALL ENTITY	ISSUE FEE DUE	PUBLICATION FEE DUE	PREV. PAID ISSUE FEE	TOTAL FEE(S) DUE	DATE DUE
nonprovisional	NO	$1400	$0	$0	$1400	11/05/2007

EXAMINER	ART UNIT	CLASS-SUBCLASS
ELAMIN, ABDELMONIEM I	2116	713-320000

1. Change of correspondence address or indication of "Fee Address" (37 CFR 1.363).
☐ Change of correspondence address (or Change of Correspondence Address form PTO/SB/122) attached.
☐ "Fee Address" indication (or "Fee Address" Indication form PTO/SB/47; Rev 03-02 or more recent) attached. **Use of a Customer Number is required.**

2. For printing on the patent front page, list
(1) the names of up to 3 registered patent attorneys or agents OR, alternatively,
(2) the name of a single firm (having as a member a registered attorney or agent) and the names of up to 2 registered patent attorneys or agents. If no name is listed, no name will be printed.
1 _____
2 _____
3 _____

3. ASSIGNEE NAME AND RESIDENCE DATA TO BE PRINTED ON THE PATENT (print or type)

PLEASE NOTE: Unless an assignee is identified below, no assignee data will appear on the patent. If an assignee is identified below, the document has been filed for recordation as set forth in 37 CFR 3.11. Completion of this form is NOT a substitute for filing an assignment.

(A) NAME OF ASSIGNEE (B) RESIDENCE: (CITY and STATE OR COUNTRY)

Please check the appropriate assignee category or categories (will not be printed on the patent) : ☐ Individual ☐ Corporation or other private group entity ☐ Government

4a. The following fee(s) are submitted:
☐ Issue Fee
☐ Publication Fee (No small entity discount permitted)
☐ Advance Order - # of Copies _____

4b. Payment of Fee(s): **(Please first reapply any previously paid issue fee shown above)**
☐ A check is enclosed.
☐ Payment by credit card. Form PTO-2038 is attached.
☐ The Director is hereby authorized to charge the required fee(s), any deficiency, or credit any overpayment, to Deposit Account Number _____ (enclose an extra copy of this form).

5. **Change in Entity Status** (from status indicated above)
☐ a. Applicant claims SMALL ENTITY status. See 37 CFR 1.27. ☐ b. Applicant is no longer claiming SMALL ENTITY status. See 37 CFR 1.27(g)(2).

NOTE: The Issue Fee and Publication Fee (if required) will not be accepted from anyone other than the applicant; a registered attorney or agent; or the assignee or other party in interest as shown by the records of the United States Patent and Trademark Office.

Authorized Signature _____ Date _____

Typed or printed name _____ Registration No. _____

This collection of information is required by 37 CFR 1.311. The information is required to obtain or retain a benefit by the public which is to file (and by the USPTO to process) an application. Confidentiality is governed by 35 U.S.C. 122 and 37 CFR 1.14. This collection is estimated to take 12 minutes to complete, including gathering, preparing, and submitting the completed application form to the USPTO. Time will vary depending upon the individual case. Any comments on the amount of time you require to complete this form and/or suggestions for reducing this burden, should be sent to the Chief Information Officer, U.S. Patent and Trademark Office, U.S. Department of Commerce, P.O. Box 1450, Alexandria, Virginia 22313-1450. DO NOT SEND FEES OR COMPLETED FORMS TO THIS ADDRESS. SEND TO: Commissioner for Patents, P.O. Box 1450, Alexandria, Virginia 22313-1450.

Under the Paperwork Reduction Act of 1995, no persons are required to respond to a collection of information unless it displays a valid OMB control number.

UNITED STATES PATENT AND TRADEMARK OFFICE

UNITED STATES DEPARTMENT OF COMMERCE
United States Patent and Trademark Office
Address: COMMISSIONER FOR PATENTS
P.O. Box 1450
Alexandria, Virginia 22313-1450
www.uspto.gov

APPLICATION NO.	FILING DATE	FIRST NAMED INVENTOR	ATTORNEY DOCKET NO.	CONFIRMATION NO.
11/600,975	11/17/2006	Bruce Holmer	NVID-P002877	5311

45594 7590 08/03/2007

NVIDIA C/O MURABITO, HAO & BARNES LLP
TWO NORTH MARKET STREET
THIRD FLOOR
SAN JOSE, CA 95113

EXAMINER	
ELAMIN, ABDELMONIEM I	
ART UNIT	PAPER NUMBER
2116	

DATE MAILED: 08/03/2007

Determination of Patent Term Adjustment under 35 U.S.C. 154 (b)
(application filed on or after May 29, 2000)

The Patent Term Adjustment to date is 0 day(s). If the issue fee is paid on the date that is three months after the mailing date of this notice and the patent issues on the Tuesday before the date that is 28 weeks (six and a half months) after the mailing date of this notice, the Patent Term Adjustment will be 0 day(s).

If a Continued Prosecution Application (CPA) was filed in the above-identified application, the filing date that determines Patent Term Adjustment is the filing date of the most recent CPA.

Applicant will be able to obtain more detailed information by accessing the Patent Application Information Retrieval (PAIR) WEB site (http://pair.uspto.gov).

Any questions regarding the Patent Term Extension or Adjustment determination should be directed to the Office of Patent Legal Administration at (571)-272-7702. Questions relating to issue and publication fee payments should be directed to the Customer Service Center of the Office of Patent Publication at 1-(888)-786-0101 or (571)-272-4200.

PTOL-85 (Rev. 08/07) Approved for use through 08/31/2007.

Notice of Allowability	Application No. 11/600,975	Applicant(s) HOLMER, BRUCE	
	Examiner Abdelmoniem Elamin	Art Unit 2116	

-- The MAILING DATE of this communication appears on the cover sheet with the correspondence address--

All claims being allowable, PROSECUTION ON THE MERITS IS (OR REMAINS) CLOSED in this application. If not included herewith (or previously mailed), a Notice of Allowance (PTOL-85) or other appropriate communication will be mailed in due course. **THIS NOTICE OF ALLOWABILITY IS NOT A GRANT OF PATENT RIGHTS.** This application is subject to withdrawal from issue at the initiative of the Office or upon petition by the applicant. See 37 CFR 1.313 and MPEP 1308.

1. ☒ This communication is responsive to *Amendment filed on 7/2/2007*.

2. ☒ The allowed claim(s) is/are *1-20*.

3. ☐ Acknowledgment is made of a claim for foreign priority under 35 U.S.C. § 119(a)-(d) or (f).
   a) ☐ All b) ☐ Some* c) ☐ None of the:
      1. ☐ Certified copies of the priority documents have been received.
      2. ☐ Certified copies of the priority documents have been received in Application No. _____ .
      3. ☐ Copies of the certified copies of the priority documents have been received in this national stage application from the International Bureau (PCT Rule 17.2(a)).

   * Certified copies not received: _____.

Applicant has THREE MONTHS FROM THE "MAILING DATE" of this communication to file a reply complying with the requirements noted below. Failure to timely comply will result in ABANDONMENT of this application.
THIS THREE-MONTH PERIOD IS NOT EXTENDABLE.

4. ☐ A SUBSTITUTE OATH OR DECLARATION must be submitted. Note the attached EXAMINER'S AMENDMENT or NOTICE OF INFORMAL PATENT APPLICATION (PTO-152) which gives reason(s) why the oath or declaration is deficient.

5. ☐ CORRECTED DRAWINGS (as "replacement sheets") must be submitted.
   (a) ☐ including changes required by the Notice of Draftsperson's Patent Drawing Review (PTO-948) attached
      1) ☐ hereto or 2) ☐ to Paper No./Mail Date _____.
   (b) ☐ including changes required by the attached Examiner's Amendment / Comment or in the Office action of Paper No./Mail Date _____.

Identifying indicia such as the application number (see 37 CFR 1.84(c)) should be written on the drawings in the front (not the back) of each sheet. Replacement sheet(s) should be labeled as such in the header according to 37 CFR 1.121(d).

6. ☐ DEPOSIT OF and/or INFORMATION about the deposit of BIOLOGICAL MATERIAL must be submitted. Note the attached Examiner's comment regarding REQUIREMENT FOR THE DEPOSIT OF BIOLOGICAL MATERIAL.

Attachment(s)

1. ☒ Notice of References Cited (PTO-892)
2. ☐ Notice of Draftperson's Patent Drawing Review (PTO-948)
3. ☐ Information Disclosure Statements (PTO/SB/08), Paper No./Mail Date _____
4. ☐ Examiner's Comment Regarding Requirement for Deposit of Biological Material
5. ☐ Notice of Informal Patent Application
6. ☐ Interview Summary (PTO-413), Paper No./Mail Date _____ .
7. ☐ Examiner's Amendment/Comment
8. ☐ Examiner's Statement of Reasons for Allowance
9. ☐ Other _____.

Abdelmoniem Elamin
Primary Examiner
Art Unit: 2116

Notice of References Cited	Application/Control No. 11/600,975	Applicant(s)/Patent Under Reexamination HOLMER, BRUCE	
	Examiner Abdelmoniem Elamin	Art Unit 2116	Page 1 of 1

U.S. PATENT DOCUMENTS

*		Document Number Country Code-Number-Kind Code	Date MM-YYYY	Name	Classification
*	A	US-2004/0073591	04-2004	Giacalone, Jean-Pierre	708/650
*	B	US-6,848,011	01-2005	Park et al.	710/14
*	C	US-6,778,179	08-2004	Lavelle et al.	345/557
*	D	US-6,831,617	12-2004	Miyauchi et al.	345/33
*	E	US-6,720,969	04-2004	Lavelle et al.	345/557
*	F	US-6,275,234	08-2001	Iwaki, Tsutomu	345/428
	G	US-			
	H	US-			
	I	US-			
	J	US-			
	K	US-			
	L	US-			
	M	US-			

FOREIGN PATENT DOCUMENTS

*		Document Number Country Code-Number-Kind Code	Date MM-YYYY	Country	Name	Classification
	N					
	O					
	P					
	Q					
	R					
	S					
	T					

NON-PATENT DOCUMENTS

*		Include as applicable: Author, Title Date, Publisher, Edition or Volume, Pertinent Pages)
	U	
	V	
	W	
	X	

*A copy of this reference is not being furnished with this Office action. (See MPEP § 707.05(a).)
Dates in MM-YYYY format are publication dates. Classifications may be US or foreign.

Index of Claims

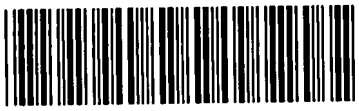

Application/Control No.	Applicant(s)/Patent under Reexamination
11/600,975	HOLMER, BRUCE
Examiner	**Art Unit**
Abdelmoniem Elamin	2116

√	Rejected	–	(Through numeral) Cancelled	N	Non-Elected	A	Appeal
=	Allowed	÷	Restricted	I	Interference	O	Objected

Claim		Date
Final	Original	7/23/07
1	1	=
2	2	=
3	3	=
4	4	=
5	5	=
6	6	=
7	7	=
8	8	=
9	9	=
10	10	=
11	11	=
12	12	=
13	13	=
14	14	=
15	15	=
16	16	=
17	17	=
18	18	=
19	19	=
20	20	=
	21	
	22	
	23	
	24	
	25	
	26	
	27	
	28	
	29	
	30	
	31	
	32	
	33	
	34	
	35	
	36	
	37	
	38	
	39	
	40	
	41	
	42	
	43	
	44	
	45	
	46	
	47	
	48	
	49	
	50	

Claim		Date
Final	Original	
	51	
	52	
	53	
	54	
	55	
	56	
	57	
	58	
	59	
	60	
	61	
	62	
	63	
	64	
	65	
	66	
	67	
	68	
	69	
	70	
	71	
	72	
	73	
	74	
	75	
	76	
	77	
	78	
	79	
	80	
	81	
	82	
	83	
	84	
	85	
	86	
	87	
	88	
	89	
	90	
	91	
	92	
	93	
	94	
	95	
	96	
	97	
	98	
	99	
	100	

Claim		Date
Final	Original	
	101	
	102	
	103	
	104	
	105	
	106	
	107	
	108	
	109	
	110	
	111	
	112	
	113	
	114	
	115	
	116	
	117	
	118	
	119	
	120	
	121	
	122	
	123	
	124	
	125	
	126	
	127	
	128	
	129	
	130	
	131	
	132	
	133	
	134	
	135	
	136	
	137	
	138	
	139	
	140	
	141	
	142	
	143	
	144	
	145	
	146	
	147	
	148	
	149	
	150	

Issue Classification	Application/Control No. 11/600,975	Applicant(s)/Patent under Reexamination HOLMER, BRUCE
	Examiner Abdelmoniem Elamin	Art Unit 2116

ISSUE CLASSIFICATION

ORIGINAL		INTERNATIONAL CLASSIFICATION											
CLASS	SUBCLASS	CLAIMED					NON-CLAIMED						
713	320	G	06	E	1	/04					/		
						/					/		
						/					/		
						/					/		
						/					/		
						/					/		
						/					/		

CROSS REFERENCES				
CLASS	SUBCLASS (ONE SUBCLASS PER BLOCK)			
713	321	322	323	324
	87	89	98	212

(Assistant Examiner) (Date)

(Legal Instruments Examiner) (Date)

A. Elamin 7/23/2007
(Primary Examiner) (Date)

Total Claims Allowed: 20

O.G. Print Claim(s)	O.G. Print Fig.
1	1

☒ **Claims renumbered in the same order as presented by applicant** ☐ CPA ☐ T.D. ☐ R.1.47

Final	Original	Final	Original	Final	Original	Final	Original	Final	Original	Final	Original	Final	Original
	1		31		61		91		121		151		181
	2		32		62		92		122		152		182
	3		33		63		93		123		153		183
	4		34		64		94		124		154		184
	5		35		65		95		125		155		185
	6		36		66		96		126		156		186
	7		37		67		97		127		157		187
	8		38		68		98		128		158		188
	9		39		69		99		129		159		189
	10		40		70		100		130		160		190
	11		41		71		101		131		161		191
	12		42		72		102		132		162		192
	13		43		73		103		133		163		193
	14		44		74		104		134		164		194
	15		45		75		105		135		165		195
	16		46		76		106		136		166		196
	17		47		77		107		137		167		197
	18		48		78		108		138		168		198
	19		49		79		109		139		169		199
	20		50		80		110		140		170		200
	21		51		81		111		141		171		201
	22		52		82		112		142		172		202
	23		53		83		113		143		173		203
	24		54		84		114		144		174		204
	25		55		85		115		145		175		205
	26		56		86		116		146		176		206
	27		57		87		117		147		177		207
	28		58		88		118		148		178		208
	29		59		89		119		149		179		209
	30		60		90		120		150		180		210

Search Notes	Application/Control No.	Applicant(s)/Patent under Reexamination
	11/600,975	HOLMER, BRUCE
	Examiner	Art Unit
	Abdelmoniem Elamin	2116

SEARCHED			
Class	Subclass	Date	Examiner
713	320-324	7/23/2007	AIE
345	87, 89	7/23/2007	AIE
	98, 212	7/23/2007	AIE

INTERFERENCE SEARCHED			
Class	Subclass	Date	Examiner
713	**320-324**	**7/23/2007**	**AIE**
345	87, 89	7/23/2007	AIE
	98, 212	7/23/2007	AIE

SEARCH NOTES (INCLUDING SEARCH STRATEGY)		
	DATE	EXMR
WEST	7/23/2007	AIE
Inventor's name search	7/23/2007	AIE

UNITED STATES PATENT AND TRADEMARK OFFICE

UNITED STATES DEPARTMENT OF COMMERCE
United States Patent and Trademark Office
Address: COMMISSIONER FOR PATENTS
P.O. Box 1450
Alexandria, Virginia 22313-1450
www.uspto.gov

APPLICATION NO.	ISSUE DATE	PATENT NO.	ATTORNEY DOCKET NO.	CONFIRMATION NO.
10/600,975	12/12/2006	7149509	MES/002CON	7158

39550 7590 11/22/2006

KALIKO & YEAGER, L.L.C.
500 NORTH FRANKLIN TURNPIKE
RAMSEY, NJ 07446

ISSUE NOTIFICATION

The projected patent number and issue date are specified above.

Determination of Patent Term Adjustment under 35 U.S.C. 154 (b)
(application filed on or after May 29, 2000)

The Patent Term Adjustment is 247 day(s). Any patent to issue from the above-identified application will include an indication of the adjustment on the front page.

If a Continued Prosecution Application (CPA) was filed in the above-identified application, the filing date that determines Patent Term Adjustment is the filing date of the most recent CPA.

Applicant will be able to obtain more detailed information by accessing the Patent Application Information Retrieval (PAIR) WEB site (http://pair.uspto.gov).

Any questions regarding the Patent Term Extension or Adjustment determination should be directed to the Office of Patent Legal Administration at (571)-272-7702. Questions relating to issue and publication fee payments should be directed to the Customer Service Center of the Office of Patent Publication at (571)-272-4200.

APPLICANT(s) (Please see PAIR WEB site http://pair.uspto.gov for additional applicants):

Michael E. Shanahan, Nyack, NY;

OIPE
OCT 26 2006
PATENT & TRADEMARK OFFICE

Complete and send this form, together with applicable fee(s), to: Mail Mail Stop ISSUE FEE
Commissioner for Patents
P.O. Box 1450
Alexandria, Virginia 22313-1450
or Fax (571)-273-2885

INSTRUCTIONS: This form should be used for transmitting the ISSUE FEE and PUBLICATION FEE (if required). Blocks 1 through 5 should be completed where appropriate. All further correspondence including the Patent, advance orders and notification of maintenance fees will be mailed to the current correspondence address as indicated unless corrected below or directed otherwise in Block 1, by (a) specifying a new correspondence address; and/or (b) indicating a separate "FEE ADDRESS" for maintenance fee notifications.

CURRENT CORRESPONDENCE ADDRESS (Note: Use Block 1 for any change of address)

39550 7590 10/23/2006

KALIKO & YEAGER, L.L.C.
500 NORTH FRANKLIN TURNPIKE
RAMSEY, NJ 07446

Note: A certificate of mailing can only be used for domestic mailings of the Fee(s) Transmittal. This certificate cannot be used for any other accompanying papers. Each additional paper, such as an assignment or formal drawing, must have its own certificate of mailing or transmission.

Certificate of Mailing or Transmission
I hereby certify that this Fee(s) Transmittal is being deposited with the United States Postal Service with sufficient postage for first class mail in an envelope addressed to the Mail Stop ISSUE FEE address above, or being facsimile transmitted to the USPTO (571) 273-2885, on the date indicated below.

Mandy C. Ellis	(Depositor's name)
Mandy C. E	(Signature)
October 26, 2006	(Date)

APPLICATION NO.	FILING DATE	FIRST NAMED INVENTOR	ATTORNEY DOCKET NO.	CONFIRMATION NO.
10/600,975	06/20/2003	Michael E. Shanahan	MES/002CON	7158

TITLE OF INVENTION: METHODS AND APPARATUSES FOR PROGRAMMING USER-DEFINED INFORMATION INTO ELECTRONIC DEVICES

APPLN. TYPE	SMALL ENTITY	ISSUE FEE DUE	PUBLICATION FEE DUE	PREV. PAID ISSUE FEE	TOTAL FEE(S) DUE	DATE DUE
nonprovisional	YES	$700	$300	$0	$1000	01/23/2007

EXAMINER	ART UNIT	CLASS-SUBCLASS
BEAMER, TEMICA M	2617	455-418000

1. Change of correspondence address or indication of "Fee Address" (37 CFR 1.363).
☐ Change of correspondence address (or Change of Correspondence Address form PTO/SB/122) attached.
☐ "Fee Address" indication (or "Fee Address" Indication form PTO/SB/47; Rev 03-02 or more recent) attached. Use of a Customer Number is required.

2. For printing on the patent front page, list
(1) the names of up to 3 registered patent attorneys or agents OR, alternatively,
(2) the name of a single firm (having as a member a registered attorney or agent) and the names of up to 2 registered patent attorneys or agents. If no name is listed, no name will be printed.

1 Kaliko & Yeager
2 Scott H. Kaliko

3. ASSIGNEE NAME AND RESIDENCE DATA TO BE PRINTED ON THE PATENT (print or type)

PLEASE NOTE: Unless an assignee is identified below, no assignee data will appear on the patent. If an assignee is identified below, the document has been filed for recordation as set forth in 37 CFR 3.11. Completion of this form is NOT a substitute for filing an assignment.

(A) NAME OF ASSIGNEE: Twenty Year Innovations, Inc.
(B) RESIDENCE: (CITY and STATE OR COUNTRY): Bronx, NY

Please check the appropriate assignee category or categories (will not be printed on the patent): ☐ Individual ☒ Corporation or other private group entity ☐ Government

4a. The following fee(s) are submitted:
☒ Issue Fee
☒ Publication Fee (No small entity discount permitted)
☐ Advance Order - # of Copies _____

4b. Payment of Fee(s): (Please first reapply any previously paid issue fee shown above)
☐ A check is enclosed.
☒ Payment by credit card. Form PTO-2038 is attached.
☐ The Director is hereby authorized to charge the required fee(s), any deficiency, or credit any overpayment, to Deposit Account Number _____ (enclose an extra copy of this form).

5. Change in Entity Status (from status indicated above)
☒ a. Applicant claims SMALL ENTITY status. See 37 CFR 1.27.
☐ b. Applicant is no longer claiming SMALL ENTITY status. See 37 CFR 1.27(g)(2).

NOTE: The Issue Fee and Publication Fee (if required) will not be accepted from anyone other than the applicant; a registered attorney or agent; or the assignee or other party in interest as shown by the records of the United States Patent and Trademark Office.

Authorized Signature _____ Date October 26, 2006

Typed or printed name Scott H. Kaliko, Esq. Registration No. 45,786

This collection of information is required by 37 CFR 1.311. The information is required to obtain or retain a benefit by the public which is to file (and by the USPTO to process) an application. Confidentiality is governed by 35 U.S.C. 122 and 37 CFR 1.14. This collection is estimated to take 12 minutes to complete, including gathering, preparing, and submitting the completed application form to the USPTO. Time will vary depending upon the individual case. Any comments on the amount of time you require to complete this form and/or suggestions for reducing this burden, should be sent to the Chief Information Officer, U.S. Patent and Trademark Office, U.S. Department of Commerce, P.O. Box 1450, Alexandria, Virginia 22313-1450. DO NOT SEND FEES OR COMPLETED FORMS TO THIS ADDRESS. SEND TO: Commissioner for Patents, P.O. Box 1450, Alexandria, Virginia 22313-1450.

Under the Paperwork Reduction Act of 1995, no persons are required to respond to a collection of information unless it displays a valid OMB control number.

PAGE 2/3 * RCVD AT 10/26/2006 12:52:04 PM [Eastern Daylight Time] * SVR:USPTO-EFXRF-1/5 * DNIS:2732885 * CSID:2018310519 * DURATION (mm-ss):01-36

OIPE IAP78
OCT 26 2006
PATENT & TRADEMARK OFFICE

Scott H. Kaliko
Admitted in New York, New Jersey, and before the United States Patent and Trademark Office

KALIKO & YEAGER
ATTORNEYS AT LAW

Joe P. Yeager
Admitted in New Jersey and Pennsylvania

500 North Franklin Turnpike, Ramsey, NJ 07446
(201) 831-0575 Main Tel
(201) 831-0519 Main Fax

FACSIMILE TRANSMITTAL SHEET

TO: Commissioner for Patents Mail Stop: Issue Fee	FROM: Scott H. Kaliko SENDER'S FAX NUMBER: 201-831-0519 SENDER'S TELEPHONE NUMBER 201-831-0575
COMPANY: United States Patent and Trademark Office	DATE: OCTOBER 26, 2006
RECIPIENT'S FAX NUMBER: 571-273-2885	TOTAL NO. OF PAGES INCLUDING COVER: 3
RECIPIENT'S TELEPHONE NUMBER: 571-272-1000	CLIENT / MATTER:
RE: Application No. 10/600,975	YOUR REFERENCE NUMBER: MES/002 CON

☐ URGENT ☐ FOR REVIEW ☐ PLEASE COMMENT ☐ PLEASE REPLY ☐ PLEASE RECYCLE

NOTES/COMMENTS:

Please confirm receipt of this fax and the below-identified attached parts.

1. Transmittal Form/Certificate of Transmission; and
2. Issue Fee Transmittal
3. Credit Card Payment Form

CONFIDENTIALITY NOTICE

The information contained in this facsimile message is privileged and confidential and is intended only for the use of the individual(s) and/or entity(ies) named above. If you are not the intended recipient, you are hereby notified that any unauthorized disclosure, copying, distribution or taking of any action in reliance on the contents of the information contained herein is strictly prohibited and review by any individual other than the intended recipient shall not constitute a waiver of the attorney-client privilege. If you have received this transmission in error, please immediately notify us by telephone. Thank you.

PAGE 1/3 * RCVD AT 10/26/2006 12:52:04 PM [Eastern Daylight Time] * SVR:USPTO-EFXRF-1/5 * DNIS:2732885 * CSID:2018310519 * DURATION (mm-ss):01-36

UNITED STATES PATENT AND TRADEMARK OFFICE

UNITED STATES DEPARTMENT OF COMMERCE
United States Patent and Trademark Office
Address: COMMISSIONER FOR PATENTS
P.O. Box 1450
Alexandria, Virginia 22313-1450
www.uspto.gov

NOTICE OF ALLOWANCE AND FEE(S) DUE

39550 7590 10/23/2006

KALIKO & YEAGER, L.L.C.
500 NORTH FRANKLIN TURNPIKE
RAMSEY, NJ 07446

EXAMINER	
BEAMER, TEMICA M	
ART UNIT	PAPER NUMBER
2617	

DATE MAILED: 10/23/2006

APPLICATION NO.	FILING DATE	FIRST NAMED INVENTOR	ATTORNEY DOCKET NO.	CONFIRMATION NO.
10/600,975	06/20/2003	Michael E. Shanahan	MES/002CON	7158

TITLE OF INVENTION: METHODS AND APPARATUSES FOR PROGRAMMING USER-DEFINED INFORMATION INTO ELECTRONIC DEVICES

APPLN. TYPE	SMALL ENTITY	ISSUE FEE DUE	PUBLICATION FEE DUE	PREV. PAID ISSUE FEE	TOTAL FEE(S) DUE	DATE DUE
nonprovisional	YES	$700	$300	$0	$1000	01/23/2007

THE APPLICATION IDENTIFIED ABOVE HAS BEEN EXAMINED AND IS ALLOWED FOR ISSUANCE AS A PATENT. PROSECUTION ON THE MERITS IS CLOSED. THIS NOTICE OF ALLOWANCE IS NOT A GRANT OF PATENT RIGHTS. THIS APPLICATION IS SUBJECT TO WITHDRAWAL FROM ISSUE AT THE INITIATIVE OF THE OFFICE OR UPON PETITION BY THE APPLICANT. SEE 37 CFR 1.313 AND MPEP 1308.

THE ISSUE FEE AND PUBLICATION FEE (IF REQUIRED) MUST BE PAID WITHIN THREE MONTHS FROM THE MAILING DATE OF THIS NOTICE OR THIS APPLICATION SHALL BE REGARDED AS ABANDONED. THIS STATUTORY PERIOD CANNOT BE EXTENDED. SEE 35 U.S.C. 151. THE ISSUE FEE DUE INDICATED ABOVE DOES NOT REFLECT A CREDIT FOR ANY PREVIOUSLY PAID ISSUE FEE IN THIS APPLICATION. IF AN ISSUE FEE HAS PREVIOUSLY BEEN PAID IN THIS APPLICATION (AS SHOWN ABOVE), THE RETURN OF PART B OF THIS FORM WILL BE CONSIDERED A REQUEST TO REAPPLY THE PREVIOUSLY PAID ISSUE FEE TOWARD THE ISSUE FEE NOW DUE.

HOW TO REPLY TO THIS NOTICE:

I. Review the SMALL ENTITY status shown above.

If the SMALL ENTITY is shown as YES, verify your current SMALL ENTITY status:

A. If the status is the same, pay the TOTAL FEE(S) DUE shown above.

B. If the status above is to be removed, check box 5b on Part B - Fee(s) Transmittal and pay the PUBLICATION FEE (if required) and twice the amount of the ISSUE FEE shown above, or

If the SMALL ENTITY is shown as NO:

A. Pay TOTAL FEE(S) DUE shown above, or

B. If applicant claimed SMALL ENTITY status before, or is now claiming SMALL ENTITY status, check box 5a on Part B - Fee(s) Transmittal and pay the PUBLICATION FEE (if required) and 1/2 the ISSUE FEE shown above.

II. PART B - FEE(S) TRANSMITTAL, or its equivalent, must be completed and returned to the United States Patent and Trademark Office (USPTO) with your ISSUE FEE and PUBLICATION FEE (if required). If you are charging the fee(s) to your deposit account, section "4b" of Part B - Fee(s) Transmittal should be completed and an extra copy of the form should be submitted. If an equivalent of Part B is filed, a request to reapply a previously paid issue fee must be clearly made, and delays in processing may occur due to the difficulty in recognizing the paper as an equivalent of Part B.

III. All communications regarding this application must give the application number. Please direct all communications prior to issuance to Mail Stop ISSUE FEE unless advised to the contrary.

IMPORTANT REMINDER: Utility patents issuing on applications filed on or after Dec. 12, 1980 may require payment of maintenance fees. It is patentee's responsibility to ensure timely payment of maintenance fees when due.

PTOL-85 (Rev. 07/06) Approved for use through 04/30/2007.

PART B - FEE(S) TRANSMITTAL

Complete and send this form, together with applicable fee(s), to: Mail Mail Stop ISSUE FEE
Commissioner for Patents
P.O. Box 1450
Alexandria, Virginia 22313-1450
or Fax (571)-273-2885

INSTRUCTIONS: This form should be used for transmitting the ISSUE FEE and PUBLICATION FEE (if required). Blocks 1 through 5 should be completed where appropriate. All further correspondence including the Patent, advance orders and notification of maintenance fees will be mailed to the current correspondence address as indicated unless corrected below or directed otherwise in Block 1, by (a) specifying a new correspondence address; and/or (b) indicating a separate "FEE ADDRESS" for maintenance fee notifications.

CURRENT CORRESPONDENCE ADDRESS (Note: Use Block 1 for any change of address)

39550 7590 10/23/2006

KALIKO & YEAGER, L.L.C.
500 NORTH FRANKLIN TURNPIKE
RAMSEY, NJ 07446

Note: A certificate of mailing can only be used for domestic mailings of the Fee(s) Transmittal. This certificate cannot be used for any other accompanying papers. Each additional paper, such as an assignment or formal drawing, must have its own certificate of mailing or transmission.

Certificate of Mailing or Transmission

I hereby certify that this Fee(s) Transmittal is being deposited with the United States Postal Service with sufficient postage for first class mail in an envelope addressed to the Mail Stop ISSUE FEE address above, or being facsimile transmitted to the USPTO (571) 273-2885, on the date indicated below.

(Depositor's name)

(Signature)

(Date)

APPLICATION NO.	FILING DATE	FIRST NAMED INVENTOR	ATTORNEY DOCKET NO.	CONFIRMATION NO.
10/600,975	06/20/2003	Michael E. Shanahan	MES/002CON	7158

TITLE OF INVENTION: METHODS AND APPARATUSES FOR PROGRAMMING USER-DEFINED INFORMATION INTO ELECTRONIC DEVICES

APPLN. TYPE	SMALL ENTITY	ISSUE FEE DUE	PUBLICATION FEE DUE	PREV. PAID ISSUE FEE	TOTAL FEE(S) DUE	DATE DUE
nonprovisional	YES	$700	$300	$0	$1000	01/23/2007

EXAMINER	ART UNIT	CLASS-SUBCLASS
BEAMER, TEMICA M	2617	455-418000

1. Change of correspondence address or indication of "Fee Address" (37 CFR 1.363).

☐ Change of correspondence address (or Change of Correspondence Address form PTO/SB/122) attached.

☐ "Fee Address" indication (or "Fee Address" Indication form PTO/SB/47; Rev 03-02 or more recent) attached. **Use of a Customer Number is required.**

2. For printing on the patent front page, list

(1) the names of up to 3 registered patent attorneys or agents OR, alternatively,

(2) the name of a single firm (having as a member a registered attorney or agent) and the names of up to 2 registered patent attorneys or agents. If no name is listed, no name will be printed.

1 _____

2 _____

3 _____

3. ASSIGNEE NAME AND RESIDENCE DATA TO BE PRINTED ON THE PATENT (print or type)

PLEASE NOTE: Unless an assignee is identified below, no assignee data will appear on the patent. If an assignee is identified below, the document has been filed for recordation as set forth in 37 CFR 3.11. Completion of this form is NOT a substitute for filing an assignment.

(A) NAME OF ASSIGNEE

(B) RESIDENCE: (CITY and STATE OR COUNTRY)

Please check the appropriate assignee category or categories (will not be printed on the patent) : ☐ Individual ☐ Corporation or other private group entity ☐ Government

4a. The following fee(s) are submitted:

☐ Issue Fee

☐ Publication Fee (No small entity discount permitted)

☐ Advance Order - # of Copies _____

4b. Payment of Fee(s): **(Please first reapply any previously paid issue fee shown above)**

☐ A check is enclosed.

☐ Payment by credit card. Form PTO-2038 is attached.

☐ The Director is hereby authorized to charge the required fee(s), any deficiency, or credit any overpayment, to Deposit Account Number _____ (enclose an extra copy of this form).

5. **Change in Entity Status** (from status indicated above)

☐ a. Applicant claims SMALL ENTITY status. See 37 CFR 1.27.

☐ b. Applicant is no longer claiming SMALL ENTITY status. See 37 CFR 1.27(g)(2).

NOTE: The Issue Fee and Publication Fee (if required) will not be accepted from anyone other than the applicant; a registered attorney or agent; or the assignee or other party in interest as shown by the records of the United States Patent and Trademark Office.

Authorized Signature _____ Date _____

Typed or printed name _____ Registration No. _____

This collection of information is required by 37 CFR 1.311. The information is required to obtain or retain a benefit by the public which is to file (and by the USPTO to process) an application. Confidentiality is governed by 35 U.S.C. 122 and 37 CFR 1.14. This collection is estimated to take 12 minutes to complete, including gathering, preparing, and submitting the completed application form to the USPTO. Time will vary depending upon the individual case. Any comments on the amount of time you require to complete this form and/or suggestions for reducing this burden, should be sent to the Chief Information Officer, U.S. Patent and Trademark Office, U.S. Department of Commerce, P.O. Box 1450, Alexandria, Virginia 22313-1450. DO NOT SEND FEES OR COMPLETED FORMS TO THIS ADDRESS. SEND TO: Commissioner for Patents, P.O. Box 1450, Alexandria, Virginia 22313-1450.

Under the Paperwork Reduction Act of 1995, no persons are required to respond to a collection of information unless it displays a valid OMB control number.

UNITED STATES PATENT AND TRADEMARK OFFICE

UNITED STATES DEPARTMENT OF COMMERCE
United States Patent and Trademark Office
Address: COMMISSIONER FOR PATENTS
P.O. Box 1450
Alexandria, Virginia 22313-1450
www.uspto.gov

APPLICATION NO.	FILING DATE	FIRST NAMED INVENTOR	ATTORNEY DOCKET NO.	CONFIRMATION NO.
10/600,975	06/20/2003	Michael E. Shanahan	MES/002CON	7158

39550 7590 10/23/2006

KALIKO & YEAGER, L.L.C.
500 NORTH FRANKLIN TURNPIKE
RAMSEY, NJ 07446

EXAMINER	
BEAMER, TEMICA M	
ART UNIT	PAPER NUMBER
2617	

DATE MAILED: 10/23/2006

Determination of Patent Term Adjustment under 35 U.S.C. 154 (b)
(application filed on or after May 29, 2000)

The Patent Term Adjustment to date is 247 day(s). If the issue fee is paid on the date that is three months after the mailing date of this notice and the patent issues on the Tuesday before the date that is 28 weeks (six and a half months) after the mailing date of this notice, the Patent Term Adjustment will be 247 day(s).

If a Continued Prosecution Application (CPA) was filed in the above-identified application, the filing date that determines Patent Term Adjustment is the filing date of the most recent CPA.

Applicant will be able to obtain more detailed information by accessing the Patent Application Information Retrieval (PAIR) WEB site (http://pair.uspto.gov).

Any questions regarding the Patent Term Extension or Adjustment determination should be directed to the Office of Patent Legal Administration at (571)-272-7702. Questions relating to issue and publication fee payments should be directed to the Customer Service Center of the Office of Patent Publication at 1-(888)-786-0101 or (571)-272-4200.

PTOL-85 (Rev. 07/06) Approved for use through 04/30/2007.

Notice of Allowability	Application No.	Applicant(s)	
	10/600,975	SHANAHAN, MICHAEL E.	
	Examiner	Art Unit	
	Temica M. Beamer	2617	

-- The MAILING DATE of this communication appears on the cover sheet with the correspondence address--

All claims being allowable, PROSECUTION ON THE MERITS IS (OR REMAINS) CLOSED in this application. If not included herewith (or previously mailed), a Notice of Allowance (PTOL-85) or other appropriate communication will be mailed in due course. **THIS NOTICE OF ALLOWABILITY IS NOT A GRANT OF PATENT RIGHTS.** This application is subject to withdrawal from issue at the initiative of the Office or upon petition by the applicant. See 37 CFR 1.313 and MPEP 1308.

1. ☒ This communication is responsive to *amendment filed 7/21/2006*.

2. ☒ The allowed claim(s) is/are *2-82 (renumbered as claims 1-8,15-41,46-57,9-14,42-45 and 58-81)*.

3. ☐ Acknowledgment is made of a claim for foreign priority under 35 U.S.C. § 119(a)-(d) or (f).
   a) ☐ All b) ☐ Some* c) ☐ None of the:
      1. ☐ Certified copies of the priority documents have been received.
      2. ☐ Certified copies of the priority documents have been received in Application No. _____ .
      3. ☐ Copies of the certified copies of the priority documents have been received in this national stage application from the International Bureau (PCT Rule 17.2(a)).

   * Certified copies not received: _____.

Applicant has THREE MONTHS FROM THE "MAILING DATE" of this communication to file a reply complying with the requirements noted below. Failure to timely comply will result in ABANDONMENT of this application.
THIS THREE-MONTH PERIOD IS NOT EXTENDABLE.

4. ☐ A SUBSTITUTE OATH OR DECLARATION must be submitted. Note the attached EXAMINER'S AMENDMENT or NOTICE OF INFORMAL PATENT APPLICATION (PTO-152) which gives reason(s) why the oath or declaration is deficient.

5. ☐ CORRECTED DRAWINGS (as "replacement sheets") must be submitted.
   (a) ☐ including changes required by the Notice of Draftsperson's Patent Drawing Review (PTO-948) attached
      1) ☐ hereto or 2) ☐ to Paper No./Mail Date _____.
   (b) ☐ including changes required by the attached Examiner's Amendment / Comment or in the Office action of Paper No./Mail Date _____.

Identifying indicia such as the application number (see 37 CFR 1.84(c)) should be written on the drawings in the front (not the back) of each sheet. Replacement sheet(s) should be labeled as such in the header according to 37 CFR 1.121(d).

6. ☐ DEPOSIT OF and/or INFORMATION about the deposit of BIOLOGICAL MATERIAL must be submitted. Note the attached Examiner's comment regarding REQUIREMENT FOR THE DEPOSIT OF BIOLOGICAL MATERIAL.

Attachment(s)

1. ☐ Notice of References Cited (PTO-892)
2. ☐ Notice of Draftperson's Patent Drawing Review (PTO-948)
3. ☒ Information Disclosure Statements (PTO/SB/08), Paper No./Mail Date _____
4. ☐ Examiner's Comment Regarding Requirement for Deposit of Biological Material
5. ☐ Notice of Informal Patent Application
6. ☐ Interview Summary (PTO-413), Paper No./Mail Date _____ .
7. ☐ Examiner's Amendment/Comment
8. ☐ Examiner's Statement of Reasons for Allowance
9. ☐ Other _____.

Temica M. Beamer
TEMICA BEAMER
PRIMARY EXAMINER

Temica M. Beamer
Primary Examiner
Art Unit: 2617

PTO/SB/08A (07-06)
Approved for use through 07/31/2006. OMB 0651-0031
U.S. Patent and Trademark Office: U.S. DEPARTMENT OF COMMERCE
Under the Paperwork Reduction Act of 1995, no persons are required to respond to a collection of information unless it contains a valid OMB control number.

Substitute for form 1449/PTO

INFORMATION DISCLOSURE STATEMENT BY APPLICANT

(Use as many sheets as necessary)

Sheet 1 of 1

Complete if Known	
Application Number	10/600,975
Filing Date	June 20, 2003
First Named Inventor	Michael E. Shanahan
Art Unit	2617
Examiner Name	Temica M. Beamer
Attorney Docket Number	MES/002 CON

RECEIVED
CENTRAL FAX CENTER
AUG 15 2006

U.S. PATENT DOCUMENTS

Examiner Initials*	Cite No.[1]	Document Number Number-Kind Code[2] (if known)	Publication Date MM-DD-YYYY	Name of Patentee or Applicant of Cited Document	Pages, Columns, Lines, Where Relevant Passages or Relevant Figures Appear
TMB		US- 6,845,398	01-18-2005	Galansky et al.	
TMB		US- 6,829,618	12-07-2004	Abraham et al.	
		US-			
		US-			
		US-			
		US-			
		US-			
		US-			
		US-			
		US-			
		US-			
		US-			
		US-			
		US-			
		US-			
		US-			
		US-			
		US-			
		US-			

FOREIGN PATENT DOCUMENTS

Examiner Initials*	Cite No.[1]	Foreign Patent Document Country Code[3]-Number[4]-Kind Code[5] (if known)	Publication Date MM-DD-YYYY	Name of Patentee or Applicant of Cited Document	Pages, Columns, Lines, Where Relevant Passages Or Relevant Figures Appear	T[6]

Examiner Signature	Temica M. Beamer	Date Considered	10/16/06

*EXAMINER: Initial if reference considered, whether or not citation is in conformance with MPEP 609. Draw line through citation if not in conformance and not considered. Include copy of this form with next communication to applicant. [1] Applicant's unique citation designation number (optional). [2] See Kinds Codes of USPTO Patent Documents at www.uspto.gov or MPEP 901.04. [3] Enter Office that issued the document, by the two-letter code (WIPO Standard ST.3). [4] For Japanese patent documents, the indication of the year of the reign of the Emperor must precede the serial number of the patent document. [5] Kind of document by the appropriate symbols as indicated on the document under WIPO Standard ST.16 if possible. [6] Applicant is to place a check mark here if English language Translation is attached.

This collection of information is required by 37 CFR 1.97 and 1.98. The information is required to obtain or retain a benefit by the public which is to file (and by the USPTO to process) an application. Confidentiality is governed by 35 U.S.C. 122 and 37 CFR 1.14. This collection is estimated to take 2 hours to complete, including gathering, preparing, and submitting the completed application form to the USPTO. Time will vary depending upon the individual case. Any comments on the amount of time you require to complete this form and/or suggestions for reducing this burden, should be sent to the Chief Information Officer, U.S. Patent and Trademark Office, P.O. Box 1450, Alexandria, VA 22313-1450. DO NOT SEND FEES OR COMPLETED FORMS TO THIS ADDRESS. SEND TO: Commissioner for Patents, P.O. Box 1450, Alexandria, VA 22313-1450.

If you need assistance in completing the form, call 1-800-PTO-9199 (1-800-786-9199) and select option 2.

RECEIVED
CENTRAL FAX CENTER

SEP 21 2006

PTO/SB/08A (07-05)
Approved for use through 07/31/2006. OMB 0651-0031
U.S. Patent and Trademark Office: U.S. DEPARTMENT OF COMMERCE
Under the Paperwork Reduction Act of 1995, no persons are required to respond to a collection of information unless it contains a valid OMB control number.

Substitute for form 1449/PTO

INFORMATION DISCLOSURE STATEMENT BY APPLICANT

(Use as many sheets as necessary)

Sheet 1 of 1

Complete if Known	
Application Number	10/600,975
Filing Date	June 20, 2003
First Named Inventor	Michael E. Shanahan
Art Unit	2617
Examiner Name	Temica M. Beamer
Attorney Docket Number	MES/002 CON

U. S. PATENT DOCUMENTS

Examiner Initials*	Cite No.[1]	Document Number Number-Kind Code[2] (if known)	Publication Date MM-DD-YYYY	Name of Patentee or Applicant of Cited Document	Pages, Columns, Lines, Where Relevant Passages or Relevant Figures Appear
TMB		US- 6,151,491	11-21-2000	Farris et al.	
		US-			
		US-			
		US-			
		US-			
		US-			
		US-			
		US-			
		US-			
		US-			
		US-			
		US-			
		US-			
		US-			
		US-			
		US-			
		US-			
		US-			

FOREIGN PATENT DOCUMENTS

Examiner Initials*	Cite No.[1]	Foreign Patent Document Country Code[3]-Number[4]-Kind Code[5] (if known)	Publication Date MM-DD-YYYY	Name of Patentee or Applicant of Cited Document	Pages, Columns, Lines, Where Relevant Passages Or Relevant Figures Appear	T[6]

Examiner Signature	Temica M. Beamer	Date Considered	10/16/06

*EXAMINER: Initial if reference considered, whether or not citation is in conformance with MPEP 609. Draw line through citation if not in conformance and not considered. Include copy of this form with next communication to applicant. [1] Applicant's unique citation designation number (optional). [2] See Kinds Codes of USPTO Patent Documents at www.uspto.gov or MPEP 901.04. [3] Enter Office that issued the document, by the two-letter code (WIPO Standard ST.3). [4] For Japanese patent documents, the indication of the year of the reign of the Emperor must precede the serial number of the patent document. [5] Kind of document by the appropriate symbols as indicated on the document under WIPO Standard ST.16 if possible. [6] Applicant is to place a check mark here if English language Translation is attached.

This collection of information is required by 37 CFR 1.97 and 1.98. The information is required to obtain or retain a benefit by the public which is to file (and by the USPTO to process) an application. Confidentiality is governed by 35 U.S.C. 122 and 37 CFR 1.14. This collection is estimated to take 2 hours to complete, including gathering, preparing, and submitting the completed application form to the USPTO. Time will vary depending upon the individual case. Any comments on the amount of time you require to complete this form and/or suggestions for reducing this burden, should be sent to the Chief Information Officer, U.S. Patent and Trademark Office, P.O. Box 1450, Alexandria, VA 22313-1450. DO NOT SEND FEES OR COMPLETED FORMS TO THIS ADDRESS. SEND TO: Commissioner for Patents, P.O. Box 1450, Alexandria, VA 22313-1450.

If you need assistance in completing the form, call 1-800-PTO-9199 (1-800-786-9199) and select option 2.

RECEIVED
CENTRAL FAX CENTER
OCT 0 5 2006

PTO/SB/08A (07-05)
Approved for use through 07/31/2006. OMB 0651-0031
U.S. Patent and Trademark Office; U.S. DEPARTMENT OF COMMERCE
Under the Paperwork Reduction Act of 1995, no persons are required to respond to a collection of information unless it contains a valid OMB control number.

Substitute for form 1449/PTO

INFORMATION DISCLOSURE STATEMENT BY APPLICANT

(Use as many sheets as necessary)

Sheet 1 of 1

Complete if Known	
Application Number	10/600,975
Filing Date	June 20, 2003
First Named Inventor	Michael E. Shanahan
Art Unit	2617
Examiner Name	Temica M. Beamer
Attorney Docket Number	MES/002 CON

U.S. PATENT DOCUMENTS

Examiner Initials*	Cite No.[1]	Document Number Number-Kind Code[2] (if known)	Publication Date MM-DD-YYYY	Name of Patentee or Applicant of Cited Document	Pages, Columns, Lines, Where Relevant Passages or Relevant Figures Appear
TMB		US- 5,577,190	11-19-1996	Peters	
		US-			
		US-			
		US-			
		US-			
		US-			
		US-			
		US-			
		US-			
		US-			
		US-			
		US-			
		US-			
		US-			
		US-			
		US-			
		US-			
		US-			
		US-			
		US-			

FOREIGN PATENT DOCUMENTS

Examiner Initials*	Cite No.[1]	Foreign Patent Document Country Code[3] Number[4] Kind Code[5] (if known)	Publication Date MM-DD-YYYY	Name of Patentee or Applicant of Cited Document	Pages, Columns, Lines, Where Relevant Passages Or Relevant Figures Appear	T[6]
TMB		CA Office Action copy Included	9-19-2006			

Examiner Signature: Temica M. Beamer Date Considered: 10/16/06

*EXAMINER: Initial if reference considered, whether or not citation is in conformance with MPEP 609. Draw line through citation if not in conformance and not considered. Include copy of this form with next communication to applicant. [1] Applicant's unique citation designation number (optional). [2] See Kinds Codes of USPTO Patent Documents at www.uspto.gov or MPEP 901.04. [3] Enter Office that issued the document, by the two-letter code (WIPO Standard ST.3). [4] For Japanese patent documents, the indication of the year of the reign of the Emperor must precede the serial number of the patent document. [5] Kind of document by the appropriate symbols as indicated on the document under WIPO Standard ST.16 if possible. [6] Applicant is to place a check mark here if English language Translation is attached.

This collection of information is required by 37 CFR 1.97 and 1.98. The information is required to obtain or retain a benefit by the public which is to file (and by the USPTO to process) an application. Confidentiality is governed by 35 U.S.C. 122 and 37 CFR 1.14. This collection is estimated to take 2 hours to complete, including gathering, preparing, and submitting the completed application form to the USPTO. Time will vary depending upon the individual case. Any comments on the amount of time you require to complete this form and/or suggestions for reducing this burden, should be sent to the Chief Information Officer, U.S. Patent and Trademark Office, P.O. Box 1450, Alexandria, VA 22313-1450. DO NOT SEND FEES OR COMPLETED FORMS TO THIS ADDRESS. SEND TO: **Commissioner for Patents, P.O. Box 1450, Alexandria, VA 22313-1450.**

If you need assistance in completing the form, call 1-800-PTO-9199 (1-800-786-9199) and select option 2.

OIPE JUL 21 2006 PATENT & TRADEMARK OFFICE

PTO/SB/08A (07-05)
Approved for use through 07/31/2006. OMB 0651-0031
U.S. Patent and Trademark Office; U.S. DEPARTMENT OF COMMERCE
Under the Paperwork Reduction Act of 1995, no persons are required to respond to a collection of information unless it contains a valid OMB control number.

Substitute for form 1449/PTO

INFORMATION DISCLOSURE STATEMENT BY APPLICANT

(Use as many sheets as necessary)

Sheet 1 of 1

Complete If Known	
Application Number	10/600,975
Filing Date	June 20, 2003
First Named Inventor	Michael E. Shanahan
Art Unit	2617
Examiner Name	Temica M. Beamer
Attorney Docket Number	MES/002 CON

U. S. PATENT DOCUMENTS

Examiner Initials*	Cite No.[1]	Document Number Number-Kind Code[2] (if known)	Publication Date MM-DD-YYYY	Name of Patentee or Applicant of Cited Document	Pages, Columns, Lines, Where Relevant Passages or Relevant Figures Appear
TMB		US- 6,928,468	08-09-2005	Leersmakers	
TMB		US- 6,477,580	11-05-2002	Bowman-Amulah	
TMB		US- 6,198,941	03-06-2001	Aho et al.	
TMB		US- 6,014,569	01-11-2000	Bottum	
TMB		US- 2005/0054379	03-10-2005	Cao et al.	
		US-			
		US-			
		US-			
		US-			
		US-			
		US-			
		US-			
		US-			
		US-			
		US-			
		US-			
		US-			
		US-			
		US-			

FOREIGN PATENT DOCUMENTS

Examiner Initials*	Cite No.[1]	Foreign Patent Document Country Code[3]-Number[4]-Kind Code[5] (if known)	Publication Date MM-DD-YYYY	Name of Patentee or Applicant of Cited Document	Pages, Columns, Lines, Where Relevant Passages Or Relevant Figures Appear	T[6]

Examiner Signature	Temica M. Beamer	Date Considered	10/16/04

*EXAMINER: Initial if reference considered, whether or not citation is in conformance with MPEP 609. Draw line through citation if not in conformance and not considered. Include copy of this form with next communication to applicant. [1]Applicant's unique citation designation number (optional). [2]See Kinds Codes of USPTO Patent Documents at www.uspto.gov or MPEP 901.04. [3]Enter Office that issued the document, by the two-letter code (WIPO Standard ST.3). [4]For Japanese patent documents, the indication of the year of the reign of the Emperor must precede the serial number of the patent document. [5]Kind of document by the appropriate symbols as indicated on the document under WIPO Standard ST.16 if possible. [6]Applicant is to place a check mark here if English language Translation is attached.

This collection of information is required by 37 CFR 1.97 and 1.98. The information is required to obtain or retain a benefit by the public which is to file (and by the USPTO to process) an application. Confidentiality is governed by 35 U.S.C. 122 and 37 CFR 1.14. This collection is estimated to take 2 hours to complete, including gathering, preparing, and submitting the completed application form to the USPTO. Time will vary depending upon the individual case. Any comments on the amount of time you require to complete this form and/or suggestions for reducing this burden, should be sent to the Chief Information Officer, U.S. Patent and Trademark Office, P.O. Box 1450, Alexandria, VA 22313-1450. DO NOT SEND FEES OR COMPLETED FORMS TO THIS ADDRESS. **SEND TO: Commissioner for Patents, P.O. Box 1450, Alexandria, VA 22313-1450.**

If you need assistance in completing the form, call 1-800-PTO-9199 (1-800-786-9199) and select option 2.

Issue Classification	Application/Control No.	Applicant(s)/Patent under Reexamination	
	10/600,975	SHANAHAN, MICHAEL E.	
	Examiner	Art Unit	
	Temica M. Beamer	2617	

ISSUE CLASSIFICATION

ORIGINAL					CROSS REFERENCE(S)							
CLASS				SUBCLASS	CLASS	SUBCLASS (ONE SUBCLASS PER BLOCK)						
455				418	455	567	557					
INTERNATIONAL CLASSIFICATION												
H	0	4	M	3/00								
				/								
				/								
				/								
				/								

(Assistant Examiner) (Date)

(Legal Instruments Examiner) (Date)

Temica M. Beamer
TEMICA BEAMER
PRIMARY EXAMINER 10/14/04
(Primary Examiner) (Date)

Total Claims Allowed: 81

O.G. Print Claim(s)	O.G. Print Fig.
1	7

☐ Claims renumbered in the same order as presented by applicant ☐ CPA ☒ T.D. ☐ R.1.47

Final	Original	Final	Original	Final	Original	Final	Original	Final	Original	Final	Original	Final	Original
	1	36	31	60	61		91		121		151		181
1	2	37	32	61	62		92		122		152		182
2	3	38	33	62	63		93		123		153		183
3	4	39	34	63	64		94		124		154		184
4	5	40	35	64	65		95		125		155		185
5	6	41	36	65	66		96		126		156		186
6	7	46	37	66	67		97		127		157		187
7	8	47	38	67	68		98		128		158		188
8	9	48	39	68	69		99		129		159		189
15	10	49	40	69	70		100		130		160		190
16	11	50	41	70	71		101		131		161		191
17	12	51	42	71	72		102		132		162		192
18	13	52	43	72	73		103		133		163		193
19	14	53	44	73	74		104		134		164		194
20	15	54	45	74	75		105		135		165		195
21	16	55	46	75	76		106		136		166		196
22	17	56	47	76	77		107		137		167		197
23	18	57	48	77	78		108		138		168		198
24	19	9	49	78	79		109		139		169		199
25	20	10	50	79	80		110		140		170		200
26	21	11	51	80	81		111		141		171		201
27	22	12	52	81	82		112		142		172		202
28	23	13	53		83		113		143		173		203
29	24	14	54		84		114		144		174		204
30	25	42	55		85		115		145		175		205
31	26	43	56		86		116		146		176		206
32	27	44	57		87		117		147		177		207
33	28	45	58		88		118		148		178		208
34	29	58	59		89		119		149		179		209
35	30	59	60		90		120		150		180		210

Search Notes	Application/Control No.	Applicant(s)/Patent under Reexamination	
	10/600,975	SHANAHAN, MICHAEL E.	
	Examiner	Art Unit	
	Temica M. Beamer	2617	

SEARCHED			
Class	Subclass	Date	Examiner
Updated	previous search	10/16/2006	TMB

INTERFERENCE SEARCHED			
Class	Subclass	Date	Examiner
455	**418**	10/16/2006	**TMB**
455	557	10/16/2006	TMB
455	567	10/16/2006	TMB
PGPUB text search		10/16/2006	TMB

SEARCH NOTES (INCLUDING SEARCH STRATEGY)		
	DATE	EXMR
WEST text search	10/16/2006	TMB

WEST Search History

Hide Items | Restore | Clear | Cancel

DATE: Monday, October 16, 2006

Hide?	Set Name	Query	Hit Count
	DB=PGPB; PLUR=YES; OP=OR		
☐	L31	(connect$3 and remote and database and video and indicia and file).clm.	3
☐	L30	(customiz$3 and indicia and video and files and incoming and call).clm.	0
	DB=PGPB,USPT; PLUR=YES; OP=OR		
☐	L29	ringtone and L28	20
☐	L28	(wireless or cellular) and L27	1020
☐	L27	L24 and (phone or telephone) and download$3	1310
☐	L26	(video or audio) near5 download$3 and L25	23
☐	L25	L22 and L24	157
☐	L24	video near3 clip with audio	3768
☐	L23	L21 and L22	321
☐	L22	455/$.ccls.	80603
☐	L21	video near9 audio same download$3	5294
☐	L20	455/$.ccls. and L19	26
☐	L19	video near7 audio and L15	157
☐	L18	ringtone and L17	1
☐	L17	download$3 near8 (video or image) and L16	22
☐	L16	455/$.ccls. and L15	75
☐	L15	incoming adj call near8 (image or video) and (phone or telephone) same (cellular or wireless)	266
☐	L14	video near6 call and L7	15
☐	L13	caller near3 id$12 same video and L12	45
☐	L12	download$3 near5 video and (phone or telephone) near10 (cellular or wireless)	1533
☐	L11	L7 and L10	2
☐	L10	download$3 near5 ringtone and (phone or telephone) near10 (cellular or wireless)	67
☐	L9	L7 and L8	22
☐	L8	(image or video or picture) near8 display$3 same (incoming or receiv$3) near4 call	1305
☐	L7	(455/415).ccls.	488
☐	L6	(sample or preview) and L4	10

☐	L5	video near6 brows$3 same select$3 and L4	1
☐	L4	455/$.ccls. and L3	54
☐	L3	video near5 (file or clip) same download$3 same (phone or telephone) and (cellular or wireless)	294
☐	L2	6385305.pn.	1
☐	L1	6496692.pn.	1

END OF SEARCH HISTORY

RECEIVED
CENTRAL FAX CENTER
OCT 0 5 2006

KALIKO & YEAGER
ATTORNEYS AT LAW
A LIMITED LIABILITY CORPORATION

500 North Franklin Turnpike, Ramsey, NJ 07446
(201) 831-0575 Main Tel
(201) 831-0519 Main Fax

FACSIMILE TRANSMITTAL SHEET

TO: Commissioner for Patents	FROM: Scott H. Kaliko, Esq. SENDER'S FAX NUMBER: 201-831-0519 SENDER'S TELEPHONE NUMBER: 201-831-0575
COMPANY: United States Patent & Trademark Office	DATE: OCTOBER 5, 2006
RECIPIENT'S FAX NUMBER: 571-273-8300	TOTAL NO. OF PAGES INCLUDING COVER: 8 Pages
RECIPIENT'S TELEPHONE NUMBER:	CLIENT / MATTER:
RE: Application No. 10/600,975	YOUR REFERENCE NUMBER: MES/002 CON

☐ URGENT ☐ FOR REVIEW ☐ PLEASE COMMENT ☐ PLEASE REPLY ☐ PLEASE RECYCLE

NOTES/COMMENTS:

Please confirm receipt of this fax and the below-identified attached parts.

1. Transmittal Form/Certificate of Transmission; and
2. Information Disclosure Statement; and
3. PTO Form 1449; and
4. Copy of Canadian Office Action

CONFIDENTIALITY NOTICE

The information contained in this facsimile message is privileged and confidential and is intended only for the use of the individual(s) and/or entity(ies) named above. If you are not the intended recipient, you are hereby notified that any unauthorized disclosure, copying, distribution or taking of any action in reliance on the contents of the information contained herein is strictly prohibited and review by any individual other than the intended recipient shall not constitute a waiver of the attorney-client privilege. If you have received this transmission in error, please immediately notify us by telephone. Thank you.

RECEIVED
CENTRAL FAX CENTER
OCT 0 5 2006

PTO/SB/21 (09-04)
Approved for use through 07/31/2006. OMB 0651-0031
U.S. Patent and Trademark Office; U.S. DEPARTMENT OF COMMERCE
Under the Paperwork Reduction Act of 1995, no persons are required to respond to a collection of information unless it displays a valid OMB control number.

TRANSMITTAL FORM

(to be used for all correspondence after initial filing)

Total Number of Pages in This Submission: 7

Application Number	10/600,975
Filing Date	June 20, 2003
First Named Inventor	Michael E. Shanahan
Art Unit	2617
Examiner Name	Temica M. Beamer
Attorney Docket Number	MES/002 CON

ENCLOSURES *(Check all that apply)*

- ☐ Fee Transmittal Form
  - ☐ Fee Attached
- ☐ Amendment/Reply
  - ☐ After Final
  - ☐ Affidavits/declaration(s)
- ☐ Extension of Time Request
- ☐ Express Abandonment Request
- ☑ Information Disclosure Statement
- ☐ Certified Copy of Priority Document(s)
- ☐ Reply to Missing Parts/ Incomplete Application
  - ☐ Reply to Missing Parts under 37 CFR 1.52 or 1.53
- ☐ Drawing(s)
- ☐ Licensing-related Papers
- ☐ Petition
- ☐ Petition to Convert to a Provisional Application
- ☐ Power of Attorney, Revocation Change of Correspondence Address
- ☐ Terminal Disclaimer
- ☐ Request for Refund
- ☐ CD, Number of CD(s) _____
  - ☐ Landscape Table on CD
- ☐ After Allowance Communication to TC
- ☐ Appeal Communication to Board of Appeals and Interferences
- ☐ Appeal Communication to TC **(Appeal Notice, Brief, Reply Brief)**
- ☐ Proprietary Information
- ☐ Status Letter
- ☑ Other Enclosure(s) (please identify below):

Remarks

1. PTO Form 1449; and
2. Copy of Canadian Office Action

SIGNATURE OF APPLICANT, ATTORNEY, OR AGENT

Firm Name	Kaliko & Yeager		
Signature			
Printed name	Scott H. Kaliko, Esq.		
Date	October 5, 2006	Reg. No.	45,786

CERTIFICATE OF TRANSMISSION/MAILING

I hereby certify that this correspondence is being facsimile transmitted to the USPTO or deposited with the United States Postal Service with sufficient postage as first class mail in an envelope addressed to: Commissioner for Patents, P.O. Box 1450, Alexandria, VA 22313-1450 on the date shown below:

Signature			
Typed or printed name	Scott H. Kaliko, Esq.	Date	October 5, 2006

This collection of information is required by 37 CFR 1.5. The information is required to obtain or retain a benefit by the public which is to file (and by the USPTO to process) an application. Confidentiality is governed by 35 U.S.C. 122 and 37 CFR 1.11 and1.14. This collection is estimated to 2 hours to complete, including gathering, preparing, and submitting the completed application form to the USPTO. Time will vary depending upon the individual case. Any comments on the amount of time you require to complete this form and/or suggestions for reducing this burden, should be sent to the Chief Information Officer, U.S. Patent and Trademark Office, U.S. Department of Commerce, P.O. Box 1450, Alexandria, VA 22313-1450. DO NOT SEND FEES OR COMPLETED FORMS TO THIS ADDRESS. **SEND TO: Commissioner for Patents, P.O. Box 1450, Alexandria, VA 22313-1450.**

If you need assistance in completing the form, call 1-800-PTO-9199 and select option 2.

RECEIVED
CENTRAL FAX CENTER
OCT 0 5 2006

PATENT
MES/002 CON

IN THE UNITED STATES PATENT AND TRADEMARK OFFICE

Applicant	:	Michael E. Shanahan
Serial No.	:	10/600,975 Confirmation No.: 7158
Filed	:	June 20, 2003
Title	:	METHODS AND APPARATUSES FOR PROGRAMMING USER-DEFINED INFORMATION INTO ELECTRONIC DEVICES.
Examiner	:	Temica M. Beamer
Group Art Unit	:	2617

Commissioner for Patents
P.O. Box 1450
Alexandria, VA 22213-1450

INFORMATION DISCLOSURE STATEMENT

Sir:

Pursuant to 37 C.F.R. §§ 1.56, 1.97 and 1.98, applicant hereby makes the documents listed below of record in the above-identified application.

U.S. Patents

Peters	Patent No. 5,577,190	November 19, 1996

RECEIVED
CENTRAL FAX CENTER
OCT 0 5 2006

PTO/SB/08A (07-05)
Approved for use through 07/31/2006. OMB 0651-0031
U.S. Patent and Trademark Office; U.S. DEPARTMENT OF COMMERCE

Under the Paperwork Reduction Act of 1995, no persons are required to respond to a collection of information unless it contains a valid OMB control number.

Substitute for form 1449/PTO

INFORMATION DISCLOSURE STATEMENT BY APPLICANT

(Use as many sheets as necessary)

Sheet 1 of 1

Complete if Known	
Application Number	10/600,975
Filing Date	June 20, 2003
First Named Inventor	Michael E. Shanahan
Art Unit	2617
Examiner Name	Temica M. Beamer
Attorney Docket Number	MES/002 CON

U. S. PATENT DOCUMENTS

Examiner Initials*	Cite No.[1]	Document Number Number-Kind Code[2] (if known)	Publication Date MM-DD-YYYY	Name of Patentee or Applicant of Cited Document	Pages, Columns, Lines, Where Relevant Passages or Relevant Figures Appear
		US- 5,577,190	11-19-1996	Peters	
		US-			
		US-			
		US-			
		US-			
		US-			
		US-			
		US-			
		US-			
		US-			
		US-			
		US-			
		US-			
		US-			
		US-			
		US-			
		US-			
		US-			
		US-			

FOREIGN PATENT DOCUMENTS

Examiner Initials*	Cite No.[1]	Foreign Patent Document Country Code[3] Number[4] Kind Code[5] (if known)	Publication Date MM-DD-YYYY	Name of Patentee or Applicant of Cited Document	Pages, Columns, Lines, Where Relevant Passages Or Relevant Figures Appear	T[6]
		CA Office Action copy Included	9-19-2006			

Examiner Signature		Date Considered	

*EXAMINER: Initial if reference considered, whether or not citation is in conformance with MPEP 609. Draw line through citation if not in conformance and not considered. Include copy of this form with next communication to applicant. [1] Applicant's unique citation designation number (optional). [2] See Kinds Codes of USPTO Patent Documents at www.uspto.gov or MPEP 901.04. [3] Enter Office that issued the document, by the two-letter code (WIPO Standard ST.3). [4] For Japanese patent documents, the indication of the year of the reign of the Emperor must precede the serial number of the patent document. [5] Kind of document by the appropriate symbols as indicated on the document under WIPO Standard ST.16 if possible. [6] Applicant is to place a check mark here if English language Translation is attached.

This collection of information is required by 37 CFR 1.97 and 1.98. The information is required to obtain or retain a benefit by the public which is to file (and by the USPTO to process) an application. Confidentiality is governed by 35 U.S.C. 122 and 37 CFR 1.14. This collection is estimated to take 2 hours to complete, including gathering, preparing, and submitting the completed application form to the USPTO. Time will vary depending upon the individual case. Any comments on the amount of time you require to complete this form and/or suggestions for reducing this burden, should be sent to the Chief Information Officer, U.S. Patent and Trademark Office, P.O. Box 1450, Alexandria, VA 22313-1450. DO NOT SEND FEES OR COMPLETED FORMS TO THIS ADDRESS. **SEND TO: Commissioner for Patents, P.O. Box 1450, Alexandria, VA 22313-1450.**

If you need assistance in completing the form, call 1-800-PTO-9199 (1-800-786-9199) and select option 2.

PATENT
MES/002 CON

Foreign Office Action

Canadian Office Action dated September 19, 2006 copy included

It is respectfully requested the Examiner fully consider these and any associated documents during the examination of this application, make them of record, and indicate his or her consideration of the documents by initialing the enclosed Citation List adjacent the citation of each document, and print them on any patent that may issue on this application. It is requested that a copy of the initialed Citation form be returned to applicant's undersigned Attorney. Citing of references herein shall not be deemed an admission that such references are prior art. Copies of the cited references are transmitted herewith.

Pursuant to 37 C.F.R. § 1.97 (e)(1) each item of information contained in this Information Disclosure Statement was first cited in a communication from a foreign patent office in a counterpart foreign application not more than three months prior to the filing of this statement. Accordingly, it is believed no fees are due in connection with the filing of this Information Disclosure Statement.

PATENT
MES/002 CON

Respectfully submitted,

10/5/06
Date

Scott H. Kaliko
Attorney for Applicant
Registration No. 45,786
KALIKO & YEAGER
500 North Franklin Turnpike
Ramsey, NJ 07446
Direct: 201-831-0575
Fax: 201-831-0519

Office de la propriété intellectuelle du Canada
Un organisme d'Industrie Canada
www.opic.gc.ca

Canadian Intellectual Property Office
An Agency of Industry Canada
www.cipo.gc.ca

RECEIVED
2006 SEP 21 A 8:24

September 19, 2006

SMART & BIGGAR
P.O. Box 2999
Station D
OTTAWA Ontario
K1P 5Y6

55 METCALFE ST.

Application No.	:	**2,436,872**
Owner	:	TWENTY YEAR INNOVATIONS, INC.
Title	:	**METHODS AND APPARATUSES FOR PROGRAMMING USER-DEFINED INFORMATION INTO ELECTRONIC DEVICES**
Classification	:	H04M 1/247 (2006.01)
Your File No.	:	~~50320-T~~ 51170-1(6)
Examiner	:	S.Chhim

YOU ARE HEREBY NOTIFIED OF :

- A REQUISITION BY THE EXAMINER IN ACCORDANCE WITH SUBSECTION 30(2) OF THE *PATENT RULES*;
- A REQUISITION BY THE EXAMINER IN ACCORDANCE WITH SECTION 29 OF THE *PATENT RULES*.

IN ORDER TO AVOID **MULTIPLE ABANDONMENTS** UNDER PARAGRAPH 73(1)(A) OF THE *PATENT ACT*, A WRITTEN REPLY **TO EACH REQUISITION** MUST BE RECEIVED WITHIN 6 MONTHS AFTER THE ABOVE DATE.

This application has been examined taking into account applicant's correspondence received in this office on January 22, 2004.

The number of claims in this application is 171.

The examiner has identified the following defects in the application:

The search of the prior art has revealed the following:

Reference Applied:

United States Patent 5,577,190	November 19, 1996	G0F-3/23	Peters

Peters discloses a media editing system.

Claims 10, 51, 94 and 130 do not comply with section 28.3 of the *Patent Act*. The subject matter of these claims would have been obvious on the claim date to a person skilled in the art or science to which they pertain having regard to Peters.

Claims 10, 51, 94 and 130 are obvious, because Peters teaches a media editing system for editing source material, which comprises a digitizing apparatus for receiving and digitizing video and audio source material, the video source material including a sequence of images, each spanning both the horizontal and vertical display axes of the video source material; computing apparatus including compression apparatus responsive to the digitizing apparatus, the compression apparatus being for compressing the images from the video source material; mass storage responsive to the computing apparatus to receive the compressed video source material, the audio source material, and the information regarding each adjustment; and output apparatus communicating with the computing apparatus for displaying the manipulated source material. Features of claims 10, 51, 94 and 130 are similar to those defined in the specifications of Peters's reference.

Therefore, claims 10, 51, 94 and 130 do not comply with Section 28.3 of the Patent Act.

In view of the foregoing defects, the applicant is requisitioned, under subsection 30(2) of the *Patent Rules*, to amend the application in order to comply with the *Patent Act* and the *Patent Rules* or to provide arguments as to why the application does comply.

Section 29 of the Patent Rules requisition

Under section 29 of the *Patent Rules*, the applicant is requisitioned to provide:

- identification of any prior art cited in respect of the European Patent Office application describing the same invention on behalf of the applicant or on behalf of any other person claiming under an inventor named in the present application, and the patent number, if granted, subsequent to the International Search Report under paragraph 29(1)(a) of the *Patent Rules*.

To satisfy this requisition, applicant should provide all the preceding information or documents, or provide in accordance with subsection 29(3) of the *Patent Rules* a statement of reasons why any information or document is not available or known.

S.Chhim
Patent Examiner
(819) 997-2238

KALIKO & YEAGER
ATTORNEYS AT LAW
A LIMITED LIABILITY CORPORATION

500 North Franklin Turnpike, Ramsey, NJ 07446
(201) 831-0575 Main Tel
(201) 831-0519 Main Fax

RECEIVED
CENTRAL FAX CENTER
SEP 21 2006

FACSIMILE TRANSMITTAL SHEET

TO: Commissioner for Patents	FROM: Scott H. Kaliko, Esq. SENDER'S FAX NUMBER: 201-831-0519 SENDER'S TELEPHONE NUMBER: 201-831-0575
COMPANY: United States Patent & Trademark Office	DATE: SEPTEMBER 21, 2006
RECIPIENT'S FAX NUMBER: 571-273-8300	TOTAL NO. OF PAGES INCLUDING COVER: 54
RECIPIENT'S TELEPHONE NUMBER:	CLIENT / MATTER:
RE: Application No. 10/600,975	YOUR REFERENCE NUMBER: MES/002 CON

☐ URGENT ☐ FOR REVIEW ☐ PLEASE COMMENT ☐ PLEASE REPLY ☐ PLEASE RECYCLE

NOTES/COMMENTS:

Please confirm receipt of this fax and the below-identified attached parts.

1. Transmittal Form/Certificate of Transmission; and
2. Information Disclosure Statement; and
3. PTO Form 1449; and
4. Copies of References.

CONFIDENTIALITY NOTICE

The information contained in this facsimile message is privileged and confidential and is intended only for the use of the individual(s) and/or entity(ies) named above. If you are not the intended recipient, you are hereby notified that any unauthorized disclosure, copying, distribution or taking of any action in reliance on the contents of the information contained herein is strictly prohibited and review by any individual other than the intended recipient shall not constitute a waiver of the attorney-client privilege. If you have received this transmission in error, please immediately notify us by telephone. Thank you.

RECEIVED
CENTRAL FAX CENTER

SEP 21 2006

PTO/SB/21 (09-04)
Approved for use through 07/31/2006. OMB 0651-0031
U.S. Patent and Trademark Office; U.S. DEPARTMENT OF COMMERCE
Under the Paperwork Reduction Act of 1995, no persons are required to respond to a collection of information unless it displays a valid OMB control number.

TRANSMITTAL FORM

(to be used for all correspondence after initial filing)

Application Number	10/600,975
Filing Date	June 20, 2003
First Named Inventor	Michael E. Shanahan
Art Unit	2817
Examiner Name	Temica M. Beamer
Attorney Docket Number	MES/002 CON

Total Number of Pages in This Submission: 53

ENCLOSURES *(Check all that apply)*

- ☐ Fee Transmittal Form
  - ☐ Fee Attached
- ☐ Amendment/Reply
  - ☐ After Final
  - ☐ Affidavits/declaration(s)
- ☐ Extension of Time Request
- ☐ Express Abandonment Request
- ☑ Information Disclosure Statement
- ☐ Certified Copy of Priority Document(s)
- ☐ Reply to Missing Parts/ Incomplete Application
  - ☐ Reply to Missing Parts under 37 CFR 1.52 or 1.53
- ☐ Drawing(s)
- ☐ Licensing-related Papers
- ☐ Petition
- ☐ Petition to Convert to a Provisional Application
- ☐ Power of Attorney, Revocation Change of Correspondence Address
- ☐ Terminal Disclaimer
- ☐ Request for Refund
- ☐ CD, Number of CD(s) _____
  - ☐ Landscape Table on CD
- ☐ After Allowance Communication to TC
- ☐ Appeal Communication to Board of Appeals and Interferences
- ☐ Appeal Communication to TC **(Appeal Notice, Brief, Reply Brief)**
- ☐ Proprietary Information
- ☐ Status Letter
- ☑ Other Enclosure(s) (please identify below):

Remarks

1. PTO Form 1449; and
2. Copies of References.

SIGNATURE OF APPLICANT, ATTORNEY, OR AGENT

Firm Name	Kaliko & Yeager		
Signature			
Printed name	Scott H. Kaliko, Esq.		
Date	September 21, 2006	Reg. No.	45,786

CERTIFICATE OF TRANSMISSION/MAILING

I hereby certify that this correspondence is being facsimile transmitted to the USPTO or deposited with the United States Postal Service with sufficient postage as first class mail in an envelope addressed to: Commissioner for Patents, P.O. Box 1450, Alexandria, VA 22313-1450 on the date shown below:

Signature			
Typed or printed name	Scott H. Kaliko, Esq.	Date	September 21, 2006

This collection of information is required by 37 CFR 1.5. The information is required to obtain or retain a benefit by the public which is to file (and by the USPTO to process) an application. Confidentiality is governed by 35 U.S.C. 122 and 37 CFR 1.11 and1.14. This collection is estimated to 2 hours to complete, including gathering, preparing, and submitting the completed application form to the USPTO. Time will vary depending upon the individual case. Any comments on the amount of time you require to complete this form and/or suggestions for reducing this burden, should be sent to the Chief Information Officer, U.S. Patent and Trademark Office, U.S. Department of Commerce, P.O. Box 1450, Alexandria, VA 22313-1450. DO NOT SEND FEES OR COMPLETED FORMS TO THIS ADDRESS. **SEND TO: Commissioner for Patents, P.O. Box 1450, Alexandria, VA 22313-1450.**

If you need assistance in completing the form, call 1-800-PTO-9199 and select option 2.

RECEIVED
CENTRAL FAX CENTER

SEP 21 2006

PATENT
MES/002 CON

IN THE UNITED STATES PATENT AND TRADEMARK OFFICE

Applicant	:	Michael E. Shanahan
Serial No.	:	10/600,975 Confirmation No.: 7158
Filed	:	June 20, 2003
Title	:	METHODS AND APPARATUSES FOR PROGRAMMING USER-DEFINED INFORMATION INTO ELECTRONIC DEVICES.
Examiner	:	Temica M. Beamer
Group Art Unit	:	2617

Commissioner for Patents
P.O. Box 1450
Alexandria, VA 22213-1450

INFORMATION DISCLOSURE STATEMENT

Sir:

Pursuant to 37 C.F.R. §§ 1.56, 1.97 and 1.98, applicant hereby makes the documents listed below of record in the above-identified application.

U.S. Patents

Farris, et al.	Patent No. 6,151,491	November 21, 2000

It is respectfully requested the Examiner fully consider these and any associated documents during the examination of this application, make them of record, and indicate his or her consideration of the documents by initialing the enclosed Citation List adjacent the citation of each document, and print them on any patent that may issue on this application. It is requested that a copy of the initialed Citation form be returned to applicant's undersigned Attorney. Citing of references herein shall not be deemed an admission that such references are prior art. Copies of the cited references are transmitted herewith.

Pursuant to 37 C.F.R. § 1.97 (e)(2) no item contained in this information disclosure statement was cited in a communication from a foreign patent office in a counterpart foreign application or, to the knowledge of the person signing the certification after making reasonable inquiry, was known to any individual designated in 37 C.F.R. § 1.56(c) more than three months prior to the filing of this statement. Accordingly, it is believed no fees are due in connection with the filing of this Information Disclosure Statement.

PATENT
MES/002 CON

Respectfully submitted,

9/21/06
Date

Scott H. Kaliko
Attorney for Applicant
Registration No. 45,786
KALIKO & YEAGER
500 North Franklin Turnpike
Ramsey, NJ 07446
Direct: 201-831-0575
Fax: 201-831-0519

RECEIVED
CENTRAL FAX CENTER

SEP 21 2006

PTO/SB/08A (07-05)
Approved for use through 07/31/2006. OMB 0651-0031
U.S. Patent and Trademark Office; U.S. DEPARTMENT OF COMMERCE
Under the Paperwork Reduction Act of 1995, no persons are required to respond to a collection of information unless it contains a valid OMB control number.

Substitute for form 1449/PTO

INFORMATION DISCLOSURE STATEMENT BY APPLICANT

(Use as many sheets as necessary)

Sheet 1 of 1

Complete if Known	
Application Number	10/600,975
Filing Date	June 20, 2003
First Named Inventor	Michael E. Shanahan
Art Unit	2617
Examiner Name	Temica M. Beamer
Attorney Docket Number	MES/002 CON

U. S. PATENT DOCUMENTS

Examiner Initials*	Cite No.[1]	Document Number Number-Kind Code[2] (if known)	Publication Date MM-DD-YYYY	Name of Patentee or Applicant of Cited Document	Pages, Columns, Lines, Where Relevant Passages or Relevant Figures Appear
		US- 6,151,491	11-21-2000	Farris et al.	
		US-			
		US-			
		US-			
		US-			
		US-			
		US-			
		US-			
		US-			
		US-			
		US-			
		US-			
		US-			
		US-			
		US-			
		US-			
		US-			
		US-			
		US-			

FOREIGN PATENT DOCUMENTS

Examiner Initials*	Cite No.[1]	Foreign Patent Document Country Code[3]-Number[4]-Kind Code[5] (if known)	Publication Date MM-DD-YYYY	Name of Patentee or Applicant of Cited Document	Pages, Columns, Lines, Where Relevant Passages Or Relevant Figures Appear	T[6]

Examiner Signature		Date Considered	

*EXAMINER: Initial if reference considered, whether or not citation is in conformance with MPEP 609. Draw line through citation if not in conformance and not considered. Include copy of this form with next communication to applicant. [1] Applicant's unique citation designation number (optional). [2] See Kinds Codes of USPTO Patent Documents at www.uspto.gov or MPEP 901.04. [3] Enter Office that issued the document, by the two-letter code (WIPO Standard ST.3). [4] For Japanese patent documents, the indication of the year of the reign of the Emperor must precede the serial number of the patent document. [5] Kind of document by the appropriate symbols as indicated on the document under WIPO Standard ST.16 if possible. [6] Applicant is to place a check mark here if English language Translation is attached.

This collection of information is required by 37 CFR 1.97 and 1.98. The information is required to obtain or retain a benefit by the public which is to file (and by the USPTO to process) an application. Confidentiality is governed by 35 U.S.C. 122 and 37 CFR 1.14. This collection is estimated to take 2 hours to complete, including gathering, preparing, and submitting the completed application form to the USPTO. Time will vary depending upon the individual case. Any comments on the amount of time you require to complete this form and/or suggestions for reducing this burden, should be sent to the Chief Information Officer, U.S. Patent and Trademark Office, P.O. Box 1450, Alexandria, VA 22313-1450. DO NOT SEND FEES OR COMPLETED FORMS TO THIS ADDRESS. **SEND TO: Commissioner for Patents, P.O. Box 1450, Alexandria, VA 22313-1450.**

If you need assistance in completing the form, call 1-800-PTO-9199 (1-800-786-9199) and select option 2.

RECEIVED
CENTRAL FAX CENTER
AUG 15 2006

KALIKO & YEAGER
ATTORNEYS AT LAW
A LIMITED LIABILITY CORPORATION

500 North Franklin Turnpike, Ramsey, NJ 07446
(201) 831-0575 Main Tel
(201) 831-0519 Main Fax

FACSIMILE TRANSMITTAL SHEET

TO: Commissioner for Patents	FROM: Scott H. Kaliko, Esq. SENDER'S FAX NUMBER: 201-831-0519 SENDER'S TELEPHONE NUMBER: 201-831-0575
COMPANY: United States Patent & Trademark Office	DATE: AUGUST 15, 2006
RECIPIENT'S FAX NUMBER: 571-273-8300	TOTAL NO. OF PAGES INCLUDING COVER: 54
RECIPIENT'S TELEPHONE NUMBER:	CLIENT / MATTER:
RE: Application No. 10/600,975	YOUR REFERENCE NUMBER: MES/002 CON

☐ URGENT ☐ FOR REVIEW ☐ PLEASE COMMENT ☐ PLEASE REPLY ☐ PLEASE RECYCLE

NOTES/COMMENTS:

Please confirm receipt of this fax and the below-identified attached parts.

1. Transmittal Form/Certificate of Transmission; and
2. Fee Transmittal (2 Copies); and
3. Credit Card Payment Form; and
4. Information Disclosure Statement; and
5. PTO Form 1449; and
6. Copies of References.

CONFIDENTIALITY NOTICE

The information contained in this facsimile message is privileged and confidential and is intended only for the use of the individual(s) and/or entity(ies) named above. If you are not the intended recipient, you are hereby notified that any unauthorized disclosure, copying, distribution or taking of any action in reliance on the contents of the information contained herein is strictly prohibited and review by any individual other than the intended recipient shall not constitute a waiver of the attorney-client privilege. If you have received this transmission in error, please immediately notify us by telephone. Thank you.

PAGE 1/53 * RCVD AT 8/15/2006 4:19:08 PM [Eastern Daylight Time] * SVR:USPTO-EFXRF-6/44 * DNIS:2738300 * CSID:2018310519 * DURATION (mm-ss):17-12

PTO/SB/21 (09-04)
Approved for use through 07/31/2006. OMB 0651-0031
U.S. Patent and Trademark Office: U.S. DEPARTMENT OF COMMERCE
Under the Paperwork Reduction Act of 1995, no persons are required to respond to a collection of information unless it displays a valid OMB control number.

TRANSMITTAL FORM

(to be used for all correspondence after initial filing)

Total Number of Pages in This Submission: 53

Application Number	10/600,975
Filing Date	June 20, 2003
First Named Inventor	Michael E. Shanahan
Art Unit	2617
Examiner Name	Temica M. Beamer
Attorney Docket Number	MES/002 CON

RECEIVED
CENTRAL FAX CENTER
AUG 15 2006

ENCLOSURES *(Check all that apply)*

- [x] Fee Transmittal Form
- [x] Fee Attached
- [ ] Amendment/Reply
  - [ ] After Final
  - [ ] Affidavits/declaration(s)
- [ ] Extension of Time Request
- [ ] Express Abandonment Request
- [x] Information Disclosure Statement
- [ ] Certified Copy of Priority Document(s)
- [ ] Reply to Missing Parts/ Incomplete Application
  - [ ] Reply to Missing Parts under 37 CFR 1.52 or 1.53
- [ ] Drawing(s)
- [ ] Licensing-related Papers
- [ ] Petition
- [ ] Petition to Convert to a Provisional Application
- [ ] Power of Attorney, Revocation Change of Correspondence Address
- [ ] Terminal Disclaimer
- [ ] Request for Refund
- [ ] CD, Number of CD(s) _____
  - [ ] Landscape Table on CD
- [ ] After Allowance Communication to TC
- [ ] Appeal Communication to Board of Appeals and Interferences
- [ ] Appeal Communication to TC (Appeal Notice, Brief, Reply Brief)
- [ ] Proprietary Information
- [ ] Status Letter
- [x] Other Enclosure(s) (please identify below):

Remarks

1. Supplemental IDS; and
2. PTO Form 1449; and
3. Credit Card Payment Form; and
4. Copies of References.

SIGNATURE OF APPLICANT, ATTORNEY, OR AGENT

Firm Name	Kaliko & Yeager, L.L.C		
Signature			
Printed name	Scott H. Kaliko, Esq.		
Date	August 15, 2006	Reg. No.	45,786

CERTIFICATE OF TRANSMISSION/MAILING

I hereby certify that this correspondence is being facsimile transmitted to the USPTO or deposited with the United States Postal Service with sufficient postage as first class mail in an envelope addressed to: Commissioner for Patents, P.O. Box 1450, Alexandria, VA 22313-1450 on the date shown below:

Signature			
Typed or printed name	Scott H. Kaliko, Esq.	Date	August 15, 2006

This collection of information is required by 37 CFR 1.5. The information is required to obtain or retain a benefit by the public which is to file (and by the USPTO to process) an application. Confidentiality is governed by 35 U.S.C. 122 and 37 CFR 1.11 and1.14. This collection is estimated to 2 hours to complete, including gathering, preparing, and submitting the completed application form to the USPTO. Time will vary depending upon the individual case. Any comments on the amount of time you require to complete this form and/or suggestions for reducing this burden, should be sent to the Chief Information Officer, U.S. Patent and Trademark Office, U.S. Department of Commerce, P.O. Box 1450, Alexandria, VA 22313-1450. DO NOT SEND FEES OR COMPLETED FORMS TO THIS ADDRESS. **SEND TO: Commissioner for Patents, P.O. Box 1450, Alexandria, VA 22313-1450.**

If you need assistance in completing the form, call 1-800-PTO-9199 and select option 2.

PTO/SB/17 (01-06)
Approved for use through 07/31/2006. OMB 0651-0032
U.S. Patent and Trademark Office: U.S. DEPARTMENT OF COMMERCE
Under the Paperwork Reduction Act of 1995 no persons are required to respond to a collection of information unless it displays a valid OMB control number.

RECEIVED
CENTRAL FAX CENTER
AUG 15 2006

Fees pursuant to the Consolidated Appropriations Act, 2005 (H.R. 4818).

FEE TRANSMITTAL
For FY 2006

☑ Applicant claims small entity status. See 37 CFR 1.27

TOTAL AMOUNT OF PAYMENT	($)	180.00

Complete if Known	
Application Number	10/600,975
Filing Date	June 20, 2003
First Named Inventor	Michael E. Shanahan
Examiner Name	Temica M. Beamer
Art Unit	2617
Attorney Docket No.	MES/002 CON

METHOD OF PAYMENT (check all that apply)

☐ Check ☑ Credit Card ☐ Money Order ☐ None ☐ Other (please identify): _____

☐ Deposit Account Deposit Account Number: _____ Deposit Account Name: _____

For the above-identified deposit account, the Director is hereby authorized to: (check all that apply)

☑ Charge fee(s) indicated below ☐ Charge fee(s) indicated below, except for the filing fee

☑ Charge any additional fee(s) or underpayments of fee(s) under 37 CFR 1.16 and 1.17 ☐ Credit any overpayments

WARNING: Information on this form may become public. Credit card information should not be included on this form. Provide credit card information and authorization on PTO-2038.

FEE CALCULATION (All the fees below are due upon filing or may be subject to a surcharge.)

1. BASIC FILING, SEARCH, AND EXAMINATION FEES

Application Type	FILING FEES Fee ($)	FILING FEES Small Entity Fee ($)	SEARCH FEES Fee ($)	SEARCH FEES Small Entity Fee ($)	EXAMINATION FEES Fee ($)	EXAMINATION FEES Small Entity Fee ($)	Fees Paid ($)
Utility	300	150	500	250	200	100	
Design	200	100	100	50	130	65	
Plant	200	100	300	150	160	80	
Reissue	300	150	500	250	600	300	
Provisional	200	100	0	0	0	0	

2. EXCESS CLAIM FEES

Fee Description	Fee ($)	Small Entity Fee ($)
Each claim over 20 (including Reissues)	50	25
Each independent claim over 3 (including Reissues)	200	100
Multiple dependent claims	360	180

Total Claims _____ - 20 or HP = _____ x _____ = _____ Fee Paid ($) _____

HP = highest number of total claims paid for, if greater than 20.

Indep. Claims _____ - 3 or HP = _____ x _____ = _____ Fee Paid ($) _____

HP = highest number of independent claims paid for, if greater than 3.

Multiple Dependent Claims Fee ($) _____ Fee Paid ($) _____

3. APPLICATION SIZE FEE

If the specification and drawings exceed 100 sheets of paper (excluding electronically filed sequence or computer listings under 37 CFR 1.52(e)), the application size fee due is $250 ($125 for small entity) for each additional 50 sheets or fraction thereof. See 35 U.S.C. 41(a)(1)(G) and 37 CFR 1.16(s).

Total Sheets _____ - 100 = _____ Extra Sheets / 50 = _____ Number of each additional 50 or fraction thereof (round up to a whole number) x _____ Fee ($) = _____ Fee Paid ($)

4. OTHER FEE(S)

Non-English Specification, $130 fee (no small entity discount) Fees Paid ($) _____

Other (e.g., late filing surcharge): IDS fee 37 CFR 1.17 (P) 180.00

SUBMITTED BY

Signature		Registration No. (Attorney/Agent) 45,786	Telephone 201-831-0575
Name (Print/Type)	Scott H. Kaliko, Esq.		Date August 15, 2006

This collection of information is required by 37 CFR 1.136. The information is required to obtain or retain a benefit by the public which is to file (and by the USPTO to process) an application. Confidentiality is governed by 35 U.S.C. 122 and 37 CFR 1.14. This collection is estimated to take 30 minutes to complete, including gathering, preparing, and submitting the completed application form to the USPTO. Time will vary depending upon the individual case. Any comments on the amount of time you require to complete this form and/or suggestions for reducing this burden, should be sent to the Chief Information Officer, U.S. Patent and Trademark Office, U.S. Department of Commerce, P.O. Box 1450, Alexandria, VA 22313-1450. DO NOT SEND FEES OR COMPLETED FORMS TO THIS ADDRESS. **SEND TO: Commissioner for Patents, P.O. Box 1450, Alexandria, VA 22313-1450.**

If you need assistance in completing the form, call 1-800-PTO-9199 and select option 2.

PTO/SB/17 (01-06)
Approved for use through 07/31/2006. OMB 0651-0032
U.S. Patent and Trademark Office: U.S. DEPARTMENT OF COMMERCE
Under the Paperwork Reduction Act of 1995 no persons are required to respond to a collection of information unless it displays a valid OMB control number

RECEIVED
CENTRAL FAX CENTER
AUG 15 2006

Fees pursuant to the Consolidated Appropriations Act, 2005 (H.R. 4818).

FEE TRANSMITTAL
For FY 2006

☑ Applicant claims small entity status. See 37 CFR 1.27

TOTAL AMOUNT OF PAYMENT ($) 180.00

Complete if Known	
Application Number	10/600,975
Filing Date	June 20, 2003
First Named Inventor	Michael E. Shanahan
Examiner Name	Temica M. Beamer
Art Unit	2617
Attorney Docket No.	MES/002 CON

METHOD OF PAYMENT (check all that apply)

☐ Check ☑ Credit Card ☐ Money Order ☐ None ☐ Other (please identify): _____

☐ Deposit Account Deposit Account Number: _____ Deposit Account Name: _____

For the above-identified deposit account, the Director is hereby authorized to: (check all that apply)

☑ Charge fee(s) indicated below ☐ Charge fee(s) indicated below, except for the filing fee

☑ Charge any additional fee(s) or underpayments of fee(s) under 37 CFR 1.16 and 1.17 ☐ Credit any overpayments

WARNING: Information on this form may become public. Credit card information should not be included on this form. Provide credit card information and authorization on PTO-2038.

FEE CALCULATION (All the fees below are due upon filing or may be subject to a surcharge.)

1. BASIC FILING, SEARCH, AND EXAMINATION FEES

	FILING FEES		SEARCH FEES		EXAMINATION FEES		
		Small Entity		Small Entity		Small Entity	
Application Type	Fee ($)	Fee ($)	Fee ($)	Fee ($)	Fee ($)	Fee ($)	Fees Paid ($)
Utility	300	150	500	250	200	100	
Design	200	100	100	50	130	65	
Plant	200	100	300	150	160	80	
Reissue	300	150	500	250	600	300	
Provisional	200	100	0	0	0	0	

2. EXCESS CLAIM FEES

Fee Description	Fee ($)	Small Entity Fee ($)
Each claim over 20 (including Reissues)	50	25
Each independent claim over 3 (including Reissues)	200	100
Multiple dependent claims	360	180

Total Claims	Extra Claims	Fee ($)	Fee Paid ($)
_____ - 20 or HP =	_____	x _____	= _____

HP = highest number of total claims paid for, if greater than 20.

Indep. Claims	Extra Claims	Fee ($)	Fee Paid ($)
_____ - 3 or HP =	_____	x _____	= _____

HP = highest number of independent claims paid for, if greater than 3.

Multiple Dependent Claims	
Fee ($)	Fee Paid ($)
_____	_____

3. APPLICATION SIZE FEE

If the specification and drawings exceed 100 sheets of paper (excluding electronically filed sequence or computer listings under 37 CFR 1.52(e)), the application size fee due is $250 ($125 for small entity) for each additional 50 sheets or fraction thereof. See 35 U.S.C. 41(a)(1)(G) and 37 CFR 1.16(s).

Total Sheets	Extra Sheets	Number of each additional 50 or fraction thereof	Fee ($)	Fee Paid ($)
_____ - 100 =	_____	/ 50 = _____ (round up to a whole number)	x _____	= _____

4. OTHER FEE(S)

	Fees Paid ($)
Non-English Specification, $130 fee (no small entity discount)	
Other (e.g., late filing surcharge): IDS fee 37 CFR 1.17 (P)	180.00

SUBMITTED BY			
Signature		Registration No. (Attorney/Agent) 45,788	Telephone 201-831-0575
Name (Print/Type)	Scott H. Kaliko, Esq.		Date August 15, 2006

This collection of information is required by 37 CFR 1.136. The information is required to obtain or retain a benefit by the public which is to file (and by the USPTO to process) an application. Confidentiality is governed by 35 U.S.C. 122 and 37 CFR 1.14. This collection is estimated to take 30 minutes to complete, including gathering, preparing, and submitting the completed application form to the USPTO. Time will vary depending upon the individual case. Any comments on the amount of time you require to complete this form and/or suggestions for reducing this burden, should be sent to the Chief Information Officer, U.S. Patent and Trademark Office, U.S. Department of Commerce, P.O. Box 1450, Alexandria, VA 22313-1450. DO NOT SEND FEES OR COMPLETED FORMS TO THIS ADDRESS. **SEND TO: Commissioner for Patents, P.O. Box 1450, Alexandria, VA 22313-1450.**

If you need assistance in completing the form, call 1-800-PTO-9199 and select option 2.

RECEIVED
CENTRAL FAX CENTER
AUG 15 2006

PATENT
MES/002 CON

IN THE UNITED STATES PATENT AND TRADEMARK OFFICE

Applicant	:	Michael E. Shanahan
Serial No.	:	10/600,975 Confirmation No.: 7158
Filed	:	June 20, 2003
Title	:	METHODS AND APPARATUSES FOR PROGRAMMING USER-DEFINED INFORMATION INTO ELECTRONIC DEVICES.
Examiner	:	Temica M. Beamer
Group Art Unit	:	2617

Commissioner for Patents
P.O. Box 1450
Alexandria, VA 22213-1450

INFORMATION DISCLOSURE STATEMENT

Sir:

Pursuant to 37 C.F.R. §§ 1.56, 1.97 and 1.98, applicant hereby makes the documents listed below of record in the above-identified application.

U.S. Patents

Abraham et al.	Patent No. 6,829,618	December, 2004
Galensky et al.	Patent No. 6,845,398	January, 2005

PAGE 6/53 * RCVD AT 8/15/2006 4:19:08 PM [Eastern Daylight Time] * SVR:USPTO-EFXRF-6/44 * DNIS:2738300 * CSID:2018310519 * DURATION (mm-ss):17-12

PATENT
MES/002 CON

It is respectfully requested the Examiner fully consider these and any associated documents during the examination of this application, make them of record, and indicate his or her consideration of the documents by initialing the enclosed Citation List adjacent the citation of each document, and print them on any patent that may issue on this application. It is requested that a copy of the initialed Citation form be returned to applicant's undersigned Attorney. Citing of references herein shall not be deemed an admission that such references are prior art. Copies of the cited references are transmitted herewith.

Included is a USPTO Credit Card payment form which authorizes charges for $180.00 in payment of IDS fee pursuant to 37 C.F.R. § 1.17 (p) and § 1.97(c)(2).

Respectfully submitted,

8/15/06
Date

Scott H. Kaliko
Attorney for Applicant
Registration No. 45,786
KALIKO & YEAGER, L.L.C.
500 North Franklin Turnpike
Ramsey, NJ 07446
Direct: 201-831-0575
Fax: 201-831-0519

PTO/SB/08A (07-05)
Approved for use through 07/31/2006. OMB 0651-0031
U.S. Patent and Trademark Office: U.S. DEPARTMENT OF COMMERCE
Under the Paperwork Reduction Act of 1995, no persons are required to respond to a collection of information unless it contains a valid OMB control number.

Substitute for form 1449/PTO

INFORMATION DISCLOSURE STATEMENT BY APPLICANT

(Use as many sheets as necessary)

Sheet 1 of 1

Complete if Known	
Application Number	10/600,975
Filing Date	June 20, 2003
First Named Inventor	Michael E. Shanahan
Art Unit	2617
Examiner Name	Temica M. Beamer
Attorney Docket Number	MES/002 CON

RECEIVED
CENTRAL FAX CENTER
AUG 15 2006

U. S. PATENT DOCUMENTS

Examiner Initials*	Cite No.[1]	Document Number Number-Kind Code[2] (if known)	Publication Date MM-DD-YYYY	Name of Patentee or Applicant of Cited Document	Pages, Columns, Lines, Where Relevant Passages or Relevant Figures Appear
		US- 6,845,398	01-18-2005	Galensky et al.	
		US- 6,829,618	12-07-2004	Abraham et al.	
		US-			
		US-			
		US-			
		US-			
		US-			
		US-			
		US-			
		US-			
		US-			
		US-			
		US-			
		US-			
		US-			
		US-			
		US-			
		US-			
		US-			

FOREIGN PATENT DOCUMENTS

Examiner Initials*	Cite No.[1]	Foreign Patent Document Country Code[3]-Number[4]-Kind Code[5] (if known)	Publication Date MM-DD-YYYY	Name of Patentee or Applicant of Cited Document	Pages, Columns, Lines, Where Relevant Passages Or Relevant Figures Appear	T[6]

Examiner Signature		Date Considered	

*EXAMINER: Initial if reference considered, whether or not citation is in conformance with MPEP 609. Draw line through citation if not in conformance and not considered. Include copy of this form with next communication to applicant. [1] Applicant's unique citation designation number (optional). [2] See Kinds Codes of USPTO Patent Documents at www.uspto.gov or MPEP 901.04. [3] Enter Office that issued the document, by the two-letter code (WIPO Standard ST.3). [4] For Japanese patent documents, the indication of the year of the reign of the Emperor must precede the serial number of the patent document. [5] Kind of document by the appropriate symbols as indicated on the document under WIPO Standard ST.16 if possible. [6] Applicant is to place a check mark here if English language Translation is attached.

This collection of information is required by 37 CFR 1.97 and 1.98. The information is required to obtain or retain a benefit by the public which is to file (and by the USPTO to process) an application. Confidentiality is governed by 35 U.S.C. 122 and 37 CFR 1.14. This collection is estimated to take 2 hours to complete, including gathering, preparing, and submitting the completed application form to the USPTO. Time will vary depending upon the individual case. Any comments on the amount of time you require to complete this form and/or suggestions for reducing this burden, should be sent to the Chief Information Officer, U.S. Patent and Trademark Office, P.O. Box 1450, Alexandria, VA 22313-1450. DO NOT SEND FEES OR COMPLETED FORMS TO THIS ADDRESS. SEND TO: **Commissioner for Patents, P.O. Box 1450, Alexandria, VA 22313-1450.**

If you need assistance in completing the form, call 1-800-PTO-9199 (1-800-786-9199) and select option 2.

RECEIVED
CENTRAL FAX CENTER
AUG 15 2006

KALIKO & YEAGER
ATTORNEYS AT LAW
A LIMITED LIABILITY CORPORATION

500 North Franklin Turnpike, Ramsey, NJ 07446
(201) 831-0575 Main Tel
(201) 831-0519 Main Fax

FACSIMILE TRANSMITTAL SHEET

TO: Commissioner for Patents	FROM: Scott H. Kaliko, Esq. SENDER'S FAX NUMBER: 201-831-0519 SENDER'S TELEPHONE NUMBER: 201-831-0575
COMPANY: United States Patent & Trademark Office	DATE: AUGUST 15, 2006
RECIPIENT'S FAX NUMBER: 571-273-8300	TOTAL NO. OF PAGES INCLUDING COVER: 53
RECIPIENT'S TELEPHONE NUMBER:	CLIENT / MATTER:
RE: Application No. 10/600,975	YOUR REFERENCE NUMBER: MTS/002 CON

☐ URGENT ☐ FOR REVIEW ☐ PLEASE COMMENT ☐ PLEASE REPLY ☐ PLEASE RECYCLE

NOTES/COMMENTS:

Please confirm receipt of this fax and the below-identified attached parts.

1. Transmittal Form/Certificate of Transmission; and
2. Fee Transmittal (2 Copies); and
3. Credit Card Payment Form; and
4. Information Disclosure Statement; and
5. PTO Form 1449; and
6. Copies of References.

CONFIDENTIALITY NOTICE

The information contained in this facsimile message is privileged and confidential and is intended only for the use of the individual(s) and/or entity(ies) named above. If you are not the intended recipient, you are hereby notified that any unauthorized disclosure, copying, distribution or taking of any action in reliance on the contents of the information contained herein is strictly prohibited and review by any individual other than the intended recipient shall not constitute a waiver of the attorney-client privilege. If you have received this transmission in error, please immediately notify us by telephone. Thank you.

RECEIVED
CENTRAL FAX CENTER
AUG 15 2006

PTO/SB/21 (09-04)
Approved for use through 07/31/2006. OMB 0651-0031
U.S. Patent and Trademark Office; U.S. DEPARTMENT OF COMMERCE
Under the Paperwork Reduction Act of 1995, no persons are required to respond to a collection of information unless it displays a valid OMB control number.

TRANSMITTAL FORM

(to be used for all correspondence after initial filing)

Total Number of Pages In This Submission: 53

Application Number	10/600,975
Filing Date	June 20, 2003
First Named Inventor	Michael E. Shanahan
Art Unit	2617
Examiner Name	Temica M. Beamer
Attorney Docket Number	MES/002 CON

ENCLOSURES *(Check all that apply)*

- [✔] Fee Transmittal Form
- [✔] Fee Attached
- [ ] Amendment/Reply
- [ ] After Final
- [ ] Affidavits/declaration(s)
- [ ] Extension of Time Request
- [ ] Express Abandonment Request
- [✔] Information Disclosure Statement
- [ ] Certified Copy of Priority Document(s)
- [ ] Reply to Missing Parts/ Incomplete Application
- [ ] Reply to Missing Parts under 37 CFR 1.52 or 1.53
- [ ] Drawing(s)
- [ ] Licensing-related Papers
- [ ] Petition
- [ ] Petition to Convert to a Provisional Application
- [ ] Power of Attorney, Revocation Change of Correspondence Address
- [ ] Terminal Disclaimer
- [ ] Request for Refund
- [ ] CD, Number of CD(s) _____
- [ ] Landscape Table on CD
- [ ] After Allowance Communication to TC
- [ ] Appeal Communication to Board of Appeals and Interferences
- [ ] Appeal Communication to TC (Appeal Notice, Brief, Reply Brief)
- [ ] Proprietary Information
- [ ] Status Letter
- [✔] Other Enclosure(s) (please identify below):

Remarks

1. Supplemental IDS; and
2. PTO Form 1449; and
3. Credit Card Payment Form; and
4. Copies of References.

SIGNATURE OF APPLICANT, ATTORNEY, OR AGENT

Firm Name	Kaliko & Yeager, L.L.C		
Signature			
Printed name	Scott H. Kaliko, Esq.		
Date	August 15, 2006	Reg. No.	45,786

CERTIFICATE OF TRANSMISSION/MAILING

I hereby certify that this correspondence is being facsimile transmitted to the USPTO or deposited with the United States Postal Service with sufficient postage as first class mail in an envelope addressed to: Commissioner for Patents, P.O. Box 1450, Alexandria, VA 22313-1450 on the date shown below:

Signature			
Typed or printed name	Scott H. Kaliko, Esq.	Date	August 15, 2006

This collection of information is required by 37 CFR 1.5. The information is required to obtain or retain a benefit by the public which is to file (and by the USPTO to process) an application. Confidentiality is governed by 35 U.S.C. 122 and 37 CFR 1.11 and1.14. This collection is estimated to 2 hours to complete, including gathering, preparing, and submitting the completed application form to the USPTO. Time will vary depending upon the individual case. Any comments on the amount of time you require to complete this form and/or suggestions for reducing this burden, should be sent to the Chief Information Officer, U.S. Patent and Trademark Office, U.S. Department of Commerce, P.O. Box 1450, Alexandria, VA 22313-1450. DO NOT SEND FEES OR COMPLETED FORMS TO THIS ADDRESS. **SEND TO: Commissioner for Patents, P.O. Box 1450, Alexandria, VA 22313-1450.**

If you need assistance in completing the form, call 1-800-PTO-9199 and select option 2.

RECEIVED
CENTRAL FAX CENTER
AUG 15 2006

PTO/SB/17 (01-06)
Approved for use through 07/31/2006. OMB 0651-0032
U.S. Patent and Trademark Office; U.S. DEPARTMENT OF COMMERCE
Under the Paperwork Reduction Act of 1995 no persons are required to respond to a collection of information unless it displays a valid OMB control number

Fees pursuant to the Consolidated Appropriations Act, 2005 (H.R. 4818).

FEE TRANSMITTAL
For FY 2006

☑ Applicant claims small entity status. See 37 CFR 1.27

TOTAL AMOUNT OF PAYMENT	($)	180.00

Complete if Known	
Application Number	10/600,975
Filing Date	June 20, 2003
First Named Inventor	Michael E. Shanahan
Examiner Name	Temica M. Beamer
Art Unit	2617
Attorney Docket No.	MES/002 CON

METHOD OF PAYMENT (check all that apply)

☐ Check ☑ Credit Card ☐ Money Order ☐ None ☐ Other (please identify): _____

☐ Deposit Account Deposit Account Number: _____ Deposit Account Name: _____

For the above-identified deposit account, the Director is hereby authorized to: (check all that apply)

☑ Charge fee(s) indicated below ☐ Charge fee(s) indicated below, **except for the filing fee**

☑ Charge any additional fee(s) or underpayments of fee(s) under 37 CFR 1.16 and 1.17 ☐ Credit any overpayments

WARNING: Information on this form may become public. Credit card information should not be included on this form. Provide credit card information and authorization on PTO-2038.

FEE CALCULATION (All the fees below are due upon filing or may be subject to a surcharge.)

1. BASIC FILING, SEARCH, AND EXAMINATION FEES

	FILING FEES		SEARCH FEES		EXAMINATION FEES		
Application Type	Fee ($)	Small Entity Fee ($)	Fee ($)	Small Entity Fee ($)	Fee ($)	Small Entity Fee ($)	Fees Paid ($)
Utility	300	150	500	250	200	100	
Design	200	100	100	50	130	65	
Plant	200	100	300	150	160	80	
Reissue	300	150	500	250	600	300	
Provisional	200	100	0	0	0	0	

2. EXCESS CLAIM FEES

Fee Description	Fee ($)	Small Entity Fee ($)
Each claim over 20 (including Reissues)	50	25
Each independent claim over 3 (including Reissues)	200	100
Multiple dependent claims	360	180

Total Claims	Extra Claims	Fee ($)	Fee Paid ($)
_____ - 20 or HP =	_____	x _____	= _____

HP = highest number of total claims paid for, if greater than 20.

Indep. Claims	Extra Claims	Fee ($)	Fee Paid ($)
_____ - 3 or HP =	_____	x _____	= _____

HP = highest number of independent claims paid for, if greater than 3.

Multiple Dependent Claims	
Fee ($)	Fee Paid ($)
_____	_____

3. APPLICATION SIZE FEE

If the specification and drawings exceed 100 sheets of paper (excluding electronically filed sequence or computer listings under 37 CFR 1.52(e)), the application size fee due is $250 ($125 for small entity) for each additional 50 sheets or fraction thereof. See 35 U.S.C. 41(a)(1)(G) and 37 CFR 1.16(s).

Total Sheets	Extra Sheets	Number of each additional 50 or fraction thereof	Fee ($)	Fee Paid ($)
_____ - 100 =	_____	/ 50 = _____ (round up to a whole number)	x _____	= _____

4. OTHER FEE(S)

	Fees Paid ($)
Non-English Specification, $130 fee (no small entity discount)	
Other (e.g., late filing surcharge): IDS fee 37 CFR 1.17 (P)	180.00

SUBMITTED BY

Signature		Registration No. (Attorney/Agent) 45,786	Telephone 201-831-0575
Name (Print/Type)	Scott H. Kaliko, Esq.		Date August 15, 2006

This collection of information is required by 37 CFR 1.136. The information is required to obtain or retain a benefit by the public which is to file (and by the USPTO to process) an application. Confidentiality is governed by 35 U.S.C. 122 and 37 CFR 1.14. This collection is estimated to take 30 minutes to complete, including gathering, preparing, and submitting the completed application form to the USPTO. Time will vary depending upon the individual case. Any comments on the amount of time you require to complete this form and/or suggestions for reducing this burden, should be sent to the Chief Information Officer, U.S. Patent and Trademark Office, U.S. Department of Commerce, P.O. Box 1450, Alexandria, VA 22313-1450. DO NOT SEND FEES OR COMPLETED FORMS TO THIS ADDRESS. **SEND TO: Commissioner for Patents, P.O. Box 1450, Alexandria, VA 22313-1450.**

If you need assistance in completing the form, call 1-800-PTO-9199 and select option 2.

RECEIVED
CENTRAL FAX CENTER
AUG 15 2006

PTO/SB/17 (01-06)
Approved for use through 07/31/2006. OMB 0651-0032
U.S. Patent and Trademark Office: U.S. DEPARTMENT OF COMMERCE
Under the Paperwork Reduction Act of 1995 no persons are required to respond to a collection of information unless it displays a valid OMB control number

Fees pursuant to the Consolidated Appropriations Act, 2005 (H.R. 4818).

FEE TRANSMITTAL
For FY 2006

☑ Applicant claims small entity status. See 37 CFR 1.27

TOTAL AMOUNT OF PAYMENT	($)	180.00

Complete if Known	
Application Number	10/600,975
Filing Date	June 20, 2003
First Named Inventor	Michael E. Shanahan
Examiner Name	Temica M. Beamer
Art Unit	2617
Attorney Docket No.	MES/002 CON

METHOD OF PAYMENT (check all that apply)

☐ Check ☑ Credit Card ☐ Money Order ☐ None ☐ Other (please identify): _____

☐ Deposit Account Deposit Account Number: _____ Deposit Account Name: _____

For the above-identified deposit account, the Director is hereby authorized to: (check all that apply)

☑ Charge fee(s) indicated below ☐ Charge fee(s) indicated below, **except for the filing fee**

☑ Charge any additional fee(s) or underpayments of fee(s) under 37 CFR 1.16 and 1.17 ☐ Credit any overpayments

WARNING: Information on this form may become public. Credit card information should not be included on this form. Provide credit card information and authorization on PTO-2038.

FEE CALCULATION (All the fees below are due upon filing or may be subject to a surcharge.)

1. BASIC FILING, SEARCH, AND EXAMINATION FEES

	FILING FEES		SEARCH FEES		EXAMINATION FEES		
		Small Entity		Small Entity		Small Entity	
Application Type	Fee ($)	Fee ($)	Fee ($)	Fee ($)	Fee ($)	Fee ($)	Fees Paid ($)
Utility	300	150	500	250	200	100	
Design	200	100	100	50	130	65	
Plant	200	100	300	150	160	80	
Reissue	300	150	500	250	600	300	
Provisional	200	100	0	0	0	0	

2. EXCESS CLAIM FEES

Fee Description	Fee ($)	Small Entity Fee ($)
Each claim over 20 (including Reissues)	50	25
Each independent claim over 3 (including Reissues)	200	100
Multiple dependent claims	360	180

Total Claims	Extra Claims	Fee ($)	Fee Paid ($)
_____ - 20 or HP =	_____	x _____	= _____

HP = highest number of total claims paid for, if greater than 20.

Indep. Claims	Extra Claims	Fee ($)	Fee Paid ($)
_____ - 3 or HP =	_____	x _____	= _____

HP = highest number of independent claims paid for, if greater than 3.

Multiple Dependent Claims	
Fee ($)	Fee Paid ($)
_____	_____

3. APPLICATION SIZE FEE

If the specification and drawings exceed 100 sheets of paper (excluding electronically filed sequence or computer listings under 37 CFR 1.52(e)), the application size fee due is $250 ($125 for small entity) for each additional 50 sheets or fraction thereof. See 35 U.S.C. 41(a)(1)(G) and 37 CFR 1.16(s).

Total Sheets	Extra Sheets	Number of each additional 50 or fraction thereof	Fee ($)	Fee Paid ($)
_____ - 100 =	_____	/ 50 = _____ (round up to a whole number)	x _____	= _____

4. OTHER FEE(S)

	Fees Paid ($)
Non-English Specification, $130 fee (no small entity discount)	
Other (e.g., late filing surcharge): IDS fee 37 CFR 1.17 (P)	180.00

SUBMITTED BY

Signature		Registration No. (Attorney/Agent) 45,786	Telephone 201-831-0575
Name (Print/Type)	Scott H. Kaliko, Esq.		Date August 15, 2006

This collection of information is required by 37 CFR 1.136. The information is required to obtain or retain a benefit by the public which is to file (and by the USPTO to process) an application. Confidentiality is governed by 35 U.S.C. 122 and 37 CFR 1.14. This collection is estimated to take 30 minutes to complete, including gathering, preparing, and submitting the completed application form to the USPTO. Time will vary depending upon the individual case. Any comments on the amount of time you require to complete this form and/or suggestions for reducing this burden, should be sent to the Chief Information Officer, U.S. Patent and Trademark Office, U.S. Department of Commerce, P.O. Box 1450, Alexandria, VA 22313-1450. DO NOT SEND FEES OR COMPLETED FORMS TO THIS ADDRESS. **SEND TO: Commissioner for Patents, P.O. Box 1450, Alexandria, VA 22313-1450.**

If you need assistance in completing the form, call 1-800-PTO-9199 and select option 2.

RECEIVED
CENTRAL FAX CENTER
AUG 15 2006

PATENT
MES/002 CON

IN THE UNITED STATES PATENT AND TRADEMARK OFFICE

Applicant	:	Michael E. Shanahan
Serial No.	:	10/600,975 Confirmation No.: 7158
Filed	:	June 20, 2003
Title	:	METHODS AND APPARATUSES FOR PROGRAMMING USER-DEFINED INFORMATION INTO ELECTRONIC DEVICES.
Examiner	:	Temica M. Beamer
Group Art Unit	:	2617

Commissioner for Patents
P.O. Box 1450
Alexandria, VA 22213-1450

INFORMATION DISCLOSURE STATEMENT

Sir:

Pursuant to 37 C.F.R. §§ 1.56, 1.97 and 1.98, applicant hereby makes the documents listed below of record in the above-identified application.

U.S. Patents

Abraham et al.	Patent No. 6,829,618	December, 2004
Galensky et al.	Patent No. 6,845,398	January, 2005

PATENT
MES/002 CON

It is respectfully requested the Examiner fully consider these and any associated documents during the examination of this application, make them of record, and indicate his or her consideration of the documents by initialing the enclosed Citation List adjacent the citation of each document, and print them on any patent that may issue on this application. It is requested that a copy of the initialed Citation form be returned to applicant's undersigned Attorney. Citing of references herein shall not be deemed an admission that such references are prior art. Copies of the cited references are transmitted herewith.

Included is a USPTO Credit Card payment form which authorizes charges for $180.00 in payment of IDS fee pursuant to 37 C.F.R. § 1.17 (p) and § 1.97(c)(2).

Respectfully submitted,

8/15/06
Date

Scott H. Kaliko
Attorney for Applicant
Registration No. 45,786
KALIKO & YEAGER, L.L.C.
500 North Franklin Turnpike
Ramsey, NJ 07446
Direct: 201-831-0575
Fax: 201-831-0519

RECEIVED
CENTRAL FAX CENTER
AUG 15 2006

PTO/SB/08A (07-05)
Approved for use through 07/31/2006. OMB 0651-0031
U.S. Patent and Trademark Office; U.S. DEPARTMENT OF COMMERCE
Under the Paperwork Reduction Act of 1995, no persons are required to respond to a collection of information unless it contains a valid OMB control number.

Substitute for form 1449/PTO

INFORMATION DISCLOSURE STATEMENT BY APPLICANT

(Use as many sheets as necessary)

Sheet 1 of 1

Complete If Known	
Application Number	10/600,975
Filing Date	June 20, 2003
First Named Inventor	Michael E. Shanahan
Art Unit	2617
Examiner Name	Temica M. Beamer
Attorney Docket Number	MES/002 CON

U. S. PATENT DOCUMENTS

Examiner Initials*	Cite No.[1]	Document Number Number-Kind Code[2] (if known)	Publication Date MM-DD-YYYY	Name of Patentee or Applicant of Cited Document	Pages, Columns, Lines, Where Relevant Passages or Relevant Figures Appear
		US- 6,845,398	01-18-2005	Galensky et al.	
		US- 6,829,618	12-07-2004	Abraham et al.	
		US-			
		US-			
		US-			
		US-			
		US-			
		US-			
		US-			
		US-			
		US-			
		US-			
		US-			
		US-			
		US-			
		US-			
		US-			
		US-			
		US-			

FOREIGN PATENT DOCUMENTS

Examiner Initials*	Cite No.[1]	Foreign Patent Document Country Code[3]-Number[4]-Kind Code[5] (if known)	Publication Date MM-DD-YYYY	Name of Patentee or Applicant of Cited Document	Pages, Columns, Lines, Where Relevant Passages Or Relevant Figures Appear	T[6]

Examiner Signature		Date Considered	

*EXAMINER: Initial if reference considered, whether or not citation is in conformance with MPEP 609. Draw line through citation if not in conformance and not considered. Include copy of this form with next communication to applicant. [1] Applicant's unique citation designation number (optional). [2] See Kinds Codes of USPTO Patent Documents at www.uspto.gov or MPEP 901.04. [3] Enter Office that issued the document, by the two-letter code (WIPO Standard ST.3). [4] For Japanese patent documents, the indication of the year of the reign of the Emperor must precede the serial number of the patent document. [5] Kind of document by the appropriate symbols as indicated on the document under WIPO Standard ST.16 if possible. [6] Applicant is to place a check mark here if English language Translation is attached.

This collection of information is required by 37 CFR 1.97 and 1.98. The information is required to obtain or retain a benefit by the public which is to file (and by the USPTO to process) an application. Confidentiality is governed by 35 U.S.C. 122 and 37 CFR 1.14. This collection is estimated to take 2 hours to complete, including gathering, preparing, and submitting the completed application form to the USPTO. Time will vary depending upon the individual case. Any comments on the amount of time you require to complete this form and/or suggestions for reducing this burden, should be sent to the Chief Information Officer, U.S. Patent and Trademark Office, P.O. Box 1450, Alexandria, VA 22313-1450. DO NOT SEND FEES OR COMPLETED FORMS TO THIS ADDRESS. **SEND TO: Commissioner for Patents, P.O. Box 1450, Alexandria, VA 22313-1450.**

If you need assistance in completing the form, call 1-800-PTO-9199 (1-800-786-9199) and select option 2.

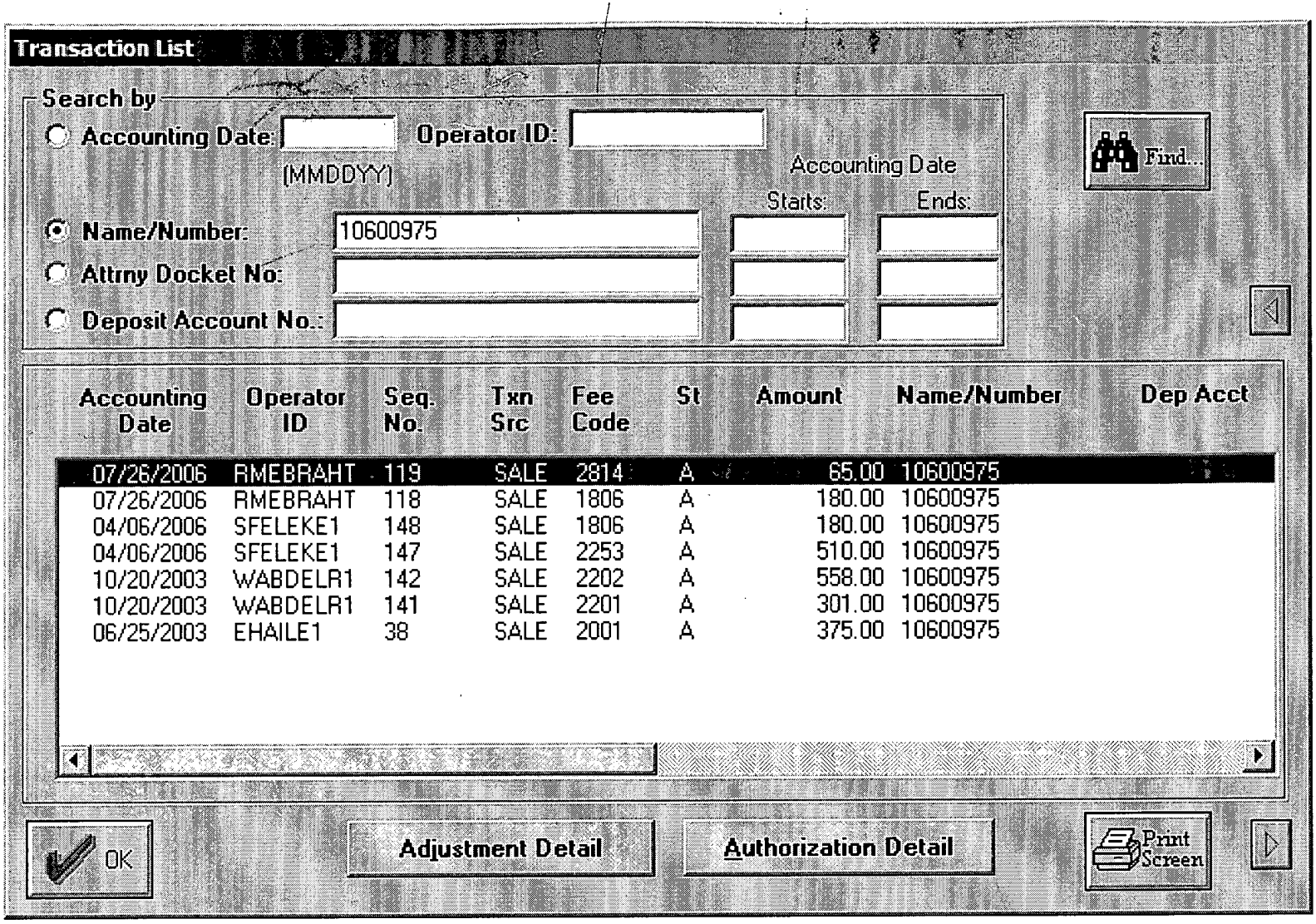
Transaction List
Search by
Accounting Date:
(MMDDYY)
Operator ID:
Accounting Date
Starts:
Ends:
Find...
Name/Number:
10600975
Attrny Docket No:
Deposit Account No.:
Accounting Date
Operator ID
Seq. No.
Txn Src
Fee Code
St
Amount
Name/Number
Dep Acct
07/26/2006 RMEBRAHT 119 SALE 2814 A 65.00 10600975
07/26/2006 RMEBRAHT 118 SALE 1806 A 180.00 10600975
04/06/2006 SFELEKE1 148 SALE 1806 A 180.00 10600975
04/06/2006 SFELEKE1 147 SALE 2253 A 510.00 10600975
10/20/2003 WABDELR1 142 SALE 2202 A 558.00 10600975
10/20/2003 WABDELR1 141 SALE 2201 A 301.00 10600975
06/25/2003 EHAILE1 38 SALE 2001 A 375.00 10600975
OK
Adjustment Detail
Authorization Detail
Print Screen

RECEIVED
CENTRAL FAX CENTER
AUG 15 2006

KALIKO & YEAGER
ATTORNEYS AT LAW
A LIMITED LIABILITY CORPORATION

500 North Franklin Turnpike, Ramsey, NJ 07446
(201) 831-0575 Main Tel
(201) 831-0519 Main Fax

FACSIMILE TRANSMITTAL SHEET

TO: Commissioner for Patents	FROM: Scott H. Kaliko, Esq. SENDER'S FAX NUMBER: 201-831-0519 SENDER'S TELEPHONE NUMBER: 201-831-0575
COMPANY: United States Patent & Trademark Office	DATE: AUGUST 15, 2006
RECIPIENT'S FAX NUMBER: 571-273-8300	TOTAL NO. OF PAGES INCLUDING COVER: 54
RECIPIENT'S TELEPHONE NUMBER:	CLIENT / MATTER:
RE: Application No. 10/600,975	YOUR REFERENCE NUMBER: MFS/002 CON

☐ URGENT ☐ FOR REVIEW ☐ PLEASE COMMENT ☐ PLEASE REPLY ☐ PLEASE RECYCLE

NOTES/COMMENTS:

Please confirm receipt of this fax and the below-identified attached parts.

1. Transmittal Form/Certificate of Transmission; and
2. Fee Transmittal (2 Copies); and
3. Credit Card Payment Form; and
4. Information Disclosure Statement; and
5. PTO Form 1449; and
6. Copies of References.

CONFIDENTIALITY NOTICE

The information contained in this facsimile message is privileged and confidential and is intended only for the use of the individual(s) and/or entity(ies) named above. If you are not the intended recipient, you are hereby notified that any unauthorized disclosure, copying, distribution or taking of any action in reliance on the contents of the information contained herein is strictly prohibited and review by any individual other than the intended recipient shall not constitute a waiver of the attorney-client privilege. If you have received this transmission in error, please immediately notify us by telephone. Thank you.

BEST AVAILABLE COPY

PTO/SB/21 (09-04)
Approved for use through 07/31/2006. OMB 0651-0031
U.S. Patent and Trademark Office: U.S. DEPARTMENT OF COMMERCE
Under the Paperwork Reduction Act of 1995, no persons are required to respond to a collection of information unless it displays a valid OMB control number.

TRANSMITTAL FORM

(to be used for all correspondence after initial filing)

Total Number of Pages in This Submission: 53

Application Number	10/600,975
Filing Date	June 20, 2003
First Named Inventor	Michael E. Shanahan
Art Unit	2617
Examiner Name	Temica M. Beamer
Attorney Docket Number	MES/002 CON

RECEIVED
CENTRAL FAX CENTER
AUG 15 2006

ENCLOSURES (Check all that apply)

- [x] Fee Transmittal Form
  - [x] Fee Attached
- [ ] Amendment/Reply
  - [ ] After Final
  - [ ] Affidavits/declaration(s)
- [ ] Extension of Time Request
- [ ] Express Abandonment Request
- [x] Information Disclosure Statement
- [ ] Certified Copy of Priority Document(s)
- [ ] Reply to Missing Parts/ Incomplete Application
  - [ ] Reply to Missing Parts under 37 CFR 1.52 or 1.53
- [ ] Drawing(s)
- [ ] Licensing-related Papers
- [ ] Petition
- [ ] Petition to Convert to a Provisional Application
- [ ] Power of Attorney, Revocation
- [ ] Change of Correspondence Address
- [ ] Terminal Disclaimer
- [ ] Request for Refund
- [ ] CD, Number of CD(s) _____
  - [ ] Landscape Table on CD
- [ ] After Allowance Communication to TC
- [ ] Appeal Communication to Board of Appeals and Interferences
- [ ] Appeal Communication to TC (Appeal Notice, Brief, Reply Brief)
- [ ] Proprietary Information
- [ ] Status Letter
- [x] Other Enclosure(s) (please identify below):

Remarks

1. Supplemental IDS; and
2. PTO Form 1449; and
3. Credit Card Payment Form; and
4. Copies of References.

SIGNATURE OF APPLICANT, ATTORNEY, OR AGENT

Firm Name	Kaliko & Yeager, L.L.C		
Signature			
Printed name	Scott H. Kaliko, Esq.		
Date	August 15, 2006	Reg. No.	45,786

CERTIFICATE OF TRANSMISSION/MAILING

I hereby certify that this correspondence is being facsimile transmitted to the USPTO or deposited with the United States Postal Service with sufficient postage as first class mail in an envelope addressed to: Commissioner for Patents, P.O. Box 1450, Alexandria, VA 22313-1450 on the date shown below:

Signature			
Typed or printed name	Scott H. Kaliko, Esq.	Date	August 15, 2006

BEST AVAILABLE COPY

This collection of information is required by 37 CFR 1.5. The information is required to obtain or retain a benefit by the public which is to file (and by the USPTO to process) an application. Confidentiality is governed by 35 U.S.C. 122 and 37 CFR 1.11 and1.14. This collection is estimated to 2 hours to complete, including gathering, preparing, and submitting the completed application form to the USPTO. Time will vary depending upon the individual case. Any comments on the amount of time you require to complete this form and/or suggestions for reducing this burden, should be sent to the Chief Information Officer, U.S. Patent and Trademark Office, U.S. Department of Commerce, P.O. Box 1450, Alexandria, VA 22313-1450. DO NOT SEND FEES OR COMPLETED FORMS TO THIS ADDRESS. **SEND TO: Commissioner for Patents, P.O. Box 1450, Alexandria, VA 22313-1450.**

If you need assistance in completing the form, call 1-800-PTO-9199 and select option 2.

PTO/SB/17 (01-06)
Approved for use through 07/31/2006. OMB 0651-0032
U.S. Patent and Trademark Office: U.S. DEPARTMENT OF COMMERCE
Under the Paperwork Reduction Act of 1995 no persons are required to respond to a collection of information unless it displays a valid OMB control number

Fees pursuant to the Consolidated Appropriations Act, 2005 (H.R. 4818).

FEE TRANSMITTAL
For FY 2006

☑ Applicant claims small entity status. See 37 CFR 1.27

TOTAL AMOUNT OF PAYMENT ($) 180.00

Complete If Known	
Application Number	10/600,975
Filing Date	June 20, 2003
First Named Inventor	Michael E. Shanahan
Examiner Name	Temica M. Beamer
Art Unit	2617
Attorney Docket No.	MES/002 CON

RECEIVED
CENTRAL FAX CENTER
AUG 15 2006

METHOD OF PAYMENT (check all that apply)

☐ Check ☑ Credit Card ☐ Money Order ☐ None ☐ Other (please identify): _____

☐ Deposit Account Deposit Account Number: _____ Deposit Account Name: _____

For the above-identified deposit account, the Director is hereby authorized to: (check all that apply)

☑ Charge fee(s) indicated below ☐ Charge fee(s) indicated below, except for the filing fee

☑ Charge any additional fee(s) or underpayments of fee(s) under 37 CFR 1.16 and 1.17 ☐ Credit any overpayments

WARNING: Information on this form may become public. Credit card information should not be included on this form. Provide credit card information and authorization on PTO-2038.

FEE CALCULATION (All the fees below are due upon filing or may be subject to a surcharge.)

1. BASIC FILING, SEARCH, AND EXAMINATION FEES

Application Type	FILING FEES Fee ($)	FILING FEES Small Entity Fee ($)	SEARCH FEES Fee ($)	SEARCH FEES Small Entity Fee ($)	EXAMINATION FEES Fee ($)	EXAMINATION FEES Small Entity Fee ($)	Fees Paid ($)
Utility	300	150	500	250	200	100	
Design	200	100	100	50	130	65	
Plant	200	100	300	150	160	80	
Reissue	300	150	500	250	600	300	
Provisional	200	100	0	0	0	0	

2. EXCESS CLAIM FEES

Fee Description	Fee ($)	Small Entity Fee ($)
Each claim over 20 (including Reissues)	50	25
Each independent claim over 3 (including Reissues)	200	100
Multiple dependent claims	360	180

Total Claims	Extra Claims	Fee ($)	Fee Paid ($)
_____ - 20 or HP =	_____ x	_____ =	_____

HP = highest number of total claims paid for, if greater than 20.

Indep. Claims	Extra Claims	Fee ($)	Fee Paid ($)
_____ - 3 or HP =	_____ x	_____ =	_____

HP = highest number of independent claims paid for, if greater than 3.

Multiple Dependent Claims Fee ($)	Fee Paid ($)
_____	_____

3. APPLICATION SIZE FEE

If the specification and drawings exceed 100 sheets of paper (excluding electronically filed sequence or computer listings under 37 CFR 1.52(e)), the application size fee due is $250 ($125 for small entity) for each additional 50 sheets or fraction thereof. See 35 U.S.C. 41(a)(1)(G) and 37 CFR 1.16(s).

Total Sheets	Extra Sheets	Number of each additional 50 or fraction thereof	Fee ($)	Fee Paid ($)
_____ - 100 =	_____ / 50 =	_____ (round up to a whole number) x	_____ =	_____

4. OTHER FEE(S)

	Fees Paid ($)
Non-English Specification, $130 fee (no small entity discount)	
Other (e.g., late filing surcharge): IDS fee 37 CFR 1.17 (P)	180.00

SUBMITTED BY

Signature		Registration No. (Attorney/Agent) 45,786	Telephone 201-831-0575
Name (Print/Type)	Scott H. Kaliko, Esq.		Date August 15, 2006

This collection of information is required by 37 CFR 1.136. The information is required to obtain or retain a benefit by the public which is to file (and by the USPTO to process) an application. Confidentiality is governed by 35 U.S.C. 122 and 37 CFR 1.14. This collection is estimated to take 30 minutes to complete, including gathering, preparing, and submitting the completed application form to the USPTO. Time will vary depending upon the individual case. Any comments on the amount of time you require to complete this form and/or suggestions for reducing this burden, should be sent to the Chief Information Officer, U.S. Patent and Trademark Office, U.S. Department of Commerce, P.O. Box 1450, Alexandria, VA 22313-1450. DO NOT SEND FEES OR COMPLETED FORMS TO THIS ADDRESS. **SEND TO: Commissioner for Patents, P.O. Box 1450, Alexandria, VA 22313-1450.**

If you need assistance in completing the form, call 1-800-PTO-9199 and select option 2.

BEST AVAILABLE COPY

PTO/SB/17 (01-06)
Approved for use through 07/31/2006. OMB 0651-0032
U.S. Patent and Trademark Office; U.S. DEPARTMENT OF COMMERCE
Under the Paperwork Reduction Act of 1995 no persons are required to respond to a collection of information unless it displays a valid OMB control number

Fees pursuant to the Consolidated Appropriations Act, 2005 (H.R. 4818).

FEE TRANSMITTAL
For FY 2006

☑ Applicant claims small entity status. See 37 CFR 1.27

TOTAL AMOUNT OF PAYMENT ($) 180.00

Complete if Known	
Application Number	10/600,975
Filing Date	June 20, 2003
First Named Inventor	Michael E. Shanahan
Examiner Name	Temica M. Beamer
Art Unit	2617
Attorney Docket No.	MES/002 CON

RECEIVED
CENTRAL FAX CENTER
AUG 15 2006

METHOD OF PAYMENT (check all that apply)

☐ Check ☑ Credit Card ☐ Money Order ☐ None ☐ Other (please identify): _____

☐ Deposit Account Deposit Account Number: _____ Deposit Account Name: _____

For the above-identified deposit account, the Director is hereby authorized to: (check all that apply)

☑ Charge fee(s) indicated below ☐ Charge fee(s) indicated below, **except for the filing fee**

☑ Charge any additional fee(s) or underpayments of fee(s) under 37 CFR 1.16 and 1.17 ☐ Credit any overpayments

WARNING: Information on this form may become public. Credit card information should not be included on this form. Provide credit card information and authorization on PTO-2038.

FEE CALCULATION (All the fees below are due upon filing or may be subject to a surcharge.)

1. BASIC FILING, SEARCH, AND EXAMINATION FEES

	FILING FEES	Small Entity	SEARCH FEES	Small Entity	EXAMINATION FEES	Small Entity	
Application Type	Fee ($)	Fee ($)	Fee ($)	Fee ($)	Fee ($)	Fee ($)	Fees Paid ($)
Utility	300	150	500	250	200	100	
Design	200	100	100	50	130	65	
Plant	200	100	300	150	160	80	
Reissue	300	150	500	250	600	300	
Provisional	200	100	0	0	0	0	

2. EXCESS CLAIM FEES

Fee Description	Fee ($)	Small Entity Fee ($)
Each claim over 20 (including Reissues)	50	25
Each independent claim over 3 (including Reissues)	200	100
Multiple dependent claims	360	180

Total Claims	Extra Claims	Fee ($)	Fee Paid ($)
_____ - 20 or HP =	_____ x	_____ =	_____

HP = highest number of total claims paid for, if greater than 20.

Indep. Claims	Extra Claims	Fee ($)	Fee Paid ($)
_____ - 3 or HP =	_____ x	_____ =	_____

HP = highest number of independent claims paid for, if greater than 3.

Multiple Dependent Claims	
Fee ($)	Fee Paid ($)
_____	_____

3. APPLICATION SIZE FEE

If the specification and drawings exceed 100 sheets of paper (excluding electronically filed sequence or computer listings under 37 CFR 1.52(e)), the application size fee due is $250 ($125 for small entity) for each additional 50 sheets or fraction thereof. See 35 U.S.C. 41(a)(1)(G) and 37 CFR 1.16(s).

Total Sheets	Extra Sheets	Number of each additional 50 or fraction thereof	Fee ($)	Fee Paid ($)
_____ - 100 =	_____ / 50 =	_____ (round up to a whole number) x	_____ =	_____

4. OTHER FEE(S)

	Fees Paid ($)
Non-English Specification, $130 fee (no small entity discount)	
Other (e.g., late filing surcharge): IDS fee 37 CFR 1.17 (P)	180.00

SUBMITTED BY

Signature		Registration No. (Attorney/Agent) 45,786	Telephone 201-631-0575
Name (Print/Type)	Scott H. Kaliko, Esq.		Date August 15, 2006

This collection of information is required by 37 CFR 1.136. The information is required to obtain or retain a benefit by the public which is to file (and by the USPTO to process) an application. Confidentiality is governed by 35 U.S.C. 122 and 37 CFR 1.14. This collection is estimated to take 30 minutes to complete, including gathering, preparing, and submitting the completed application form to the USPTO. Time will vary depending upon the individual case. Any comments on the amount of time you require to complete this form and/or suggestions for reducing this burden, should be sent to the Chief Information Officer, U.S. Patent and Trademark Office, U.S. Department of Commerce, P.O. Box 1450, Alexandria, VA 22313-1450. DO NOT SEND FEES OR COMPLETED FORMS TO THIS ADDRESS. **SEND TO: Commissioner for Patents, P.O. Box 1450, Alexandria, VA 22313-1450.**

If you need assistance in completing the form, call 1-800-PTO-9199 and select option 2.

BEST AVAILABLE COPY

RECEIVED
CENTRAL FAX CENTER
AUG 15 2006

PATENT
MES/002 CON

IN THE UNITED STATES PATENT AND TRADEMARK OFFICE

Applicant	:	Michael E. Shanahan
Serial No.	:	10/600,975 Confirmation No.: 7158
Filed	:	June 20, 2003
Title	:	METHODS AND APPARATUSES FOR PROGRAMMING USER-DEFINED INFORMATION INTO ELECTRONIC DEVICES.
Examiner	:	Temica M. Beamer
Group Art Unit	:	2617

Commissioner for Patents
P.O. Box 1450
Alexandria, VA 22213-1450

INFORMATION DISCLOSURE STATEMENT

Sir:

Pursuant to 37 C.F.R. §§ 1.56, 1.97 and 1.98, applicant hereby makes the documents listed below of record in the above-identified application.

U.S. Patents

Abraham et al.	Patent No. 6,829,618	December, 2004
Galensky et al.	Patent No. 6,845,398	January, 2005

BEST AVAILABLE COPY

PATENT
MES/002 CON

It is respectfully requested the Examiner fully consider these and any associated documents during the examination of this application, make them of record, and indicate his or her consideration of the documents by initialing the enclosed Citation List adjacent the citation of each document, and print them on any patent that may issue on this application. It is requested that a copy of the initialed Citation form be returned to applicant's undersigned Attorney. Citing of references herein shall not be deemed an admission that such references are prior art. Copies of the cited references are transmitted herewith.

Included is a USPTO Credit Card payment form which authorizes charges for $180.00 in payment of IDS fee pursuant to 37 C.F.R. § 1.17 (p) and § 1.97(c)(2).

Respectfully submitted,

8/15/06
Date

Scott H. Kaliko
Attorney for Applicant
Registration No. 45,786
KALIKO & YEAGER, L.L.C.
500 North Franklin Turnpike
Ramsey, NJ 07446
Direct: 201-831-0575
Fax: 201-831-0519

BEST AVAILABLE COPY

RECEIVED
CENTRAL FAX CENTER

AUG 15 2006

PTO/SB/08A (07-05)
Approved for use through 07/31/2006. OMB 0651-0031
U.S. Patent and Trademark Office: U.S. DEPARTMENT OF COMMERCE

Under the Paperwork Reduction Act of 1995, no persons are required to respond to a collection of information unless it contains a valid OMB control number.

Substitute for form 1449/PTO

INFORMATION DISCLOSURE STATEMENT BY APPLICANT

(Use as many sheets as necessary)

Sheet 1 of 1

Complete if Known	
Application Number	10/600,975
Filing Date	June 20, 2003
First Named Inventor	Michael E. Shanahan
Art Unit	2617
Examiner Name	Temica M. Beamer
Attorney Docket Number	MES/002 CON

U. S. PATENT DOCUMENTS

Examiner Initials*	Cite No.[1]	Document Number Number-Kind Code[2] (if known)	Publication Date MM-DD-YYYY	Name of Patentee or Applicant of Cited Document	Pages, Columns, Lines, Where Relevant Passages or Relevant Figures Appear
		US- 6,845,398	01-18-2005	Galensky et al.	
		US- 6,829,618	12-07-2004	Abraham et al.	
		US-			
		US-			
		US-			
		US-			
		US-			
		US-			
		US-			
		US-			
		US-			
		US-			
		US-			
		US-			
		US-			
		US-			
		US-			
		US-			
		US-			
		US-			

FOREIGN PATENT DOCUMENTS

Examiner Initials*	Cite No.[1]	Foreign Patent Document Country Code[3] Number[4] Kind Code[5] (if known)	Publication Date MM-DD-YYYY	Name of Patentee or Applicant of Cited Document	Pages, Columns, Lines, Where Relevant Passages Or Relevant Figures Appear	T[6]

Examiner Signature		Date Considered	

*EXAMINER: Initial if reference considered, whether or not citation is in conformance with MPEP 609. Draw line through citation if not in conformance and not considered. Include copy of this form with next communication to applicant. [1] Applicant's unique citation designation number (optional). [2] See Kinds Codes of USPTO Patent Documents at www.uspto.gov or MPEP 901.04. [3] Enter Office that issued the document, by the two-letter code (WIPO Standard ST.3). [4] For Japanese patent documents, the indication of the year of the reign of the Emperor must precede the serial number of the patent document. [5] Kind of document by the appropriate symbols as indicated on the document under WIPO Standard ST.16 if possible. [6] Applicant is to place a check mark here if English language Translation is attached.

This collection of information is required by 37 CFR 1.97 and 1.98. The information is required to obtain or retain a benefit by the public which is to file (and by the USPTO to process) an application. Confidentiality is governed by 35 U.S.C. 122 and 37 CFR 1.14. This collection is estimated to take 2 hours to complete, including gathering, preparing, and submitting the completed application form to the USPTO. Time will vary depending upon the individual case. Any comments on the amount of time you require to complete this form and/or suggestions for reducing this burden, should be sent to the Chief Information Officer, U.S. Patent and Trademark Office, P.O. Box 1450, Alexandria, VA 22313-1450. DO NOT SEND FEES OR COMPLETED FORMS TO THIS ADDRESS. SEND TO: **Commissioner for Patents, P.O. Box 1450, Alexandria, VA 22313-1450.**

If you need assistance in completing the form, call 1-800-PTO-9199 (1-800-786-9199) and select option 2.

BEST AVAILABLE COPY

Application Number	Application/Control No.	Applicant(s)/Patent under Reexamination	
	10/600,975	SHANAHAN, MICHAEL E.	

Document Code - DISQ	Internal Document – DO NOT MAIL

TERMINAL DISCLAIMER	☒ APPROVED	☐ DISAPPROVED
Date Filed : 07/21/06	This patent is subject to a Terminal Disclaimer	

Approved/Disapproved by:
R. Logan

U.S. Patent and Trademark Office

OIPE
JUL 21 2006
PATENT & TRADEMARK OFFICE

IN THE UNITED STATES PATENT AND TRADEMARK OFFICE

Applicant	:	Michael E. Shanahan
Application No.	:	10/600,975 Confirmation No.: 7158
Filed	:	June 20, 2003
Title	:	METHODS AND APPARATUSES FOR PROGRAMMING USER-DEFINED INFORMATION INTO ELECTRONIC DEVICES
Examiner	:	Temica M. Beamer
Group Art Unit	:	2617

July 20, 2006

Mail Stop Amendment
Commissioner for Patents
P.O. Box 1450
Alexandria, VA 22313-1450

REPLY TO OFFICE ACTION

Sir:

In response to the Office Action dated July 5, 2006:

Remarks begin on page 2 of this paper.

REMARKS

I. Introduction

Claim 1 is cancelled without prejudice.

Claims 2-82 are pending in the application.

Applicant notes with appreciation that claims 2-82 have been indicated as allowable.

Claims 2-82 are rejected pursuant to a non-statutory double patenting rejection.

A supplemental IDS is filed herewith.

Consideration and allowance of this application in light of terminal disclaimer filed herewith is respectfully requested.

II. Applicant's Reply to the Double Patenting Rejection

Claims 2-82 are rejected pursuant to a non-statutory double patenting rejection in light of U.S. Patent No. 6,496,692. Applicant timely files herewith a terminal disclaimer pursuant to 37 C.F.R. § 321 with respect to U.S. Patent No. 6,496,692.

Accordingly, applicant respectfully requests that the double patenting rejection be withdrawn.

III. Conclusion

Based on the above, claims 2-82 are patentable. Thus, applicant respectfully requests that this case, including claims 2-82, proceed to allowance. The Examiner is invited to call the applicant's undersigned representative to discuss any issues relating to this application.

Respectfully submitted,

Dated: 7/20/06

Scott H. Kaliko
Attorney for Applicant
Registration No. 45,786
KALIKO & YEAGER, L.L.C.500
North Franklin Turnpike
Ramsey, NJ 07446
Direct: 201-831-0575
Fax: 201-831-0519

OIPE IAP2
JUL 21 2006
PATENT & TRADEMARK OFFICE

PTO/SB/26 (09-04)
Approved for use through 07/31/2006. OMB 0651-0031
U.S. Patent and Trademark Office; U.S. DEPARTMENT OF COMMERCE
Under the Paperwork Reduction Act of 1995, no persons are required to respond to a collection of information unless it displays a valid OMB control number.

TERMINAL DISCLAIMER TO OBVIATE A DOUBLE PATENTING REJECTION OVER A "PRIOR" PATENT

Docket Number (Optional)
MES/002 CON

In re Application of: Michael E. Shanahan

Application No.: 10/600,975

Filed: 6/20/2003

For: Methods and Apparatuses for Programming User-Defined Information into Electronic Devices

The owner*, Twenty Year Innovations, Inc., of 100 percent interest in the instant application hereby disclaims, except as provided below, the terminal part of the statutory term of any patent granted on the instant application which would extend beyond the expiration date of the full statutory term **prior patent** No. 6,496,692 as the term of said prior patent is defined in 35 U.S.C. 154 and 173, and as the term of said **prior patent** is presently shortened by any terminal disclaimer. The owner hereby agrees that any patent so granted on the instant application shall be enforceable only for and during such period that it and the **prior patent** are commonly owned. This agreement runs with any patent granted on the instant application and is binding upon the grantee, its successors or assigns.

In making the above disclaimer, the owner does not disclaim the terminal part of the term of any patent granted on the instant application that would extend to the expiration date of the full statutory term as defined in 35 U.S.C. 154 and 173 of the **prior patent**, "as the term of said **prior patent** is presently shortened by any terminal disclaimer," in the event that said **prior patent** later:

expires for failure to pay a maintenance fee;
is held unenforceable;
is found invalid by a court of competent jurisdiction;
is statutorily disclaimed in whole or terminally disclaimed under 37 CFR 1.321;
has all claims canceled by a reexamination certificate;
is reissued; or
is in any manner terminated prior to the expiration of its full statutory term as presently shortened by any terminal disclaimer.

Check either box 1 or 2 below, if appropriate.

1. ☐ For submissions on behalf of a business/organization (e.g., corporation, partnership, university, government agency, etc.), the undersigned is empowered to act on behalf of the business/organization.

I hereby declare that all statements made herein of my own knowledge are true and that all statements made on information and belief are believed to be true; and further that these statements were made with the knowledge that willful false statements and the like so made are punishable by fine or imprisonment, or both, under Section 1001 of Title 18 of the United States Code and that such willful false statements may jeopardize the validity of the application or any patent issued thereon.

2. ☑ The undersigned is an attorney or agent of record. Reg. No. 45,786

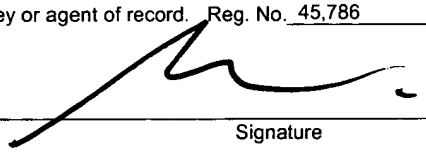

Signature — 7/20/2006 Date

07/26/2006 RMEBRAHT 00000089 10600975
02 FC:2814 65.00 OP

Scott H. Kaliko, Esq.
Typed or printed name

201-831-0575
Telephone Number

☑ Terminal disclaimer fee under 37 CFR 1.20(d) included.

WARNING: Information on this form may become public. Credit card information should not be included on this form. Provide credit card information and authorization on PTO-2038.

*Statement under 37 CFR 3.73(b) is required if terminal disclaimer is signed by the assignee (owner).
Form PTO/SB/96 may be used for making this certification. See MPEP § 324.

This collection of information is required by 37 CFR 1.321. The information is required to obtain or retain a benefit by the public which is to file (and by the USPTO to process) an application. Confidentiality is governed by 35 U.S.C. 122 and 37 CFR 1.11 and 1.14. This collection is estimated to take 12 minutes to complete, including gathering, preparing, and submitting the completed application form to the USPTO. Time will vary depending upon the individual case. Any comments on the amount of time you require to complete this form and/or suggestions for reducing this burden, should be sent to the Chief Information Officer, U.S. Patent and Trademark Office, U.S. Department of Commerce, P.O. Box 1450, Alexandria, VA 22313-1450. DO NOT SEND FEES OR COMPLETED FORMS TO THIS ADDRESS. **SEND TO: Commissioner for Patents, P.O. Box 1450, Alexandria, VA 22313-1450.**

If you need assistance in completing the form, call 1-800-PTO-9199 and select option 2.

IN THE UNITED STATES PATENT AND TRADEMARK OFFICE

Applicant	:	Michael E. Shanahan
Serial No.	:	10/600,975 Confirmation No.: 7158
Filed	:	June 20, 2003
Title	:	METHODS AND APPARATUSES FOR PROGRAMMING USER-DEFINED INFORMATION INTO ELECTRONIC DEVICES
Examiner	:	Temica M. Beamer
Group Art Unit	:	2617

Commissioner for Patents
P.O. Box 1450
Alexandria, VA 22213-1450

INFORMATION DISCLOSURE STATEMENT

Sir:

Pursuant to 37 C.F.R. §§ 1.56, 1.97 and 1.98, applicant hereby makes the documents listed below of record in the above-identified application.

U.S. Patents

Leermakers	Patent No. 6,928,468	August, 2005
Bowman-Amulah	Patent No. 6,477,580	November, 2002
Aho et al.	Patent No. 6,198,941	March, 2001
Bottum	Patent No. 6,014,569	January, 2000

07/26/2006 RMEBRAHT 00000089 10600975
01 FC:1806 180.00 OP

U.S. Patent Applications

Cao et al. US-2005/0054379 A1 March, 2005

It is respectfully requested the Examiner fully consider these and any associated documents during the examination of this application, make them of record, and indicate his or her consideration of the documents by initialing the enclosed Citation List adjacent the citation of each document, and print them on any patent that may issue on this application. It is requested that a copy of the initialed Citation form be returned to applicant's undersigned Attorney. Citing of references herein shall not be deemed an admission that such references are prior art. Copies of the cited references are transmitted herewith.

Included is a USPTO Credit Card payment form which authorizes charges for $180.00 in payment of IDS fee pursuant to 37 C.F.R. § 1.17 (p) and § 1.97(c)(2) and the Terminal Disclaimer fee of $65.00 pursuant to 37 C.F.R. § 1.321 and § 1.27 (total of $245)

Respectfully submitted,

7/25/06
Date

Scott H. Kaliko
Attorney for Applicant
Registration No. 45,786
KALIKO & YEAGER, L.L.C.
500 North Franklin Turnpike
Ramsey, NJ 07446
Direct: 201-831-0575
Fax: 201-831-0519

OIPE IAP2 JUL 21 2006 PATENT & TRADEMARK OFFICE

PTO/SB/08A (07-05)
Approved for use through 07/31/2006. OMB 0651-0031
U.S. Patent and Trademark Office; U.S. DEPARTMENT OF COMMERCE
Under the Paperwork Reduction Act of 1995, no persons are required to respond to a collection of information unless it contains a valid OMB control number.

Substitute for form 1449/PTO

INFORMATION DISCLOSURE STATEMENT BY APPLICANT

(Use as many sheets as necessary)

Sheet 1 of 1

Complete if Known	
Application Number	10/600,975
Filing Date	June 20, 2003
First Named Inventor	Michael E. Shanahan
Art Unit	2617
Examiner Name	Temica M. Beamer
Attorney Docket Number	MES/002 CON

U. S. PATENT DOCUMENTS

Examiner Initials*	Cite No.[1]	Document Number Number-Kind Code[2] *(if known)*	Publication Date MM-DD-YYYY	Name of Patentee or Applicant of Cited Document	Pages, Columns, Lines, Where Relevant Passages or Relevant Figures Appear
		US- 6,928,468	08-09-2005	Leersmakers	
		US- 6,477,580	11-05-2002	Bowman-Amulah	
		US- 6,198,941	03-06-2001	Aho et al.	
		US- 6,014,569	01-11-2000	Bottum	
		US- 2005/0054379	03-10-2005	Cao et al.	
		US-			
		US-			
		US-			
		US-			
		US-			
		US-			
		US-			
		US-			
		US-			
		US-			
		US-			
		US-			
		US-			
		US-			
		US-			

FOREIGN PATENT DOCUMENTS

Examiner Initials*	Cite No.[1]	Foreign Patent Document Country Code[3]-Number[4]-Kind Code[5] *(if known)*	Publication Date MM-DD-YYYY	Name of Patentee or Applicant of Cited Document	Pages, Columns, Lines, Where Relevant Passages Or Relevant Figures Appear	T[6]

Examiner Signature		Date Considered	

*EXAMINER: Initial if reference considered, whether or not citation is in conformance with MPEP 609. Draw line through citation if not in conformance and not considered. Include copy of this form with next communication to applicant. [1] Applicant's unique citation designation number (optional). [2] See Kinds Codes of USPTO Patent Documents at www.uspto.gov or MPEP 901.04. [3] Enter Office that issued the document, by the two-letter code (WIPO Standard ST.3). [4] For Japanese patent documents, the indication of the year of the reign of the Emperor must precede the serial number of the patent document. [5] Kind of document by the appropriate symbols as indicated on the document under WIPO Standard ST.16 if possible. [6] Applicant is to place a check mark here if English language Translation is attached.

This collection of information is required by 37 CFR 1.97 and 1.98. The information is required to obtain or retain a benefit by the public which is to file (and by the USPTO to process) an application. Confidentiality is governed by 35 U.S.C. 122 and 37 CFR 1.14. This collection is estimated to take 2 hours to complete, including gathering, preparing, and submitting the completed application form to the USPTO. Time will vary depending upon the individual case. Any comments on the amount of time you require to complete this form and/or suggestions for reducing this burden, should be sent to the Chief Information Officer, U.S. Patent and Trademark Office, P.O. Box 1450, Alexandria, VA 22313-1450. DO NOT SEND FEES OR COMPLETED FORMS TO THIS ADDRESS. **SEND TO: Commissioner for Patents, P.O. Box 1450, Alexandria, VA 22313-1450.**

If you need assistance in completing the form, call 1-800-PTO-9199 (1-800-786-9199) and select option 2.

OIPE IAP2
JUL 21 2006
PATENT & TRADEMARK OFFICE

PTO/SB/21 (09-04)
Approved for use through 07/31/2006. OMB 0651-0031
U.S. Patent and Trademark Office; U.S. DEPARTMENT OF COMMERCE
Under the Paperwork Reduction Act of 1995, no persons are required to respond to a collection of information unless it displays a valid OMB control number.

TRANSMITTAL FORM

(to be used for all correspondence after initial filing)

Total Number of Pages in This Submission: 302

Application Number	10/600,975
Filing Date	June 20, 2003
First Named Inventor	Michael E. Shanahan
Art Unit	2617
Examiner Name	Temica M. Beamer
Attorney Docket Number	MES/002 CON

ENCLOSURES *(Check all that apply)*

- [x] Fee Transmittal Form
  - [x] Fee Attached
- [ ] Amendment/Reply
  - [ ] After Final
  - [ ] Affidavits/declaration(s)
- [ ] Extension of Time Request
- [ ] Express Abandonment Request
- [x] Information Disclosure Statement
- [ ] Certified Copy of Priority Document(s)
- [ ] Reply to Missing Parts/ Incomplete Application
  - [ ] Reply to Missing Parts under 37 CFR 1.52 or 1.53
- [ ] Drawing(s)
- [ ] Licensing-related Papers
- [ ] Petition
- [ ] Petition to Convert to a Provisional Application
- [ ] Power of Attorney, Revocation Change of Correspondence Address
- [ ] Terminal Disclaimer
- [ ] Request for Refund
- [ ] CD, Number of CD(s) _____
  - [ ] Landscape Table on CD
- [ ] After Allowance Communication to TC
- [ ] Appeal Communication to Board of Appeals and Interferences
- [ ] Appeal Communication to TC **(Appeal Notice, Brief, Reply Brief)**
- [ ] Proprietary Information
- [ ] Status Letter
- [x] Other Enclosure(s) (please Identify below):

Remarks

1. Supplemental IDS; and
2. Information Disclosure Statement; and
3. Credit Card Payment Form; and
4. Copies of References; and
5. Reply to Office Action.

SIGNATURE OF APPLICANT, ATTORNEY, OR AGENT

Firm Name	Kaliko & Yeager, L.L.C		
Signature			
Printed name	Scott H. Kaliko, Esq.		
Date	July 20, 2006	Reg. No.	45,786

CERTIFICATE OF TRANSMISSION/MAILING

I hereby certify that this correspondence is being facsimile transmitted to the USPTO or deposited with the United States Postal Service with sufficient postage as first class mail in an envelope addressed to: Commissioner for Patents, P.O. Box 1450, Alexandria, VA 22313-1450 on the date shown below:

Signature			
Typed or printed name	Scott H. Kaliko, Esq.	Date	July 20, 2006

This collection of information is required by 37 CFR 1.5. The information is required to obtain or retain a benefit by the public which is to file (and by the USPTO to process) an application. Confidentiality is governed by 35 U.S.C. 122 and 37 CFR 1.11 and1.14. This collection is estimated to 2 hours to complete, including gathering, preparing, and submitting the completed application form to the USPTO. Time will vary depending upon the individual case. Any comments on the amount of time you require to complete this form and/or suggestions for reducing this burden, should be sent to the Chief Information Officer, U.S. Patent and Trademark Office, U.S. Department of Commerce, P.O. Box 1450, Alexandria, VA 22313-1450. DO NOT SEND FEES OR COMPLETED FORMS TO THIS ADDRESS. **SEND TO: Commissioner for Patents, P.O. Box 1450, Alexandria, VA 22313-1450.**

If you need assistance in completing the form, call 1-800-PTO-9199 and select option 2.

OIPE IAP2 JUL 21 2006 PATENT & TRADEMARK OFFICE

PTO/SB/17 (01-06)
Approved for use through 07/31/2006. OMB 0651-0032
U.S. Patent and Trademark Office; U.S. DEPARTMENT OF COMMERCE
Under the Paperwork Reduction Act of 1995 no persons are required to respond to a collection of information unless it displays a valid OMB control number

Fees pursuant to the Consolidated Appropriations Act, 2005 (H.R. 4818).

FEE TRANSMITTAL
For FY 2006

☑ Applicant claims small entity status. See 37 CFR 1.27

TOTAL AMOUNT OF PAYMENT ($) 245.00

Complete if Known	
Application Number	10/600,975
Filing Date	June 20, 2003
First Named Inventor	Michael E. Shanahan
Examiner Name	Temica M. Beamer
Art Unit	2617
Attorney Docket No.	MES/002 CON

METHOD OF PAYMENT (check all that apply)

☐ Check ☑ Credit Card ☐ Money Order ☐ None ☐ Other (please identify): _____

☐ Deposit Account Deposit Account Number: _____ Deposit Account Name: _____

For the above-identified deposit account, the Director is hereby authorized to: (check all that apply)

☑ Charge fee(s) indicated below ☐ Charge fee(s) indicated below, **except for the filing fee**

☑ Charge any additional fee(s) or underpayments of fee(s) under 37 CFR 1.16 and 1.17 ☐ Credit any overpayments

WARNING: Information on this form may become public. Credit card information should not be included on this form. Provide credit card information and authorization on PTO-2038.

FEE CALCULATION (All the fees below are due upon filing or may be subject to a surcharge.)

1. BASIC FILING, SEARCH, AND EXAMINATION FEES

	FILING FEES		SEARCH FEES		EXAMINATION FEES		
		Small Entity		Small Entity		Small Entity	
Application Type	Fee ($)	Fee ($)	Fee ($)	Fee ($)	Fee ($)	Fee ($)	Fees Paid ($)
Utility	300	150	500	250	200	100	
Design	200	100	100	50	130	65	
Plant	200	100	300	150	160	80	
Reissue	300	150	500	250	600	300	
Provisional	200	100	0	0	0	0	

2. EXCESS CLAIM FEES

Fee Description	Fee ($)	Small Entity Fee ($)
Each claim over 20 (including Reissues)	50	25
Each independent claim over 3 (including Reissues)	200	100
Multiple dependent claims	360	180

Total Claims		Extra Claims	Fee ($)		Fee Paid ($)
_____	- 20 or HP =	_____	x _____	=	_____

HP = highest number of total claims paid for, if greater than 20.

Indep. Claims		Extra Claims	Fee ($)		Fee Paid ($)
_____	- 3 or HP =	_____	x _____	=	_____

HP = highest number of independent claims paid for, if greater than 3.

Multiple Dependent Claims	
Fee ($)	Fee Paid ($)
_____	_____

3. APPLICATION SIZE FEE

If the specification and drawings exceed 100 sheets of paper (excluding electronically filed sequence or computer listings under 37 CFR 1.52(e)), the application size fee due is $250 ($125 for small entity) for each additional 50 sheets or fraction thereof. See 35 U.S.C. 41(a)(1)(G) and 37 CFR 1.16(s).

Total Sheets		Extra Sheets		Number of each additional 50 or fraction thereof		Fee ($)		Fee Paid ($)
_____	- 100 =	_____	/ 50 =	_____	(round **up** to a whole number) x	_____	=	_____

4. OTHER FEE(S)

	Fees Paid ($)
Non-English Specification, $130 fee (no small entity discount)	
Other (e.g., late filing surcharge): IDS fee 37 CFR 1.17 (P)Terminal Disclaimer Fee 37 CFR 1.321 and 1.27	245.00

SUBMITTED BY

Signature		Registration No. (Attorney/Agent) 45,786	Telephone 201-831-0575
Name (Print/Type)	Scott H. Kaliko, Esq.		Date July 20, 2006

This collection of information is required by 37 CFR 1.136. The information is required to obtain or retain a benefit by the public which is to file (and by the USPTO to process) an application. Confidentiality is governed by 35 U.S.C. 122 and 37 CFR 1.14. This collection is estimated to take 30 minutes to complete, including gathering, preparing, and submitting the completed application form to the USPTO. Time will vary depending upon the individual case. Any comments on the amount of time you require to complete this form and/or suggestions for reducing this burden, should be sent to the Chief Information Officer, U.S. Patent and Trademark Office, U.S. Department of Commerce, P.O. Box 1450, Alexandria, VA 22313-1450. DO NOT SEND FEES OR COMPLETED FORMS TO THIS ADDRESS. **SEND TO: Commissioner for Patents, P.O. Box 1450, Alexandria, VA 22313-1450.**

If you need assistance in completing the form, call 1-800-PTO-9199 and select option 2.

07-24-06

OIPE IAP2 JUL 21 2006 PATENT & TRADEMARK OFFICE

IFW CC

PATENTS
Attorney Docket No.: MES/002 CON

IN THE UNITED STATES PATENT AND TRADEMARK OFFICE

Applicant:	Michael E. Shanahan
Application No.:	10/600,975
Title of Invention:	METHODS AND APPARTUSES FOR PROGRAMMING USER-DEFINED INFORMATION INTO ELECTRONIC DEVICES.
Filed:	JUNE 20, 2003
Group No.:	2617
Examiner:	Temica M. Beamer

Commissioner for Patents
P.O. Box 1450
Alexandria, VA 22313-1450

EXPRESS MAIL CERTIFICATE

"Express Mail" label number:
Date of Deposit: July 20, 2006

I hereby state that the following *attached* paper or fee

1. Transmittal Form; and
2. Fee Transmittal Form; and
3. Credit Card Payment Form; and
4. Reply to Office Action; and
5. Terminal Disclaimer; and
6. Information Disclosure Statement; and
7. PTO Form 1449; and
8. Copies of References; and
9. Return Post Card.

is being deposited with the United States Postal Service "Express Mail Post Office to Addressee" service under 37 C.F.R. § 1.10, on the date indicated above and is addressed to the Commissioner for Patents, P.O. Box 1450, Alexandria, VA 22313-1450.

Mandy C. Ellis

Signature
Mandy C. Ellis

PTO/SB/06 (12-04)
Approved for use through 7/31/2006. OMB 0651-0032
U.S. Patent and Trademark Office; U.S. DEPARTMENT OF COMMERCE
Under the Paperwork Reduction Act of 1995, no persons are required to respond to a collection of information unless it displays a valid OMB control number.

PATENT APPLICATION FEE DETERMINATION RECORD
Substitute for Form PTO-875

Application or Docket Number: 10/600975

APPLICATION AS FILED – PART I

FOR	(Column 1) NUMBER FILED	(Column 2) NUMBER EXTRA	SMALL ENTITY RATE ($)	SMALL ENTITY FEE ($)	OR	OTHER THAN SMALL ENTITY RATE ($)	OTHER THAN SMALL ENTITY FEE ($)
BASIC FEE (37 CFR 1.16(a), (b), or (c))							
SEARCH FEE (37 CFR 1.16(k), (l), or (m))							
EXAMINATION FEE (37 CFR 1.16(o), (p), or (q))							
TOTAL CLAIMS (37 CFR 1.16(i))	minus 20 =	*	X =		OR	X =	
INDEPENDENT CLAIMS (37 CFR 1.16(h))	minus 3 =	*	X =			X =	
APPLICATION SIZE FEE (37 CFR 1.16(s))	If the specification and drawings exceed 100 sheets of paper, the application size fee due is $250 ($125 for small entity) for each additional 50 sheets or fraction thereof. See 35 U.S.C. 41(a)(1)(G) and 37 CFR 1.16(s).						
MULTIPLE DEPENDENT CLAIM PRESENT (37 CFR 1.16(j))							
			TOTAL			TOTAL	

* If the difference in column 1 is less than zero, enter "0" in column 2.

APPLICATION AS AMENDED – PART II

7-21-06

AMENDMENT A

	(Column 1) CLAIMS REMAINING AFTER AMENDMENT		(Column 2) HIGHEST NUMBER PREVIOUSLY PAID FOR	(Column 3) PRESENT EXTRA	SMALL ENTITY RATE ($)	SMALL ENTITY ADDITIONAL FEE ($)	OR	OTHER THAN SMALL ENTITY RATE ($)	OTHER THAN SMALL ENTITY ADDITIONAL FEE ($)
Total (37 CFR 1.16(i))	* 81	Minus	** 97	= 8	X =		OR	X =	
Independent (37 CFR 1.16(h))	* 9	Minus	** 10	= 8	X =		OR	X =	
Application Size Fee (37 CFR 1.16(s))							OR		
FIRST PRESENTATION OF MULTIPLE DEPENDENT CLAIM (37 CFR 1.16(j))					TOTAL ADD'L FEE		OR	TOTAL ADD'L FEE	

AMENDMENT B

	(Column 1) CLAIMS REMAINING AFTER AMENDMENT		(Column 2) HIGHEST NUMBER PREVIOUSLY PAID FOR	(Column 3) PRESENT EXTRA	RATE ($)	ADDITIONAL FEE ($)	OR	RATE ($)	ADDITIONAL FEE ($)
Total (37 CFR 1.16(i))	*	Minus	**	=	X =		OR	X =	
Independent (37 CFR 1.16(h))	*	Minus	***	=	X =		OR	X =	
Application Size Fee (37 CFR 1.16(s))							OR		
FIRST PRESENTATION OF MULTIPLE DEPENDENT CLAIM (37 CFR 1.16(j))					TOTAL ADD'L FEE		OR	TOTAL ADD'L FEE	

* If the entry in column 1 is less than the entry in column 2, write "0" in column 3.
** If the "Highest Number Previously Paid For" IN THIS SPACE is less than 20, enter "20".
*** If the "Highest Number Previously Paid For" IN THIS SPACE is less than 3, enter "3".
The "Highest Number Previously Paid For" (Total or Independent) is the highest number found in the appropriate box in column 1.

This collection of information is required by 37 CFR 1.16. The information is required to obtain or retain a benefit by the public which is to file (and by the USPTO to process) an application. Confidentiality is governed by 35 U.S.C. 122 and 37 CFR 1.14. This collection is estimated to take 12 minutes to complete, including gathering, preparing, and submitting the completed application form to the USPTO. Time will vary depending upon the individual case. Any comments on the amount of time you require to complete this form and/or suggestions for reducing this burden, should be sent to the Chief Information Officer, U.S. Patent and Trademark Office, U.S. Department of Commerce, P.O. Box 1450, Alexandria, VA 22313-1450. DO NOT SEND FEES OR COMPLETED FORMS TO THIS ADDRESS. **SEND TO: Commissioner for Patents, P.O. Box 1450, Alexandria, VA 22313-1450.**

If you need assistance in completing the form, call 1-800-PTO-9199 and select option 2.

UNITED STATES PATENT AND TRADEMARK OFFICE

UNITED STATES DEPARTMENT OF COMMERCE
United States Patent and Trademark Office
Address: COMMISSIONER FOR PATENTS
P.O. Box 1450
Alexandria, Virginia 22313-1450
www.uspto.gov

APPLICATION NO.	FILING DATE	FIRST NAMED INVENTOR	ATTORNEY DOCKET NO.	CONFIRMATION NO.
10/600,975	06/20/2003	Michael E. Shanahan	MES/002CON	7158

39550 7590 07/05/2006

KALIKO & YEAGER, L.L.C.
500 NORTH FRANKLIN TURNPIKE
RAMSEY, NJ 07446

EXAMINER	
BEAMER, TEMICA M	

ART UNIT	PAPER NUMBER
2617	

DATE MAILED: 07/05/2006

Please find below and/or attached an Office communication concerning this application or proceeding.

Office Action Summary	Application No.	Applicant(s)	
	10/600,975	SHANAHAN, MICHAEL E.	
	Examiner	Art Unit	
	Temica M. Beamer	2617	

-- The MAILING DATE of this communication appears on the cover sheet with the correspondence address --

Period for Reply

A SHORTENED STATUTORY PERIOD FOR REPLY IS SET TO EXPIRE 3 MONTH(S) OR THIRTY (30) DAYS, WHICHEVER IS LONGER, FROM THE MAILING DATE OF THIS COMMUNICATION.

- Extensions of time may be available under the provisions of 37 CFR 1.136(a). In no event, however, may a reply be timely filed after SIX (6) MONTHS from the mailing date of this communication.
- If NO period for reply is specified above, the maximum statutory period will apply and will expire SIX (6) MONTHS from the mailing date of this communication.
- Failure to reply within the set or extended period for reply will, by statute, cause the application to become ABANDONED (35 U.S.C. § 133). Any reply received by the Office later than three months after the mailing date of this communication, even if timely filed, may reduce any earned patent term adjustment. See 37 CFR 1.704(b).

Status

1)☒ Responsive to communication(s) filed on *05 April 2006*.

2a)☐ This action is **FINAL**. 2b)☒ This action is non-final.

3)☐ Since this application is in condition for allowance except for formal matters, prosecution as to the merits is closed in accordance with the practice under *Ex parte Quayle*, 1935 C.D. 11, 453 O.G. 213.

Disposition of Claims

4)☒ Claim(s) *2-82* is/are pending in the application.

4a) Of the above claim(s) _____ is/are withdrawn from consideration.

5)☐ Claim(s) _____ is/are allowed.

6)☒ Claim(s) *2-82* is/are rejected.

7)☐ Claim(s) _____ is/are objected to.

8)☐ Claim(s) _____ are subject to restriction and/or election requirement.

Application Papers

9)☐ The specification is objected to by the Examiner.

10)☐ The drawing(s) filed on _____ is/are: a)☐ accepted or b)☐ objected to by the Examiner.

Applicant may not request that any objection to the drawing(s) be held in abeyance. See 37 CFR 1.85(a).

Replacement drawing sheet(s) including the correction is required if the drawing(s) is objected to. See 37 CFR 1.121(d).

11)☐ The oath or declaration is objected to by the Examiner. Note the attached Office Action or form PTO-152.

Priority under 35 U.S.C. § 119

12)☐ Acknowledgment is made of a claim for foreign priority under 35 U.S.C. § 119(a)-(d) or (f).

a)☐ All b)☐ Some * c)☐ None of:

1.☐ Certified copies of the priority documents have been received.

2.☐ Certified copies of the priority documents have been received in Application No. _____.

3.☐ Copies of the certified copies of the priority documents have been received in this National Stage application from the International Bureau (PCT Rule 17.2(a)).

* See the attached detailed Office action for a list of the certified copies not received.

Attachment(s)

1) ☒ Notice of References Cited (PTO-892)
2) ☐ Notice of Draftsperson's Patent Drawing Review (PTO-948)
3) ☒ Information Disclosure Statement(s) (PTO-1449 or PTO/SB/08) Paper No(s)/Mail Date _____.
4) ☐ Interview Summary (PTO-413) Paper No(s)/Mail Date. _____.
5) ☐ Notice of Informal Patent Application (PTO-152)
6) ☐ Other: _____.

DETAILED ACTION

Response to Arguments

1. Applicant's arguments, see pages 7-12 of "Remarks", filed April 5, 2006, with respect to the rejection(s) of claim(s) 2-82 under 102 have been fully considered and are persuasive. Therefore, the rejection has been withdrawn. However, upon further consideration, a new ground(s) of rejection is made in view of Shanahan, U.S. Patent No. 6,496,692.

Double Patenting

2. The nonstatutory double patenting rejection is based on a judicially created doctrine grounded in public policy (a policy reflected in the statute) so as to prevent the unjustified or improper timewise extension of the "right to exclude" granted by a patent and to prevent possible harassment by multiple assignees. A nonstatutory obviousness-type double patenting rejection is appropriate where the conflicting claims are not identical, but at least one examined application claim is not patentably distinct from the reference claim(s) because the examined application claim is either anticipated by, or would have been obvious over, the reference claim(s). See, e.g., *In re Berg*, 140 F.3d 1428, 46 USPQ2d 1226 (Fed. Cir. 1998); *In re Goodman*, 11 F.3d 1046, 29 USPQ2d 2010 (Fed. Cir. 1993); *In re Longi*, 759 F.2d 887, 225 USPQ 645 (Fed. Cir. 1985); *In re Van Ornum*, 686 F.2d 937, 214 USPQ 761 (CCPA 1982); *In re Vogel*, 422

F.2d 438, 164 USPQ 619 (CCPA 1970); and *In re Thorington*, 418 F.2d 528, 163 USPQ 644 (CCPA 1969).

A timely filed terminal disclaimer in compliance with 37 CFR 1.321(c) or 1.321(d) may be used to overcome an actual or provisional rejection based on a nonstatutory double patenting ground provided the conflicting application or patent either is shown to be commonly owned with this application, or claims an invention made as a result of activities undertaken within the scope of a joint research agreement.

Effective January 1, 1994, a registered attorney or agent of record may sign a terminal disclaimer. A terminal disclaimer signed by the assignee must fully comply with 37 CFR 3.73(b).

3. Claims 2-82 are rejected on the ground of nonstatutory obviousness-type double patenting as being unpatentable over claims 1-9 of U.S. Patent No. 6,496,692. Although the conflicting claims are not identical, they are not patentably distinct from each other because both inventions are drawn to programming telephones with files for use as indicia of an incoming communication. Specifically, the present invention calls for the files to be video files while U.S. Patent No. 6,496,692 calls for the files to be audio files. The examiner contends, however, that video files can be considered audio files since video data is known to be "accompanied" with audio data and the examiner takes official notice as such.

At the time of invention, it would have been obvious to a person of ordinary skill in the art to modify the present invention with audio data so a user can hear the video in addition to viewing the video.

Allowable Subject Matter

4. Claims 2-82 are allowable once the double patenting rejection is overcome.

5. The following is a statement of reasons for the indication of allowable subject matter: Prior art fails to suggest or render obvious the method of customizing a wireless telephone by programming a video file into the wireless phone for use as an indicia of an incoming call as explicitly described.

Conclusion

6. Any inquiry concerning this communication or earlier communications from the examiner should be directed to Temica M. Beamer whose telephone number is (571) 272-7797. The examiner can normally be reached on Monday-Thursday (alternate Fridays) 7:00am-4:00pm.

If attempts to reach the examiner by telephone are unsuccessful, the examiner's supervisor, Marsha Banks-Harold can be reached on (571) 272-7905. The fax phone number for the organization where this application or proceeding is assigned is 571-273-8300.

Information regarding the status of an application may be obtained from the Patent Application Information Retrieval (PAIR) system. Status information for published applications may be obtained from either Private PAIR or Public PAIR. Status information for unpublished applications is available through Private PAIR only. For more information about the PAIR system, see http://pair-direct.uspto.gov. Should you have questions on access to the Private PAIR system, contact the Electronic Business Center (EBC) at 866-217-9197 (toll-free). If you would like assistance from a USPTO Customer Service Representative or access to the automated information system, call 800-786-9199 (IN USA OR CANADA) or 571-272-1000.

Temica M. Beamer
Primary Examiner
Art Unit 2617

tmb

Temica M. Beamer
TEMICA BEAMER
PRIMARY EXAMINER
6/23/06

RECEIVED
CENTRAL FAX CENTER

APR - 5 2006

PATENT
MES/002 CON

IN THE UNITED STATES PATENT AND TRADEMARK OFFICE

Applicant	:	Michael E. Shanahan
Application No.	:	10/600,975 Confirmation No.: 7158
Filed	:	June 20, 2003
Title	:	METHODS AND APPARATUSES FOR PROGRAMMING USER-DEFINED INFORMATION INTO ELECTRONIC DEVICES
Examiner	:	Joy Kimberly Contee
Group Art Unit	:	2686

April 5, 2006

Commissioner for Patents
P.O. Box 1450
Alexandria, VA 22213-1450

INFORMATION DISCLOSURE STATEMENT

Sir:

Pursuant to 37 C.F.R. §§ 1.56, 1.97 and 1.98, applicant hereby makes the documents listed below of record in the above-identified application.

04/06/2006 SFELEKE1 00000072 10600975
02 FC:1806 180.00 OP

Jessica M. Beamer 6/23/06

PATENT
MES/002 CON

Foreign Office Actions

TMB Canadian Office Action dated April 21, 2004 (copy included)
TMB Canadian Office Action dated December 29, 2004 (copy included)
TMB Canadian Office Action dated March 31, 2005 (copy included)
TMB Canadian Office Action dated September 28, 2005 (copy included)

Related Cases

Applicant draws the Examiner's attention to the following related cases that share a common specification with this case.

TMB U.S. Patent No. 6,496,692
TMB U.S. Patent application No. 09/518,846 (abandoned)
TMB U.S. Patent application No. 10/603,285
TMB U.S. Patent application No. 10/223,200
TMB U.S. Patent application No. 10/603,271
TMB U.S. Patent application No. 10/915,862
TMB U.S. Patent application No. 10/915,866

It is respectfully requested the Examiner fully consider these and any associated documents during the examination of this application, make them of record, and indicate his or her consideration of the documents by initialing the enclosed Citation List adjacent the citation of each document, and print them on any patent that may issue on this application. It is requested that a copy of the initialed Citation form be returned to applicant's undersigned Attorney.

Jessica M. Beamer 6/23/04

PATENT
MES/002 CON

Included is a USPTO Credit Card payment form which authorizes charges for $180.00 in payment of IDS fee pursuant to 37 C.F.R. § 1.17 (p).

Respectfully submitted,

4/5/06
Date

Scott H. Kaliko
Attorney for Applicant
Registration No. 45,786
KALIKO & YEAGER, L.L.C.
500 North Franklin Turnpike
Ramsey, NJ 07446
Direct: 201-831-0575
Fax: 201-831-0519

PTO/SB/08A (07-05)
Approved for use through 07/31/2006, OMB 0651-0031
U.S. Patent and Trademark Office; U.S. DEPARTMENT OF COMMERCE
Under the Paperwork Reduction Act of 1995, no persons are required to respond to a collection of information unless it displays a valid OMB control number.

Substitute for form 1449/PTO

INFORMATION DISCLOSURE STATEMENT BY APPLICANT

(Use as many sheets as necessary)

Sheet 1 of 1

Complete if Known	
Application Number	10/600,975
Filing Date	June 20, 2003
First Named Inventor	Michael E. Shanahan
Art Unit	2686
Examiner Name	JOY KIMBERLY CONTEE
Attorney Docket Number	MES/002 CON

U. S. PATENT DOCUMENTS

Examiner Initials*	Cite No.[1]	Document Number: Number-Kind Code[2] (if known)	Publication Date MM-DD-YYYY	Name of Patentee or Applicant of Cited Document	Pages, Columns, Lines, Where Relevant Passages or Relevant Figures Appear
		US-			
		US-			
		US-			
		US-			
		US-			
		US-			
		US-			
		US-			
		US-			
		US-			
		US-			
		US-			
		US-			
		US-			
		US-			
		US-			
		US-			
		US-			
		US-			
		US-			

FOREIGN PATENT DOCUMENTS

Examiner Initials*	Cite No.[1]	Foreign Patent Document: Country Code[3] Number[4] Kind Code[5] (if known)	Publication Date MM-DD-YYYY	Name of Patentee or Applicant of Cited Document	Pages, Columns, Lines, Where Relevant Passages Or Relevant Figures Appear	T[6]
TMB	—	CA Office Action	04-21-2004			
TMB	—	CA Office Action	12-19-2004			
TMB	—	CA Office Action	03-31-2005			
TMB	—	CA Office Action	09-28-2005			
TMB	—	Related cases cited in IDS	Various			

Examiner Signature	Jamisa M. Beamer	Date Considered	6/23/06

*EXAMINER: Initial if reference considered, whether or not citation is in conformance with MPEP 609. Draw line through citation if not in conformance and not considered. Include copy of this form with next communication to applicant. [1]Applicant's unique citation designation number (optional). [2]See Kinds Codes of USPTO Patent Documents at www.uspto.gov or MPEP 901.04. [3] Enter Office that issued the document, by the two-letter code (WIPO Standard ST.3). [4] For Japanese patent documents, the indication of the year of the reign of the Emperor must precede the serial number of the patent document. [5]Kind of document by the appropriate symbols as indicated on the document under WIPO Standard ST.16 if possible. [6] Applicant is to place a check mark here if English language Translation is attached.

This collection of information is required by 37 CFR 1.97 and 1.98. The information is required to obtain or retain a benefit by the public which is to file (and by the USPTO to process) an application. Confidentiality is governed by 35 U.S.C. 122 and 37 CFR 1.14. This collection is estimated to take 2 hours to complete, including gathering, preparing, and submitting the completed application form to the USPTO. Time will vary depending upon the individual case. Any comments on the amount of time you require to complete this form and/or suggestions for reducing this burden, should be sent to the Chief Information Officer, U.S. Patent and Trademark Office, P.O. Box 1450, Alexandria, VA 22313-1450. DO NOT SEND FEES OR COMPLETED FORMS TO THIS ADDRESS. SEND TO: Commissioner for Patents, P.O. Box 1450, Alexandria, VA 22313-1450.

If you need assistance in completing the form, call 1-800-PTO-9199 (1-800-786-9199) and select option 2.

Notice of References Cited	Application/Control No. 10/600,975	Applicant(s)/Patent Under Reexamination SHANAHAN, MICHAEL E.	
	Examiner Temica M. Beamer	Art Unit 2617	Page 1 of 1

U.S. PATENT DOCUMENTS

*		Document Number Country Code-Number-Kind Code	Date MM-YYYY	Name	Classification
*	A	US-6,496,692	12-2002	Shanahan, Michael E.	455/418
	B	US-			
	C	US-			
	D	US-			
	E	US-			
	F	US-			
	G	US-			
	H	US-			
	I	US-			
	J	US-			
	K	US-			
	L	US-			
	M	US-			

FOREIGN PATENT DOCUMENTS

*		Document Number Country Code-Number-Kind Code	Date MM-YYYY	Country	Name	Classification
	N					
	O					
	P					
	Q					
	R					
	S					
	T					

NON-PATENT DOCUMENTS

*		Include as applicable: Author, Title Date, Publisher, Edition or Volume, Pertinent Pages)
	U	
	V	
	W	
	X	

*A copy of this reference is not being furnished with this Office action. (See MPEP § 707.05(a).)
Dates in MM-YYYY format are publication dates. Classifications may be US or foreign.

Search Notes

Application/Control No.	Applicant(s)/Patent under Reexamination	
10/600,975	SHANAHAN, MICHAEL E.	
Examiner	**Art Unit**	
Temica M. Beamer	2617	

SEARCHED			
Class	Subclass	Date	Examiner
455	414.1	6/23/2006	TMB
455	415	6/23/2006	TMB
455	418	6/23/2006	TMB
455	419	6/23/2006	TMB
455	567	6/23/2006	TMB
455	566	6/23/2006	TMB

INTERFERENCE SEARCHED			
Class	Subclass	Date	Examiner

SEARCH NOTES (INCLUDING SEARCH STRATEGY)		
	DATE	EXMR
WEST text search	6/23/2006	TMB

Index of Claims

Application/Control No.	Applicant(s)/Patent under Reexamination
10/600,975	SHANAHAN, MICHAEL E.
Examiner	**Art Unit**
Temica M. Beamer	2617

√	Rejected	–	(Through numeral) Cancelled	N	Non-Elected	A	Appeal
=	Allowed	+	Restricted	I	Interference	O	Objected

Claim		Date	Claim		Date	Claim		Date
Final	Original	6d 03/0	Final	Original	6d 03/0	Final	Original	
	1			51			101	
	2			52			102	
	3			53			103	
	4			54			104	
	5			55			105	
	6			56			106	
	7			57			107	
	8			58			108	
	9			59			109	
	10			60			110	
	11			61			111	
	12			62			112	
	13			63			113	
	14			64			114	
	15			65			115	
	16			66			116	
	17			67			117	
	18			68			118	
	19			69			119	
	20			70			120	
	21			71			121	
	22			72			122	
	23			73			123	
	24			74			124	
	25			75			125	
	26			76			126	
	27			77			127	
	28			78			128	
	29			79			129	
	30			80			130	
	31			81			131	
	32			82			132	
	33			83			133	
	34			84			134	
	35			85			135	
	36			86			136	
	37			87			137	
	38			88			138	
	39			89			139	
	40			90			140	
	41			91			141	
	42			92			142	
	43			93			143	
	44			94			144	
	45			95			145	
	46			96			146	
	47			97			147	
	48			98			148	
	49			99			149	
	50			100			150	

WEST Search History

Hide Items | Restore | Clear | Cancel

DATE: Friday, June 23, 2006

Hide?	Set Name	Query	Hit Count
	DB=PGPB,USPT; PLUR=YES; OP=OR		
☐	L28	ringtone and L27	18
☐	L27	(wireless or cellular) and L26	928
☐	L26	l23 and (phone or telephone) and download$3	1204
☐	L25	(video or audio) near5 download$3 and L24	21
☐	L24	l21 and L23	143
☐	L23	video near3 clip with audio	3512
☐	L22	l20 and L21	293
☐	L21	455/$.ccls.	76979
☐	L20	video near9 audio same download$3	4877
☐	L19	455/$.ccls. and L18	24
☐	L18	video near7 audio and l14	148
☐	L17	ringtone and L16	1
☐	L16	download$3 near8 (video or image) and L15	21
☐	L15	455/$.ccls. and L14	70
☐	L14	incoming adj call near8 (image or video) and (phone or telephone) same (cellular or wireless)	248
☐	L13	video near6 call and l6	12
☐	L12	caller near3 id$12 same video and L11	44
☐	L11	download$3 near5 video and (phone or telephone) near10 (cellular or wireless)	1379
☐	L10	l6 and L9	1
☐	L9	download$3 near5 ringtone and (phone or telephone) near10 (cellular or wireless)	60
☐	L8	l6 and L7	19
☐	L7	(image or video or picture) near8 display$3 same (incoming or receiv$3) near4 call	1203
☐	L6	455/415.ccls.	455
☐	L5	(sample or preview) and l3	9
☐	L4	video near6 brows$3 same select$3 and l3	1
☐	L3	455/$.ccls. and L2	46
☐	L2	video near5 (file or clip) same download$3 same (phone or telephone) and (cellular or wireless)	265

☐	L1	6385305.pn.	1

END OF SEARCH HISTORY

RECEIVED
CENTRAL FAX CENTER

APR - 5 2006

PATENT
MES/002 CON

IN THE UNITED STATES PATENT AND TRADEMARK OFFICE

Applicant	:	Michael E. Shanahan
Application No.	:	10/600,975 Confirmation No.: 7158
Filed	:	June 20, 2003
Title	:	METHODS AND APPARATUSES FOR PROGRAMMING USER-DEFINED INFORMATION INTO ELECTRONIC DEVICES
Examiner	:	Joy Kimberly Contee
Group Art Unit	:	2686

April 5, 2006

Mail Stop Amendment
Commissioner for Patents
P.O. Box 1450
Alexandria, VA 22313-1450

REPLY TO OFFICE ACTION

Sir:

In response to the Office Action dated October 6, 2005:

Remarks begin on page 2 of this paper.

04/06/2006 SFELEKE1 00000072 10600975
01 FC:2253 510.00 OP

PATENT
MES/002 CON

REMARKS

I. Petition Under 37 C.F.R. § 1.136(a)

Pursuant to 37 C.F.R. § 1.136(a), applicant hereby petitions for a three-month extension of the shortened statutory period set for reply to the Office Action dated October 6, 2005. Payment in the amount of $510.00 of the fee set forth in 37 C.F.R. § 1.17(a)(3) may be charged to the credit card set forth in the enclosed credit card payment form.

II. Introduction

Claim 1 is cancelled without prejudice.

Claims 2-82 are pending in the application.

Claims 2-82 are rejected under 35 U.S.C. § 102(b) as being anticipated by Gerszberg et al., U.S. patent 6,385,305 (hereinafter "Gerszberg").

Consideration and allowance of this application in light of the amendments above and the following remarks is respectfully requested.

IV. Applicant's Reply to the Rejection Under 35 U.S.C. § 102(b)

Claims 2-82 are rejected under 35 U.S.C. § 102(b) as being anticipated by Gerszberg. Applicant respectfully traverses in view of the following remarks.

One aspect of applicant's claimed invention is concerned with a wireless telephone, such as a cellular telephone, that may be customized by programming a video file into the wireless telephone for use as an indicia of an incoming communication. This may be thought of as a wireless telephone that allows a user to customize the wireless telephone by selecting and programming video into the wireless telephone that plays when a telephone call (or other communication) is incoming to the wireless telephone. Thus, when a communication is incident to the wireless telephone, the user of the wireless telephone may see and/or hear the selected video playing and may be thus alerted to the incoming communication.

The claimed wireless telephone has the ability, among other things, to connect to a remote database(s) of video and allow the user to browse lists of video files in the remote database(s), select a particular video file and optionally review a selected video using a speaker and processing circuitry prior to downloading the video file

into a programmable memory in the wireless telephone (*e.g.*, a preview feature). This allows the user to confirm the selected video is correct and/or acceptable or meets expectations, etc. Thus, one aspect of applicant's claimed invention is concerned with a customization of wireless telephone by allowing the review and selection of a video file that is played subsequently when receiving an incoming call.

In contrast, Gerszberg fails to show or suggest these features anywhere. Rather, Gerszberg is merely concerned with a toolkit for providing multimedia greeting or "announcement" messages for automated telephone answering machines (see Gerszberg, Abstract, column 1, lines 5-8, column 2, lines 3-6 and 54-59, column 8, lines 1-15, the claims, *etc.*). The greeting messages and answering machine described in Gerszberg are of a conventional type wherein the greeting message is played *after* a caller fails to reach a called party. When the called party is not reached, the caller hears and/or sees the greeting and may confirm the correct party was called and in certain instances, may be provided with the opportunity to leave a message for the called party on the answering machine (see Gerszberg, FIGS. 6-9, 13 and associated description).

Thus, in the answering machine of Gerzsberg, greeting messages are played during an automated answering sequence which begins *after* a call has failed to reach the intended party rather than as an indicia of an incoming call (*e.g.*, prior to the call being answered) as specified in applicant's claims. For example, in Gerzsberg, the answering sequence will not play if the called party answers the incoming call prior to the exceeding the triggering interval of the answering machine. In contrast, in applicant's claimed invention, the selected video plays when the call is inbound, prior to receipt, to the alert the wireless telephone user of the incoming call. This is not shown or suggested by Gerszberg.

Furthermore, the greetings described in Gerszberg are sent to and played on the remote video phone for the benefit of the *calling party* and not the video phone to which the selected video has been downloaded as further specified in applicant's claims (see, e.g., Gerzberg, column 9, lines 55-60, column 10, lines 15-32, column 11, lines 58-66 *etc.*). Accordingly, applicant respectfully submits that claims 2-82 are allowable over Gerzsberg.

Moreover, applicant respectfully points out that Gerszberg fails to show or suggest a wireless telephone capable of performing the features as specified in the

instant claims. For example, FIGS. 1 and 2 of Gerzsberg show a complicated hardwired communications network, a portion of which includes video phone 130 (column 3, lines 29-53). FIG. 2 shows video phone 130 connected only by hardwired communications links (Ethernet link 119 and IEEE 1394 firewire link 112). Gerszberg explains that the hardwired video phone may include a corded or wireless handset 144 for audio communication (see column 6, lines 25-30 and FIG. 3A, reference number 144). However, handset 144 is merely a part of video phone 130 and incapable of performing any video function including those specified in applicant's claims. Nowhere in Gerzsberg is a wireless phone with video capabilities shown or suggested.

Other Patentable Distinctions

In addition to the reasons above, applicant respectfully submits that at least several other patentable distinctions exist in the additional pending dependent claims including means to prevent the unauthorized distribution of the downloaded video files used as an indicia of an incoming communication, optionally modifying selected video files before programming into the wireless telephone the use of polyphonic audio files and video files including the various formats specified as well as other

patentable features set forth in the claims that are not deemed necessary to discuss here.

Accordingly, based on the above, applicant respectfully requests that the rejections under 35 U.S.C. § 102(b) be withdrawn.

VI. Conclusion

For at least the above reasons, claims 2-82 are patentable over the references of record. Thus, applicant respectfully requests that the Examiner withdraw the rejections and allow the pending claims. To expedite prosecution of this application to allowance, the examiner is invited to call the applicant's undersigned representative to discuss any issues relating to this application.

Respectfully submitted,

Dated: 4/5/06

Scott H. Kaliko
Attorney for Applicant
Registration No. 45,786
KALIKO & YEAGER, L.L.C.
500 North Franklin Turnpike
Ramsey, NJ 07446
Direct: 201-831-0575
Fax: 201-831-0519

RECEIVED
CENTRAL FAX CENTER

APR - 5 2006

PATENT
MES/002 CON

IN THE UNITED STATES PATENT AND TRADEMARK OFFICE

Applicant	:	Michael E. Shanahan
Application No.	:	10/600,975 Confirmation No.: 7158
Filed	:	June 20, 2003
Title	:	METHODS AND APPARATUSES FOR PROGRAMMING USER-DEFINED INFORMATION INTO ELECTRONIC DEVICES
Examiner	:	Joy Kimberly Contee
Group Art Unit	:	2686

April 5, 2006

Commissioner for Patents
P.O. Box 1450
Alexandria, VA 22213-1450

INFORMATION DISCLOSURE STATEMENT

Sir:

Pursuant to 37 C.F.R. §§ 1.56, 1.97 and 1.98, applicant hereby makes the documents listed below of record in the above-identified application.

04/06/2006 SFELEKE1 00000072 10600975
02 FC:1806 180.00 OP

PATENT
MES/002 CON

Foreign Office Actions

Canadian Office Action dated April 21, 2004 (copy included)

Canadian Office Action dated December 29, 2004 (copy included)

Canadian Office Action dated March 31, 2005 (copy included)

Canadian Office Action dated September 28, 2005 (copy included)

Related Cases

Applicant draws the Examiner's attention to the following related cases that share a common specification with this case.

U.S. Patent No. 6,496,692

U.S. Patent application No. 09/518,846 (abandoned)

U.S. Patent application No. 10/603,285

U.S. Patent application No. 10/223,200

U.S. Patent application No. 10/603,271

U.S. Patent application No. 10/915,862

U.S. Patent application No. 10/915,866

It is respectfully requested the Examiner fully consider these and any associated documents during the examination of this application, make them of record, and indicate his or her consideration of the documents by initialing the enclosed Citation List adjacent the citation of each document, and print them on any patent that may issue on this application. It is requested that a copy of the initialed Citation form be returned to applicant's undersigned Attorney.

PATENT
MES/002 CON

Included is a USPTO Credit Card payment form which authorizes charges for $180.00 in payment of IDS fee pursuant to 37 C.F.R. § 1.17 (p).

Respectfully submitted,

4/5/06
Date

Scott H. Kaliko
Attorney for Applicant
Registration No. 45,786
KALIKO & YEAGER, L.L.C.
500 North Franklin Turnpike
Ramsey, NJ 07446
Direct: 201-831-0575
Fax: 201-831-0519

PTO/SB/08A (07-05)
Approved for use through 07/31/2006. OMB 0651-0031
U.S. Patent and Trademark Office; U.S. DEPARTMENT OF COMMERCE
Under the Paperwork Reduction Act of 1995, no persons are required to respond to a collection of information unless it displays a valid OMB control number.

Substitute for form 1449/PTO

INFORMATION DISCLOSURE STATEMENT BY APPLICANT

(Use as many sheets as necessary)

Sheet 1 of 1

Complete if Known	
Application Number	10/600,975
Filing Date	June 20, 2003
First Named Inventor	Michael E. Shanahan
Art Unit	2686
Examiner Name	JOY KIMBERLY CONTEE
Attorney Docket Number	MES/002 CON

U. S. PATENT DOCUMENTS

Examiner Initials*	Cite No.[1]	Document Number Number-Kind Code[2] (if known)	Publication Date MM-DD-YYYY	Name of Patentee or Applicant of Cited Document	Pages, Columns, Lines, Where Relevant Passages or Relevant Figures Appear
		US-			
		US-			
		US-			
		US-			
		US-			
		US-			
		US-			
		US-			
		US-			
		US-			
		US-			
		US-			
		US-			
		US-			
		US-			
		US-			
		US-			
		US-			
		US-			
		US-			

FOREIGN PATENT DOCUMENTS

Examiner Initials*	Cite No.[1]	Foreign Patent Document Country Code[3] Number[4] Kind Code[5] (if known)	Publication Date MM-DD-YYYY	Name of Patentee or Applicant of Cited Document	Pages, Columns, Lines, Where Relevant Passages Or Relevant Figures Appear	T[6]
		CA Office Action	04-21-2004			
		CA Office Action	12-19-2004			
		CA Office Action	03-31-2005			
		CA Office Action	09-28-2005			
		Related cases cited in IDS	Various			

Examiner Signature		Date Considered	

*EXAMINER: Initial if reference considered, whether or not citation is in conformance with MPEP 609. Draw line through citation if not in conformance and not considered. Include copy of this form with next communication to applicant. [1] Applicant's unique citation designation number (optional). [2] See Kinds Codes of USPTO Patent Documents at www.uspto.gov or MPEP 901.04. [3] Enter Office that issued the document, by the two-letter code (WIPO Standard ST.3). [4] For Japanese patent documents, the indication of the year of the reign of the Emperor must precede the serial number of the patent document. [5] Kind of document by the appropriate symbols as indicated on the document under WIPO Standard ST.16 if possible. [6] Applicant is to place a check mark here if English language Translation is attached.

This collection of information is required by 37 CFR 1.97 and 1.98. The information is required to obtain or retain a benefit by the public which is to file (and by the USPTO to process) an application. Confidentiality is governed by 35 U.S.C. 122 and 37 CFR 1.14. This collection is estimated to take 2 hours to complete, including gathering, preparing, and submitting the completed application form to the USPTO. Time will vary depending upon the individual case. Any comments on the amount of time you require to complete this form and/or suggestions for reducing this burden, should be sent to the Chief Information Officer, U.S. Patent and Trademark Office, P.O. Box 1450, Alexandria, VA 22313-1450. DO NOT SEND FEES OR COMPLETED FORMS TO THIS ADDRESS. SEND TO: **Commissioner for Patents, P.O. Box 1450, Alexandria, VA 22313-1450.**

If you need assistance in completing the form, call 1-800-PTO-9199 (1-800-786-9199) and select option 2.

Office de la propriété intellectuelle du Canada
Un organisme d'Industrie Canada
www.opic.gc.ca

Ca dian Int. ctual Property Office
An Agency of Industry Canada
www.cipo.gc.ca

RECEIVED
CENTRAL FAX CENTER
APR - 5 2006

April 21, 2004

SMART & BIGGAR
P.O. Box 2999
Station D
OTTAWA Ontario
K1P 5Y6

Application No.	:	**2,436,872**
Owner	:	SHANAHAN, MICHAEL E.
Title	:	**METHODS AND APPARATUSES FOR PROGRAMMING USER-DEFINED INFORMATION INTO ELECTRONIC DEVICES –**
Classification	:	H04M-1/247
Your File No.	:	**50320-1**
Examiner	:	S.Chhim

YOU ARE HEREBY NOTIFIED OF A REQUISITION BY THE EXAMINER IN ACCORDANCE WITH SUBSECTION 30(2) OF THE *PATENT RULES*. IN ORDER TO AVOID ABANDONMENT UNDER PARAGRAPH 73(1)(A) OF THE *PATENT ACT*, A WRITTEN REPLY MUST BE RECEIVED WITHIN 6 MONTHS AFTER THE ABOVE DATE.

This application has been examined taking into account the:

Description, as originally filed;

Claims, as originally filed;

Drawings, as originally filed.

This application has been examined taking into account applicant's correspondence received in this office on January 22, 2004.

The number of claims in this application is 239.

The examiner has identified the following defects in the application:

The claims are directed to the following categories of subject matter:

Group A - Claims 1-182 are directed to a wireless telephone;
Group B - Claims 183-200 are directed to a system for providing a video file;
Group C - Claims 201-209 and 230-239 are directed to an Internet site; and

PAGE 17/26 * RCVD AT 4/5/2006 1:28:06 PM [Eastern Daylight Time] * SVR:USPTO-EFXRF-5/14 * DNIS:2738300 * CSID:2018310519 * DURATION (mm-ss):06-50

Group D - 210-229 are directed to a system for providing a polyphonic audio file.

The claims must be limited to one invention only as set out in Section 36 of the *Patent Act*.

Please note that the definition of when an application does not claim more than one invention found in Section 36 of the *Patent Act*, is not different from or additional to PCT Rule 13.1. Therefore the requirements under section 36 of the *Patent Act* are compliant with Article 27(1) of the PCT.

A search of the prior art has revealed the following:

Reference Applied:

European Patent Office Application 851,649	July 1, 1998	H04M-1/72	Armanto et al.

Armanto et al. disclose a programming of a telephone's ringing tone.

Claims 10, 44, 105, 141 and 159 do not comply with Section 28.3 of the *Patent Act*. The subject matter of these claims would have been obvious on the claim date to a person skilled in the art or science to which they pertain having regard to Armanto et al..

These claims are obvious, because Armanto et al. teaches a method, wherein a ringing tone is stored in a memory and reproduced by means of sound reproduction means as a response to an incoming call, characterised in that the ringing tone is modified into characters and sent to the telephone as characters with a ringing tone identifier. The features defined in the above claims are similar to those claimed in the Armanto et al.'s reference, namely the step of providing the user-defined audio file, and the step of enabling a user to program a portion of the audio file into the telephone.

Therefore, these claims do not comply with Section 28.3 of the Patent Act.

Claims 201-209 and 230-239 are directed to non-statutory subject matter, and are outside the definition of invention in Section 2 of the Patent Act, because they claim an Internet site using obviously a program software. A database of video or audio files is not a feature of an apparatus claim.

Claims 2, 12, 64, 107, 117, 128, 161 and 207 are ambiguous and do not comply with Subsection 27(4) of the Patent Act. The words "MPEG, MP3, WAV, PCM, MDI, JPEG, DVD, AVI and GIF" should be fully spelled, and not in their abbreviated forms, when using in these dependent and independent claims.

The subject matter of this application is outside the definition of invention in Section 2 of the Patent Act, because it is merely directed to a scheme of using a program software.

In accordance with Subsection 81(2) of the Patent Rules, all documents referred to in the description of an application must be available to the public. Reference to the document on page 1, line 8 must be deleted or replaced by its corresponding patent or publication number.

Applicant is requested to replace the present drawings by formal drawings.

In view of the foregoing defects, the applicant is requisitioned, under Subsection 30(2) of the Patent Rules, to amend the application in order to comply with the Patent Act and the Patent Rules or to provide arguments as to why the application does comply.

Under Section 29 of the *Patent Rules*, applicant is requisitioned to provide an identification of any prior art cited in respect of the United States and European Patent Office applications describing the same invention on behalf of the applicant, or on behalf of any other person claiming under an inventor named in the present application, and the patent numbers, if granted. Amendment to avoid references cited abroad may expedite the prosecution. In accordance with Subsection 29(3) of the *Patent Rules*, if the particulars are not available to the applicant, the reason why must be stated.

S.Chhim
Patent Examiner
(819) 997-2238

Office de la propriété intellectuelle du Canada
Un organisme d'Industrie Canada
www.opic.gc.ca

Canadian Intellectual Property Office
An Agency of Industry Canada
www.cipo.gc.ca

RECEIVED
CENTRAL FAX CENTER

APR - 5 2006

RECEIVED
2005 JAN -5 A 8:07

December 29, 2004

SMART & BIGGAR
P.O. Box 2999
Station D
OTTAWA Ontario
K1P 5Y6

Application No.	:	**2,436,872**
Owner	:	TWENTY YEAR INNOVATIONS, INC.
Title	:	**METHODS AND APPARATUSES FOR PROGRAMMING USER-DEFINED INFORMATION INTO ELECTRONIC DEVICES**
Classification	:	H04M-1/247
Your File No.	:	**50320-1**
Examiner	:	S.Chhim

YOU ARE HEREBY NOTIFIED OF :

- A REQUISITION BY THE EXAMINER IN ACCORDANCE WITH SUBSECTION 30(2) OF THE *PATENT RULES*;
- A REQUISITION BY THE EXAMINER IN ACCORDANCE WITH SECTION 29 OF THE *PATENT RULES*.

IN ORDER TO AVOID **MULTIPLE ABANDONMENTS** UNDER PARAGRAPH 73(1)(A) OF THE *PATENT ACT*, A WRITTEN REPLY **TO EACH REQUISITION** MUST BE RECEIVED WITHIN 6 MONTHS AFTER THE ABOVE DATE.

This application has been examined taking into account applicant's correspondence received in this office on October 21, 2004.

The number of claims in this application is 171.

The examiner has identified the following defects in the application:

The claims are directed to a plurality of alleged inventions as follows:

Group A - Claims 1-50 and 53-84 are directed to a telephone having means for optionally reviewing the selected audio file;
Group B - Claims 51-52 are directed to a telephone having means for preventing the authorized distribution of a selected audio file;
Group C - Claims 85-147 and 150-171 are directed to a telephone having means for browsing video files; and
Group D - Claims 148-149 are directed to a telephone having means for preventing the unthorized distribution of a seleceted video file.

The claims must be limited to one invention only as set out in section 36 of the *Patent Act*.

In view of the above, a search of the prior art has been limited to the subject matter in claims 1-50 and 53-84.

A search of the prior art has thus far failed to reveal any pertinent references.

Claims of the corresponding issued United States patent No. 6,496,692 do not have the same scope of claims 1-50 and 53-84 in this Canadian application.

In view of the foregoing defects, the applicant is requisitioned, under subsection 30(2) of the *Patent Rules*, to amend the application in order to comply with the *Patent Act* and the *Patent Rules* or to provide arguments as to why the application does comply.

Under subsection 29(1) of the *Patent Rules*, the applicant is requisitioned to provide an identification of any prior art cited in respect of the United States Patent and Trademark Office, and European Patent Office applications describing the same invention on behalf of the applicant or on behalf of any other person claiming under an inventor named in the present application, and the patent numbers, if granted. Amendment to avoid references cited abroad may expedite the prosecution. In accordance with subsection 29(3) of the *Patent Rules*, if the particulars are not available to the applicant, the reason must be stated.

S.Chhim
Patent Examiner
(819) 997-2238

Office de la propriété intellectuelle du Canada
Un organisme d'Industrie Canada
www.opic.gc.ca

Canadian Intellectual Property Office
An Agency of Industry Canada
www.cipo.gc.ca

March 31, 2005

SMART & BIGGAR
P.O. Box 2999
Station D
OTTAWA Ontario
K1P 5Y6

Application No.	:	**2,492,727**
Owner	:	TWENTY YEAR INNOVATIONS, INC.
Title	:	**METHODS AND APPARATUSES FOR PROGRAMMING USER-DEFINED INFORMATION INTO ELECTRONIC DEVICES**
Classification	:	H04M-3/42
Your File No.	:	**51170-1D**
Examiner	:	Kristy Hyam

YOU ARE HEREBY NOTIFIED OF :

- A REQUISITION BY THE EXAMINER IN ACCORDANCE WITH SUBSECTION 30(2) OF THE *PATENT RULES*;
- A REQUISITION BY THE EXAMINER IN ACCORDANCE WITH SECTION 29 OF THE *PATENT RULES*.

IN ORDER TO AVOID **MULTIPLE ABANDONMENTS** UNDER PARAGRAPH 73(1)(A) OF THE *PATENT ACT*, A WRITTEN REPLY **TO EACH REQUISITION** MUST BE RECEIVED WITHIN 6 MONTHS AFTER THE ABOVE DATE.

This application has been examined as originally filed.

The number of claims in this application is 57.

The examiner has identified the following defects in the application:

The search of the prior art has revealed the following:

References Applied:

PCT Application			
98/11487	Mar. 19, 1998	G06F 13/00	Katz et al.
United States Patent			
5,694,455	Dec. 2, 1997	H04M 11/00	Goodman

Katz et al. disclose a method and system of downloading digital information to a mobile digital information playback device.

Canada

Goodman discloses a method and system for allowing a mobile user to select and download audio programs.

Obviousness

Claims 1-57 do not comply with section 28.3 of the *Patent Act*. The subject matter of claims 1-27 would have been obvious on the claim date to a person skilled in the art or science to which they pertain having regard to Katz et al., and the subject matter of claims 28-57 would have been obvious on the claim date to a person skilled in the art or science to which they pertain having regard to Katz et al. or Goodman.

Katz et al. discloses a system for providing digital information to a mobile device. This digital information can be either video or audio information. The user can browse the digital information available on a library server and select what to download. Authentication and encryption are provided to prevent the unauthorized downloading and copying of protected works. Goodman discloses a method and system specifically for downloading audio files to a mobile user terminal, as in claims 28-57. Thus, claims 1-57 are therefore obvious in view of the applied references.

Lack of Support

Claims 19-27 and 48-57 do not comply with section 84 of the *Patent Rules* because there is no support in the present description for the subject matter of these claims. Specifically, an Internet site with all of the claimed functionality is not present in the present description.

Claims 1-57 do not comply with section 84 of the *Patent Rules*. The description indicates on page 3, lines 7-28 and page 5, line 8 to page 6, line 3 that the communication links between the programmer, the source, and the device materially affects the way the invention works, and is therefore essential. In order to provide support for the utility as disclosed in the description, this feature has to be incorporated in these claims.

Description Informalities

On page 7, line 22, the term 'processor 40" should be changed to either "processor 34" or "SPC 40".

In view of the foregoing defects, the applicant is requisitioned, under subsection 30(2) of the *Patent Rules*, to amend the application in order to comply with the *Patent Act* and the *Patent Rules* or to provide arguments as to why the application does comply.

Under subsection 29(1) of the *Patent Rules*, the applicant is requisitioned to provide an identification of any prior art cited in respect of the United States Patent and Trademark Office application describing the same invention on behalf of the applicant or on behalf of any other person claiming under an inventor named in the present application, and the patent number, if granted. Amendment to avoid references cited abroad may expedite the prosecution. In accordance with subsection 29(3) of the *Patent Rules*, if the particulars are not available to the applicant, the reason must be stated.

Kristy Hyam
Patent Examiner
(819) 934-2673
2492727A.kdh

Office de la propriété intellectuelle du Canada
Un organisme d'Industrie Canada
www.opic.gc.ca

Canadian Intellectual Property Office
An Agency of Industry Canada
www.cipo.gc.ca

September 28, 2005

SMART & BIGGAR
P.O. Box 2999
Station D
OTTAWA Ontario
K1P 5Y6

Application No.	:	**2,436,872**
Owner	:	TWENTY YEAR INNOVATIONS, INC.
Title	:	**METHODS AND APPARATUSES FOR PROGRAMMING USER-DEFINED INFORMATION INTO ELECTRONIC DEVICES**
Classification	:	H04M-1/247
Your File No.	:	**~~50320-1~~**
Examiner	:	S.Chhim

YOU ARE HEREBY NOTIFIED OF :
- A REQUISITION BY THE EXAMINER **IN** ACCORDANCE WITH SUBSECTION 30(2) OF THE *PATENT RULES*;
- A REQUISITION BY THE EXAMINER IN ACCORDANCE WITH SECTION 29 OF THE *PATENT RULES*.

IN ORDER TO AVOID **MULTIPLE ABANDONMENTS** UNDER PARAGRAPH 73(1)(A) OF THE *PATENT ACT*, A WRITTEN REPLY **TO EACH REQUISITION** MUST BE RECEIVED WITHIN **6** MONTHS AFTER THE ABOVE DATE.

This application has been examined taking into account applicant's correspondence received in this office on June 28, 2005.

The number of claims in this application is 171.

The examiner has identified the following defects in the application:

The search of the prior art has revealed the following:

Reference Applied:

Korean Patent document			
kr99024210	March 25, 1999	H04B-1/40	Jaehan

Jaehan disclose a system for restoring and playing back of digital data on wireless mobile terminal.

Claims 10,51, 94 and 130 do not comply with section 28.3 of the *Patent Act*. The subject matter of these claims would have been obvious on the claim date to a person skilled in the art or science to which they pertain having regard to Jaehan.

Claims 10, 51, 94 and 130 are obvious, because Jaehan teaches a system having a function of storing digital audio data encoded by MP3 or AAC into the memory and a function of decoding the data to decoded original audio signal that are added to a wireless mobile terminal, whereby, using various methods, a first method is PC interfacing method to connect with Internet, a second method is requesting method of the digital audio data encoded by MP3 or AAC via the public communication network or data network that is wire or wireless channel, and a third method is passive receiving method of the digital audio data transmitted from station, that can store the digital audio data encoded by MP3 or AAC into a memory, decoded the digital audio data stored in the memory to decoded original audio signal. The system is implemented with convenient mobile services of telephone and audio on demand (AOD) or music on demand (MOD), with a main function of the system, in using a wireless mobile terminal, by an additional function in storing and playback of the digital audio data encoded by MP3 or AAC. Features of claims 10, 51, 94 and 130 are similar to those defined in the specifications of Jaehan's reference.

Therefore, claims 10, 51, 94 and 130 do not comply with Section 28.3 of the Patent Act.

In view of the foregoing defects, the applicant is requisitioned, under subsection 30(2) of the *Patent Rules*, to amend the application in order to comply with the *Patent Act* and the *Patent Rules* or to provide arguments as to why the application does comply.

Section 29 of the Patent Rules requisition

Under section 29 of the *Patent Rules*, the applicant is requisitioned to provide:

- identification of any prior art cited in respect of the European Patent Office application describing the same invention on behalf of the applicant or on behalf of any other person claiming under an inventor named in the present application, and the patent number, if granted, subsequent to the International Search Report under paragraph 29(1)(*a*) of the *Patent Rules*.

To satisfy this requisition, applicant should provide all the preceding information or documents, or provide in accordance with subsection 29(3) of the *Patent Rules* a statement of reasons why any information or document is not available or known.

S.Chhim
Patent Examiner
(819) 997-2238

KALIKO & YEAGER
ATTORNEYS AT LAW
A LIMITED LIABILITY CORPORATION

500 North Franklin Turnpike, Ramsey, NJ 07446
(201) 831-0575 Main Tel
(201) 831-0519 Main Fax

RECEIVED
CENTRAL FAX CENTER
APR - 5 2006

FACSIMILE TRANSMITTAL SHEET

TO: Commissioner for Patents	FROM: Scott H. Kaliko, Esq. SENDER'S FAX NUMBER: 201-831-0519 SENDER'S TELEPHONE NUMBER: 201-831-0575
COMPANY: United States Patent & Trademark Office	DATE: APRIL 5, 2006
RECIPIENT'S FAX NUMBER: 571-273-8300	TOTAL NO. OF PAGES INCLUDING COVER: 26
RECIPIENT'S TELEPHONE NUMBER:	CLIENT / MATTER:
RE: Application No. 10/600,975	YOUR REFERENCE NUMBER: MES/002 CON

X URGENT ☐ FOR REVIEW ☐ PLEASE COMMENT X PLEASE REPLY ☐ PLEASE RECYCLE

NOTES/COMMENTS:

Please confirm receipt of this fax and the below-identified attached parts.

1. Transmittal Form/Certificate of Transmission;
2. 2006 Fee transmittal (2 Copies);
3. Credit Card payment Form in the amount of $690.00;
4. Reply to Office Action (7 Pages);
5. IDS (3 pages);
6. Form 1449 (1page); and
7. Cited References 1(0 pages).

CONFIDENTIALITY NOTICE

The information contained in this facsimile message is privileged and confidential and is intended only for the use of the individual(s) and/or entity(ies) named above. If you are not the intended recipient, you are hereby notified that any unauthorized disclosure, copying, distribution or taking of any action in reliance on the contents of the information contained herein is strictly prohibited and review by any individual other than the intended recipient shall not constitute a waiver of the attorney-client privilege. If you have received this transmission in error, please immediately notify us by telephone. Thank you.

CENTRAL FAX CENTER

APR - 5 2006

PTO/SB/21 (09-04)
Approved for use through 07/31/2006. OMB 0651-0031
U.S. Patent and Trademark Office; U.S. DEPARTMENT OF COMMERCE

Under the Paperwork Reduction Act of 1995, no persons are required to respond to a collection of information unless it displays a valid OMB control number.

TRANSMITTAL FORM

(to be used for all correspondence after initial filing)

Total Number of Pages In This Submission: 25

Application Number	10/600,975
Filing Date	JUNE 20, 2003
First Named Inventor	MICHAEL E. SHANAHAN
Art Unit	2686
Examiner Name	JOY KIMBERLY CONTEE
Attorney Docket Number	MES/002 CON

ENCLOSURES (Check all that apply)

- [x] Fee Transmittal Form
  - [ ] Fee Attached
- [ ] Amendment/Reply
  - [ ] After Final
  - [ ] Affidavits/declaration(s)
- [x] Extension of Time Request
- [ ] Express Abandonment Request
- [x] Information Disclosure Statement
- [ ] Certified Copy of Priority Document(s)
- [ ] Reply to Missing Parts/ Incomplete Application
  - [ ] Reply to Missing Parts under 37 CFR 1.52 or 1.53
- [ ] Drawing(s)
- [ ] Licensing-related Papers
- [x] Petition
- [ ] Petition to Convert to a Provisional Application
- [ ] Power of Attorney, Revocation Change of Correspondence Address
- [ ] Terminal Disclaimer
- [ ] Request for Refund
- [ ] CD, Number of CD(s) _____
  - [ ] Landscape Table on CD
- [ ] After Allowance Communication to TC
- [ ] Appeal Communication to Board of Appeals and Interferences
- [ ] Appeal Communication to TC (Appeal Notice, Brief, Reply Brief)
- [ ] Proprietary Information
- [ ] Status Letter
- [x] Other Enclosure(s) (please identify below):

Remarks

1. Credit Card Payment Form;
2. Reply to Office Action that Includes Petition for Extension of Time;
3. IDS;
4. Form 1449; and
5. References (4 Canadian Office Actions).

SIGNATURE OF APPLICANT, ATTORNEY, OR AGENT

Firm Name	KALIKO & YEAGER, LLC		
Signature			
Printed name	SCOTT H. KALIKO, ESQ.		
Date	APRIL 5, 2006	Reg. No.	45,786

CERTIFICATE OF TRANSMISSION/MAILING

I hereby certify that this correspondence is being facsimile transmitted to the USPTO or deposited with the United States Postal Service with sufficient postage as first class mail in an envelope addressed to: Commissioner for Patents, P.O. Box 1450, Alexandria, VA 22313-1450 on the date shown below:

Signature			
Typed or printed name	SCOTT H. KALIKO, ESQ.	Date	APRIL 5, 2006

This collection of information is required by 37 CFR 1.5. The information is required to obtain or retain a benefit by the public which is to file (and by the USPTO to process) an application. Confidentiality is governed by 35 U.S.C. 122 and 37 CFR 1.11 and1.14. This collection is estimated to 2 hours to complete, including gathering, preparing, and submitting the completed application form to the USPTO. Time will vary depending upon the individual case. Any comments on the amount of time you require to complete this form and/or suggestions for reducing this burden, should be sent to the Chief Information Officer, U.S. Patent and Trademark Office, U.S. Department of Commerce, P.O. Box 1450, Alexandria, VA 22313-1450. DO NOT SEND FEES OR COMPLETED FORMS TO THIS ADDRESS. SEND TO: **Commissioner for Patents, P.O. Box 1450, Alexandria, VA 22313-1450.**

If you need assistance in completing the form, call 1-800-PTO-9199 and select option 2.

CENTRAL FAX CENTER

APR - 5 2006

PTO/SB/17 (01-06)
Approved for use through 07/31/2006. OMB 0651-0032
U.S. Patent and Trademark Office; U.S. DEPARTMENT OF COMMERCE

Under the Paperwork Reduction Act of 1995, no persons are required to respond to a collection of information unless it displays a valid OMB control number

Fees pursuant to the Consolidated Appropriations Act, 2005 (H.R. 4818).

FEE TRANSMITTAL
For FY 2006

☑ Applicant claims small entity status. See 37 CFR 1.27

TOTAL AMOUNT OF PAYMENT ($) 690.00

Complete if Known	
Application Number	10/600,975
Filing Date	JUNE 20, 2003
First Named Inventor	MICHAEL E. SHANAHAN
Examiner Name	JOY KIMBERLY CONTEE
Art Unit	2686
Attorney Docket No.	MES/002 CON

METHOD OF PAYMENT (check all that apply)

☐ Check ☑ Credit Card ☐ Money Order ☐ None ☐ Other (please identify): _____

☐ Deposit Account Deposit Account Number: _____ Deposit Account Name: _____

For the above-identified deposit account, the Director is hereby authorized to: (check all that apply)

☑ Charge fee(s) indicated below ☐ Charge fee(s) indicated below, except for the filing fee

☑ Charge any additional fee(s) or underpayments of fee(s) under 37 CFR 1.16 and 1.17 ☐ Credit any overpayments

WARNING: Information on this form may become public. Credit card information should not be included on this form. Provide credit card information and authorization on PTO-2038.

FEE CALCULATION (All the fees below are due upon filing or may be subject to a surcharge.)

1. BASIC FILING, SEARCH, AND EXAMINATION FEES

	FILING FEES	Small Entity	SEARCH FEES	Small Entity	EXAMINATION FEES	Small Entity	
Application Type	Fee ($)	Fee ($)	Fee ($)	Fee ($)	Fee ($)	Fee ($)	Fees Paid ($)
Utility	300	150	500	250	200	100	
Design	200	100	100	50	130	65	
Plant	200	100	300	150	160	80	
Reissue	300	150	500	250	600	300	
Provisional	200	100	0	0	0	0	

2. EXCESS CLAIM FEES

Fee Description	Fee ($)	Small Entity Fee ($)
Each claim over 20 (including Reissues)	50	25
Each independent claim over 3 (including Reissues)	200	100
Multiple dependent claims	360	180

Total Claims		Extra Claims	Fee ($)	Fee Paid ($)
_____	- 20 or HP =	_____	x _____	= _____

HP = highest number of total claims paid for, if greater than 20.

Indep. Claims		Extra Claims	Fee ($)	Fee Paid ($)
_____	- 3 or HP =	_____	x _____	= _____

HP = highest number of independent claims paid for, if greater than 3.

Multiple Dependent Claims

Fee ($)	Fee Paid ($)
_____	_____

3. APPLICATION SIZE FEE

If the specification and drawings exceed 100 sheets of paper (excluding electronically filed sequence or computer listings under 37 CFR 1.52(e)), the application size fee due is $250 ($125 for small entity) for each additional 50 sheets or fraction thereof. See 35 U.S.C. 41(a)(1)(G) and 37 CFR 1.16(s).

Total Sheets		Extra Sheets		Number of each additional 50 or fraction thereof	Fee ($)	Fee Paid ($)
_____	- 100 =	_____	/ 50 =	_____ (round up to a whole number)	x _____	= _____

4. OTHER FEE(S)

	Fees Paid ($)
Non-English Specification, $130 fee (no small entity discount)	$510.00
Other (e.g., late filing surcharge): Extension of time Fees 37 CFR 1.17(a)(3) and IDS fee 37 CFR 1.17(P)	$180.00

SUBMITTED BY

Signature		Registration No. (Attorney/Agent) 45,786	Telephone 201-831-0575
Name (Print/Type)	SCOTT H. KALIKO, ESQ.		Date 5 APRIL 2006

This collection of information is required by 37 CFR 1.136. The information is required to obtain or retain a benefit by the public which is to file (and by the USPTO to process) an application. Confidentiality is governed by 35 U.S.C. 122 and 37 CFR 1.14. This collection is estimated to take 30 minutes to complete, including gathering, preparing, and submitting the completed application form to the USPTO. Time will vary depending upon the individual case. Any comments on the amount of time you require to complete this form and/or suggestions for reducing this burden, should be sent to the Chief Information Officer, U.S. Patent and Trademark Office, U.S. Department of Commerce, P.O. Box 1450, Alexandria, VA 22313-1450. DO NOT SEND FEES OR COMPLETED FORMS TO THIS ADDRESS. **SEND TO: Commissioner for Patents, P.O. Box 1450, Alexandria, VA 22313-1450.**

If you need assistance in completing the form, call 1-800-PTO-9199 and select option 2.

RECEIVED
CENTRAL FAX CENTER
APR - 5 2006

PTO/SB/17 (01-06)
Approved for use through 07/31/2006. OMB 0651-0032
U.S. Patent and Trademark Office: U.S. DEPARTMENT OF COMMERCE
Under the Paperwork Reduction Act of 1995 no persons are required to respond to a collection of information unless it displays a valid OMB control number

Fees pursuant to the Consolidated Appropriations Act, 2005 (H.R. 4818).

FEE TRANSMITTAL
For FY 2006

☑ Applicant claims small entity status. See 37 CFR 1.27

TOTAL AMOUNT OF PAYMENT ($) 690.00

Complete if Known	
Application Number	10/600,975
Filing Date	JUNE 20, 2003
First Named Inventor	MICHAEL E. SHANAHAN
Examiner Name	JOY KIMBERLY CONTEE
Art Unit	2686
Attorney Docket No.	MES/002 CON

METHOD OF PAYMENT (check all that apply)

☐ Check ☑ Credit Card ☐ Money Order ☐ None ☐ Other (please identify): _____

☐ Deposit Account Deposit Account Number: _____ Deposit Account Name: _____

For the above-identified deposit account, the Director is hereby authorized to: (check all that apply)

☑ Charge fee(s) indicated below ☐ Charge fee(s) indicated below, except for the filing fee

☑ Charge any additional fee(s) or underpayments of fee(s) under 37 CFR 1.16 and 1.17 ☐ Credit any overpayments

WARNING: Information on this form may become public. Credit card information should not be included on this form. Provide credit card information and authorization on PTO-2038.

FEE CALCULATION (All the fees below are due upon filing or may be subject to a surcharge.)

1. BASIC FILING, SEARCH, AND EXAMINATION FEES

	FILING FEES		SEARCH FEES		EXAMINATION FEES		
		Small Entity		Small Entity		Small Entity	
Application Type	Fee ($)	Fee ($)	Fee ($)	Fee ($)	Fee ($)	Fee ($)	Fees Paid ($)
Utility	300	150	500	250	200	100	
Design	200	100	100	50	130	65	
Plant	200	100	300	150	160	80	
Reissue	300	150	500	250	600	300	
Provisional	200	100	0	0	0	0	

2. EXCESS CLAIM FEES

Fee Description	Fee ($)	Small Entity Fee ($)
Each claim over 20 (including Reissues)	50	25
Each independent claim over 3 (including Reissues)	200	100
Multiple dependent claims	360	180

Total Claims _____ - 20 or HP = _____ x _____ = _____ Extra Claims / Fee ($) / Fee Paid ($)

HP = highest number of total claims paid for, if greater than 20.

Indep. Claims _____ - 3 or HP = _____ x _____ = _____ Extra Claims / Fee ($) / Fee Paid ($)

HP = highest number of independent claims paid for, if greater than 3.

Multiple Dependent Claims — Fee ($) _____ Fee Paid ($) _____

3. APPLICATION SIZE FEE

If the specification and drawings exceed 100 sheets of paper (excluding electronically filed sequence or computer listings under 37 CFR 1.52(e)), the application size fee due is $250 ($125 for small entity) for each additional 50 sheets or fraction thereof. See 35 U.S.C. 41(a)(1)(G) and 37 CFR 1.16(s).

Total Sheets _____ - 100 = _____ Extra Sheets / 50 = _____ Number of each additional 50 or fraction thereof (round up to a whole number) x _____ Fee ($) = _____ Fee Paid ($)

4. OTHER FEE(S)

	Fees Paid ($)
Non-English Specification. $130 fee (no small entity discount)	$510.00
Other (e.g., late filing surcharge): Extension of time Fees 37 CFR 1.17(a)(3) and IDS fee 37 CFR 1.17(P)	$180.00

SUBMITTED BY			
Signature		Registration No. (Attorney/Agent) 45,786	Telephone 201-831-0575
Name (Print/Type)	SCOTT H. KALIKO, ESQ.		Date 5 APRIL 2006

This collection of information is required by 37 CFR 1.136. The information is required to obtain or retain a benefit by the public which is to file (and by the USPTO to process) an application. Confidentiality is governed by 35 U.S.C. 122 and 37 CFR 1.14. This collection is estimated to take 30 minutes to complete, including gathering, preparing, and submitting the completed application form to the USPTO. Time will vary depending upon the individual case. Any comments on the amount of time you require to complete this form and/or suggestions for reducing this burden, should be sent to the Chief Information Officer, U.S. Patent and Trademark Office, U.S. Department of Commerce, P.O. Box 1450, Alexandria, VA 22313-1450. DO NOT SEND FEES OR COMPLETED FORMS TO THIS ADDRESS. **SEND TO: Commissioner for Patents, P.O. Box 1450, Alexandria, VA 22313-1450.**

If you need assistance in completing the form, call 1-800-PTO-9199 and select option 2.

PAGE 4/26 * RCVD AT 4/5/2006 1:28:06 PM [Eastern Daylight Time] * SVR:USPTO-EFXRF-5/14 * DNIS:2738300 * CSID:2018310519 * DURATION (mm-ss):06-50

PTO/SB/06 (12-04)
Approved for use through 7/31/2006. OMB 0651-0032
U.S. Patent and Trademark Office; U.S. DEPARTMENT OF COMMERCE
Under the Paperwork Reduction Act of 1995, no persons are required to respond to a collection of information unless it displays a valid OMB control number.

PATENT APPLICATION FEE DETERMINATION RECORD

Substitute for Form PTO-875

Application or Docket Number 10/600975

APPLICATION AS FILED – PART I

FOR	(Column 1) NUMBER FILED	(Column 2) NUMBER EXTRA	SMALL ENTITY RATE ($)	SMALL ENTITY FEE ($)	OR	OTHER THAN SMALL ENTITY RATE ($)	OTHER THAN SMALL ENTITY FEE ($)
BASIC FEE (37 CFR 1.16(a), (b), or (c))							
SEARCH FEE (37 CFR 1.16(k), (i), or (m))							
EXAMINATION FEE (37 CFR 1.16(o), (p), or (q))							
TOTAL CLAIMS (37 CFR 1.16(i))	minus 20 =	*	X =		OR	X =	
INDEPENDENT CLAIMS (37 CFR 1.16(h))	minus 3 =	*	X =			X =	
APPLICATION SIZE FEE (37 CFR 1.16(s))	If the specification and drawings exceed 100 sheets of paper, the application size fee due is $250 ($125 for small entity) for each additional 50 sheets or fraction thereof. See 35 U.S.C. 41(a)(1)(G) and 37 CFR 1.16(s).						
MULTIPLE DEPENDENT CLAIM PRESENT (37 CFR 1.16(j))							
* If the difference in column 1 is less than zero, enter "0" in column 2.			TOTAL			TOTAL	

APPLICATION AS AMENDED – PART II

4/5/06

AMENDMENT A

	(Column 1) CLAIMS REMAINING AFTER AMENDMENT		(Column 2) HIGHEST NUMBER PREVIOUSLY PAID FOR	(Column 3) PRESENT EXTRA	SMALL ENTITY RATE ($)	SMALL ENTITY ADDITIONAL FEE ($)	OR	OTHER THAN SMALL ENTITY RATE ($)	OTHER THAN SMALL ENTITY ADDITIONAL FEE ($)
Total (37 CFR 1.16(i))	*	Minus	**	=	X =		OR	X =	
Independent (37 CFR 1.16(h))	*	Minus	***	=	X =		OR	X =	
Application Size Fee (37 CFR 1.16(s))									
FIRST PRESENTATION OF MULTIPLE DEPENDENT CLAIM (37 CFR 1.16(j))							OR		
					TOTAL ADD'L FEE		OR	TOTAL ADD'L FEE	

AMENDMENT B

	(Column 1) CLAIMS REMAINING AFTER AMENDMENT		(Column 2) HIGHEST NUMBER PREVIOUSLY PAID FOR	(Column 3) PRESENT EXTRA	SMALL ENTITY RATE ($)	SMALL ENTITY ADDITIONAL FEE ($)	OR	OTHER THAN SMALL ENTITY RATE ($)	OTHER THAN SMALL ENTITY ADDITIONAL FEE ($)
Total (37 CFR 1.16(i))	*	Minus	**	=	X =		OR	X =	
Independent (37 CFR 1.16(h))	*	Minus	***	=	X =		OR	X =	
Application Size Fee (37 CFR 1.16(s))									
FIRST PRESENTATION OF MULTIPLE DEPENDENT CLAIM (37 CFR 1.16(j))							OR		
					TOTAL ADD'L FEE		OR	TOTAL ADD'L FEE	

* If the entry in column 1 is less than the entry in column 2, write "0" in column 3.
** If the "Highest Number Previously Paid For" IN THIS SPACE is less than 20, enter "20".
*** If the "Highest Number Previously Paid For" IN THIS SPACE is less than 3, enter "3".
The "Highest Number Previously Paid For" (Total or Independent) is the highest number found in the appropriate box in column 1.

This collection of information is required by 37 CFR 1.16. The information is required to obtain or retain a benefit by the public which is to file (and by the USPTO to process) an application. Confidentiality is governed by 35 U.S.C. 122 and 37 CFR 1.14. This collection is estimated to take 12 minutes to complete, including gathering, preparing, and submitting the completed application form to the USPTO. Time will vary depending upon the individual case. Any comments on the amount of time you require to complete this form and/or suggestions for reducing this burden, should be sent to the Chief Information Officer, U.S. Patent and Trademark Office, U.S. Department of Commerce, P.O. Box 1450, Alexandria, VA 22313-1450. DO NOT SEND FEES OR COMPLETED FORMS TO THIS ADDRESS. **SEND TO: Commissioner for Patents, P.O. Box 1450, Alexandria, VA 22313-1450.**

If you need assistance in completing the form, call 1-800-PTO-9199 and select option 2.

UNITED STATES PATENT AND TRADEMARK OFFICE

UNITED STATES DEPARTMENT OF COMMERCE
United States Patent and Trademark Office
Address: COMMISSIONER FOR PATENTS
P.O. Box 1450
Alexandria, Virginia 22313-1450
www.uspto.gov

APPLICATION NO.	FILING DATE	FIRST NAMED INVENTOR	ATTORNEY DOCKET NO.	CONFIRMATION NO.
10/600,975	06/20/2003	Michael E. Shanahan	MES/002CON	7158

39550 7590 10/06/2005

KALIKO & YEAGER, L.L.C.
500 NORTH FRANKLIN TURNPIKE
RAMSEY, NJ 07446

EXAMINER	
CONTEE, JOY KIMBERLY	
ART UNIT	**PAPER NUMBER**
2686	

DATE MAILED: 10/06/2005

Please find below and/or attached an Office communication concerning this application or proceeding.

PTO-90C (Rev. 10/03)

Office Action Summary	Application No.	Applicant(s)	
	10/600,975	SHANAHAN, MICHAEL E.	
	Examiner	Art Unit	
	Joy K Contee	2686	

-- The MAILING DATE of this communication appears on the cover sheet with the correspondence address --

Period for Reply

A SHORTENED STATUTORY PERIOD FOR REPLY IS SET TO EXPIRE 3 MONTH(S) FROM THE MAILING DATE OF THIS COMMUNICATION.

- Extensions of time may be available under the provisions of 37 CFR 1.136(a). In no event, however, may a reply be timely filed after SIX (6) MONTHS from the mailing date of this communication.
- If the period for reply specified above is less than thirty (30) days, a reply within the statutory minimum of thirty (30) days will be considered timely.
- If NO period for reply is specified above, the maximum statutory period will apply and will expire SIX (6) MONTHS from the mailing date of this communication.
- Failure to reply within the set or extended period for reply will, by statute, cause the application to become ABANDONED (35 U.S.C. § 133). Any reply received by the Office later than three months after the mailing date of this communication, even if timely filed, may reduce any earned patent term adjustment. See 37 CFR 1.704(b).

Status

1)☒ Responsive to communication(s) filed on *20 June 2003*.

2a)☐ This action is **FINAL**. 2b)☒ This action is non-final.

3)☐ Since this application is in condition for allowance except for formal matters, prosecution as to the merits is closed in accordance with the practice under *Ex parte Quayle*, 1935 C.D. 11, 453 O.G. 213.

Disposition of Claims

4)☒ Claim(s) *2-82* is/are pending in the application.

4a) Of the above claim(s) _____ is/are withdrawn from consideration.

5)☐ Claim(s) _____ is/are allowed.

6)☒ Claim(s) *2-82* is/are rejected.

7)☐ Claim(s) _____ is/are objected to.

8)☐ Claim(s) _____ are subject to restriction and/or election requirement.

Application Papers

9)☐ The specification is objected to by the Examiner.

10)☒ The drawing(s) filed on *20 June 2003* is/are: a)☒ accepted or b)☐ objected to by the Examiner.

Applicant may not request that any objection to the drawing(s) be held in abeyance. See 37 CFR 1.85(a).

Replacement drawing sheet(s) including the correction is required if the drawing(s) is objected to. See 37 CFR 1.121(d).

11)☐ The oath or declaration is objected to by the Examiner. Note the attached Office Action or form PTO-152.

Priority under 35 U.S.C. § 119

12)☐ Acknowledgment is made of a claim for foreign priority under 35 U.S.C. § 119(a)-(d) or (f).

a)☐ All b)☐ Some * c)☐ None of:

1.☐ Certified copies of the priority documents have been received.

2.☐ Certified copies of the priority documents have been received in Application No. _____.

3.☐ Copies of the certified copies of the priority documents have been received in this National Stage application from the International Bureau (PCT Rule 17.2(a)).

* See the attached detailed Office action for a list of the certified copies not received.

Attachment(s)

1) ☒ Notice of References Cited (PTO-892)
2) ☐ Notice of Draftsperson's Patent Drawing Review (PTO-948)
3) ☒ Information Disclosure Statement(s) (PTO-1449 or PTO/SB/08) Paper No(s)/Mail Date *6/03-5/19/05*.
4) ☐ Interview Summary (PTO-413) Paper No(s)/Mail Date. _____ .
5) ☐ Notice of Informal Patent Application (PTO-152)
6) ☐ Other: _____.

DETAILED ACTION

Claim Rejections - 35 USC § 102

1. The following is a quotation of the appropriate paragraphs of 35 U.S.C. 102 that form the basis for the rejections under this section made in this Office action:

> A person shall be entitled to a patent unless –
>
> (b) the invention was patented or described in a printed publication in this or a foreign country or in public use or on sale in this country, more than one year prior to the date of application for patent in the United States.

2. Claims 2-82 are rejected under 35 U.S.C. 102(b) as being anticipated by Gerszberg et al. (Gerszberg), US. Patent No. 6,385,305.

Regarding claims 2-82, Gerszberg discloses a method of customizing a wireless telephone by programming a video file into the wireless telephone for use as an indicia of an incoming communication the method comprising:

connecting to a remote database that includes a plurality of lists of video files;

allowing a user of the wireless telephone to browse at least one of the lists of video files; allowing the user of the wireless telephone to select at least one of the video files from the browsed list; optionally reviewing the selected video file before downloading the selected video into the wireless telephone; and allowing the user to optionally download the selected video file for use as an indicia of an incoming communication **(col. 9,line 32 to col. 10,line 5).**

Conclusion

3. The prior art made of record and not relied upon is considered pertinent to applicant's disclosure.

Kobayashi, U.S. Patent No. 5,963,877, discloses a telephone call receiver indicator.

4. Any inquiry concerning this communication or earlier communications from the examiner should be directed to Joy K Contee whose telephone number is 571.272.7906. The examiner can normally be reached on Monday through Friday, 5:30 a.m. to 2:00 p.m.

If attempts to reach the examiner by telephone are unsuccessful, the examiner's supervisor, Marsha Banks-Harold can be reached on 571.272.7905. The fax phone number for the organization where this application or proceeding is assigned is 571.273.8300.

Information regarding the status of an application may be obtained from the Patent Application Information Retrieval (PAIR) system. Status information for published applications may be obtained from either Private PAIR or Public PAIR. Status information for unpublished applications is available through Private PAIR only. For more information about the PAIR system, see http://pair-direct.uspto.gov. Should you have questions on access to the Private PAIR system, contact the Electronic Business Center (EBC) at 866-217-9197 (toll-free).

JC

JOY K. CONTEE
PATENT EXAMINER

Notice of References Cited	Application/Control No. 10/600,975	Applicant(s)/Patent Under Reexamination SHANAHAN, MICHAEL E.	
	Examiner Joy K Contee	Art Unit 2686	Page 1 of 1

U.S. PATENT DOCUMENTS

*		Document Number Country Code-Number-Kind Code	Date MM-YYYY	Name	Classification
	A	US-5,963,877	10-1999	Kobayashi, Hironori	455/567
	B	US-6,385,305	05-2002	Gerszberg et al.	379/88.13
	C	US-			
	D	US-			
	E	US-			
	F	US-			
	G	US-			
	H	US-			
	I	US-			
	J	US-			
	K	US-			
	L	US-			
	M	US-			

FOREIGN PATENT DOCUMENTS

*		Document Number Country Code-Number-Kind Code	Date MM-YYYY	Country	Name	Classification
	N					
	O					
	P					
	Q					
	R					
	S					
	T					

NON-PATENT DOCUMENTS

*		Include as applicable: Author, Title Date, Publisher, Edition or Volume, Pertinent Pages)
	U	
	V	
	W	
	X	

*A copy of this reference is not being furnished with this Office action. (See MPEP § 707.05(a).)
Dates in MM-YYYY format are publication dates. Classifications may be US or foreign.

FORM PTO-1449 U.S. DEPARTMENT OF COMMERCE PATENT AND TRADEMARK OFFICE	ATTY. DOCKET NO. MES/002 CON	SERIAL NO.
INFORMATION DISCLOSURE STATEMENT BY APPLICANT	APPLICANT Michael E. Shanahan	
	FILING DATE June 10, 2003	GROUP 2686

U.S. PATENT DOCUMENTS

EXAMINER INITIAL	DOCUMENT NUMBER	DATE	NAME	CLASS	SUBCLASS	FILING DATE IF APPROPRIATE
	5,479,510	12/26/95	Olsen et al.	380	24	
	5,481,599	01/02/96	MacAllister et al	379	101	
	5,483,580	01/09/96	Brandman et al.	379	88	
	5,483,581	01/09/96	Hird et al.	379	132	
	5,485,370	01/16/96	Moss et al.	364	408	
	5,486,686	01/23/96	Zdybel, Jr. et al.	235	375	
	5,487,671	01/30/96	Shpiro et al.	434	185	
	5,490,210	02/06/96	Sasso	379	100	
	5,490,251	02/06/96	Clark et al.	395	200.2	
	5,499,288	03/12/96	Hunt et al.	379	88	
	5,510,777	04/23/96	Pilc et al.	340	825.310	
	5,513,272	04/30/96	Bogosian, Jr.	382	116	
	5,517,605	05/14/96	Wolf	395	155	
	5,526,620	06/18/96	Hallsten	52	246	
	5,530,852	06/25/96	Meske, Jr. et al.	395	600	
	5,533,115	07/02/96	Hollenbach et al.	379	220	
	5,534,855	07/09/96	Shockley et al.	340	825.300	
	5,537,586	07/16/96	Amram et al.	395	600	
	5,542,046	07/30/96	Carlson et al.	395	186	
	5,544,255	08/06/96	Smithies et al.	382	119	
	5,544,322	08/06/96	Cheng et al.	395	200.12	
	5,548,726	08/20/96	Pettus	395	200.09	
	5,550,976	08/27/96	Henderson et al.	395	200.06	
	5,551,021	08/27/96	Harada et al.	395	600	
	5,598,461	01/28/97	Greenberg	379	67	
	5,608,786	03/04/97	Gordon	379	100	
	5,613,012	03/18/97	Hoffman et al	382	115	
	5,623,531	04/22/97	Nilssen	379	56	
	5,661,802	08/26/97	Nilssen	380	20	

EXAMINER Jy Cortes DATE CONSIDERED 9/22/03

EXAMINER: Initial if citation considered, whether or not citation is in conformance with MPEP 609; Draw line through citation if not conformance and not considered. Include copy of this form with next communication to applicant.

FORM PTO-1449	U.S. DEPARTMENT OF COMMERCE PATENT AND TRADEMARK OFFICE	ATTY. DOCKET NO. MES/002 CON	SERIAL NO.
	INFORMATION DISCLOSURE STATEMENT BY APPLICANT	APPLICANT Michael E. Shanahan	
		FILING DATE June 10, 2003	GROUP 2686

	5,687,227	11/11/97	Cohrs et al.	379	374	
	5,689,825	11/18/97	Averbuch et al.	455	89	
	5,727,047	03/10/98	Bentley et al.	379	93	
	5,796,728	08/18/98	Rondeau et al.	370	338	
	5,828,956	10/27/98	Shirai	455	411	
	5,884,262	03/16/99	Wise et al.	704	270	
	5,915,001	06/22/99	Uppaluru	379	88.22	
	5,926,756	07/20/99	Piosenka et al.	455	418	
	5,930,703	07/27/99	Cairns	455	418	
	5,940,752	08/17/99	Henrick	455	419	
	5,953,638	09/14/99	Flood et al.	455	31.2	
	5,999,094	12/07/99	Nilssen	340	507	
	5,999,599	12/07/99	Schaffer et al.	379	93.23	
	6,002,761	12/14/99	Sremac	379	374	
	6,018,654	01/25/00	Valentine et al.	455	414	
	6,018,656	01/25/00	Shirai	455	422	
	6,035,018	03/07/00	Kaufman	379	88.17	
	6,035,189	03/07/00	Ali-Vehmas et al.	455	414	
	6,058,161	05/02/00	Anderson et al.	379	27	
	6,073,003	06/06/00	Nilsenn	455	402	
	6,088,730	07/11/00	Kato et al.	709	227	
	6,094,587	07/25/00	Armanto et al.	455	567	
	6,144,722	11/07/00	Anderson et al.	379	27	
	6,167,130	12/26/00	Rosen	379	355	
	6,167,278	12/26/00	Nilssen	455	462	
	6,179,682	01/30/01	Plain et al.	446	141	
	6,256,378	07/03/01	Iggulden et al.	379	102.3	
	6,366,791	04/02/02	Lin et al.	455	567	

OTHER DOCUMENTS (Including Author, Title, Date, Pertinent Pages, Etc.)

EXAMINER INITIAL	
	PCT Written Opinion NO DATE LISTED

EXAMINER [signature] DATE CONSIDERED 9/1/05

EXAMINER: Initial if citation considered, whether or not citation is in conformance with MPEP 609; Draw line through citation if not conformance and not considered. Include copy of this form with next communication to applicant.

FORM PTO-1449 U.S. DEPARTMENT OF COMMERCE PATENT AND TRADEMARK OFFICE	ATTY. DOCKET NO. MES/002 CON	SERIAL NO.
INFORMATION DISCLOSURE STATEMENT BY APPLICANT	APPLICANT Michael E. Shanahan	
	FILING DATE June 10, 2003	GROUP 2486

U.S. PATENT DOCUMENTS

EXAMINER INITIAL	DOCUMENT NUMBER	DATE	NAME	CLASS	SUBCLASS	FILING DATE IF APPROPRIATE
	5,479,510	12/26/95	Olsen et al.	380	24	
	5,481,599	01/02/96	MacAllister et al	379	101	
	5,483,580	01/09/96	Brandman et al.	379	88	
	5,483,581	01/09/96	Hird et al.	379	132	
	5,485,370	01/16/96	Moss et al.	364	408	
	5,486,686	01/23/96	Zdybel, Jr. et al.	235	375	
	5,487,671	01/30/96	Shpiro et al.	434	185	
	5,490,210	02/06/96	Sasso	379	100	
	5,490,251	02/06/96	Clark et al.	395	200.2	
	5,499,288	03/12/96	Hunt et al.	379	88	
	5,510,777	04/23/96	Pilc et al.	340	825.310	
	5,513,272	04/30/96	Bogosian, Jr.	382	116	
	5,517,605	05/14/96	Wolf	395	155	
	5,526,620	06/18/96	Hallsten	52	246	
	5,530,852	06/25/96	Meske, Jr. et al.	395	600	
	5,533,115	07/02/96	Hollenbach et al.	379	220	
	5,534,855	07/09/96	Shockley et al.	340	825.300	
	5,537,586	07/16/96	Amram et al.	395	600	
	5,542,046	07/30/96	Carlson et al.	395	186	
	5,544,255	08/06/96	Smithies et al.	382	119	
	5,544,322	08/06/96	Cheng et al.	395	200.12	
	5,548,726	08/20/96	Pettus	395	200.09	
	5,550,976	08/27/96	Henderson et al.	395	200.06	
	5,551,021	08/27/96	Harada et al.	395	600	
	5,598,461	01/28/97	Greenberg	379	67	
	5,608,786	03/04/97	Gordon	379	100	
	5,613,012	03/18/97	Hoffman et al	382	115	
	5,623,531	04/22/97	Nilssen	379	56	
	5,661,802	08/26/97	Nilssen	380	20	

EXAMINER [signature] DATE CONSIDERED 9/22/05

EXAMINER: Initial if citation considered, whether or not citation is in conformance with MPEP 609; Draw line through citation if not conformance and not considered. Include copy of this form with next communication to applicant.

FORM PTO-1449 U.S. DEPARTMENT OF COMMERCE PATENT AND TRADEMARK OFFICE	ATTY. DOCKET NO. MES/002 CON	SERIAL NO.
INFORMATION DISCLOSURE STATEMENT BY APPLICANT	APPLICANT Michael E. Shanahan	
	FILING DATE June 10, 2003	GROUP 2686

	5,687,227	11/11/97	Cohrs et al.	379	374	
	5,689,825	11/18/97	Averbuch et al.	455	89	
	5,727,047	03/10/98	Bentley et al.	379	93	
	5,796,728	08/18/98	Rondeau et al.	370	338	
	5,828,956	10/27/98	Shirai	455	411	
	5,884,262	03/16/99	Wise et al.	704	270	
	5,915,001	06/22/99	Uppaluru	379	88.22	
	5,926,756	07/20/99	Piosenka et al.	455	418	
	5,930,703	07/27/99	Cairns	455	418	
	5,940,752	08/17/99	Henrick	455	419	
	5,953,638	09/14/99	Flood et al.	455	31.2	
	5,999,094	12/07/99	Nilssen	340	507	
	5,999,599	12/07/99	Schaffer et al.	379	93.23	
	6,002,761	12/14/99	Sremac	379	374	
	6,018,654	01/25/00	Valentine et al.	455	414	
	6,018,656	01/25/00	Shirai	455	422	
	6,035,018	03/07/00	Kaufman	379	88.17	
	6,035,189	03/07/00	Ali-Vehmas et al.	455	414	
	6,058,161	05/02/00	Anderson et al.	379	27	
	6,073,003	06/06/00	Nilsenn	455	402	
	6,088,730	07/11/00	Kato et al.	709	227	
	6,094,587	07/25/00	Armanto et al.	455	567	
	6,144,722	11/07/00	Anderson et al.	379	27	
	6,167,130	12/26/00	Rosen	379	355	
	6,167,278	12/26/00	Nilssen	455	462	
	6,179,682	01/30/01	Plain et al.	446	141	
	6,256,378	07/03/01	Iggulden et al.	379	102.3	
	6,366,791	04/02/02	Lin et al.	455	567	

OTHER DOCUMENTS (Including Author, Title, Date, Pertinent Pages, Etc.)

EXAMINER INITIAL	
	PCT Written Opinion NO DATE USED

EXAMINER [signature] DATE CONSIDERED 9/14/3

EXAMINER: Initial if citation considered, whether or not citation is in conformance with MPEP 609; Draw line through citation if not conformance and not considered. Include copy of this form with next communication to applicant.

FORM PTO-1449 U.S. DEPARTMENT OF COMMERCE
PATENT AND TRADEMARK OFFICE

INFORMATION DISCLOSURE
STATEMENT BY APPLICANT

OIPE JC119 SEP 0 3 2003 PATENT & TRADEMARK OFFICE

ATTY. DOCKET NO.	SERIAL NO.
MES/002 CON	10/600,975
APPLICANT Michael E. Shanahan	
FILING DATE June 20, 2003	GROUP 2686

U.S. PATENT DOCUMENTS

EXAMINER INITIAL	DOCUMENT NUMBER	DATE	NAME	CLASS	SUBCLASS	FILING DATE IF APPROPRIATE
	4,866,766	09/89	Mitzlaff	379	374	—
	4,868,561	09/89	Davis	340	825.44	—
	5,414,444	05/95	Britz	345	156	—
	5,414,751	05/95	Yamada	379	58	—
	5,452,354	09/95	Kyronlahti et al.	379	375	—
	5,461,666	10/95	McMahan et al.	379	67	—
	5,572,571	10/96	Shirai	379	58	—
	5,583,763	12/96	Atcheson et al.	364	551.01	—
	5,600,712	02/97	Hanson et al.	379	142.06	—
	5,606,597	02/97	Newland	379	61	—
	5,612,682	03/97	DeLuca et al.	340	825	—
	5,724,411	03/98	Eisdorfer et al.	379	93.23	—
	5,732,216	03/98	Logan et al.	395	200	—
	5,799,063	08/98	Krane	379	88.04	—
	5,835,495	11/98	Ferriere	370	465	—
	5,842,124	11/98	Kenagy et al.	455	418	—
	5,870,683	02/99	Wells et al.	455	566	—
	5,907,604	05/99	Hsu	379	142.06	—
	5,933,328	08/99	Wallace et al.	361	737	—
	5,940,775	08/99	Kim	455	567	—
	5,948,059	09/99	Schulhof et al.	395	200	—
	5,952,918	09/99	Ohayon	340	539	—
	5,953,408	09/99	Blanvillain et al.	379	374	—
	5,987,323	11/99	Huotari	455	433	—
	6,075,998	06/00	Morishima	455	567	—
	6,091,947	07/00	Sumner	455	413	—
	6,140,568	10/00	Kohler	84	616	—
	6,101,242	08/00	McAllister et al.	379	201.02	—
	6,122,526	09/00	Parluski et al.	455	556	—

EXAMINER Jy Conteo DATE CONSIDERED 9/22/03

EXAMINER: Initial if citation considered, whether or not citation is in conformance with MPEP 609; Draw line through citation if not conformance and not considered. Include copy of this form with next communication to applicant.

FORM PTO-1449	U.S. DEPARTMENT OF COMMERCE PATENT AND TRADEMARK OFFICE	ATTY. DOCKET NO. MES/002 CON	SERIAL NO. 10/600,975
	INFORMATION DISCLOSURE STATEMENT BY APPLICANT	APPLICANT Michael E. Shanahan	
		FILING DATE June 20, 2003	GROUP 2686

OIPE SEP 0 3 2003 JC17 PATENT & TRADEMARK OFFICE

	6,137,525	10/00	Lee et al.	348	14.02	
	6,138,006	10/00	Foti	455	414	
	6,219,413	02/01	Burg	370	352	
	6,222,838	04/01	Sparks et al.	370	352	
	6,226,532	05/01	Ball et al.	704	270	
	6,229,990	05/01	Toshida	455	69	
	6,243,375	06/01	Spiecher	370	352	
	6,308,086	10/01	Yoshino	455	567	
	6,389,124	05/02	Schnarel et al.	379	142.01	
	6,483,531	11/02	Ryu	348	14.01	
	6,496,692	12/02	Shanahan	455	418	

OTHER DOCUMENTS (Including Author, Title, Date, Pertinent Pages, Etc.)

EXAMINER INITIAL	
	[redacted]
	Vazvan WO 00/36857 June 2000
	PCT Search Report PCT/US00/32920, Mar. 20, 2002
	SGS Thompson Microelectronics ST 5092 Data Sheet pp. 1-29 NO DATE USED

EXAMINER [signature] DATE CONSIDERED 9/22/05

EXAMINER: Initial if citation considered, whether or not citation is in conformance with MPEP 609; Draw line through citation if not conformance and not considered. Include copy of this form with next communication to applicant.

OIPE
MAR 0 2 2004
PATENT & TRADEMARK OFFICE

PTO/SB/08A (08-03)
Approved for use through 07/31/2006. OMB 0651-0031
U.S. Patent and Trademark Office; U.S. DEPARTMENT OF COMMERCE
Under the Paperwork Reduction Act of 1995, no persons are required to respond to a collection of information unless it contains a valid OMB control number.

Substitute for form 1449/PTO

INFORMATION DISCLOSURE STATEMENT BY APPLICANT

(Use as many sheets as necessary)

Sheet 1 of 3

Complete if Known	
Application Number	10/600,975
Filing Date	June 20, 2003
First Named Inventor	Michael E. Shanahan
Art Unit	~~2687~~ 2484
Examiner Name	Curtis
Attorney Docket Number	MES/002 CON

U. S. PATENT DOCUMENTS

Examiner Initials*	Cite No.[1]	Document Number Number-Kind Code[2] (if known)	Publication Date MM-DD-YYYY	Name of Patentee or Applicant of Cited Document	Pages, Columns, Lines, Where Relevant Passages or Relevant Figures Appear
		US- 5,220,420	06-15-1993	Hoarty, et al.	
		US- 5,247,347	09-21-1993	Litter, et al.	
		US- 5,253,275	10-12-1993	Yurt, et al.	
		US- 5,262,275	11-16-1993	Mincer, et al.	
		US- 5,341,474	08-23-1994	Gelman, et al	
		US- 5,428,606	06-27-1995	Moskowitz	
		US- 5,440,336	08-08-1995	Buhro, et al.	
		US- 5,442,749	08-15-1995	Northcutt, et al.	
		US- 5,508,733	04-16-1996	Kassatly	
		US- 5,524,141	06-04-1996	Braun, et al.	
		US- 5,528,281	06-18-1996	Grady, et al.	
		US- 5,541,917	06-30-1996	Farris	
		US- 5,550,557	08-27-1996	Verbiest, et al.	
		US- 5,550,578	08-27-1996	Hoarty, et al.	
		US- 5,550,863	08-27-1996	Yurt, et al.	
		US- 5,553,311	09-03-1996	McLaughlin, et al.	
		US- 5,557,675	09-17-1996	Schupak	
		US- 5,561,688	10-01-1996	Jones, Jr.	
		US- 5,563,649	10-08-1996	Gould, et al.	

FOREIGN PATENT DOCUMENTS

Examiner Initials*	Cite No.[1]	Foreign Patent Document Country Code[3]-Number[4]-Kind Code[5] (if known)	Publication Date MM-DD-YYYY	Name of Patentee or Applicant of Cited Document	Pages, Columns, Lines, Where Relevant Passages Or Relevant Figures Appear	T[6]

Examiner Signature		Date Considered	9/22/05

*EXAMINER: Initial if reference considered, whether or not citation is in conformance with MPEP 609. Draw line through citation if not in conformance and not considered. Include copy of this form with next communication to applicant. [1] Applicant's unique citation designation number (optional). [2] See Kinds Codes of USPTO Patent Documents at www.uspto.gov or MPEP 901.04. [3] Enter Office that issued the document, by the two-letter code (WIPO Standard ST.3). [4] For Japanese patent documents, the indication of the year of the reign of the Emperor must precede the serial number of the patent document. [5] Kind of document by the appropriate symbols as indicated on the document under WIPO Standard ST.16 if possible. [6] Applicant is to place a check mark here if English language Translation is attached.

This collection of information is required by 37 CFR 1.97 and 1.98. The information is required to obtain or retain a benefit by the public which is to file (and by the USPTO to process) an application. Confidentiality is governed by 35 U.S.C. 122 and 37 CFR 1.14. This collection is estimated to take 2 hours to complete, including gathering, preparing, and submitting the completed application form to the USPTO. Time will vary depending upon the individual case. Any comments on the amount of time you require to complete this form and/or suggestions for reducing this burden, should be sent to the Chief Information Officer, U.S. Patent and Trademark Office, P.O. Box 1450, Alexandria, VA 22313-1450. DO NOT SEND FEES OR COMPLETED FORMS TO THIS ADDRESS. SEND TO: Commissioner for Patents, P.O. Box 1450, Alexandria, VA 22313-1450.

If you need assistance in completing the form, call 1-800-PTO-9199 (1-800-786-9199) and select option 2.

OIPE JC16 MAR 0 2 2004 PATENT & TRADEMARK OFFICE

PTO/SB/08A (08-03)
Approved for use through 07/31/2006. OMB 0651-0031
U.S. Patent and Trademark Office; U.S. DEPARTMENT OF COMMERCE
Under the Paperwork Reduction Act of 1995, no persons are required to respond to a collection of information unless it contains a valid OMB control number.

Substitute for form 1449/PTO

INFORMATION DISCLOSURE STATEMENT BY APPLICANT

(Use as many sheets as necessary)

Sheet 2 of 3

Complete if Known	
Application Number	10/600,975
Filing Date	JUNE 20, 2003
First Named Inventor	MICHAEL E. SHANAHAN
Art Unit	2681 2691
Examiner Name	JM Cortez
Attorney Docket Number	MES/0026CON

U. S. PATENT DOCUMENTS

Examiner Initials*	Cite No.[1]	Document Number Number-Kind Code[2] (if known)	Publication Date MM-DD-YYYY	Name of Patentee or Applicant of Cited Document	Pages, Columns, Lines, Where Relevant Passages or Relevant Figures Appear
JC		US- 5,566,353	10-15-1996	Cho, et al.	
		US- 5,568,181	10-22-1996	Greenwood, et al.	
		US- 5,570,126	10-29-1996	Blahut, et al.	
		US- 5,613,190	03-18-1997	Hylton, et al.	
		US- 5,613,191	03-18-1997	Hylton, et al.	
		US- 5,619,247	04-08-1997	Russo	
		US- 5,625,404	04-29-1997	Grady, et al.	
		US- 5,625,405	04-29-1997	DuLac, et al.	
		US- 5,644,354	07-01-1997	Thompson, et al.	
		US- 5,675,738	10-07-1997	Suzuki, et al.	
		US- 5,677,905	10-14-1997	Bigham, et al.	
		US- 5,680,325	10-21-1997	Rohner	
		US- 5,790,423	08-04-1998	Lau, et al.	
		US- 5,793,413	08-11-1998	Hylton, et al.	
		US- 5,793,980	08-11-1998	Glaser, et al.	
		US- 5,880,770	03-09-1999	Ilcisin, et al.	
		US- 5,926,624	07-20-1999	Katz, et al.	
		US- 5,943,046	08-24-1999	Cave, et al.	
		US- 5,983,069	11-09-1999	Cho, et al.	

FOREIGN PATENT DOCUMENTS

Examiner Initials*	Cite No.[1]	Foreign Patent Document Country Code[3]-Number[4]-Kind Code[5] (if known)	Publication Date MM-DD-YYYY	Name of Patentee or Applicant of Cited Document	Pages, Columns, Lines, Where Relevant Passages Or Relevant Figures Appear	T[6]

Examiner Signature	JM Cortez	Date Considered	9/22/08

*EXAMINER: Initial if reference considered, whether or not citation is in conformance with MPEP 609. Draw line through citation if not in conformance and not considered. Include copy of this form with next communication to applicant. [1] Applicant's unique citation designation number (optional). [2] See Kinds Codes of USPTO Patent Documents at www.uspto.gov or MPEP 901.04. [3] Enter Office that issued the document, by the two-letter code (WIPO Standard ST.3). [4] For Japanese patent documents, the indication of the year of the reign of the Emperor must precede the serial number of the patent document. [5] Kind of document by the appropriate symbols as indicated on the document under WIPO Standard ST.16 if possible. [6] Applicant is to place a check mark here if English language Translation is attached.

This collection of information is required by 37 CFR 1.97 and 1.98. The information is required to obtain or retain a benefit by the public which is to file (and by the USPTO to process) an application. Confidentiality is governed by 35 U.S.C. 122 and 37 CFR 1.14. This collection is estimated to take 2 hours to complete, including gathering, preparing, and submitting the completed application form to the USPTO. Time will vary depending upon the individual case. Any comments on the amount of time you require to complete this form and/or suggestions for reducing this burden, should be sent to the Chief Information Officer, U.S. Patent and Trademark Office, P.O. Box 1450, Alexandria, VA 22313-1450. DO NOT SEND FEES OR COMPLETED FORMS TO THIS ADDRESS. **SEND TO: Commissioner for Patents, P.O. Box 1450, Alexandria, VA 22313-1450.**

If you need assistance in completing the form, call 1-800-PTO-9199 (1-800-786-9199) and select option 2.

OIPE JC16 MAR 02 2004 PATENT & TRADEMARK OFFICE

PTO/SB/08A (08-03)
Approved for use through 07/31/2006. OMB 0651-0031
U.S. Patent and Trademark Office; U.S. DEPARTMENT OF COMMERCE
Under the Paperwork Reduction Act of 1995, no persons are required to respond to a collection of information unless it contains a valid OMB control number.

Substitute for form 1449/PTO

INFORMATION DISCLOSURE STATEMENT BY APPLICANT

(Use as many sheets as necessary)

Sheet 3 of 3

Complete if Known	
Application Number	10/600,975
Filing Date	JUNE 20, 2003
First Named Inventor	Michael E. Shanahan
Art Unit	2681 2696
Examiner Name	
Attorney Docket Number	MES/002CON

U. S. PATENT DOCUMENTS

Examiner Initials*	Cite No.[1]	Document Number Number-Kind Code[2] (if known)	Publication Date MM-DD-YYYY	Name of Patentee or Applicant of Cited Document	Pages, Columns, Lines, Where Relevant Passages or Relevant Figures Appear
JL		US- 5,986,690	11-161999	Hendricks	
JL		US- 6,002,720	12-14-1999	Yurt, et al.	
		US-			
		US-			
		US-			
		US-			
		US-			
		US-			
		US-			
		US-			
		US-			
		US-			
		US-			
		US-			
		US-			
		US-			
		US-			
		US-			
		US-			

FOREIGN PATENT DOCUMENTS

Examiner Initials*	Cite No.[1]	Foreign Patent Document Country Code[3]-Number[4]-Kind Code[5] (if known)	Publication Date MM-DD-YYYY	Name of Patentee or Applicant of Cited Document	Pages, Columns, Lines, Where Relevant Passages Or Relevant Figures Appear	T[6]

Examiner Signature	JL Carter	Date Considered	9/22/05

*EXAMINER: Initial if reference considered, whether or not citation is in conformance with MPEP 609. Draw line through citation if not in conformance and not considered. Include copy of this form with next communication to applicant. [1] Applicant's unique citation designation number (optional). [2] See Kinds Codes of USPTO Patent Documents at www.uspto.gov or MPEP 901.04. [3] Enter Office that issued the document, by the two-letter code (WIPO Standard ST.3). [4] For Japanese patent documents, the indication of the year of the reign of the Emperor must precede the serial number of the patent document. [5] Kind of document by the appropriate symbols as indicated on the document under WIPO Standard ST.16 if possible. [6] Applicant is to place a check mark here if English language Translation is attached.

This collection of information is required by 37 CFR 1.97 and 1.98. The information is required to obtain or retain a benefit by the public which is to file (and by the USPTO to process) an application. Confidentiality is governed by 35 U.S.C. 122 and 37 CFR 1.14. This collection is estimated to take 2 hours to complete, including gathering, preparing, and submitting the completed application form to the USPTO. Time will vary depending upon the individual case. Any comments on the amount of time you require to complete this form and/or suggestions for reducing this burden, should be sent to the Chief Information Officer, U.S. Patent and Trademark Office, P.O. Box 1450, Alexandria, VA 22313-1450. DO NOT SEND FEES OR COMPLETED FORMS TO THIS ADDRESS. **SEND TO: Commissioner for Patents, P.O. Box 1450, Alexandria, VA 22313-1450.**

If you need assistance in completing the form, call 1-800-PTO-9199 (1-800-786-9199) and select option 2.

OIPE JC48 MAY 19 2005 PATENT & TRADEMARK

PTO/SB/08A (08-03)
Approved for use through 07/31/2006. OMB 0651-0031
U.S. Patent and Trademark Office; U.S. DEPARTMENT OF COMMERCE

Under the Paperwork Reduction Act of 1995, no persons are required to respond to a collection of information unless it contains a valid OMB control number.

Substitute for form 1449/PTO

INFORMATION DISCLOSURE STATEMENT BY APPLICANT

(Use as many sheets as necessary)

Sheet 1 of 1

Complete if Known	
Application Number	10/600,975
Filing Date	June 20, 2003
First Named Inventor	Michael E. Shanahan
Art Unit	2685 2686
Examiner Name	Edward F. Urban JOY CANTEE
Attorney Docket Number	MES-002-con1

U. S. PATENT DOCUMENTS

Examiner Initials*	Cite No.[1]	Document Number Number-Kind Code[2] (if known)	Publication Date MM-DD-YYYY	Name of Patentee or Applicant of Cited Document	Pages, Columns, Lines, Where Relevant Passages or Relevant Figures Appear
		US- 5,694,455	12-02-1997	GOODMAN	
		US-			
		US-			
		US-			
		US-			
		US-			
		US-			
		US-			
		US-			
		US-			
		US-			
		US-			
		US-			
		US-			
		US-			
		US-			
		US-			
		US-			
		US-			
		US-			
		US-			

FOREIGN PATENT DOCUMENTS

Examiner Initials*	Cite No.[1]	Foreign Patent Document Country Code[3]-Number[4]-Kind Code[5] (if known)	Publication Date MM-DD-YYYY	Name of Patentee or Applicant of Cited Document	Pages, Columns, Lines, Where Relevant Passages Or Relevant Figures Appear	T[6]
		WO-98/11487	03-19-1998	AUDIBLE, INC.		

Examiner Signature		Date Considered	9/22/05

*EXAMINER: Initial if reference considered, whether or not citation is in conformance with MPEP 609. Draw line through citation if not in conformance and not considered. Include copy of this form with next communication to applicant. [1] Applicant's unique citation designation number (optional). [2] See Kinds Codes of USPTO Patent Documents at www.uspto.gov or MPEP 901.04. [3] Enter Office that issued the document, by the two-letter code (WIPO Standard ST.3). [4] For Japanese patent documents, the indication of the year of the reign of the Emperor must precede the serial number of the patent document. [5] Kind of document by the appropriate symbols as indicated on the document under WIPO Standard ST.16 if possible. [6] Applicant is to place a check mark here if English language Translation is attached.

This collection of information is required by 37 CFR 1.97 and 1.98. The information is required to obtain or retain a benefit by the public which is to file (and by the USPTO to process) an application. Confidentiality is governed by 35 U.S.C. 122 and 37 CFR 1.14. This collection is estimated to take 2 hours to complete, including gathering, preparing, and submitting the completed application form to the USPTO. Time will vary depending upon the individual case. Any comments on the amount of time you require to complete this form and/or suggestions for reducing this burden, should be sent to the Chief Information Officer, U.S. Patent and Trademark Office, P.O. Box 1450, Alexandria, VA 22313-1450. DO NOT SEND FEES OR COMPLETED FORMS TO THIS ADDRESS. SEND TO: Commissioner for Patents, P.O. Box 1450, Alexandria, VA 22313-1450.

If you need assistance in completing the form, call 1-800-PTO-9199 (1-800-786-9199) and select option 2.

UNITED STATES PATENT AND TRADEMARK OFFICE

UNITED STATES DEPARTMENT OF COMMERCE
United States Patent and Trademark Office
Address: COMMISSIONER FOR PATENTS
P.O. Box 1450
Alexandria, Virginia 22313-1450
www.uspto.gov

BIBDATASHEET

Bib Data Sheet

CONFIRMATION NO. 7158

SERIAL NUMBER	FILING DATE	CLASS	GROUP ART UNIT	ATTORNEY DOCKET NO.
10/600,975	06/20/2003 RULE	455	2686	MES/002CON

APPLICANTS

Michael E. Shanahan, Nyack, NY;

** CONTINUING DATA **********

This application is a CON of 09/518,846 03/03/2000 ABN which claims benefit of 60/169,158 12/06/1999 OKR

** FOREIGN APPLICATIONS ********** NUNC PRO

IF REQUIRED, FOREIGN FILING LICENSE GRANTED ** SMALL ENTITY **
** 08/28/2003

Foreign Priority claimed	STATE OR	SHEETS	TOTAL	INDEPENDENT
☐ yes ☐ no	COUNTRY	DRAWING	CLAIMS	CLAIMS
35 USC 119 (a-d) conditions met ☐ yes ☐ no ☐ Met after Allowance	NY	13	+81	1
Verified and Acknowledged Examiner's Signature Initials				

ADDRESS
39550
KALIKO & YEAGER, L.L.C.
500 NORTH FRANKLIN TURNPIKE
RAMSEY , NJ
07446

TITLE
Methods and apparatuses for programming user-defined information into electronic devices

FILING FEE	FEES: Authority has been given in Paper	
RECEIVED 1234	No. _____ to charge/credit DEPOSIT ACCOUNT No. _____ for following:	☐ All Fees ☐ 1.16 Fees (Filing) ☐ 1.17 Fees (Processing Ext. of time) ☐ 1.18 Fees (Issue) ☐ Other _____ ☐ Credit

Index of Claims

Application No.	Applicant(s)	
10/600,975	SHANAHAN, MICHAEL E.	
Examiner	**Art Unit**	
Joy K Contee	2686	

√	Rejected	–	(Through numeral) Cancelled	N	Non-Elected	A	Appeal
=	Allowed	÷	Restricted	I	Interference	O	Objected

Claim		Date
Final	Original	9-22-05
	1	✓
	2	
	3	
	4	
	5	
	6	
	7	
	8	
	9	
	10	
	11	
	12	
	13	
	14	
	15	
	16	
	17	
	18	
	19	
	20	
	21	
	22	
	23	
	24	
	25	
	26	
	27	
	28	
	29	
	30	
	31	
	32	
	33	
	34	
	35	
	36	
	37	
	38	
	39	
	40	
	41	
	42	
	43	
	44	
	45	
	46	
	47	
	48	
	49	
	50	

Claim		Date
Final	Original	9-22-05
	51	
	52	
	53	
	54	
	55	
	56	
	57	
	58	
	59	
	60	
	61	
	62	
	63	
	64	
	65	
	66	
	67	
	68	
	69	
	70	
	71	
	72	
	73	
	74	
	75	
	76	
	77	
	78	
	79	
	80	
	81	
	82	✓
	83	
	84	
	85	
	86	
	87	
	88	
	89	
	90	
	91	
	92	
	93	
	94	
	95	
	96	
	97	
	98	
	99	
	100	

Claim		Date
Final	Original	
	101	
	102	
	103	
	104	
	105	
	106	
	107	
	108	
	109	
	110	
	111	
	112	
	113	
	114	
	115	
	116	
	117	
	118	
	119	
	120	
	121	
	122	
	123	
	124	
	125	
	126	
	127	
	128	
	129	
	130	
	131	
	132	
	133	
	134	
	135	
	136	
	137	
	138	
	139	
	140	
	141	
	142	
	143	
	144	
	145	
	146	
	147	
	148	
	149	
	150	

Search Notes

Application No.	Applicant(s)	
10/600,975	SHANAHAN, MICHAEL E.	
Examiner	**Art Unit**	
Joy K Contee	2686	

SEARCHED			
Class	Subclass	Date	Examiner
455	567 502 418	9/22/05	
379	88.13		
348	14.06		
725	1,104		
	46,121		
709	219		

INTERFERENCE SEARCHED			
Class	Subclass	Date	Examiner

SEARCH NOTES (INCLUDING SEARCH STRATEGY)		
	DATE	EXMR
USPUB, USPAT → EAST keyword	9/14/05	

Ref #	Hits	Search Query	DBs	Default Operator	Plurals	Time Stamp
L1	685	455/567.ccls.	US-PGPUB; USPAT; EPO; JPO; DERWENT	OR	OFF	2005/09/14 15:13
L2	7684	video near10 incoming	US-PGPUB; USPAT; EPO; JPO; DERWENT	OR	OFF	2005/09/14 15:14
L3	6	l1 and l2	US-PGPUB; USPAT; EPO; JPO; DERWENT	OR	OFF	2005/09/14 15:14

OIPE
AUG 1 2 2005
PATENT & TRADEMARK OFFICE

IFW

PTO/SB/123 (09-04)
Approved for use through 11/30/2005. OMB 0651-0035
U.S. Patent and Trademark Office; U.S. DEPARTMENT OF COMMERCE
Under the Paperwork Reduction Act of 1995, no persons are required to respond to a collection of information unless it displays a valid OMB control number.

CHANGE OF CORRESPONDENCE ADDRESS
Patent

Address to:
Mail Stop Post Issue
Commissioner for Patents
P.O. Box 1450
Alexandria, VA 22313-1450

Patent Number	
Issue Date	
Application Number	10/600,975
Filing Date	June 20, 2003
First Named Inventor	Michael E. Shanahan
Attorney Docket Number	MES-002 CON

Please change the Correspondence Address for the above-identified patent to:

☑ The address associated with Customer Number: 39550

OR

☐ **Firm *or* Individual Name**

Address

City | **State** | **ZIP**

Country

Telephone | **Fax**

This form cannot be used to change the data associated with a Customer Number. To change the data associated with an existing Customer Number use "Request for Customer Number Data Change" (PTO/SB/124).

This form will not affect any "fee address" provided for the above-identified patent. To change a "fee address" use the "Fee Address Indication Form" (PTO/SB/47).

I am the:

☐ Patentee.

☑ Assignee of record of the entire interest. See 37 CFR 3.71.
Statement under 37 CFR 3.73(b) is enclosed. (Form PTO/SB/96).

☐ Attorney or agent of record. Registration Number _____.

Signature

Typed or Printed Name Kevin T. McCarthy, Esq.

Date | Telephone

NOTE: Signatures of all the inventors or assignees of record of the entire interest or their representative(s) are required. Submit multiple forms if more than one signature is required, see below*.

☑ *Total of 1 forms are submitted.

This collection of information is required by 37 CFR 1.33. The information is required to obtain or retain a benefit by the public which is to file (and by the USPTO to process) an application. Confidentiality is governed by 35 U.S.C. 122 and 37 CFR 1.11 and 1.14. This collection is estimated to take 3 minutes to complete, including gathering, preparing, and submitting the completed application form to the USPTO. Time will vary depending upon the individual case. Any comments on the amount of time you require to complete this form and/or suggestions for reducing this burden, should be sent to the Chief Information Officer, U.S. Patent and Trademark Office, U.S. Department of Commerce, P.O. Box 1450, Alexandria, VA 22313-1450. DO NOT SEND FEES OR COMPLETED FORMS TO THIS ADDRESS. **SEND TO: Mail Stop Post Issue, Commissioner for Patents, P.O. Box 1450, Alexandria, VA 22313-1450.**

If you need assistance in completing the form, call 1-800-PTO-9199 and select option 2.

OIPE
AUG 12 2005
PATENT & TRADEMARK OFFICE

PTO/SB/96 (09-04)
Approved for use through 07/31/2006. OMB 0651-0031
U.S. Patent and Trademark Office; U.S. DEPARTMENT OF COMMERCE
Under the Paperwork Reduction Act of 1995, no persons are required to respond to a collection of information unless it displays a valid OMB control number.

STATEMENT UNDER 37 CFR 3.73(b)

Applicant/Patent Owner: Twenty Year Innovations, Inc.

Application No./Patent No.: 10/600,975 Filed/Issue Date: June 20, 2003

Entitled: METHODS AND APPARATUSES FOR PROGRAMMING USER-DEFINED INFORMATION INTO ELECTRONIC DEVICES

Twenty Year Innovations, Inc., a corporation
(Name of Assignee) (Type of Assignee, e.g., corporation, partnership, university, government agency, etc.)

states that it is:

1. ☑ the assignee of the entire right, title, and interest; or

2. ☐ an assignee of less than the entire right, title and interest.
The extent (by percentage) of its ownership interest is_____ %

in the patent application/patent identified above by virtue of either:

A. ☑ An assignment from the inventor(s) of the patent application/patent identified above. The assignment was recorded in the United States Patent and Trademark Office at Reel 015027, Frame 0049, or for which a copy thereof is attached.

OR

B. ☐ A chain of title from the inventor(s), of the patent application/patent identified above, to the current assignee as shown below:

1. From: _____ To: _____
The document was recorded in the United States Patent and Trademark Office at
Reel _____, Frame _____, or for which a copy thereof is attached.

2. From: _____ To: _____
The document was recorded in the United States Patent and Trademark Office at
Reel _____, Frame _____, or for which a copy thereof is attached.

3. From: _____ To: _____
The document was recorded in the United States Patent and Trademark Office at
Reel _____, Frame _____, or for which a copy thereof is attached.

☐ Additional documents in the chain of title are listed on a supplemental sheet.

☐ Copies of assignments or other documents in the chain of title are attached.
[NOTE: A separate copy (*i.e.*, a true copy of the original assignment document(s)) must be submitted to Assignment Division in accordance with 37 CFR Part 3, if the assignment is to be recorded in the records of the USPTO. See MPEP 302.08]

The undersigned (whose title is supplied below) is authorized to act on behalf of the assignee.

_____ _____
Signature Date

Kevin T. McCarthy, Esq. _____
Printed or Typed Name Telephone Number

Chief Executive Officer
Title

This collection of information is required by 37 CFR 3.73(b). The information is required to obtain or retain a benefit by the public which is to file (and by the USPTO to process) an application. Confidentiality is governed by 35 U.S.C. 122 and 37 CFR 1.11 and 1.14. This collection is estimated to take 12 minutes to complete, including gathering, preparing, and submitting the completed application form to the USPTO. Time will vary depending upon the individual case. Any comments on the amount of time you require to complete this form and/or suggestions for reducing this burden, should be sent to the Chief Information Officer, U.S. Patent and Trademark Office, U.S. Department of Commerce, P.O. Box 1450, Alexandria, VA 22313-1450. DO NOT SEND FEES OR COMPLETED FORMS TO THIS ADDRESS. **SEND TO: Commissioner for Patents, P.O. Box 1450, Alexandria, VA 22313-1450.**

If you need assistance in completing the form, call 1-800-PTO-9199 and select option 2.

OIPE JC48 MAY 19 2005 PATENT & TRADEMARK OFFICE

PTO/SB/21 (09-04)
Approved for use through 07/31/2006. OMB 0651-0031
U.S. Patent and Trademark Office; U.S. DEPARTMENT OF COMMERCE
Under the Paperwork Reduction Act of 1995, no persons are required to respond to a collection of information unless it displays a valid OMB control number.

TRANSMITTAL FORM

(to be used for all correspondence after initial filing)

Total Number of Pages in This Submission	45

Application Number	10/600,975
Filing Date	June 20, 2003
First Named Inventor	Michael E. Shanahan
Art Unit	2685
Examiner Name	Edward F. Urban
Attorney Docket Number	MES-002-con1

ENCLOSURES *(Check all that apply)*

- ☐ Fee Transmittal Form
  - ☐ Fee Attached
- ☐ Amendment/Reply
  - ☐ After Final
  - ☐ Affidavits/declaration(s)
- ☐ Extension of Time Request
- ☐ Express Abandonment Request
- ☑ Information Disclosure Statement
- ☐ Certified Copy of Priority Document(s)
- ☐ Reply to Missing Parts/ Incomplete Application
  - ☐ Reply to Missing Parts under 37 CFR 1.52 or 1.53
- ☐ Drawing(s)
- ☐ Licensing-related Papers
- ☐ Petition
- ☐ Petition to Convert to a Provisional Application
- ☐ Power of Attorney, Revocation Change of Correspondence Address
- ☐ Terminal Disclaimer
- ☐ Request for Refund
- ☐ CD, Number of CD(s) _____
  - ☐ Landscape Table on CD
- ☐ After Allowance Communication to TC
- ☐ Appeal Communication to Board of Appeals and Interferences
- ☐ Appeal Communication to TC **(Appeal Notice, Brief, Reply Brief)**
- ☐ Proprietary Information
- ☐ Status Letter
- ☑ Other Enclosure(s) (please Identify below):

Statement Pursuant to 37 C.F.R. Section 1.97(e)(1); Copy of foreign patent document

Remarks

SIGNATURE OF APPLICANT, ATTORNEY, OR AGENT

Firm Name	Kaliko & Yeager, L.L.C.		
Signature	Todd W. Evans		
Printed name	Todd W. Evans		
Date	May 17, 2005	Reg. No.	44,101

CERTIFICATE OF TRANSMISSION/MAILING

I hereby certify that this correspondence is being facsimile transmitted to the USPTO or deposited with the United States Postal Service with sufficient postage as first class mail in an envelope addressed to: Commissioner for Patents, P.O. Box 1450, Alexandria, VA 22313-1450 on the date shown below:

Signature	Todd W. Evans		
Typed or printed name	Todd W. Evans	Date	May 17, 2005

This collection of information is required by 37 CFR 1.5. The information is required to obtain or retain a benefit by the public which is to file (and by the USPTO to process) an application. Confidentiality is governed by 35 U.S.C. 122 and 37 CFR 1.11 and1.14. This collection is estimated to 2 hours to complete, including gathering, preparing, and submitting the completed application form to the USPTO. Time will vary depending upon the individual case. Any comments on the amount of time you require to complete this form and/or suggestions for reducing this burden, should be sent to the Chief Information Officer, U.S. Patent and Trademark Office, U.S. Department of Commerce, P.O. Box 1450, Alexandria, VA 22313-1450. DO NOT SEND FEES OR COMPLETED FORMS TO THIS ADDRESS. **SEND TO: Commissioner for Patents, P.O. Box 1450, Alexandria, VA 22313-1450.**

If you need assistance in completing the form, call 1-800-PTO-9199 and select option 2.

OIPE
MAY 19 2005
JC48
PATENT & TRADEMARK OFFICE

PATENTS
Attorney Docket No. MES-002-con1

IN THE UNITED STATES PATENT AND TRADEMARK OFFICE

Applicant:	Michael E. Shanahan
Application No.:	10/600,975
Title of Invention:	Methods and Apparatuses for Programming User-Defined Information into Electronic Devices
Filed:	June 20, 2003
Art Unit:	2685
Examiner:	Edward F. Urban

Commissioner for Patents
P.O. Box 1450
Alexandria, VA 22313-1450

STATEMENT PURSUANT TO 37 C.F.R. § 1.97 (e)(1)

Each item of information contained in the attached information disclosure statement was first cited in a communication from a foreign patent office in a counterpart foreign application not more than three months prior to the date that this statement and the attached information disclosure statement are being filed. Since there has been no final action, notice of allowance, or other action that closes prosecution of the present application mailed as of the date that these document are being filed, there is no fee due at this time, pursuant to 37 C.F.R. § 1.97 (c).

Dated: 5/17/05

Todd W. Evans

Todd W. Evans, Esq.
Reg. No. 44,101
Kaliko & Yeager, L.L.C.
Attorneys for Applicant

OIPE
MAY 19 2005
JC48
PATENT & TRADEMARK OFFICE

PTO/SB/08A (08-03)
Approved for use through 07/31/2006. OMB 0651-0031
U.S. Patent and Trademark Office; U.S. DEPARTMENT OF COMMERCE
Under the Paperwork Reduction Act of 1995, no persons are required to respond to a collection of information unless it contains a valid OMB control number.

Substitute for form 1449/PTO

INFORMATION DISCLOSURE STATEMENT BY APPLICANT

(Use as many sheets as necessary)

Sheet 1 of 1

Complete if Known	
Application Number	10/600,975
Filing Date	June 20, 2003
First Named Inventor	Michael E. Shanahan
Art Unit	2685
Examiner Name	Edward F. Urban
Attorney Docket Number	MES-002-con1

U. S. PATENT DOCUMENTS

Examiner Initials*	Cite No.[1]	Document Number Number-Kind Code[2] *(if known)*	Publication Date MM-DD-YYYY	Name of Patentee or Applicant of Cited Document	Pages, Columns, Lines, Where Relevant Passages or Relevant Figures Appear
		US- 5,694,455	12-02-1997	GOODMAN	
		US-			
		US-			
		US-			
		US-			
		US-			
		US-			
		US-			
		US-			
		US-			
		US-			
		US-			
		US-			
		US-			
		US-			
		US-			
		US-			
		US-			
		US-			
		US-			

FOREIGN PATENT DOCUMENTS

Examiner Initials*	Cite No.[1]	Foreign Patent Document Country Code[3]-Number[4]-Kind Code[5] *(if known)*	Publication Date MM-DD-YYYY	Name of Patentee or Applicant of Cited Document	Pages, Columns, Lines, Where Relevant Passages Or Relevant Figures Appear	T[6]
		WO-98/11487	03-19-1998	AUDIBLE, INC.		

Examiner Signature		Date Considered	

*EXAMINER: Initial if reference considered, whether or not citation is in conformance with MPEP 609. Draw line through citation if not in conformance and not considered. Include copy of this form with next communication to applicant. [1] Applicant's unique citation designation number (optional). [2] See Kinds Codes of USPTO Patent Documents at www.uspto.gov or MPEP 901.04. [3] Enter Office that issued the document, by the two-letter code (WIPO Standard ST.3). [4] For Japanese patent documents, the indication of the year of the reign of the Emperor must precede the serial number of the patent document. [5] Kind of document by the appropriate symbols as indicated on the document under WIPO Standard ST.16 if possible. [6] Applicant is to place a check mark here if English language Translation is attached.

This collection of information is required by 37 CFR 1.97 and 1.98. The information is required to obtain or retain a benefit by the public which is to file (and by the USPTO to process) an application. Confidentiality is governed by 35 U.S.C. 122 and 37 CFR 1.14. This collection is estimated to take 2 hours to complete, including gathering, preparing, and submitting the completed application form to the USPTO. Time will vary depending upon the individual case. Any comments on the amount of time you require to complete this form and/or suggestions for reducing this burden, should be sent to the Chief Information Officer, U.S. Patent and Trademark Office, P.O. Box 1450, Alexandria, VA 22313-1450. DO NOT SEND FEES OR COMPLETED FORMS TO THIS ADDRESS. **SEND TO: Commissioner for Patents, P.O. Box 1450, Alexandria, VA 22313-1450.**

If you need assistance in completing the form, call 1-800-PTO-9199 (1-800-786-9199) and select option 2.

PCT WORLD INTELLECTUAL PROPERTY ORGANIZATION
International Bureau

INTERNATIONAL APPLICATION PUBLISHED UNDER THE PATENT COOPERATION TREATY (PCT)

(51) International Patent Classification 6 : G06F 13/00, H04M 11/00

A1

(11) International Publication Number: WO 98/11487

(43) International Publication Date: 19 March 1998 (19.03.98)

(21) International Application Number: PCT/US97/16184

(22) International Filing Date: 12 September 1997 (12.09.97)

(30) Priority Data:
08/710,114 12 September 1996 (12.09.96) US

(71) Applicant: AUDIBLE, INC. [US/US]; 65 Willowbrook Boulevard, Wayne, NJ 07470 (US).

(72) Inventors: KATZ, Donald, R.; 4 Russell Terrace, Montclair, NJ 07042 (US). LAU, Edwin, J.; 1266 Shasta Avenue, San Jose, CA 95126 (US). MOTT, Timothy; 110 Old Mill Road, P.O. Box 6289, Ketchum, ID 83340 (US). BRENNEMAN, Scott, A.; 299 Waverly Street, Menlo Park, CA 94025 (US). CHE-MING JUN, Benjamin; 1081-B Tanland Drive, Palo Alto, CA 94303 (US). HONG-YEN PAI, Samuel; 340 Marmona Drive, Menlo Park, CA 94025 (US).

(74) Agents: SALTER, James, H. et al.; Blakely, Sokoloff, Taylor & Zafman LLP, 7th floor, 12400 Wilshire Boulevard, Los Angeles, CA 90025 (US).

(81) Designated States: AL, AM, AT, AT (Utility model), AU (Petty patent), AZ, BA, BB, BG, BR, BY, CA, CH, CN, CU, CZ, CZ (Utility model), DE, DE (Utility model), DK, DK (Utility model), EE, EE (Utility model), ES, FI, FI (Utility model), GB, GE, GH, HU, ID, IL, IS, JP, KE, KG, KP, KR, KZ, LC, LK, LR, LS, LT, LU, LV, MD, MG, MK, MN, MW, MX, NO, NZ, PL, PT, RO, RU, SD, SE, SG, SI, SK, SK (Utility model), SL, TJ, TM, TR, TT, UA, UG, UZ, VN, YU, ZW, ARIPO patent (GH, KE, LS, MW, SD, SZ, UG, ZW), Eurasian patent (AM, AZ, BY, KG, KZ, MD, RU, TJ, TM), European patent (AT, BE, CH, DE, DK, ES, FI, FR, GB, GR, IE, IT, LU, MC, NL, PT, SE), OAPI patent (BF, BJ, CF, CG, CI, CM, GA, GN, ML, MR, NE, SN, TD, TG).

Published

With international search report.

Before the expiration of the time limit for amending the claims and to be republished in the event of the receipt of amendments.

(54) Title: A DIGITAL INFORMATION LIBRARY AND DELIVERY SYSTEM

(57) Abstract

A computer network based digital information library system employing authentication and encryption protocols for the secure transfer of digital information library programs to a client computer system (214) and a mobile digital information playback device (212) removably connectable to the client computer system. The present invention is a computer network based library and information delivery system for accessing and obtaining selected digital information files. The library and information delivery system comprises: 1) a library server (260) having a plurality of digital information files; 2) a client computer system (214) coupled to the library server (260) over a network (240); and 3) a mobile device (212) removably connectable to the client computer system (214), the client computer system (214) including logic for requesting a download of a selected one or more of the digital information files from the library server (260), the client computer system (214) further including logic for downloading the selected one or more of the digital information files to the mobile device (212).

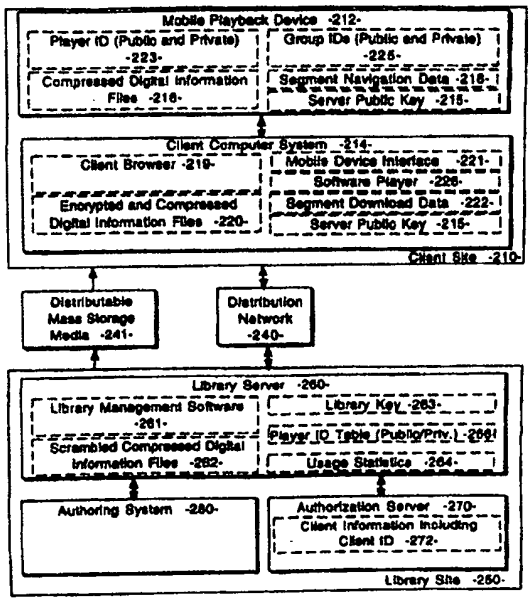

BEST AVAILABLE COPY

1

A DIGITAL INFORMATION LIBRARY AND DELIVERY SYSTEM

FIELD OF THE INVENTION

The present invention relates generally to a digital information transmission, receiving, and playback system. Specifically, the present invention pertains to a computer network based digital information library providing interactive client computer access.

DESCRIPTION OF RELATED ART

Recent technological advances in the compression of digital data and the expansion of storage capacities of computer systems together with the increased bandwidth of computer network infrastructures have created new possibilities for personalized access to and usage of large amounts of digital information. One form of this type of digital information is audio information delivered across a computer network as digitized information.

In the field of interactive digital information transmission, receiving, and playback systems, several patents are known to the present applicants. U.S. Patent No. 5,132,992, issued July 21, 1992 to Yurt et al. (Yurt), describes a system of distributing video and/or audio information employing digital signal processing to achieve high rates of data compression. The Yurt patent describes a transmission system including a conversion means for placing the items from a source material library into a predetermined format as formatted data. Audio data is compressed by an audio compressor by application of an adaptive differential pulse code modulation (ADPCM) process to the audio data. Stored items are accessed in the compressed data library through the use of a unique address code assigned to each item during storage encoding. The unique address code is used for requesting and accessing information and items throughout the Yurt transmission and receiving process. The Yurt transmission system includes means by which a user enters a customer identifier (ID) code by which the system accesses the users account, and indicates to the system that the user is a subscriber of the system. If a subscriber is in good standing, the Yurt system delivers selected titles using the described techniques.

One significant problem with the audio transmission and receiving system described in Yurt is the lack of an effective means for ensuring the security of the digital information library and of the items downloaded to a user from the digital information library. Although Yurt describes the use of a unique identification code assigned to items in the library and a customer ID code assigned to particular users, no authentication protocols or encryption techniques are described to prevent the unauthorized creation of clone libraries or the unauthorized download or copying of library items. Secondly, Yurt and related prior art does not describe an authentication or encryption means providing secure transactions between a server based digital information

library supporting a client computer system having an interface to a mobile playback device. Thirdly, the prior art does not describe a mechanism for selecting a digital information passage to be previewed. Prior art systems also do not describe a system whereby only part of a program gets downloaded from a client computer system to a mobile playback device depending on how much storage space is available in the mobile playback device. Prior art systems also do not describe a mechanism for specifying multiple programs to be downloaded from a digital information library into a mobile playback device. Prior art systems also do not detail the processes required in the authoring system to generate content for the digital information library. Finally, prior art systems do not describe an accounting system whereby library content providers can perform real-time queries on usage information related to the access of library items.

SUMMARY OF THE INVENTION

The preferred embodiment of the present invention is a computer network based digital information library system employing authentication, targeting, and encryption protocols for the secure transfer of digital information library programs to a client computer system and a mobile digital information playback device removably connectable to the client computer system. The present invention is a computer network based library and information delivery system for accessing and obtaining selected digital information files. The library and information delivery system comprises: 1) a library server having a plurality of digital information files; 2) a client computer system coupled to the library server over a network; and 3) a mobile device removably connectable to the client computer system, the client computer system including logic for requesting a download of a selected one or more of the digital information files from the library server, the client computer system further including logic for downloading the selected one or more of the digital information files to the mobile device.

BRIEF DESCRIPTION OF THE DRAWINGS

The accompanying drawings, which are included as part of the present specification, illustrate the presently preferred embodiment of the present invention and together with the general description given above and the detailed description of the preferred embodiment given below serve to explain and teach the principles of the present invention.

Figure 1 illustrates a typical computer platform on which the present invention may be implemented.

Figure 2 illustrates a high level block diagram of the computer network based digital information library system of the present invention.

Figure 3 illustrates a high level block diagram of the authoring system of the present invention.

Figure 4 illustrates an alternative embodiment having a plurality of library servers.

Figure 5 illustrates an alternative embodiment having a plurality of library server processes.

Figure 6 illustrates an alternative embodiment having a single authoring/authorization server.

Figure 7 illustrates an alternative embodiment wherein client computer systems have a local library.

Figure 8 illustrates an alternative embodiment wherein mobile playback devices have a direct network interface in lieu of a client computer system.

Figure 9 illustrates an alternative embodiment wherein a kiosk is used to retain and distribute selected programming.

Figure 10 illustrates an alternative embodiment wherein all system components are connected through a common network.

5

DETAILED DESCRIPTION OF THE PREFERRED EMBODIMENT

The preferred embodiment of the present invention is a computer network based digital information library system employing authentication, targeting, and encryption protocols for the secure transfer of digital information library programs to a client computer system and a mobile digital information playback device removably connectable to the client computer system. In the following detailed description, numerous specific details are set forth in order to provide a thorough understanding of the present invention. However, it will be apparent to one of ordinary skill in the art that these specific details need not be used to practice the present invention. In other instances, well known structures, interfaces, and processes have not been shown in detail in order not to unnecessarily obscure the present invention.

Figure 1 illustrates a typical data processing system upon which one embodiment of the present invention is implemented. It will be apparent to those of ordinary skill in the art, however that other alternative systems of various system architectures may also be used. The data processing system illustrated in Figure 1 includes a bus or other internal communication means 101 for communicating information, and a processor 102 coupled to the bus 101 for processing information. The system further comprises a random access memory (RAM) or other volatile storage device 104 (referred to as main memory), coupled to bus 101 for storing information and instructions to be executed by processor 102. Main memory 104 also may be used for storing temporary variables or other intermediate information during execution of instructions by processor 102. The system also comprises a read only memory (ROM) and/or static storage device 106 coupled to bus 101 for storing static information and instructions for processor 102, and a mass storage device 107 such as a magnetic disk drive or optical disk drive. Mass storage device 107 is coupled to bus 101 and is typically used with a computer readable mass storage medium 108, such as a magnetic or optical disk, for storage of information and instructions. The system may further be coupled to a display device 121, such as a cathode ray tube (CRT) or a liquid crystal display (LCD) coupled to bus 101 through bus 103 for displaying information to a computer user. An alphanumeric input device 122, including alphanumeric and other keys, may also be coupled to bus 101 through bus 103 for communicating information and command selections to processor 102. An additional user input device is cursor control 123, such as a mouse, a trackball, stylus, or cursor direction keys coupled to bus 101 through bus 103 for communicating direction information and command selections to processor 102, and for controlling cursor movement on display device 121. Another device which may optionally be coupled to bus 101 through bus 103 is a hard copy device 124 which may be used for printing instructions, data, or other information on a medium such as paper, film, or similar types of media. In the preferred embodiment, a communication device 125 is coupled to bus 101 through

bus 103 for use in accessing other nodes of a network computer system or other computer peripherals. This communication device 125 may include any of a number of commercially available networking peripheral devices such as those used for coupling to an Ethernet, token ring, Internet, or wide area network. It may also include any number of commercially available peripheral devices designed to communicate with remote computer peripherals such as scanners, terminals, specialized printers, or audio input/output devices. Communication device 125 may also include an RS232 or other conventional serial port, a conventional parallel port, a small computer system interface (SCSI) port or other data communication means. Communications device 125 may use a wireless means of data transfer devices such as the infrared IRDA protocol, spread-spectrum, or wireless LAN. In addition, communication device 125 is used in the preferred embodiment to couple the mobile playback device 212 to the client computer system 214 as described in more detail below. One other device used in the preferred embodiment is sound circuitry 130 either with attached speakers or headphones 132, or with analog audio outputs suitable for input into audio reproduction equipment such as external amplifiers and speakers, cassette adapters, etc. Sound circuitry 130 is well known in the art for playing audio files. Alternatively, sound circuitry may be a radio transmitter which transmits audio data on a predefined frequency for reception and playback by a radio receiver. Other wireless methods are possible.

Note that any or all of the components of the system illustrated in Figure 1 and associated hardware may be used in various embodiments of the present invention; however, it will be appreciated by those of ordinary skill in the art that any configuration of the system may be used for various purposes according to the particular implementation. In one embodiment of the present invention, the data processing system illustrated in Figure 1 is an IBM® compatible personal computer (PC), an Apple MacIntosh® personal computer, or a SUN® SPARC Workstation. Processor 102 may be one of the 80X86 compatible microprocessors such as the 80486 or PENTIUM® brand microprocessors manufactured by INTEL® Corporation of Santa Clara, California.

The software implementing the present invention can be stored in main memory 104, mass storage device 107, or other storage medium accessible to processor 102. It will be apparent to those of ordinary skill in the art that the methods and processes described herein can be implemented as software stored in main memory 104 or read only memory 106 and executed by processor 102. This software may also be resident on an article of manufacture comprising a computer usable mass storage medium 108 having computer readable program code embodied therein and being readable by the mass storage device 107 and for causing the processor 102 to perform digital information library transactions and protocols in accordance with the teachings herein.

Digital Information Library System

Figure 2 illustrates the computer network architecture used in the preferred embodiment of the present invention. In general, the network architecture of the present invention includes a library site 250 coupled to a client site 210 via a conventional distribution network infrastructure 240. This conventional distribution network infrastructure 240 can be implemented as a standard telephone connection provided between the library site 250 and client site 210 through an Internet provider to enable data communication on the Internet over a conventional telephone network. This use of the Internet as a distribution network is well known to those of ordinary skill in the art. In an alternative embodiment having cable modem capability, communication over a conventional cable network is possible in lieu of communication over the telephone network. The cable network is typically much faster (i.e. provides a much greater bandwidth) than the standard telephone network; however, cable modems are typically more expensive than standard POTS (plain old telephone system) modems. In another alternative embodiment having conventional Integrated Services Digital Network (ISDN) capability, the distribution network 240 is accessed using an ISDN modem. Again, the ISDN network is typically faster than the POTS network; however, access to an ISDN network is generally more expensive. Cable modems and ISDN implementations are alternative communications media to the POTS implementation.

In addition, it will be apparent to those of ordinary skill in the art that other forms of networking may equivalently be supported by the present invention. For example, a wireless transmission means such as infrared or radio links may also provide the distribution network 240 described in the present application. As an alternative to the Internet, a proprietary network/bulletin board such as AMERICA-ON-LINE (AOL), or COMPUSERVE may be used.

Each of the servers at library site 250 and the client computer system 214 at client site 210 can be implemented as a computer system such as the one described above in connection with Figure 1. It will be apparent to one of ordinary skill in the art that the library server 260, authoring system 280, and authorization server 270 can be remotely located yet networked together as a distributed system using the techniques described above. In addition, the present invention allows for multiple library servers, authoring systems and authorization servers. Conversely, the servers may be implemented as separate functions of a single machine. These alternative embodiments are illustrated in Figures 4-8 and are described in more detail below.

The mobile playback device 212 is a minimally configured, low-cost, standalone mobile unit for receiving and storing digital information files or programs as downloaded by library server 260 and client computer system 214 and for playing back the digital information files or programs for a user of the mobile playback device 212. The mobile playback device 212 is temporarily removably coupled to the client computer system 214 while the download takes place.

Once downloaded, the mobile playback device 212 may be detached from the client computer system 214 and used as a standalone digital information playback device. A co-pending U.S. Patent Application titled, "Interactive Audio Transmission, Receiving and Playback System", assigned Serial No. 08/490,537, and assigned to the Audible Words Corporation of Montclair, NJ describes the details of mobile playback device 212.

In its basic form, the preferred embodiment of the present invention is a digital information library system providing selection of digital information programming on demand over a computer network. In an alternative embodiment, the digital information programming is selected via the computer network but delivered using mass storage media 241. This alternative embodiment is described in more detail below.

The digital information library is an indexed collection of digital information programming, drawing content from digital information sources such as books, daily news and entertainment feeds, conferences and educational sources, other computer systems, the host on the World Wide Web (WWW) of the Internet, and customized audio or visual image programming. Other sources of the digital information content include, but are not limited to, conference or seminar proceedings, lecture or speech materials, language lessons, readings, comedy, customized spoken digests and related, "need-to-know" business information, computer software, local sound studio material, text to speech conversion of machine readable files, pre-recorded material from magnetic tape, CD-ROM, digital audio tape, or analog cassette tape. This digital information content is input as raw digital information content to authoring system 280 shown in Figure 2. In an alternative embodiment, a raw digital information digitizer 307 is included for receiving raw input and converting the input to a digital form which can be manipulated as a digital information file.

In an alternative embodiment, the digital information comprises digitized image or graphics data used to produce visual images on a display screen or projection screen. These images may be included in the digital information retained and maintained by the library server 260.

Authoring System

Authoring system 280 is used to edit, index, compress, scramble, segment, and catalog digital information content into digital information programs in digital information files, which are stored on mass storage media 241 or on library server 260 as scrambled and compressed digital information files 262. The digital information programs are initially categorized according to traditional criteria (e.g. genre, modern fiction, mystery, adventure, romance, non-fiction, classics, self-help, science fiction, westerns, etc.). Categories associated with specific authors or publishers are also provided. Both unabridged and abridged titles are provided. In some circumstances, it may be necessary to digitize digital information content from an undigitized form. The raw information digitizer 307 is provided for this purpose. Authoring system 280 also

partitions digital information content into segments, which can be identified, searched, and skipped over if desired. All of these functions are performed by authoring system 280.

Figure 3 illustrates the authoring system 280 of the preferred embodiment. Authoring system 280 receives digital information content from a variety of conventional sources as raw digitized data. This digital information data is fed to three components of the authoring system 280 of the preferred embodiment. The digital information compressor 314 receives the raw digital data and compresses the digitized data. There are a variety of conventional techniques in existence for compressing digital data. These techniques can be optimized depending upon the type of digital data being processed. Thus, the present invention provides several compression methods and a means for the authoring system operator 305 to select between these methods based upon the category of digital information content 310 being input to the digital information compressor 314. Alternatively, the selection of compression method may be performed automatically by interpretation of the digital information content 310 itself. A compressed digital information file is output by digital information compressor 314 to scrambler 318.

The raw digital information content 310 is also fed to template header generator 312. Each digital information file maintained by the library server 260 includes other descriptive information used to identify the file's content and to provide information used to process the digital information within the file. Each digital information file includes a template header, a descrambling map, selected preview clips, and the digital information programming itself. In the preferred embodiment, the template header comprises a number of attributes corresponding to the digital information in the file. For example, the digital information may be audio information generated from the content of a book or other published work. In this example, the audio file template header contains attributes including: 1) the title of a book, volume, or medium from which the digital information content originated, 2) the legal copyright associated with the digital information content, 3) audible title(s) of the content, 4) a table of contents of the content, and 5) playback settings for appropriately playing or rendering the digital information. The table of contents contains content navigation information including but not limited to: the number of chapters, the length of the program, and information indicative of the relevant content sections. The table of contents is generated with input from authoring system operator 305 or automatically by analysis of digital information content 310. The descrambling map 322 is used to interpret the digital information after the digital information has been scrambled by scrambler 318 as described below. The preview clips 324 comprise short pre-generated portions of digital information content used to give a consumer a sense of the content of a particular digital information file. In the preferred embodiment, these previews are generated as conventional formatted files which can be directly played by sound generation circuitry 130 or rendered by other means. A digital information file can have several preview clips associated with it. The preview clips 324 are not compressed or

scrambled in the preferred embodiment. The template header 312 remains with the digital information file as it is transferred to the network 240 or mass storage media 241. The other descriptive information related to a digital information file is typically stored with digital information file, but is not required to be so stored.

Referring again to Figure 3, template header generator 312 generates the template header given information from a particular portion of digital information content 310. Input from Authoring System Operator 305 and Digital Information Compressor 314 may be solicited during the header generation process. The template header is provided to library server 260. Other portions of the digital information file header are provided by scrambler 318 and preview generator 323. These portions of the digital information file header are assembled into the header for a particular digital information file by library server 260. The remainder of the digital information file is filled with compressed, scrambled, and segmented digital information content.

After digital information compressor 314 has compressed the raw digital information using a selected compression method suitable for the category of digital information, the scrambler 318 scrambles the digital information. The digital information is scrambled to prevent an unauthorized consumer from using the digital information. In the preferred embodiment, scrambler 318 uses a conventional encryption method to render the data unusable. A corresponding descrambling map 322 is generated to provide a means for descrambling the scrambled digital information file. A scrambling map 316 is used by scrambler 318 to scramble the digital information file. The scrambler 318 can encrypt the entire digital information file or selected critical subsets of the digital information file. The level of scrambling can be selected depending upon the capabilities of the authoring system 280, the mobile playback device 212 and/or the anticipated software player 226 on client computer system 214. In an alternative embodiment, a proprietary digital information format is used in lieu of scrambler 318.

The scrambled digital information content is output by scrambler 318 to segmentation logic 326. Segmentation logic 326 partitions the digital information content into blocks for efficient storage in and transfer to a mobile playback device 212 or software player 226 and for efficient navigation during playback. Transport integrity data is generated and appended to the segmented digital information. In an alternate embodiment, portions of the segmentation process may take place before or after digital information compressor 314 and scrambler 318. Segmentation information may also be used in the header generation process by template header generator 312. The compressed, scrambled, and segmented digital information blocks are provided to the library server 260 by authoring system 280. Library server 260 assembles the segmented digital information blocks, the descrambling map 322, the preview clip(s) 324, and the template header 312 for a particular item of digital information content into a digital information program file or files, which are stored in a digital information program file storage area 262. Other raw digital

information content is converted into digital information files using the authoring system 280 in a similar manner.

Library Server

Referring again to Figure 2, the library server 260 is responsible for maintaining the digital information program files 262 created by the authoring system 280. In addition, the library server 260 receives requests for access to the digital information program files 262 from client computer systems 214 over network 240 and manages purchase and delivery of the selected digital information files and/or delivery of selected preview clips 324. The library server 260 includes library management software 261 for performing these library server functions and a library key 263 used for the authentication protocol described below. Library management software 261 includes processing logic for receiving and responding to client computer system 214 requests for access and/or purchase of a digital information program file 262. Upon receiving such a client request, library server 260 uses authorization server 270 to authenticate the request with client information 272 generated and maintained by library server 260 or authorization server 270. The client information 272 includes client identifiers which are used to target content for playback on individual mobile playback devices 212 or software players 226. Client information 272 may also contain client personal information, user content preferences, client billing history, player usage history, and player group lists. In an alternative embodiment, portions of client information 272 may instead be stored in server 260. Using the authorization protocol described in more detail below, the library server 260 determines if the client request can be serviced. If approved, the library server 260 accesses the digital information program file(s) or preview clip(s) requested by the client computer system 214, delivers the selected preview clip(s) or builds encrypted, targeted, and digitally signed digital information files using the authentication protocol described in more detail below, and transfers the encrypted and compressed digital information file(s) to the requesting client computer system 214 via network 240. Distributable mass storage media 241 may also be used as a delivery medium for the transfer of information to client system 214. The client computer system 214 may then independently download the selected digital information files (or a subset thereof) into the mobile playback device 212 for subsequent playback. The library server 260 also collects usage statistics on the access history of the digital information files 262 and stores this usage data into usage statistic storage area 264. The library server 260 also stores operating code segments (firmware) for the client browser 219, software player 226, and for mobile playback device 212. This operating code can be downloaded to the client computer system 214 in the same manner as digital information files are transferred. Player configuration data for playback device 212 and software player 226 is stored on the library server 260 and can be customized or updated in the same manner as digital information files and firmware are

transferred. Configuration data includes, but is not limited to, audio prompts, user interface options, group ID information, and information playback parameters. Player configuration data is transferred to client computer system 214, software player 226, or mobile playback device 212 as required according to client information 272.

The library server 260 interfaces with a client application program or client browser 219 executing on client computer system 214. The client browser 219 is used to make requests of library server 260 for various types of service including, but not limited to, searching the digital information files 262 for a desired program, previewing a selected preview clip associated with a digital information file 262, purchasing a selected program, requesting operating code segments or player configuration data, and downloading the purchased program or other material to the requesting client computer system 214.

The library server 260 interface with the authorization server 270 and client computer system 214 uses the unique authentication protocol and encryption protocol of the preferred embodiment of the present invention. The preferred embodiment of these protocols is described in the sections below.

Client Computer System

Referring again to Figure 2, the client computer system 214 represents a consumer or end user computer system, typically a personal computer, such as the sample system illustrated in Figure 1, with which a consumer may browse, preview, select, purchase, and take delivery of digital information content from digital information library server 260 across distribution network 240. Client computer system 214 comprises client browser software 219, a mobile device interface 221, storage for encrypted and compressed digital information files 220 downloaded from the network 240, software player 226, and segment download data 222 derived from digital information files 220 for defining the storage segments in mobile playback device 212 and for assisting in the downloading of digital information files 220 from client computer system 214 to mobile playback device 212. Client computer system 214 also includes a server public key 215 used for authenticating digital information and software files received from server 260. Client browser software 219 provides the control logic with which the client or consumer accesses and purchases titles from the digital information library 262 of library server 260. Client browser software 219 also provides control logic which requests and downloads configuration information or operating code from server 260. The client browser software 219 can be configured to perform these operations without direct human intervention. The mobile device interface 221 is a software interface used to control the transfer of control information, operating code, and digital information files from client computer system 214 to mobile playback device 212. Encrypted and compressed digital information files 220 are received by client computer system 214 from library

server 260 over network 240. In an alternate embodiment, distributable mass storage media 241 is used instead of network 240 to transfer information to client computer system 214. The software player 226 is a software module used to emulate the operation of mobile playback device 212 and for playing digital information files through the sound circuitry 130 and audio output device 132 of client computer system 214. Operating code and configuration information for the software player 226 can be downloaded or updated from the server 260 in the same manner as the mobile playback device 212 can be downloaded or updated. The software player 226 functionality is the equivalent of the functionality and operation of the mobile playback device 212. Thus, the use of the term "player" throughout this document generally applies to both the mobile playback device 212 and software player 226. Software players 226 are assigned unique player IDs and can be assigned group IDs that function similarly to IDs assigned to mobile playback devices 212.

Mobile Playback Device

The mobile playback device 212 converts a digital information file into sound or displayable imagery which is played through audio output means or displayed on a display device. In the preferred embodiment, the mobile playback device 212 is a minimal capability, low-cost device primarily dedicated to playing audio files or displaying visual images or text on a display device. The mobile playback device 212 is minimally configured to retain its light-weight, low cost, and readily mobile features. The preferred embodiment does not therefore include the use of a portable personal computer or laptop computer as the mobile playback device 212; because, such general purpose computing devices typically do not meet the light-weight and low cost constraints of the preferred mobile playback device 212. Such general purpose computing devices typically have unnecessary functionality, more complicated interfaces, and may suffer cost and performance penalties in comparison to the special purpose mobile playback device 212. In the preferred embodiment, the mobile playback device 212 includes a processor, memory, and an interface to client computer system 214 over which compressed digital information files 216 are received. As described in more detail below, mobile playback device 212 also includes a player ID 223, group IDs 225, and server public key 215 used for authenticating digital information and software files received from server 260 via client computer system 214. The user controls the mobile playback device 212 using buttons and knobs provided on the device. These controls are used to navigate through digital information files 216, adjust configuration data and playback parameters, or perform other functions as directed by firmware stored in playback device 212. When coupled to the player, client computer system 214 or other electronic devices can solicit user input from these controls. In an alternative embodiment, a set of additional user controls is provided on a remote control unit that is coupled to the player via a wired or wireless connection. Digital information output may be provided via a headphone jack, on board speaker, or wireless transmitter to a

separate wireless receiver with speakers or headphones. Audio level can be adjusted with a volume knob. A wireless transmitter may contain an adjustment knob to adjust the transmission frequency or other transmission parameters. Visual information output is provided via LCD display, LED display, or outputs to a standard visual display device. The mobile playback device 212 contains a limited quantity of non-volatile memory, RAM, and ROM. Digital information content, configuration data, and operating code are stored in the memory space of the mobile playback device 212. Configuration data includes but is not limited to: public and private IDs, content playback parameters, and user interface parameters. The use of non-volatile memory allows portions of the digital information content, configuration data, and firmware to be updated via download. Both digital information content and firmware (operating software) is stored in this memory device. Portions of the firmware and configuration information are stored permanently in a read only memory (ROM). An internal memory allocation method is used to track the content of mobile playback device 212 memory. This allocation method, in conjunction with segment navigation data 218, also provides the means for locating desired digital information, program, configuration data, or header data resident in the mobile playback device 212 memory. The mobile playback device 212 includes an interface to the client computer system 214 through which the mobile playback device 212 receives compressed digital information files 216, software updates, and configuration changes from client computer system 214.

Downloading Digital Information Content, Software Updates, or Configuration Information From the Library Server to the Client Computer System

The client browser software 219 of client computer system 214 operates in cooperation with library management software 261 of library server 260 and the firmware resident on the mobile playback device 212 to provide a means by which a consumer may browse, preview, select, purchase, and take delivery of selected digital information content from digital information library server 260 across distribution network 240. The digital information content is typically downloaded to the client computer system 214 at the time of purchase, but it is possible to download digital information content either, 1) sometime after the purchase, or 2) multiple times after an initial purchase. The client browser 219 can be configured to download content to client computer system 214 without user intervention. In addition, portions of the client computer system 214 software itself or mobile playback device 212 resident software/firmware may be downloaded or updated from library server 260. The mobile playback device 212 resident software/firmware is downloaded through client computer system 214. If library server 260 has an updated or more recent copy of client computer system 214 software or mobile playback device 212 software/firmware, the library server copy is downloaded to replace the outdated version of the corresponding client computer system 214 software or mobile playback device software 212.

The software is encrypted, scrambled, and digitally signed in a manner similar to the scrambling and delivery of the digital information files. Changes to the ID list, audio prompts, and other configuration data for playback device 212 can be downloaded in a manner similar to the downloading of software updates from library server 260.

The preferred embodiment utilizes three authentication processes to protect the transfer of information from server 260 to client system 214 and playback device 212. First, a point-to-point authentication protocol is performed whereby the library server 260 must verify that the requesting client computer system 214 is an authorized client and the client computer system 214 must verify that the library server 260 is an authorized provider. Secondly, a targeting protocol is performed whereby the library server 260 utilizes a set of identifiers (i.e. player IDs) for mobile playback devices 212 authorized to receive the selected download data from library server 260. The mobile playback device identifiers are provided by client computer system 214 or are referenced from user profiles stored on library server 260. In the targeting process, library server 260 formats and downloads data that can only be read by mobile devices 212 with these identifiers. Thirdly, a library server digital signature is appended to the downloaded data for use by the mobile playback device 212 to verify that the downloaded data was originated by an authorized library server. These three authentication processes of the present invention are described in detail in the following sections.

Point-to-Point Authentication Protocol

The library server 260, client computer system 214, and mobile playback devices 212 each have a unique verification sequence which is used to verify the authenticity of another system. In communications between library server 260 and client system 214, both systems alternately act to (1) request verification of the other system and (2) provide an authenticating response to a verification request. Communication between mobile devices 212 and client computer system 214 use a similar authentication protocol, as well as real-time communication between mobile devices 212 and library server 260 via client system 214. This verification sequence comprises a pre-defined set of bit streams or data structures which are sent by the requesting system (i.e. the system requesting verification) to the receiving system being authenticated (i.e. the respondent) in a point-to-point transmission. The receiving system must respond to the verification sequence in a pre-defined manner by sending particular response bit streams or data structures to the requesting system. If the appropriate response data from the respondent is received by the requesting system, the system being verified is considered an authorized system. Conversely, the system being verified is considered unauthorized if the appropriate response data is not received by the requesting system prior to a pre-defined time-out period. Both systems begin communication by acting as requesters and respondents in separate verification cycles. Upon completion of these

point-to-point authentication cycles, further client/server processing only continues if both systems deem each other to be authorized systems.

In an alternate embodiment, point-to-point authentication is used in a subset of the communications among library server 260, client computer system 214, and mobile playback devices 212. In another embodiment, point-to-point authentication is not used and system security rests on the use of targeting and/or digital signature authentication.

Targeting Protocol

The targeting protocol of the present invention is a means and method for limiting the playback of digital information content, the adjustment of player configuration data, and the download of player operating code to a specified player 212/226 or a specified set of mobile playback devices 212. Each player 212/226 contains a unique player ID 223. The player ID 223 comprises a public player ID and a private player ID. The public player ID is a unique identifier and serves as a serial number for player identification. The private player ID is used to target data for individual mobile playback devices 212. Private player IDs are never sent through any communications link or network path, except during installation. In the preferred embodiment, private player IDs should be sufficiently diverse, but need not be unique.

Mobile playback devices 212 may be logically grouped together using a Group ID. Digital information content, software, or configuration data changes may be targeted to a group of mobile playback devices 212 defined by a group ID. Each player 212/226 includes memory space for storage of one or more group IDs 225 of which the particular player 212/226 is a member. Each group ID includes a public portion and a private portion, each of which is equivalent to the public and private player IDs, respectively. Each group is identified by a uniquely valued public ID that is not shared with other player or group IDs. Digital information content, software, or configuration data can be targeted to a particular group ID in the same way as it would be targeted for a specific player ID. Mobile playback devices 212 in the same group share the same Group ID. A particular Group ID is pre-defined as the global group to which all mobile playback devices 212 are a member. Mobile playback devices 212 may be members of more than one group. A particular player 212/226 is added to a new group by appending the new group ID to the set of group IDs 225 maintained in the particular player 212/226. The new group ID is appended after the server 260 provides a public group ID and a group key to the player 212/226 via client computer system 214. The player 212/226 generates a private group ID from the combination of the group key and the mobile playback device's 212 private player ID. As with the private player ID, the private group ID is never sent through any communications link or network path, except during installation. In an alternative embodiment, players receive the group private ID directly or by combining the group key with the players public ID or other known numeric value. In another

alternative embodiment, the private group ID is not used in the targeting process and is not transferred to the player. The group assignment process may be restricted to using real-time communications between server 260 and the player via client system 214, or it may take place sometime after group assignments have been downloaded to client system 214. Having described the player IDs and group IDs defined in the present invention, the use of these IDs in the targeting protocol is described next.

Library server 260 includes a player ID table 266 as shown in Figure 2. Player ID table 266 includes a storage area for private IDs and public IDs. The private IDs are pre-loaded into player table 266 when a new mobile playback device is installed into the system or when a new group is established. In another embodiment, ID table 266 is a mathematical function which converts group or player public IDs. Public player and group IDs are sent by a client computer system 214 to the server 260 when the client computer system 214 desires to target a particular player 212/226 or set of mobile playback devices 212 to a particular specified digital information, software content, or configuration data selection. Digital information selection is made from the files 262 stored on library server 260. Software or configuration data selection is made from files stored on server 260 or from data generated upon request by server 260. Software content and configuration data is prepared and scrambled in a manner similar to the authoring process for digital information content. Once an association is made by client computer system 214 between a set of targeted public IDs and the associated data to be transferred from server 260, library server 260 creates a targeted header for the selected files. The library management software 261 consults the public ID to private ID table 266 to locate the corresponding targeted private ID(s). The targeted header comprises a combination of the descrambling map 322 from the selected files with the private player IDs corresponding to the targeted mobile playback devices 212. The descrambling map 322 is thereby encrypted using the secret IDs of the targeted mobile playback device(s) 212. This targeted header is linked with the corresponding digital information or software content of the selected file in a network transport ready data block. A digital signature is applied to the data block as described below in connection with the data signature protocol. Transport integrity data (such as the use of checksums or cyclic redundancy check) is applied to the data block and the data block is sent to the client computer system 214 via network 240. Because the data block can only be unscrambled using the corresponding descrambling block 322 in its header and because the descrambling block 322 was combined (i.e. encrypted) with a private ID known only by the targeted mobile playback device(s) 212, only the targeted mobile playback device(s) 212 will be able to unscramble and read the data block. The selected digital information, software content, and configuration data is thereby targeted to a particular set of mobile playback devices 212.

For small groups of mobile playback devices 212, each targeted header of a digital

information file may contain a plurality of descrambling maps, each associated with a different player 212/226. In this manner, multiple mobile playback devices 212 can read a single file 220 stored on the client computer system 214.

A person of ordinary skill in the art will note that alternative methods of targeting exist. In an alternative embodiment, library server 260 uses the targeted recipient's private player 212/226 identifier or the targeted group's private group identifier to generate scrambling map 316. Descrambling map 322 is not stored with the file as it is already known by the recipient player or group. This method targets content to a single player 212/226 or group and achieves the identical result of preventing unauthorized playback of content.

In another alternative embodiment, library server 260 does not scramble the digital information content or uses a known key to scramble the digital information content. In this embodiment, descrambling map 322 is unnecessary and is not stored with the file. Either the public or private player 212/226 identifier can be stored in the header for targeting identification purposes. Upon receipt of data from library server 260, the player 212/226 checks if its player 212/226 identifier or group identifier is included in the header. This method assumes unmodified mobile playback devices 212 and achieves the identical result of preventing unauthorized playback of content.

In another alternative embodiment, the player IDs for the targeted mobile playback devices 212 are sent to the library server 260 by the client computer system 214 when the user registers with the library server 260 to obtain the user's client ID. In this alternative embodiment, these player IDs are stored on the library server 260 in a user profile. In this embodiment, the library server 260 manages the player IDs for the targeted mobile playback devices 212.

Digital Signature Protocol

The third authentication protocol used in the present invention is the digital signature protocol. For selected data blocks generated by library server 260 and downloaded to a client computer system 214, library server 260 uses its private library key 263 to apply a digital signature to the data block. The digital signature comprises a known bit string or data pattern which is combined with the data in data blocks that are downloaded from library server 260 to client computer system 214. The library server 260 may perform this operation on all the data blocks or a selected subset of the data blocks. After a data block is downloaded to a player 212/226 through a client computer system 214, the player 212/226 can retrieve the digital signature applied by the library server 260 using a public server key known to the player 212/226. The player 212/226 can thereby verify that the data block originated with an authorized library server 260. The public server key is also known to client computer system 214, which can perform the identical operation to verify that the data block originated with an authorized library

server 260. In this embodiment, library server 260 performs signatures on the content. A person of ordinary skill in the art would realize that the signatures may also be performed on the digital information by authoring system 280. The signatures may also be performed in a multiple step process shared by authoring system 280 and library server 260.

In an alternate embodiment, digital signatures are applied to downloaded material by a trusted client computer system 214. In another alternate embodiment, digital signatures are not applied to downloaded material and system security rests on the use of targeting and/or point-to-point authentication.

Downloading Digital Information Content, Software Updates, or Configuration Information From the Client Computer System to the Mobile Playback Device

In a first step, the client computer system 214 and the mobile device use the point-to-point authentication protocol described above to verify that an authorized mobile playback device 212 is communicating with an authorized client computer system 214. If this is the case, the mobile playback device 212 transmits its memory map to the client computer system 214 via the mobile device interface 221. A table of contents defining the available digital information files 220 and player configuration profiles resident in client computer system 214 is displayed along with the mobile playback device 212 memory map for a user of client computer system 214. The user selects which files 220 of client computer system 214 should replace portions or segments of specified mobile playback device 212 memory as defined by the mobile playback device 212 memory map. Alternately, client browser 219 can be configured to automatically perform this selection process. In either case, the user is prevented from selecting digital information content larger than the available memory of playback device 212. In addition, control software and/or configuration data for playback device 212 may be automatically updated by client computer 214. The specified digital information files 220, associated headers, operating code, or configuration data are thereafter downloaded into mobile playback device 212 memory. The mobile playback device 212 uses checksums to verify the integrity of the download. The mobile playback device 212 uses the server public key 215, the header, and the digital signature to authenticate the download as described above. The header descrambling map is used by targeted mobile playback devices 212 to unscramble the downloaded data. In other embodiments, mobile playback device 212 may unscramble the downloaded data and/or decompress the downloaded data before authenticating the signature. Each segment of the digital information content may be independently authenticated and validated using any of the techniques described above. Digital information prompts on the mobile playback device 212 guide the user to the desired portion of the

downloaded digital information content as specified by the table of contents residing in the header of the downloaded data. The user may preview selected portions of the digital information content by selecting a preview option. The preview option plays a predetermined portion of a selected digital information program. Upon selection of a particular digital information program, the selected digital information program is played for the user after the mobile playback device 212 converts the digital information content into sound or displayable imagery which is played through an audio output means or displayed on a display device.

The software player 226 of client computer system 214 may also receive digital information content in approximately the same form as the digital information content downloaded to the mobile playback device 212; however, the digital information content for the software player 226 does not need to be downloaded to the software player 226. The software player 226 has direct access to the digital information content; because, it shares memory and/or disk storage space with the client computer system 214. Therefore, there are no downloading or memory map concerns. In the same manner as the mobile playback device 212, the software player 226 performs digital signature verification, verification of checksums, and receiving targeted information. In an alternative embodiment, software player 226 may use a communication protocol similar to that of mobile playback device 212 when receiving digital information content, configuration information, and dynamically downloaded software.

Figure 4 illustrates an alternative embodiment of the present invention. As shown in Figure 4, authoring system 280 can support a plurality of library servers 260. Each library server can be configured to support a specific type of digital information content. In the same manner described above, the client computer systems 214 access network 240 and obtain digital information content from any of the library servers 260 after performing the authentication process described above. Authorization server 270 is provided for this purpose. The configuration illustrated in Figure 4 provides a more distributed architecture thereby dispersing the load across several server platforms. A site with many client computer systems 214 may have its own library server 260 to reduce demand on network 240. This architecture scales well as the number of client computer systems 214 grows and the content provided by the library server 260 grows.

Figure 5 illustrates another embodiment of the present invention except the library server 461 has been implemented as a plurality of separate processes or tasks 460 running concurrently on a single library server platform 461. Each library server process 460 services requests for access to its corresponding portion of the digital information content. This content is created using authoring system 280 in the manner described above. The authorization server 270 is used to validate the links between the client computer systems 214 and the library server processes 460. The configuration illustrated in Figure 5 is advantageous in that the convenience of a single server is maintained while the scalability of multiple libraries is also supported.

This concept can also be used for the authoring and authorization servers 280 and 270, respectively. As shown in Figure 6, the authoring system 280 and the authorization server 270 is implemented on a single platform 685 as authoring process 680 and authorization process 670. These processes perform the same functions as described above, except the implementation provides the convenience of a single server and the scalability of multiple processes for the authoring and authorization tasks.

Figure 7 illustrates yet another alternative embodiment wherein the client computer systems 214 include a local library 710. The local library 710 provides a local storage area and library access control functionality which provides access to a subset of the archived digital information from library server 260. In the manner described above, the user of a client computer system 214 identifies the titles or items of digital information in library server 260 that the user wishes to access. In the preferred embodiment, these content selections are transferred to a client storage area 220 (as shown in Figure 2) for subsequent downloading to mobile playback device 212. The embodiment shown in Figure 7 expands upon the client storage area 220 and creates a local library 710. The local library 710 is used for storage of selected content; but also for searching, sorting, categorizing, and abstracting the locally stored content. The local library 710 allows a client computer system 214 to maintain a small subset of the full library which may be used to create custom collections of content in a variety of user selected configurations. Client systems 214 may be permitted to access the contents of local libraries 710 on other client systems 214. In a related alternate embodiment, library server processes 460 may also reside on selected client systems 214. This embodiment allows client systems 214 to browse and purchase content that is scrambled, targeted, and delivered from library server process 460 executing on a locally positioned client system 214. By maintaining the library locally, a portion of the network access and transfer overhead is eliminated.

Figure 8 illustrates another alternative embodiment of the present invention wherein the client computer system 214 is eliminated and the mobile playback device 212 is connected directly to the network 240 through network interface 810. In the preferred embodiment, the mobile playback device 212 is a minimal capability device primarily dedicated to playing audio files or displaying visual images or text on a display device. The mobile playback device 212 is minimally configured to retain its light-weight, low cost, and readily mobile features. The preferred embodiment does not therefore include the use of a portable personal computer or laptop computer; because, such devices typically do not meet the light-weight and low cost constraints of the preferred mobile playback device 212. However, the minimal mobile playback device 212 may be augmented to add network interface 810 which comprises a conventional hardware connector, hardware buffers and controllers, and firmware support for a particular conventional network protocol. For example, the mobile playback device 212 may be augmented with an integrated

modem that includes a telephone jack with which the playback device may be connected to a telephone network. It will be apparent to those of ordinary skill in the art that network interface 810 may be implemented in a low cost and light-weight device such as mobile playback device 212. Because the client system browser 219 would not be available in the alternative embodiment shown in Figure 8, a simplified user interface may be provided in firmware or other non-volatile memory of mobile playback device 212 with which the user may select items of digital information for download and playback from library server 260. As described above, the authentication process to validate the link between the mobile playback device 212 and the library server 260 must also be performed prior to user access to the library server 260 content. Alternatively, a client system 814 coupled to network 240 may be provided to support client browser 219 and thereby enable selection of items of digital information for download and playback from library server 260 directly to any of the mobile playback devices 212. Client systems 814 may support local storage of digital information, software, and configuration data in a form similar to storage space 220 or local library 710. In addition, a more simplified implementation of network interface 810 may be designed to communicate via network 240 to client system 814 instead of library server 260.

In another alternative embodiment of the present invention, digital information programming selections are made using the client computer system 214 and library server 260 as described above; however, the selections are delivered on mass storage medium 241. Mass storage medium 241 represents any of a variety of conventional mass storage technologies including CD-ROM, PCMCIA cards, DVDs, floppy disks, removable hard drives, digital magnetic tape, optical cards, flash memory or other optical, magnetic, electronic, or semiconductor memory devices. Upon selection by a user of a client computer system 214, selected programming is targeted and scrambled as described above and transferred to a selected mass storage medium 241 and mailed, hand-delivered, or held for pickup by the user. Once the user takes physical possession of the selected mass storage media 241, the selected programming may be read from the mass storage medium 241 by the client browser 219 and thereafter transferred to the mobile playback device 212 as described above. Figure 9 illustrates another embodiment of the system that does not include the use of client computer 214 to transfer data to mobile playback device 212. Kiosk 910 consists of a computer system such as the one described above in Figure 1. Kiosk 910 is a publicly accessible unit that can perform browse, content purchase, and download functions in a manner equivalent to a client computer system 214. The kiosk 910 is special because it contains its own library server for fast local access and download of content. Kiosk 910 contains a mobile device interface 221, a special version of client browser 219, and local library server process 460. Kiosk library server process 460 has local storage of scrambled and compressed digital information files 262. These compressed information files 262 originate from remote authoring system 280 and may be delivered via physical transport of mass

storage media 241 or via distribution network 240. A customer operates client browser 219 to browse, select, and purchase digital information files that are delivered to the customer's mobile playback device 212. Authentication, targeting, and download processes are performed within the kiosk by library server process 460 that is connected to remote authorization server 270 over network 240. In a related embodiment, figure 7 shows a client system 214 with local library 710 that can be converted into a kiosk with functionality similar to kiosk 910. In this system, a special version of client browser 219 provides the same user functionality as the previous kiosk embodiment.

An alternate embodiment of the system uses a common communication network to connect all system components. In Figure 10, network 240 is directly coupled to client system 214 and 814, network interface(s) 810, library server(s) 260, authorization server 270, and authoring system(s) 280. One of ordinary skill in the art will realize that network 240 can also be segmented into a number of independent networks or communication links without changing the functionality of the system.

Thus, a method and apparatus for implementing a computer network based digital information library system employing authentication and encryption protocols for the secure transfer of digital information library programs, software, and configuration data to a client computer system and a mobile digital information playback device removably connectable to the client computer system is disclosed. Although the present invention has been described with respect to specific examples and subsystems, it will be apparent to those of ordinary skill in the art that the invention is not limited to these specific examples or subsystems but extends to other embodiments as well. The present invention includes all of these other embodiments as specified in the claims that follow.

CLAIMS

We claim:

1. A computer based library and information delivery system for accessing and obtaining selected digital information files, said library and information delivery system comprising:

a library server having a plurality of digital information files;

a client computer system coupled to said library server over a network; and

a mobile device removably connectable to said client computer system, said client computer system including logic for requesting a download of a selected one or more of said digital information files from said library server, said client computer system further including logic for downloading said selected one or more of said digital information files to said mobile device.

2. The library and information delivery system as claimed in Claim 1 further including an authoring system coupled to said library server for generating or modifying said plurality of digital information files.

3. The library and information delivery system as claimed in Claim 1 wherein said plurality of digital information files includes audio files, spoken audio files, visual image files, text files, video files, multimedia files, operating code files, or configuration information files.

4. The library and information delivery system as claimed in Claim 1 wherein said library server further includes library management software for interfacing with said client computer system and said plurality of digital information files.

5. The library and information delivery system as claimed in Claim 1 wherein said client computer system further includes a client browser for interfacing with said library server and for making selections of one or more of said digital information files from said library server.

6. The library and information delivery system as claimed in Claim 1 wherein said client computer system further includes a player for tangibly playing said selected one or more of said digital information files on said client computer system.

7. The library and information delivery system as claimed in Claim 1 wherein said mobile device further includes a means for tangibly playing said selected one or more of said digital information files downloaded from said client computer system.

8. The library and information delivery system as claimed in Claim 1 further including an authorization server coupled to said library server for authorizing access to said plurality of digital information files by said client computer system.

9. The library and information delivery system as claimed in Claim 1 wherein said library server is a software process running on several computer systems.

10. The library and information delivery system as claimed in Claim 2 wherein said library server and said authoring system run on different computer systems.

11. The library and information delivery system as claimed in Claim 8 wherein said library server and said authorization server run on different computer systems.

12. The library and information delivery system as claimed in Claim 1 further including an authoring system coupled to said library server for generating or modifying said plurality of digital information files, said library and information delivery system further including an authorization server coupled to said library server for authorizing access to said plurality of digital information files by said client computer system, said library and information delivery system running on a single computer system.

13. The library and information delivery system as claimed in Claim 1 further including an authoring system coupled to said library server for generating or modifying said plurality of digital information files, said library and information delivery system further including an authorization server coupled to said library server for authorizing access to said plurality of digital information files by said client computer system, said authoring system and said authorization server running on a different computer system than said library server.

14. The library and information delivery system as claimed in Claim 1 wherein said client computer system further includes a local library for local storage of a selected portion of said plurality of digital information files.

15. The library and information delivery system as claimed in Claim 1 wherein said mobile device further includes a network interface for direct communication with a network without the aid of a client computer system.

16. The library and information delivery system as claimed in Claim 1 wherein said logic for downloading further includes logic for limiting said download based on available memory of said mobile device.

17. The library and information delivery system as claimed in Claim 1 wherein said logic for downloading further includes logic for performing authentication on each segment of said digital information files downloaded to said mobile device.

18. The library and information delivery system as claimed in Claim 1 wherein said client computer system further includes logic for previewing said digital information files prior to being downloaded to said mobile device.

19. The library and information delivery system as claimed in Claim 1 further including authentication logic for authenticating access to said library, said authentication logic including a means for performing a point-to-point authentication protocol.

20. The library and information delivery system as claimed in Claim 1 further including authentication logic for authenticating access to said library, said authentication logic including a means for performing a targeting authentication protocol.

21. The library and information delivery system as claimed in Claim 1 further including authentication logic for authenticating access to said library, said authentication logic including a means for performing a digital signature authentication protocol.

22. In a computer based library and information delivery system, said library and information delivery system including a library server having a plurality of digital information files, a client computer system coupled to said library server over a network, and a mobile device removably connectable to said client computer system, a method for accessing and obtaining selected digital information files comprising the steps of:

requesting a download of a selected one or more of said digital information files from said library server; and

downloading said selected one or more of said digital information files to said mobile device.

23. The method as claimed in Claim 22 further including a step of generating or modifying said plurality of digital information files.

24. The method as claimed in Claim 22 wherein said plurality of digital information files includes audio files, spoken audio files, visual image files, text files, video files, multimedia files, operating code files, or configuration information files.

25. The method as claimed in Claim 22 further including a step of activating library management software for interfacing with said client computer system and said plurality of digital information files.

26. The method as claimed in Claim 22 further including a step of interfacing with said library server and for making selections of one or more of said digital information files from said library server.

27. The method as claimed in Claim 22 further including a step of tangibly playing said selected one or more of said digital information files on said client computer system.

28. The method as claimed in Claim 22 further including a step of tangibly playing said selected one or more of said digital information files downloaded from said client computer system.

29. The method as claimed in Claim 22 further including a step of authorizing access to said plurality of digital information files by said client computer system.

30. The method as claimed in Claim 22 further including the steps of generating or modifying said plurality of digital information files, and authorizing access to said plurality of digital information files by said client computer system, said library and information delivery system running on a single computer system.

31. The method as claimed in Claim 22 further including a step of locally storing a selected portion of said plurality of digital information files.

32. The method as claimed in Claim 22 further including a step of directly communicating with a network without the aid of a client computer system.

33. The method as claimed in Claim 22 further including a step of limiting said download based on available memory of said mobile device.

34. The method as claimed in Claim 22 further including a step of performing authentication on each segment of said digital information files downloaded to said mobile device.

35. The method as claimed in Claim 22 further including a step of previewing said digital information files prior to being downloaded to said mobile device.

36. The method as claimed in Claim 22 further including a step of performing a point-to-point authentication protocol.

37. The method as claimed in Claim 22 further including a step of performing a targeting authentication protocol.

38. The method as claimed in Claim 22 further including a step of performing a digital signature authentication protocol.

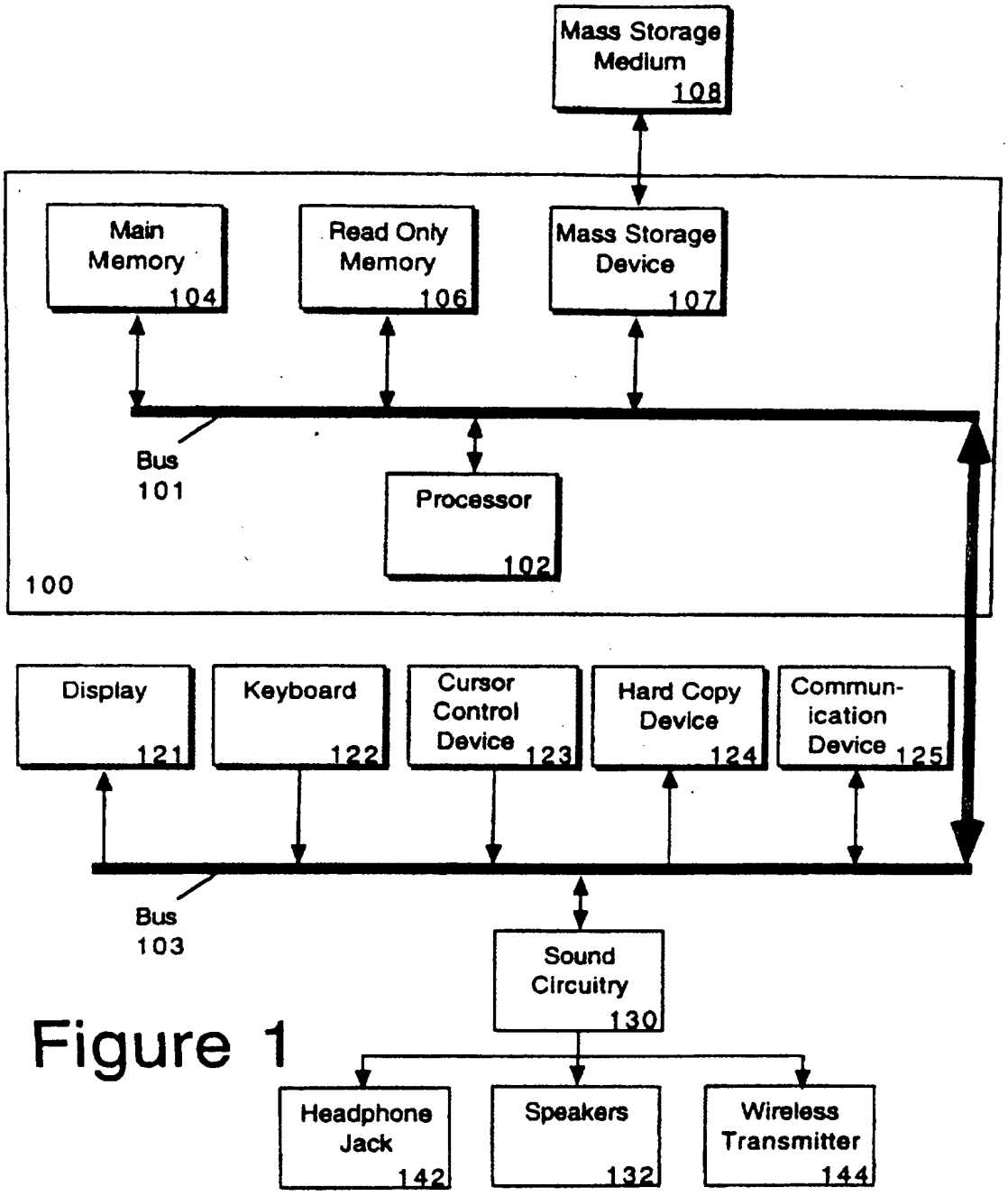
Mass Storage Medium 108
Main Memory 104
Read Only Memory 106
Mass Storage Device 107
Bus 101
Processor 102
100
Display 121
Keyboard 122
Cursor Control Device 123
Hard Copy Device 124
Commun-ication Device 125
Bus 103
Sound Circuitry 130
Headphone Jack 142
Speakers 132
Wireless Transmitter 144

Figure 1

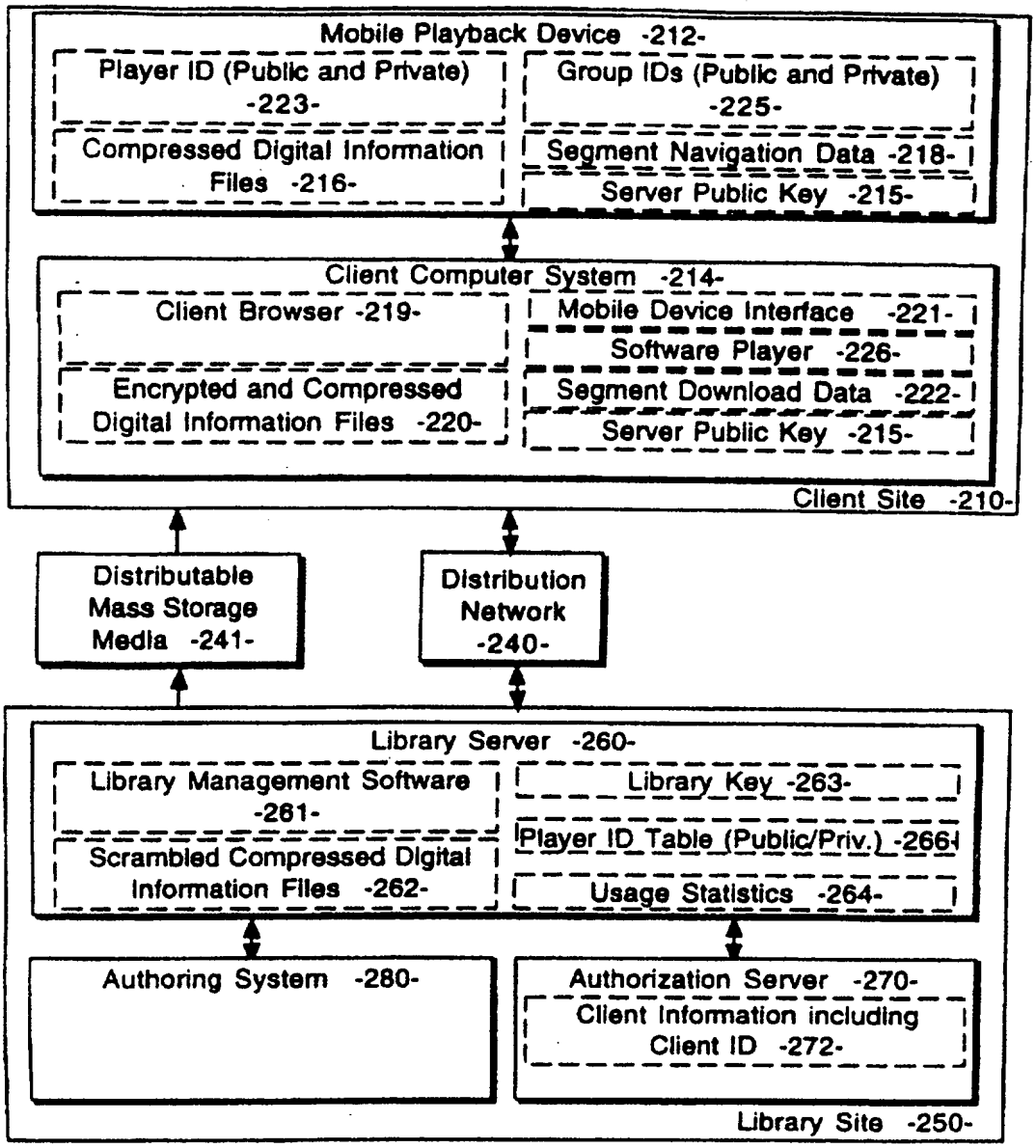
Mobile Playback Device -212-
Player ID (Public and Private) -223-
Group IDs (Public and Private) -225-
Compressed Digital Information Files -216-
Segment Navigation Data -218-
Server Public Key -215-
Client Computer System -214-
Client Browser -219-
Mobile Device Interface -221-
Software Player -226-
Encrypted and Compressed Digital Information Files -220-
Segment Download Data -222-
Server Public Key -215-
Client Site -210-
Distributable Mass Storage Media -241-
Distribution Network -240-
Library Server -260-
Library Management Software -261-
Library Key -263-
Player ID Table (Public/Priv.) -266-
Scrambled Compressed Digital Information Files -262-
Usage Statistics -264-
Authoring System -280-
Authorization Server -270-
Client Information including Client ID -272-
Library Site -250-

Figure 2

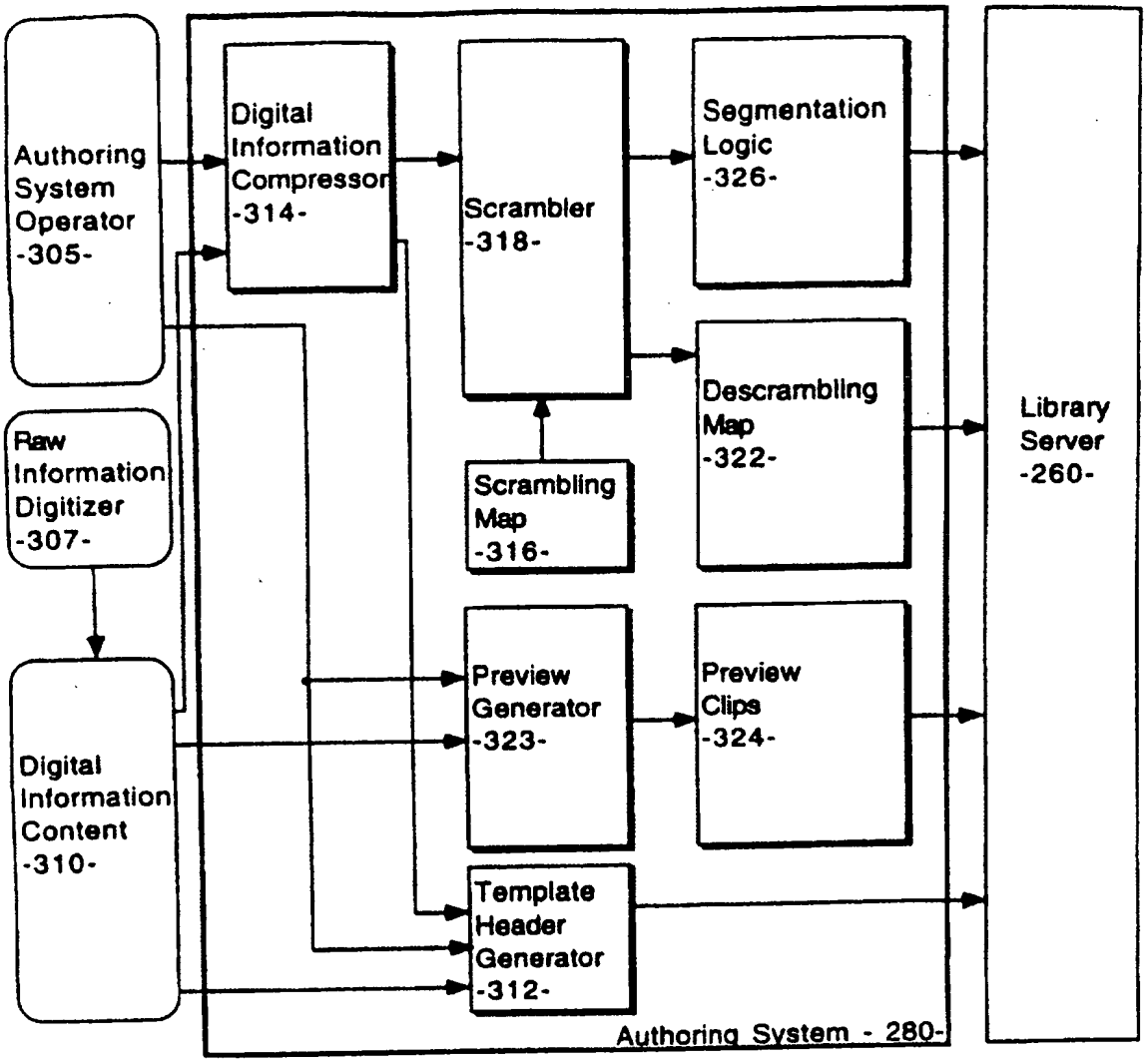
Authoring System Operator -305-
Digital Information Compressor -314-
Scrambler -318-
Segmentation Logic -326-
Descrambling Map -322-
Library Server -260-
Raw Information Digitizer -307-
Scrambling Map -316-
Digital Information Content -310-
Preview Generator -323-
Preview Clips -324-
Template Header Generator -312-
Authoring System - 280-

Figure 3

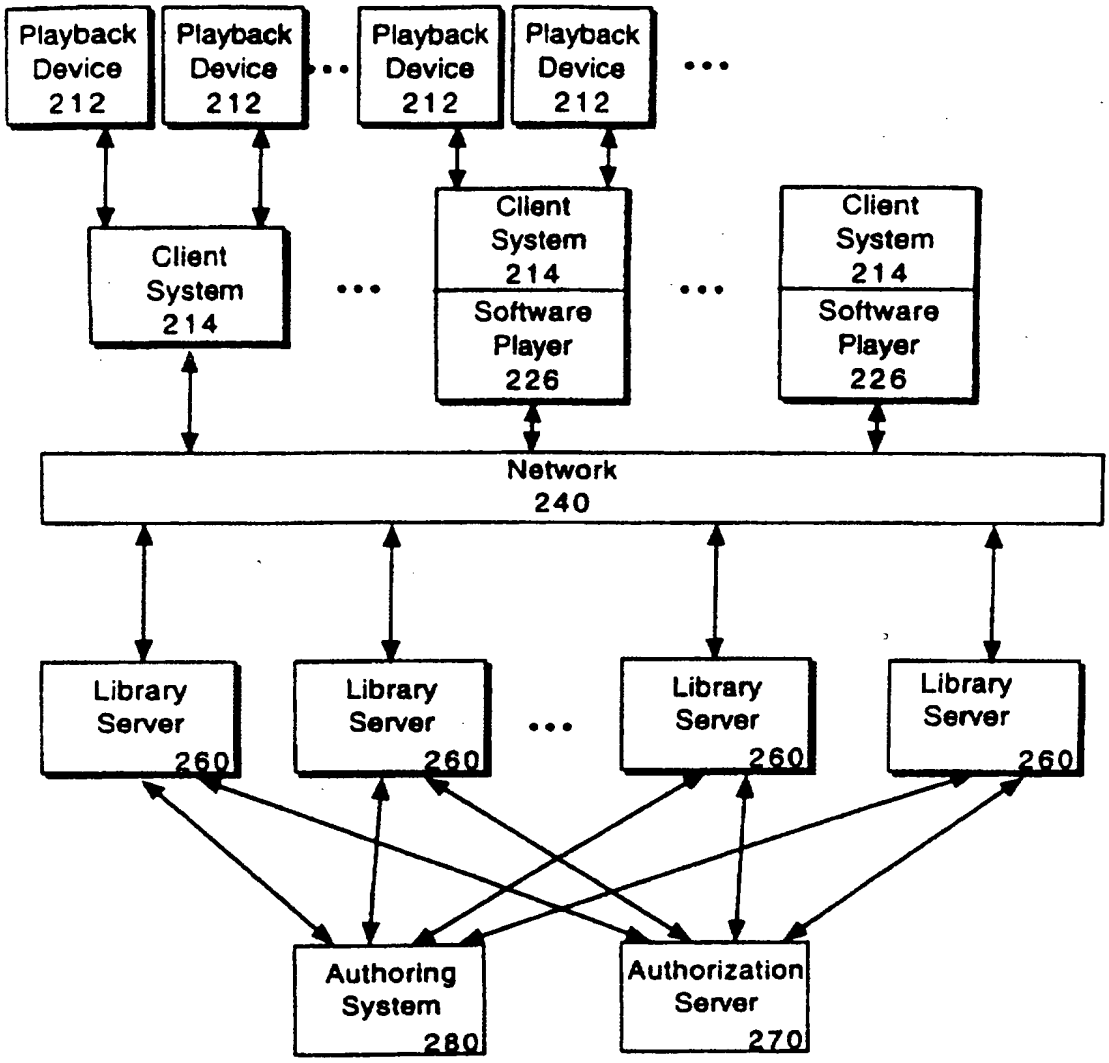
Playback Device 212
Playback Device 212
Playback Device 212
Playback Device 212
Client System 214
Client System 214
Software Player 226
Client System 214
Software Player 226
Network 240
Library Server 260
Library Server 260
Library Server 260
Library Server 260
Authoring System 280
Authorization Server 270

Figure 4

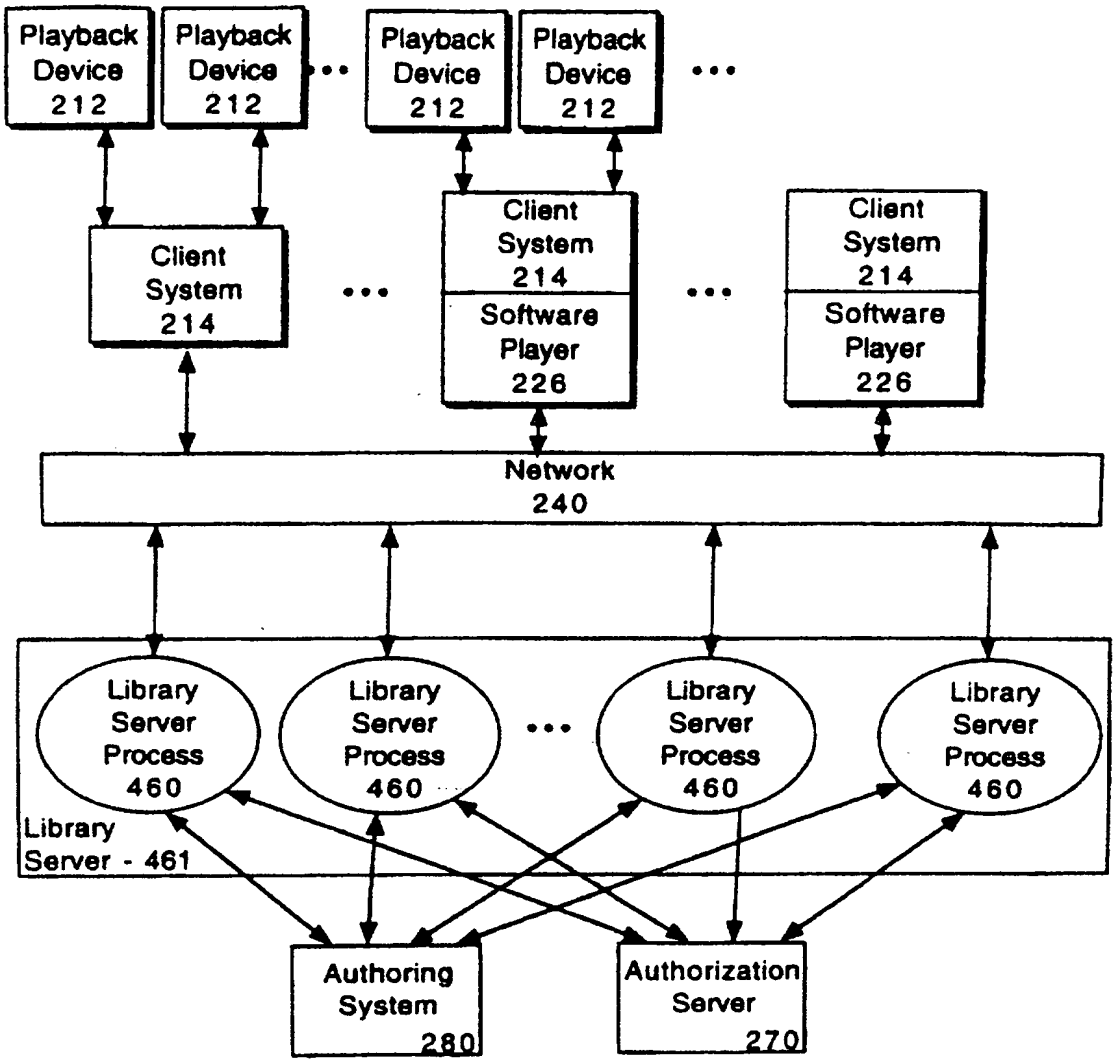
Playback Device 212
Playback Device 212
Playback Device 212
Playback Device 212
Client System 214
Client System 214
Software Player 226
Client System 214
Software Player 226
Network 240
Library Server Process 460
Library Server Process 460
Library Server Process 460
Library Server Process 460
Library Server - 461
Authoring System 280
Authorization Server 270

Figure 5

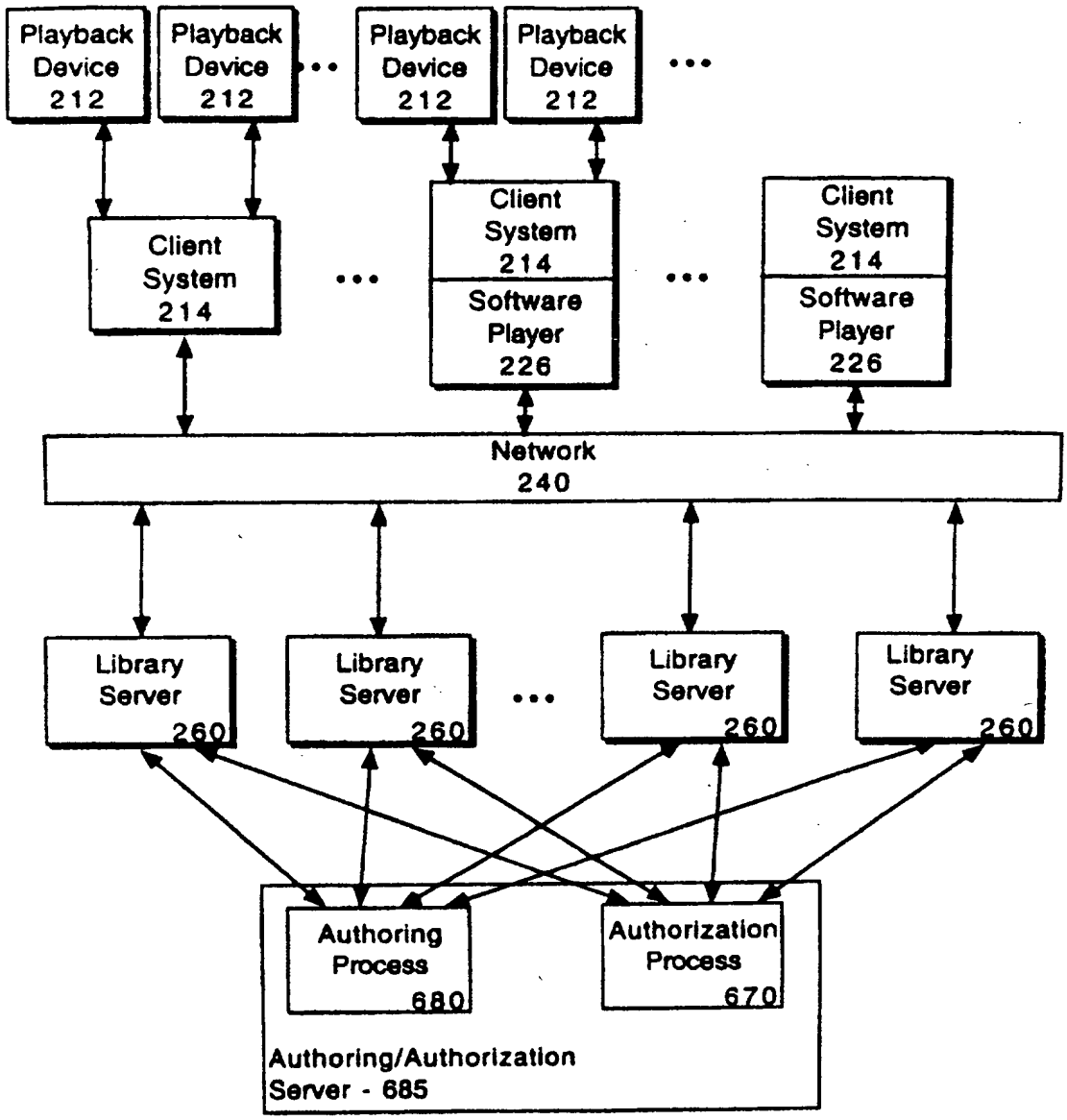
Playback Device 212
Playback Device 212
Playback Device 212
Playback Device 212
Client System 214
Client System 214
Software Player 226
Client System 214
Software Player 226
Network 240
Library Server 260
Library Server 260
Library Server 260
Library Server 260
Authoring Process 680
Authorization Process 670
Authoring/Authorization Server - 685

Figure 6

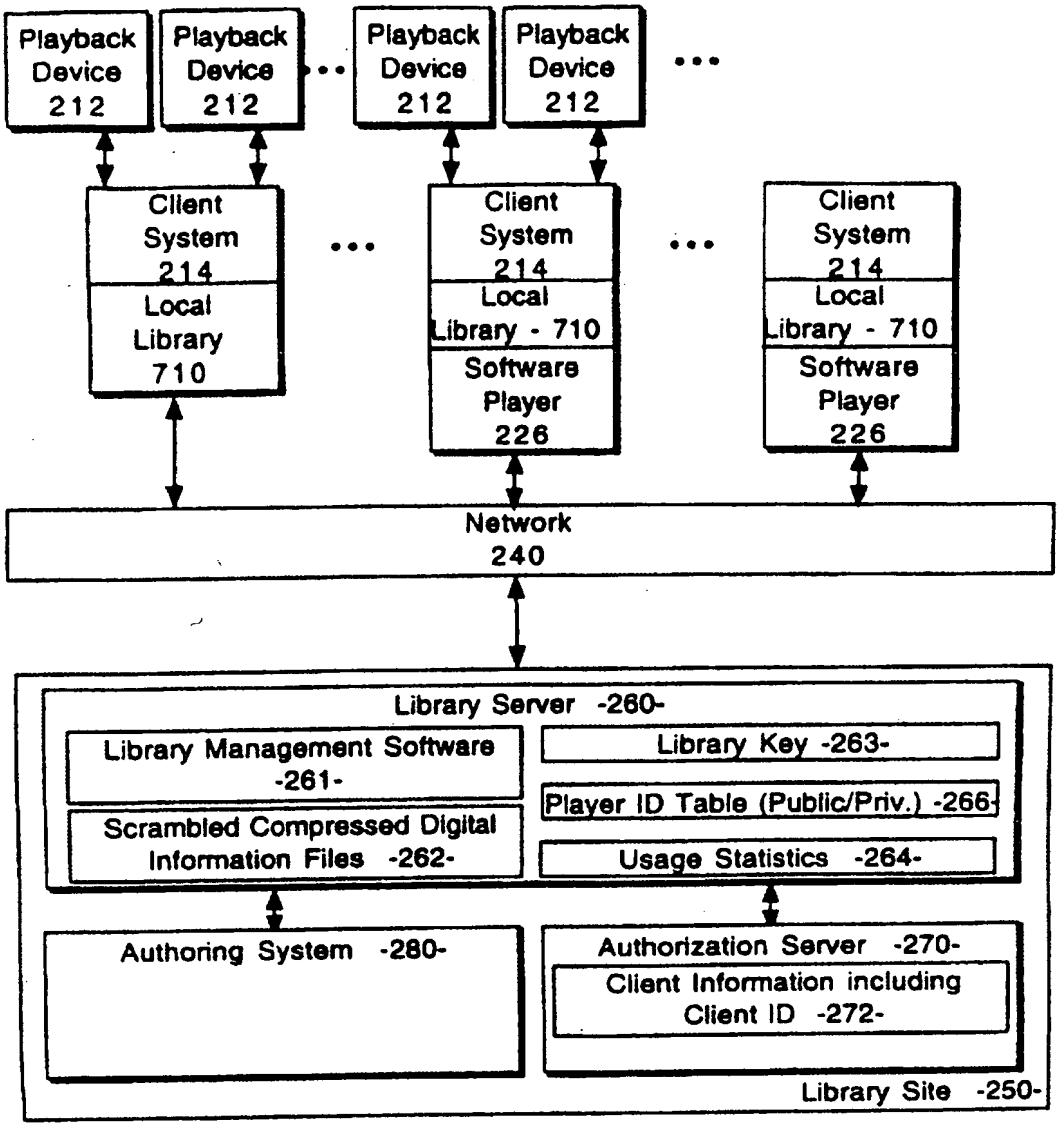
Playback Device 212
Playback Device 212
Playback Device 212
Playback Device 212
Client System 214
Local Library 710
Client System 214
Local Library - 710
Software Player 226
Client System 214
Local Library - 710
Software Player 226
Network 240
Library Server -260-
Library Management Software -261-
Scrambled Compressed Digital Information Files -262-
Library Key -263-
Player ID Table (Public/Priv.) -266-
Usage Statistics -264-
Authoring System -280-
Authorization Server -270-
Client Information including Client ID -272-
Library Site -250-

Figure 7

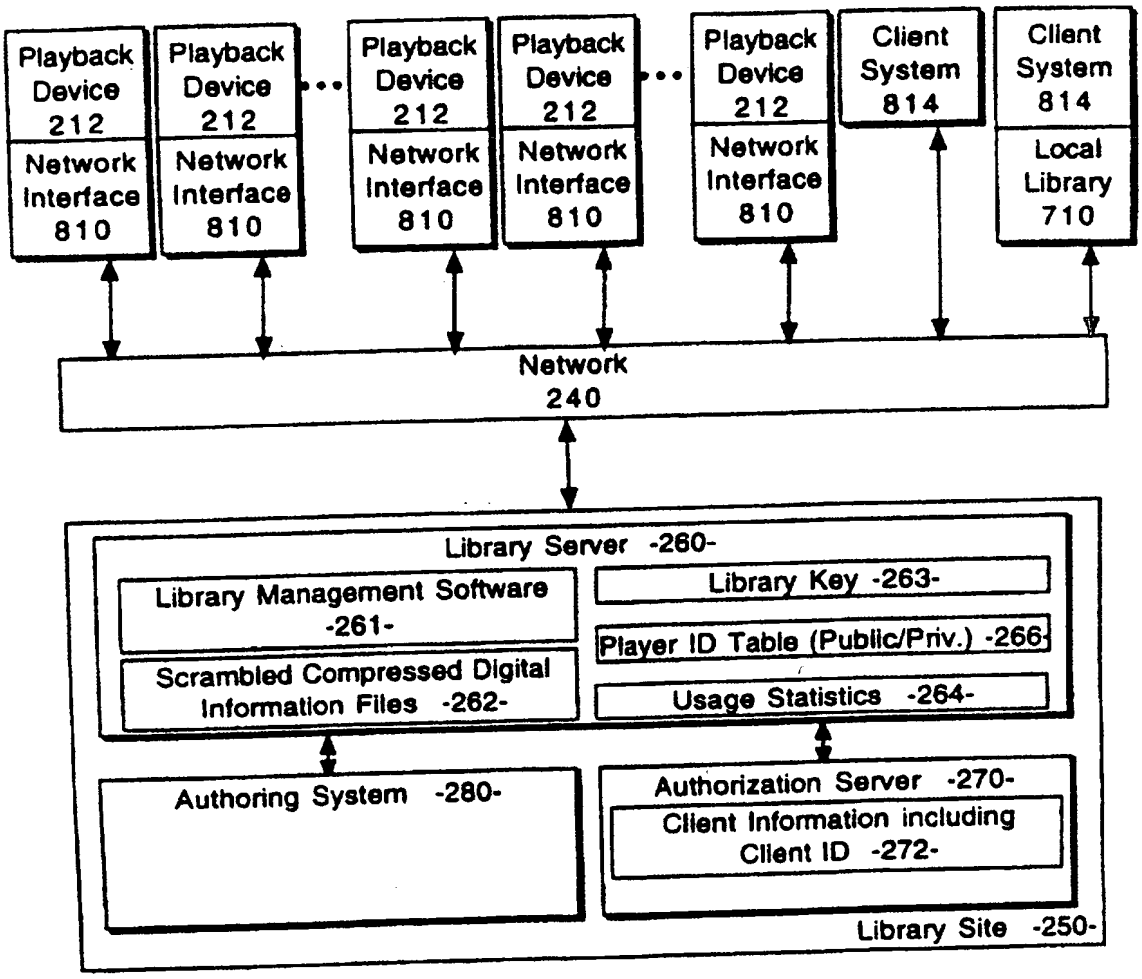
Playback Device 212
Network Interface 810
Playback Device 212
Network Interface 810
Playback Device 212
Network Interface 810
Playback Device 212
Network Interface 810
Playback Device 212
Network Interface 810
Client System 814
Client System 814
Local Library 710
Network 240
Library Server -260-
Library Management Software -261-
Scrambled Compressed Digital Information Files -262-
Library Key -263-
Player ID Table (Public/Priv.) -266-
Usage Statistics -264-
Authoring System -280-
Authorization Server -270-
Client Information including Client ID -272-
Library Site -250-

Figure 8

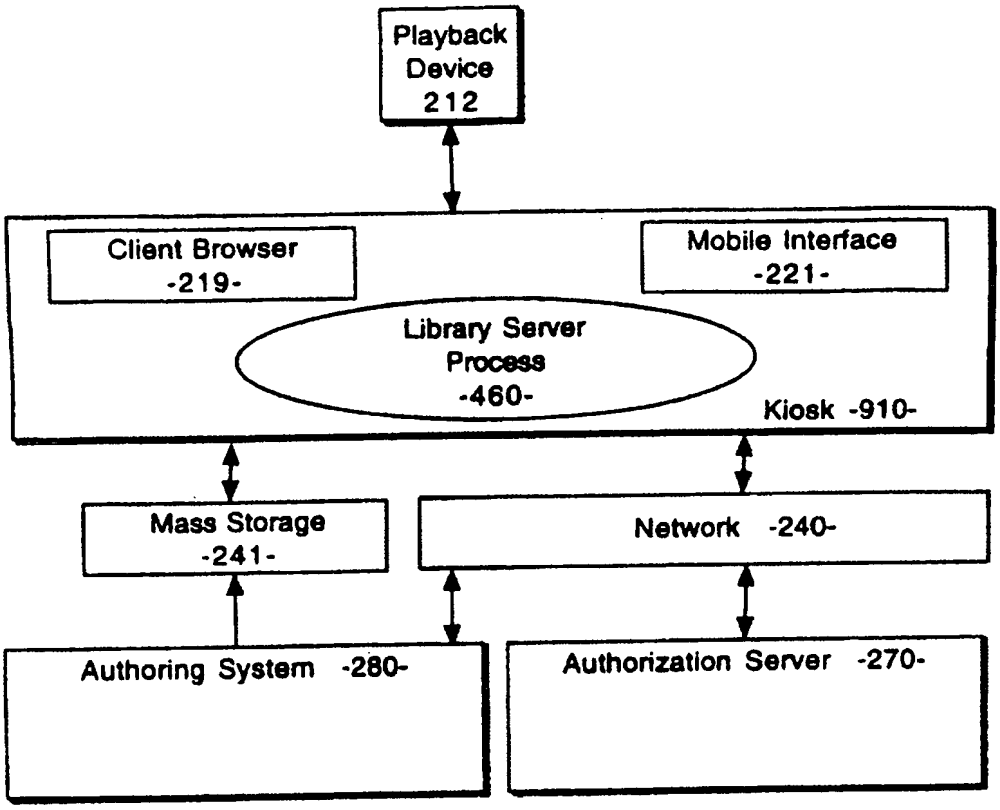
Playback Device 212
Client Browser -219-
Mobile Interface -221-
Library Server Process -460-
Kiosk -910-
Mass Storage -241-
Network -240-
Authoring System -280-
Authorization Server -270-

Figure 9

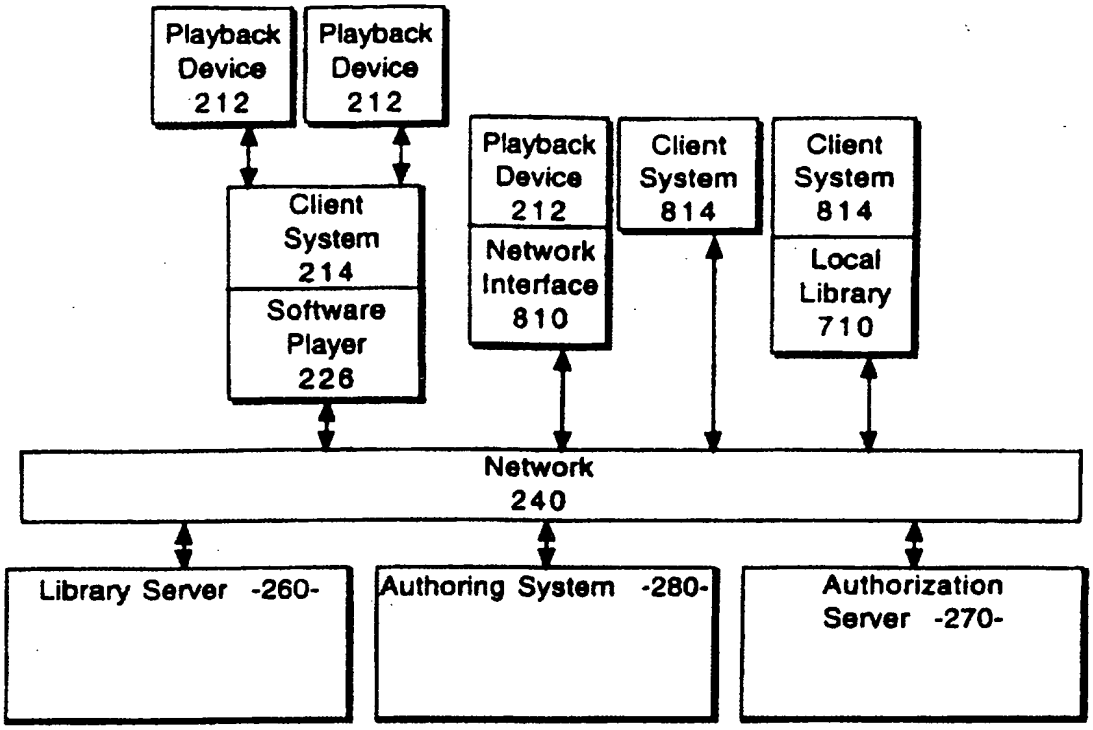
Playback Device 212
Playback Device 212
Client System 214
Software Player 226
Playback Device 212
Network Interface 810
Client System 814
Client System 814
Local Library 710
Network 240
Library Server -260-
Authoring System -280-
Authorization Server -270-

Figure 10

INTERNATIONAL SEARCH REPORT

International application No.
PCT/US97/16184

A. CLASSIFICATION OF SUBJECT MATTER

IPC(6) :G06F 13/00; H04M 11/00
US CL : 395/200.47, 200.49; 705/26
According to International Patent Classification (IPC) or to both national classification and IPC

B. FIELDS SEARCHED

Minimum documentation searched (classification system followed by classification symbols)

U.S. : 395/200.31, 200.32, 200.47, 200.48, 200.49; 345/327, 156, 169; 705/26, 27

Documentation searched other than minimum documentation to the extent that such documents are included in the fields searched

Electronic data base consulted during the international search (name of data base and, where practicable, search terms used)

Please See Extra Sheet.

C. DOCUMENTS CONSIDERED TO BE RELEVANT

Category*	Citation of document, with indication, where appropriate, of the relevant passages	Relevant to claim No.
Y	US 5,440,336 A (BUHRO et al.) 08 August 1995, col.4 lines 49-60.	1-38
Y,P	US 5,634,080 A (KIKINIS et al.) 27 May 1997, fig.47, 48	1, 22
Y,P	US 5,579,471 A (BARBER et al) 26 November 1996. col.3 lines 39-68.	5-9 18, 25-28
A	RAMANATHAN ET AL. "Architectures for personalized multimedia", IEEE Multimedia, 1994, all	1-38
Y	DESMEDT ET AL. "Multi-receivier / Multi-sender network security", INFOCOM '92, p.2045-2054	19-21, 35-38

☐ Further documents are listed in the continuation of Box C. ☐ See patent family annex.

* Special categories of cited documents:

"A" document defining the general state of the art which is not considered to be of particular relevance

"B" earlier document published on or after the international filing date

"L" document which may throw doubts on priority claim(s) or which is cited to establish the publication date of another citation or other special reason (as specified)

"O" document referring to an oral disclosure, use, exhibition or other means

"P" document published prior to the international filing date but later than the priority date claimed

"T" later document published after the international filing date or priority date and not in conflict with the application but cited to understand the principle or theory underlying the invention

"X" document of particular relevance; the claimed invention cannot be considered novel or cannot be considered to involve an inventive step when the document is taken alone

"Y" document of particular relevance; the claimed invention cannot be considered to involve an inventive step when the document is combined with one or more other such documents, such combination being obvious to a person skilled in the art

"&" document member of the same patent family

Date of the actual completion of the international search	Date of mailing of the international search report
25 NOVEMBER 1997	30 JAN 1998
Name and mailing address of the ISA/US Commissioner of Patents and Trademarks Box PCT Washington, D.C. 20231 Facsimile No. (703) 305-3230	Authorized officer DUNG DINH Telephone No. (703) 305-9600

Form PCT/ISA/210 (second sheet)(July 1992)★

B. FIELDS SEARCHED
Electronic data bases consulted (Name of data base and where practicable terms used):

APS
(online or library or demand) and (mobile or portable) and server and client and authoriz?

Proquest IEEE Publications OnDisc
authentication
digitial signature

This Page is Inserted by IFW Indexing and Scanning Operations and is not part of the Official Record

BEST AVAILABLE IMAGES

Defective images within this document are accurate representations of the original documents submitted by the applicant.

Defects in the images include but are not limited to the items checked:

- ☐ BLACK BORDERS
- ☐ IMAGE CUT OFF AT TOP, BOTTOM OR SIDES
- ☑ FADED TEXT OR DRAWING
- ☑ BLURRED OR ILLEGIBLE TEXT OR DRAWING
- ☐ SKEWED/SLANTED IMAGES
- ☐ COLOR OR BLACK AND WHITE PHOTOGRAPHS
- ☐ GRAY SCALE DOCUMENTS
- ☐ LINES OR MARKS ON ORIGINAL DOCUMENT
- ☐ REFERENCE(S) OR EXHIBIT(S) SUBMITTED ARE POOR QUALITY
- ☐ OTHER: _____

IMAGES ARE BEST AVAILABLE COPY.
As rescanning these documents will not correct the image problems checked, please do not report these problems to the IFW Image Problem Mailbox.

OIPE
MAR 0 2 2004
PATENT & TRADEMARK OFFICE

PTO/SB/21 (02-04)
Approved for use through 07/31/2006. OMB 0651-0031
U.S. Patent and Trademark Office; U.S. DEPARTMENT OF COMMERCE
Under the Paperwork Reduction Act of 1995, no persons are required to respond to a collection of information unless it displays a valid OMB control number.

TRANSMITTAL FORM

(to be used for all correspondence after initial filing)

Application Number	10/600,975
Filing Date	June 20, 2003
First Named Inventor	Michael E. Shanahan
Art Unit	2681
Examiner Name	Not Yet Assigned
Total Number of Pages in This Submission: 4	Attorney Docket Number: MES/002CON

ENCLOSURES *(Check all that apply)*

- [x] Fee Transmittal Form
  - [ ] Fee Attached
- [ ] Amendment/Reply
  - [ ] After Final
  - [ ] Affidavits/declaration(s)
- [ ] Extension of Time Request
- [ ] Express Abandonment Request
- [x] Information Disclosure Statement
- [ ] Certified Copy of Priority Document(s)
- [ ] Response to Missing Parts/ Incomplete Application
  - [ ] Response to Missing Parts under 37 CFR 1.52 or 1.53
- [ ] Drawing(s)
- [ ] Licensing-related Papers
- [ ] Petition
- [ ] Petition to Convert to a Provisional Application
- [ ] Power of Attorney, Revocation Change of Correspondence Address
- [ ] Terminal Disclaimer
- [ ] Request for Refund
- [ ] CD, Number of CD(s) _____
- [ ] After Allowance communication to Technology Center (TC)
- [ ] Appeal Communication to Board of Appeals and Interferences
- [ ] Appeal Communication to TC **(Appeal Notice, Brief, Reply Brief)**
- [ ] Proprietary Information
- [ ] Status Letter
- [ ] Other Enclosure(s) (please Identify below):

Remarks

Submitted in accordance with 37 C.F.R. Section 1.97(8)(3).

SIGNATURE OF APPLICANT, ATTORNEY, OR AGENT

Firm or Individual name	Law Offices of Scott H. Kaliko, L.L.C. Scott H. Kaliko, Esq. Reg No. 45,786
Signature	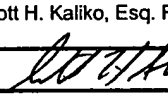
Date	2/26/04

CERTIFICATE OF TRANSMISSION/MAILING

I hereby certify that this correspondence is being facsimile transmitted to the USPTO or deposited with the United States Postal Service with sufficient postage as first class mail in an envelope addressed to: Commissioner for Patents, P.O. Box 1450, Alexandria, VA 22313-1450 on the date shown below.

Typed or printed name	Scott H. Kaliko		
Signature	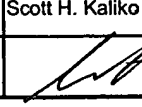	Date	2/27/04

This collection of information is required by 37 CFR 1.5. The information is required to obtain or retain a benefit by the public which is to file (and by the USPTO to process) an application. Confidentiality is governed by 35 U.S.C. 122 and 37 CFR 1.14. This collection is estimated to 2 hours to complete, including gathering, preparing, and submitting the completed application form to the USPTO. Time will vary depending upon the individual case. Any comments on the amount of time you require to complete this form and/or suggestions for reducing this burden, should be sent to the Chief Information Officer, U.S. Patent and Trademark Office, U.S. Department of Commerce, P.O. Box 1450, Alexandria, VA 22313-1450. DO NOT SEND FEES OR COMPLETED FORMS TO THIS ADDRESS. **SEND TO: Commissioner for Patents, P.O. Box 1450, Alexandria, VA 22313-1450.**

If you need assistance in completing the form, call 1-800-PTO-9199 and select option 2.

OIPE
MAR 0 2 2004
PATENT & TRADEMARK OFFICE

PTO/SB/08A (08-03)
Approved for use through 07/31/2006. OMB 0651-0031
U.S. Patent and Trademark Office; U.S. DEPARTMENT OF COMMERCE
Under the Paperwork Reduction Act of 1995, no persons are required to respond to a collection of information unless it contains a valid OMB control number.

Substitute for form 1449/PTO

INFORMATION DISCLOSURE STATEMENT BY APPLICANT

(Use as many sheets as necessary)

Sheet 1 of 3

Complete if Known	
Application Number	10/600,975
Filing Date	JUNE 20, 2003
First Named Inventor	Michael E. Shanahan
Art Unit	2681
Examiner Name	
Attorney Docket Number	MES/002CON

U. S. PATENT DOCUMENTS

Examiner Initials*	Cite No.[1]	Document Number Number-Kind Code[2] (if known)	Publication Date MM-DD-YYYY	Name of Patentee or Applicant of Cited Document	Pages, Columns, Lines, Where Relevant Passages or Relevant Figures Appear
		US- 5,220,420	06-15-1993	Hoarty, et al.	
		US- 5,247,347	09-21-1993	Litter, et al.	
		US- 5,253,275	10-12-1993	Yurt, et al.	
		US- 5,262,275	11-16-1993	Mincer, et al.	
		US- 5,341,474	08-23-1994	Gelman, et al	
		US- 5,428,606	06-27-1995	Moskowitz	
		US- 5,440,336	08-08-1995	Buhro, et al.	
		US- 5,442,749	08-15-1995	Northcutt, et al.	
		US- 5,508,733	04-16-1996	Kassatly	
		US- 5,524,141	06-04-1996	Braun, et al.	
		US- 5,528,281	06-18-1996	Grady, et al.	
		US- 5,541,917	06-30-1996	Farris	
		US- 5,550,557	08-27-1996	Verbiest, et al.	
		US- 5,550,578	08-27-1996	Hoarty, et al.	
		US- 5,550,863	08-27-1996	Yurt, et al.	
		US- 5,553,311	09-03-1996	McLaughlin, et al.	
		US- 5,557,675	09-17-1996	Schupak	
		US- 5,561,688	10-01-1996	Jones, Jr.	
		US- 5,563,649	10-08-1996	Gould, et al.	

FOREIGN PATENT DOCUMENTS

Examiner Initials*	Cite No.[1]	Foreign Patent Document Country Code[3]-Number[4]-Kind Code[5] (if known)	Publication Date MM-DD-YYYY	Name of Patentee or Applicant of Cited Document	Pages, Columns, Lines, Where Relevant Passages Or Relevant Figures Appear	T[6]

Examiner Signature		Date Considered	

*EXAMINER: Initial if reference considered, whether or not citation is in conformance with MPEP 609. Draw line through citation if not in conformance and not considered. Include copy of this form with next communication to applicant. [1] Applicant's unique citation designation number (optional). [2] See Kinds Codes of USPTO Patent Documents at www.uspto.gov or MPEP 901.04. [3] Enter Office that issued the document, by the two-letter code (WIPO Standard ST.3). [4] For Japanese patent documents, the indication of the year of the reign of the Emperor must precede the serial number of the patent document. [5] Kind of document by the appropriate symbols as indicated on the document under WIPO Standard ST.16 if possible. [6] Applicant is to place a check mark here if English language Translation is attached.

This collection of information is required by 37 CFR 1.97 and 1.98. The information is required to obtain or retain a benefit by the public which is to file (and by the USPTO to process) an application. Confidentiality is governed by 35 U.S.C. 122 and 37 CFR 1.14. This collection is estimated to take 2 hours to complete, including gathering, preparing, and submitting the completed application form to the USPTO. Time will vary depending upon the individual case. Any comments on the amount of time you require to complete this form and/or suggestions for reducing this burden, should be sent to the Chief Information Officer, U.S. Patent and Trademark Office, P.O. Box 1450, Alexandria, VA 22313-1450. DO NOT SEND FEES OR COMPLETED FORMS TO THIS ADDRESS. **SEND TO: Commissioner for Patents, P.O. Box 1450, Alexandria, VA 22313-1450.**

If you need assistance in completing the form, call 1-800-PTO-9199 (1-800-786-9199) and select option 2.

OIPE JC10 MAR 02 2004 PATENT & TRADEMARK OFFICE

PTO/SB/08A (08-03)
Approved for use through 07/31/2006. OMB 0651-0031
U.S. Patent and Trademark Office; U.S. DEPARTMENT OF COMMERCE
Under the Paperwork Reduction Act of 1995, no persons are required to respond to a collection of information unless it contains a valid OMB control number.

Substitute for form 1449/PTO

INFORMATION DISCLOSURE STATEMENT BY APPLICANT

(Use as many sheets as necessary)

Sheet 2 of 3

Complete if Known	
Application Number	10/600,975
Filing Date	JUNE 20, 2003
First Named Inventor	MICHAEL E. SHANAHAN
Art Unit	2681
Examiner Name	
Attorney Docket Number	MES/002CON

U. S. PATENT DOCUMENTS

Examiner Initials*	Cite No.[1]	Document Number Number-Kind Code[2] (if known)	Publication Date MM-DD-YYYY	Name of Patentee or Applicant of Cited Document	Pages, Columns, Lines, Where Relevant Passages or Relevant Figures Appear
		US- 5,566,353	10-15-1996	Cho, et al.	
		US- 5,568,181	10-22-1996	Greenwood, et al.	
		US- 5,570,126	10-29-1996	Blahut, et al.	
		US- 5,613,190	03-18-1997	Hylton, et al.	
		US- 5,613,191	03-18-1997	Hylton, et al.	
		US- 5,619,247	04-08-1997	Russo	
		US- 5,625,404	04-29-1997	Grady, et al.	
		US- 5,625,405	04-29-1997	DuLac, et al.	
		US- 5,644,354	07-01-1997	Thompson, et al.	
		US- 5,675,738	10-07-1997	Suzuki, et al.	
		US- 5,677,905	10-14-1997	Bigham, et al.	
		US- 5,680,325	10-21-1997	Rohner	
		US- 5,790,423	08-04-1998	Lau, et al.	
		US- 5,793,413	08-11-1998	Hylton, et al.	
		US- 5,793,980	08-11-1998	Glaser, et al.	
		US- 5,880,770	03-09-1999	Ilcisin, et al.	
		US- 5,926,624	07-20-1999	Katz, et al.	
		US- 5,943,046	08-24-1999	Cave, et al.	
		US- 5,983,069	11-09-1999	Cho, et al.	

FOREIGN PATENT DOCUMENTS

Examiner Initials*	Cite No.[1]	Foreign Patent Document Country Code[3]-Number[4]-Kind Code[5] (if known)	Publication Date MM-DD-YYYY	Name of Patentee or Applicant of Cited Document	Pages, Columns, Lines, Where Relevant Passages Or Relevant Figures Appear	T[6]

Examiner Signature		Date Considered	

*EXAMINER: Initial if reference considered, whether or not citation is in conformance with MPEP 609. Draw line through citation if not in conformance and not considered. Include copy of this form with next communication to applicant. [1] Applicant's unique citation designation number (optional). [2] See Kinds Codes of USPTO Patent Documents at www.uspto.gov or MPEP 901.04. [3] Enter Office that issued the document, by the two-letter code (WIPO Standard ST.3). [4] For Japanese patent documents, the indication of the year of the reign of the Emperor must precede the serial number of the patent document. [5] Kind of document by the appropriate symbols as indicated on the document under WIPO Standard ST.16 if possible. [6] Applicant is to place a check mark here if English language Translation is attached.

This collection of information is required by 37 CFR 1.97 and 1.98. The information is required to obtain or retain a benefit by the public which is to file (and by the USPTO to process) an application. Confidentiality is governed by 35 U.S.C. 122 and 37 CFR 1.14. This collection is estimated to take 2 hours to complete, including gathering, preparing, and submitting the completed application form to the USPTO. Time will vary depending upon the individual case. Any comments on the amount of time you require to complete this form and/or suggestions for reducing this burden, should be sent to the Chief Information Officer, U.S. Patent and Trademark Office, P.O. Box 1450, Alexandria, VA 22313-1450. DO NOT SEND FEES OR COMPLETED FORMS TO THIS ADDRESS. **SEND TO: Commissioner for Patents, P.O. Box 1450, Alexandria, VA 22313-1450.**

If you need assistance in completing the form, call 1-800-PTO-9199 (1-800-786-9199) and select option 2.

OIPE JC10 MAR 02 2004 PATENT & TRADEMARK OFFICE

PTO/SB/08A (08-03)
Approved for use through 07/31/2006. OMB 0651-0031
U.S. Patent and Trademark Office; U.S. DEPARTMENT OF COMMERCE
Under the Paperwork Reduction Act of 1995, no persons are required to respond to a collection of information unless it contains a valid OMB control number.

Substitute for form 1449/PTO

INFORMATION DISCLOSURE STATEMENT BY APPLICANT

(Use as many sheets as necessary)

Sheet 3 of 3

Complete if Known	
Application Number	10/600,975
Filing Date	JUNE 20, 2003
First Named Inventor	MICHAEL E. SHANAHAN
Art Unit	2681
Examiner Name	
Attorney Docket Number	MES/002CON

U. S. PATENT DOCUMENTS

Examiner Initials*	Cite No.[1]	Document Number Number-Kind Code[2] (if known)	Publication Date MM-DD-YYYY	Name of Patentee or Applicant of Cited Document	Pages, Columns, Lines, Where Relevant Passages or Relevant Figures Appear
		US- 5,986,690	11-161999	Hendricks	
		US- 6,002,720	12-14-1999	Yurt, et al.	
		US-			
		US-			
		US-			
		US-			
		US-			
		US-			
		US-			
		US-			
		US-			
		US-			
		US-			
		US-			
		US-			
		US-			
		US-			
		US-			
		US-			

FOREIGN PATENT DOCUMENTS

Examiner Initials*	Cite No.[1]	Foreign Patent Document Country Code[3]-Number[4]-Kind Code[5] (if known)	Publication Date MM-DD-YYYY	Name of Patentee or Applicant of Cited Document	Pages, Columns, Lines, Where Relevant Passages Or Relevant Figures Appear	T[6]

Examiner Signature		Date Considered	

*EXAMINER: Initial if reference considered, whether or not citation is in conformance with MPEP 609. Draw line through citation if not in conformance and not considered. Include copy of this form with next communication to applicant. [1] Applicant's unique citation designation number (optional). [2] See Kinds Codes of USPTO Patent Documents at www.uspto.gov or MPEP 901.04. [3] Enter Office that issued the document, by the two-letter code (WIPO Standard ST.3). [4] For Japanese patent documents, the indication of the year of the reign of the Emperor must precede the serial number of the patent document. [5] Kind of document by the appropriate symbols as indicated on the document under WIPO Standard ST.16 if possible. [6] Applicant is to place a check mark here if English language Translation is attached.

This collection of information is required by 37 CFR 1.97 and 1.98. The information is required to obtain or retain a benefit by the public which is to file (and by the USPTO to process) an application. Confidentiality is governed by 35 U.S.C. 122 and 37 CFR 1.14. This collection is estimated to take 2 hours to complete, including gathering, preparing, and submitting the completed application form to the USPTO. Time will vary depending upon the individual case. Any comments on the amount of time you require to complete this form and/or suggestions for reducing this burden, should be sent to the Chief Information Officer, U.S. Patent and Trademark Office, P.O. Box 1450, Alexandria, VA 22313-1450. DO NOT SEND FEES OR COMPLETED FORMS TO THIS ADDRESS. **SEND TO: Commissioner for Patents, P.O. Box 1450, Alexandria, VA 22313-1450.**

If you need assistance in completing the form, call 1-800-PTO-9199 (1-800-786-9199) and select option 2.

OIPE JC
OCT 14 2003
PATENT & TRADEMARK OFFICE

IN THE UNITED STATES PATENT AND TRADEMARK OFFICE

Applicant	:	Michael E. Shanahan
Serial No.	:	10/600,975 Confirmation No.: 7158
Filed:	:	June 20, 2003
For	:	METHODS AND APPARATUSES FOR PROGRAMMING USER-DEFINED INFORMATION INTO ELECTRONIC DEVIVES
Group Art Unit	:	2681
Examiner	:	Not Yet Assigned

October 14, 2003

Hon. Commissioner
for Patents
P.O. box 1450,
Alexandria VA 22313-1450

RECEIVED
OCT 2 3 2003
Technology Center 2600

PRELIMINARY AMENDMENT I

Sir:

Before publishing and examining this patent application, please amend the application as follows:

In the Claims

Claim 1 (canceled).

2. (New) A method of customizing a wireless telephone by programming a video file into the wireless telephone for use as an indicia of an incoming communication the method comprising:

connecting to a remote database that includes a plurality of lists of video files;

10/20/2003 WABDELR1 00000107 10600975
01 FC:2201 301.00 OP
02 FC:2202 558.00 OP

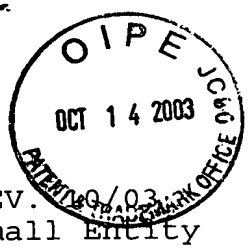

REV. 10/03
Small Entity

Docket No. MES/002 CON

IN THE UNITED STATES PATENT AND TRADEMARK OFFICE

PATENT APPLICATION

Applicant	:	Michael E. Shanahan
Application No.	:	10/600,975 Confirmation No.: 7158
Filed	:	June 20, 2003
For	:	METHODS AND APPARATUSES FOR PROGRAMMING USER-DEFINED INFORMATION INTO ELECTRONIC DEVICES
Group Art Unit	:	2681
Examiner	:	Not Yet Assigned

RECEIVED
OCT 23 2003
Technology Center 2600

Hon. Commissioner
for Patents
P.O. Box 1450
Alexandria VA 22313-1450

TRANSMITTAL LETTER

Sir:

Transmitted herewith: [X] a Preliminary Amendment; [ ] a Declaration; [ ] a Supplemental Information Disclosure Statement; [ ] substitute specification; [ ] an Associate Power of Attorney; [ ] formal drawings; to be filed in the above-identified patent application.

FEE FOR ADDITIONAL CLAIMS

[ ] A fee for additional claims is not required.

[X] A fee for additional claims is required.

EV132192534US

The additional fee has been calculated as shown below:

	CLAIMS REMAINING AFTER AMENDMENT		HIGHEST NUMBER PREVIOUSLY PAID FOR		PRESENT EXTRA		RATE		EXTRA FEES
TOTAL CLAIMS	82	-	20	* =	62	X	$9	=	$ 558.00
INDEPENDENT CLAIMS	10	-	3	** =	7	X	$43	=	$ 301.00
FIRST PRESENTATION OF A MULTIPLE DEPENDENT CLAIM						+	$145	=	$ 0.00

* If less than 20, insert 20.
** If less than 3, insert 3.

TOTAL $ 859.00

[X] A check in the amount of $ 859.00 is transmitted herewith.

EXTENSION FEE

[ ] The following extension is applicable to the Response filed herewith; [ ] $55.00 extension fee for response within first month pursuant to 37 C.F.R. § 1.17(a)(1); [ ] $210.00 extension fee for response within second month pursuant to 37 C.F.R. § 1.17(a)(2); [ ] $475.00 extension fee for response within third month pursuant to 37 C.F.R. § 1.17(a)(3); [ ] $740.00 extension fee for response within fourth month pursuant to 37 C.F.R. § 1.17(a)(4).

[ ] A check in the amount of [ ] $55.00; [ ] $210.00; [ ] $475.00; [ ] $740.00; in payment of the extension fee is transmitted herewith. A duplicate copy of this transmittal letter is transmitted herewith.

SUPPLEMENTAL IDS FEE

[ ] A check in the amount of $ 0.00 is transmitted herewith in payment of the Supplemental IDS fee pursuant to 37 C.F.R. § 1.17 (p).

Michael E. Shanahan
Applicant
Customer No. 32850
P.O. Box 381
Nyack, N.Y., 10960

RECEIVED
OCT 23 2003
Technology Center 2600

OIPE
OCT 14 2003
PATENT & TRADEMARK OFFICE

2681 $

Attorney Docket No. MES/002 CON

IN THE UNITED STATES PATENT AND TRADEMARK OFFICE

PATENT APPLICATION

Applicant	:	Michael E. Shanahan
Application No.	:	10/600,975 Confirmation No. 7158
Filing Date	:	June 20, 2003
For	:	METHODS AND APPARATUSES FOR PROGRAMMING USER-DEFINED INFORMATION INTO ELECTRONIC DEVICES
Group Art Unit	:	2681
Examiner	:	Not Yet Assigned

RECEIVED
OCT 23 2003
Technology Center 2600

"EXPRESS MAIL" mailing label number EV132192534US.

Date of Deposit: October 14, 2003

I hereby certify that this papers and listed hereon are being deposited with the United States Postal Service "EXPRESS MAIL POST OFFICE TO ADDRESSEE" service under 37 C.F.R. 1.10 on the date indicated above and is addressed to the Hon. Commissioner for Patents, P.O. Box 1450, Alexandria, VA 22313-1450.

Claire Saintil-Van Goodman

Enc.
- Preliminary Amendment 1
- Check for $ 859.00

allowing a user of the wireless telephone to browse at least one of the lists of video files;

allowing the user of the wireless telephone to select at least one of the video files from the browsed list;

optionally reviewing the selected video file before downloading the selected video into the wireless telephone; and

allowing the user to optionally download the selected video file for use as an indicia of an incoming communication.

3. (New) The method of claim 2 wherein the format of the selected video file is from the group comprising: JPEG, MPEG, GIF, AVI, or DVD.

4. (New) The method of claim 2 further comprising allowing the user to search the remote database for a certain desired video file using title or description information to aid in locating the desired video file.

5. (New) The method of claim 4 wherein the searching further comprises searching the Internet or other remote databases for the desired video file.

6. (New) The method of claim 2 wherein the browsing of video files is accomplished at least in part using a Wireless Application Protocol (WAP) compliant system.

7. (New) The method of claim 2 further comprising providing a visual indication on a display screen of the wireless telephone to confirm the selected video file has been successfully downloaded.

8. (New) The method of claim 2 further comprising:

downloading a selected video file into the wireless telephone; and

associating the downloaded video file with a characteristic indicative of a caller such that the associated video file plays when the indicative characteristic is received by the wireless telephone.

9. (New) The method of claim 2 wherein the characteristic indicative of the caller is the caller's telephone number.

10. (New) A method of customizing a wireless telephone by programming a video file into the wireless telephone for use as an indicia of an incoming communication, the method comprising:

connecting to a remote database that includes a plurality of video files;

allowing the user of the wireless telephone to browse and select at least one of the video files;

allowing the user to optionally download the selected video file into a programmable memory for use as an indicia of an incoming communication.

11. (New) The method of claim 10 further comprising allowing the user to optionally review the selected video file before downloading the selected video file into the wireless telephone.

12. (New) The method of claim 10 wherein the format of the selected video file is from the group comprising: JPEG, MPEG, GIF, AVI, or DVD.

13. (New) The method of claim 10 further comprising allowing the user to search the remote database for a certain desired video file using title or description information to aid in locating the desired video file.

14. (New) The method of claim 13 wherein the searching further comprises searching the Internet or other remote databases for the desired video file.

15. (New) The method of claim 10 wherein the browsing of video files is accomplished at least in part using a Wireless Application Protocol (WAP) compliant system.

16. (New) The method of claim 10 further comprising providing a visual indication on a display screen of the wireless telephone to confirm the selected video file has been successfully downloaded.

17. (New) The method of claim 10 further comprising:

downloading a selected video file into the wireless telephone; and

associating the downloaded video file with a characteristic indicative of a caller such that the associated video file plays when the indicative characteristic is received by the wireless telephone.

18. (New) The method of claim 10 wherein the characteristic indicative of the caller is the caller's telephone number.

19. (New) A wireless telephone that may be customized by programming a video file into the wireless telephone for use as an indicia of an incoming communication, the telephone comprising:

a communications link capable of connecting to a remote database that includes a plurality of lists of video files;

a display screen that allows a user of the wireless telephone to browse at least one of the lists of video files and view selectable video files present in the browsed list;

a speaker, display screen, and processing circuitry configured to allow the user to optionally review a selected video file before downloading the selected video file into the wireless telephone; and

a programmable memory circuit for allowing the user to optionally store the selected video file for use as an indicia of an incoming communication.

20. (New) The wireless telephone of claim 19 wherein the programmable memory circuit is configured to store video files in a format selected from the group comprising: JPEG, MPEG, GIF, AVI, or DVD.

21. (New) The wireless telephone of claim 19 wherein the speaker, display screen and processing circuitry is configured to play video files in a format selected from the group comprising: JPEG, MPEG, GIF, AVI, or DVD.

22. (New) The wireless telephone of claim 19 wherein the wireless telephone is configured to allow the user to search the remote database for a certain desired video file using title or description information to aid in locating the desired video file.

23. (New) The wireless telephone of claim 22 wherein the wireless telephone is configured to search the Internet or other remote databases for the desired video file.

24. (New) The wireless telephone of claim 19 wherein the wireless telephone includes a Wireless Application Protocol (WAP) compliant Internet browser.

25. (New) The wireless telephone of claim 19 configured to provide a visual indication on the display screen of the wireless to confirm the selected video file has been successfully downloaded.

26. (New) The wireless telephone of claim 19 configured to allow the user to associate a downloaded video file with a characteristic indicative of a caller such that the associated video file plays when the indicative characteristic is received by the wireless telephone.

27. (New) The method of claim 19 wherein the characteristic indicative of the caller is the caller's telephone number.

28. (New) A wireless telephone that may be customized by programming a video file into the wireless telephone for use as an indicia of an incoming communication, the telephone comprising:

a communications link capable of connecting to a remote database that includes a plurality of lists of video files;

a display screen that allows a user of the wireless telephone to browse at least one of the plurality of lists of video files and view selectable video files present in the browsed list;

processing circuitry configured to receive a selected video file from the communications link; and

a programmable memory circuit for allowing the user to optionally store the selected video file for use as an indicia of an incoming communication.

29. (New) The wireless telephone of claim 28 wherein the display screen operates in conjunction with the processing circuitry to allow the user to optionally review a selected video file before downloading the selected video file into the wireless telephone.

30. (New) The wireless telephone of claim 28 wherein the programmable memory circuit is configured to store video files in a format selected from the group comprising: JPEG, MPEG, GIF, AVI, or DVD.

31. (New) The wireless telephone of claim 28 wherein the display screen and processing circuitry is configured to play video files in a format selected from the group comprising: JPEG, MPEG, GIF, AVI, or DVD.

32. (New) The wireless telephone of claim 28 wherein the wireless telephone is configured to allow the user to search the remote database for a certain desired video file using title or description information to aid in locating the desired video file.

33. (New) The wireless telephone of claim 32 wherein the wireless telephone is configured to search the Internet or other remote databases for the desired video file.

34. (New) The wireless telephone of claim 28 wherein the wireless telephone includes a Wireless Application Protocol (WAP) compliant Internet browser.

35. (New) The wireless telephone of claim 28 configured to provide a visual indication on the display screen to confirm the selected video file has been successfully downloaded.

36. (New) The wireless telephone of claim 28 configured to allow the user to associate a downloaded video file with a characteristic indicative of a caller such that the associated video file plays when the indicative characteristic is received by the wireless telephone.

37. (New) A wireless telephone that may be customized by programming a video file into the wireless

telephone for use as an indicia of an incoming communication, the telephone comprising:

means for connecting to a remote database that includes a plurality of lists of video files;

means for browsing at least one of the lists of video files;

means for selecting at least one of the video files from the browsed list;

means for optionally reviewing the selected video file before downloading the selected video into the wireless telephone; and

means for downloading the selected video file for use as an indicia of an incoming communication.

38. (New) The wireless telephone of claim 37 further comprising means for searching the remote database for a certain desired video file using title or description information to aid in locating the desired video file.

39. (New) The wireless telephone of claim 38 wherein the searching further comprises means for searching the Internet or other remote databases for the desired video file.

40. (New) The wireless telephone of claim 37 further comprising means for providing a visual indication on a display screen of the wireless telephone to confirm the selected video file has been successfully downloaded.

41. (New) The wireless telephone of claim 37 further comprising means for associating a downloaded video file with a characteristic indicative of a caller such that the associated video file plays when the indicative characteristic is received by the wireless telephone.

42. (New) A wireless telephone that may be customized by programming an video file into the wireless telephone for use as an indicia of an incoming communication, the telephone comprising:

means for connecting to a remote database that includes a plurality of video files;

means for browsing and selecting at least one of the video files;

means for optionally downloading the selected video file into a programmable memory for use as an indicia of an incoming communication.

43. (New) The wireless telephone of claim 42 further comprising means for optionally reviewing the selected video file before downloading the selected video file into the wireless telephone.

44. (New) The wireless telephone of claim 43 further comprising means for searching the remote database for

a certain desired video file using title or description information to aid in locating the desired video file.

45. (New) The wireless telephone of claim 42 wherein the searching further comprises means for searching the Internet or other remote databases for the desired video file.

46. (New) The wireless telephone of claim 42 wherein the browsing of video files is accomplished at least in part using a Wireless Application Protocol (WAP) compliant system.

47. (New) The wireless telephone of claim 42 further comprising providing a visual indication on a display screen of the wireless telephone to confirm the selected video file has been successfully downloaded.

48. (New) The wireless telephone of claim 42 further comprising means for associating a downloaded video file with a characteristic indicative of a caller such that the associated video file plays when the indicative characteristic is received by the wireless telephone.

49. (New) The method of claim 2 further comprising preventing the unauthorized distribution of a downloaded video file.

50. (New) The method of claim 2 further comprising playing an audio portion the selected video file, if any, through an enhanced performance speaker capable of providing a substantially full range of sounds from the played video file.

51. (New) The method of claim 2 characterized by the use of a personal computer to perform the browsing step.

52. (New) The method of claim 2 further comprising providing the user with an opportunity to edit the selected video file.

53. (New) The method of claim 2 further comprising providing an indication that a memory capacity of the wireless telephone has been exceeded if the size of the video file to be downloaded is larger than available memory space in the wireless telephone.

54. (New) The method of claim 53 further comprising providing the user of the wireless telephone with the opportunity to cancel or modify a download request associated with an video file download operation if the size of the video file to be downloaded is larger than available memory space in the wireless telephone.

55. (New) The wireless telephone of claim 28 wherein the wireless telephone is configured to prevent the

unauthorized distribution of an video file stored in the programmable memory circuit.

56. (New) The wireless telephone of claim 29 further comprising an enhanced performance speaker capable of providing a substantially full range of audio sounds from an audio portion of the selected video file.

57. (New) The wireless telephone of claim 28 configured to provide an indication that a memory capacity of the wireless telephone has been exceeded if the size of the video file to be downloaded is larger than available memory space in the wireless telephone.

58. (New) The wireless telephone of claim 57 configured to provide the user of the wireless telephone with the opportunity to cancel or modify a download request associated with an video file download operation if the size of the video file to be downloaded is larger than the available memory space in the wireless telephone.

59. (New) A wireless telephone that may be customized by programming an video file into the wireless telephone for use as an indicia of an incoming communication, the telephone comprising:

means for connecting to a remote database that includes a plurality of video files;

means for selecting at least one of the video files from the database;

means for downloading and storing the selected video file for use as an indicia of an incoming communication; and

means for preventing the unauthorized distribution of a selected video file stored in the wireless telephone.

60. (New) The wireless telephone of claim 59 further comprising means for indicating that a memory capacity of the wireless telephone has been exceeded if the size of the video file to be downloaded is larger than available memory space in the wireless telephone.

61. (New) A wireless telephone that may be customized by searching for and selecting an video file from a remote computer and programming the selected video file into the wireless telephone for use as an indicia of an incoming communication, the telephone comprising:

a communications link capable of connecting to a database in the remote computer that comprises a plurality of lists of video files in JPEG, MPEG, GIF, AVI, or DVD format;

a display screen and a mobile Internet browser that allows a user of the wireless telephone to browse at least one of the plurality of lists of video files and view selectable video files present in the browsed list;

processing circuitry configured to receive a selected one of the video files from the communications link;

a programmable memory circuit for allowing the user to optionally store the selected video file for use as an indicia of an incoming communication; and

an enhanced performance speaker capable of providing a substantially full range of audio sounds from an audio portion of the JPEG, MPEG, GIF, AVI, or DVD files when one of the stored video files is played as an indicia of an incoming communication.

62. (New) The wireless telephone of claim 61 configured to provide an indication that a memory capacity of the wireless telephone has been exceeded if the size of the video file to be downloaded is larger than available memory space in the wireless telephone.

63. (New) The wireless telephone of claim 61 wherein the display screen operates in conjunction with the enhanced performance speaker and processing circuitry to allow the user to optionally review a selected video file before downloading the selected video file into the wireless telephone.

64. (New) The wireless telephone of claim 61 configured to allow the user to search the remote database for a certain desired video file using title or description information to aid in locating the desired video file.

65. (New) The wireless telephone of claim 61 configured to prevent the unauthorized distribution of an video file stored in the programmable memory circuit.

66. (New) A wireless telephone that may be customized by searching for and selecting an video file from a remote computer and programming the selected video file into the wireless telephone for use as an indicia of an incoming communication, the telephone comprising:

a communications link capable of connecting to a database in the remote computer that includes a plurality of video files;

a display screen and a browsing application program that allows a user of the wireless telephone to browse the video files and select at least one video file therefrom;

processing circuitry configured to supervise receipt of a selected video file from the communications link;

a programmable memory circuit for allowing the user to optionally store the selected video file for use as an indicia of an incoming communication; and

an enhanced performance speaker capable of providing a substantially full range of audio sounds that may be associated with the selected video file when the selected video file is played as an indicia of an incoming communication.

67. (New) The wireless telephone of claim 66 wherein the video file is selected from the group comprising JPEG, MPEG, GIF, AVI, or DVD files.

68. (New) The wireless telephone of claim 66 wherein the display screen operates in conjunction with the enhanced performance speaker and processing circuitry to allow the user to optionally review the selected video file before downloading the selected video file into the programmable memory circuit of the wireless telephone.

69. (New) The wireless telephone of claim 66 configured to prevent the unauthorized distribution of the selected video file stored in the programmable memory circuit.

70. (New) The wireless telephone of claim 63 configured to provide the user of the wireless telephone with the option of downloading the selected video file into a programmable memory in the wireless telephone after reviewing the selected video file.

71. (New) The wireless telephone of claim 70 configured to provide the user of the wireless telephone with the option of editing the selected video file before programming the selected video file into the programmable memory in the wireless telephone.

72. (New) The wireless telephone of claim 65 wherein the wireless telephone is configured to operate in conjunction with copyright protection software to prevent the unauthorized distribution of the selected video file stored in the programmable memory circuit.

73. (New) The wireless telephone of claim 68 configured to provide the user of the wireless telephone with the option of downloading the selected video file into a programmable memory in the wireless telephone after reviewing the selected video file.

74. (New) The wireless telephone of claim 73 configured to provide the user of the wireless telephone with the option of editing the selected video file before programming the selected video file into the programmable memory in the wireless telephone.

75. (New) The wireless telephone of claim 69 wherein the wireless telephone is configured to operate with copyright protection software to prevent the unauthorized distribution of the selected video file stored in the programmable memory circuit.

76. (New) A wireless telephone that may be customized by searching for and selecting an video file from a remote computer and programming the selected video file into

the wireless telephone for use at a time specified by a user, of the telephone, comprising:

a communications link capable of connecting to a database in the remote computer that includes a plurality of video files;

a display screen and a browsing application program that allows a user of the wireless telephone to browse the video files and select at least one video file therefrom;

processing circuitry configured to supervise receipt of a selected video file from the communications link;

a programmable memory circuit for allowing the user to optionally store the selected video file for use at a time specified by the user; and

an enhanced performance speaker capable of providing a substantially full range of audio sounds that may be associated with the selected video file when the selected video file is played.

77. (New) The wireless telephone of claim 76 wherein the video file is selected from the group comprising JPEG, MPEG, GIF, AVI, or DVD files.

78. (New) The wireless telephone of claim 76 wherein the display screen operates in conjunction with the enhanced performance speaker and processing circuitry to allow the user to optionally review the selected polyphonic video file before

downloading the selected video file into the programmable memory circuit of the wireless telephone.

79. (New) The wireless telephone of claim 76 configured to prevent the unauthorized distribution of the selected video file stored in the programmable memory circuit.

80. (New) The wireless telephone of claim 78 configured to provide the user of the wireless telephone with the option of downloading the selected video file into a programmable memory in the wireless telephone after reviewing the selected video file.

81. (New) The wireless telephone of claim 80 configured to provide the user of the wireless telephone with the option of downloading the selected video file into a programmable memory in the wireless telephone after reviewing the selected video file.

82. (New) The wireless telephone of claim 81 configured to provide the user of the wireless telephone with the option of editing the selected video file before programming the selected video file into the programmable memory in the wireless telephone.

REMARKS

These amendments more particularly point out and define the invention. An early and favorable action on this patent application is requested.

Respectfully submitted,

Michael E. Shanahan
Applicant
Customer No. 32850
P.O. Box 381
Nyack, N.Y. 10960

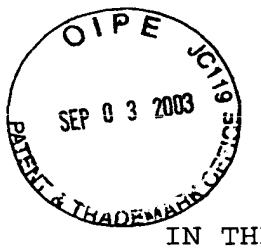

PATENTS
MES/002 CON

IN THE UNITED STATES PATENT AND TRADEMARK OFFICE

PATENT APPLICATION

Applicant	:	Michael E. Shanahan
Serial No.	:	10/600,975
Filed:	:	June 20, 2003
For	:	METHODS AND APPARATUSES FOR PROGRAMMING USER-DEFINED INFORMATION INTO ELECTRONIC DEVICES
Group Art Unit	:	not yet assigned

August 28, 2003

Hon. Commissioner
for Patents
P.O. Box 1450,
Alexandria VA 22313-1450

FIRST SUPPLEMENTAL INFORMATION DISCLOSURE STATEMENT

Sir:

In accordance with 37 C.F.R. §§ 1.56 and 1.97, applicants wish to call the attention of the Examiner to the documents cited in the Supplemental Information Disclosure Statement (IDS) filed herewith. Because these references are being cited in this case before the mailing date of the Office Action on the merits, pursuant to 37 C.F.R. § 1.97(b)(3), applicant believes no fee is due in connection with this Supplemental IDS.

U.S. Patents

Mitzlaff	4,866,766	September, 1989
Davis	4,868,561	September, 1989
Britz	5,414,444	May 9, 1995
Yamada	5,414,751	May, 1995
Kyronlahti et al.	5,452,354	September, 1995
McMahan et. al.	5,461,666	October 24, 1995
Shirai	5,572,571	November 6, 1996
Atcheson et al.	5,583,763	December, 1996
Hanson et al.	5,600,712	February, 1997
Newland	5,606,597	February 25, 1997
DeLuca et. al.	5,612,682	March 18, 1997
Eisdorfer et al.	5,724,411	March, 1998
Logan et al.	5,732,216	March, 1998
Krane	5,799,063	August, 1998
Ferriere	5,835,495	November, 1998
Kenagy et. al.	5,842,124	November 24, 1998
Wells et al.	5,870,683	February, 1999
Hsu	5,907,604	May, 1999
Wallace et al.	5,933,328	August, 1999
Kim	5,940,775	August 17, 1999
Schulhof et al.	5,948,059	September, 1999
Ohayon	5,952,918	September, 1999
Blanvillain et al.	5,953,408	September, 1999
Houtari	5,987,323	November, 1999
Morishima	6,075,998	June, 2000
Sumner	6,091,947	July, 2000
Kohler	6,140,568	October, 2000
McAllister et al.	6,101,242	August, 2000
Parluski et al.	6,122,526	September 19, 2000
Lee et al.	6,137,525	October 24, 2000
Foti	6,138,006	October, 2000
Burg	6,219,413	April, 2001
Sparks et al.	6,222,838	April, 2001
Ball et al.	6,226,532	May, 2001
Toshida	6,229,990	May, 2001
Spiecher	6,243,375	June, 2001
Yoshino	6,308,086	October, 2001
Schnarel et al.	6,389,124	May, 2002
Ryu	6,483,531	November, 2002
Shanahan	6,496,692	December, 2002

Foreign Patents

Vazvan	WO 00/36857	June 2000

Other Documents

PCT Search Report PCT/US00/32920, Mar. 20, 2002
SGS Thompson Microelectronics ST 5092 Data Sheet pp. 1-29

Because this is a continuation application, copies of all the documents cited above are not enclosed. Only copies of those documents not previously cited against the parent case are included. It is respectfully requested that these documents be: (1) fully considered by the Patent and Trademark Office during the examination of this application; and (2) printed on any patent which may issue on this application. Applicant requests that a copy of Form PTO-1449 (submitted in duplicate herewith), as considered and initialed by the Examiner, be returned with the next communication.

An early and favorable action is respectfully requested.

Respectfully submitted,

Michael E. Shanahan
Applicant
Customer No. 32850
P.O. Box 381
Nyack, N.Y., 10960

I hereby certify that this Correspondence is being deposited with the U.S. Postal Service as First Class Mail in an envelope Addressed to: Commissioner for Patents P.O. Box 1450 Alexandria, VA 22313-1450 on August 28, 2002

Claire J. Santil-van Goodman

Signature of Person Signing

FORM PTO-1449	U.S. DEPARTMENT OF COMMERCE PATENT AND TRADEMARK OFFICE	ATTY. DOCKET NO. MES/002 CON	SERIAL NO. 10/600,975
	INFORMATION DISCLOSURE STATEMENT BY APPLICANT	APPLICANT Michael E. Shanahan	
		FILING DATE June 20, 2003	GROUP

OIPE SEP 03 2003 PATENT & TRADEMARK OFFICE

U.S. PATENT DOCUMENTS

EXAMINER INITIAL	DOCUMENT NUMBER	DATE	NAME	CLASS	SUBCLASS	FILING DATE IF APPROPRIATE
	4,866,766	09/89	Mitzlaff	379	374	
	4,868,561	09/89	Davis	340	825.44	
	5,414,444	05/95	Britz	345	156	
	5,414,751	05/95	Yamada	379	58	
	5,452,354	09/95	Kyronlahti et al.	379	375	
	5,461,666	10/95	McMahan et al.	379	67	
	5,572,571	10/96	Shirai	379	58	
	5,583,763	12/96	Atcheson et al.	364	551.01	
	5,600,712	02/97	Hanson et al.	379	142.06	
	5,606,597	02/97	Newland	379	61	
	5,612,682	03/97	DeLuca et al.	340	825	
	5,724,411	03/98	Eisdorfer et al.	379	93.23	
	5,732,216	03/98	Logan et al.	395	200	
	5,799,063	08/98	Krane	379	88.04	
	5,835,495	11/98	Ferriere	370	465	
	5,842,124	11/98	Kenagy et al.	455	418	
	5,870,683	02/99	Wells et al.	455	566	
	5,907,604	05/99	Hsu	379	142.06	
	5,933,328	08/99	Wallace et al.	361	737	
	5,940,775	08/99	Kim	455	567	
	5,948,059	09/99	Schulhof et al.	395	200	
	5,952,918	09/99	Ohayon	340	539	
	5,953,408	09/99	Blanvillain et al.	379	374	
	5,987,323	11/99	Huotari	455	433	
	6,075,998	06/00	Morishima	455	567	
	6,091,947	07/00	Sumner	455	413	
	6,140,568	10/00	Kohler	84	616	
	6,101,242	08/00	McAllister et al.	379	201.02	
	6,122,526	09/00	Parluski et al.	455	556	

EXAMINER DATE CONSIDERED

EXAMINER: Initial if citation considered, whether or not citation is in conformance with MPEP 609; Draw line through citation if not conformance and not considered. Include copy of this form with next communication to applicant.

FORM PTO-1449	U.S. DEPARTMENT OF COMMERCE PATENT AND TRADEMARK OFFICE	ATTY. DOCKET NO. MES/002 CON	SERIAL NO. 10/600,975
	INFORMATION DISCLOSURE STATEMENT BY APPLICANT	APPLICANT Michael E. Shanahan	
		FILING DATE June 20, 2003	GROUP

OIPE JC17 SEP 03 2003 PATENT & TRADEMARK OFFICE

	6,137,525	10/00	Lee et al.	348	14.02	
	6,138,006	10/00	Foti	455	414	
	6,219,413	02/01	Burg	370	352	
	6,222,838	04/01	Sparks et al.	370	352	
	6,226,532	05/01	Ball et al.	704	270	
	6,229,990	05/01	Toshida	455	69	
	6,243,375	06/01	Spiecher	370	352	
	6,308,086	10/01	Yoshino	455	567	
	6,389,124	05/02	Schnarel et al.	379	142.01	
	6,483,531	11/02	Ryu	348	14.01	
	6,496,692	12/02	Shanahan	455	418	

OTHER DOCUMENTS (Including Author, Title, Date, Pertinent Pages, Etc.)

EXAMINER INITIAL	
	Vazvan WO 00/36857 June 2000
	PCT Search Report PCT/US00/32920, Mar. 20, 2002
	SGS Thompson Microelectronics ST 5092 Data Sheet pp. 1-29

EXAMINER DATE CONSIDERED

EXAMINER: Initial if citation considered, whether or not citation is in conformance with MPEP 609; Draw line through citation if not conformance and not considered. Include copy of this form with next communication to applicant.

PCT WORLD INTELLECTUAL PROPERTY ORGANIZATION
International Bureau

INTERNATIONAL APPLICATION PUBLISHED UNDER THE PATENT COOPERATION TREATY (PCT)

(51) International Patent Classification 7 : H04Q 7/22 | A2

(11) International Publication Number: WO 00/36857

(43) International Publication Date: 22 June 2000 (22.06.00)

(21) International Application Number: PCT/FI99/01042

(22) International Filing Date: 15 December 1999 (15.12.99)

(30) Priority Data:
982714 15 December 1998 (15.12.98) FI

(71) Applicant: OY RADIOLINJA AB [FI/FI]; P.O. Box 500, FIN-00181 Helsinki (FI).

(72) Inventor: VAZVAN, Behruz; Viulutie 7 B 25, FIN-00420 Helsinki (FI).

(74) Agent: SEPPO LAINE OY; Itämerenkatu 3 B, FIN-00180 Helsinki (FI).

(81) Designated States: EE, LT, LV, NO, European patent (AT, BE, CH, CY, DE, DK, ES, FI, FR, GB, GR, IE, IT, LU, MC, NL, PT, SE).

Published
In English translation (filed in Finnish).
Without international search report and to be republished upon receipt of that report.

(54) Title: METHOD FOR IMPLEMENTING A SOUND MESSAGE SEND/RECEIVE SERVICE IN A TELECOMMUNICATION NETWORK

(57) Abstract

The present invention concerns a method for sending a sound or musical tune message from a service user terminal device (1) or, alternatively, on the service user's request, to the terminal device (2) of another subscriber in short-message format. The method is adapted implementable by means of a mobile phone and/or a PC connected to a telecom network (3). According to the invention, the subscriber wishing to send a musical tune message selects the desired musical tune from the information displayed on his terminal device (1) and then selects the directory number or connection code of the recipient, whereupon said message is sent to the recipient's terminal device (2). In conjunction with the receipt of said musical tune message at the recipient(s) terminal (2), the sender's name and/or directory number, together with a possible text message, are displayed to the recipient. Hereupon, the recipient may activate said musical tune message and hear it and, if so desired, store the same in his terminal device (2) or, optionally, send the same to the terminal device of a third party.

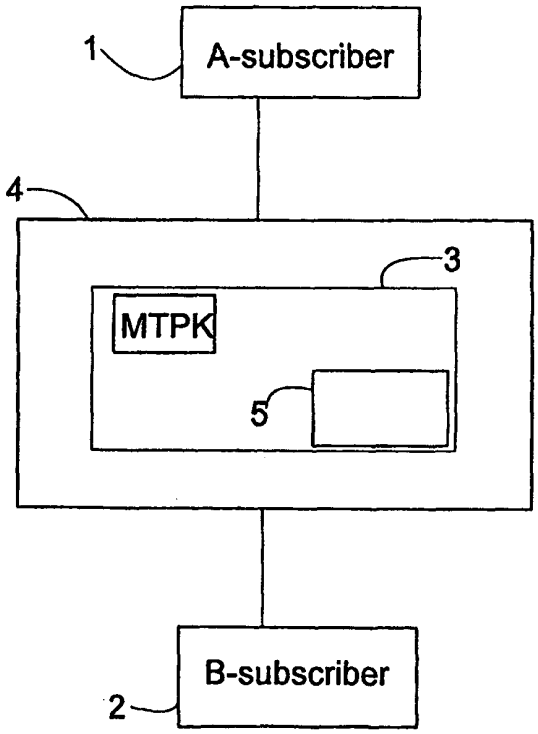

Method for implementing a sound message send/receive service in a telecommunication network

The invention relates to a method according to the preamble of claim 1.

The invention also relates to a mobile phone, a service center and a terminal device suitable for implementing the method according to the invention.

It is an object of the invention to provide a method for sending a sound message (a tune) from a subscriber terminal device 1 or, alternatively, on a request sent therefrom, in a short-message format to a terminal device 2 owned by another subscriber. It is a further object of the invention to provide a technique for storing said sound message in a subscriber terminal device as the alarm signal of the terminal device's alarm clock.

In the art are known a method and system in which the connection data associated with a service provider or a service, such as the name, connection code, etc., are selected and activated in the subscriber's terminal device and, subsequently, are sent to the system switching center or to the recipient's terminal device or account. Also a method and system are known featuring the possibility of delivering messages comprised of successive tones or a text (such as short messages) to a subscriber terminal device or, vice versa, from the terminal device. Such embodiments are described, e.g., in FI patent applications no. FI 945,075, FI 962,553 and FI 962,961. On the basis of cited method, also systems have been developed in which the system switching center (server) has ring tones (e.g., popular music samples) stored therein so that a mobile phone subscriber can retrieve said ring tones into his mobile phone through the steps of reading a code (e.g., BVAZSAEP), e.g., from the service provider's www pages, by entering the code into his own terminal device and then sending said code as a short message to the short-message server/center, where the subscriber is identified and, based on said code, the ring tone ordered by the subscriber is sent to his mobile telephone. Next, the subscriber can play the delivered

ring tone and store it in his mobile phone's selection of ring tones, whereupon it can be used only as a ring tone. The implementation of this embodiment is possible in, e.g., mobile phone types Nokia 6110, 6150, 8810, 8110i and 9000i, however, without the possibility of retransmitting the received ring tone to another subscriber or using the same as the alarm signal of the mobile phone's alarm clock. Such a service provider can be found by contacting, e.g., Radiolinja's Jukebox service at *http://jukeboksi.radiolinja.fi* or Sonera's Doris service at *http://www.sonera.fi/nmt-gsm/doris/aanivalitsin.html*.

The basic concept of these ring tone services is that a subscriber can order a desired ring tone from a service provider, whereby the ring tone data is sent only to his personal mobile phone, wherein it can be used as a ring tone for incoming calls.

For some time, the service centers of telecom operators have also offered voice mail systems in which a subscriber can leave a voice message to the voice mail center, whereupon the destination party known as B-subscriber has been provided with the possibility of hearing said message by calling the voice mail center. Systems based on this concept operate so that, after receiving a voice mail message, the voice mail center sends the destination subscriber a message informing that one voice mail message has been received at the voice mail center. Then, the destination subscriber calls the voice mail center, receives instructions and enters his password, whereupon he is authorized to listen to the voice-mail messages addressed to him.

A shortcoming of this arrangement is that no musical tune messages or melodic ring tones can be transmitted to another subscriber from the ordering pages of the service provider's www site or from the subscriber's personal terminal device. A further shortcoming is that the sending subscriber cannot *a priori* know whether the other subscriber has a terminal device suitable for receiving a melodic voice mail message.

It is an object of the invention to provide a feature service allowing a subscriber to send by means of his terminal device a musical tune message (MT) to another

subscriber's terminal, by means of which device the musical tune message can be listened to, stored and/or retransmitted to the terminal device of a third party.

A further shortcoming of conventional techniques is that the alarm clock signal of a terminal device has been controllable only by the owner of the terminal device, whereby alarm signal information defined by others than the terminal device owner has been impossible to emit via the alarm clock device or in the same fashion as by an alarm clock.

The goal of the invention is achieved by providing a telecom network with a facility to deliver ring tones and the like particularly as a musical tune message to the terminal device of another subscriber. The invention is particularly characterized in that the sending party (e.g., the A-subscriber) is offered the possibility of sending a musical tune message (MT) to the terminal device of the another party later called the B-subscriber. A preferred embodiment of the invention is also characterized in that the message received by a subscriber terminal device may also be used as the alarm signal of the terminal device's alarm clock.

Particularly advantageously, the musical tune message is played to the subscriber either from the alarm signal device at the loudness of the terminal device's alarm clock or from the earphone of a hands-free set at a sound pressure above the normal setting.

More specifically, the method according to the invention is characterized by the specifications disclosed in the characterizing part of claim 1.

The mobile phone according to the invention is characterized by what is stated in the characterizing part of claim 15.

The service center according to the invention is characterized by what is stated in the characterizing part of claim 16.

The terminal device according to the invention is characterized by what is stated in the characterizing part of claim 17.

The invention has significant benefits. Instead of a mere voice mail message or text message, the user of the invention can send another subscriber of a short-message service a musical tune message (MT), whereby an unexpected type of novel feature service is offered to mobile phone users and service providers.

In the following, the invention is described in more detail with reference to appended drawings in which

Fig. 1 is a block diagram illustrating the equipment and system associated with the service; and

Figs. 2A and 2B show a flow diagram illustrating the send/receive arrangements of a musical tune message in two alternative embodiments.

Referring to the block diagram of Fig. 1, the invention described herein relates to a method for sending a voice mail message or musical tune message (MT) with the help of a subscriber terminal device 1 to the terminal device 2 of another subscriber. The method is applicable in a telecom network 4, part of which is formed by a musical tune message center 3, wherefrom the user by means of his terminal device can select a desired musical piece 5, then submit the directory number of the recipient's terminal device 2 and thus send the musical piece to the recipient's terminal device 2, whose display subsequently indicates the greetings or other message received from the sender. Next, the recipient can after storage and/or activation of the received musical or voice-mail message listen to the same, store the same in his terminal device 2 and use the same as a ring tone, the alarm signal of the alarm clock of the terminal device or retransmit the same to a third party.

As shown in Fig. 1 and Fig. 2A, the process according to the invention begins from block 10, followed by block 11 in which the A-subscriber opens with the help of his terminal device 1 the www page of a musical tune message center MTPK 3 maintained by a service provider such as a telecom operator, where the stored musical pieces are selectable by certain codes/names and are so arranged that the A-subscriber 1 can enter in a certain field the mobile phone directory number (e.g., 050-5066728) of the recipient's (B-subscriber) terminal device 2. After the A-subscriber has entered the directory number of the B-subscriber 2 and selected his favourite musical piece, he can give the "send" command (by a certain keystroke or icon, etc.) that in block 12 sends the musical tune message to the B-subscriber's mobile phone 2 over the telecom network 4. The B-subscriber's terminal device 2 indicates the greeting/message associated with the musical tune message as a short message (e.g., as text *"With love from me"*) on the display of the terminal device 2. The B-subscriber can store and/or activate the musical tune message, as well as listen to or store the same in his terminal device as is known from the listening and storing technique of ring tones. Before the desired musical tune message (MT) is sent to the B-subscriber's terminal device 2, MTPK 3 checks in block 13 the compatibility of B-subscriber's terminal device 2. If the check result is "YES", MTPK 3 sends in block 15 the musical tune message (MT) to the B-subscriber's terminal device 2. If the result is "NO", MTPK 3 reports in block 14 the situation to the A-subscriber via his terminal device 1. Next, the B-subscriber's terminal device in block 16 indicates the message transmitted along with the received MT. At his will, the B-subscriber can activate the MT in block 17 and hear it.

Fig. 2B illustrates an alternative process in which the A-subscriber enters, after the start block 18, into his own mobile phone 1 the code of the desired musical piece stored in the musical tune message service center 3 and/or the name thereof (e.g., "BVAZSAEP" and/or "Holy night") and in block 19 the mobile phone directory number of the B-subscriber, and sends the information as a short message to the service provider's service center 3, where the message is checked in block 20 and, when necessary, checks in block 21 whether the B-subscriber has a compatible

terminal device and, subsequently, the ordered musical tune message is sent in block 23 to the B-subscriber's terminal device 2. If MTPK cannot retrieve sufficient data on the type of the B-subscriber's terminal device (e.g., because the B-subscriber may be a client of another network and therefore data on his terminal device is not available in the network, or some other reason prevents access to the needed data), MTPK sends a report on such a shortcoming to the A-subscriber and gives in block 22 the A-subscriber a choice whether or not to send the ordered musical tune message MT to the B-subscriber. Then, A-subscriber can decide whether to send the ordered MT to the B-subscriber although no firm information has been obtained on the existence of a compatible terminal device on the B-subscriber side. This choice can save the A-subscriber from unnecessary costs. Nevertheless, the A-subscriber can order the musical tune message MT to be sent to his own mobile phone 1 and then retransmit the message to the B-subscriber's terminal device 2 by dialing the B-subscriber's directory number. The user's terminal device (1, 2) contains all the necessary means for retransmitting the musical tune message to another subscriber or for storing the musical tune message into the alarm signal selection of the alarm clock of his terminal device.

MTPK may include a short-message center, an intelligent network or a portion of these facilities or, alternatively, comprise a www server or the like equipment.

Instead of a musical tune message, also a synthesized sound message may be used as the ordered message. Hence, the scope and spirit of the invention also covers synthesized sound sequences that cannot be categorized as music or speech in a strict sense.

A sound message is typically played from the alarm signal device of the terminal at a sound pressure approximately equal to that of the alarm signal proper.

Accordingly, at least the following alternatives are possible according to the invention:

The B-subscriber may be provided with a facility allowing the musical tune message, which is sent by the A-subscriber or, respectively, ordered by the A-subscriber to be sent, to be stored in his terminal device 2 or the smart card thereof (such as the SIM card) and use the content of the message as the ring tone of his terminal device 2, alarm signal of his terminal device alarm clock or retransmit the message to a third party.

Service billing can be arranged according to the invention so that the A-subscriber is billed by the service center 3 or a billing facility (such as a billing center) operating therewith for a musical tune message sent to the B-subscriber or, alternatively, a sufficient payment (e-cash) must be sent from the A-subscriber's terminal device in conjunction with the sending of the musical tune message to the account of the service center and/or the due party to receive the payment such as the service provider.

It is also possible to complement the billing of the musical tune message service by allowing the service center 3 or the billing center operating therewith to cater to the artists' royalty payments so that the latter will be paid in conjunction with the musical tune message transmission or thereafter to the artists' royalty payment account.

The invention also concerns a mobile phone 1, 2 to be used in conjunction with the use of the method according to the invention, said mobile phone including means for reception, storage and playing as well as retransmission of said sound message to the terminal device of a third party.

Furthermore, the invention concerns a service center comprising means for storage, reception and sending of musical tune messages, as well as means for receiving and/or storing the (B-subscriber) directory number of the recipient of the musical tune message, whereby said service center 3 also includes means for receiving the code/name of the musical tune message and the destination B-subscriber directory number submitted from the A-subscriber's terminal device 1 so that said service

center is capable of sending the musical tune message selected by the A-subscriber 1 to the terminal device 2 of the B-subscriber.

While the invention has been described above by making reference to one of its preferred embodiment, those skilled in the art will find a plurality of modifications possible within the inventive spirit and scope of the appended claims.

What is claimed is:

1. Method for sending a message to the terminal device (2) of a mobile phone subscriber in a telecom network (4), said network incorporating a service center (3) wherein the subscriber identity is verified if necessary, characterized in that the sending party (e.g., the A-subscriber) is provided with a facility to send another terminal device (2) (e.g., the B-subscriber) a sound message (such as a musical tune message, MT) that can be listened to at least essentially at the same loudness as the normal alarm signal emitted by said terminal device (2).

2. Method according to claim 1, characterized in that the message to be sent comprises a preselectable musical piece.

3. Method according to claim 1, characterized in that the message to be sent comprises a preselectable sampled or synthesized sound message.

4. Method according to any of claims 1-3, characterized in that the identity of the client (1) ordering the service and/or the recipient of the message or his terminal device (2) is verified if necessary from a service code and/or directory number and/or name/code.

5. Method according to claim 1, characterized in that the sending client is provided with a facility to select a desired sound message and enter the directory number of the B-subscriber on a www service page furnished by said service center (3) so that said www service page is displayed on the sending client's terminal device (1).

6. Method according to claim 1, characterized in that the client (1) is provided with a facility to send the code and/or name of said desired musical tune message, together with the B-subscriber directory number, to said musical tune message service center (3), wherein the data of the B-subscriber and the compatibili-

ty of the B-subscriber's terminal device are verified if necessary, after which the musical tune message ordered by said client is sent to the B-subscriber (2), the B-subscriber's terminal device (2) indicates the receipt of the musical tune message by displaying a text telling that said musical tune message has been received and, if so arranged, displays the sending party's text message (e.g., "With love"), and finally the B-subscriber can hear said musical tune message by activating/storing the same and, when so desired, retransmit the same to the terminal device of a third mobile phone user.

7. Method according to claim 1, c h a r a c t e r i z e d in that sending said musical tune message (MT) may be allowed from both the service client's terminal device (1) as well as from said service center (3) to the terminal device (2) of the B-subscriber in a short-message format.

8. Method according to any of foregoing claims, c h a r a c t e r i z e d in that the mobile phone (1 or 2) used in the method is allowed to receive, store, play and re-transmit a musical tune message sent thereto.

9. Method according to any of foregoing claims, c h a r a c t e r i z e d in that the recipient's terminal (2) is allowed to receive and play the musical tune message sent thereto immediately after the receipt thereof without any action from the user's side.

10. Method according to any of foregoing claims for sending and/or receiving musical tune messages via such a telecom network that incorporates a service center (3) or a data base (5) associated therewith, said data base containing therein in a stored format a plurality of music or sound messages or musical tune samples, together with their codes, names and the like data , c h a r a c t e r i z e d in that said service center and/or said data base (3) is arranged so that the names and codes of the musical tune messages are sent to the service user's terminal device (1) and are displayed thereon, together with a field serving for the entry of the recipient's directory number therein, whereby the service user can submit the recipient's directory number in the field and

select the desired musical tune message and send the same directly from the service center to the B-subscriber's terminal device (2).

11. Method according to any of foregoing claims, characterized in that the A-subscriber is provided with a facility of entering the code and/or name of a musical tune message, together with the B-subscriber's mobile phone directory number, to send said data to said service center (3), wherein the necessary operations are carried out to send said desired musical tune message to said B-subscriber.

12. Method according to any of foregoing claims, characterized in that the B-subscriber is provided with a facility allowing the musical tune message, which is sent by the A-subscriber (1) or, respectively, ordered by the A-subscriber to be sent, to be stored in his terminal device (2) or the smart card thereof (such the SIM card) and, subsequently, use the content of the message as the ring tone of his terminal device (2).

13. Method according to any of foregoing claims, characterized in that the A-subscriber is billed by the service center (3) or a billing facility (such as a billing center) operating therewith for a music sample message or a musical tune message sent to the B-subscriber or, alternatively, a sufficient payment (e-cash) is required to be sent from the A-subscriber's terminal device in conjunction with the sending of said music sample message or said musical tune message to the account of the service center (3) and/or the due party to receive the payment such as the service provider.

14. Method according to any of foregoing claims, characterized in that the billing of the musical tune message service performed in conjunction with the sending of said message at said service center (3) or said billing center operating therewith takes into account the artists' royalty payments so that the latter will be paid in conjunction with the musical tune message transmission or thereafter to the artists' royalty payment account.

15. Mobile phone (1, 2) suitable for use in the method according to any of foregoing claims, c h a r a c t e r i z e d in that said mobile phone (1, 2) includes means for reception, storage and playing as well as retransmission of said sound message to the terminal device (2) of another subscriber.

16. Service center (3) suitable for use in the method according to any of foregoing claims, c h a r a c t e r i z e d in that said service center comprises means for storage, reception and sending of musical tune messages, as well as means for receiving and/or storing the (B-subscriber) directory number of the recipient of the musical tune message, whereby said service center (3) also includes means for receiving the code/name of the musical tune message and the destination B-subscriber directory number submitted from the A-subscriber's terminal device (1) so that said service center is capable of sending the musical tune message selected by the A-subscriber (1) to the terminal device (2) of the B-subscriber.

17. Terminal device suitable for use in the method according to any of foregoing claims, c h a r a c t e r i z e d in that said terminal device (1 or 2) includes means facilitating the service user to store the received musical tune message into a format serving as the alarm signal of terminal device's alarm clock and to select and/or change said tune to serve as the alarm signal of the alarm clock.

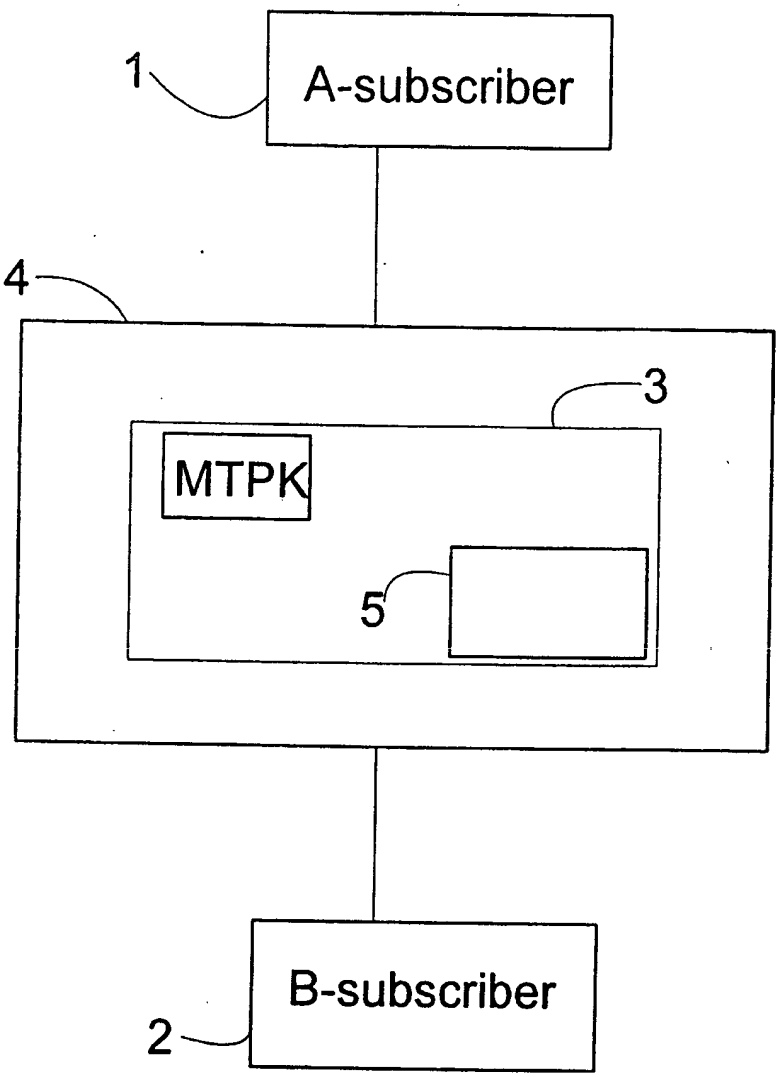

Fig. 1

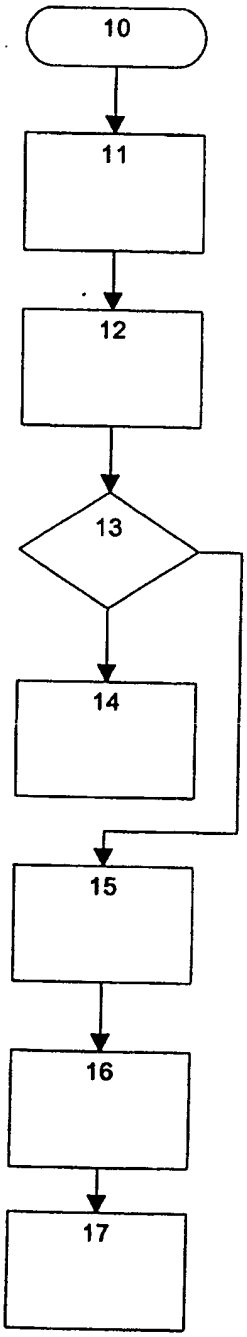

Fig. 2A

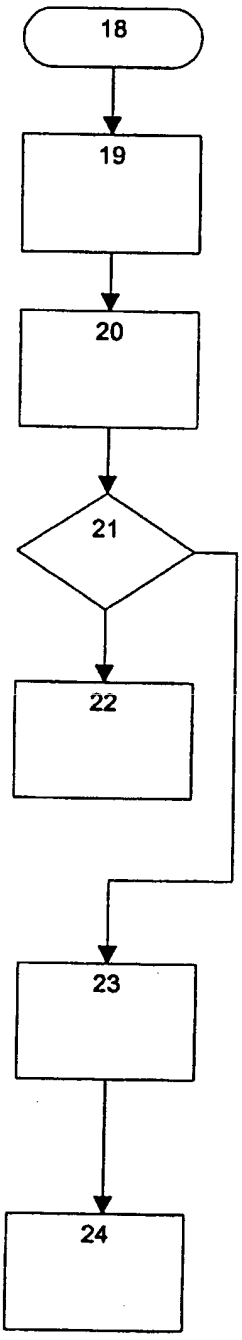

Fig. 2B

SGS-THOMSON MICROELECTRONICS

ST5092

2.7V SUPPLY 14-BIT LINEAR CODEC WITH HIGH-PERFORMANCE AUDIO FRONT-END

PRELIMINARY DATA

FEATURES:

Complete CODEC and FILTER system including:

- 14 BIT LINEAR ANALOG TO DIGITAL AND DIGITAL TO ANALOG CONVERTERS.
- 8 BIT COMPANDED ANALOG TO DIGITAL AND DIGITAL TO ANALOG CONVERTERS A-LAW OR μ-LAW.
- TRANSMIT AND RECEIVE BAND-PASS FILTERS
- ACTIVE ANTIALIAS NOISE FILTER.

Phone Features:

- THREE SWITCHABLE MICROPHONE AMPLIFIER INPUTS. GAIN PROGRAMMABLE: 20 dB PREAMP. (+MUTE), 0 . . 22.5 dB AMPLIFIER, 1.5 dB STEPS.
- EARPIECE AUDIO OUTPUT. ATTENUATION PROGRAMMABLE: 0 . . 30 dB, 2 dB STEPS.
- EXTERNAL AUDIO OUTPUT. ATTENUATION PROGRAMMABLE: 0 . . 30 dB, 2 dB STEPS.
- TRANSIENT SUPRESSION SIGNAL DURING POWER ON AND DURING AMPLIFIER SWITCHING.
- INTERNAL PROGRAMMABLE SIDETONE CIRCUIT. ATTENUATION PROGRAMMABLE: 16 dB RANGE, 1 dB STEP. ROUTING POSSIBLE TO BOTH OUTPUTS.
- INTERNAL RING OR TONE GENERATOR INCLUDING DTMF TONES, SINEWAVE OR SQUAREWAVE WAVEFORMS. ATTENUATION PROGRAMMABLE: 27dB RANGE, 3dB STEP. THREE FREQUENCY RANGES:
  a) 3.9Hz . . . . 996Hz, 3.9Hz STEP
  b) 7.8Hz . . . . 1992Hz, 7.8Hz STEP
  c) 15.6Hz . . . . 3984Hz, 15.6Hz STEP
- PROGRAMMABLE PULSE WIDTH MODULATED BUZZER DRIVER OUTPUT.

General Features:

- SINGLE 2.7V to 3.6V SUPPLY
- EXTENDED TEMPERATURE RANGE OPERATION (*) -40°C to 85°C.
- 1.5 μW STANDBY POWER (TYP. AT 3.0V).
- 15mW OPERATING POWER (TYP. AT 3.0V).
- 13mW OPERATING POWER (TYP. AT 2.7V).
- CMOS COMPATIBLE DIGITAL INTERFACES.
- PROGRAMMABLE PCM AND CONTROL INTERFACE MICROWIRE COMPATIBLE.

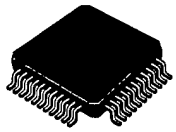

TQFP44(10x10x1.4)

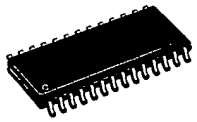

SO28

ORDERING NUMBERS:

	Package	Dim.	Cond.
ST5092AD	SO28		Tube
ST5092ADTR	SO28		Tape&Reel
ST5092TQFP	TQFP44	10x10x1.4	Tray 8x20
ST5092TQFPTR	TQFP44	10x10x1.4	Tape&Reel

APPLICATIONS:

- GSM DIGITAL CELLULAR TELEPHONES.
- CT2 DIGITAL CORDLESS TELEPHONES.
- DECT DIGITAL CORDLESS TELEPHONES.
- BATTERY OPERATED AUDIO FRONT-ENDS FOR DSPs.

(*) Functionality guaranteed in the range – 40°C to +85°C; Timing and Electrical Specifications are guaranteed in the range – 30°C to +85°C.

GENERAL DESCRIPTION

ST5092 is a high performance low power combined PCM CODEC/FILTER device tailored to implement the audio front-end functions required by the next generation low voltage/low power consumption digital terminals.

ST5092 offers a number of programmable functions accessed through a serial control channel that easily interfaces to any classical microcontroller.

The PCM interface supports both non-delayed (normal and reverse) and delayed frame synchronization modes.

ST5092 can be configurated either as a 14-bit linear or as an 8-bit companded PCM coder.

Additionally to the CODEC/FILTER function, ST5092 includes a Tone/Ring/DTMF generator, a sidetone generation, and a buzzer driver output.

ST5092 fulfills and exceeds D3/D4 and CCITT recommendations and ETSI requirements for digital handset terminals.

Main applications include digital mobile phones, as cellular and cordless phones, or any battery powered equipment that requires audio codecs operating at low single supply voltages

This is preliminary information on a new product now in development or undergoing evaluation. Details are subject to change without notice.

PIN CONNECTIONS (Top view)

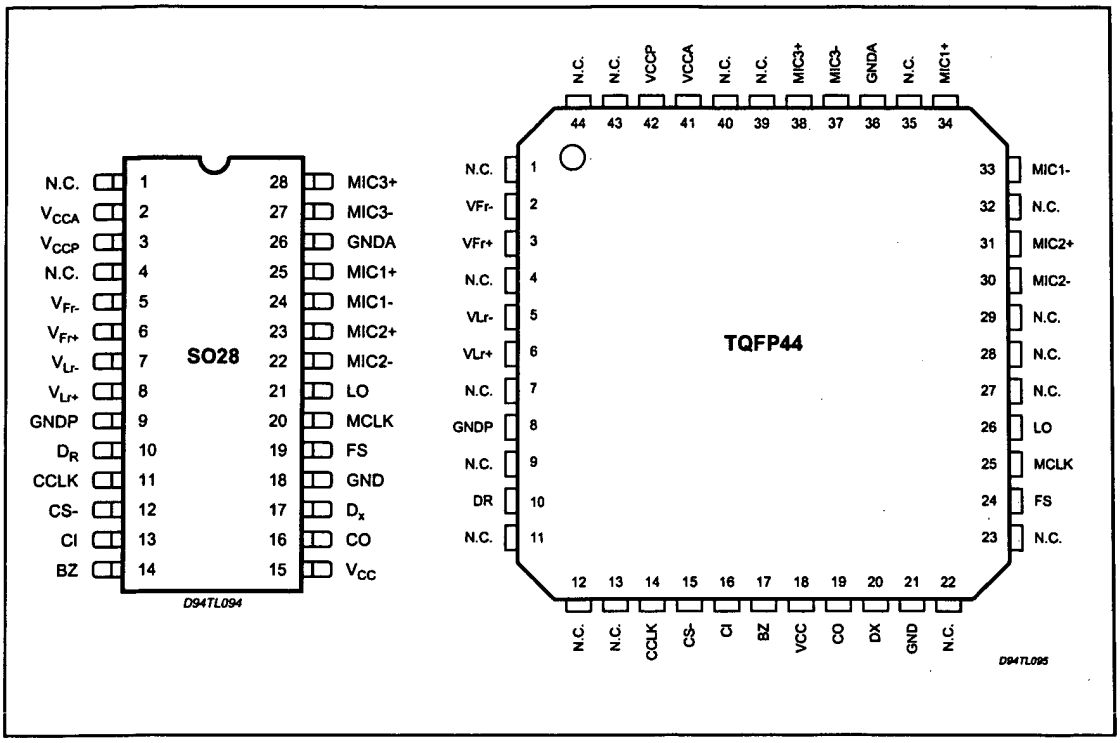

BLOCK DIAGRAM

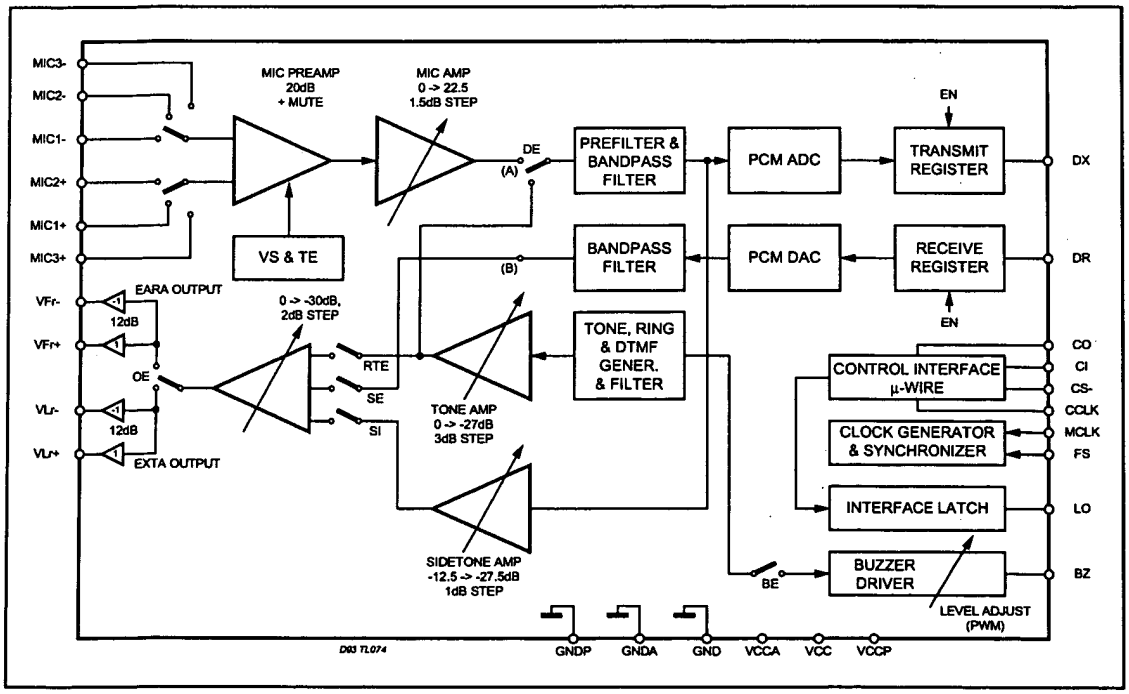

PIN FUNCTIONS (SO28)

Pin	Name	Description
1	N.C.	Not Connected.
2	V_{CCA}	Positive power supply input for the analog section. V_{CC} and V_{CCA} must be directly connected together.
3	V_{CCP}	Positive power supply input for the power section. V_{CCP} and V_{CC} must be connected together.
4	N.C.	Not Connected.
5,6	V_{Fr+}, V_{Fr-} cS	Receive analog earpiece amplifier complementary outputs. These outputs can drive directly earpiece transductor. The signal at this output can be the sum of: - Receive Speech signal from D_R, - Internal Tone Generator, - Sidetone signal.
7,8	V_{Lr+}, V_{Lr-}	Receive analog extra amplifier complementary outputs. The signal at these outputs can be the sum of: - Receive Speech signal from DR, - Internal Tone generator, - Sidetone signal.
9	GNDP	Power ground. V_{Fr} and V_{Lr} driver are referenced to this pin. GNDP and GND must be connected together close to the device.
10	D_R	Receive data input: Data is shifted in during the assigned Received time slots In delayed and non-delayed normal frame synchr. modes voice data byte is shifted in at the MCLK frequency on the falling edges of MCLK, while in non-delayed reverse frame synchr. mode voice data byte is shifted in at the MCLK frequency on the rising edges of MCLK.
11	CCLK	Control Clock input: This clock shifts serial control information into CI and out from CO when the CS- input is low, depending on the current instruction. CCLK may be asynchronous with the other system clocks.
12	CS-	Chip Select input: When this pin is low, control information is written into and out from the ST5092 via CI and CO pins.
13	CI	Control data Input: Serial Control information is shifted into the ST5092 on this pin when CS- is low on the rising edges of CCLK.
14	BZ	Pulse width modulated buzzer driver output.
15	V_{CC}	Positive power supply input for the digital section.
16	CO	Control data Output: Serial control/status information is shifted out from the ST5092 on this pin when CS- is low on the falling edges of CCLK.
17	D_X	Transmit Data ouput: Data is shifted out on this pin during the assigned transmit time slots. Elsewhere D_X output is in the high impedance state. In delayed and non-delayed normal frame synchr. modes, voice data byte is shifted out from TRISTATE output D_X at the MCLK on the rising edge of MCLK, while in non-delayed reverse frame synchr mode voice data byte is shifted out on the falling edge of MCLK.
18	GND	Ground: All digital signals are referenced to this pin.
19	FS	Frame Sync input: This signal is a 8kHz clock which defines the start of the transmit and receive frames. Any of three formats may be used for this signal: non delayed normal mode, delayed mode, and non delayed reverse mode.
20	MCLK	Master Clock Input: This signal is used by the switched capacitor filters and the encoder/decoder sequencing logic. Values must be 512 kHz, 1.536 MHz, 2.048 MHz or 2.56 MHz selected by means of Control Register CRO. MCLK is used also to shift-in and out data.
21	LO	A logic 1 written into DO (CR1) appears at LO pin as a logic 0 A logic 0 written into DO (CR1) appears at LO pin as a logic 1.
22	MIC2-	Second negative high impedance input to transmit pre-amplifier for microphone connection.
23	MIC2+	Second Positive high impedance input to transmit pre-amplifier for microphone connection.
24	MIC1-	Negative high impedance input to transmit pre-amplifier for microphone connection.
25	MIC1+	Positive high impedance input to transmit pre-amplifier for microphone connection.
26	GNDA	Analog Ground: All analog signals are referenced to this pin. GND and GNDA must be connected together close to the device.
27	MIC3-	Third negative high impedance output to transmit preamplifier for microphone connection.
28	MIC3+	Third positive high impedance output to transmit preamplifier for microphone connection.

PIN FUNCTIONS (TQFP44)

Pin	Name	Description
1	N.C.	Not Connected.
2,3	V_{Fr+}, V_{Fr-}	Receive analog earpiece amplifier complementary outputs. These outputs can drive directly earpiece transductor. The signal at this output can be the summ of: - Receive Speech signal from D_R, - Internal Tone Generator, - Sidetone signal.
4	N.C.	Not Connected.
5,6	V_{Lr+}, V_{Lr-}	Receive analog extra amplifier complementary outputs. The signal at these outputs can be the sum of: - Receive Speech signal from DR, - Internal Tone generator, - Sidetone signal.
7	N.C.	Not Connected.
8	GNDP	Power ground. V_{Fr} and V_{Lr} driver are referenced to this pin. GNDP and GND must be connected together close to the device.
9	N.C.	Not Connected.
10	D_R	Receive data input: Data is shifted in during the assigned Received time slots In delayed and non-delayed normal frame synchr. modes voice data byte is shifted in at the MCLK frequency on the falling edges of MCLK, while in non-delayed reverse frame sinchr. mode voice data byte is shifted in at the MCLK frequency on the rising edges of MCLK.
11,12,13	N.C.	Not Connected.
14	CCLK	Control Clock input: This clock shifts serial control information into CI and out from CO when the CS- input is low, depending on the current instruction. CCLK may be asynchronous with the other system clocks.
15	CS-	Chip Select input: When this pin is low, control information is written into and out from the ST5092 via CI and CO pins.
16	CI	Control data Input: Serial Control information is shifted into the ST5092 on this pin when CS- is low on the rising edges of CCLK.
17	BZ	Pulse width modulated buzzer driver output.
18	V_{CC}	Positive power supply input for the digital section.
19	CO	Control data Output: Serial control/status information is shifted out from the ST5092 on this pin when CS- is low on the falling edges of CCLK.
20	D_X	Transmit Data ouput: Data is shifted out on this pin during the assigned transmit time slots. Elsewhere D_X output is in the high impendance state. In delayed and non-delayed normal frame synchr. modes, voice data byte is shifted out from TRISTATE output D_X at the MCLK on the rising edge of MCLK, while in non-delayed reverse frame synchr mode voice data byte is shifted out on the falling edge of MCLK.
21	GND	Ground: All digital signals are referenced to this pin.
22,23	N.C.	Not Connected.
24	FS	Frame Sync input: This signal is a 8kHz clock which defines the start of the transmit and receive frames. Either of three formats may be used for this signal: non delayed normal mode, delayed mode, and non delayed reverse mode.
25	MCLK	Master Clock Input: This signal is used by the switched capacitor filters and the encoder/decoder sequencing logic. Values must be 512 kHz, 1.536 MHz, 2.048 MHz or 2.56 MHz selected by means of Control Register CR0. MCLK is used also to shift-in and out data.
26	LO	A logic 1 written into DO (CR1) appears at LO pin as a logic 0 A logic 0 written into DO (CR1) appears at LO pin as a logic 1.
27,28,29	N.C.	Not Connected.
30	MIC2-	Second negative high impedance input to transmit pre-amplifier for microphone connection.
31	MIC2+	Second Positive high impedance input to transmit pre-amplifier for microphone connection.
32	N.C.	Not Connected.
33	MIC1-	Negative high impedance input to transmit pre-amplifier for microphone connection.
34	MIC1+	Positive high impedance input to transmit pre-amplifier for microphone connection.
35	N.C.	Not Connected.
36	GNDA	Analog Ground: All analog signals are referenced to this pin. GND and GNDA must be connected together close to the device.
37	MIC3-	Third negative high impedance output to transmit preamplifier for microphone connection.
38	MIC3+	Third positive high impedance output to transmit preamplifier for microphone connection.
39,40	N.C.	Not Connected.
41	V_{CCA}	Positive power supply input for the analog section. V_{CC} and V_{CCA} must be directly connected together.
42	V_{CCP}	Positive power supply input for the power section. V_{CCP} and V_{CC} must be connected together.
43,44	N.C.	Not Connected.

FUNCTIONAL DESCRIPTION

I DEVICE OPERATION

I.1 **P wer n initializati n:**

When power is first applied, power on reset circuitry initializes ST5092 and puts it into the power down state. Gain Control Registers for the various programmable gain amplifiers and programmable switches are initialized as indicated in the Control Register description section. All CODEC functions are disabled.

The desired selection for all programmable functions may be intialized prior to a power up command using the MICROWIRE control channel.

I.2 **Power up/down control:**

Following power-on initialization, power up and power down control may be accomplished by writing any of the control instructions listed in Table 1 into ST5092 with "P" bit set to 0 for power up or 1 for power down.

Normally, it is recommended that all programmable functions be initially programmed while the device is powered down. Power state control can then be included with the last programming instruction or in a separate single byte instruction.

Any of the programmable registers may also be modified while ST5092 is powered up or down by setting "P" bit as indicated. When power up or down control is entered as a single byte instruction, bit 1 must be set to a 0.

When a power up command is given, all de-activated circuits are activated, but output Dx will remain in the high impedance state until the second Fs pulse after power up.

I.3 **Power down state:**

Following a period of activity, power down state may be reentered by writing a power down instruction.

Control Registers remain in their current state and can be changed by MICROWIRE control interface.

In addition to the power down instruction, detection of loss MCLK (no transition detected) automatically enters the device in "reset" power down state with Dx output in the high impedance state.

I.4 **Transmit section:**

Transmit analog interface is designed in two stages to enable gains up to 42.5 dB to be realized. Stage 1 is a low noise differential amplifier providing 20 dB gain. A microphone may be capacitevely connected to MIC1+, MIC1- inputs, while the MIC2+ MIC2– and MIC3+ MIC3- inputs may be used to capacitively connect a second microphone or a third microphone respectively or an auxiliary audio circuit. MIC1 or MIC2 or MC3 or transmit mute is selected with bits 6 and 7 of register CR4.

In the mute case, the analog transmit signal is grounded and the sidetone path is also disabled. Following the first stage is a programmable gain amplifier which provides from 0 to 22.5 dB of additional gain in 1.5dB step. The total transmit gain should be adjusted so that, at reference point A, see Block Diagram description, the internal 0 dBm0 voltage is 0.49 Vrms (overload level is 0.7 Vrms). Second stage amplifier gain can be programmed with bits 4 to 7 of CR5.

An active RC prefilter then precedes the 8th order band pass switched capacitor filter. A/D converter can be either a 14-bit linear (bit CM = 0 in register CR0) or can have a compressing characteristics (bit CM = 1 in register CR0) according to CCITT A or MU255 cod begins immediatly at the beginning of the selected Transmit time slot. The total signal delay referenced to the start of the time slot is approximatively 195 µs (due to the transmit filter) plus 125 µs (due to encoding delay), which totals 320 µs. Voice data is shifted out on D_X during the selected time slot on the transmit rising edges of MCLK in delayed or non-delayed normal mode or on the falling edges of MCLK in non-delayed reverse mode.

I.5 **Receive section:**

Voice Data is shifted into the decoder's Receive voice data Register via the D_R pin during the selected time slot on the falling edges of MCLK in delayed or non-delayed normal mode or on the rising edges of MCLK in non-delayed reverse mode.

The decoder consists of either a 14-bit linear or an expanding DAC with A or MU255 law decoding characteristic. Following the Decoder is a 3400 Hz 8th order band-pass switched capacitor filter with integral Sin X/X correction for the 8 kHz sample and hold.

0 dBmO voltage at this (B) reference point (see Block Diagram description) is 0.49 Vrms. A transcient suppressing circuitry ensure interference noise suppression at power up.

The analog speech signal output can be routed either to earpiece (V_{FR+}, V_{FR-} outputs) or to an extra analog output (V_{Lr+}, V_{Lr-} outputs) by setting bits OE and SE (1 and 0 of CR4).

Total signal delay is approximatively 190 µs (filter plus decoding delay) plus 62.5 µs (1/2 frame) which gives approximatively 252 µs.

Differential outputs V_{FR+},V_{FR-} are intended to directly drive an earpiece. Preceding the outputs is a programmable attenuation amplifier, which must

be set by writing to bits 4 to 7 in register CR6. Attenuations in the range 0 to -30 dB relative to the maximum level in 2 dB step can be programmed. The input of this programmable amplifier is the sum of several signals which can be selected by writing to register CR4.:

- Receive speech signal which has been decoded and filtered,
- Internally generated tone signal, (Tone amplitude is programmed with bits 4 to 7 of register CR7),
- Sidetone signal, the amplitude of which is programmed with bits 0 to 3 of register CR5

V_{FR+} and V_{FR-} outputs are capable of driving output power level up to 66mW into differentially connected load impedance of 30 Ω. Piezoceramic receivers up to 50nF can also be driven.

Differential outputs V_{Lr+},V_{Lr-} are intended to directly drive an extra output. Preceding the outputs is a programmable attenuation amplifier, which must be set by writing to bits 0 to 3 in register CR6. Attenuations in the range 0 to -30 dB relative to the maximum level in 2.0 dB step can be programmed. The input of this programmable amplifier can be the sum of signals which can be selected by writing to register CR4:

- Receive speech signal which has been decoded and filtered,
- Internally generated tone signal, (Tone amplitude is programmed with bits 4 to 7 of register CR7),
- Sidetone signal, the amplitude of which is programmed with bits 0 to 3 of register CR5.

V_{Lr+} and V_{Lr-} outputs are capable of driving output power level up to 66mW into differentially connected load impedance of 30 Ω. Piezoceramic receivers up to 50nF can also be driven.

BUZZER OUTPUT:
Single ended output BZ is intended to drive a buzzer, via an external BJT, with a squarewave pulse width modulated (PWM) signal the frequency of which is stored into register CR8.
For some applications it is also possible to amplitude modulate this PWM signal with a squarewave signal having a frequency stored in register CR9.
Maximum load for BZ is 5kΩ and 50pF.

I.6 **Digital Interface** (Fig. 1)
F_S Frame Sync input determines the beginning of frame. It may have any duration from a single cycle of MCLK to a squarewave. Three different relationships may be established between the Frame Sync input and the first time slot of frame by setting bits DM1 and DM0 in register CR1.
Non delayed data mode is similar to long frame timing on ST5080A: first time slot begins nominally coincident with the rising edge of F_S. Alternative is to use delayed data mode, which is similar to short frame sync timing on ST5080A, in which F_S input must be high at least a half cycle of MCLK earlier the frame beginning. In the case of companded code only (bit CM = 1 in register CRO) a time slot assignment circuit on chip may be used with all timing modes, allowing connection to one of the two B1 and B2 voice data channels.
Two data formats are available: in Format 1, time slot B1 corresponds to the 8 MCLK cycles following immediately the rising edge of FS, while time slot B2 corresponds to the 8 MCLK cycles following immediately time slot B1.
In Format 2, time slot B1 is identical to Format 1. Time slot B2 appears two bit slots after time slot B1. This two bits space is left available for insertion of the D channel data.
Data format is selected by bit FF (2) in register CR0. Time slot B1 or B2 is selected by bit TS (1) in Control Register CR1.
Bit EN (2) in control register CR1 enables or disables the voice data transfer on D_X and D_R as appropriate. During the assigned time slot, D_X output shifts data out from the voice data register on the rising edges of MCLK in the case of delayed and non-delayed normal modes or on the falling edges of MCLK in the case of non-delayed reverse mode. Serial voice data is shifted into D_R input during the same time slot on the falling edges of MCLK in the case of delayed and non-delayed normal modes or on the rising edges of MCLK in the case of non-delayed reverse mode.
D_X is in the high impedance Tristate condition when in the non selected time slots.

I.7 **Control Interface:**
Control information or data is written into or read-back from ST5092 via the serial control port consisting of control clock CCLK, serial data input CI and output CO, and Chip Select input, CS-. All control instructions require 2 bytes as listed in Table 1, with the exception of a single byte power-up/down command.
To shift control data into ST5092, CCLK must be pulsed high 8 times while CS- is low. Data on CI input is shifted into the serial input register on the rising edge of each CCLK pulse. After all data is shifted in, the content of the input shift register is decoded, and may indicate that a 2nd byte of control data will follow. This second byte may either be defined by a second byte-wide CS-pulse or may follow the first contiguously, i.e. it is not mandatory for CS- to return high in between the first and second control bytes. At the end of the 2nd control byte, data is loaded into the ap-

Figure 1: Digital Interface Format (*)

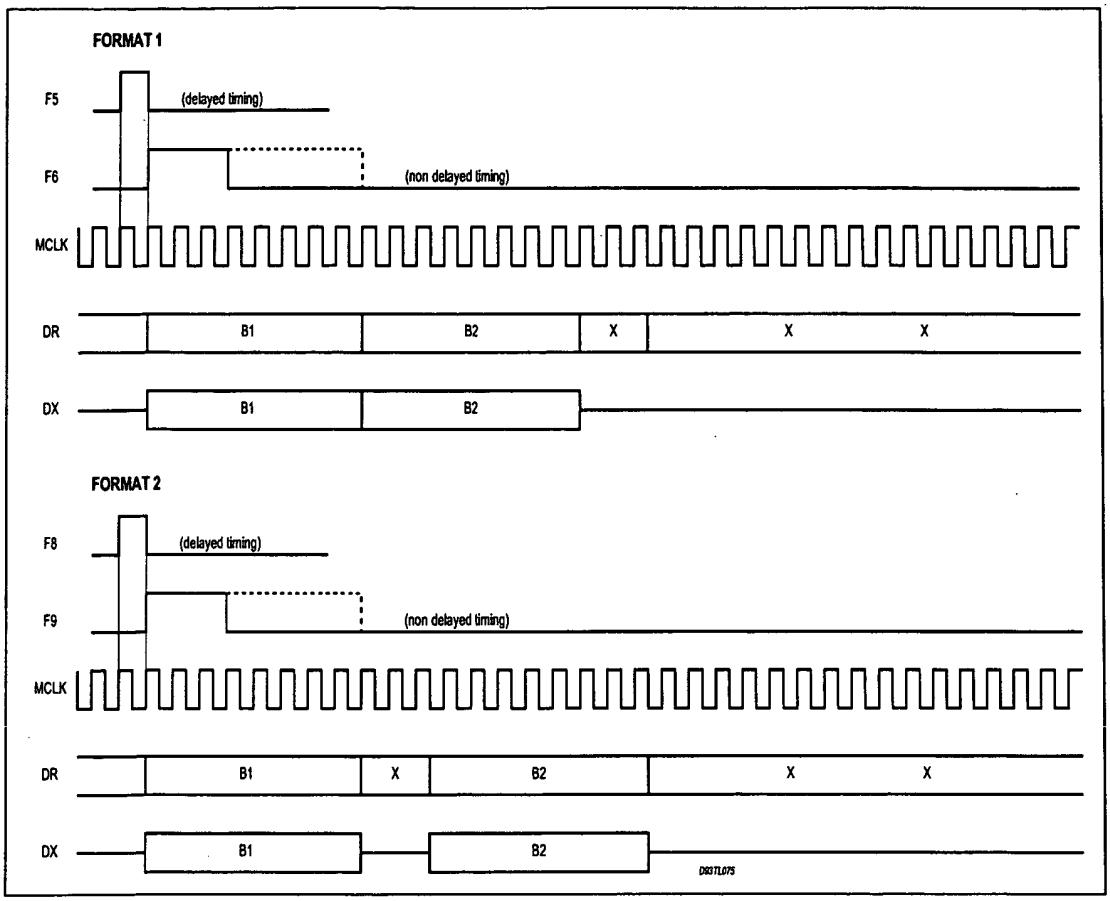

(*) Significant Only For Companded Code.

propriate programmable register. CS- must return high at the end of the 2nd byte.
To read-back status information from ST5092, the first byte of the appropriate instruction is strobed in during the first CS- pulse, as defined in Table 1. CS- must be set low for a further 8 CCLK cycles, during which data is shifted out of the CO pin on the falling edges of CCLK.
When CS- is high, CO pin is in the high impedance Tri-state, enabling CO pins of several devices to be multiplexed together.
Thus, to summarise, 2 byte READ and WRITE instructions may use either two 8-bit wide CS- pulses or a single 16 bit wide CS- pulse.

I.8 **C ntr l channel access t PCM int rface:**
It is possible to access the B channel previously selected in Register CR1 in the case of companded code only.
A byte written into Control Register CR3 will be automatically transmitted from D_X output in the following frame in place of the transmit PCM data.
A byte written into Control Register CR2 will be automatically sent through the receive path to the Receive amplifiers.
In order to implement a continuous data flow from the Control MICROWIRE interface to a B channel, it is necessary to send the control byte on each PCM frame.
A current byte received on D_R input can be read in the register CR2. In order to implement a continuous data flow from a B channel to MICROWIRE interface, it is necessary to read register CR2 at each PCM frame.

II PROGRAMMABLE FUNCTIONS

For both formats of Digital Interface, programmable functions are configured by writing to a number of registers using a 2-byte write cycle.
Most of these registers can also be read-back for verification. Byte one is always register address, while byte two is Data.
Table 1 lists the register set and their respective adresses.

Table 1: Programmable Register Intructions

Function	Address byte								Data byte
	7	6	5	4	3	2	1	0	
Single byte Power up/down	P	X	X	X	X	X	0	X	none
Write CR0	P	0	0	0	0	0	1	X	see CR0 TABLE 2
Read-back CR0	P	0	0	0	0	1	1	X	see CR0
Write CR1	P	0	0	0	1	0	1	X	see CR1 TABLE 3
Read-back CR1	P	0	0	0	1	1	1	X	see CR1
Write Data to receive path	P	0	0	1	0	0	1	X	see CR2 TABLE 4
Read data from D_R	P	0	0	1	0	1	1	X	see CR2
Write Data to D_X	P	0	0	1	1	0	1	X	see CR3 TABLE 5
Write CR4	P	0	1	0	0	0	1	X	see CR4 TABLE 6
Read-back CR4	P	0	1	0	0	1	1	X	see CR4
Write CR5	P	0	1	0	1	0	1	X	see CR5 TABLE 7
Read-back CR5	P	0	1	0	1	1	1	X	see CR5
Write CR6	P	0	1	1	0	0	1	X	see CR6 TABLE 8
Read-back CR6	P	0	1	1	0	1	1	X	see CR6
Write CR7	P	0	1	1	1	0	1	X	see CR7 TABLE 9
Read-back CR7	P	0	1	1	1	1	1	X	see CR7
Write CR8	P	1	0	0	0	0	1	X	see CR8 TABLE 10
Read-back CR8	P	1	0	0	0	1	1	X	see CR8
Write CR9	P	1	0	0	1	0	1	X	see CR9 TABLE 11
Read-back CR9	P	1	0	0	1	1	1	X	see CR9
Write CR10	P	1	0	1	0	0	1	X	see CR10 TABLE 12
Read-back CR10	P	1	0	1	0	1	1	X	see CR10
Write CR11	P	1	0	1	1	0	1	X	see CR11 TABLE 13
Read-back CR11	P	1	0	1	1	1	1	X	see CR11
Write Test Register CR14	P	1	1	1	0	0	1	X	reserved

NOTE 1: bit 7 of the address byte and data byte is always the first bit clocked into or out from: CI and CO pins when MICROWIRE serial port is enabled.
X = reserved: write 0

NOTE 2: "P" bit is Power up/down Control bit. P = 1 Means Power Down.
Bit 1 indicates, if set, the presence of a second byte.

NOTE 3: Bit 2 is write/read select bit.

NOTE 4: Registers CR12, CR13, and CR15 are not accessible.

Table 2: Control Register CR0 Functions

7	6	5	4	3	2	1	0	Function	
F1	F0	CM	MA	IA	FF	B7	DL		
0 0 1 1	0 1 0 1							MCLK = 512 kHz * MCLK = 1.536 MHz MCLK = 2.048 MHz MCLK = 2.560 MHz	
		0 1						Linear code * Companded code	
								Linear Code	Companded Code
			0 0 1 1	0 1 0 1				2-complement * sign and magnitude 2-complement 1-complement	MU-law: CCITT D3-D4 * MU-law: Bare Coding A-law including even bit inversion A-law: Bare Coding
					0 1			B1 and B2 consecutive * B1 and B2 separated	(1) (1)
						0 1		8 bits time-slot * 7 bits time-slot	(1) (1)
							0 1	Normal operation * Digital Loop-back	

*: state at power on initialization

(1): significant in companded mode only

Table 3: Control Register CR1 Functions

7	6	5	4	3	2	1	0	Function	
DM1	DM0	DO	MR	MX	EN	TS			
0 1 1	X 0 1							delayed data timing * non-delayed normal data timing non-delayed reverse data timing	
		0 1						L0 latch set to 1 * L0 latch set to 0	
			0 1					D_R connected to rec. path * CR2 connected to rec. path	(1)
				0 1				Trans path connected to D_X * CR3 connected to D_X	(1)
					0 1			voice data transfer disable * voice data transfer enable	
						0 1		B1 channel selected * B2 channel selected	(1) (1)
							X		

*: state at power on initialization

(1): significant in companded mode only

X: reserved: write 0

Tabl 4: Control Register CR2 Functions

7	6	5	4	3	2	1	0	Function
d7	d6	d5	d4	d3	d2	d1	d0	
msb							lsb	Data sent to Receive path or Data received from D_R input (1)

(1) Significant in companded mode only.

Table 5: Control Registers CR3 Functions

7	6	5	4	3	2	1	0	Function
d7	d6	d5	d4	d3	d2	d1	d0	
msb							lsb	D_X data transmitted (1)

(1) Significant in companded mode only

Table 6: Control Register CR4 Functions

7	6	5	4	3	2	1	0	Function
VS	TE	SI	OE1	OE2	RTE	HPB	SE	
0 0 1 1	0 1 0 1							Transmit input muted * MIC1 Selected MIC2 Selected MIC3 Selected
		0 1						Internal sidetone disabled * Internal sidetone enabled
			0 0 1 1	0 1 0 1				Receive output muted * VFr output selected VLr output selected NOT ALLOWED
					0 1			Ring / Tone to V_{Fr} or V_{Lr} disabled * Ring / Tone to V_{Fr} or V_{Lr} enabled
						0 1		Receive HP filter enabled * Receive HP filter disabled
							0 1	Receive Signal to V_{Fr} or V_{Lr} disabled * Receive Signal to V_{Fr} or V_{Lr} enabled

*: state at power on initialization

X: reserved: write 0

Table 7: Control Register CR5 Functions

7	6	5	4	3	2	1	0	Function
Transmit amplifier				Sidetone amplifier				
0	0	0	0					0 dB gain *
0	0	0	1					1.5 dB gain
-	-	-	-					in 1.5 dB step
1	1	1	1					22.5 dB gain
				0	0	0	0	-12.5 dB gain *
				0	0	0	1	-13.5 dB gain
				-	-	-	-	in 1 dB step
				1	1	1	1	-27.5 dB gain

*: state at power on initialization

Table 8: Control Register CR6 Functions

7	6	5	4	3	2	1	0	Function
Earpiece amplfier [EARA]				Extra amplifier [EXTA]				
0	0	0	0					0 dB gain *
0	0	0	1					-2 dB gain
-	-	-	-					in 2 dB step
1	1	1	1					-30 dB gain
				0	0	0	0	0 dB gain *
				0	0	0	1	-2 dB gain
				-	-	-	-	in 2 dB step
				1	1	1	1	-30 dB gain

*: state at power on initialization

Table 9: Control Register CR7 Functions

7	6	5	4	3	2	1	0	Function		
Tone gain				F1	F2	SN	DE	Attenuation	f1 V_{pp}	f2 V_{pp}
0	0	0	0					0 dB *	1.6(2)	1.26(2)
0	0	0	1					-3 dB		
0	0	1	0					-6 dB		
0	0	1	1					- 9 dB		
0	1	0	0					-12 dB		
0	1	0	1					-15 dB		
0	1	1	0					-18 dB		
0	1	1	1					-21 dB		
1	X	X	0					-24 dB		
1	X	X	1					-27 dB	0.066	0.053
				0	0			f1 and f2 muted *		
				0	1			f2 selected		
				1	0			f1 selected		
				1	1			f1 and f2 in summed mode		
						0		Squarewave signal selected *		
						1		Sinewave signal selected		
							0	Normal operation *		
							1	*Tone / Ring Generator connected to* Transmit path		

*: state at power on initialization

(2): value provided if f1 or f2 is selected alone.
if f1 and f2 are selected in the summed mode, f1=0.89 V_{pp} while f2=0.7 V_{pp}.

X reserved: write 0

Tabl 10: Control Register CR8 Functions

7	6	5	4	3	2	1	0	Function
f17	f16	f15	f14	f13	f12	f11	f10	
msb							lsb	Binary equivalent of the decimal number used to calculate f1

Table 11: Control Register CR9 Functions

7	6	5	4	3	2	1	0	Function
f27	f26	f25	f24	f23	f22	f21	f20	
msb							lsb	Binary equivalent of the decimal number used to calculate f2

Table 12: Control Register CR10 Functions

7	6	5	4	3	2	1	0	Function
						DFT	HFT	
X	X	X	X	X	X			
						0	0	(*) Standard Frequency Tone Range
						0	1	Halved Frequency Tone Range
						1	0	Doubled Frequency Tone Range
						1	1	Forbidden

(*) Default values inserted into the Register at Power On.

X reserved, write 0.

Table 13: Control Register CR11 Functions

7	6	5	4	3	2	1	0	Function
BE	BI	BZ5	BZ4	BZ3	BZ2	BZ1	BZ0	
0 1								Buzzer output disabled (set to 0) * Buzzer output enabled
	0 1							Duty Cycle is intended as the relative width of logic 1 * Duty cycle is intended as the relative width of logic 0
		msb					lsb	Binary equivalent of the decimal number used to calculate the duty cycle.

* state at power on initialization

CONTROL REGISTER CR0
First byte of a READ or a WRITE instruction to Control Register CR0 is as shown in TABLE 1. Second byte is as shown in TABLE 2.

Master Clock Frequency Selection
A master clock must be provided to ST5092 for operation of filter and coding/decoding functions. MCLK frequency can be either 512 kHz, 1.536 MHz, 2.048 MHz or 2.56 MHz.
Bit F1 (7) and F0 (6) must be set during initialization to select the correct internal divider.
Default value is 512 kHz.
Any clock different from the default one must be selected prior a Power-Up instruction.

Coding Law Selection
Bits MA (4) and IA (3) permit selection of Mu-255 law or A law coding with or without even bit inversion if companded code (bit CM = 1) is selected. Bits MA(4) and IA(3) permit selection of 2-complement, 1-complement or sign and magnitude if linear code (bit CM = 0) is selected.

Coding Selection
Bit CM (5) permits selection either of linear coding (14-bit) or companded coding (8-bit). Default value is linear coding.

Digital Interface format (1)
Bit FF(2) = 0 selects digital interface in Format 1 where B1 and B2 channel are consecutive. FF=1 selects Format 2 where B1 and B2 channel are separated by two bits. (See digital interface format section.)

56+8 selection (1)
Bit 'B7' (1) selects capability for ST5092 to take into account only the seven most significant bits of the PCM data byte selected.
When 'B7' is set, the LSB bit on D_R is ignored and LSB bit on D_X is high impedance. This function allows connection of an external "in band" data generator directly connected on the Digital Interface.

Digital l pback
Digital loopback mode is entered by setting DL bit(0) equal 1.
In Digital Loopback mode, data written into Receive PCM Data Register from the selected received time-slot is read-back from that Register in the selected transmit time-slot on D_X.
No PCM decoding or encoding takes place in this mode. Transmit and Receive amplifier stages are muted.

CONTROL REGISTER CR1
First byte of a READ or a WRITE instruction to Control Register CR1 is as shown in TABLE 1. Second byte is as shown in TABLE 3.

Digital Interface Timing
Bit DM1(7) = 0 selects digital interface in delayed timing mode, while DM1 = 1 and DM0 = 0 selects non-delayed normal data timing mode, and DM1 = 1 and DM0 = 1 selects non-delayed reverse data timing mode.
Default is delayed data timing.

Latch output control
Bit DO controls directly logical status of latch output LO: ie, a "ZERO" written in bit DO puts the output LO at logical 1, while a "ONE" written in bit DO sets the output LO to zero.

Microwire access to B channel on receive path (1)
Bit MR (4) selects access from MICROWIRE Register CR2 to Receive path. When bit MR is set high, data written to register CR2 is decoded each frame, sent to the receive path and data input at D_R is ignored.
In the other direction, current PCM data input received at D_R can be read from register CR2 each frame.

Microwire access to B channel on transmit path (1)
Bit MX (3) selects access from MICROWIRE write only Register CR3 to D_X output. When bit MX is set high, data written to CR3 is output at D_X every frame and the output of PCM encoder is ignored.

(1) Significant in companded mode only

	Mu 255 law								True A law even bit inversion								A law without even bit inversion							
	msb							lsb	msb							lsb	msb							lsb
Vin = + full scale	1	0	0	0	0	0	0	0	1	0	1	0	1	0	1	0	1	1	1	1	1	1	1	1
Vin = 0 V	1 0	1 1	1 1	1 1	1 1	1 1	1 1	1 1	1 0	1 1	0 0	1 1	0 0	1 1	0 0	1 1	1 0	0 0	0 0	0 0	0 0	0 0	0 0	0 0
Vin = - full scale	0	0	0	0	0	0	0	0	0	0	1	0	1	0	1	0	0	1	1	1	1	1	1	1

MSB is always the first PCM bit shifted in or out of: ST5092.

Transmit/Rec ive nabling/disabling
Bit 'EN' (2) enables or disables voice data transfer on D_X and D_R pins. When disabled, PCM data from DR is not decoded and PCM time-slots are high impedance on D_X. Default value is disabled.

B-channel selection (1)
Bit TS(1) permits selection between B1 or B2 channels. Default value is B1 channel.

CONTROL REGISTER CR2 (1)
Data sent to receive path or data received from D_R input. Refer to bit MR(4) in "Control Register CR1" paragraph.

CONTROL REGISTER CR3 (1)
D_X data transmitted. Refer to bit MX(3) in "Control Register CR1" paragraph.

CONTROL REGISTER CR4
First byte of a READ or a WRITE instruction to Control Register CR4 is as shown in TABLE 1. Second byte is as shown in TABLE 6.

Transmit Input Selection
MIC1 or MIC2 or MIC3 or transmit mute can be selected with bits 6 and 7 (V_S and TE).
Transmit gain can be adjusted within a 22.5 dB range in 1.5 dB step with Register CR5.

Sidetone Selection
Bit "SI" (5) enables or disables Sidetone circuitry. When enabled, sidetone gain can be adjusted with Register (CR5). When Transmit path is disabled, sidetone circuit is also disabled.

Output Driver Selection
Bits OE1(4) and OE2(3) provide the selection among the earpiece output or the extra amplifier output or both outputs muted.
OE1 = 1 and OE2 = 1 is not allowed.

Ring/Tone signal selection
Bit RTE (2) provide select capability to connect on-chip Ring/Tone generator either to an extra amplifier input or to earpiece amplifier input.

Receive High Pass Filter Selection
Bit HPB (1) provide the selection of the receive high pass filter cutoff frequency.

PCM receive data selection
Bits "SE" (0) provide select capability to connect received speech signal either to an extra amplifier input or to earpiece amplifier input.

CONTROL REGISTER CR5
First byte of a READ or a WRITE instuction to Control Register CR5 is as shown in TABLE 1. Second byte is as shown in TABLE 7.

Transmit gain selection
Transmit amplifier can be programmed for a gain from 0dB to 22.5dB in 1.5dB step with bits 4 to 7.
0 dBmO level at the output of the transmit amplifier (A reference point) is 0.492 Vrms (overload voltage is 0.707 Vrms).

Sidetone attenuation selection
Transmit signal picked up after the switched capacitor low pass filter may be fed back into both Receive amplifiers.
Attenuation of the signal at the output of the sidetone attenuator can be programmed from –12.5dB to -27.5dB relative to reference point A in 1 dB step with bits 0 to 3.

CONTROL REGISTER CR6
First byte of a READ or a WRITE instruction to Control Register CR6 is as shown in TABLE 1. Second byte is as shown in TABLE 8.

Earpiece amplifier gain selection:
Earpiece Receive gain can be programmed in 2 dB step from 0 dB to -30 dB relative to the maximum with bits 4 to 7.
0 dBmO voltage at the output of the amplifier on pins V_{Fr+} and V_{Fr-} is then 1.965 Vrms when 0dB gain is selected down to 61.85 Vrms when -30dB gain is selected.

Extra amplifier gain selection:
Extra Receive amplifier gain can be programmed in 2 dB step from 0 dB to -30 dB relative to the maximum with bits 0 to 3.
0 dBmO voltage on the output of the amplifier on pins V_{Lr+} and V_{Lr-} 1.965 Vrms when 0 dB gain is selected down to 61.85 mVrms when -30 dB gain is selected.

CONTROL REGISTER CR7:
First byte of a READ or a WRITE instruction to Control Register CR7 is as shown in TABLE 1. Second byte is as shown in TABLE 9.

(1) Significant in companded mode only

T ne/Ring amplifi r gain selection
Output level of Ring/Tone generator, before attenuation by programmable attenuator is 1.6 Vpk-pk when f1 generator is selected alone or summed with the f2 generator and 1.26 Vpk-pk when f2 generator is selected alone.
Selected output level can be attenuated down to -27 dB by programmable attenutator by setting bits 4 to 7.

Frequency mode selection
Bits 'F1' (3) and 'F2' (2) permit selection of f1 and/or f2 frequency generator according to TABLE 9.
When f1 (or f2) is selected, output of the Ring/Tone is a squarewave (or a sinewave) signal at the frequency selected in the CR8 (or CR9) Register.
When f1 and f2 are selected in summed mode, output of the Ring/Tone generator is a signal where f1 and f2 frequency are summed.
In order to meet DTMF specifications, f2 output level is attenuated by 2dB relative to the f1 output level.
Frequency temporization must be controlled by the microcontroller.

Waveform selection
Bit 'SN' (1) selects waveform of the output of the Ring/Tone generator. Sinewave or squarewave signal can be selected.

DTMF selection
Bit DE (0) permits connection of Ring/Tone/DTMF generator on the Transmit Data path instead of the Transmit Amplifier output. Earpiece or extra receive output feed-back may be provided by sidetone circuitry by setting bit SI or directly by setting bit RTE in Register CR4. Loudspeaker feed-back may be provided directly by setting bit RTL in Register CR4.

CONTROL REGISTERS CR8 AND CR9
First byte of a READ or a WRITE instruction to Control Register CR8 or CR9 is as shown in TABLE 1. Second byte is respectively as shown in TABLE 10 and 11.
If "standard frequency tone range" is selected, Tone or Ring signal frequency value is defined by the formula:

f1 = CR8 / 0.128 Hz

and

f2 = CR9 / 0.128 Hz

where CR8 and CR9 are decimal equivalents of the binary values of the CR8 and CR9 registers respectively. Thus, any frequency between 7.8 Hz and 1992 Hz may be selected in 7.8 Hz step.
If "halved frequency tone range"is selected, Tone or Ring signal frequency value is defined by the formula:

f1 = CR8 / 0.256 Hz

and

f2 = CR9 / 0.256 Hz

This any frequency between 3.9Hz and 996Hz may be selected in 3.9Hz step.
If "doubled frequency tone range"is selected, Tone or Ring signal frequency value is defined by the formula:

f1 = CR8 / 0.064 Hz

and

f2 = CR9 / 0.064 Hz

Thus any frequency between 15.6Hz and 3984Hz may be selected in 15.6Hz step.

TABLE 12 gives examples for the main frequencies usual for Tone or Ring generation.

CONTROL REGISTER CR10
Bit DFT(1) and HFT(0) permits the selection among "standard frequency tone range" (i.e. from 7.8Hz to 1992Hz in 7.8Hz step), "halved frequency tone range" (i.e. from 3.9Hz to 996Hz in 3.9Hz step), and "doubled frequency tone range" (i.e. from 15.6Hz to 3984Hz in 15.6Hz step) according to the values described in CONTROL REGISTER CR8 and CR9.

CONTROL REGISTER CR11
Bit BE(7) permits connection of a f1 squarewave PWM Ring signal, amplitude modulated or not by a f2 squarewave signal, to buzzer driver output BZ. Bits BZ5 to BZ0 define the duty cycle of the PWM squarewave, according to the following formula:

Duty Cycle = CR11(5 + 0) x 0.78125%

where CR11(5 + 0) is the decimal equivalent of the binary value BZ5 + BZ0.

When BE = 1, if bits F1 = 1 and F2 = 0 in register CR7, a f1 PWM ring signal is present at the buzzer output, while if bits F1 = 1 and F2 = 1 in register CR7 the f1 PWM ring signal is also amplitude modulated by a f2 squarewave frequency. Bit BI (6) allows to chose the logic level at which the duty cycle is referred: BI = 0 means that duty cycle is intended as the relative width of the logic1, while BI = 1 means that duty cycle is intended as the relative width of the logic 0. When BE = 0 (or during power down) BZ = 0 if BI = 0 or BZ = 1 if BI = 1.

Tabl 12: Examples of Usual Frequency Selection (Standard frequency tone range)

Description	f1 value (decimal)	Theoretic value (Hz)	Typical value (Hz)	Error %
Tone 250 Hz	32	250	250	.00
Tone 330 Hz	42	330	328.2	–.56
Tone 425 Hz	54	425	421.9	–.73
Tone 440 Hz	56	440	437.5	–.56
Tone 800 Hz	102	800	796.9	–.39
Tone 1330 Hz	170	1330	1328.1	–.14
DTMF 697 Hz	89	697	695.3	–.24
DTMF 770 Hz	99	770	773.4	+.44
DTMF 852 Hz	109	852	851.6	–.05
DTMF 941 Hz	120	941	937.5	–.37
DTMF 1209 Hz	155	1209	1210.9	+.16
DTMF 1336 Hz	171	1336	1335.9	–.01
DTMF 1477 Hz	189	1477	1476.6	.00
DTMF 1633 Hz	209	1633	1632.8	.00
SOL	50	392	390.6	–.30
LA	56	440	437.5	–.56
SI	63	494	492.2	–.34
DO	67	523.25	523.5	+.04
RE	75	587.33	586.0	–.23
MI flat	80	622.25	625.0	+.45
MI	84	659.25	656.3	–.45
FA	89	698.5	695.3	–.45
FA sharp	95	740	742.2	+.30
SOL	100	784	781.3	–.34
SOL sharp	106	830.6	828.2	–.29
LA	113	880	882.9	+.33
SI	126	987.8	984.4	–.34
DO	134	1046.5	1046.9	+.04
RE	150	1174.66	1171.9	–.23
MI	169	1318.5	1320.4	+.14

TIMING DIAGRAM

Non Delay_d Data Timing Mode (Normal) (*)

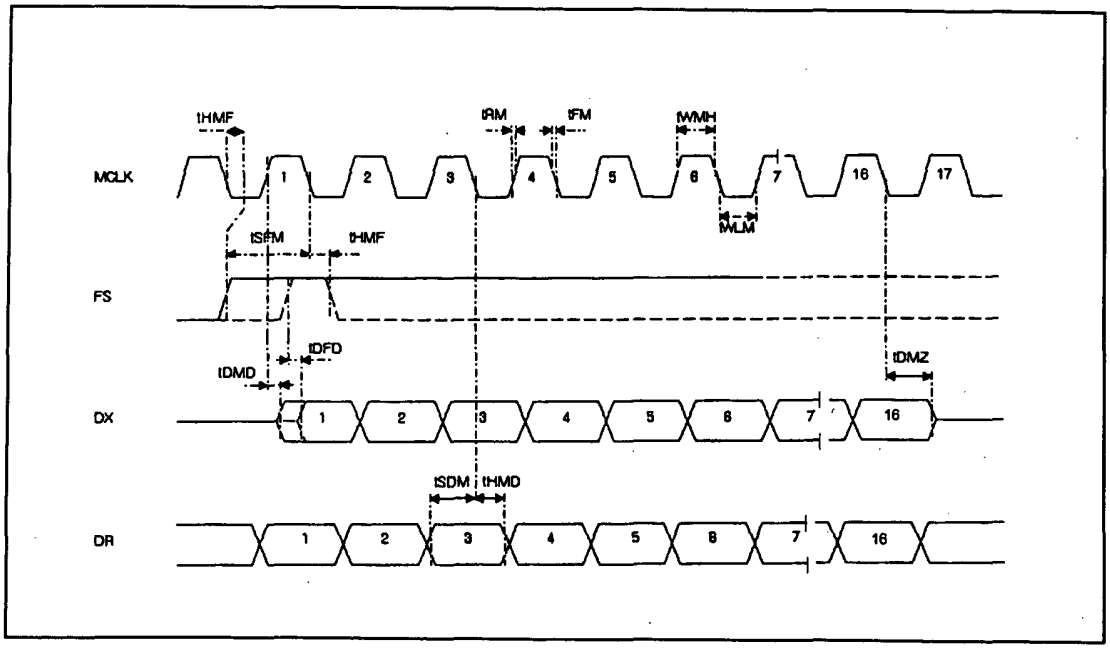

Delayed Data Timing Mode (*)

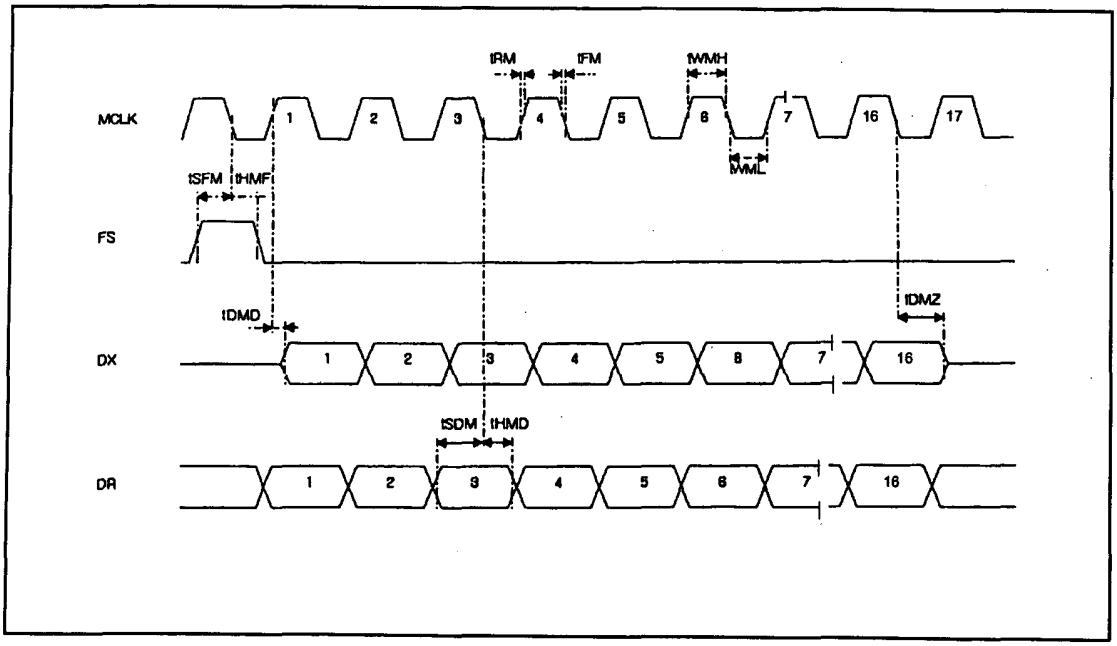

(*) In the case of companded code the timing is applied to 8 bits instead of 16 bits (see ST5080A data sheet)

TIMING DIAGRAM (c ntinued)

Non Delayed Reverse Data Timing Mode (*)

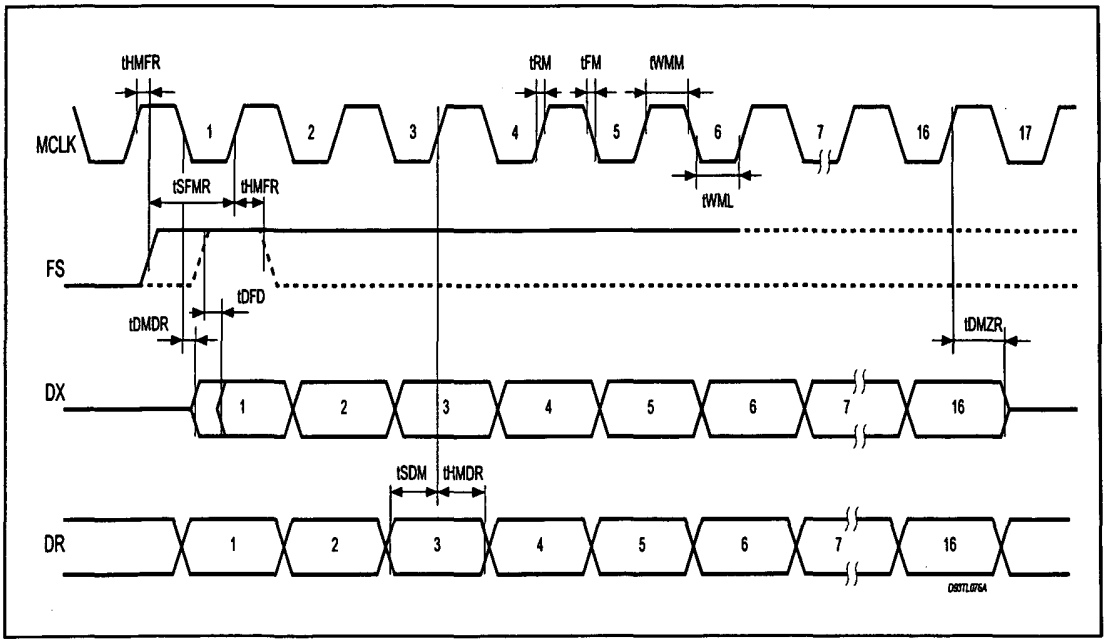

(*) In the case of companded code the timing is applied to 8 bits instead of 16 bits.

Serial Control Timing (MICROWIRE MODE)

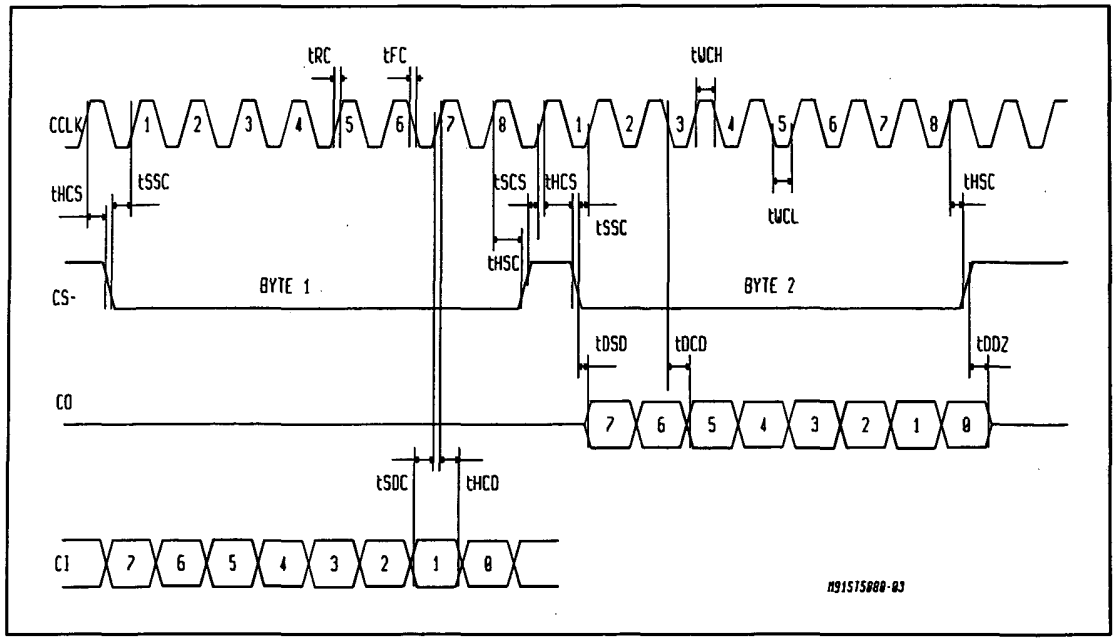

ABSOLUTE MAXIMUM RATINGS

Parameter	Value	Unit
V_{CC} to GND	5.5	V
Voltage at MIC ($V_{CC} \leq 3.6V$)	V_{CC} +1 to GND -1	V
Current at V_{Fr} and V_{Lr}	± 100	mA
Current at any digital output	± 50	mA
Voltage at any digital input ($V_{CC} \leq 3.6V$); limited at ± 50mA	V_{CC} + 1 to GND - 1	V
Storage temperature range	- 65 to + 150	°C
Lead Temperature (wave soldering, 10s)	+ 260	°C

TIMING SPECIFICATIONS (unless otherwise specified, V_{CC} = 2.7V to 3.6V, T_A = –30°C to 85°C ; typical characteristics are specified V_{CC} = 3.0V, T_A = 25 °C; all signals are referenced to GND, see Note 5 for timing definitions)

NOTICE: All timing specifications can be changed.

MASTER CLOCK TIMING

Symbol	Parameter	Test Condition	Min.	Typ.	Max.	Unit
f_{MCLK}	Frequency of MCLK	Selection of frequency is programmable (see table 2)		512 1.536 2.048 2.560		kHz MHz MHz MHz
t_{WMH}	Period of MCLK high	Measured from V_{IH} to V_{IH}	80			ns
t_{WML}	Period of MCLK low	Measured from V_{IL} to V_{IL}	80			ns
t_{RM}	Rise Time of MCLK	Measured from V_{IL} to V_{IH}			30	ns
t_{FM}	Fall Time of MCLK	Measured from V_{IH} to V_{IL}			30	ns

PCM INTERFACE TIMING

Symbol	Parameter	Test Condition	Min.	Typ.	Max.	Unit
t_{HMF}	Hold Time MCLK low to FS low		0			ns
t_{SFM}	Setup Time, FS high to MCLK low		30			ns
t_{DMD}	Delay Time, MCLK high to data valid	Load = 100 pf			100	ns
t_{DMZ}	Delay Time, MCLK low to DX disabled		10		100	ns
t_{DFD}	Delay Time, FS high to data valid	Load = 100 pf ; Applies only if FS rises later than MCLK rising edge in Non Delayed Mode only			100	ns
t_{SDM}	Setup Time, D_R valid to MCLK receive edge		20			ns
t_{HMD}	Hold Time, MCLK low to D_R invalid		10			ns
t_{HMFR}	Hold Time MCLK High to FS low		30			ns
t_{SFMR}	Setup Time, FS high to MCLK High		30			ns
t_{DMDR}	Delay Time, MCLK low to data valid	Load = 100pF			100	ns
t_{DMZR}	Delay Time, MCLK High to DX disabled		10		100	ns
t_{HMDR}	Hold Time, MCLK High to D_R invalid		20			ns

SERIAL CONTROL PORT TIMING

Symbol	Parameter	Test Condition	Min.	Typ.	Max.	Unit
f_{CCLK}	Frequency of CCLK				2.048	MHz
t_{WCH}	Period of CCLK high	Measured from V_{IH} to V_{IH}	160			ns
t_{WCL}	Period of CCLK low	Measured from V_{IL} to V_{IL}	160			ns
t_{RC}	Rise Time of CCLK	Measured from V_{IL} to V_{IH}			50	ns
t_{FC}	Fall Time of CCLK	Measured from V_{IH} to V_{IL}			50	ns
t_{HCS}	Hold Time, CCLK high to CS– low		10			ns
t_{SSC}	Setup Time, CS– low to CCLK high		50			ns
t_{SDC}	Setup Time, CI valid to CCLK high		50			ns
t_{HCD}	Hold Time, CCLK high to CI invalid		50			ns
t_{DCD}	Delay Time, CCLK low to CO data valid	Load = 100 pF			80	ns
t_{DSD}	Delay Time, CS–low to CO data valid				50	ns
t_{DDZ}	Delay Time CS–high or 8th CCLK low to CO high impedance whichever comes first		10		80	ns
t_{HSC}	Hold Time, 8th CCLK high to CS– high		100			ns
t_{SCS}	Set up Time, CS– high to CCLK high		100			ns

Note 5: A signal is valid if it is above V_{IH} or below V_{IL} and invalid if it is between V_{IL} and V_{IH}.
For the purpoes of this specification the following conditions apply:
a) All input signal are defined as: $V_{IL} = 0.2V_{CC}$, $V_{IH} = 0.8V_{CC}$, $t_R < 10ns$, $t_F < 10ns$.
b) Delay times are measured from the inputs signal valid to the output signal valid.
c) Setup times are measured from the data input valid to the clock input invalid.
d) Hold times are measured from the clock signal valid to the data input invalid.

ELECTRICAL CHARACTERISTICS (unless otherwise specified, V_{CC} = 2.7V to 3.6V, T_A = –30°C to 85°C ; typical characteristic are specified at V_{CC} = 3.0V, T_A = 25°C ; all signals are referenced to GND)

DIGITAL INTERFACES

Symbol	Parameter	Test Condition		Min.	Typ.	Max.	Unit
V_{IL}	Input Low Voltage	All digital inputs	DC			$0.3V_{CC}$	V
			AC			$0.2V_{CC}$	V
V_{IH}	Input High Voltage	All digital inputs	DC	$0.7V_{CC}$			V
			AC	$0.8V_{CC}$			V
V_{OL}	Output Low Voltage	All digital outputs, I_L = 10µA All digital outputs, I_L = 2mA				0.1 0.4	V V
V_{OH}	Output High Voltage	All digital outputs, I_L = 10µA All digital outputs, I_L = 2mA		V_{CC}-0.1 V_{CC}-0.4			V V
I_{IL}	Input Low Current	Any digital input, GND < V_{IN} < V_{IL}		-10		10	µA
I_{IH}	Input High Current	Any digital input, V_{IH} < V_{IN} < V_{CC}		-10		10	µA
I_{OZ}	Output Current in High impedance (Tri-state)	D_X and CO		-10		10	µA

A.C. TESTING INPUT, OUTPUT WAVEFORM

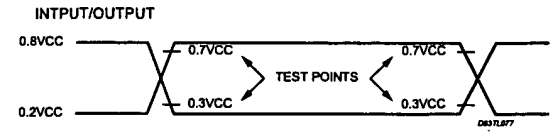

AC Testing: inputs are driven at $0.8V_{CC}$ for a logic "1"and 0.2VCC for a logic "0 ". Timing measurements are made at $0.7V_{CC}$ for a logic "1"and $0.3V_{CC}$ for a logic "0".

ANALOG INTERFACES

Symbol	Parameter	Test Condition	Min.	Typ.	Max.	Unit
I_{MIC}	Input Leakage	GND < V_{MIC} < V_{CC}	-100		+100	µA
R_{MIC}	Input Resistance	GND < V_{MIC} < V_{CC}	50			kΩ
R_{LVFr}	Load Resistance (*)	V_{Fr+} to V_{Fr-}	30			Ω
C_{LVFr}	Load Capacitance (*)	From V_{Fr+} to V_{Fr-}		50		nF
R_{OVFr0}	Output Resistance	Steady zero PCM code applied to DR; I = ± 1mA		1.0		Ω
V_{OSVFr0}	Differential offset: Voltage at V_{Fr+}, V_{Fr-}	Alternating ± zero PCM code applied to DR maximum receive gain; R_L = 100Ω	-100		+100	mV
R_{LVLr}	Load Resistance (*)	V_{Lr+} to V_{Lr-}	30			Ω
C_{LVLr}	Load Capacitance (*)	from V_{Lr+} to V_{Lr-}		50		nF
R_{OLVr0}	Output Resistance	Steady zero PCM code applied to DR; I ± 1mA		1		Ω
V_{OSVLr0}	Differential offset Voltage at V_{Lr+}, V_{Lr-}	Alternating ± zero PCM code applied to DR maximum receive gain; R_L = 50Ω	–100		+100	mV

(*) See application note for V_{Fr} and V_{Lr} connections.

POWER DISSIPATION

Symbol	Parameter	Test Condition	Min.	Typ.	Max.	Unit
I_{CC0}	Power down Current	CCLK,CI = 0.1V; CS = V_{CC}-0.1V		0.5	5	µA
I_{CC1}	Power Up Current	V_{Lr+}, V_{Lr-} and V_{Fr+}, V_{Fr-} not loaded		5	8	mA

TRANSMISSION CHARACTERISTICS (unless otherwise specified, V_{CC} = 2.7V to 3.6V, T_A = –30°C to 85°C; typical characteristics are specified at V_{CC} = 3.0V, T_A = 25°C, MIC1/2/3 = 0dBm0, D_R = –6dBm0 PCM code, f = 1015.625 Hz; all signal are referenced to GND)

AMPLITUDE RESPONSE (Maximum, Nominal, and Minimum Levels)
Transmit path - Absolute levels at MIC1 / MIC2 / MIC3

Parameter	Test Condition	Min.	Typ.	Max.	Unit
0 dBm0 level	Transmit Amps connected for 20dB gain		49.26		mV_{RMS}
Overload level			70.71		mV_{RMS}
0 dBm0 level	Transmit Amps connected for 42.5dB gain		3.694		mV_{RMS}
Overload level			5.302		mV_{RMS}

TRANSMISSION CHARACTERISTICS (continued)

AMPLITUDE RESPONSE (Maximum, Nominal, and Minimum Levels)
Receive path - Absolute levels at V_{FR} (Differentially measured)

Parameter	Test Condition	Min.	Typ.	Max.	Unit
0 dBM0 level	Receive Amp programmed for 0dB gain		1.965		V_{RMS}
0 dBM0 level	Receive Amp programmed for - 30dB attenuation		61.85		mV_{RMS}

AMPLITUDE RESPONSE (Maximum, Nominal, and Minimum Levels)
Receive path - Absolute levels at V_{Lr} (Differentially measured)

Parameter	Test Condition	Min.	Typ.	Max.	Unit
0 dBM0 level	Receive Amp programmed for 0dB gain		1.965		V_{RMS}
0 dBM0 level	Receive Amp programmed for - 30dB gain		61.85		mV_{RMS}

AMPLITUDE RESPONSE
Transmit path

Symbol	Parameter	Test Condition	Min.	Typ.	Max.	Unit
G_{XA}	Transmit Gain Absolute Accuracy	Transmit Gain Programmed for minimum. Measure deviation of Digital PCM Code from ideal $0dB_{m0}$ PCM code at D_X	-0.5		0.5	dB
G_{XAG}	Transmit Gain Variation with programmed gain	Measure Transmit Gain over the range from Maximum to minimum setting. Calculate the deviation from the programmed gain relative to GXA, i.e. $G_{AXG} = G_{actual} - G_{prog.} - G_{XA}$	-0.5		0.5	dB
G_{XAT}	Transmit Gain Variation with temperature	Measured relative to G_{XA}. min. gain < G_X < Max. gain	-0.1		0.1	dB
G_{XAV}	Transmit Gain Variation with supply	Measured relative to G_{XA} G_X = Minimum gain	-0.1		0.1	dB
G_{XAF}	Transmit Gain Variation with frequency	Relative to 1015,625 Hz, multitone test technique used. min. gain < G_X < Max. gain f = 60 Hz f = 100 Hz f = 200 Hz f = 300 Hz f = 400 Hz to 3000 Hz f = 3400 Hz f = 4000 Hz f = 4600 Hz (*) f = 8000 Hz (*)	 -1.5 -0.5 -1.5 	 	 0.5 0.5 0.0 -14 -35 -47	 dB dB dB dB dB dB dB dB
G_{XAL}	Transmit Gain Variation with signal level	Sinusoidal Test method. Reference Level = -10 dBm0 V_{MIC} = -40 dBm0 to +3 dBm0 V_{MIC} = -50 dBm0 to -40 dBm0 V_{MIC} = -55 dBm0 to -50 dBm0	 -0.5 -0.5 -1.2	 	 0.5 0.5 1.2	 dB dB dB

(*) The limit at frequencies between 4600Hz and 8000Hz lies on a straight line connecting the two frequencies on a linear (dB) scale versus log (Hz) scale.

AMPLITUDE RESPONSE

Receive path

Symbol	Parameter	Test Condition	Min.	Typ.	Max.	Unit
G_{RAE}	Receive Gain Absolute Accuracy	Receive gain programmed for maximum Apply -6 dB_{m0} PCM code to D_R Measure V_{Fr+}	-0.5		0.5	dB
G_{RAL}	Receive Gain Absolute Accuracy	Receive gain programmed for maximum Apply -6 dB_{m0} PCM code to D_R Measure V_{Lr+}	-0.5		0.5	dB
G_{RAGE}	Receive Gain Variation with programmed gain	Measure V_{Fr} Gain over the range from Maximum to minimum setting. Calculate the deviation from the programmed gain relative to GRAE, i.e. $G_{RAGE} = G_{actual} - G_{prog.} - G_{RAE}$	-0.5		0.5	dB
G_{RAGL}	Receive Gain Variation with programmed gain	Measure V_{Lr} Gain over the range from Maximum to minimum setting. Calculate the deviation from the programmed gain relative to GRAL, i.e. $G_{RAGL} = G_{actual} - G_{prog.} - G_{RAL}$	-0.5		0.5	dB
G_{RAT}	Receive Gain Variation with temperature	Measured relative to GRA. (V_{Lr} and V_{Fr}) min. gain < GR < Max. gain	-0.1		0.1	dB
G_{RAV}	Receive Gain Variation with Supply	Measured relative to GRA. (V_{Lr} and V_{Fr}) G_R = Maximum Gain	-0.1		0.1	dB
G_{RAF}	Receive Gain Variation with frequency (V_{Lr} and V_{Fr}) HPB = 0	Relative to 1015,625 Hz, multitone test technique used. min. gain < G_R < Max. gain f = 60Hz f = 100Hz f = 200 Hz f = 300 Hz f = 400 Hz to 3000 Hz f = 3400 Hz f = 4000 Hz	 -1.5 -0.5 -1.5 	 	 -20 -12 -2 0.5 0.5 0.0 -14	 dB dB dB dB dB dB dB
	Receive Gain Variation with frequency (V_{Lr} and V_{Fr}) HPB = 1	Relative to 1015,625 Hz, multitone test technique used. min. gain < G_R < Max. gain f = 50Hz f = 100 Hz to 3000 Hz f = 3400 Hz f = 4000 Hz	 -1.5 -0.5 -1.5 	 	 0.5 0.5 0.0 -14	 dB dB dB dB
$G_{RAL\,E}$	Receive Gain Variation with signal level (V_{Fr})	Sinusoidal Test Method Reference Level = –10 dBm0 D_R = -40 dBm0 to -3 dBm0 D_R = -50 dBm0 to -40 dBm0 D_R = -55 dBm0 to -50 dBm0	 -0.5 -0.5 -1.2	 	 0.5 0.5 1.2	 dB dB dB
$G_{RAL\,L}$	Receive Gain Variation with signal level (V_{Lr})	Sinusoidal Test Method Reference Level = –10 dBm0 D_R = -40 dBm0 to -3 dBm0 D_R = -50 dBm0 to -40 dBm0 D_R = -55 dBm0 to -50 dBm0	 -0.5 -0,5 -1.2	 	 0.5 0.5 1.2	 dB dB dB

ENVELOPE DELAY DISTORTION WITH FREQUENCY

Symbol	Parameter	Test Condition	Min.	Typ.	Max.	Unit
DXA	Tx Delay, Absolute	f = 1600 Hz		320		µs
DXR	Tx Delay, Relative	f = 500 - 600 Hz f = 600 - 800 Hz f = 800 - 1000 Hz f = 1000 - 1600 Hz f = 1600 - 2600 Hz f = 2600 - 2800 Hz f = 2800 - 3000 Hz		290 180 50 20 55 80 180		µs µs µs µs µs µs µs
DRA	Rx Delay, Absolute	f = 1600 Hz		280		µs
DRR	Rx Delay, Relative	f = 500 - 600 Hz f = 600 - 800 Hz f = 800 - 1000 Hz f = 1000 - 1600 Hz f = 1600 - 2600 Hz f = 2600 - 2800 Hz f = 2800 - 3000 Hz		200 110 50 20 65 100 220		µs µs µs µs µs µs µs

NOISE

Symbol	Parameter	Test Condition	Min.	Typ.	Max.	Unit
NXP	Tx Noise, P weighted (up to 35dB)	V_{MIC} = 0V, DE = 0		-75	-70	dBm0p
NRP	Rx Noise, A weighted (max. gain)	Receive PCM code = Positive Zero SI = 0 and RTE = 0		120	150	µVrms (*)
NRS	Noise, Single Frequency	MIC = 0V, Loop-around measurament from f = 0 Hz to 100 kHz		-50		dBm0
PPSRx	PSRR, Tx	MIC = 0V, V_{CC} = 3.3 V_{DC} + 50 mV_{rms}; f = 0Hz to 50KHz	30	60		dB
PPSRp	PSRR, Rx	PCM Code equals Positive Zero, V_{CC} = 3.3 VDC + 50 mVrms, f = 0 Hz - 4 kHz f = 4 kHz - 50 kHz	 30 30	 70 70		 dB dB
SOS	Spurious Out-Band signal at the output	DR input set to -6 dBm0 PCM code 300 - 3400 Hz Input PCM Code applied at DR 4600 Hz - 5600 Hz 5600 Hz - 7600 Hz 7600 Hz - 8400 Hz			 -40 -50 -50	 dB dB dB

(*) A Weighted

DISTORTION

Symbol	Parameter	Test Condition	Min.		Typ.	Max.	Unit
S_{TDX} (*)	Signal to Total Distortion (up to 35dB gain)	Sinusoidal Test Method (measured using linear 300 to 3400 weighting)		#			
	Typical values are measured with 30.5dB gain	Level = 0 dBm0	56	56	65		dB
		Level = -6 dBm0	50	50	64		dB
		Level = -10 dBm0	48	48	61		dB
		Level = -20 dBm0	43	43	52		dB
		Level = -30 dBm0	38	37.5	42		dB
		Level = -40 dBm0	29	28.5	31		dB
		Level = -45 dBm0	24	23	26		dB
		Level = -55 dBm0	15	13	16		dB
S_{DFx}	Single Frequency Distortion transmit	0 dBm0 input signal			-80	-56	dB
S_{TDRE} (*)	Signal to Total Distortion (VFr) (up to 20dB attenuation)	Sinusoidal Test Method (measured using linear 300 to 3400 weighting)					
	Typical values are measured with 20dB attenuation.	Level = -6 dBm0		50	64		dB
		Level = -10 dBm0		48	62		dB
		Level = -20 dBm0		43	53		dB
		Level = -30 dBm0		38	43		dB
		Level = -40 dBm0		29	33		dB
		Level = -45 dBm0		24	28		dB
		Level = -55 dBm0		15	18		dB
S_{DFr}	Single Frequency Distortion receive (V_{Fr})	-6 dBm0 input signal			-80	-50	dB
S_{TDRL} (*)	Signal to Total Distortion (VLr) (up to 20dB attenuation)	Sinusoidal Test Method (measured using linear 300 to 3400 weighting)					
	Typical values are measured with 20dB attenuation	Level = -6 dBm0		50	64		dB
		Level = -10 dBm0		48	62		dB
		Level = -20 dBm0		43	53		dB
		Level = -30 dBm0		38	43		dB
		Level = -40 dBm0		29	33		dB
		Level = -45 dBm0		24	28		dB
		Level = -55 dBm0		15	18		dB
S_{DLr}	Single Frequency Distortion receive (V_{Lr})	-6 dBm0 input signal			-80	-50	dB
IMD	Intermodulation	Loop-around measurement Voltage at MIC = -10 dBm0 to -27 dBm0, 2 Frequencies in the range 300 - 3400 Hz			-75	-46	dB

(*) The limit curve shall be determined by straight lines joining successive coordinates given in the table.

(#) Lower limits used during the automatic testing to avoid unrealistic yield loss due to ±2dB imprecision of time-limited noise measurements.

CROSSTALK

Symbol	Parameter	Test Condition	Min.	Typ.	Max.	Unit
C_{Tx-r}	Transmit to Receive	Transmit Level = 0 dBm0, f = 300 - 3400 Hz DR = Quiet PCM Code		-100	-65	dB
C_{Tr-x}	Receive to Transmit	Receive Level = -6 dBm0, f = 300 - 3400 Hz MIC = 0V		-80	-65	dB

APPLICATIONS

Application Notes for Microphone Connections

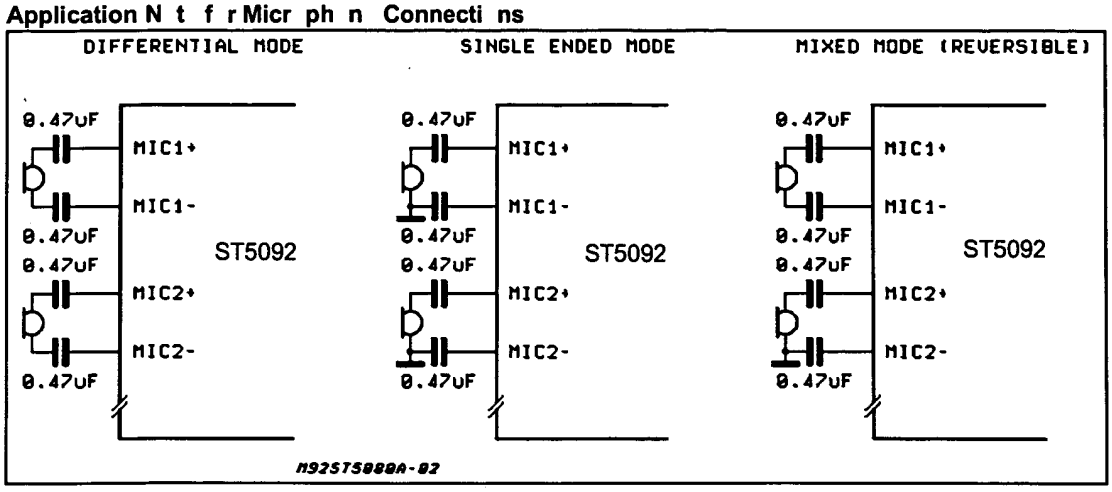

Application Note for V_{Fr} and V_{Lr} Connections

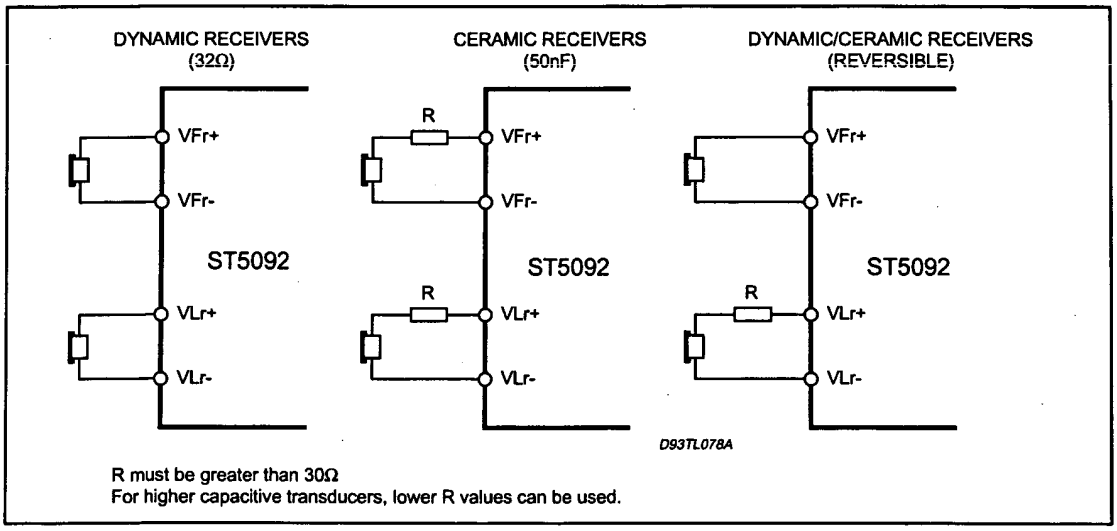

R must be greater than 30Ω
For higher capacitive transducers, lower R values can be used.

POWER SUPPLIES

While pins of ST5092 device are well protected against electrical misuse, it is recommended that the standard CMOS practise of applying GND before any other connections are made should always be followed. In applications where the printed circuit card may be plugged into a hot socket with power and clocks already present, an extra long ground pin on the connector should be used.

To minimize noise sources, all ground connections to each device should meet at a common point as close as possible to the GND pin in order to prevent the interaction of ground return currents flowing through a common bus impedance. A power supply decoupling capacitor of 0.1 µF should be connected from this common point to Vcc as close as possible to the device pins.

TQFP44 (10 x 10) PACKAGE MECHANICAL DATA

DIM.	mm			inch		
	MIN.	TYP.	MAX.	MIN.	TYP.	MAX.
A			1.60			0.063
A1	0.05		0.15	0.002		0.006
A2	1.35	1.40	1.45	0.053	0.055	0.057
B	0.30	0.37	0.45	0.012	0.014	0.018
C	0.09		0.20	0.004		0.008
D		12.00			0.472	
D1		10.00			0.394	
D3		8.00			0.315	
e		0.80			0.031	
E		12.00			0.472	
E1		10.00			0.394	
E3		8.00			0.315	
L	0.45	0.60	0.75	0.018	0.024	0.030
L1		1.00			0.039	
K	0°(min.), 3.5°(typ.), 7°(max.)					

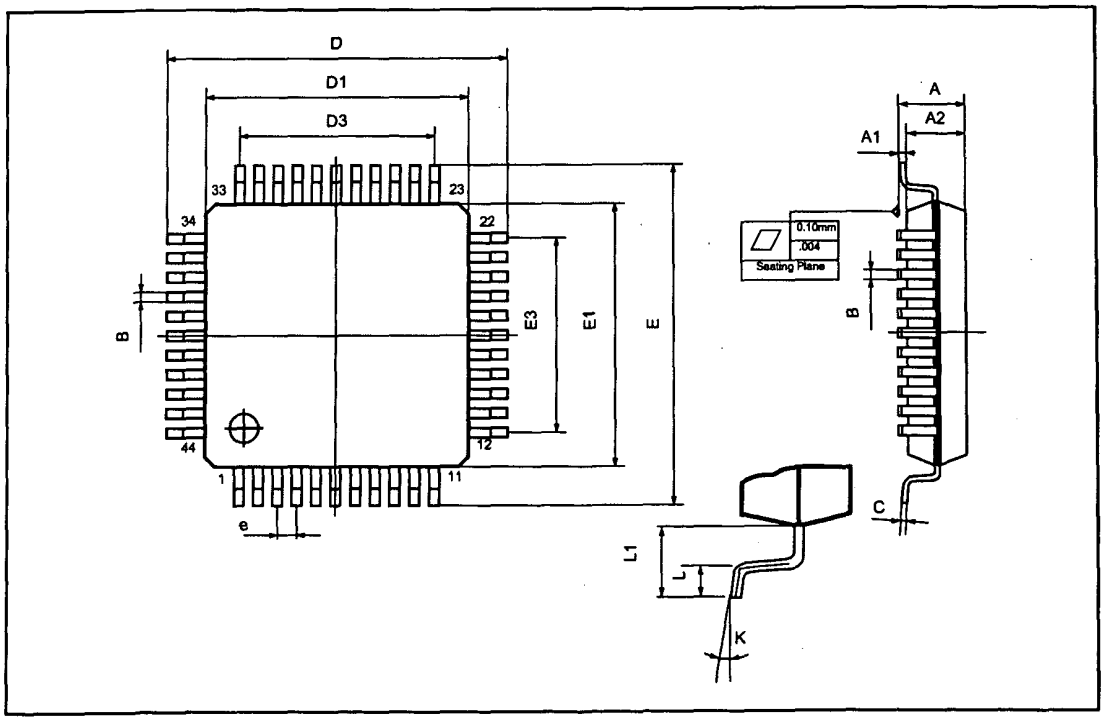

SO28 PACKAGE AND MECHANICAL DATA

DIM.	mm			inch		
	MIN.	TYP.	MAX.	MIN.	TYP.	MAX.
A			2.65			0.104
a1	0.1		0.3	0.004		0.012
b	0.35		0.49	0.014		0.019
b1	0.23		0.32	0.009		0.013
C		0.5			0.020	
c1	45° (typ.)					
D	17.7		18.1	0.697		0.713
E	10		10.65	0.394		0.419
e		1.27			0.050	
e3		16.51			0.65	
F	7.4		7.6	0.291		0.299
L	0.4		1.27	0.016		0.050
S	8° (max.)					

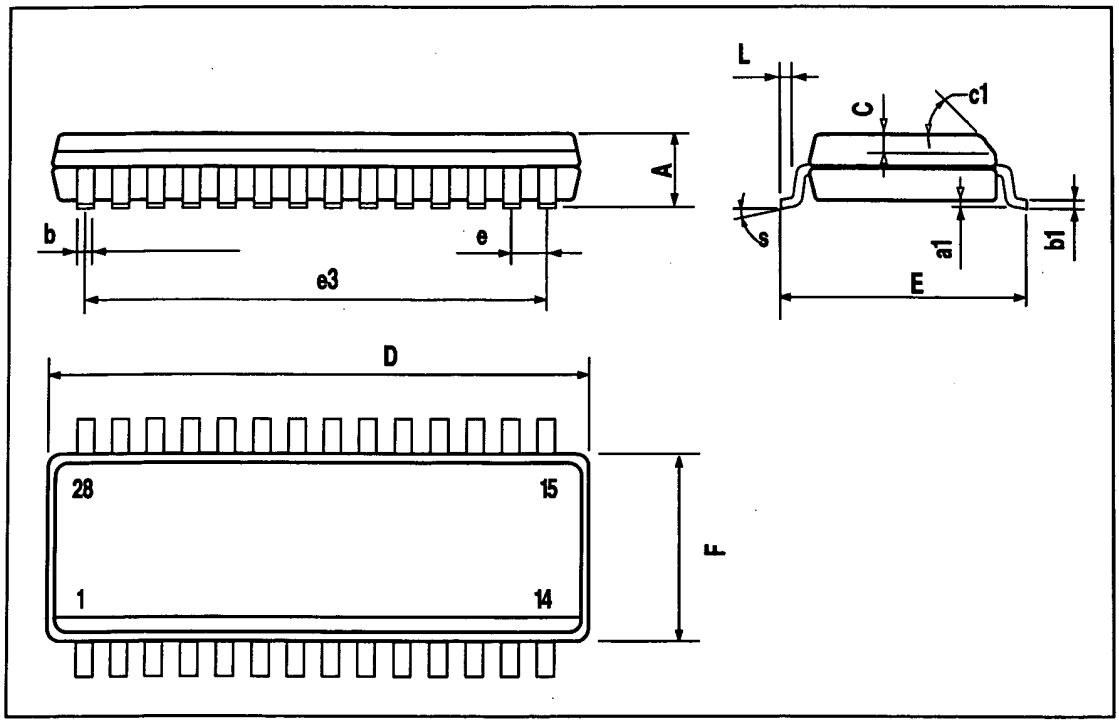

Information furnished is believed to be accurate and reliable. However, SGS-THOMSON Microelectronics assumes no responsibility for the consequences of use of such information nor for any infringement of patents or other rights of third parties which may result from its use. No license is granted by implication or otherwise under any patent or patent rights of SGS-THOMSON Microelectronics. Specification mentioned in this publication are subject to change without notice. This publication supersedes and replaces all information previously supplied. SGS-THOMSON Microelectronics products are not authorized for use as critical components in life support devices or systems without express written approval of SGS-THOMSON Microelectronics.

© 1997 SGS-THOMSON Microelectronics – Printed in Italy – All Rights Reserved
SGS-THOMSON Microelectronics GROUP OF COMPANIES

Australia - Brazil - Canada - China - France - Germany - Hong Kong - Italy - Japan - Korea - Malaysia - Malta - Morocco - The Netherlands - Singapore - Spain - Sweden - Switzerland - Taiwan - Thailand - United Kingdom - U.S.A.

17611 U.S. PTO
06/20/03

Rev. 01/03
PATENTS
Modified PTO 1082
For A Small Entity

17437 U.S. PTO
10/600975
06/20/03

Attorney Docket No. MES/002 CON

Applicant : Michael E. Shanahan

For : METHODS AND APPARATUSES FOR PROGRAMMING USER-DEFINED INFORMATION INTO ELECTRONIC DEVICES

EXPRESS MAIL CERTIFICATION

"Express Mail" mailing label number EV132183489US

Date of Deposit June 20, 2003

I hereby certify that this transmittal letter and the other papers and fees identified in this transmittal letter as being transmitted herewith are being deposited with the United States Postal Service "Express Mail Post Office to Addressee" service under 37 C.F.R. § 1.10 on the date indicated above and are addressed to the Hon. Commissioner for Patents, P.O. Box 1450, Alexandria VA, 22231-1450.

MICHAEL SHANAHAN

TRANSMITTAL LETTER FOR
CONTINUATION PATENT APPLICATION

Sir:

Transmitted herewith for filing are the [X] specification; [X] claims; [X] abstract; [X] declaration; [X] a verified statement claiming small entity status; [X] an information disclosure statement; for the above-identified patent application.

Also transmitted herewith are:

[X] 13 sheets of:

[X] Formal drawings.

[ ] Informal drawings. Formal drawings will be filed during the pendency of this application.

[ ] An assignment of the invention to:

[ ] A check in the amount of $40.00 to cover the recording fee.

[ ] An associate power of attorney.

[ ] A certified copy of the priority document, _____ application, No. _____ , filed _____

The filing fee has been calculated as shown below:

FOR	NUMBER FILED	NUMBER EXTRA	RATE	FEE
BASIC FEE				$375.00
TOTAL CLAIMS	1 - 20 =	0	x $ 9 =	$ 0.00
INDEPENDENT CLAIMS	1 - 1 =	0	x $ 42 =	$ 0.00
[ ] A MULTIPLE DEPENDENT CLAIM			+ $ 140 =	$ 0.00
			TOTAL	$375.00

[X] A check in the amount of $ 370.00 in payment of the filing fee is transmitted herewith.

Michael E. Shanahan
Applicant
Customer No. 32850
P.O. Box 381
Nyack, N.Y., 10960
Tel.: (914) 261-1160

INVENTOR INFORMATION

Inventor One Given Name:: Michael E
Family Name:: Shanahan
Postal Address Line One:: P.O. Box 381
City:: Nyack
State or Province:: New York
Country:: U.S.A.
Postal or Zip Code:: 10960
Citizenship Country:: U.S.A.

CORRESPONDENCE INFORMATION

Correspondence Customer Number:: 32850
Fax One:: 646-728-2623
Electronic Mail One:: mshanahan@fishneave.com

APPLICATION INFORMATION

Title Line One:: METHODS AND APPARATUSES FOR PROGRAMMING
Title Line Two:: USER-DEFINED INFORMATION INTO ELECTRONIC
Title Line Three:: DEVICES
Total Drawing Sheets:: 13
Formal Drawings?:: Yes
Application Type:: Utility
Docket Number:: MES/002CON
Secrecy Order in Parent Appl.?:: No

CONTINUITY INFORMATION

This application is a:: CONTINUATION OF
> Application One:: 09/518846
Filing Date:: 03-03-2000

Which is a::NON PROV. OF PROVISIONAL
>> Application Two:: 60/169158
Filing Date:: 12-06-1999

Source:: PrintEFS Version 1.0.1

METHODS AND APPARATUSES FOR PROGRAMMING USER-DEFINED INFORMATION INTO ELECTRONIC DEVICES

This application is a continuation of United States Patent Application 09/518,846 filed March 3, 2000 which claims priority from United States Provisional Application 60/169,158 filed December 6, 1999.

Background of the Invention

This application relates to electronic devices, and more particularly to a programming apparatus that allows users to program user-defined information into their electronic device.

There are many types of electronic devices available to consumers today that have the ability to produce both audio sounds and video displays. Many of these devices provide users with the ability to select and play a particular piece of audio or video. A television viewer, for example, may tune to a TV channel and watch a particular program, or connect a VCR or DVD player to the television in order to view a specific program not currently being broadcast. Similarly, an

audio system user may tune a receiver to a particular radio station to hear a certain genre of music, or connect a CD or tape player to the system in order to hear specific pieces of music. In both cases, the audio and video is user-selectable.

Currently, however, there are many electronic products that offer an audio/video playing capability that are not fully user-programmable. Users of such devices (*e.g.*, wireless or cordless telephones, pagers, personal digital assistants (PDAs), hand-held computers and the like) have to choose from a limited selection of pre-programmed information (*e.g.*, audio clips, video clips or frames, *etc.*) placed there by the manufacturer. This severely limits the user's ability to customize the device to suit his or her particular taste. Furthermore, most pre-programmed audio tends to be rather generic and can be confusing when a device of a nearby user generates a sound similar to or the same as that of another user's device. Although a programmable memory within many such electronic devices could support user-defined audio, currently, no system exists for programming such information into an electronic device.

The same is true for user-defined video. For example, certain types of user-defined video information, such as video clips, frames, and other digital or analog images could be programmed into an electronic device (*e.g.*, PDA, wireless phone, or any portable display device) and displayed at a time of the user choosing. Although a programmable memory within such a device could support user-defined video, currently, no system exists for programming such information into the device.

Summary Of The Invention

It is therefore an object of the present invention to provide an apparatus that allows a user to

program user-defined audio information into a programmable electronic device.

It is a further object of the present invention to provide an apparatus that allows a user to program user-defined video information into a programmable electronic device.

These and other objects of the present invention are accomplished by providing methods apparatuses that allow a user to program user-defined information into his or her electronic device. In one embodiment of the present invention, the programming apparatus includes processing circuitry and first and second communications links. In operation, a user selects a piece of information from a source such as a computer disk drive, the Internet, or a remote database using the first communications link. The programming apparatus may download this information and compare its format with that required by the programmable device to determine format compatibility. If the two formats are compatible, the programming apparatus may download the selected information into the programmable device. If the formats are not compatible, the programming apparatus may convert the downloaded file to a format compatible with that required by the programmable electronic device. The programming apparatus may also provide the user with an opportunity to edit the converted file. Once editing is complete, the resulting file may then be programmed into the programmable device for subsequent use.

In another aspect of the invention, a user may send customized information such as an audio or video file called a "signature" when placing a telephone call. This feature allows a user to select and send a signature file to the person receiving the telephone call such that the person receiving the call is alerted by that file.

Brief Description Of The Drawings

The above and other objects and advantages of the present invention will be apparent upon consideration of the following detailed description, taken in conjunction with the accompanying drawings, in which like reference characters refer to like parts throughout, and in which:

FIG. 1 is a generalized block diagram of a system for programming user-defined information into an electronic device in accordance with one embodiment of the present invention.

FIG. 2 is a schematic diagram of a programmer constructed in accordance with one possible embodiment of the present invention.

FIG. 3 shows a computer based implementation of a programmer constructed in accordance with one embodiment of the present invention.

FIG. 4a shows an alternate embodiment of a computer based implementation of a programmer constructed in accordance with the principles of the present invention.

FIG. 4b shows an alternate network embodiment of the computer based implementation in shown in FIG. 4a.

FIG. 5 illustrates an imbedded implementation of the programmer shown in FIG. 2.

FIG. 6 shows yet another embodiment of a computer based implementation the programmer in shown in FIG. 4b.

FIG. 7 is a schematic diagram of one possible embodiment of a wireless telephone that can receive and play user-defined audio in accordance with one aspect of the present invention.

FIGS. 8-9 show a flow chart illustrating some of the steps involved in programming user-defined

information into an electronic device in accordance with one embodiment of the present invention.

FIGS. 10-12 show a flow chart illustrating some of the steps involved in sending and receiving signature information in accordance with one embodiment of the present invention.

Detailed Description of the Invention

FIG. 1 shows a block diagram of a system 10 for programming user-defined information (*e.g.*, audio, video, or Internet access information, *etc.*) into an electronic device in accordance with one embodiment of the present invention. As shown in FIG. 1, system 10 generally includes a programmable electronic device 20, a device programmer 30, and a source 50. Programmer 30 is connected to source 50 via link 31, and to device 20 via link 32.

Programmable device 20 may be any portable electronic device (*e.g.*, a wireless telephone, a pager, a handheld computer, personal digital assistant (PDA), *etc.*). Device 20 may also be any device which integrates some or all of the functions of such devices into one device. For example, device 20 may be a PDA capable of making wireless telephone calls, a PDA with paging functions, a wireless telephone with some PDA or paging functions, a handheld or notebook computer with some or all of the functions of a PDA, a pager, and a telephone, *etc.*

In FIG. 1, links 31 and 32 may be, for example, communications links (*e.g.*, serial ports, parallel ports, universal serial buses (USB), RS232, GPIB, *etc.*), modems (*e.g.*, any suitable analog or digital modems, cellular modems, or cable modems), a network interface link (*e.g.*, Ethernet links, token ring links, *etc.*), wireless communications links (*e.g.*, cellular telephone links,

wireless Internet links, infrared links, *etc.*), or any other suitable hard-wired or wireless Internet or communications links.

Source 50 may be any device or combination of devices suitable for providing user-defined information to programmer 30 (*e.g.*, the Internet, an optical disc player (CD, DVD), a cassette player, a VCR, a digital camera, or any suitable storage device containing computer programs or files, *etc.*).

In operation, a user may choose certain information, such as Internet configuration information, an audio sample of a popular song, a video clip or frame, *etc.*, that is available from source 50 and transfer it to programmer 30. Programmer 30 may then process this information into a suitable format (or may simply route the information if no format conversion is required), and program it into a programmable memory within device 20 (not shown). Device 20 may then retrieve this information when a certain event occurs (*e.g.*, when receiving an incoming telephone call, browsing the Internet, or when programmed to do so by a user, *etc.*).

Programmer 30 may also coordinate or perform certain functions related to the routing and storing of information within device 20. For example, programmer 30 may communicate with (or simply search) device 20 to find available memory locations in which to store the user-defined information. Programmer 30 may also communicate with device 20 to determine which format the incoming information should be converted to so that the information is compatible with the downloading requirements of device 20. For audio files, this may include, but is not limited to, converting to or from any of the following format types: analog; MIDI; MPEG; PCM; Windows Media Audio Code (WMA); WAV; or Adaptive Transform Acoustic Coding (ATRAC), or to or from any

other suitable audio format, *etc.* For video files, this may include, but is not limited to, converting to or from any of the following format types: analog; JPEG; MPEG; GIF; AVI, or to or from any other suitable video format, *etc.* Text files may include, for example, HTML files, Wireless Markup Language (WML) files, WordPerfect™ files, Microsoft Office™ files, or any other suitable text files.

If multiple blocks of information are being programmed into device 20, programmer 30 may "tag" the different blocks so that device 20 and/or a user may distinguish among the different blocks stored therein. After the information has been provided, programmer 30 may communicate with device 20 to confirm that the information has been correctly received.

A more detailed diagram of one possible embodiment of programmer 30 is illustrated in FIG. 2. As illustrated, programmer 30 may include a transducer 25, a processor 34, a programmable memory 36, an analog-to-digital (A/D) converter 38, signal processing circuitry (SPC) 40, an output buffer 42, and an input buffer 44. Generally speaking, processor 40 controls the operation of programmer 30. Programmer 30 may be configured to receive and process both analog and digital signals. It may also acquire acoustic signals via transducer 25 (if installed).

In operation, programmer 30 may download certain user-selected information from source 50 via link 31. This information, such as audio or video files, in the form of electronic signals, may be received from link 31 and directed to input buffer 44. As mentioned above, these signals may need to be processed in order to be compatible with the format required by programmable device 20. For example, if analog input signals are received at input buffer 44 and device 20 requires a

digital format, the analog signals may be routed to A/D converter 38 for conversion into a suitable digital form (*e.g.*, into PCM, PAM, *etc.*). Further processing into another digital format (*e.g.*, MP3, ATRAC, WMA, *etc.*) may be accomplished by routing the converted signals to SPC 40 or processor 34 (discussed in more detail below). On the other hand, if digital input signals are received at input buffer 44 and device 20 requires analog signals, the digital signals may be routed to SPC 40 or to a dedicated digital-to-analog (D/A) converter (not shown) for conversion to the analog domain.

Processor 34 may route incoming signals from source 50 to memory 36, SPC 40, or directly to output buffer 42 depending on the circumstances. For example, some or all of the input signals received from source 50 may require further processing to meet the downloading specifications of device 20. In this case, the incoming signals that require processing may be routed to SPC 40 for such processing. For example, incoming MP3 or WMA signals may be routed to SPC 40 and converted to ATRAC format (or vice-versa). Once this conversion is complete, the resulting information may be stored in memory 36, or routed to output buffer 42 for programming in device 20. Input signals that do not require a format change may be routed directly from input buffer 44 to memory 36, or output buffer 42. Although not shown in FIG. 2, programmer 30 preferably has a display screen and a data input device, such as a keyboard associated with it so that a user may, among other things, browse and select files, monitor file transfers, and ensure that device 20 has properly received the selected files.

In one embodiment of the present invention, SPC 40 may be programmable so that the conversion and processing protocols contained therein may be periodically updated.

Furthermore, in some embodiments, processor 34 may be programmed via software routines in programmable memory 36 to perform some or all of the functions of SPC 40. In this case, an SPC of reduced processing capacity may be used or SPC 40 may be removed altogether from programmer 30.

Audio signals may also be acquired and processed by programmer 30. Transducer 25 may acquire an acoustic signal from a stereo or other audio source and convert it to an electrical signal. This electrical signal may then be processed in a way similar to the way the above-described analog signal was processed. That is, the electrical signal may be routed to A/D converter 38 and/or SPC 40 and then stored in memory 36 or output buffer 42, for example.

It will be understood that the generalized system shown in FIG. 1 may be implemented in many ways. For example, as shown in FIG. 3, system 100 may be implemented using a computer-based architecture. In this case, some or all of programmer 30 may be installed in or connected to a computer, such as a personal computer. For example, in FIG. 3, programmer 30 may be installed in an expansion slot and connected to an interface bus such as an ISA or PCI bus (not shown) in computer 60. In this configuration, programmer 30 may receive user-defined information via the interface bus in computer 60 and operate as described above with the interface bus acting as part of link 31. Some or all of programmer 30 may also be external to computer 60 and connected to it via a link similar to link 31 (not shown). Furthermore, in certain embodiments, some of the functions of programmer 30 may be distributed between computer 60 and programmer 30. For example, programmer 30 may be constructed such that it partially or fully relies on the processing capability of computer 60. In this type of

embodiment, programmer 30 may be constructed without processor 34 or with a processor of reduced capacity. Programmer 30 may also be constructed such that it partially or fully relies on the memory capacity of computer 60. Moreover, signal processing functions such as those performed by SPC 40 could also be fully or partially carried out by circuitry or software resident within computer 60.

As shown in FIG. 3, computer 60 may be connected to Internet 80 through link 70. Link 70 may be, for example, a modem (*e.g.*, any suitable analog or digital modem, cellular modem, or cable modem), a network interface link (*e.g.*, an Ethernet link, token ring link, *etc.*), a wireless communications link (*e.g.*, a wireless telephone link, a wireless Internet link, an infrared link, *etc.*), or any other suitable hard-wired or wireless communications link. With this configuration, a user may download information from Internet 80 (*e.g.*, using electronic distribution (ED) services) and/or from a disc drive or other devices (not shown) connected to computer 60 and program that information into device 20 (via programmer 30 and link 32).

It will be understood, of course, that computer 60, with a suitable communications link, such as link 32, may be programmed with software to function as programmer 30. In this way, a user may take advantage of the fact that many of the components of programmer 30 are resident within computer 60. For example, computer 60 may contain a processor, such as processor 34 and programmable memory circuitry such as memory 36. Computer 60 may also include signal processing circuitry such as SPC 40, or software that instructs processor 34 to perform the necessary format conversions. Computer 60 may include circuitry similar to input buffer 44 and output buffer 42. Such circuitry may include random

access memory (RAM) or cache memory in computer 60. Computer 60 also may include internal or external A/D conversion circuitry, such as A/D converter 38, and an internal or external transducer 25.

As shown in FIG. 4a, computer 60, programmed to function as programmer 30, may be connected to Internet 80 through link 70 and to device 20 through link 32. This arrangement allows a user to select information from Internet 80 or from a storage device connected to computer 30 (not shown) for programming into device 20.

Using the generalized system shown in FIG. 4a, user-defined information may be programmed into device 20 in many ways. For example, computer 60 may be part of a communications network 95, such as a telephone network, that provides Internet and/or telephone access to programmable device 20 (shown in FIG 4b). Communications network 95 may be provide hard-wired or wireless telephone or Internet access (or combination of the two). This arrangement is generally illustrated in FIG. 4b as architecture 200, in which computer 90, for the sake of clarity, represents computer 60, configured at least in part, to function as programmer 30.

With this configuration, a user of device 20 may access Internet 80 and select information for downloading into device 20. It will be understood, however, that in this implementation, at least a portion of computer 90 is configured to function as programmer 30, and that computer 90 may continue to perform other functions such as communicating with network computers 82, communicating with Internet 80, interfacing with external telephone network 84, and coordinating wireless Internet and telephone access *etc.*, in addition to performing some or all of the above-described programming functions.

In operation, computer 90 may communicate with device 20 to determine its format requirements and perform any conversions necessary to make user-selected information compatible with those requirements. This allows a user to select information, such as audio and/or video, that is available on the Internet or on a remote network computer, and program that information into device 20. This may be accomplished via communications link 33 (which may be any type of link previously described as suitable for link 32). For example, a user may wish to download video images from an Internet site to a hand-held computer, such as a PDA, or to a wireless telephone. The user may communicate with computer 90 via a wireless link 33 and select information from Internet 80 using an Internet browser installed in device 20. Such a browser may be a Wireless Application Protocol (WAP) compliant browser for supporting wireless Internet services. Computer 90 ensures format compatibility of the information, transmits the information to device 20, and may communicate with device 20 to confirm that the selected information has been properly received. Device 20 may provide a visual, audio, or tactile output to indicate the requested information has been successfully received.

Computer 90 may also coordinate information downloading with respect to the memory capacity of device 20. For example, if the user-selected information exceeds the available memory of device 20, computer 90 may inform the user, via link 33, that the selected information is larger than the available memory. In such an event, the user may be prompted to cancel or modify the information request. In certain instances, however, the user may instruct computer 90 to provide the information in a "scrolling" fashion (*i.e.*, provide it in portions) so that all the requested information may be

reviewed, albeit in sections. This may be particularly desirable in instances where large files, such as video files, are requested.

In some embodiments of the present invention, computer 90 may simply contact a remote computer or Internet site to fulfill requests for audio or video information in a particular format. Such web sites or remote computers may act as virtual "jukeboxes" of video and audio information, containing extensive lists of such information in a variety of formats available for downloading. Using this approach, a user may select a particular piece of information in a certain format from a list displayed on a screen of programmable device 20. Computer 90 may receive this as a request via link 33 and handle the information transfer to device 20. In some embodiments, format selection may be transparent to the user. That is, the user may simply request a piece of information and computer 90 may determine and then request information in a format appropriate for the requesting device.

In another embodiment, a remote computer or Internet site may perform a format conversion of information requested by computer 90 or device 20. For example, a user may access an Internet site or remote computer using communications network 95 and enter a title or description of the desired audio or video information along with format requirements. The remote computer or Internet site may then search the Internet or other databases to find a file that matches the user's description. Once this file is found, the Internet site or remote computer may convert that file to the requested format, (using a system similar to the described above) and provide it to device 20 via computer 90 and/or link 33. It will be understood, of course, that

embodiments such as these are within the scope of the present invention.

If desired, a user may also employ the systems shown in FIGS. 4a and 4b to download remotely stored information such as Internet access information to device 20. For example, a user may have customized bookmarks or web page addresses stored in a remote personal computer or on Internet 80. The user may employ wireless link 32 or 33 to contact that remote computer or Internet site and then download the Internet access information for use in device 20. This feature is desirable because it relieves the user of the burden of having to type in complicated Internet access information from the small keyboard of a wireless telephone or hand-held computer. It also spares the user from having to re-enter customized Internet information that is already present in another location, into their electronic device. Moreover, such a feature is convenient when a user wishes to access information on a remote computer that is not currently available in device 20. For example, a user may wish to view spreadsheet information stored on a remote computer with device 20. Rather than having to download this information form a hard-wired access point, a user may simply employ wireless link 33 (*e.g.*, a wireless modem or Internet connection) to access that remote computer or Internet site and download that information to device 20.

Another feature which may be implemented using the embodiments shown in FIGS. 4a and 4b is a "signature" feature. This allows device 20 to send user-defined information, which may be indicative of the user's personal taste or identity, along with other information when performing certain functions. For example, if a user is placing a wireless telephone call or paging someone with device 20, he or she may select the

signature feature in order to send user-defined audio or video along with, or prior to, that call. A user may accomplish this by browsing through a menu on device 20 that displays available signature options, and by choosing a particular file (not shown). If the user chooses an audio file, for example, device 20 may send that selected audio file when a call or page is placed (or a period of time before the call or page is placed). This audio file may temporarily replace the "ring sequence" of the device receiving the incoming call so that the person receiving the incoming call will be alerted by hearing the audio file sent by the caller. The person receiving the call may be able to discern the identity of the caller or other information from the audio file. After the call is complete, the ring sequence of the receiving device may be returned to its former configuration (either by computer 60 or by the receiving device).

In another embodiment, a user may program certain audio or video files into device 20 that are activated when a certain person calls. For example, a user may program device 20 so that certain signature files are played in response to receiving a characteristic indicative of the caller, such as the caller's telephone number. In this way, a user will be able to identify the caller by the sound and/or display generated by device 20. Users may also program signatures in device 20 to be played at predetermined times. For example, a user (or caller) may program "Happy Birthday" or "Jingle Bells" into device 20 to play on a certain day, or may program device 20 to play a certain signature file at specified time (*e.g.*, as an alarm).

In yet another embodiment, a user, when placing a call, may invoke a menu on device 20, which displays a list of signature files available for the person being

called. This list may be defined by the person receiving the call. For example, the person receiving the call may create a signature file list by selecting certain audio and/or video files and placing them in a database of a remote computer such as computer 90 by using, for example, a personal computer connected to the Internet. In some embodiments, signature files may also be stored in a device 20 of the person receiving the call. In this implementation, a list of signature file names may be stored in computer 90 so that a caller may browse the names of signature files stored in the device of the person receiving the call. Signature files may also be stored in a combination of both computer 90 and device 20.

In some embodiments, the signature information may not necessarily be user-defined. For example, a list of pre-selected signature files may stored on computer 90 or a remote computer from which a user of device 20 may choose. Such a list may be created by a wireless service provider, an Internet provider, an Internet site, or a manufacturer of the wireless telephone.

With these implementations, the caller may simply select a signature file from the displayed list. The selected file is then sent along with the call by computer 90 (if the selected signature file is stored in computer 90) or associated with the incoming call at device 20 (if the selected signature file is stored in device 20). In some embodiments, the caller may be able to preview signatures before sending them. For example, computer 90 may send the selected signature file to the caller for his or her review.

In systems that have a video capability, a video file containing a video clip or frame may be sent instead of or in addition to the audio sample. This may be accomplished by selecting a video option from a signature

menu and choosing a video file. In this case, the person receiving the call is alerted by seeing or hearing the video clip and/or associated audio. It will be appreciated that a video clip may have its own audio portion associated with it so that the video clip (or frame) by itself would be sufficient to alert the person receiving the incoming call.

The above-described signature feature may be implemented in many ways. In some embodiments, for example, the audio or video signatures may be stored in (the caller's) device 20 and sent along with the outgoing call or page via link 33 and computer 90. In other embodiments, however, the signature information may be stored in computer 90 and associated with the outgoing call when it is processed by computer 90. This type of embodiment may be implemented when it is desired to conserve memory space within device 20. In still other embodiments, signature information may be stored in both device 20 and computer 90. In any case, computer 90 may determine the format requirements of the device receiving the incoming call or page and convert the accompanying signature information into a suitable format.

Another implementation of a system in accordance with this invention may use an architecture 300, which is shown in FIG. 5. Using this arrangement, programmer 30 (or similar circuitry) may be embedded within programmable device 20. User-defined information may be provided to device 20 from source 50 via link 32. Such information may be routed to programmer 30, which may perform some or all of the above-described functions.

If source 50 is an acoustic source, however, link 32 may not be needed. For example, if a user desires to program an acoustic sound into device 20, the user may place a transducer 25, (*e.g.*, a speaker/ microphone existing within or external to device 20) near

the acoustic signal source, place device 20 into an "acquisition mode," and record an audio sample. In this case, transducer 25 coverts the acoustic signal into an electrical signal, which is provided to programmer 30 for processing and possibly storage within device 20. A visual, audio, or tactile output may be provided by device 20 to indicate a sample has been successfully loaded. A user may employ transducer 25 to acquire and record, for example, a verbal message or sound effect (*e.g.*, laughter, crying, sneezing, *etc.*) for use as a signature file.

Other embodiments of the present invention may use the embedded architecture of system 400 as shown in FIG. 6. Using this arrangement, user-defined information may be requested by device 20 via link 32 and computer 60. With this approach, a user may select information from Internet 80 or a remote computer and perform any necessary format conversion within device 20.

In addition to selecting user-defined information with programmer 30, a user may customize that information by performing various editing procedures. For example, a user may find an audio track or video clip that suits his or her taste. It may be desired, however, to utilize only a portion of that track or clip. In this case, a user may edit or "sample" a portion of the information to obtain the desired segment. For example, a user may wish to sample a few bars of a popular song and send it along as signature information when making a wireless telephone call. Such editing may be accomplished, for example, by using an application program with programmer 30 or by using known software with computer 60. Furthermore, once the user has edited a particular piece of information, he or she may be given the option to review the piece to ensure it is acceptable. When a user is satisfied with an edited segment, he or she may save it and be given an

opportunity to "name" that segment, so that it may be readily identified later by a user of device 20.

It will be appreciated that various other types of editing procedures are also possible. For example, a user may combine and/or further edit the content of segments of information. This may be accomplished using "cut and paste" routines in an application program. Other types of revisions may include modifying the color or content of a portion of video clip or frame, as well as editing the audio track that accompanies a video clip or frame. It may also include revising or combining audio segments or creating customized audio segments to accompany video clips or frames.

In some instances, a user may wish to download large portions of copyrighted audio or video. To prevent improper usage of such material, programmer 30 may include copyright protection software such as software that conforms with the Secure Digital Music Initiative (SDMI). Generally speaking, this may allow an owner of such material to "check out" a finite number of copies so that unauthorized distribution is prevented.

A schematic diagram of a portion of a wireless telephone 500 that can receive and play user-defined audio and/or video is shown in FIG. 7. As illustrated in FIG. 7, telephone 500 may include antenna 510, receiver/transmitter (R/T) circuit 520, processor 530, communications interface 532, speaker/transducer 540, alerting circuit 550, and optionally, programmer 30 (or similar circuitry).

A user may program information into telephone 500 in several ways. For example, a user may connect telephone 500 to an external programmer 30 (not shown in FIG. 7) via link 32 to program user-defined audio or video in telephone 500 as described above. Processor 530 may route this information to alerting circuit 550 for

storage and subsequent use. Afterwards, the user may configure telephone 500 to play a certain user-defined audio file stored in alerting circuit 550 when receiving an incoming call. Thus, when a call is received, processor 530 may instruct alerting circuit 550 to play the selected file through speaker 540. If a video file is chosen, processor 530 may instruct alerting circuit 550 to play the user-selected video file through a display screen on the telephone (not shown). Alerting circuit 550 may include programmable memory circuitry for storing user-defined information and driver circuitry (not shown) for driving speaker 540 and/or a display screen on telephone 500.

Telephone 500 may also receive user-defined information from communications network 95 via link 33 and antenna 510. With this implementation, user defined information, such as a signature file, may be received by antenna 510 and demodulated with R/T circuit 520. Processor 530 may then route the demodulated signals to an appropriate location. In the case of a signature file, for example, processor 530 may check the format of the incoming file to ensure it is compatible with the format required by alerting circuit 550. If the format is compatible, the incoming file may be routed to alerting 550 for storage and subsequent use or to speaker 540 for immediate playing. If the format is not compatible, the incoming file may be routed to programmer 30 for conversion. After conversion is complete, processor 530 may instruct programmer 30 to route the converted file to speaker 540 or alerting circuit 550. If a video file was sent as a signature file, processor 530 may instruct alerting circuit 550 to play the user-selected video file through a display in telephone 500 (not shown). In some embodiments,

speaker 540 may be an enhanced performance speaker (as compared to those currently installed in telephones) with a capacity for generating a full range of audio sounds. Moreover, it will be understood that circuitry similar to that shown in FIG. 7 may be installed for use in other communication devices such as PDA's, pagers, notebook computers, *etc.*

Some of the steps involved in programming user-defined information into programmable device 20 as described herein are illustrated in the flow chart of FIGS. 8-9. It will be understood that although programmer 30 is used in the following description, computer/programmer 90 may also perform some or all of these (or similar) steps.

At step 100 in FIG. 8, programmer 30 allows the user to browse information for potential programming into device 20. As mentioned above, this may include browsing audio/video information on the Internet, or on a hard, floppy, or optical disc drive of a computer. At step 102, the user may choose certain files for programming into device 20. Next, at step 104, programmer 30 may determine the format requirements of device 20 and compare the format of the selected files to that specified by device 20. This may be accomplished, for example, by electronically polling device 20. At step 105, if the formats are compatible, programmer 30 may go directly to step 108. If the formats are not compatible, at step 106, programmer 30 may convert the selected files to a format compatible with device 20. In some embodiments, the user may be prompted to confirm that the conversion should be performed. In addition, programmer 30 may also prompt the user to supply a name for the converted file. Moreover, if the selected file cannot be converted, programmer 30 may so inform the user.

Next, programmer 30 provides the user with an option of editing the contents of the resulting files at step 108. If desired, the user may first review the converted file to determine if editing is warranted. At step 109, if the user chooses not to edit the file, programmer 30 may go directly to step 112 (shown in FIG. 9). If the user decides to edit the file, he or she may do so at step 110. When finished editing, the user may be a given the option of reviewing the file at step 111 by returning to step 108 to determine whether the file is acceptable or requires further revision. Programmer 30 may alternate between steps 108-110 until the user is satisfied with the resulting file. When editing is complete, programmer 30 provides the user with the option of programming the file into device 20 at step 112. At this point, (step 113) the user may exit the program at step 114 or return to step 100 to browse more information.

It will be understood that these steps are merely illustrative, and are not meant to be comprehensive or necessarily performed in the order shown. For example, it may be desired to edit a file already stored in device 20. In this case, a user may bypass steps 100-106 and go directly to step 108. In some embodiments, selected files may be revised before converting them to format compatible with device 20. This may be desirable when the file's original format facilitates the editing process. In addition, programmer 30 may determine the format requirements of device 20 at any time before the conversion occurs. A user may also name or revise the name of a selected file at any time.

Some of the steps involved in sending signature files to programmable device 20 as described herein are illustrated in the flow chart of FIGS. 10-12.

At step 150 in FIG. 10, device 20 allows the user to browse signature files for potential transmission to device 20 of the person receiving the call (hereinafter the "receiver"). At step 150, the user may be provided with option of creating a new signature file if a suitable signature file not found on the list. At step 154 the user may select a signature file. Once a signature file is selected, computer 90, at step 156, may determine the location of the selected signature file. Such locations may include, but are not limited to, the caller's device 20, the receiver's device 20, or computer 90.

If computer 90 determines that the signature file is located in the user's device 20 (*i.e.*, the caller's device 20) computer 90 may retrieve that file from the user's device 20 at step 158. Next, computer 90 may compare the format requirements of the receiver's device 20 with the format of the retrieved file to determine if they are compatible at step 160. If the formats are compatible, computer 90 may go directly to step 164. If the formats are not compatible, computer 90 may convert the signature file to an acceptable format at step 162. At step 164, the signature file may be sent along with, or somewhat before, the outgoing call. At step 166, the receiver's device 20 may replace its ring sequence with the signature file and play the signature file. At step 167, the receiver's ring sequence may be returned to its original setting and the program may exit.

If, however, the signature file is located in computer 90 (step 156), computer 90 may retrieve that file at step 168 (FIG. 11). Next, computer 90 may compare the format requirements of the receiver's device 20 with the format of the retrieved file to determine if they are compatible at step 170. If the

formats are compatible, computer 90 may go directly to step 174. If the formats are not compatible, computer 90 may convert the signature file to an acceptable format at step 172. At step 174, the signature file may be sent along with, or somewhat before, the outgoing call. At step 176, the receiver's device 20 may replace its ring sequence with the signature file and play the signature file. At step 177 the receiver's ring sequence may return to its original setting and the program may exit.

On the other hand, if computer 90 determines at step 156 that the signature file is located in the receiver's device 20, computer 90 may transmit an indicia indicative of the selected file to the receiver's device 20 along with the outgoing call at step 178 (FIG. 12). Next, the receiver's device 20 may associate a signature file that corresponds to the indicia, replace its ring sequence with that signature file, and play that signature file at step 180. At step 182, the receiver's ring sequence may be returned to its original setting and the program may exit. It is assumed for the purposes of this illustration that signatures files stored in the receiver's device 20 are already in a suitable format. However, if this is not the case, a conversion step may be added between step 178 and step 180 (not shown).

It will be understood that these steps are merely illustrative, and are not meant to be comprehensive or necessarily performed in the order shown. For example, computer 90 may determine the format requirements of device 20 at any time before the conversion occurs.

Thus, it is seen that a device for programming user-defined information into an electronic device is provided. The programmer allows a user to program customized information, such as audio, video, or Internet access information into his or programmable device. This allows a user to, among other things, customize his or

her device to suit the user's particular taste. It will be understood that the foregoing is only illustrative of the principles of the invention, and that various modifications can be made by those skilled in the art without departing from the scope and spirit of the invention. For example, it is not necessary that programmable memory within device be a fixed programmable memory. That is, a removable memory module may be programmed externally from a given programmable device and subsequently installed in that device. Furthermore, the many aspects of the invention are suitable for use with hard-wired, cordless, or wireless communications devices. For example, user-defined audio and video and signature files may be used with hard-wired or cordless telephone systems. Accordingly, such embodiments will be recognized as within the scope of the present invention.

Persons skilled in the art will appreciate that the present invention can be practiced by other than the described embodiments, which are presented for purposes of illustration rather than of limitation, and the present invention is limited only by the claims which follow.

I Claim:

1. A system for programming an audio file into a device capable of making person to person telephone calls comprising:

an electronic means for locating the audio file, the audio file being external to the device and the electronic locating means; and

means for enabling a user of the device to program at least a portion of the audio file into the device wherein the audio file is used as an indicia of an incoming communication.

METHODS AND APPARATUS FOR PROGRAMMING USER-DEFINED INFORMATION INTO ELECTRONIC DEVICES

Abstract of the Invention

A device for programming user-defined information into an electronic device is provided. The programmer allows a user to program customized information, such as user-selected audio, video, or Internet access information into his or her programmable device. Such electronic devices include wireless telephones, pagers, and personal digital assistants. The programmer allows a user to, among other things, customize the device to suit his or her particular taste.

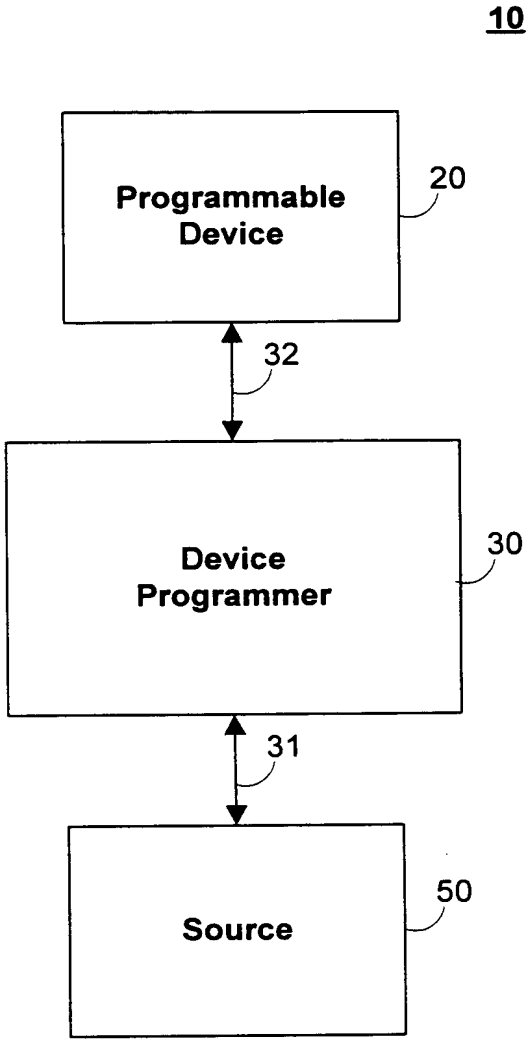
10
Programmable Device
20
32
Device Programmer
30
31
Source
50

FIG. 1

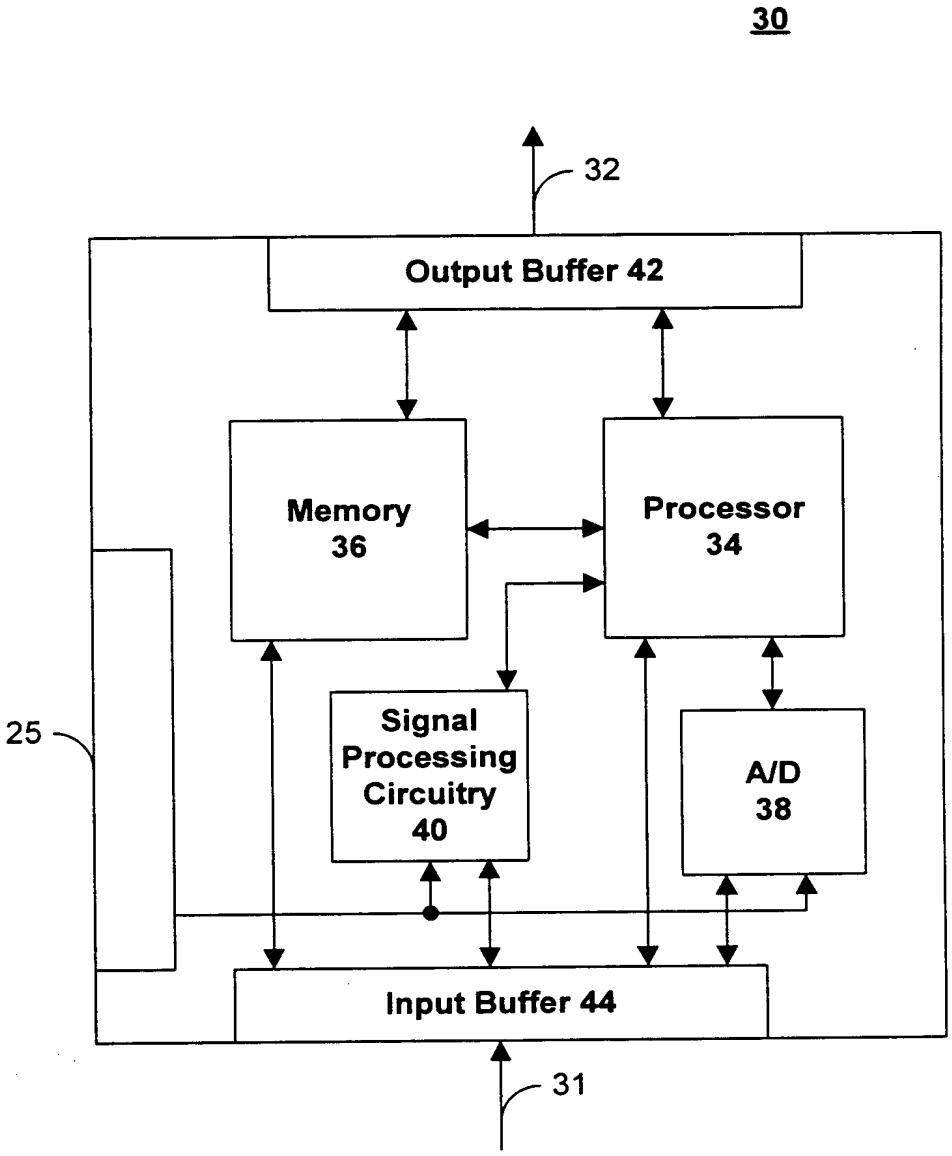
30
32
Output Buffer 42
Memory 36
Processor 34
25
Signal Processing Circuitry 40
A/D 38
Input Buffer 44
31

FIG. 2

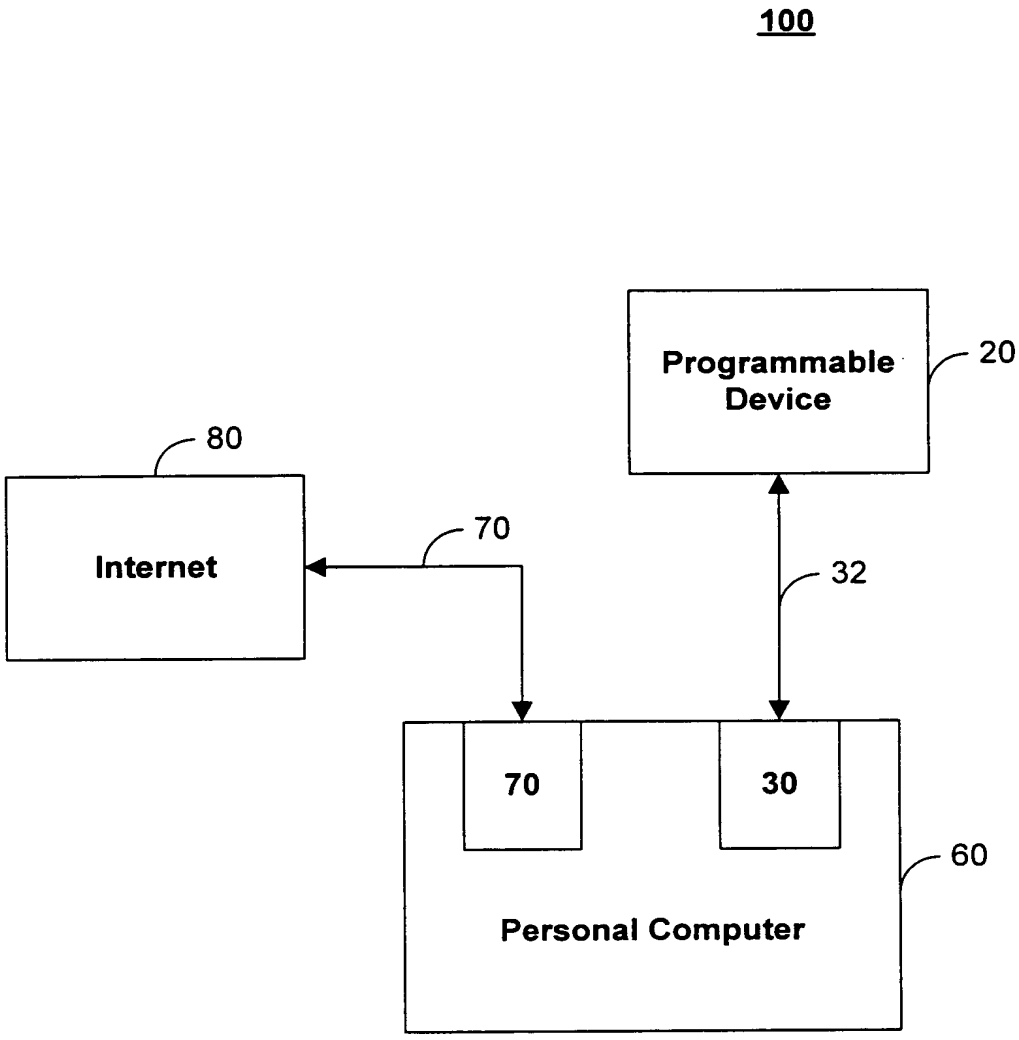
100
Programmable Device
20
80
Internet
70
32
70
30
60
Personal Computer

FIG. 3

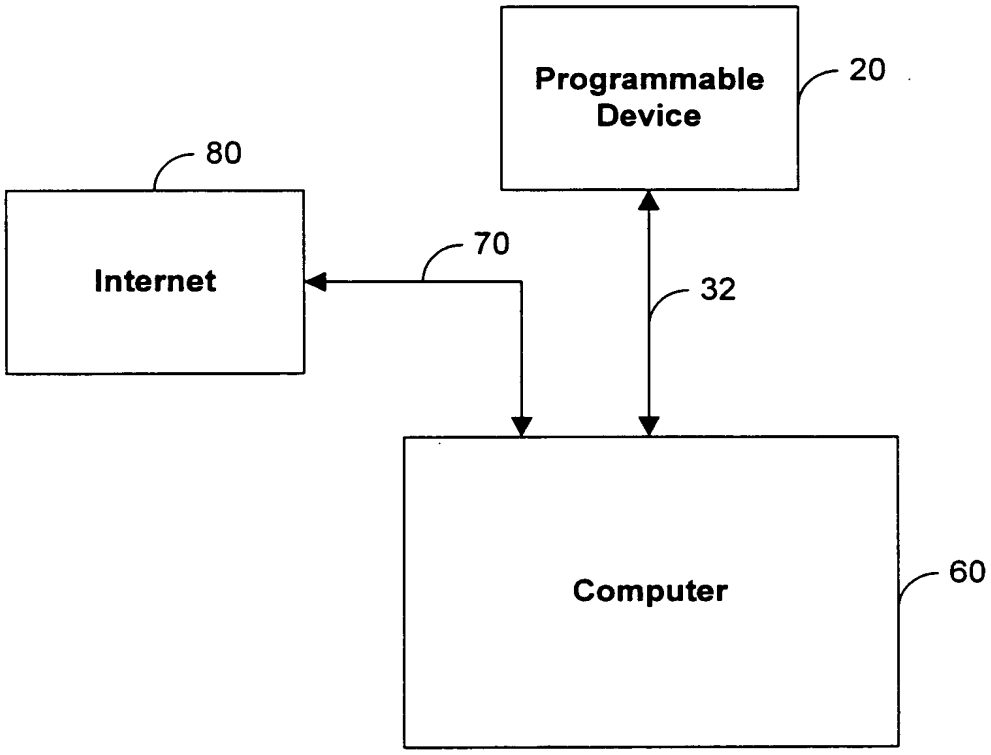

FIG. 4A

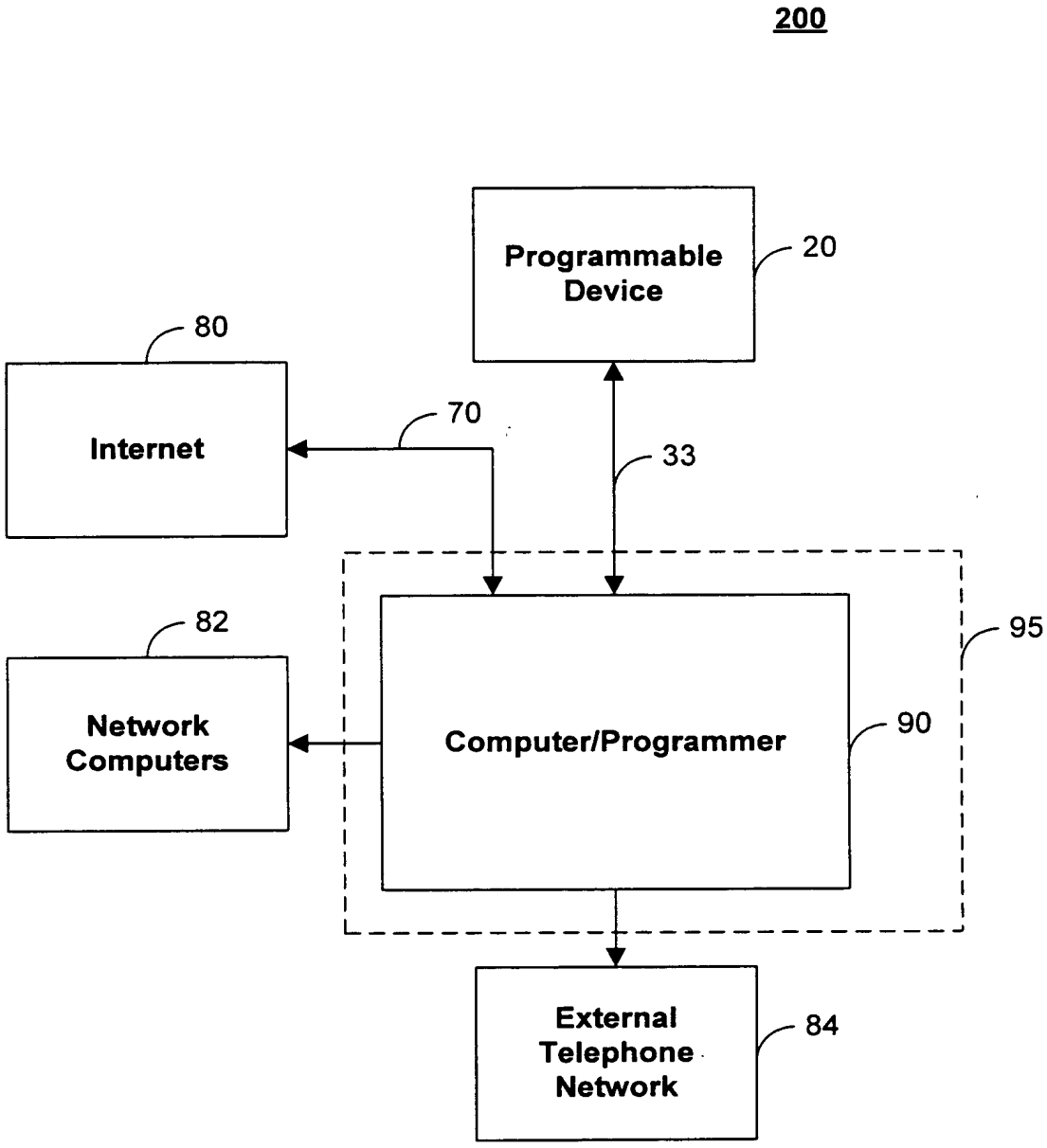
200
Programmable Device
20
80
Internet
70
33
82
Network Computers
Computer/Programmer
90
95
External Telephone Network
84

FIG. 4B

300

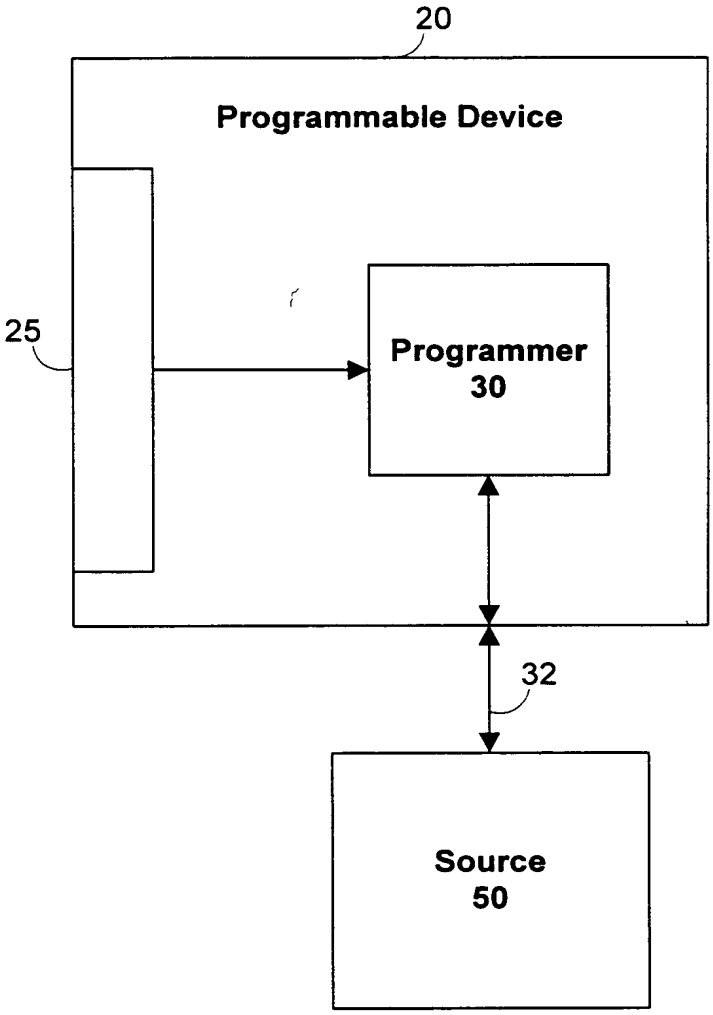

FIG. 5

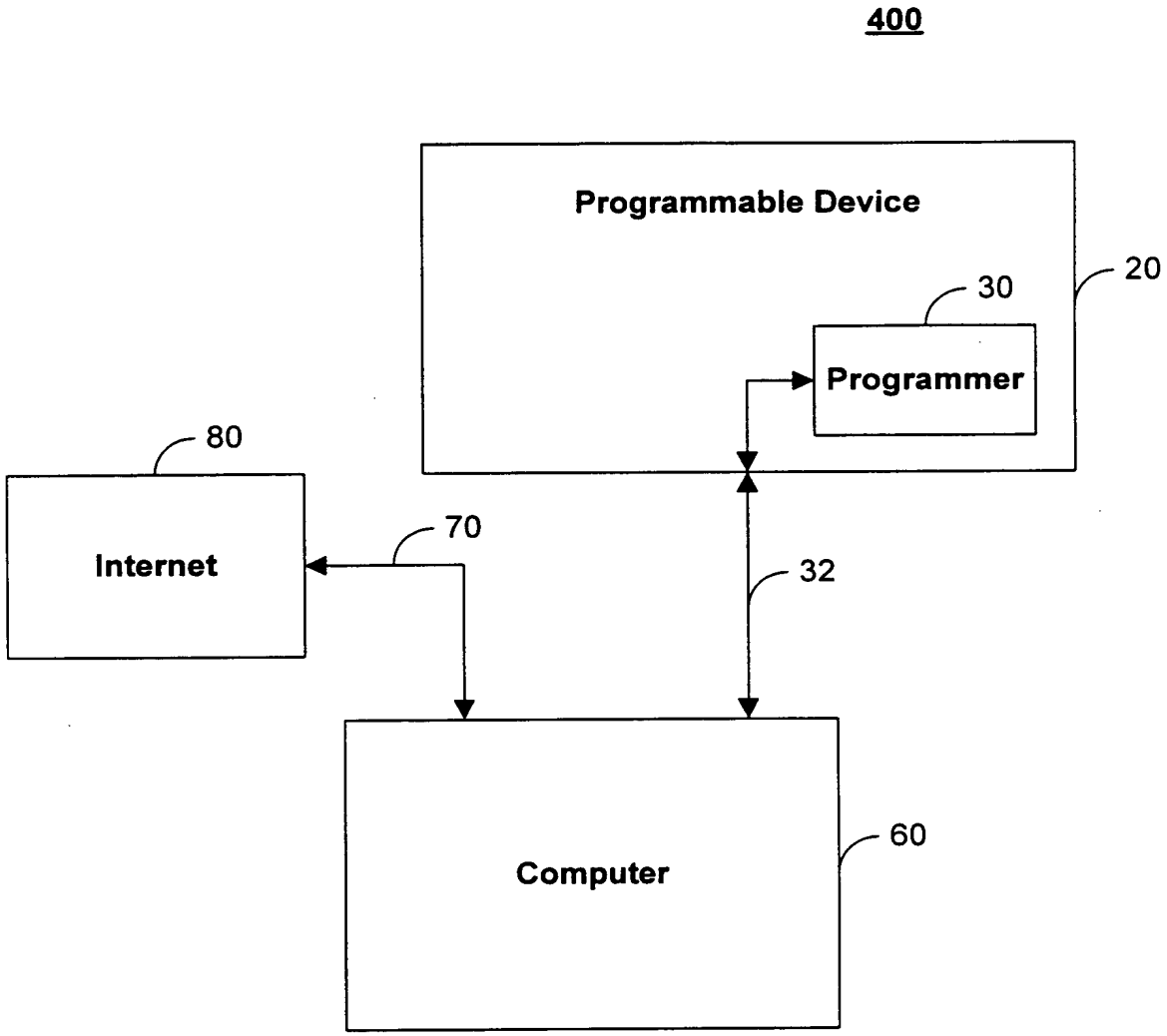
400
Programmable Device
20
30
Programmer
80
Internet
70
32
Computer
60

FIG. 6

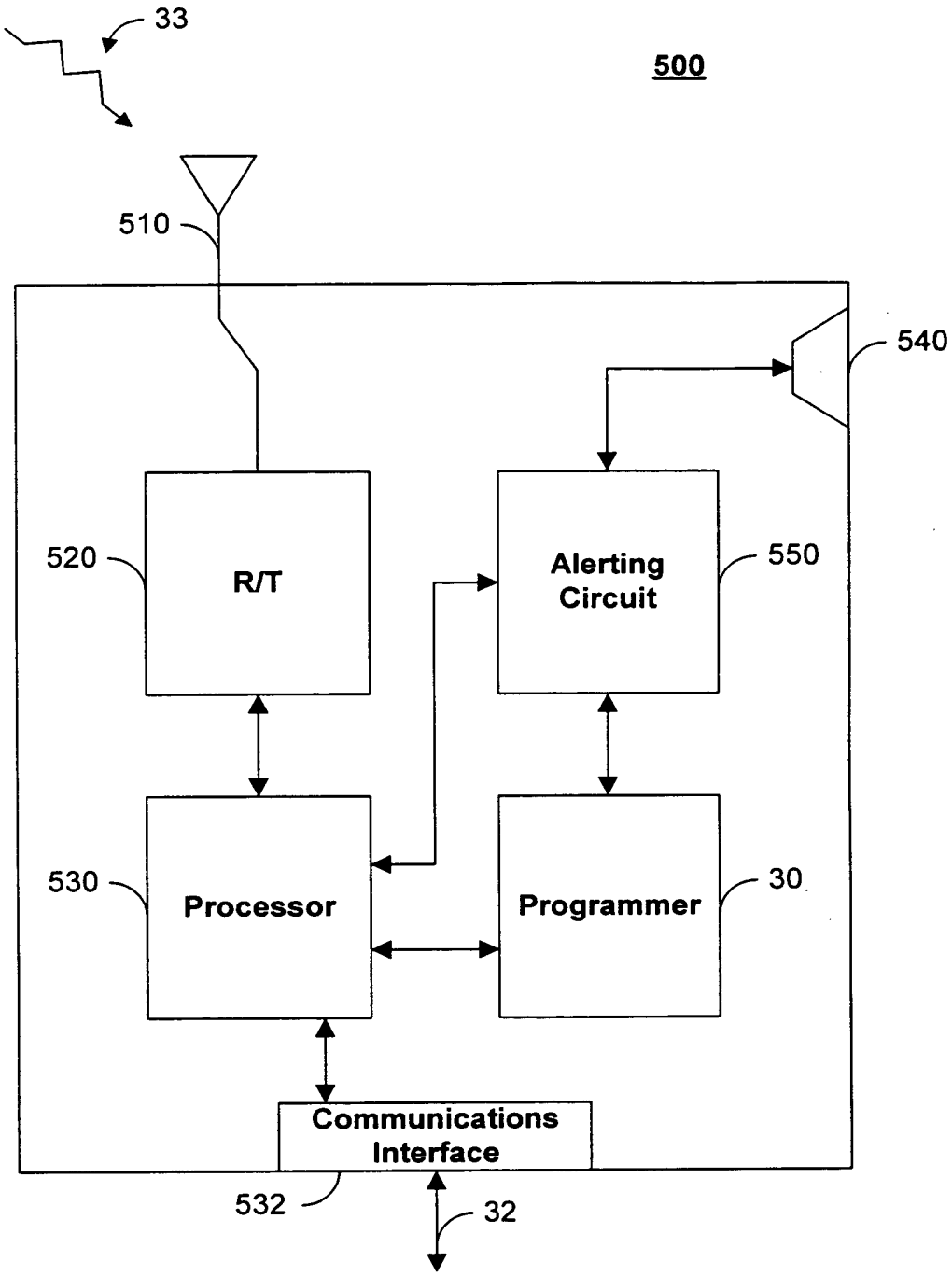
33
500
510
540
520
R/T
Alerting Circuit
550
530
Processor
Programmer
30
Communications Interface
532
32

FIG. 7

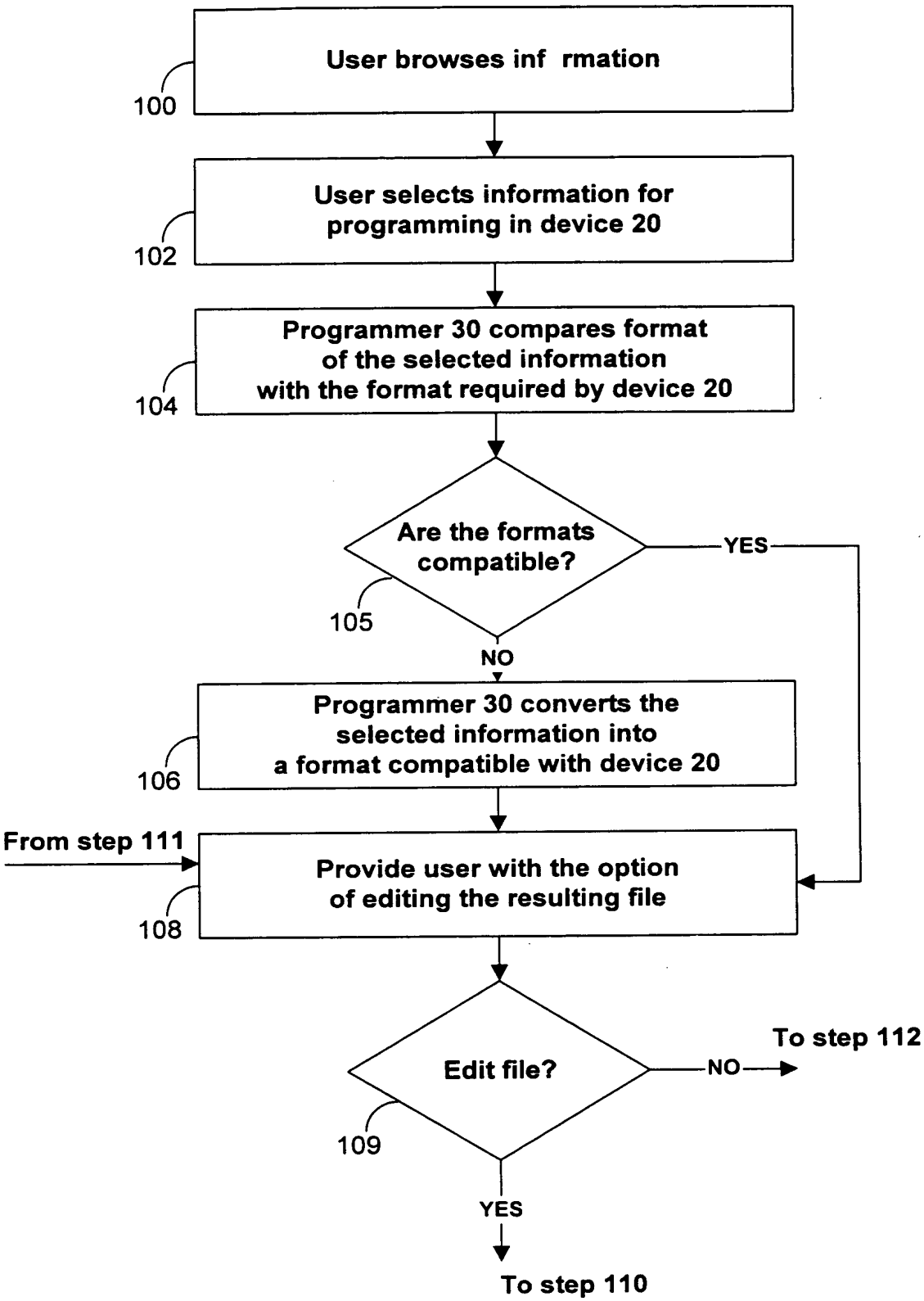
User browses inf rmation
100
User selects information for programming in device 20
102
Programmer 30 compares format of the selected information with the format required by device 20
104
Are the formats compatible?
105
YES
NO
Programmer 30 converts the selected information into a format compatible with device 20
106
From step 111
Provide user with the option of editing the resulting file
108
Edit file?
109
NO
To step 112
YES
To step 110

FIG. 8

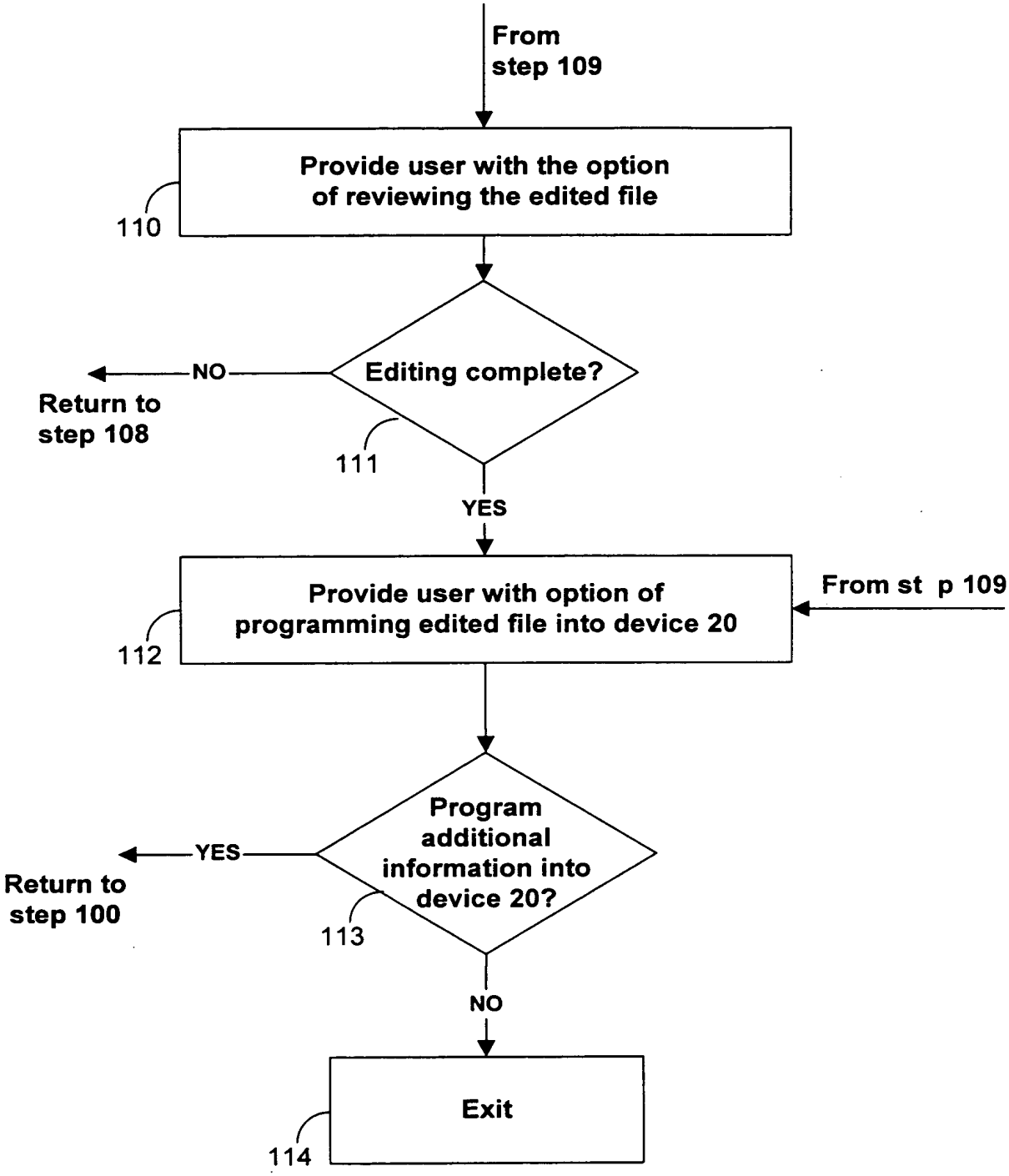
From step 109
Provide user with the option of reviewing the edited file
110
Editing complete?
NO
Return to step 108
111
YES
Provide user with option of programming edited file into device 20
From st p 109
112
Program additional information into device 20?
YES
Return to step 100
113
NO
Exit
114

FIG. 9

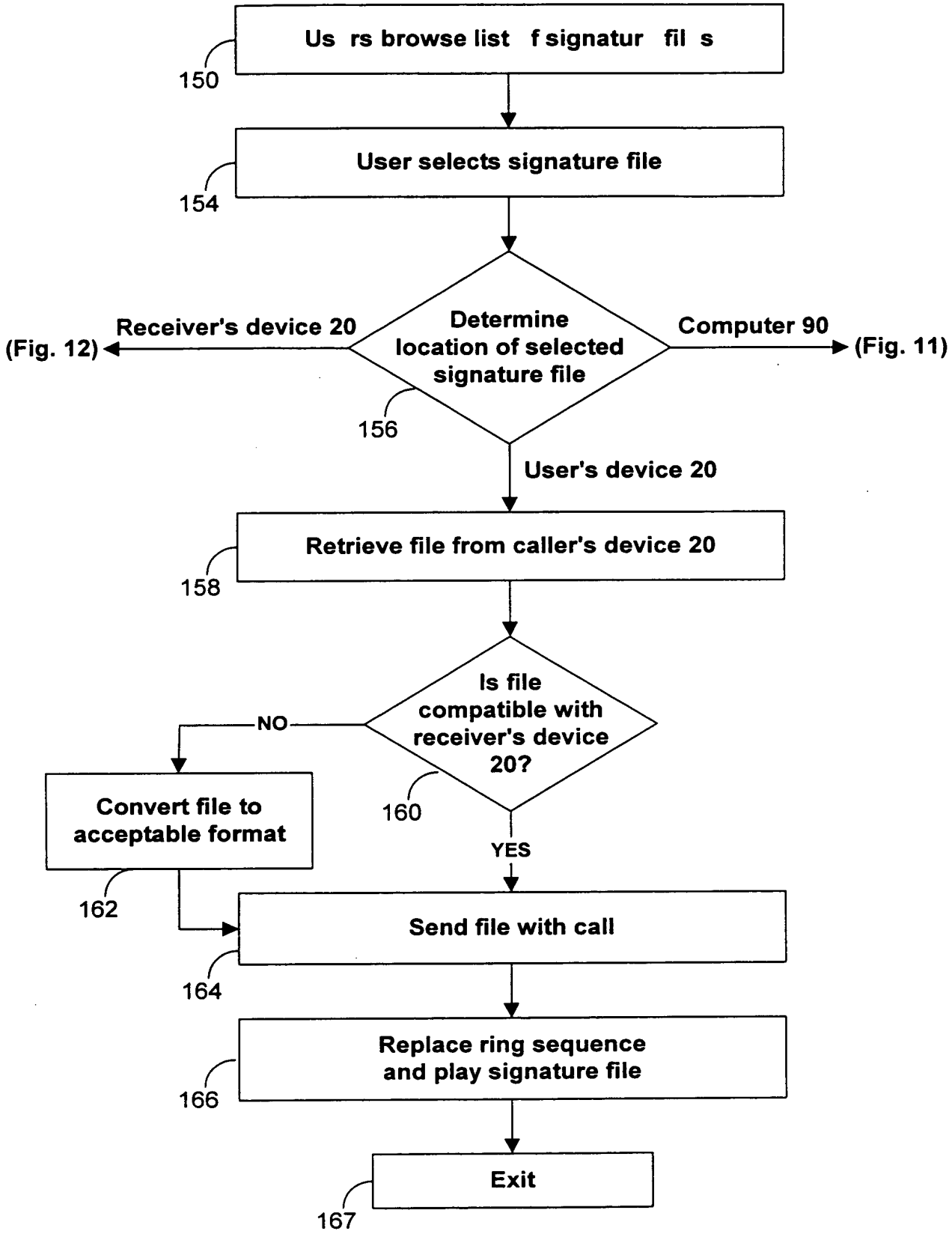
Users browse list of signature files
150
User selects signature file
154
Determine location of selected signature file
156
Receiver's device 20
(Fig. 12)
Computer 90
(Fig. 11)
User's device 20
Retrieve file from caller's device 20
158
Is file compatible with receiver's device 20?
160
NO
YES
Convert file to acceptable format
162
Send file with call
164
Replace ring sequence and play signature file
166
Exit
167

FIG. 10

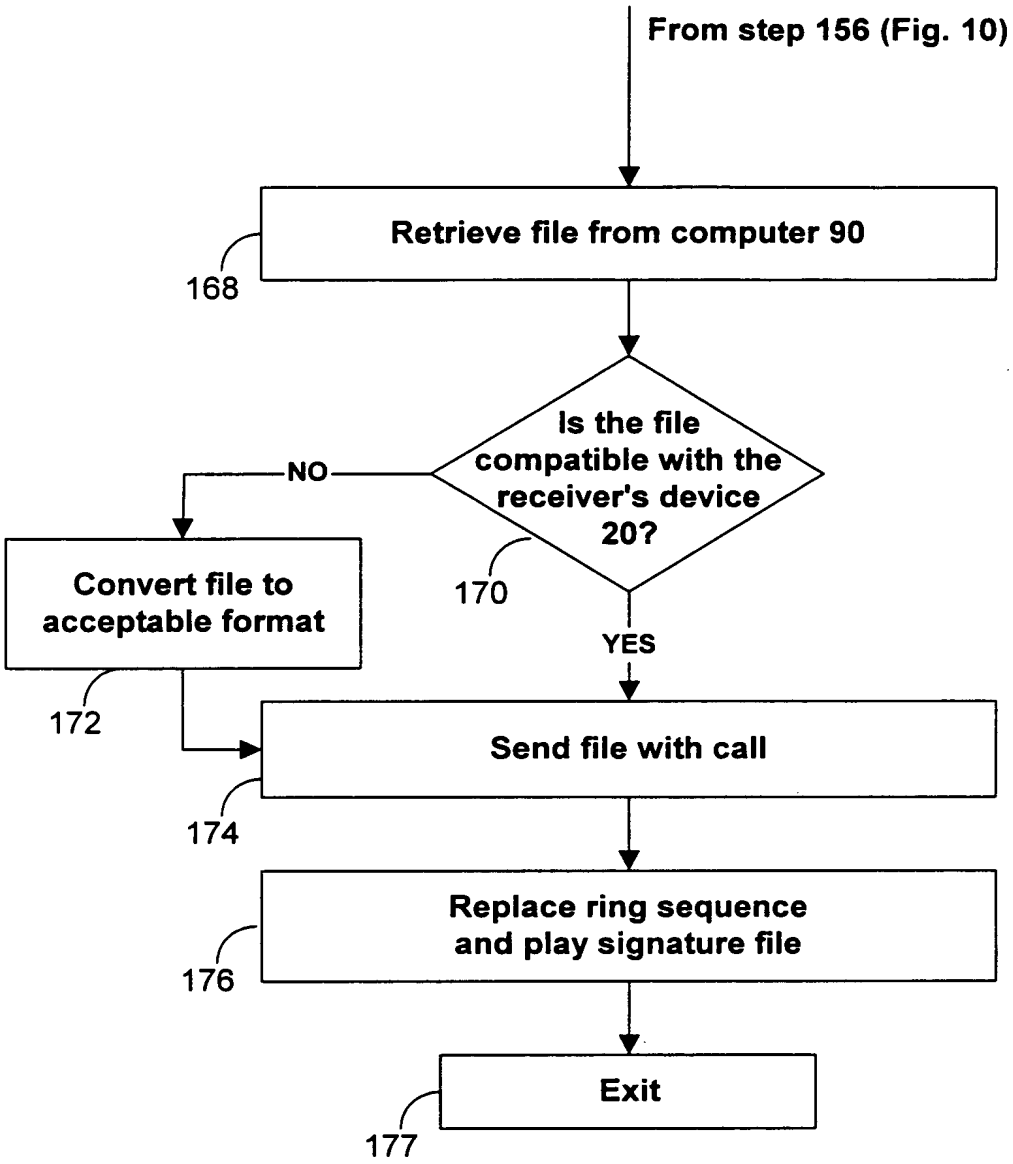
From step 156 (Fig. 10)
Retrieve file from computer 90
168
Is the file compatible with the receiver's device 20?
170
NO
YES
Convert file to acceptable format
172
Send file with call
174
Replace ring sequence and play signature file
176
Exit
177

FIG. 11

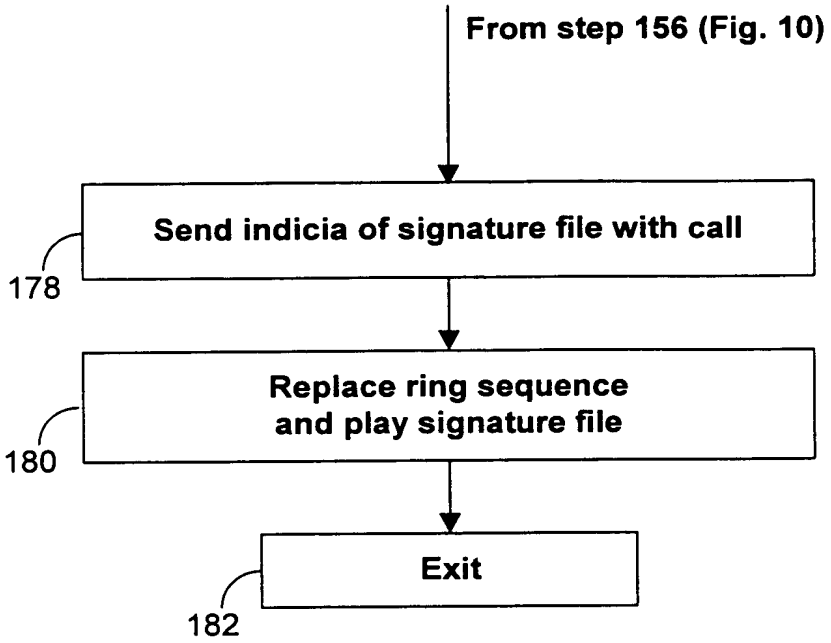
From step 156 (Fig. 10)
Send indicia of signature file with call
178
Replace ring sequence and play signature file
180
Exit
182

FIG. 12

DECLARATION AND POWER OF ATTORNEY

As a below named inventor, I hereby declare that: my residence, post office address and citizenship are as stated below next to my name;

I believe I am an original, first and sole inventor of the subject matter which is claimed and for which a patent is sought on the invention entitled:

METHODS AND APPARATUSES FOR PROGRAMMING USER-DEFINED INFORMATION INTO ELECTRONIC DEVICES

the specification of which

[X] is attached hereto

[ ] was filed on_____ as Application Serial No. _____.

I hereby state that I have reviewed and understand the contents of the above-identified specification, including the claims.

I do not know and do not believe that the invention was ever patented or described in any printed publication in any country before my or our invention thereof or more than one year prior to this application.

I do not know and do not believe that the invention was in public use or on sale in the United States of America more than one year prior to this application.

I acknowledge the duty to disclose to the United States Patent and Trademark Office all information known by me to be material to patentability as defined in Title 37, Code of Federal Regulations, § 1.56.

I hereby claim foreign priority benefits under Title 35, United States Code, § 119(a)-(d) of any foreign application(s) for patent or inventor's certificate listed below and have also identified below any foreign application for patent or inventor's certificate having a filing date before that of the application on which priority is claimed:

Prior Foreign Application(s)

			Priority Claimed	
_____	_____	_____	[ ]	[ ]
(Number)	(Country)	(Filing Date)	Yes	No

I hereby claim the benefit under Title 35, United States Code § 119(e) of any United States provisional application(s) listed below.

60/169,158	December 6, 1999
(Application Serial No.)	(Filing Date)
09/518,846	March 3, 2000
(Application Serial No.)	(Filing Date)

I hereby claim the benefit under Title 35, United States Code, § 120 of any United States application(s) listed below and, insofar as the subject matter of each of the claims of this application is not disclosed in the prior United States application in the manner provided by the first paragraph of Title 35, United States Code, § 112, I acknowledge the duty to disclose to the United States Patent and Trademark Office all information known by me to be material to patentability as defined in Title 37, Code of Federal Regulations, § 1.56 which became available between the filing date of the prior application and the national or PCT international filing date of this application:

(Application Serial No.)	(Filing Date)	(Status) (patented, pending, abandoned)

Send correspondence to: Michael E. Shanahan
P.O. Box 381
Nyack, N.Y., 10960

Direct telephone calls to: Michael E. Shanahan
(914) 261-1160

I hereby declare that all statements made herein of my own knowledge are true and that all statements made on information and belief are believed to be true; and further that these statements were made with the knowledge that willful false statements and the like so made are punishable by fine or imprisonment, or both, under Section 1001 of Title 18 of the United States Code and that such willful false statements may jeopardize the validity of the application or any patent issued thereon.

Full name of first inventor Michael E. Shanahan

First inventor's signature 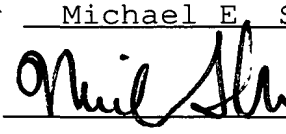 6/20/03
Date

Residence 783 Route 9W South
Nyack, New York, 10960
Citizenship United States
Post Office Address P.O. Box 381 Nyack N.Y., 10960

EXPRESS MAIL LABEL NO. -- EV132183489US

Applicant or Patentee: Michael E. Shanahan Attorney's
Serial or Patent No.: _____ Docket No.:MES/002 CON

Filed or Issued: Herewith
For: METHODS AND APPARATUSES FOR PROGRAMMING USER-DEFINED INFORMATION INTO ELECTRONIC DEVICES

VERIFIED STATEMENT (DECLARATION) CLAIMING SMALL ENTITY STATUS (37 C.F.R. 1.9(f) AND 1.27(b)) - INDEPENDENT INVENTOR

As a below named inventor, I hereby declare that I qualify as an independent inventor as defined in 37 C.F.R. 1.9 (c) for purposes of paying reduced fees under Section 41(a) and (b) of Title 35, United States Code, to the Patent and Trademark Office with regard to the invention entitled METHODS AND APPARATUSES FOR PROGRAMMING USER-DEFINED INFORMATION INTO ELECTRONIC DEVICES described in:

[X] The specification filed herewith
[ ] Application Serial No. _____, filed _____

[ ] Patent No. _____ , issued _____

I have not assigned, granted, conveyed or licensed and am under no obligation under contract or law to assign, grant, convey or license, any rights in the invention to any person who could not be classified as an independent inventor under 37 C.F.R. 1.9(c) if that person had made the invention, or to any concern which would not qualify as a small business concern under 37 C.F.R. 1.9(d) or a nonprofit organization under 37 C.F.R. 1.9(e).

Each person, concern or organization to which I have assigned, granted, conveyed, or licensed or am under an obligation under contract or law to assign, grant, convey, or license any rights in the invention is listed below:

[X] No such person, concern, or organization
[ ] Persons, concerns or organizations listed below*

*NOTE: Separate verified statements are required from each named person, concern or organization having rights to the invention averring to their status as small entities. (37 C.F.R. 1.27)

FULL NAME_____

ADDRESS _____

[ ] INDIVIDUAL [ ] SMALL BUSINESS CONCERN [ ] NONPROFIT ORGANIZATION

FULL NAME _____

ADDRESS _____

[ ] INDIVIDUAL [ ] SMALL BUSINESS CONCERN [ ] NONPROFIT ORGANIZATION

FULL NAME _____

ADDRESS _____

[ ] INDIVIDUAL [ ] SMALL BUSINESS CONCERN [ ] NONPROFIT ORGANIZATION

I acknowledge the duty to file, in this application or patent, notification of any change in status resulting in loss of entitlement to small entity status prior to paying, or at the time of paying, the earliest of the issue fee or any maintenance fee due after the date on which status as a small entity is no longer appropriate. (37 C.F.R. 1.28(b))

I hereby declare that all statements made herein of my own knowledge are true and that all statements made on information and belief are believed to be true; and further that these statements were made with the knowledge that willful false statements and the like so made are punishable by fine or imprisonment, or both, under Section 1001 of Title 18 of the United States Code, and that such willful false statements may jeopardize the validity of the application, any patent issuing thereon, or any patent to which this verified statement is directed.

NAME OF INVENTOR	NAME OF INVENTOR	NAME OF INVENTOR
Michael E. Shanahan		
Signature of Inventor	Signature of Inventor	Signature of Inventor
June 20, 2003		6/20/03
Date	Date	Date

Address of Inventor -- P.O. Box 381, Nyack, NY 10960

PATENTS
MES/002 CON

IN THE UNITED STATES PATENT AND TRADEMARK OFFICE

PATENT APPLICATION

Applicant	:	Michael E. Shanahan
Serial No.	:	not yet assigned
Filed:	:	June 20, 2003
For	:	METHODS AND APPARATUSES FOR PROGRAMMING USER-DEFINED INFORMATION INTO ELECTRONIC DEVICES
Group Art Unit	:	not yet assigned

Hon. Commissioner
for Patents
P.O. Box 1450
Alexandria, VA 22313-1450

INFORMATION DISCLOSURE STATEMENT

Sir:

Pursuant to 37 C.F.R. §§ 1.56 and 1.97, applicants hereby make the documents listed below of record in the above-identified application.

Britz	5,414,444	May 9, 1995
McMahan et. al.	5,461,666	October 24, 1995
Olsen et al.	5,479,510	December 26, 1995
MacAllister et al.	5,481,599	January 2, 1996
Brandman et al.	5,483,580	January 9, 1996
Hird et al.	5,483,581	January 9, 1996
Moss et al.	5,485,370	January 16, 1996
Zdybel, Jr. et al.	5,486,686	January 23, 1996
Shapiro et al.	5,487,671	January 30, 1996
Sasso	5,490,210	February 6, 1996
Clark et al.	5,490,251	February 6, 1996
Hunt et al.	5,499,288	March 12, 1996
Pilc et al.	5,510,777	April 23, 1996
Bogosian, Jr.	5,513,272	April 30, 1996
Wolf	5,517,605	May 14, 1996
Hallsten	5,526,620	June 18, 1996

Hollenbach et al.	5,533,115	July 2, 1996
Shockley et al.	5,534,855	July 9, 1996
Amram et al.	5,537,586	July 16, 1996
Carlson et al.	5,542,046	July 30, 1996
Smithies et al.	5,544,255	August 6, 1996
Cheng et al.	5,544,322	August 6, 1996
Pettus	5,548,726	August 20, 1996
Henderson et al.	5,550,976	August 27, 1996
Harada et al.	5,551,021	August 27, 1996
Shirai	5,572,571	November 6, 1996
Greenberg	5,598,461	January 28, 1997
Newland	5,606,597	February 25, 1997
Gordon	5,608,786	March 4, 1997
DeLuca et. al.	5,612,682	March 18, 1997
Hoffman et al	5,613,012	March 18, 1997
Nilssen	5,623,531	April 22, 1997
Nilssen	5,661,802	August 26, 1997
Cohrs et al.	5,687,227	November 11, 1997
Averbuch et al.	5,689,825	November 18, 1997
Bentley et al.	5,727,047	March 10, 1998
Rondeau et al.	5,796,728	August 18, 1998
Shirai	5,828,956	October 27, 1998
Kenagy et. al.	5,842,124	November 24, 1998
Wise et al.	5,884,262	March 16, 1999
Uppaluru	5,915,001	June 22, 1999
Piosenka et al.	5,926,756	July 20, 1999
Cairns	5,930,703	July 27, 1999
Henrick	5,940,752	August 17, 1999
Kim	5,940,775	August 17, 1999
Flood et al.	5,953,638	September 14, 1999
Nilssen	5,999,094	December 7, 1999
Shaffer et al.	5,999,599	December 7, 1999
Sremac	6,002,761	December 14, 1999
Valentine et al.	6,018,654	January 25, 2000
Shirai	6,018,656	January 25, 2000
Kaufman	6,035,018	March 7, 2000
Ali-Vehmas et al.	6,035,189	March 7, 2000
Anderson et al.	6,058,161	May 2, 2000
Nilssen	6,073,003	June 6, 2000
Kato et al.	6,088,730	July 11, 2000
Armanto et al.	6,094,587	July 25, 2000
Parluski et al.	6,122,526	September 19, 2000
Lee et al.	6,137,525	October 24, 2000
Anderson et al.	6,144,722	November 7, 2000
Rosen	6,167,130	December 26, 2000
Nilssen	6,167,278	December 26, 2000
Plain et al.	6,179,682	January 30, 2001
Iggulden et al.	6,256,378	July 3, 2001
Lin et al.	6,366,791	April 2, 2002

Foreign Patents

Armanto et al.	EP 0 851 649 A2	December 16, 1997
Divon et al.	WO 9928897	December 4, 1997
Kim	WO 0038340	December 22, 1998
Rydbeck et al.	WO 9943136	February 18, 1998
Hideo	JP 09205471	August 5, 1997

Because this is a continuation application, copies of these documents are not enclosed herewith. It is respectfully requested that these documents be: (1) fully considered by the Patent and Trademark Office during the examination of this application; and (2) printed on any patent which may issue on this application. Applicant requests that a copy of Form PTO-1449 (submitted in duplicate herewith), as considered and initialed by the Examiner, be returned with the next communication.

Applicant believes that no fee is due at this time. A duplicate copy of this Information Disclosure Statement is enclosed herewith.

An early and favorable action is respectfully requested.

Respectfully submitted,

Michael E. Shanahan
Applicant
Customer No.: 32850
P.O. Box 381
Nyack, N.Y., 10960

FORM PTO-1449 U.S. DEPARTMENT OF COMMERCE PATENT AND TRADEMARK OFFICE	ATTY. DOCKET NO. MES/002 CON	SERIAL NO.
INFORMATION DISCLOSURE STATEMENT BY APPLICANT	APPLICANT Michael E. Shanahan	
	FILING DATE June 10, 2003	GROUP

U.S. PATENT DOCUMENTS

EXAMINER INITIAL	DOCUMENT NUMBER	DATE	NAME	CLASS	SUBCLASS	FILING DATE IF APPROPRIATE
	5,479,510	12/26/95	Olsen et al.	380	24	
	5,481,599	01/02/96	MacAllister et al	379	101	
	5,483,580	01/09/96	Brandman et al.	379	88	
	5,483,581	01/09/96	Hird et al.	379	132	
	5,485,370	01/16/96	Moss et al.	364	408	
	5,486,686	01/23/96	Zdybel, Jr. et al.	235	375	
	5,487,671	01/30/96	Shpiro et al.	434	185	
	5,490,210	02/06/96	Sasso	379	100	
	5,490,251	02/06/96	Clark et al.	395	200.2	
	5,499,288	03/12/96	Hunt et al.	379	88	
	5,510,777	04/23/96	Pilc et al.	340	825.310	
	5,513,272	04/30/96	Bogosian, Jr.	382	116	
	5,517,605	05/14/96	Wolf	395	155	
	5,526,620	06/18/96	Hallsten	52	246	
	5,530,852	06/25/96	Meske, Jr. et al.	395	600	
	5,533,115	07/02/96	Hollenbach et al.	379	220	
	5,534,855	07/09/96	Shockley et al.	340	825.300	
	5,537,586	07/16/96	Amram et al.	395	600	
	5,542,046	07/30/96	Carlson et al.	395	186	
	5,544,255	08/06/96	Smithies et al.	382	119	
	5,544,322	08/06/96	Cheng et al.	395	200.12	
	5,548,726	08/20/96	Pettus	395	200.09	
	5,550,976	08/27/96	Henderson et al.	395	200.06	
	5,551,021	08/27/96	Harada et al.	395	600	
	5,598,461	01/28/97	Greenberg	379	67	
	5,608,786	03/04/97	Gordon	379	100	
	5,613,012	03/18/97	Hoffman et al	382	115	
	5,623,531	04/22/97	Nilssen	379	56	
	5,661,802	08/26/97	Nilssen	380	20	

EXAMINER DATE CONSIDERED

EXAMINER: Initial if citation considered, whether or not citation is in conformance with MPEP 609; Draw line through citation if not conformance and not considered. Include copy of this form with next communication to applicant.

FORM PTO-1449 U.S. DEPARTMENT OF COMMERCE PATENT AND TRADEMARK OFFICE INFORMATION DISCLOSURE STATEMENT BY APPLICANT	ATTY. DOCKET NO. MES/002 CON	SERIAL NO.
	APPLICANT Michael E. Shanahan	
	FILING DATE June 10, 2003	GROUP

	5,687,227	11/11/97	Cohrs et al.	379	374	
	5,689,825	11/18/97	Averbuch et al.	455	89	
	5,727,047	03/10/98	Bentley et al.	379	93	
	5,796,728	08/18/98	Rondeau et al.	370	338	
	5,828,956	10/27/98	Shirai	455	411	
	5,884,262	03/16/99	Wise et al.	704	270	
	5,915,001	06/22/99	Uppaluru	379	88.22	
	5,926,756	07/20/99	Piosenka et al.	455	418	
	5,930,703	07/27/99	Cairns	455	418	
	5,940,752	08/17/99	Henrick	455	419	
	5,953,638	09/14/99	Flood et al.	455	31.2	
	5,999,094	12/07/99	Nilssen	340	507	
	5,999,599	12/07/99	Schaffer et al.	379	93.23	
	6,002,761	12/14/99	Sremac	379	374	
	6,018,654	01/25/00	Valentine et al.	455	414	
	6,018,656	01/25/00	Shirai	455	422	
	6,035,018	03/07/00	Kaufman	379	88.17	
	6,035,189	03/07/00	Ali-Vehmas et al.	455	414	
	6,058,161	05/02/00	Anderson et al.	379	27	
	6,073,003	06/06/00	Nilsenn	455	402	
	6,088,730	07/11/00	Kato et al.	709	227	
	6,094,587	07/25/00	Armanto et al.	455	567	
	6,144,722	11/07/00	Anderson et al.	379	27	
	6,167,130	12/26/00	Rosen	379	355	
	6,167,278	12/26/00	Nilssen	455	462	
	6,179,682	01/30/01	Plain et al.	446	141	
	6,256,378	07/03/01	Iggulden et al.	379	102.3	
	6,366,791	04/02/02	Lin et al.	455	567	

OTHER DOCUMENTS (Including Author, Title, Date, Pertinent Pages, Etc.)

EXAMINER INITIAL	
	PCT Written Opinion

EXAMINER DATE CONSIDERED

EXAMINER: Initial if citation considered, whether or not citation is in conformance with MPEP 609; Draw line through citation if not conformance and not considered. Include copy of this form with next communication to applicant.

FORM PTO-1449 U.S. DEPARTMENT OF COMMERCE PATENT AND TRADEMARK OFFICE INFORMATION DISCLOSURE STATEMENT BY APPLICANT	ATTY. DOCKET NO. MES/002 CON	SERIAL NO.
	APPLICANT Michael E. Shanahan	
	FILING DATE June 10, 2003	GROUP

U.S. PATENT DOCUMENTS

EXAMINER INITIAL	DOCUMENT NUMBER	DATE	NAME	CLASS	SUBCLASS	FILING DATE IF APPROPRIATE
	5,479,510	12/26/95	Olsen et al.	380	24	
	5,481,599	01/02/96	MacAllister et al	379	101	
	5,483,580	01/09/96	Brandman et al.	379	88	
	5,483,581	01/09/96	Hird et al.	379	132	
	5,485,370	01/16/96	Moss et al.	364	408	
	5,486,686	01/23/96	Zdybel, Jr. et al.	235	375	
	5,487,671	01/30/96	Shpiro et al.	434	185	
	5,490,210	02/06/96	Sasso	379	100	
	5,490,251	02/06/96	Clark et al.	395	200.2	
	5,499,288	03/12/96	Hunt et al.	379	88	
	5,510,777	04/23/96	Pilc et al.	340	825.310	
	5,513,272	04/30/96	Bogosian, Jr.	382	116	
	5,517,605	05/14/96	Wolf	395	155	
	5,526,620	06/18/96	Hallsten	52	246	
	5,530,852	06/25/96	Meske, Jr. et al.	395	600	
	5,533,115	07/02/96	Hollenbach et al.	379	220	
	5,534,855	07/09/96	Shockley et al.	340	825.300	
	5,537,586	07/16/96	Amram et al.	395	600	
	5,542,046	07/30/96	Carlson et al.	395	186	
	5,544,255	08/06/96	Smithies et al.	382	119	
	5,544,322	08/06/96	Cheng et al.	395	200.12	
	5,548,726	08/20/96	Pettus	395	200.09	
	5,550,976	08/27/96	Henderson et al.	395	200.06	
	5,551,021	08/27/96	Harada et al.	395	600	
	5,598,461	01/28/97	Greenberg	379	67	
	5,608,786	03/04/97	Gordon	379	100	
	5,613,012	03/18/97	Hoffman et al	382	115	
	5,623,531	04/22/97	Nilssen	379	56	
	5,661,802	08/26/97	Nilssen	380	20	

EXAMINER DATE CONSIDERED

EXAMINER: Initial if citation considered, whether or not citation is in conformance with MPEP 609; Draw line through citation if not conformance and not considered. Include copy of this form with next communication to applicant.

FORM PTO-1449 U.S. DEPARTMENT OF COMMERCE PATENT AND TRADEMARK OFFICE	ATTY. DOCKET NO. MES/002 CON	SERIAL NO.
INFORMATION DISCLOSURE STATEMENT BY APPLICANT	APPLICANT Michael E. Shanahan	
	FILING DATE June 10, 2003	GROUP

	5,687,227	11/11/97	Cohrs et al.	379	374	
	5,689,825	11/18/97	Averbuch et al.	455	89	
	5,727,047	03/10/98	Bentley et al.	379	93	
	5,796,728	08/18/98	Rondeau et al.	370	338	
	5,828,956	10/27/98	Shirai	455	411	
	5,884,262	03/16/99	Wise et al.	704	270	
	5,915,001	06/22/99	Uppaluru	379	88.22	
	5,926,756	07/20/99	Piosenka et al.	455	418	
	5,930,703	07/27/99	Cairns	455	418	
	5,940,752	08/17/99	Henrick	455	419	
	5,953,638	09/14/99	Flood et al.	455	31.2	
	5,999,094	12/07/99	Nilssen	340	507	
	5,999,599	12/07/99	Schaffer et al.	379	93.23	
	6,002,761	12/14/99	Sremac	379	374	
	6,018,654	01/25/00	Valentine et al.	455	414	
	6,018,656	01/25/00	Shirai	455	422	
	6,035,018	03/07/00	Kaufman	379	88.17	
	6,035,189	03/07/00	Ali-Vehmas et al.	455	414	
	6,058,161	05/02/00	Anderson et al.	379	27	
	6,073,003	06/06/00	Nilsenn	455	402	
	6,088,730	07/11/00	Kato et al.	709	227	
	6,094,587	07/25/00	Armanto et al.	455	567	
	6,144,722	11/07/00	Anderson et al.	379	27	
	6,167,130	12/26/00	Rosen	379	355	
	6,167,278	12/26/00	Nilssen	455	462	
	6,179,682	01/30/01	Plain et al.	446	141	
	6,256,378	07/03/01	Iggulden et al.	379	102.3	
	6,366,791	04/02/02	Lin et al.	455	567	

OTHER DOCUMENTS (Including Author, Title, Date, Pertinent Pages, Etc.)

EXAMINER INITIAL	
	PCT Written Opinion

EXAMINER DATE CONSIDERED

EXAMINER: Initial if citation considered, whether or not citation is in conformance with MPEP 609; Draw line through citation if not conformance and not considered. Include copy of this form with next communication to applicant.

PATENT APPLICATION SERIAL NO. _____

U.S. DEPARTMENT OF COMMERCE
PATENT AND TRADEMARK OFFICE
FEE RECORD SHEET

06/25/2003 EHAILE1 00000021 10600975
01 FC:2001 375.00 OP

PTO-1556
(5/87)

*U.S. Government Printing Office: 2002 — 489-267/69033