REEDFAX® THE PATENT CONNECTION®

NOW THAT'S SERVICE!

United States
Patent File History

Tab Listings

- **A.** References (if applicable)
  - **A1**-U.S. References
  - **A2**-Foreign References
- **B.** Jacket (face of file, contents flap, index of claims, PTO 270, searched)
- **C.** Printed Patent
- **D.** Specification (serial no. Sheet, abstract, specification, claims)
- **E.** Oath
  - **E1**-Small Entity Status (if applicable)
- **F.** Drawing Figures (if applicable)
- **G.** USPTO / Applicant Correspondence
- **H.** Original Patent Application (in cases of FWC)

Supplied by:
REEDFAX
7 Walnut Grove Drive
Horsham PA 19044-2201
Customer Service: 1-800-422-1337 or 215-441-4768
Fax: 1-800-421-5585 or 215-441-6354
www.reedfax.com
email@reedfax.com

ISO9001:2008 KEMA CERTIFIED

The Publications are found As Is.

This page was inserted by:
REEDFAX
7 Walnut Grove Drive
Horsham PA 19044-2201
Customer Service: 1-800-422-1337 or 215-441-4768
Fax: 1-800-421-5585 or 215-441-6354
www.reedfax.com
email@reedfax.com

JC526 U.S. PTO
09/034773
03/02/98

ISSUE CLASSIFICATION	
Class	Subclass
709	202

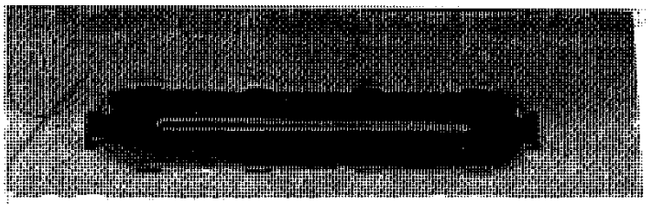

PATENT NUMBER

6108686

6108686

U.S. UTILITY PATENT APPLICATION

O.I.P.E.	PATENT DATE
SCANNED KM TG Q.A. TH	AUG 22 2000

SECTOR	CLASS	SUBCLASS	ART UNIT	EXAMINER
	709 ~~395~~	202 ~~200.32~~	216	Geckil

FILED WITH: ☐ DISK (CRF) ☐ FICHE
(Attached in pocket on right inside flap)

PREPARED AND APPROVED FOR ISSUE

ISSUING CLASSIFICATION

ORIGINAL		CROSS REFERENCE(S)						
CLASS	SUBCLASS	CLASS	SUBCLASS (ONE SUBCLASS PER BLOCK)					
709	202	709	203	217				
INTERNATIONAL CLASSIFICATION								
G06F 15/16								
/								
/								
/								
/								

☐ Continued on Issue Slip Inside File Jacket

☐ TERMINAL DISCLAIMER	DRAWINGS			CLAIMS ALLOWED	
	Sheets Drwg.	Figs. Drwg.	Print Fig.	Total Claims	Print Claim for O.G.
	6	6	4	33	32

☐ a) The term of this patent subsequent to _____ (date) has been disclaimed.

(Assistant Examiner) (Date)

NOTICE OF ALLOWANCE MAILED

4-24-00

☐ b) The term of this patent shall not extend beyond the expiration date of U.S Patent. No. _____.

MEHMET B. GECKIL
PRIMARY EXAMINER

Mehmet Geckil 4/17/00
(Primary Examiner) (Date)

ISSUE FEE

# Amount Due	Date Paid
1,210.00	5/19/00

☐ c) The terminal ____months of this patent have been disclaimed.

Susan Bond 4/20/00
(Legal Instruments Examiner) (Date)

ISSUE BATCH NUMBER

152

WARNING:
The information disclosed herein may be restricted. Unauthorized disclosure may be prohibited by the United States Code Title 35, Sections 122, 181 and 368. Possession outside the U.S. Patent & Trademark Office is restricted to authorized employees and contractors only.

ISSUE IN FILE

Form PTO-436A
(Rev. 10/97)

(LABEL AREA)

Formal Drawings(___shts)set___

(FACE)

JC526 U.S. PTO
09/034773
03/02/98

PATENT APPLICATION

09034773

MAR 17 98 26

INITIALS _____

CONTENTS

	Date received (Incl. C. of M.) or Date Mailed		Date received (Incl. C. of M.) or Date Mailed
1. Application 6 Print papers.		42.	
2. LTR TE DEC SIG	6-8-98	43.	
3. Del, Sumch	6-19-98	44.	
4. IDS	3-23-98	45.	
5. IDS	3-2-98	46.	
6. non fin rejn (3)	12-28-99	47.	
7. Amdt A	3-13-00	48.	
8. Notice of Allowance Due	4-24-00	49.	
9. drawings(6 shts)set 1	5-19-00	50.	
10.		51.	
11.		52.	
12.		53.	
13.		54.	
14.		55.	
15.		56.	
16.		57.	
17.		58.	
18.		59.	
19.		60.	
20.		61.	
21.		62.	
22.		63.	
23.		64.	
24.		65.	
25.		66.	
26.		67.	
27.		68.	
28.		69.	
29.		70.	
30.		71.	
31.		72.	
32.		73.	
33.		74.	
34.		75.	
35.		76.	
36.		77.	
37.		78.	
38.		79.	
39.		80.	
40.		81.	
41.		82.	

(FRONT)

(7)

ISSUE SLIP STAPLE AREA (for additional cross references)

POSITION	INITIALS	ID NO.	DATE
CO1	mab	875	7-10-98
FEE DETERMINATION			
O.I.P.E. CLASSIFIER		8	3-17-98
FORMALITY REVIEW	dpa	17375	5/13/98

INDEX OF CLAIMS

✔ ..... Rejected
= ..... Allowed
— (Through numeral) Canceled
÷ ..... Restricted
N ..... Non-elected
I ..... Interference
A ..... Appeal
O ..... Objected

Claim Final	Claim Original	Date
1	(1)	12/23/99 4/21/00
2	2	
3	3	
4	4	
5	(5)	
6	6	
7	7	
8	8	
9	9	
10	10	
11	11	
12	12	
13	(13)	
14	14	
15	15	
16	16	
17	17	
18	18	
19	19	
20	(20)	
21	21	
22	22	
23	23	
24	24	
25	25	
26	26	
27	27	
28	28	
29	(29)	
30	30	
31	31	
32	(32)	
33	(33)	
	34	
	35	
	36	
	37	
	38	
	39	
	40	
	41	
	42	
	43	
	44	
	45	
	46	
	47	
	48	
	49	
	50	

Claim Final	Claim Original	Date
	51	
	52	
	53	
	54	
	55	
	56	
	57	
	58	
	59	
	60	
	61	
	62	
	63	
	64	
	65	
	66	
	67	
	68	
	69	
	70	
	71	
	72	
	73	
	74	
	75	
	76	
	77	
	78	
	79	
	70	
	81	
	82	
	83	
	84	
	85	
	86	
	87	
	88	
	89	
	90	
	91	
	92	
	93	
	94	
	95	
	96	
	97	
	98	
	99	
	100	

Claim Final	Claim Original	Date
	110	
	112	
	113	
	114	
	115	
	116	
	117	
	118	
	119	
	110	
	111	
	112	
	113	
	114	
	115	
	116	
	117	
	118	
	119	
	120	
	121	
	122	
	123	
	124	
	125	
	126	
	127	
	128	
	129	
	130	
	131	
	132	
	133	
	134	
	135	
	136	
	137	
	138	
	139	
	140	
	141	
	142	
	143	
	144	
	145	
	146	
	147	
	148	
	149	
	150	

If more than 150 claims or 10 actions staple additional sheet here

(LEFT INSIDE)

[redacted]

SEARCHED

Class	Sub.	Date	Exmr.
709	202	12/21/99	M.G.
709	203	"	"
709	217	"	"
707	1-6	"	"
707	10	"	"
707	510	"	"
707	104	"	"
709	202	4/17/00	M.G.
709	203	"	"
709	217	"	"
707	1-6	"	"
707	10	"	"
707	510	"	"
707	104	"	"

INTERFERENCE SEARCHED

Class	Sub.	Date	Exmr.
709	202	4/17/00	M.G.
709	203	"	"
709	217	"	"
707	10	"	"
707	104	"	"
707	510	"	"

SEARCH NOTES
(INCLUDING SEARCH STRATEGY)

	Date	Exmr.
West + Internet searched - Report attached.	12/21/99	M.G.
West Dictionary searched - Report attached	4/17/00	M.G.

(RIGHT OUTSIDE)

US006108686A

United States Patent [19]

Williams, Jr.

[11] Patent Number: 6,108,686

[45] Date of Patent: Aug. 22, 2000

[54] **AGENT-BASED ON-LINE INFORMATION RETRIEVAL AND VIEWING SYSTEM**

[76] Inventor: **Henry R. Williams, Jr.**, 11 Broadway, Third Floor, New York, N.Y. 10004

[21] Appl. No.: **09/034,773**

[22] Filed: **Mar. 2, 1998**

[51] **Int. Cl.**[7] **G06F 15/16**

[52] **U.S. Cl.** **709/202**; 709/203; 709/217

[58] **Field of Search** 709/202, 203, 709/217; 707/1–6, 10, 516, 104

[56] **References Cited**

U.S. PATENT DOCUMENTS

5,722,041	2/1998	Freadman	355/6.3
5,819,273	10/1998	Vora et al.	707/10
5,855,015	12/1998	Shoham	707/5
5,920,856	7/1999	Syeda-Mahmood	707/3
5,974,441	10/1999	Rogers et al.	709/200
5,983,200	11/1999	Slotznick	705/26
5,983,218	11/1999	Syeda-Mahmood	707/3
6,009,422	12/1999	Ciccarelli	707/4
6,029,165	2/2000	Gable	707/3

OTHER PUBLICATIONS

Sameer Madan, "Search the Web without a Headache," PC World (India), pp. 40–41, Feb. 1998.

Lingnau et al, "An HTTP–based Infrastructure for Mobile Agents," http://www.w3.org/Conferences/WWW4/Papers/150/, pp. 1–15, 1995.

Patricia Smith, "Web Compass Takes Web Searching in the Right Direction," Seybold Report on Desktop Publishing, vol. 10, No. 10, pp. 1–9, 1996.

Egyhazy et al, "Intelligent Web Search Agents," http://csgrad.cs.vt.edu/ntplunket/article.html, pp. 1–23, no date.

"Intermind Announces Approval of First Patent Application," dated Oct. 7, 1997, downloaded from http://www.intermind.com/inside/press_rel/100797_allow.html, 3 pages.

"About Intermind's Channel Communications Patents," downloaded from http://www.intermind.com/materials/patent_desc.html on Feb. 27, 1998, 5 pages.

"Frequently Asked Questions about Intermind's Patents," downloaded from http://www.intermind.com/materials/patent_faq.html on Feb. 27, 1998, 9 pages.

Primary Examiner—Mehmet B. Geckil

Attorney, Agent, or Firm—Blakely, Sokoloff, Taylor & Zafman LLP

[57] **ABSTRACT**

A Subject-specific Information Retrieval and Viewing System (SIRViS) enables multiple users of a local computer system to access information stored remotely on a wide area network. The SIRViS is designed to retrieve and display to a user information relating to a particular, predefined subject area. The SIRViS includes a graphical user interface including a control panel and a content viewer. The control panel enables each local user to define a unique set of search rules for locating information on the particular subject area stored in one or more remote databases across the network. The control panel provides each set of search rules to a search agent, which accesses content in the remote databases according to the search and stores the information in a local database, including maintaining the overall structure in which the data was stored in the remote database and associating retrieved information with particular sets of search rules. Any of the local users can use the content viewer to access and display information stored in the local database relating to the particular subject area and to that particular user. The local processing system may include multiple SIRViS, each of which is customized to retrieve and display information in a different subject area.

33 Claims, 6 Drawing Sheets

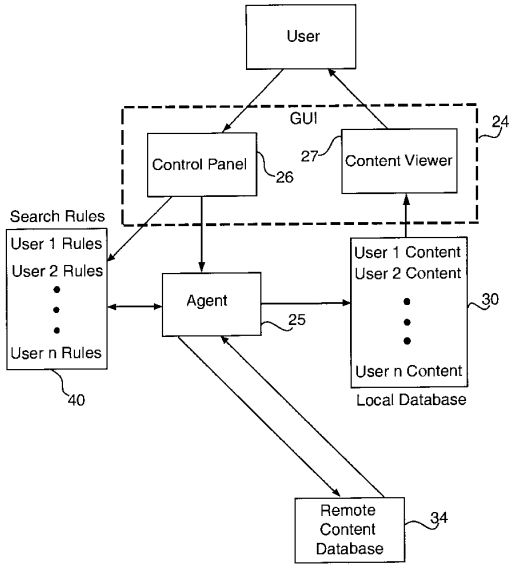

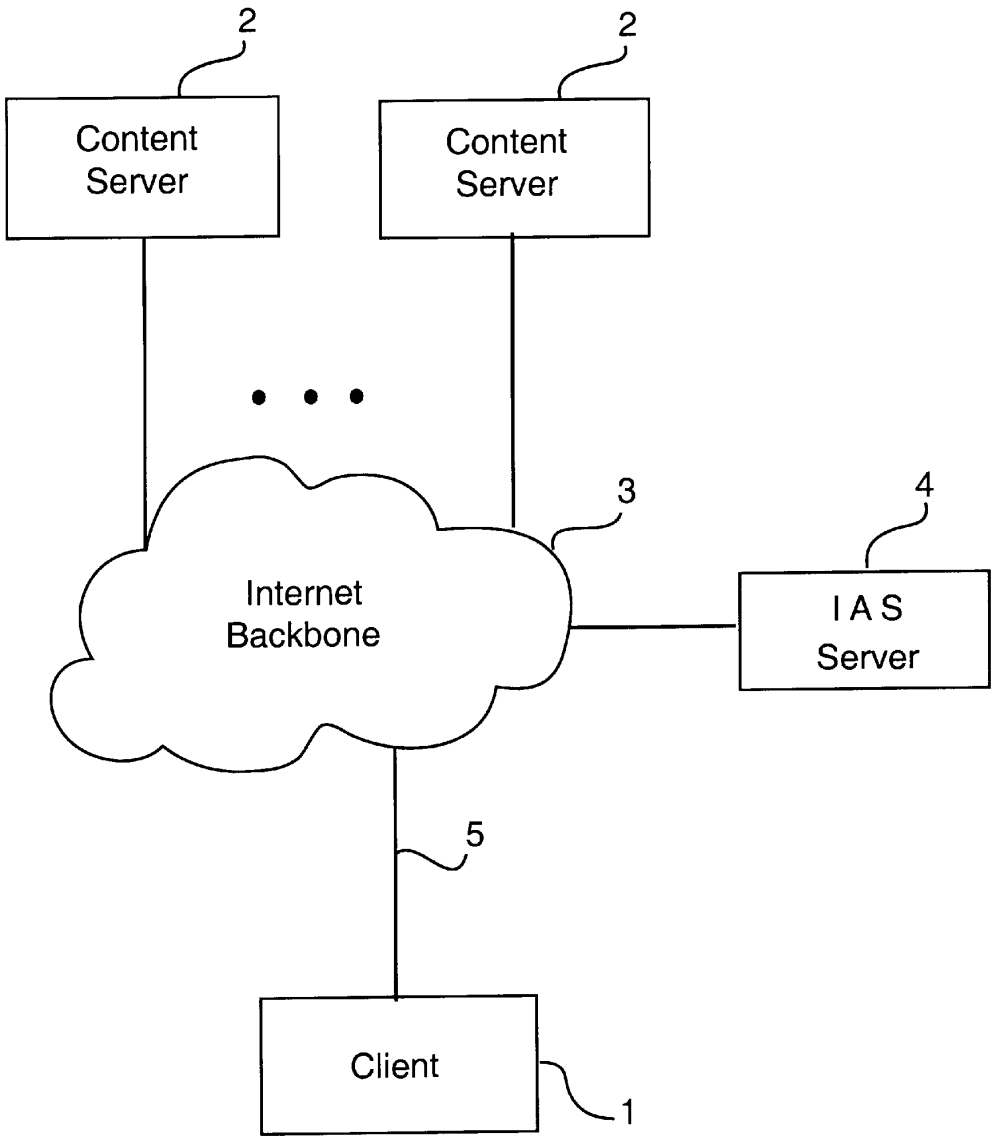
2
2
Content Server
Content Server
3
4
Internet Backbone
I A S Server
5
Client
1

FIG. 1

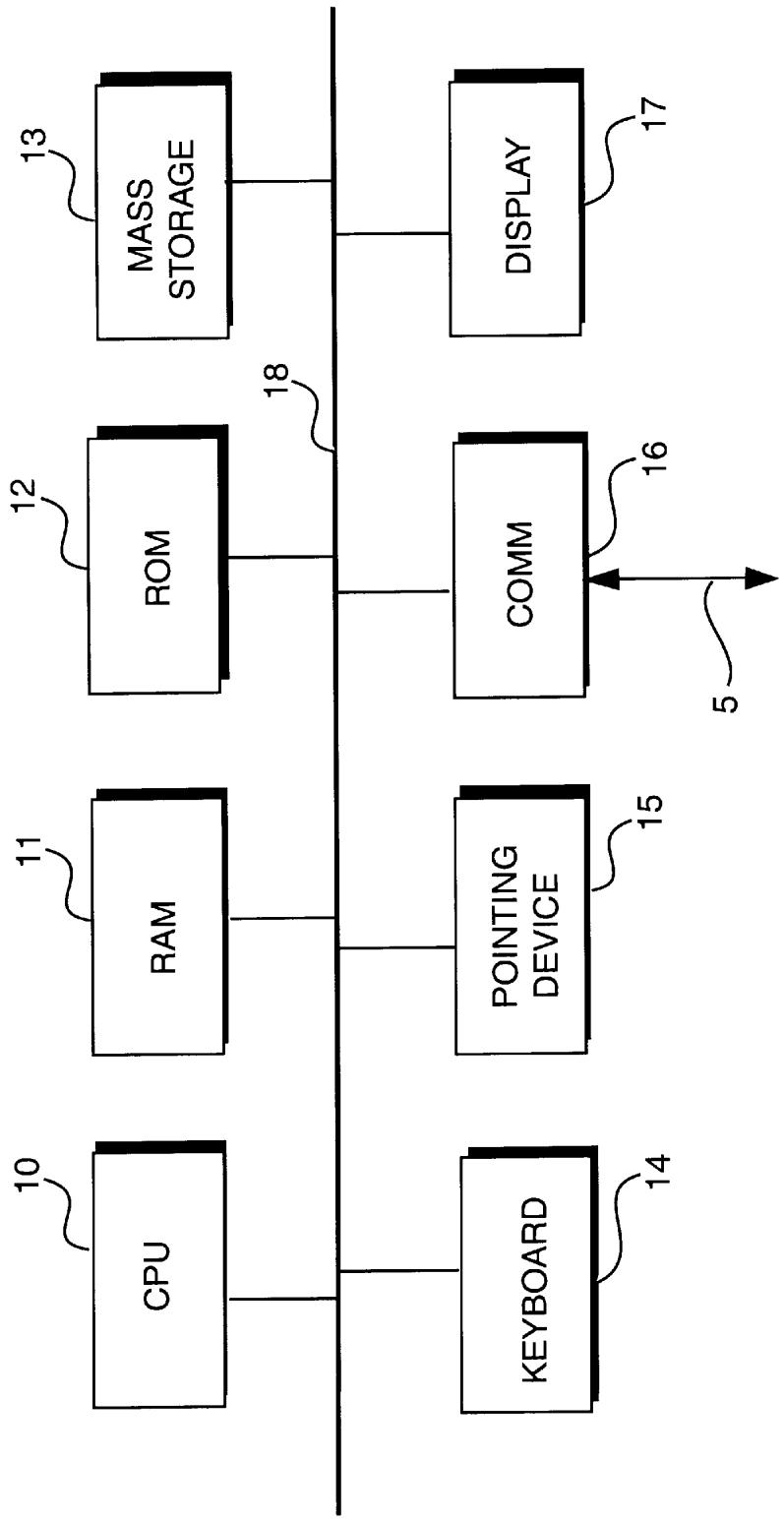
MASS STORAGE
13
DISPLAY
17
18
ROM
12
COMM
16
5
RAM
11
POINTING DEVICE
15
CPU
10
KEYBOARD
14

FIG. 2

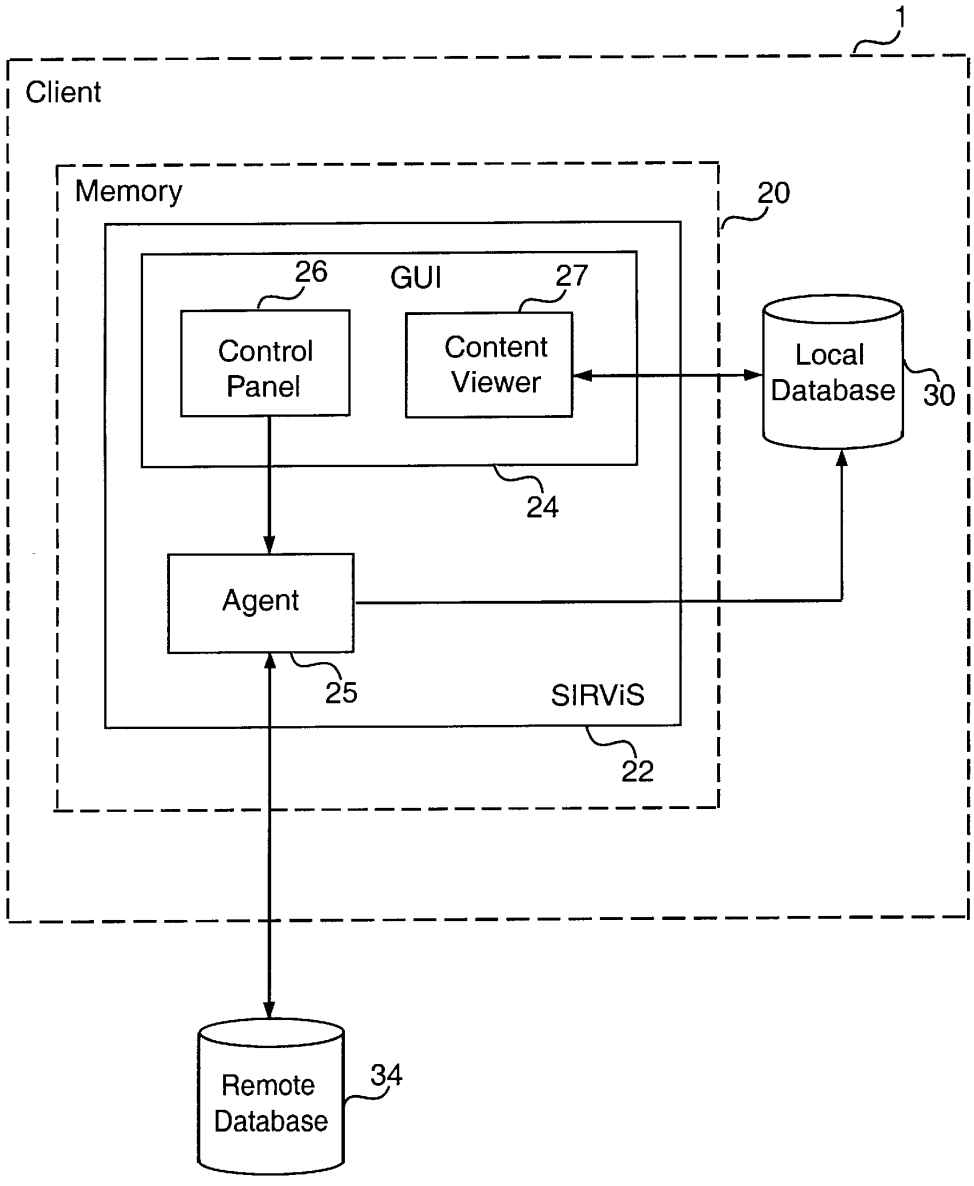
1
Client
Memory
20
26
GUI
27
Control Panel
Content Viewer
Local Database
30
24
Agent
25
SIRViS
22
Remote Database
34

FIG. 3

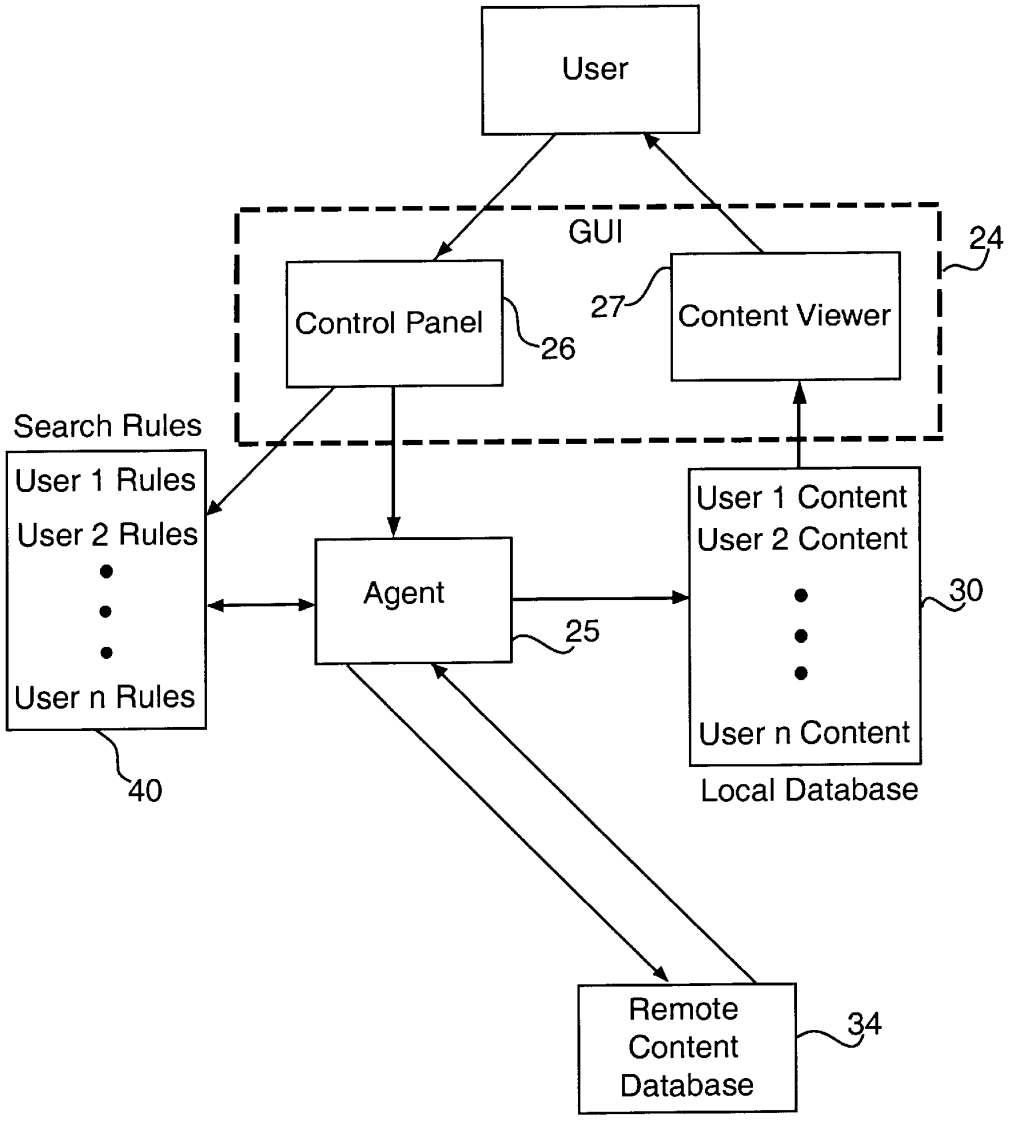
User
GUI
24
Control Panel
26
27
Content Viewer
Search Rules
User 1 Rules
User 2 Rules
User n Rules
40
Agent
25
User 1 Content
User 2 Content
User n Content
30
Local Database
Remote
Content
Database
34

FIG. 4

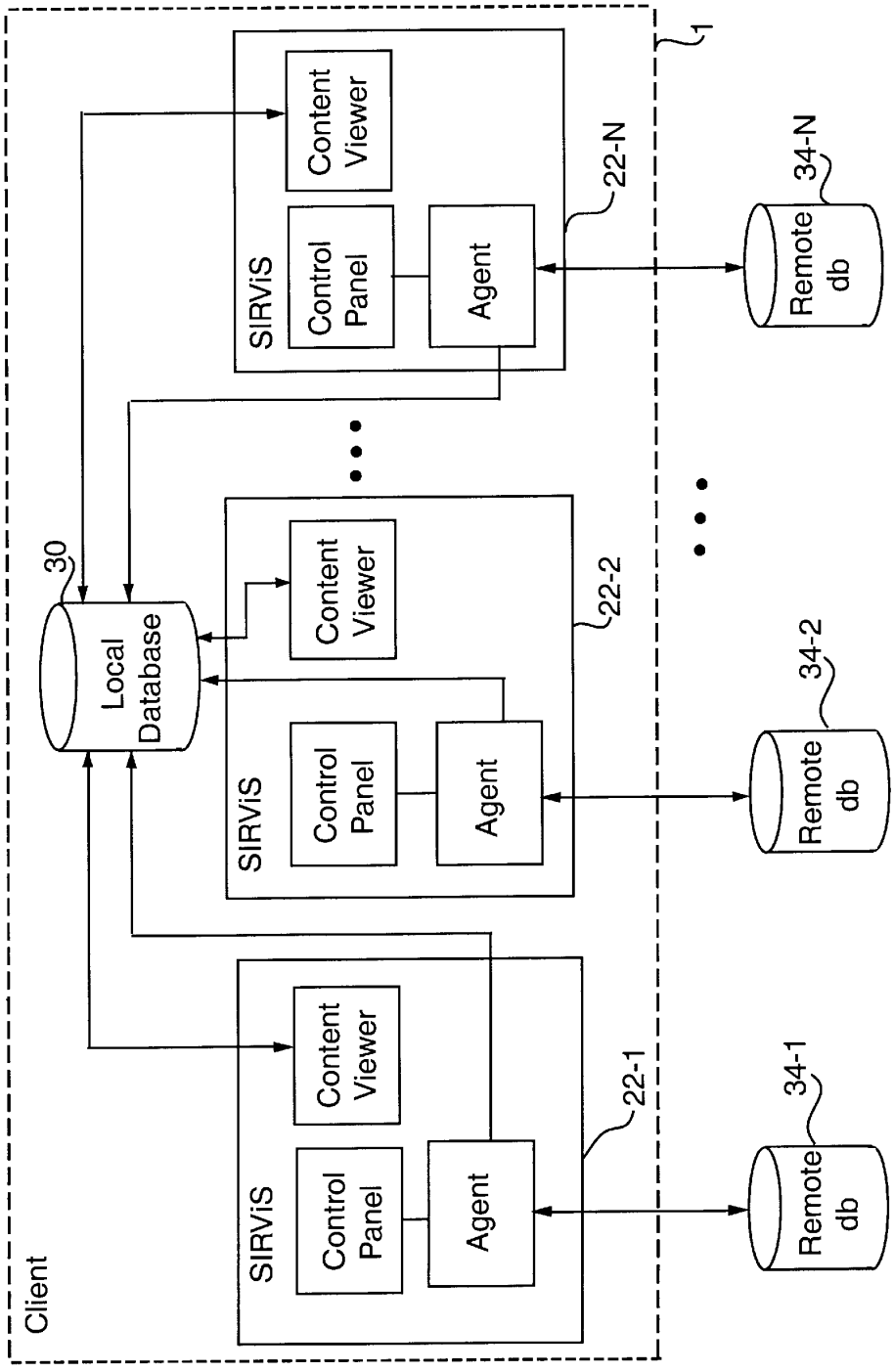
Client
1
SIRViS
Content Viewer
Control Panel
Agent
22-N
34-N
Remote db
22-2
34-2
22-1
34-1
30
Local Database

FIG. 5

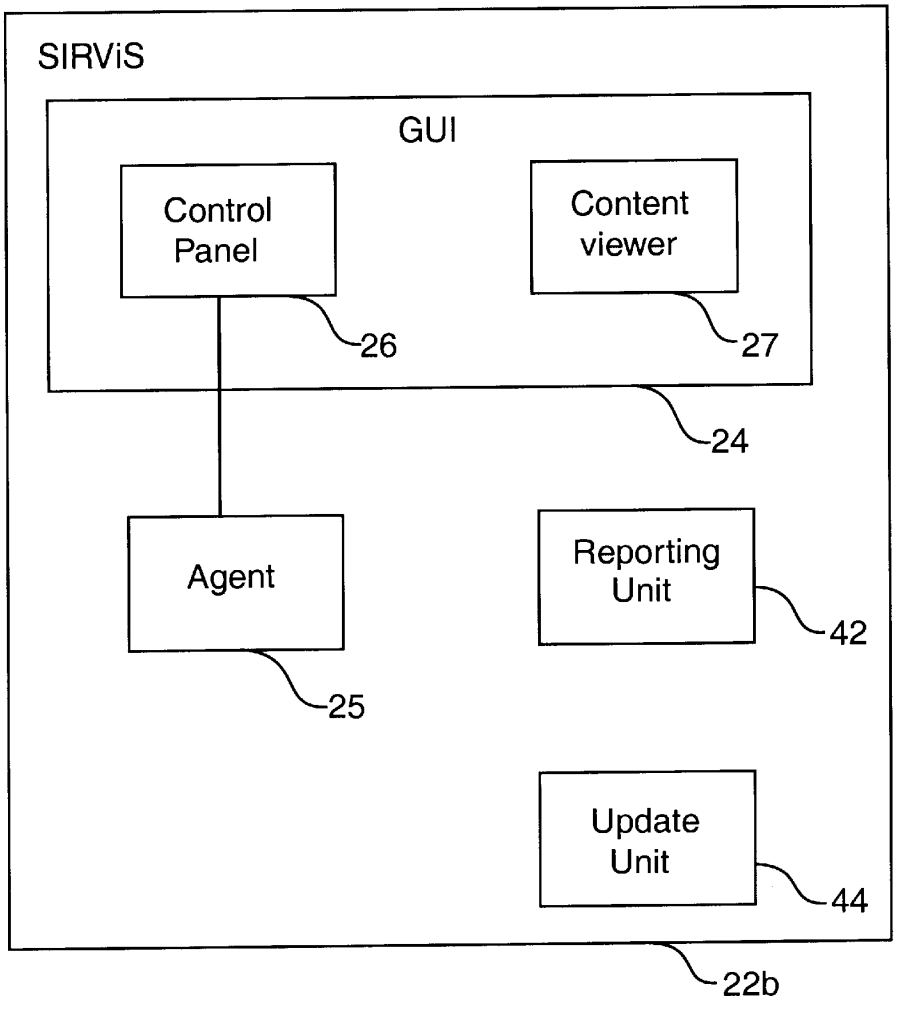
SIRViS
GUI
Control Panel
Content viewer
26
27
24
Agent
Reporting Unit
42
25
Update Unit
44
22b

FIG. 6

AGENT-BASED ON-LINE INFORMATION RETRIEVAL AND VIEWING SYSTEM

FIELD OF THE INVENTION

The present invention pertains to the field of computer networking. More particularly, the present invention relates to techniques for retrieving and viewing information on a wide area network.

BACKGROUND OF THE INVENTION

A number of technologies are currently available to allow consumers to access information stored remotely on networks such as the Internet, corporate intranets, etc. Browsers, for example, are a well-known class of software applications which enable computer users to download hypertext pages and other types of data from the World Wide Web and other remote sources. Another, more recently developed information access technology is commonly referred to as "push" technology. With push technology, a remote server generally gathers information on various topics from remote databases, packages the information into subject groupings called "channels", and automatically downloads selected channels to the user's computer. The user does not need to search for or request the information. The retrieved information may be automatically stored locally on the user's computer, such that the user can browse the information off-line at a time of his own choosing.

While information access technology has made significant advances, conventional information access tools have several problems, which prevent consumers from obtaining the full benefit of on-line information. One problem is the speed at which remotely stored information can be delivered to a user. Although the achievable data rates are generally increasing, very high speed data connections, such as T1 lines and the like, tend to be too expensive for individual consumers to afford and therefore tend to be limited mainly to commercial uses. Further, steadily increasing delays due to increased network usage contribute to the speed problem.

Push technology and local caching may be partial solutions to the speed issue. However, these solutions do not address a second problem, which is organization. In particular, conventional technologies, such as browsers and push technology, generally are focused on presentation rather than organization. Consequently, these technologies often do not provide information to a user in such a manner that it can be easily assimilated. This problem of organization is analogous to the notion of clipping articles out of a newspaper. Over time, a person may find a large number of newspaper articles interesting and therefore clip them out for future use. However, if the person ever wanted to see, for example, all of the articles from a particular newspaper, by a particular writer, and written in a particular month, he might find it difficult to sort through all of the accumulated articles. Essentially the same problem exists with regard to on-line information retrieved using conventional tools, such as Web browsers and push technology. Web pages, for example, have traditionally been designed to be pleasing in appearance, but not necessarily the most effective means of conveying large volumes of information to a user. Push technologies provide some improvement in organization by using channels or the like, but generally do not provide a user-friendly way for a person to access large volumes of stored information in the event that he wishes to archive the information for later use.

Hence, it is desirable to provide a technology for accessing information stored remotely on a network, such as the Internet, which overcomes the above noted disadvantages of conventional information access technologies. In particular, what is needed is an information access technology which provides a user with improved speed of access and improved organization of the delivered information.

SUMMARY OF THE INVENTION

The present invention includes a method of providing multiple local users with information stored remotely on a network. For each of the local users, a unique set of search criteria is generated relating to a single, predefined subject. Information relating to only the predefined subject is retrieved from a database on the network based on each set of search criteria, and the retrieved information is stored in a local database accessible to the local users. In particular embodiments, the present invention may include a user interface which enables each of the local users to access, from the local database, the information on the predefined subject and associated with the corresponding set of search criteria. Also, in particular embodiments the information is stored in the remote database according to a particular structure, and the search agent stores the information in the local database according to the same structure. Other features of the present invention will be apparent from the accompanying drawings and from the detailed description which follows.

BRIEF DESCRIPTION OF THE DRAWINGS

The present invention is illustrated by way of example and not limitation in the figures of the accompanying drawings, in which like references indicate similar elements and in which:

FIG. **1** illustrates a client computer system connected to a number of remote server computer systems on the Internet.

FIG. **2** is a block diagram illustrating an exemplary architecture for any of the computer systems of FIG. **1**.

FIG. **3** is a block diagram illustrating a subject-specific information retrieval and viewing system (SIRViS).

FIG. **4** is a block diagram illustrating certain functions of a SIRViS in greater detail.

FIG. **5** is a block diagram illustrating a local computer system including a number of SIRViS.

FIG. **6** is a block diagram illustrating a SIRViS including a reporting unit and an update unit.

DETAILED DESCRIPTION

An agent based on-line information retrieval and viewing system is described. In the following description, for purposes of explanation, numerous specific details are set forth in order to provide a thorough understanding of the present invention. It will be evident to one skilled in the art, however, that the present invention may be practiced without these specific details. In other instances, well-known structures and devices are shown in block diagram or other symbolic form in order to facilitate description of the present invention.

The present invention pertains to a technique for enabling multiple users of a local computer system to retrieve information stored in one or more remote servers on a network, such as on the Internet. As will be described, the present invention includes a Subject-specific Information Retrieval and Viewing System (SIRViS), which enables multiple users of a local computer system to access information stored remotely on the network. The SIRViS is designed to retrieve and display information relating only to a particular, pre-

defined subject area, in a manner that is tailored to each of multiple local users. The SIRViS generally includes a graphical user interface (GUI) and a search agent. A control panel component of the GUI enables each local user to define his own unique set of search rules for locating information on the particular subject area stored in one or more remote databases on the network. The control panel provides each set of search rules to the search agent. The search agent then automatically accesses content in the remote databases according to the search and stores the information in a local database. The search agent may retrieve the information periodically or at specified days or times, for example. Using a content viewer component of the GUI, each local user can access information stored in the local database relating to the particular subject area and corresponding to his own set of search rules. The local storage of retrieved information improves the overall speed of access perceived by the user.

In contrast with conventional information access techniques, such as Web browsers and push technology, the search agent stores information in the local database using the same organizational structure in which the information was stored in the remote database. This structure is selected in advance to be suitable for effectively conveying information on the predefined subject area to a user in a format that can be easily assimilated. The present invention is not limited to use with any particular type of data structure. However, the designer of a given SIRViS will have knowledge of the data structure used in the appropriate remote databases and will design the search agent and the content viewer to be compatible with this structure. Thus, the maintenance of the structure of the retrieved information and the subject-specific nature of the SIRViS improve the organization of information delivered to the user, in comparison to traditional techniques.

FIG. **1** illustrates a network configuration in which the present invention can be employed. In FIG. **1**, a client computer system **1** is connected to one or more remote server computer systems ("content servers") **2** by the Internet **3**. The client system **1** may have multiple users who wish to access, from time to time, information stored in databases on the content servers **2** relating to various topics, such as news, cooking, weather, sports, etc. Accordingly, one or more SIRViS operating in the client system **1** allow the users to access that information. In the description which follows, it is generally assumed that a SIRViS is embodied as application software which executes on the client computer system **1**. Note, however, that a SIRViS and any component thereof can alternatively be embodied in hardware or in a combination of hardware and software.

Associated with the present invention is a proprietary, subscription information access service (IAS). The IAS creates and maintains multiple SIRViSs, each custom-designed to retrieve and display information on a specific subject. Each SIRViS maintains knowledge of the locations of one or more particular databases on its associated subject in one or more particular content servers **2**. A user of the client system **1** subscribes to the IAS to receive at least one SIRViS for accessing information on the remote content servers **2**. Accordingly, the IAS maintains one or more server computer systems ("IAS server") **4** connected to the Internet. One or more appropriate SIRViS can be downloaded to the client system **1** from the IAS server **4** via the Internet **3**. The client system **1** may also have a direct (e.g., dial-up) connection to the IAS server **4**, through which a SIRViS can be downloaded to the client system **1**. Alternatively, one or more SIRViS can be loaded into the client system **1** from a portable storage medium, such as a magnetic disk or tape, a magneto-optical (MO) storage device, or any of various types of optical storage media, such as Digital Versatile Disk (DVD) or compact disk ROM (CD-ROM).

Which particular SIRViSs are loaded into the client system **1** depends on which topics interest the users of the client system **1**. The users' interests may be determined in any of various ways, a discussion of which is not necessary for purposes of practicing the present invention. After each SIRViS is loaded into the client system **1**, each SIRViS independently executes on the client system **1** to provide the local users with access to information stored on the content severs **2**, in a manner which will be described.

Note that each of the computer systems shown in FIG. **1** may represent a number of interconnected computer systems. For example, although the IAS server **4** is shown as a single computer system, it may actually comprise multiple computer systems, which may be connected to each other on a local area network (LAN) coupled to the Internet **3**, or which may be geographically separated and connected to the Internet **3** at different locations. Similarly, the client system **1** or any of the content servers **2** may represent multiple computer systems connected to each other on a LAN, corporate intranet, or the like.

FIG. **2** illustrates, in block diagram form, a computer system architecture that is representative of any of the computer systems shown in FIG. **1**. The system shown in FIG. **2** represents a conventional personal computer (PC). Note, however, that many other architectures and types of systems may be employed without departing from the scope of the present invention. Any of the computer systems represented in FIG. **1** may be a less conventional type of computer system. For example, the client system **1** may be a "set-top box" type of processing system that uses a standard television set as a display device.

The computer system of FIG. **2** includes a central processing unit (CPU) **10**, random access memory (RAM) **11**, read-only memory (ROM) **12**, each connected to a bus system **18**. The bus system **18** in FIG. **2** may represent one or more buses connected to each other through various bridges, controllers and/or adapters, such as are well-known in the art. For example, the bus system **18** may include a system bus which connects CPU **10** to RAM **11** and which is connected through an adapter to one or more expansion buses, such as a Peripheral Component Interconnect (PCI) bus. Also coupled to the bus system **18** are a mass storage device **13**, a keyboard **14**, a pointing device **15**, a data communication device **16**, and a display device **17**.

The pointing device **15** may be any suitable device for enabling a user to position a cursor or pointer on the display device **17**, such as a mouse, trackball, touchpad, stylus with light pen, or the like. The display device **17** may be any suitable device for displaying alphanumeric, graphical and/or video data to a user, such as a cathode ray tube (CRT), a liquid crystal display (LCD), or the like. Mass storage device **17** may be any suitable device for storing large volumes of data, such as a magnetic disk or tape, an MO storage device, or any of various types of optical storage media, such as DVD, CD-ROM, etc. Data communication device **19** may be any device suitable for or enabling the computer system to communicate data with a remote computer system over communication link **5**, such as a conventional telephone modem, a cable television modem, an Integrated Services Digital Network (ISDN) adapter, a Digital Subscriber Line (xDSL) adapter, or the like.

The elements shown in FIG. **2** perform their conventional functions known in the art. In particular, mass storage **13** is

used to provide non-volatile storage of software instructions and data, whereas RAM **11** is a system memory for providing temporary storage of the data and the software instructions when executed by the CPU **10**. Software instructions for implementing the SIRViS and other aspects of the present invention may be downloaded to mass storage device **13** and/or RAM **11** from a remote server via the network connection **5**.

FIG. **3** illustrates an embodiment of the SIRViS of the present invention. As noted, the SIRViS may be embodied as software executing on the client system **1**. Hence, in FIG. **3**, SIRViS **22** is shown as stored within a memory **20** in the client system **1**. Memory **20** may represent RAM **11** or mass storage device **13** in FIG. **3**, for example, or a combination of those elements. Note that while various functions are attributed in this description to the SIRViS and its components, in the case of a software embodiment, it is actually the execution by a processor (e.g., CPU **10**) of software instructions representing the SIRViS and its components which causes the described functions to occur.

The SIRViS **22** includes a GUI **24** and a search agent **25** configured to cooperate with each other. The GUI **24** includes a control panel component **26** and a content viewer component **27**. The control panel **26** allows each user of the client system **1** to create his own unique set of configurations, or search rules, which are stored within the client system **1**. Thus, each member of a family having a home PC, for example, can define his or her own set of search rules for accessing information on a particular subject area. The control panel **26** may also provide various other functions for allowing a user to control and maintain the SIRViS **22**. The control panel **26** interacts with users via dialog boxes and other features associated with conventional windows-based environments. These features may be manipulated by the user using well-known techniques, such as the manual positioning of a pointer or cursor on a display device using a mouse, trackball, touchpad, or other pointing device.

In alternative embodiments, search rules may not be specified explicitly by a user. Instead, search rules may be generated automatically based on observations of the users's actions, such as which types of on-line information the user accesses most frequently. In that case, such observation and/or rule generation functions may be performed by the control panel **26**, by a dedicated rule generation component within the SIRViS, or by an entity separate from the SIRViS **22**.

The search agent **25** is a search engine which separately uses each set of search rules to access information on a predefined subject area in one or more remote databases **34**. The remote databases **34** are stored in one or more of the remote content servers **2** (see FIG. **1**). The search agent **25** may access the remote databases **34** at regular, predefined intervals or at pre-specified days or times. The agent **25** stores the retrieved information in a local database **30**. In doing so, the search agent **25** creates an association in the local database **30** between stored groups of information and the corresponding set of search rules used to retrieve the groups of information, thereby associating information with particular users.

The search agent is generally described herein as residing on the client system **1**. Note, however, that in alternative embodiments of the present invention, the search agent **25** may be located remotely from the client system **1** and/or separate from the GUI **24**. For example, the search agent **25** might be local to a remote database **34** and therefore might reside in one of the remote content servers **2**. In that case, communication between the search agent **25** and the GUI **24** may take place over the Internet **3**.

The local database **30** is a structured database (e.g., relational, object oriented, etc.), which allows structured, field-based queries, such as in a structured query language (SQL) database (as opposed to text searches). The local database **30** may be located within the client system **1**, as shown in FIG. **3**, although that is not necessarily the case. However, the local database **30** is much "closer" to the client system **1** in terms of data access time than are the remote databases **34**. The local database **30** may be stored in a mass storage device, such as mass storage device **13** in FIG. **2**.

When a user wishes to view the retrieved data for the defined subject area, the user invokes the content viewer **27**, which accesses the information from the local database **30** and displays it to the user. The content viewer **27** provides a conventional windows-based environment to interact with the user. In certain embodiments, the content viewer **27** may provide an environment in which the user identifies himself or is automatically identified by the client system **1**, and the user, from the point of identification, is presented with, or is only allowed access to, content collected based on his or her own set of search rules for the given subject area.

Hence, each SIRViS **22** is custom designed to retrieve and display to a user information relating to a particular subject area. Accordingly, the control panel **26**, agent **25**, and content viewer **27** are specifically designed to access a specific class of information stored according to a particular, predefined structure. Specifically, the control panel **26** is custom designed to enable multiple users to each specify their own set of search rules for the particular subject area. The agent **25** is designed to use these sets of search rules to retrieve a specific type of information from the predefined remote databases **34** and to store that information in the local database **30** using the same data structure in which the data is stored in the remote databases **34**. The agent **25** therefore maintains knowledge of which remote databases to search. Such knowledge may be in the form of a simple stored list of paths to one or more data files. The content viewer **27** is designed to have knowledge of this data structure and to retrieve the information from the local database **30** accordingly. The content viewer **27** is further designed to retrieve stored information associated with a particular user (i.e., information retrieved using a particular set of search rules).

Referring now to FIG. **4**, when a user invokes the SIRViS **22** for the first time after it is loaded into the client system **1**, the user accesses the control panel **26** to define his set of search rules for the relevant subject area. The control panel **26**, therefore, maintains a dataset **40** containing the search rules for all of the authorized users of the client system **1**. The agent **25** accesses the dataset **40**, selects the set of rules for a particular user, retrieves information from the remote database **34**, and stores the information within the local database **30**, including associating the retrieved information with a particular user (or set of search rules). In one embodiment, the agent **25** searches the remote database **34** on behalf of one or more users regardless of whether the client system **1** is currently in use by any user; hence, searches are generally performed automatically. Searches may be performed periodically or at specified days or times. However, it is also contemplated that the agent **25** may initiate a search of the remote databases **34** directly in response to a user request.

The client system **1** may include more than one SIRViS, each of which relates to a different subject area. Thus, as

shown in FIG. **5**, the client system **1** may include a number of individual SIRViSs, **22-1**, **22-2**, . . . , **22**-N, each of which relates to a particular subject area. Each of the SIRViSs **22-1** through **22**-N is configured to access data from a particular group of remote databases **34-1**, **34-2**, . . . , **34**-N, respectively, and to store that information in the local database **30**. If desired, multiple local databases may be used, such as one for each SIRViS.

Because information is retrieved by the SIRViS automatically and stored in the local database, the speed at which a user can access and view this information is improved in comparison with conventional technologies. Moreover, because each SIRViS is customized to retrieve information for a particular subject area and to retain the structure in which that information is stored, the information is stored in the local database in a far more organized manner than with conventional information retrieval tools. The present invention, therefore, allows a user to access information on a given topic much more quickly and easily than with conventional information access tools.

In addition to the functions described above, a SIRViS may include the capability to automatically update itself in order to identify newly available remote databases or to provide improved functionality. Thus, referring to FIG. **6**, a SIRViS **22***b* according to one embodiment includes an update unit **44**, in addition to the components mentioned above. The update unit **44** causes the SIRViS **22***b* to automatically update itself when an updated version is available, such as when the list of remote databases has been updated or when the program code has been improved. When a more updated version of the SIRViS is available, the update unit **44** automatically causes the update to be downloaded to the client system **1** from a remote server. The update unit **44** may automatically query the IAS server **4** to determine if an update is available, or it may simply wait for a message from the IAS server **4** indicating that an update is available. Updating the SIRViS **22***b* may entail replacing or modifying the entire SIRViS **22***b* or particular components of the SIRViS **22***b*, such as the agent **25**, the control panel **26**, and/or the content viewer **27**.

A SIRViS of the present invention may also include the capability to record accesses by a given user to particular pieces of content stored in a local database, and to report these accesses, either in real-time or in batch mode, to some remote database, such as the system server **4**, or one of the content servers **2**. This information may be used by the IAS or third parties to maintain user profiles. Accordingly, as shown in FIG. **6**, the SIRViS **22***b* of the present invention includes a reporting unit **42** for performing these recording and reporting functions. Note that while the reporting unit **42** and the update unit **44** are shown as components of the SIRViS **22***b*, alternatively they may be provided as separate entities which function independently of the SIRViS **22***b*.

Thus, an agent based on-line information retrieval and viewing system has been described. Although the present invention has been described with reference to specific exemplary embodiments, it will be evident that various modifications and changes may be made to these embodiments without departing from the broader spirit and scope of the invention as set forth in the claims. Accordingly, the specification and drawings are to be regarded in an illustrative sense rather than a restrictive sense.

What is claimed is:

1. A device for providing a plurality of local users with information stored remotely on a network, the device comprising:

a rule generation unit configured to define, for each of the plurality of local users, a set of search rules applicable to a predefined subject; and

a search agent configured to retrieve information on only the predefined subject from a database on the network based on each set of search rules and to store the retrieved information in a local database.

2. A device according to claim **1**, further comprising a user interface configured to enable each of the plurality of local users to access, from the local database, the information on the predefined subject associated with the corresponding set of search criteria.

3. A device according to claim **1**, wherein the search agent is further configured to create an association in the local database between the retrieved information and particular ones of the local users based on the set of search rules used to retrieve the information.

4. A device according to claim **1**, wherein the information is stored in the remote database according to a structure, and wherein the agent is further configured to store the information in the local database according to said structure.

5. A processing system for providing a plurality of local users with information stored remotely over a network, the system comprising:

a first user interface for enabling each of a plurality of local users to define a different corresponding set of search rules applicable to a predefined subject;

a search agent configured to receive each set of search rules and to automatically retrieve information on only the predefined subject from a database on the network based on each set of search rules and to store the retrieved information in a local database; and

a second user interface for enabling each of the plurality of local users to access from the local database a portion of the information on the predefined subject associated with the corresponding set of search rules.

6. A processing system according to claim **5**, wherein the information stored in the remote database comprises a plurality of records, each of the records having a structure, and wherein the agent stores the information in the local database in the form of records having said structure.

7. A processing system according to claim **5**, further comprising an update unit for periodically determining whether an updated version of the search agent is available from a remote database and, if an updated version is available, for retrieving the updated version.

8. A processing system according to claim **5**, further comprising an update unit for periodically determining whether an updated version of any of the search agent, the first user interface, or the second user interface is available from a remote database and, if an updated version is available, for retrieving the updated version.

9. A processing system according to claim **5**, further comprising a reporting unit for automatically reporting, to a remote computer system, accesses to the local database.

10. A processing system according to claim **9**, the reporting unit further for reporting accesses to particular types of content in the local database.

11. A processing system according to claim **9**, the reporting unit further for reporting accesses to the local database by a particular user.

12. A processing system according to claim **5**, the second user interface comprising:

means for receiving user inputs identifying one of the local users; and means for retrieving from the local database only a portion of the information on the predefined subject, the portion corresponding to the set of search rules associated with said one of the local users; and

means for outputting the portion of the information.

13. A local computer system connected to a plurality of remote computer systems on a network, the local computer system comprising:

a plurality of user interface units configured to receive user inputs, each user interface unit associated with a different one of a plurality of subject areas, each user interface unit further configured to receive, from each of a plurality of users, a separate set of search rules relating to the associated subject area;

a plurality of agents, each agent associated with one of the subject areas, each agent configured to retrieve information related to the associated subject area from at least one of the remote computer systems based on at least one specified set of search rules and to store the retrieved information in a local database; and

a plurality of viewing units, each viewing unit configured to retrieve information from the local database corresponding to one of the subject areas in response to inputs from any of the plurality of users and to display the retrieved information.

14. A local processing system according to claim 13, wherein each of the viewing units is further configured to receive user inputs identifying one of the users and to retrieve from the local database information corresponding to the set of search rules associated with said one of the users.

15. A local processing system according to claim 13, further comprising a reporting unit for reporting accesses to the local database to a remote computer system.

16. A local processing system according to claim 13, wherein the information is stored in each of the remote computer systems according to a structure, and wherein the agent maintains each said structure when storing the information in the local database.

17. A local processing system according to claim 13, further comprising an update unit configured to periodically determine whether an updated version of the search agent is available from a remote database and, if an updated version is available, to retrieve the updated version.

18. A local processing system according to claim 13, further comprising a reporting unit configured to report accesses to the local database to a remote computer system.

19. A local processing system according to claim 13, wherein the network is a wide area network.

20. A method of providing a plurality of local users with information stored remotely on a network, the method comprising:

for each of the plurality of local users, generating a unique set of search criteria relating to a single, predefined subject;

retrieving information relating to only the predefined subject from a database on the network based on each set of search criteria; and

storing the retrieved information in a local database accessible to the plurality of local users.

21. A method according to claim 20, wherein said storing comprises creating an association in the local database between the retrieved information and particular ones of the local users based on the set of search criteria used to retrieve the information.

22. A method according to claim 20, further comprising:

receiving a query, the query including information identifying one of the local users; and

retrieving from the local database only a portion of the information on the predefined subject, the portion corresponding to the set of search criteria associated with said one of the local users; and

outputting the portion of the information.

23. A method according to claim 20, wherein said generating comprises inputting each set of search criteria at one processing system on the network, the network comprising a plurality of processing systems.

24. A method according to claim 23, wherein said outputting comprises outputting the portion of the information from said one processing system.

25. A method according to claim 20, wherein the information is stored in the remote database according to a structure, and wherein storing the retrieved information in a local database comprise storing the information in the local database using the same structure in which said information was stored in the remote database.

26. A method according to claim 20, further comprising reporting accesses to the local database to a remote computer system.

27. A method according to claim 26, wherein said reporting accesses comprises reporting accesses to particular types of content in the local database.

28. A method according to claim 26, wherein said reporting accesses comprises reporting accesses to the local database by a particular user.

29. A method of providing a plurality of local users with information stored remotely over a network, the method comprising:

using a computer system on the network to receive a set of user inputs from each of the plurality local users, each set of user inputs for creating a set of search rules for the corresponding local user for a predefined subject;

retrieving information relating to only the predefined subject from a remote database on the network;

storing the retrieved information on the predefined subject in a local database;

receiving a set of user inputs from one of the local users; and

responding to the set of user inputs by retrieving from the local database a portion of the information on the predefined subject, the portion corresponding to the set of search rules associated with said one of the local users, and by outputting the information to said one of the local users.

30. A method according to claim 29, wherein receiving the set of user inputs from said one of the local users comprises using the computer system to receive the set of user inputs from said one of the local users; and wherein outputting the information to said one of the local users comprises using the computer system to output the information to said one of the local users.

31. A method according to claim 29, wherein the information is stored in the remote database according to a structure, and wherein storing the retrieved information in a local database comprise storing the information in the local database using the same structure in which said information was stored in the remote database.

32. A processing system for providing a plurality of local users with records stored remotely, the processing system comprising:

a first user interface to enable each of a plurality of local users to define a different corresponding set of search rules applicable to a predefined subject;

a remote database having a plurality of records with a structure;

a search agent to receive each set of search rules and to automatically retrieve records on only the predefined

subject from the remote database based on each set of search rules and to store the retrieved records in a local database with the same structure as the remote database; and

a second user interface to enable each of the plurality of local users to access from the local database a portion of the records on the predefined subject associated with the corresponding set of search rules.

33. A method of providing a plurality of local users with information stored remotely on a network, the method comprising:

receiving from a plurality of user interface units a corresponding set of search criteria;

generating unique sets of search criteria relating to predefined subjects;

retrieving from a remote structured database on the network only those records relating to the predefined subjects based on the unique sets of search criteria;

storing on a local computer system the retrieved records in the same structure as the remote structured database; and

presenting to the plurality of user interface units records retrieved from the local computer system corresponding to the set of search criteria.

* * * * *

PATENT APPLICATION SERIAL NO. 09/034773

U.S. DEPARTMENT OF COMMERCE
PATENT AND TRADEMARK OFFICE
FEE RECORD SHEET

03/13/1998 DBURNS 00000029 09034773
01 FC:101 790.00 OP
02 FC:102 164.00 OP
03 FC:103 242.00 OP

PTO-1556
(5/87)

09/034773

ABSTRACT OF THE DISCLOSURE

A Subject-specific Information Retrieval and Viewing System (SIRViS) enables multiple users of a local computer system to access information stored remotely on a wide area network. The SIRViS is designed to retrieve and display to a user information relating to a particular, predefined subject area. The SIRViS includes a graphical user interface including a control panel and a content viewer. The control panel enables each local user to define a unique set of search rules for locating information on the particular subject area stored in one or more remote databases across the network. The control panel provides each set of search rules to a search agent, which accesses content in the remote databases according to the search and stores the information in a local database, including maintaining the overall structure in which the data was stored in the remote database and associating retrieved information with particular sets of search rules. Any of the local users can use the content viewer to access and display information stored in the local database relating to the particular subject area and to that particular user. The local processing system may include multiple SIRViS, each of which is customized to retrieve and display information in a different subject area.

UNITED STATES PATENT APPLICATION

FOR

Agent-Based On-Line Information Retrieval and Viewing System

INVENTOR:

Henry R. Williams, Jr.

Prepared by:

BLAKELY, SOKOLOFF, TAYLOR & ZAFMAN LLP
12400 WILSHIRE BOULEVARD
SEVENTH FLOOR
LOS ANGELES, CALIFORNIA 90025
(408) 720-8598

Attorney's Docket No. 003359.P004

"Express Mail" mailing label number EL034142405US

Date of Deposit 3/2/98

I hereby certify that this paper or fee is being deposited with the United States Postal Service "Express Mail Post Office to Addressee" service under 37 CFR 1.10 on the date indicated above and is addressed to the Commissioner of Patents and Trademarks, Washington, D.C. 20231.

Grace R. Cruz
(Typed or printed name of person mailing paper or fee)

(Signature of person mailing paper or fee)

09/034773

Agent-Based On-Line Information Retrieval and Viewing System

FIELD OF THE INVENTION

The present invention pertains to the field of computer networking. More particularly, the present invention relates to techniques for retrieving and viewing information on a wide area network.

BACKGROUND OF THE INVENTION

A number of technologies are currently available to allow consumers to access information stored remotely on networks such as the Internet, corporate intranets, etc. Browsers, for example, are a well-known class of software applications which enable computer users to download hypertext pages and other types of data from the World Wide Web and other remote sources. Another, more recently developed information access technology is commonly referred to as "push" technology. With push technology, a remote server generally gathers information on various topics from remote databases, packages the information into subject groupings called "channels", and automatically downloads selected channels to the user's computer. The user does not need to search for or request the information. The retrieved information may be automatically stored locally on the user's computer, such that the user can browse the information off-line at a time of his own choosing.

While information access technology has made significant advances, conventional information access tools have several problems, which prevent consumers from obtaining the full benefit of on-line information. One problem is the speed at which remotely stored information can be delivered to a user. Although the achievable data rates are generally increasing, very high speed data connections, such as T1 lines and the like, tend to be too expensive for

individual consumers to afford and therefore tend to be limited mainly to commercial uses. Further, steadily increasing delays due to increased network usage contribute to the speed problem.

Push technology and local caching may be partial solutions to the speed issue. However, these solutions do not address a second problem, which is organization. In particular, conventional technologies, such as browsers and push technology, generally are focused on presentation rather than organization. Consequently, these technologies often do not provide information to a user in such a manner that it can be easily assimilated. This problem of organization is analogous to the notion of clipping articles out of a newspaper. Over time, a person may find a large number of newspaper articles interesting and therefore clip them out for future use. However, if the person ever wanted to see, for example, all of the articles from a particular newspaper, by a particular writer, and written in a particular month, he might find it difficult to sort through all of the accumulated articles. Essentially the same problem exists with regard to on-line information retrieved using conventional tools, such as Web browsers and push technology. Web pages, for example, have traditionally been designed to be pleasing in appearance, but not necessarily the most effective means of conveying large volumes of information to a user. Push technologies provide some improvement in organization by using channels or the like, but generally do not provide a user-friendly way for a person to access large volumes of stored information in the event that he wishes to archive the information for later use.

Hence, it is desirable to provide a technology for accessing information stored remotely on a network, such as the Internet, which overcomes the above noted disadvantages of conventional information access technologies. In

particular, what is needed is an information access technology which provides a user with improved speed of access and improved organization of the delivered information.

SUMMARY OF THE INVENTION

The present invention includes a method of providing multiple local users with information stored remotely on a network. For each of the local users, a unique set of search criteria is generated relating to a single, predefined subject. Information relating to only the predefined subject is retrieved from a database on the network based on each set of search criteria, and the retrieved information is stored in a local database accessible to the local users. In particular embodiments, the present invention may include a user interface which enables each of the local users to access, from the local database, the information on the predefined subject and associated with the corresponding set of search criteria. Also, in particular embodiments the information is stored in the remote database according to a particular structure, and the search agent stores the information in the local database according to the same structure. Other features of the present invention will be apparent from the accompanying drawings and from the detailed description which follows.

5

BRIEF DESCRIPTION OF THE DRAWINGS

The present invention is illustrated by way of example and not limitation in the figures of the accompanying drawings, in which like references indicate similar elements and in which:

Figure 1 illustrates a client computer system connected to a number of remote server computer systems on the Internet.

Figure 2 is a block diagram illustrating an exemplary architecture for any of the computer systems of Figure 1.

Figure 3 is a block diagram illustrating a subject-specific information retrieval and viewing system (SIRViS).

Figure 4 is a block diagram illustrating certain functions of a SIRViS in greater detail.

Figure 5 is a block diagram illustrating a local computer system including a number of SIRViS.

Figure 6 is a block diagram illustrating a SIRViS including a reporting unit and an update unit.

6

DETAILED DESCRIPTION

An agent based on-line information retrieval and viewing system is described. In the following description, for purposes of explanation, numerous specific details are set forth in order to provide a thorough understanding of the present invention. It will be evident to one skilled in the art, however, that the present invention may be practiced without these specific details. In other instances, well-known structures and devices are shown in block diagram or other symbolic form in order to facilitate description of the present invention.

The present invention pertains to a technique for enabling multiple users of a local computer system to retrieve information stored in one or more remote servers on a network, such as on the Internet. As will be described, the present invention includes a Subject-specific Information Retrieval and Viewing System (SIRViS), which enables multiple users of a local computer system to access information stored remotely on the network. The SIRViS is designed to retrieve and display information relating only to a particular, predefined subject area, in a manner that is tailored to each of multiple local users. The SIRViS generally includes a graphical user interface (GUI) and a search agent. A control panel component of the GUI enables each local user to define his own unique set of search rules for locating information on the particular subject area stored in one or more remote databases on the network. The control panel provides each set of search rules to the search agent. The search agent then automatically accesses content in the remote databases according to the search and stores the information in a local database. The search agent may retrieve the information periodically or at specified days or times, for example. Using a content viewer component of the GUI, each local user can access information stored in the local

database relating to the particular subject area and corresponding to his own set of search rules. The local storage of retrieved information improves the overall speed of access perceived by the user.

In contrast with conventional information access techniques, such as Web browsers and push technology, the search agent stores information in the local database using the same organizational structure in which the information was stored in the remote database. This structure is selected in advance to be suitable for effectively conveying information on the predefined subject area to a user in a format that can be easily assimilated. The present invention is not limited to use with any particular type of data structure. However, the designer of a given SIRViS will have knowledge of the data structure used in the appropriate remote databases and will design the search agent and the content viewer to be compatible with this structure. Thus, the maintenance of the structure of the retrieved information and the subject-specific nature of the SIRViS improve the organization of information delivered to the user, in comparison to traditional techniques.

Figure 1 illustrates a network configuration in which the present invention can be employed. In Figure 1, a client computer system 1 is connected to one or more remote server computer systems ("content servers") 2 by the Internet 3. The client system 1 may have multiple users who wish to access, from time to time, information stored in databases on the content servers 2 relating to various topics, such as news, cooking, weather, sports, etc. Accordingly, one or more SIRViS operating in the client system 1 allow the users to access that information. In the description which follows, it is generally assumed that a SIRViS is embodied as application software which executes on the client computer system

1. Note, however, that a SIRViS and any component thereof can alternatively be embodied in hardware or in a combination of hardware and software.

Associated with the present invention is a proprietary, subscription information access service (IAS). The IAS creates and maintains multiple SIRViSs, each custom-designed to retrieve and display information on a specific subject. Each SIRViS maintains knowledge of the locations of one or more particular databases on its associated subject in one or more particular content servers 2. A user of the client system 1 subscribes to the IAS to receive at least one SIRViS for accessing information on the remote content servers 2. Accordingly, the IAS maintains one or more server computer systems ("IAS server") 4 connected to the Internet. One or more appropriate SIRViS can be downloaded to the client system 1 from the IAS server 4 via the Internet 3. The client system 1 may also have a direct (e.g., dial-up) connection to the IAS server 4, through which a SIRViS can be downloaded to the client system 1. Alternatively, one or more SIRViS can be loaded into the client system 1 from a portable storage medium, such as a magnetic disk or tape, a magneto-optical (MO) storage device, or any of various types of optical storage media, such as Digital Versatile Disk (DVD) or compact disk ROM (CD-ROM).

Which particular SIRViSs are loaded into the client system 1 depends on which topics interest the users of the client system 1. The users' interests may be determined in any of various ways, a discussion of which is not necessary for purposes of practicing the present invention. After each SIRViS is loaded into the client system 1, each SIRViS independently executes on the client system 1 to provide the local users with access to information stored on the content severs 2, in a manner which will be described.

Page 30 of 239

Note that each of the computer systems shown in Figure 1 may represent a number of interconnected computer systems. For example, although the IAS server 4 is shown as a single computer system, it may actually comprise multiple computer systems, which may be connected to each other on a local area network (LAN) coupled to the Internet 3, or which may be geographically separated and connected to the Internet 3 at different locations. Similarly, the client system 1 or any of the content servers 2 may represent multiple computer systems connected to each other on a LAN, corporate intranet, or the like.

Figure 2 illustrates, in block diagram form, a computer system architecture that is representative of any of the computer systems shown in Figure 1. The system shown in Figure 2 represents a conventional personal computer (PC). Note, however, that many other architectures and types of systems may be employed without departing from the scope of the present invention. Any of the computer systems represented in Figure 1 may be a less conventional type of computer system. For example, the client system 1 may be a "set-top box" type of processing system that uses a standard television set as a display device.

The computer system of Figure 2 includes a central processing unit (CPU) 10, random access memory (RAM) 11, read-only memory (ROM) 12, each connected to a bus system 18. The bus system 18 in Figure 2 may represent one or more buses connected to each other through various bridges, controllers and/or adapters, such as are well-known in the art. For example, the bus system 18 may include a system bus which connects CPU 10 to RAM 11 and which is connected through an adapter to one or more expansion buses, such as a Peripheral Component Interconnect (PCI) bus. Also coupled to the bus system

18 are a mass storage device 13, a keyboard 14, a pointing device 15, a data communication device 16, and a display device 17.

The pointing device 15 may be any suitable device for enabling a user to position a cursor or pointer on the display device 17, such as a mouse, trackball, touchpad, stylus with light pen, or the like. The display device 17 may be any suitable device for displaying alphanumeric, graphical and/or video data to a user, such as a cathode ray tube (CRT), a liquid crystal display (LCD), or the like. Mass storage device 17 may be any suitable device for storing large volumes of data, such as a magnetic disk or tape, an MO storage device, or any of various types of optical storage media, such as DVD, CD-ROM, etc. Data communication device 19 may be any device suitable for or enabling the computer system to communicate data with a remote computer system over communication link 5, such as a conventional telephone modem, a cable television modem, an Integrated Services Digital Network (ISDN) adapter, a Digital Subscriber Line (xDSL) adapter, or the like.

The elements shown in Figure 2 perform their conventional functions known in the art. In particular, mass storage 13 is used to provide non-volatile storage of software instructions and data, whereas RAM 11 is a system memory for providing temporary storage of the data and the software instructions when executed by the CPU 10. Software instructions for implementing the SIRViS and other aspects of the present invention may be downloaded to mass storage device 13 and/or RAM 11 from a remote server via the network connection 5.

Figure 3 illustrates an embodiment of the SIRViS of the present invention. As noted, the SIRViS may be embodied as software executing on the client system 1. Hence, in Figure 3, SIRViS 22 is shown as stored within a memory 20

//

in the client system 1. Memory 20 may represent RAM 11 or mass storage device 13 in Figure 3, for example, or a combination of those elements. Note that while various functions are attributed in this description to the SIRViS and its components, in the case of a software embodiment, it is actually the execution by a processor (e.g.,CPU 10) of software instructions representing the SIRViS and its components which causes the described functions to occur.

The SIRViS 22 includes a GUI 24 and a search agent 25 configured to cooperate with each other. The GUI 24 includes a control panel component 26 and a content viewer component 27. The control panel 26 allows each user of the client system 1 to create his own unique set of configurations, or search rules, which are stored within the client system 1. Thus, each member of a family having a home PC, for example, can define his or her own set of search rules for accessing information on a particular subject area. The control panel 26 may also provide various other functions for allowing a user to control and maintain the SIRViS 22. The control panel 26 interacts with users via dialog boxes and other features associated with conventional windows-based environments. These features may be manipulated by the user using well-known techniques, such as the manual positioning of a pointer or cursor on a display device using a mouse, trackball, touchpad, or other pointing device.

In alternative embodiments, search rules may not be specified explicitly by a user. Instead, search rules may be generated automatically based on observations of the users's actions, such as which types of on-line information the user accesses most frequently. In that case, such observation and/or rule generation functions may be performed by the control panel 26, by a dedicated

rule generation component within the SIRViS, or by an entity separate from the SIRViS 22.

The search agent 25 is a search engine which separately uses each set of search rules to access information on a predefined subject area in one or more remote databases 34. The remote databases 34 are stored in one or more of the remote content servers 2 (see Figure 1). The search agent 25 may access the remote databases 34 at regular, predefined intervals or at pre-specified days or times. The agent 25 stores the retrieved information in a local database 30. In doing so, the search agent 25 creates an association in the local database 30 between stored groups of information and the corresponding set of search rules used to retrieve the groups of information, thereby associating information with particular users.

The search agent is generally described herein as residing on the client system 1. Note, however, that in alternative embodiments of the present invention, the search agent 25 may be located remotely from the client system 1 and/or separate from the GUI 24. For example, the search agent 25 might be local to a remote database 34 and therefore might reside in one of the remote content servers 2. In that case, communication between the search agent 25 and the GUI 24 may take place over the Internet 3.

The local database 30 is a structured database (e.g., relational, object oriented, etc.), which allows structured, field-based queries, such as in a structured query language (SQL) database (as opposed to text searches). The local database 30 may be located within the client system 1, as shown in Figure 3, although that is not necessarily the case. However, the local database 30 is much "closer" to the client system 1 in terms of data access time than are the remote

13

databases 34. The local database 30 may be stored in a mass storage device, such as mass storage device 13 in Figure 2.

When a user wishes to view the retrieved data for the defined subject area, the user invokes the content viewer 27, which accesses the information from the local database 30 and displays it to the user. The content viewer 27 provides a conventional windows-based environment to interact with the user. In certain embodiments, the content viewer 27 may provide an environment in which the user identifies himself or is automatically identified by the client system 1, and the user, from the point of identification, is presented with, or is only allowed access to, content collected based on his or her own set of search rules for the given subject area.

Hence, each SIRViS 22 is custom designed to retrieve and display to a user information relating to a particular subject area. Accordingly, the control panel 26, agent 25, and content viewer 27 are specifically designed to access a specific class of information stored according to a particular, predefined structure. Specifically, the control panel 26 is custom designed to enable multiple users to each specify their own set of search rules for the particular subject area. The agent 25 is designed to use these sets of search rules to retrieve a specific type of information from the predefined remote databases 34 and to store that information in the local database 30 using the same data structure in which the data is stored in the remote databases 34. The agent 25 therefore maintains knowledge of which remote databases to search. Such knowledge may be in the form of a simple stored list of paths to one or more data files. The content viewer 27 is designed to have knowledge of this data structure and to retrieve the information from the local database 30 accordingly. The content viewer 27 is

further designed to retrieve stored information associated with a particular user (i.e., information retrieved using a particular set of search rules).

Referring now to Figure 4, when a user invokes the SIRViS 22 for the first time after it is loaded into the client system 1, the user accesses the control panel 26 to define his set of search rules for the relevant subject area. The control panel 26, therefore, maintains a dataset 40 containing the search rules for all of the authorized users of the client system 1. The agent 25 accesses the dataset 40, selects the set of rules for a particular user, retrieves information from the remote database 34, and stores the information within the local database 30, including associating the retrieved information with a particular user (or set of search rules). In one embodiment, the agent 25 searches the remote database 34 on behalf of one or more users regardless of whether the client system 1 is currently in use by any user; hence, searches are generally performed automatically. Searches may be performed periodically or at specified days or times. However, it is also contemplated that the agent 25 may initiate a search of the remote databases 34 directly in response to a user request.

The client system 1 may include more than one SIRViS, each of which relates to a different subject area. Thus, as shown in Figure 5, the client system 1 may include a number of individual SIRViSs, 22-1, 22-2, . . ., 22-N, each of which relates to a particular subject area. Each of the SIRViSs 22-1 through 22-N is configured to access data from a particular group of remote databases 34-1, 34-2, . . ., 34-N, respectively, and to store that information in the local database 30. If desired, multiple local databases may be used, such as one for each SIRViS.

Because information is retrieved by the SIRViS automatically and stored in the local database, the speed at which a user can access and view this

information is improved in comparison with conventional technologies. Moreover, because each SIRViS is customized to retrieve information for a particular subject area and to retain the structure in which that information is stored, the information is stored in the local database in a far more organized manner than with conventional information retrieval tools. The present invention, therefore, allows a user to access information on a given topic much more quickly and easily than with conventional information access tools.

In addition to the functions described above, a SIRViS may include the capability to automatically update itself in order to identify newly available remote databases or to provide improved functionality. Thus, referring to Figure 6, a SIRViS 22b according to one embodiment includes an update unit 44, in addition to the components mentioned above. The update unit 44 causes the SIRViS 22b to automatically update itself when an updated version is available, such as when the list of remote databases has been updated or when the program code has been improved. When a more updated version of the SIRViS is available, the update unit 44 automatically causes the update to be downloaded to the client system 1 from a remote server. The update unit 44 may automatically query the IAS server 4 to determine if an update is available, or it may simply wait for a message from the IAS server 4 indicating that an update is available. Updating the SIRViS 22b may entail replacing or modifying the entire SIRViS 22b or particular components of the SIRViS 22b, such as the agent 25, the control panel 26, and/or the content viewer 27.

A SIRViS of the present invention may also include the capability to record accesses by a given user to particular pieces of content stored in a local database, and to report these accesses, either in real-time or in batch mode, to

some remote database, such as the system server 4, or one of the content servers 2. This information may be used by the IAS or third parties to maintain user profiles. Accordingly, as shown in Figure 6, the SIRViS 22b of the present invention includes a reporting unit 42 for performing these recording and reporting functions. Note that while the reporting unit 42 and the update unit 44 are shown as components of the SIRViS 22b, alternatively they may be provided as separate entities which function independently of the SIRViS 22b.

Thus, an agent based on-line information retrieval and viewing system has been described. Although the present invention has been described with reference to specific exemplary embodiments, it will be evident that various modifications and changes may be made to these embodiments without departing from the broader spirit and scope of the invention as set forth in the claims. Accordingly, the specification and drawings are to be regarded in an illustrative sense rather than a restrictive sense.

CLAIMS

What is claimed is:

1. A device for providing a plurality of local users with information stored remotely on a network, the device comprising:

a rule generation unit configured to define, for each of the plurality of local users, a set of search rules applicable to a predefined subject; and

a search agent configured to retrieve information on only the predefined subject from a database on the network based on each set of search rules and to store the retrieved information in a local database.

2. A device according to claim 1, further comprising a user interface configured to enable each of the plurality of local users to access, from the local database, the information on the predefined subject associated with the corresponding set of search criteria.

3. A device according to claim 1, wherein the search agent is further configured to create an association in the local database between the retrieved information and particular ones of the local users based on the set of search rules used to retrieve the information.

18

4. A device according to claim 1, wherein the information is stored in the remote database according to a structure, and wherein the agent is further configured to store the information in the local database according to said structure.

5. A processing system for providing a plurality of local users with information stored remotely over a network, the system comprising:

a first user interface for enabling each of a plurality of local users to define a different corresponding set of search rules applicable to a predefined subject;

a search agent configured to receive each set of search rules and to automatically retrieve information on only the predefined subject from a database on the network based on each set of search rules and to store the retrieved information in a local database; and

a second user interface for enabling each of the plurality of local users to access from the local database a portion of the information on the predefined subject associated with the corresponding set of search rules.

6. A processing system according to claim 5, wherein the information stored in the remote database comprises a plurality of records, each of the records having a structure, and wherein the agent stores the information in the local database in the form of records having said structure.

7. A processing system according to claim 5, further comprising an update unit for periodically determining whether an updated version of the search agent is available from a remote database and, if an updated version is available, for retrieving the updated version.

8. A processing system according to claim 5, further comprising an update unit for periodically determining whether an updated version of any of the search agent, the first user interface, or the second user interface is available from a remote database and, if an updated version is available, for retrieving the updated version.

9. A processing system according to claim 5, further comprising a reporting unit for automatically reporting, to a remote computer system, accesses to the local database.

10. A processing system according to claim 9, the reporting unit further for reporting accesses to particular types of content in the local database.

11. A processing system according to claim 9, the reporting unit further for reporting accesses to the local database by a particular user.

12. A processing system according to claim 5, the second user interface comprising:

means for receiving user inputs identifying one of the local users; and means for retrieving from the local database only a portion of the information on the predefined subject, the portion corresponding to the set of search rules associated with said one of the local users; and

means for outputting the portion of the information.

13. A local computer system connected to a plurality of remote computer systems on a network, the local computer system comprising:

a plurality of user interface units configured to receive user inputs, each user interface unit associated with a different one of a plurality of subject areas, each user interface unit further configured to receive, from each of a plurality of users, a separate set of search rules relating to the associated subject area;

a plurality of agents, each agent associated with one of the subject areas, each agent configured to retrieve information related to the associated subject area from at least one of the remote computer systems based on at least one specified set of search rules and to store the retrieved information in a local database; and

a plurality of viewing units, each viewing unit configured to retrieve information from the local database corresponding to one of the subject areas in

21

response to inputs from any of the plurality of users and to display the retrieved information.

14. A local processing system according to claim 13, wherein each of the viewing units is further configured to receive user inputs identifying one of the users and to retrieve from the local database information corresponding to the set of search rules associated with said one of the users.

15. A local processing system according to claim 13, further comprising a reporting unit for reporting accesses to the local database to a remote computer system.

16. A local processing system according to claim 13, wherein the information is stored in each of the remote computer systems according to a structure, and wherein the agent maintains each said structure when storing the information in the local database.

17. A local processing system according to claim 13, further comprising an update unit configured to periodically determine whether an updated version of the search agent is available from a remote database and, if an updated version is available, to retrieve the updated version.

22

18. A local processing system according to claim 13, further comprising a reporting unit configured to report accesses to the local database to a remote computer system.

19. A local processing system according to claim 13, wherein the network is a wide area network.

20. A method of providing a plurality of local users with information stored remotely on a network, the method comprising:

for each of the plurality of local users, generating a unique set of search criteria relating to a single, predefined subject;

retrieving information relating to only the predefined subject from a database on the network based on each set of search criteria; and

storing the retrieved information in a local database accessible to the plurality of local users.

21. A method according to claim 20, wherein said storing comprises creating an association in the local database between the retrieved information and particular ones of the local users based on the set of search criteria used to retrieve the information.

22. A method according to claim 20, further comprising:

receiving a query, the query including information identifying one of the local users; and

retrieving from the local database only a portion of the information on the predefined subject, the portion corresponding to the set of search criteria associated with said one of the local users; and

outputting the portion of the information.

23. A method according to claim 20, wherein said generating comprises inputting each set of search criteria at one processing system on the network, the network comprising a plurality of processing systems.

24. A method according to claim 23, wherein said outputting comprises outputting the portion of the information from said one processing system.

25. A method according to claim 20, wherein the information is stored in the remote database according to a structure, and wherein storing the retrieved information in a local database comprise storing the information in the local database using the same structure in which said information was stored in the remote database.

24

26. A method according to claim 20, further comprising reporting accesses to the local database to a remote computer system.

27. A method according to claim 26, wherein said reporting accesses comprises reporting accesses to particular types of content in the local database.

28. A method according to claim 26, wherein said reporting accesses comprises reporting accesses to the local database by a particular user.

29. A method of providing a plurality of local users with information stored remotely over a network, the method comprising:

using a computer system on the network to receive a set of user inputs from each of the plurality local users, each set of user inputs for creating a set of search rules for the corresponding local user for a predefined subject;

retrieving information relating to only the predefined subject from a remote database on the network;

storing the retrieved information on the predefined subject in a local database;

receiving a set of user inputs from one of the local users; and

responding to the set of user inputs by retrieving from the local database a portion of the information on the predefined subject, the portion corresponding to the set of search rules associated with said one of the local users, and by outputting the information to said one of the local users.

30. A method according to claim 29, wherein receiving the set of user inputs from said one of the local users comprises using the computer system to receive the set of user inputs from said one of the local users; and wherein outputting the information to said one of the local users comprises using the computer system to output the information to said one of the local users.

31. A method according to claim 29, wherein the information is stored in the remote database according to a structure, and wherein storing the retrieved information in a local database comprise storing the information in the local database using the same structure in which said information was stored in the remote database.

Add A1

Attorney's Docket No.: 03359.P004 Patent

DECLARATION AND POWER OF ATTORNEY FOR PATENT APPLICATION

As a below named inventor, I hereby declare that:

My residence, post office address and citizenship are as stated below, next to my name.

I believe I am the original, first, and sole inventor (if only one name is listed below) or an original, first, and joint inventor (if plural names are listed below) of the subject matter which is claimed and for which a patent is sought on the invention entitled

Agent-Based On-Line Information Retrieval and Viewing System

the specification of which

XX is attached hereto.
___ was filed on _____ as
United States Application Number _____
or PCT International Application Number _____
and was amended on _____.
(if applicable)

I hereby state that I have reviewed and understand the contents of the above-identified specification, including the claim(s), as amended by any amendment referred to above. I do not know and do not believe that the claimed invention was ever known or used in the United States of America before my invention thereof, or patented or described in any printed publication in any country before my invention thereof or more than one year prior to this application, that the same was not in public use or on sale in the United States of America more than one year prior to this application, and that the invention has not been patented or made the subject of an inventor's certificate issued before the date of this application in any country foreign to the United States of America on an application filed by me or my legal representatives or assigns more than twelve months (for a utility patent application) or six months (for a design patent application) prior to this application.

I acknowledge the duty to disclose all information known to me to be material to patentability as defined in Title 37, Code of Federal Regulations, Section 1.56.

I hereby claim foreign priority benefits under Title 35, United States Code, Section 119(a)-(d), of any foreign application(s) for patent or inventor's certificate listed below and have also identified below any foreign application for patent or inventor's certificate having a filing date before that of the application on which priority is claimed:

Prior Foreign Application(s)			Priority Claimed	
(Number)	(Country)	(Day/Month/Year Filed)	Yes	No
(Number)	(Country)	(Day/Month/Year Filed)	Yes	No
(Number)	(Country)	(Day/Month/Year Filed)	Yes	No

I hereby claim the benefit under title 35, United States Code, Section 119(e) of any United States provisional application(s) listed below

(Application Number)	Filing Date
(Application Number)	Filing Date

I hereby claim the benefit under Title 35, United States Code, Section 120 of any United States application(s) listed below and, insofar as the subject matter of each of the claims of this application is not disclosed in the prior United States application in the manner provided by the first paragraph of Title 35, United States Code, Section 112, I acknowledge the duty to disclose all information known to me to be material to patentability as defined in Title 37, Code of Federal Regulations, Section 1.56 which became available between the filing date of the prior application and the national or PCT international filing date of this application:

(Application Number)	Filing Date	(Status -- patented, pending, abandoned)
(Application Number)	Filing Date	(Status -- patented, pending, abandoned)

I hereby appoint Farzad E. Amini, Reg. No. P42,261; Aloysius T. C. AuYeung, Reg. No. 35,432; William Thomas Babbitt, Reg. No. 39,591; Jordan Michael Becker, Reg. No. 39,602; Bradley J. Bereznak, Reg. No. 33,474; Michael A. Bernadicou, Reg. No. 35,934; Roger W. Blakely, Jr., Reg. No. 25,831; Gregory D. Caldwell, Reg. No. 39,926; Kent M. Chen, Reg. No. 39,630; Lawrence M. Cho, Reg. No. 39,942; Thomas M. Coester, Reg. No. 39,637; Roland B. Cortes, Reg. No. 39,152; Barbara Bokanov Courtney, Reg. No. P42,442; William Donald Davis, Reg. No. 38,428; Michael Anthony DeSanctis, Reg. No. 39,957; Daniel M. De Vos, Reg. No. 37,813; Tarek N. Fahmi, Reg. No. 41,402; Richard Leon Gregory, Jr., P42,607; James Y. Go, Reg. No. 40,621; Sharmini Nathan Green, Reg. No. 41,410; David R. Halvorson, Reg. No. 33,395; Thomas A. Hassing, Reg. No. 36,159; Eric Ho, Reg. No. 39,711; George W Hoover II, Reg. No. 32,992; Eric S. Hyman, Reg. No. 30,139; Dag H. Johansen, Reg. No. 36,172; Stephen L. King, Reg. No. 19,180; Michael J. Mallie, Reg. No. 36,591; Paul A. Mendonsa, Reg. No. P42,879; Darren J. Milliken, P42,004; Thinh V. Nguyen, P42,034; Kimberley G. Nobles, Reg. No. 38,255; Michael A. Proksch, Reg. No. P43,021; Ronald W. Reagin, Reg. No. 20,340; Babak Redjaian, P42,096; James H. Salter, Reg. No. 35,668; William W. Schaal, Reg. No. 39,018; James C. Scheller, Reg. No. 31,195; Anand Sethuraman, Reg. No. P43,351; Charles E. Shemwell, Reg. No. 40,171; Maria McCormack Sobrino, Reg. No. 31,639; Stanley W. Sokoloff, Reg. No. 25,128; Allan T. Sponseller, Reg. No. 38,318; Steven R. Sponseller, Reg. No. 39,384; Geoffrey T. Staniford, P43,151; Judith A. Szepesi, Reg. No. 39,393; Edwin H. Taylor, Reg. No. 25,129; George G. C. Tseng, Reg. No. 41,355; Lester J. Vincent, Reg. No. 31,460; John Patrick Ward, Reg. No. 40,216; Ben J. Yorks, Reg. No. 33,609; and Norman Zafman, Reg. No. 26,250; my attorneys; and Robert Andrew Diehl, Reg. No. 40,992; and Edwin A. Sloane, Reg. No. 34,728; my patent agents, of BLAKELY, SOKOLOFF, TAYLOR & ZAFMAN LLP, with offices located at 12400 Wilshire Boulevard, 7th Floor, Los Angeles, California 90025, telephone (310) 207-3800, and James R. Thein, Reg. No. 31,710, my patent attorney; with full power of substitution and revocation, to prosecute this application and to transact all business in the Patent and Trademark Office connected herewith.

I hereby declare that all statements made herein of my own knowledge are true and that all statements made on information and belief are believed to be true; and further that these statements were made with the knowledge that willful false statements and the like so made are punishable by fine or imprisonment, or both, under Section 1001 of Title 18 of the United States Code and that such willful false statements may jeopardize the validity of the application or any patent issued thereon.

Full Name of Sole/First Inventor Henry R. Williams, Jr.

Inventor's Signature _____ Date _____

Residence Palisades, New Jersey (City, State) Citizenship U.S.A. (Country)

Post Office Address 11 Broadway, Third Floor
New York, New York 10004

Title 37, Code of Federal Regulations, Section 1.56
Duty to Disclose Information Material to Patentability

(a) A patent by its very nature is affected with a public interest. The public interest is best served, and the most effective patent examination occurs when, at the time an application is being examined, the Office is aware of and evaluates the teachings of all information material to patentability. Each individual associated with the filing and prosecution of a patent application has a duty of candor and good faith in dealing with the Office, which includes a duty to disclose to the Office all information known to that individual to be material to patentability as defined in this section. The duty to disclosure information exists with respect to each pending claim until the claim is cancelled or withdrawn from consideration, or the application becomes abandoned. Information material to the patentability of a claim that is cancelled or withdrawn from consideration need not be submitted if the information is not material to the patentability of any claim remaining under consideration in the application. There is no duty to submit information which is not material to the patentability of any existing claim. The duty to disclosure all information known to be material to patentability is deemed to be satisfied if all information known to be material to patentability of any claim issued in a patent was cited by the Office or submitted to the Office in the manner prescribed by §§1.97(b)-(d) and 1.98. However, no patent will be granted on an application in connection with which fraud on the Office was practiced or attempted or the duty of disclosure was violated through bad faith or intentional misconduct. The Office encourages applicants to carefully examine:

(1) Prior art cited in search reports of a foreign patent office in a counterpart application, and

(2) The closest information over which individuals associated with the filing or prosecution of a patent application believe any pending claim patentably defines, to make sure that any material information contained therein is disclosed to the Office.

(b) Under this section, information is material to patentability when it is not cumulative to information already of record or being made or record in the application, and

(1) It establishes, by itself or in combination with other information, a prima facie case of unpatentability of a claim; or

(2) It refutes, or is inconsistent with, a position the applicant takes in:

(i) Opposing an argument of unpatentability relied on by the Office, or

(ii) Asserting an argument of patentability.

A prima facie case of unpatentability is established when the information compels a conclusion that a claim is unpatentable under the preponderance of evidence, burden-of-proof standard, giving each term in the claim its broadest reasonable construction consistent with the specification, and before any consideration is given to evidence which may be submitted in an attempt to establish a contrary conclusion of patentability.

(c) Individuals associated with the filing or prosecution of a patent application within the meaning of this section are:

(1) Each inventor named in the application;

(2) Each attorney or agent who prepares or prosecutes the application; and

(3) Every other person who is substantively involved in the preparation or prosecution of the application and who is associated with the inventor, with the assignee or with anyone to whom there is an obligation to assign the application.

(d) Individuals other than the attorney, agent or inventor may comply with this section by disclosing information to the attorney, agent, or inventor.

PRINT OF DRAWINGS
AS ORIGINALLY FILED

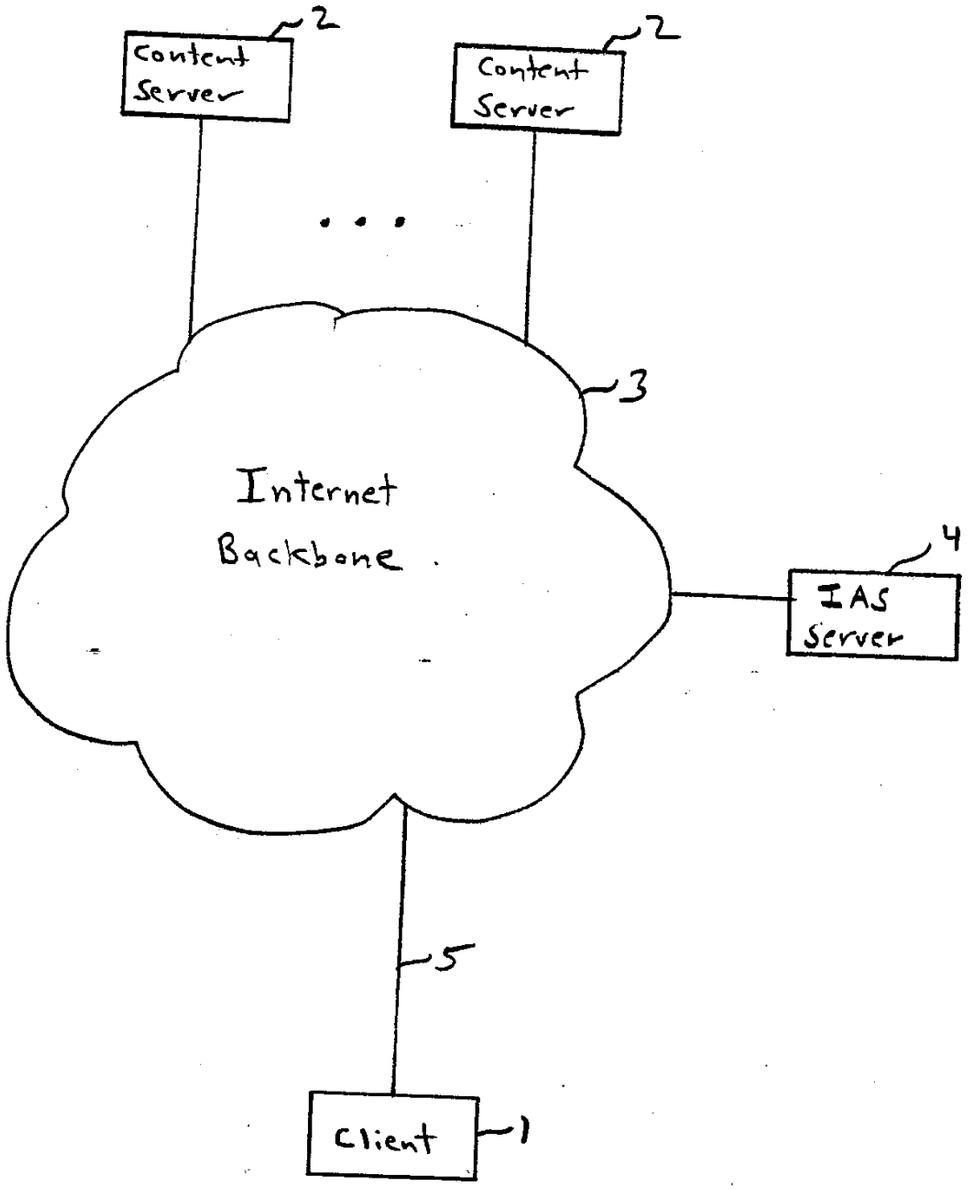

FIG. 1

PRINT OF DRAWINGS
AS ORIGINALLY FILED

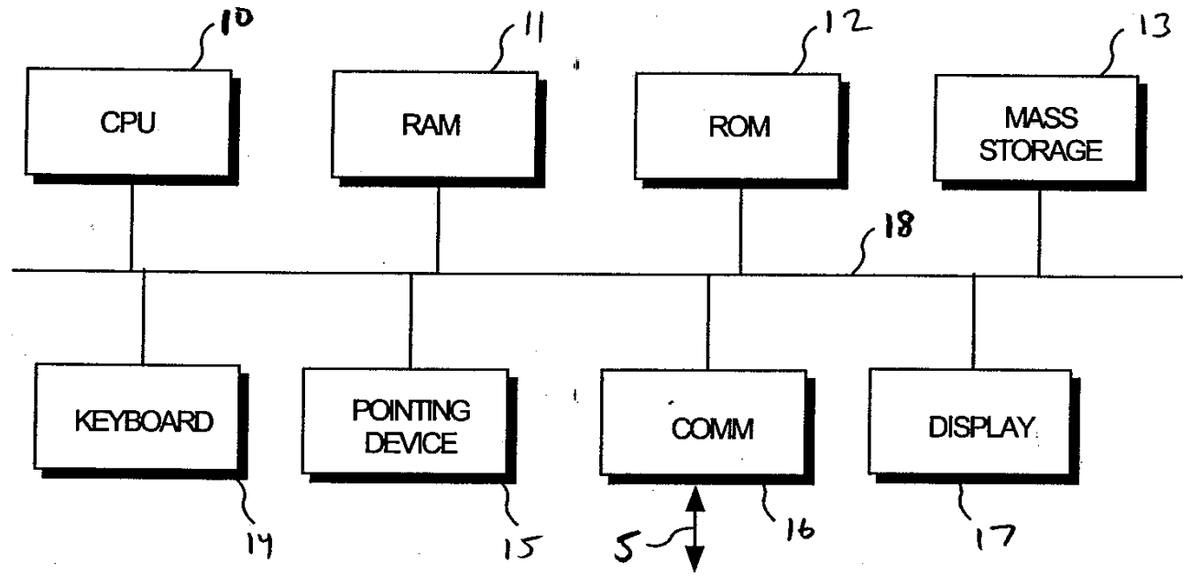

FIG. 2

PRINT OF DRAWINGS
AS ORIGINALLY FIL

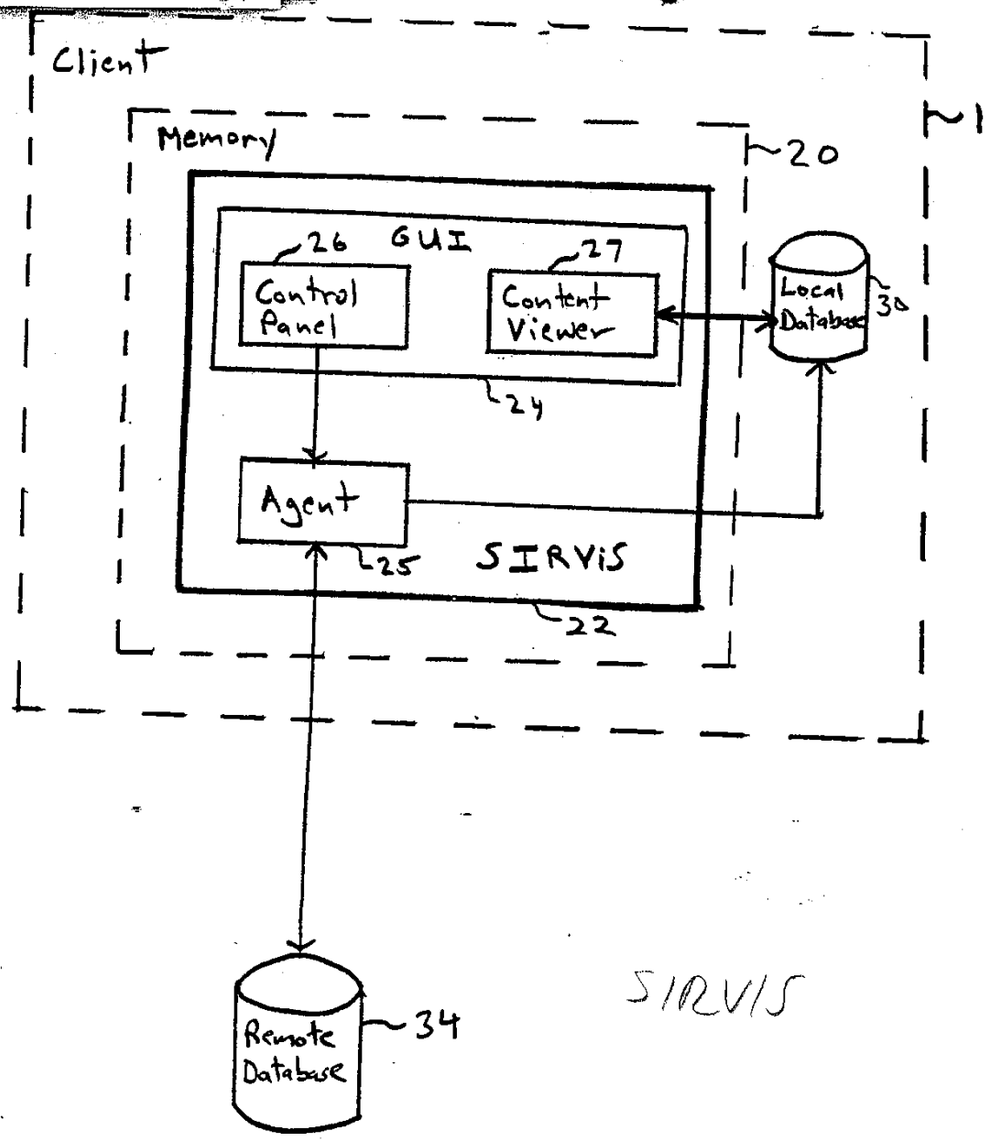

page 11 lines 20-23

"such rules may not be specified explicitely by a user. Instead, such rules may be generated automatically based on observations of the user's actions, such as which types of

FIG. 3 on-line information the user accesses most frequently.

PRINT OF DRAWINGS
AS ORIGINALLY FILED

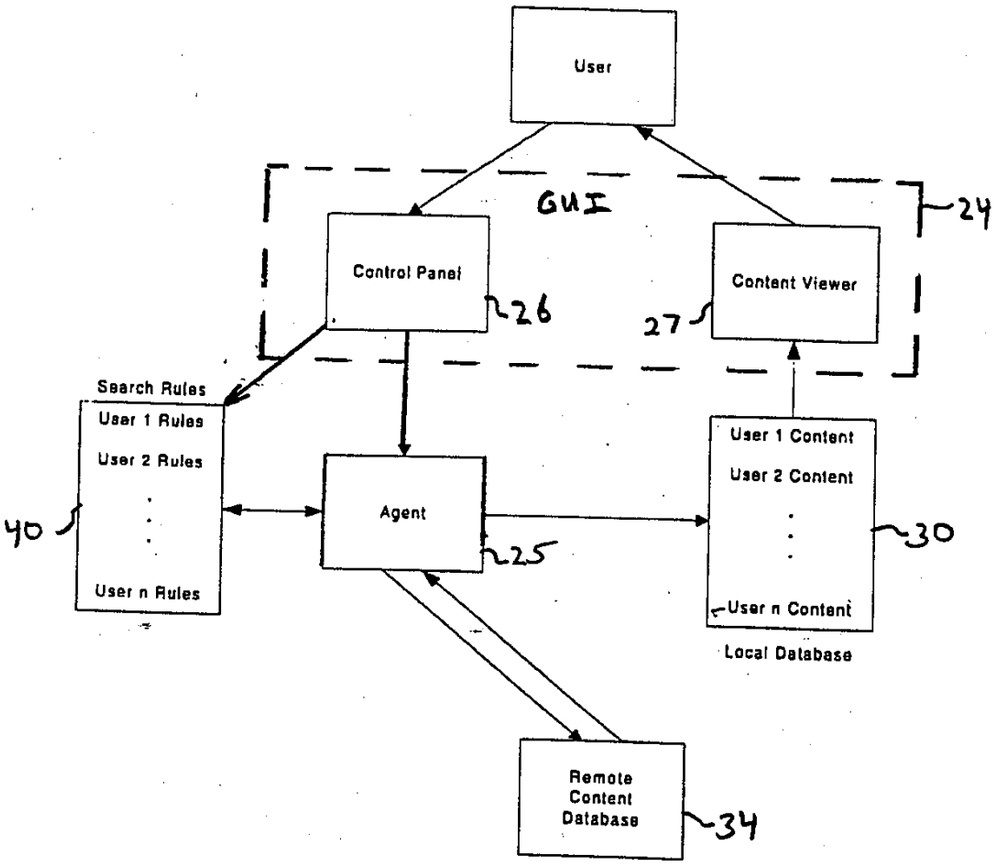

FIG. 4

PRINT OF DRAWINGS AS ORIGINALLY FILED

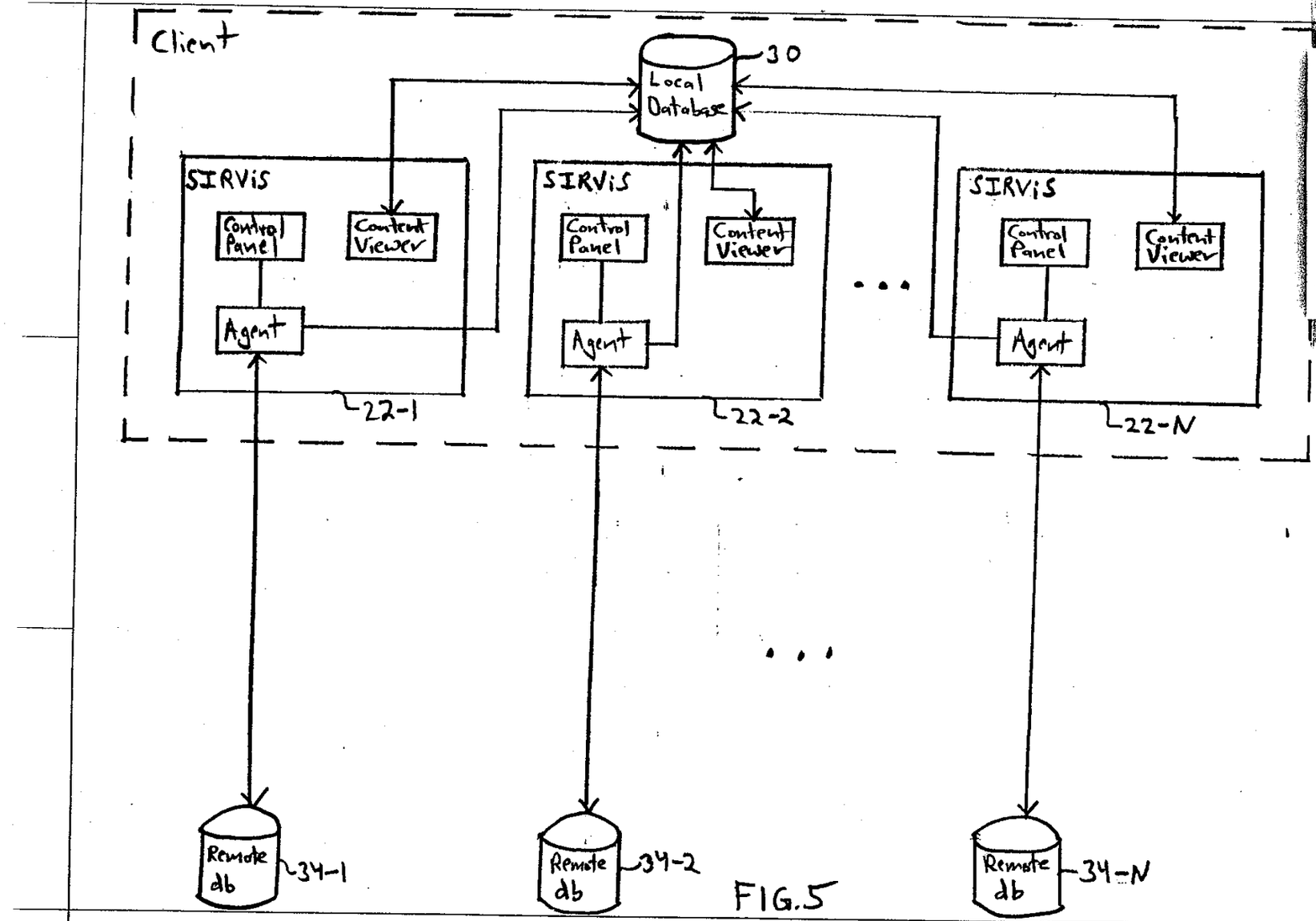

FIG.5

PRINT OF DRAWINGS
AS ORIGINALLY FIL

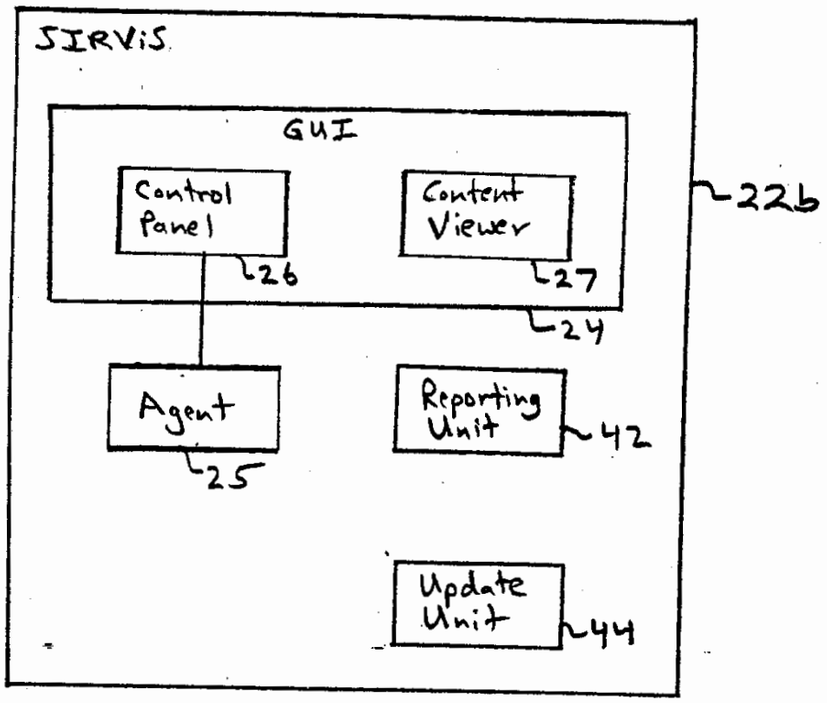

FIG. 6

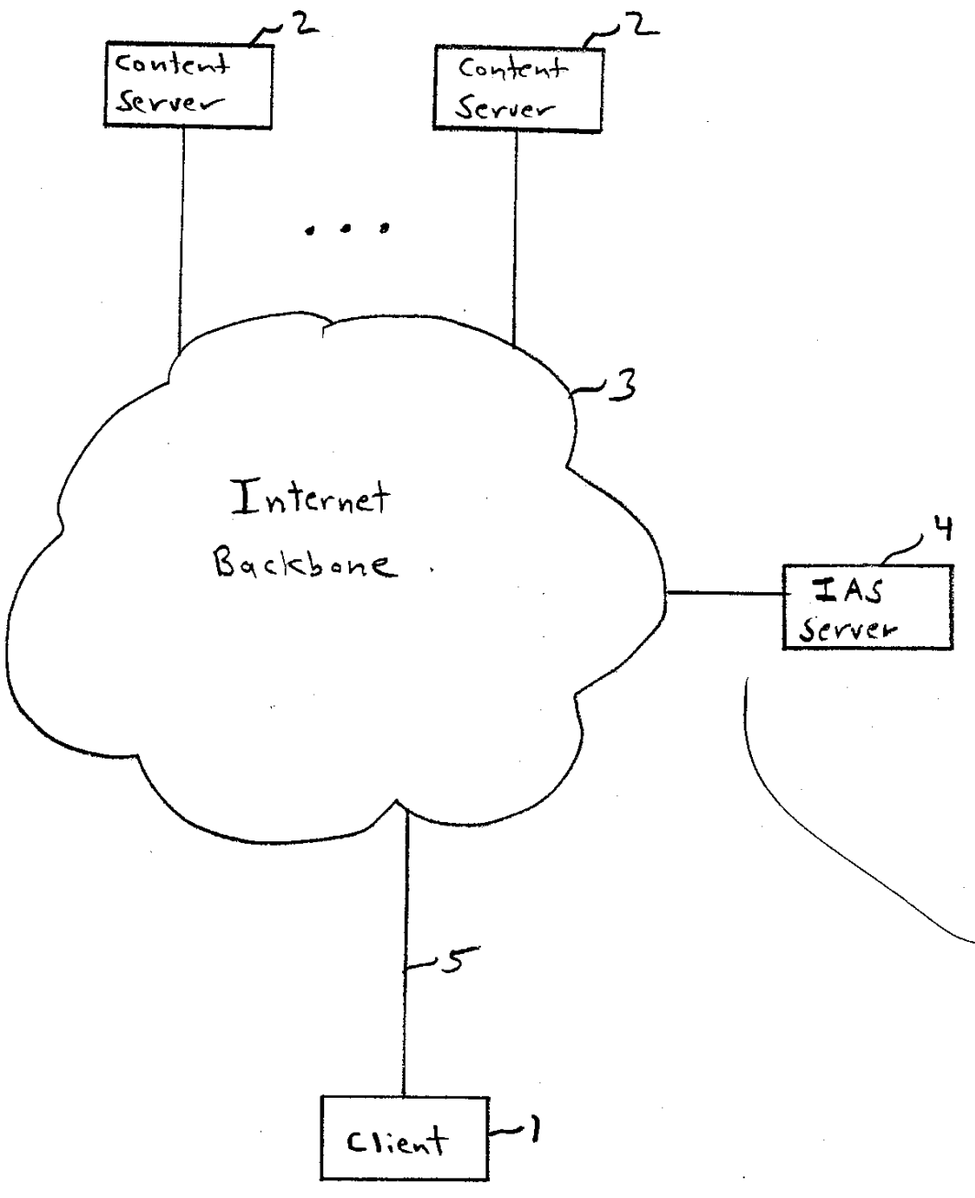
Content Server
2
Content Server
2
3
Internet Backbone
4
IAS Server
5
Client
1

FIG. 1

8620E0 "EZ4E060

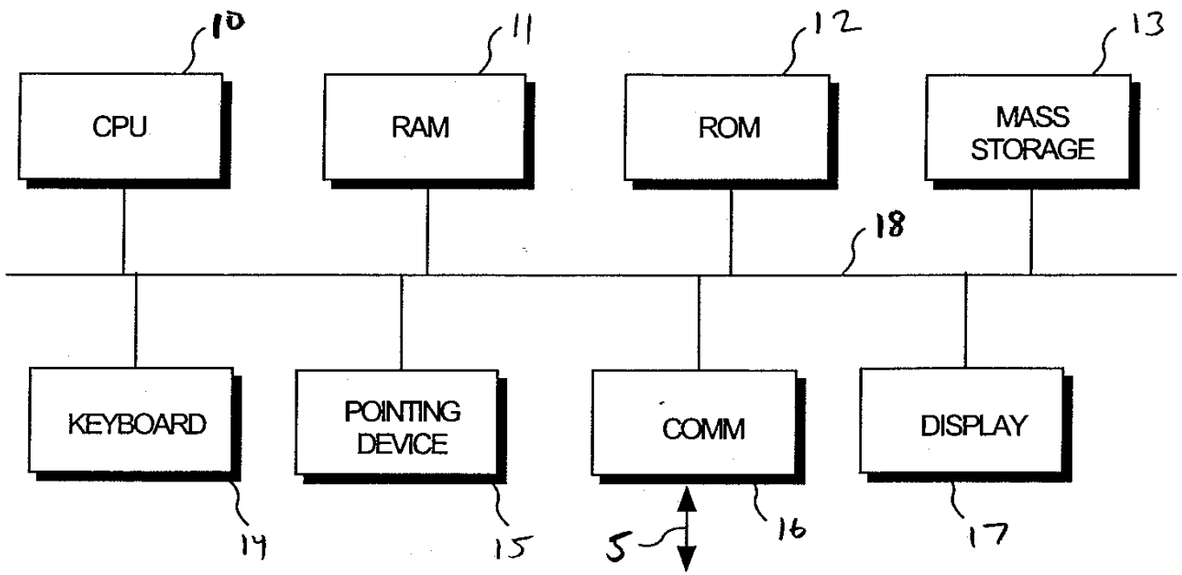

FIG. 2

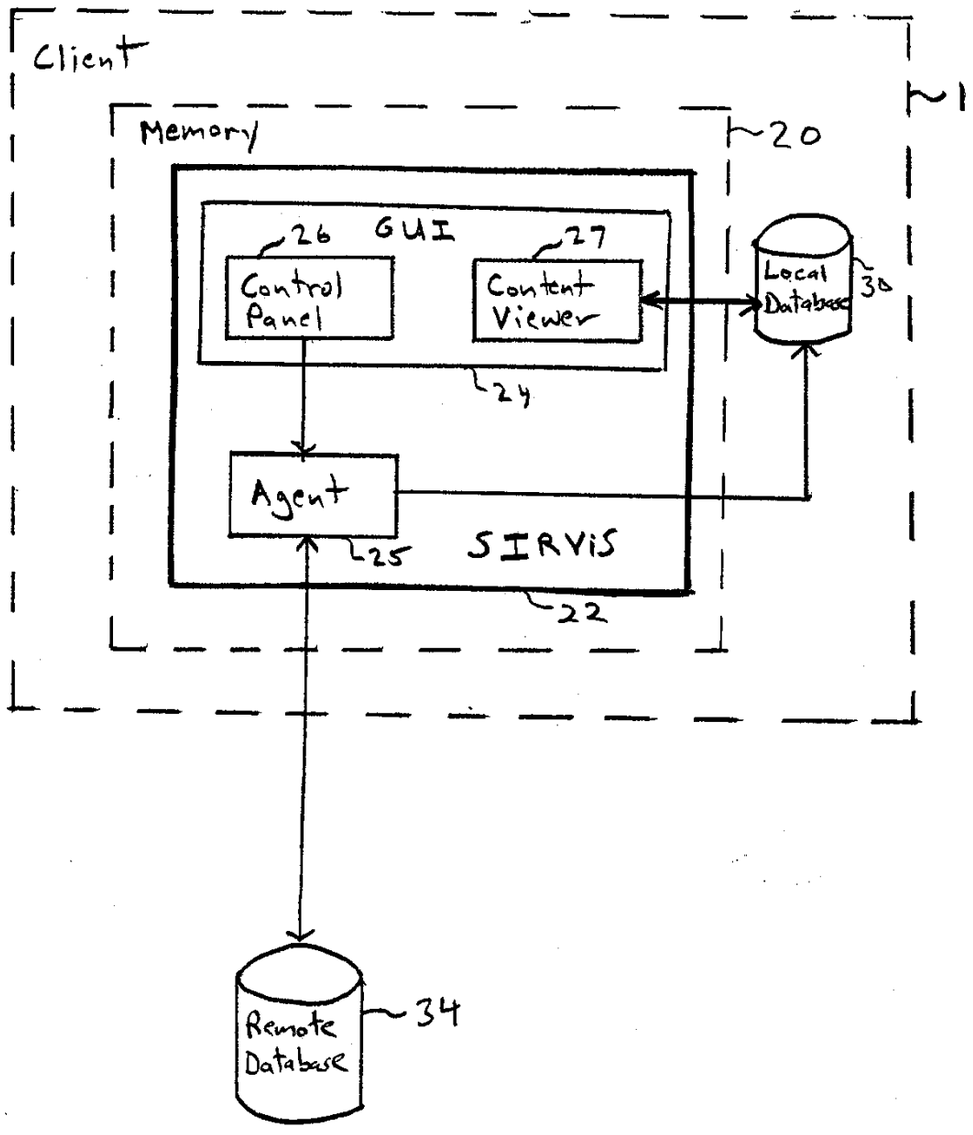
Client
1
Memory
20
26
GUI
27
Control Panel
Content Viewer
Local Database
30
24
Agent
25
SIRVIS
22
Remote Database
34

FIG. 3

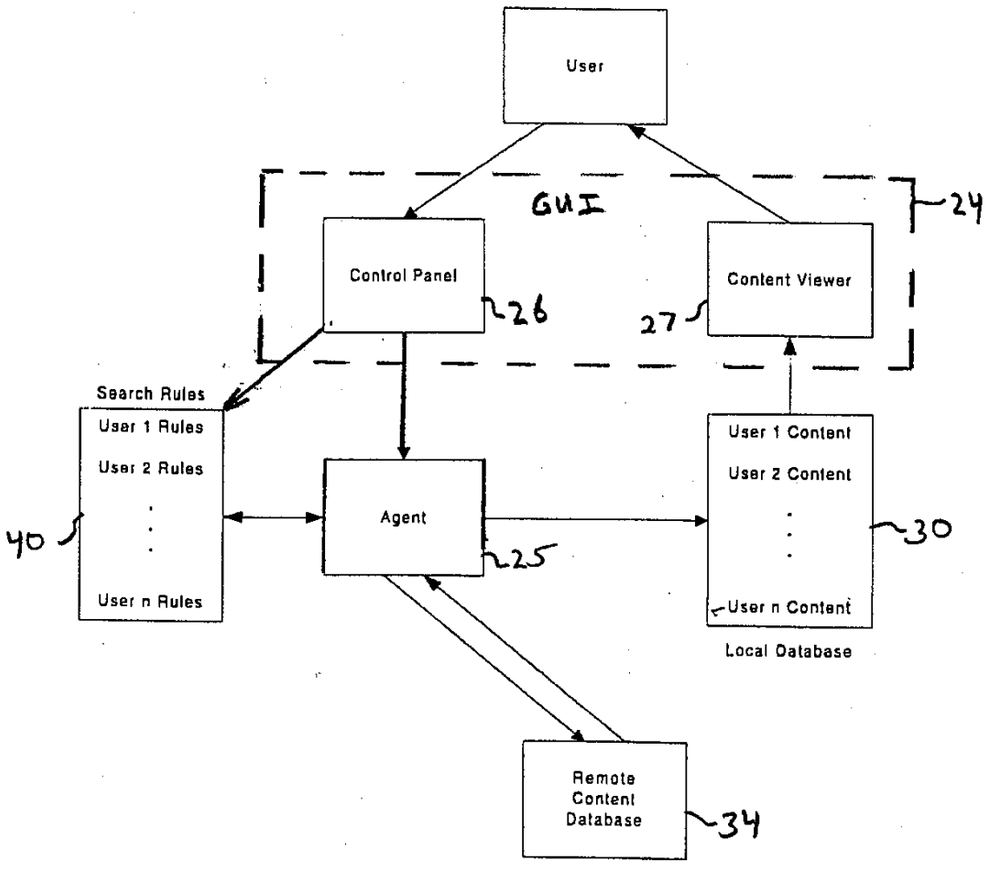
User
GUI
24
Control Panel
26
Content Viewer
27
Search Rules
User 1 Rules
User 2 Rules
User n Rules
40
Agent
25
User 1 Content
User 2 Content
User n Content
30
Local Database
Remote Content Database
34

FIG. 4

8620E0 E27hE060

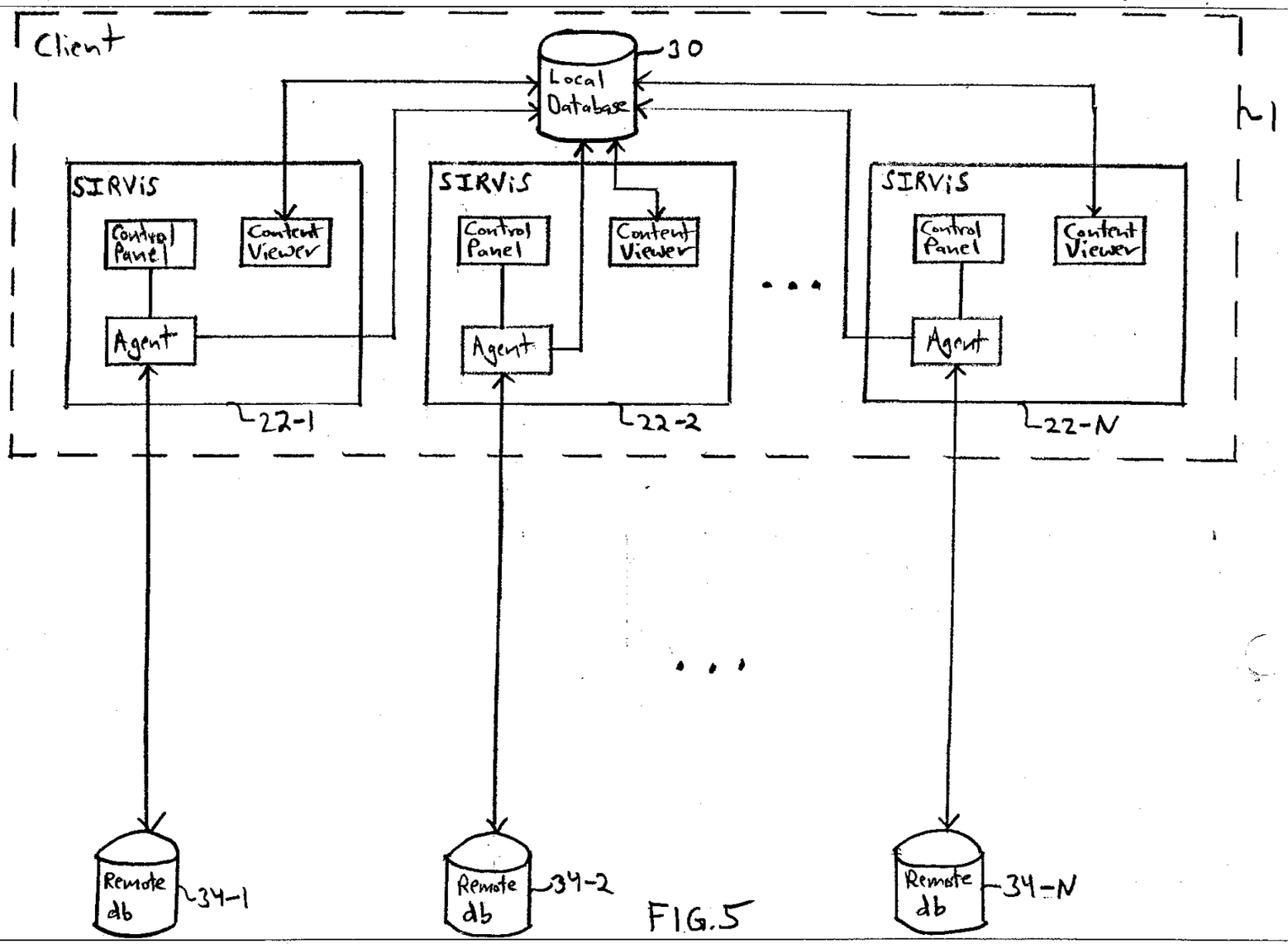

FIG.5

National Brand
42-399 200 RECYCLED WHITE 5 SQUARE
42-382 100 RECYCLED WHITE 5 SQUARE
42-389 200 SHEETS EYE-EASE® 5 SQUARE
42-382 100 SHEETS EYE-EASE® 5 SQUARE
42-361 50 SHEETS EYE-EASE® 5 SQUARE
13-782 500 SHEETS, FILLER, 5 SQUARE

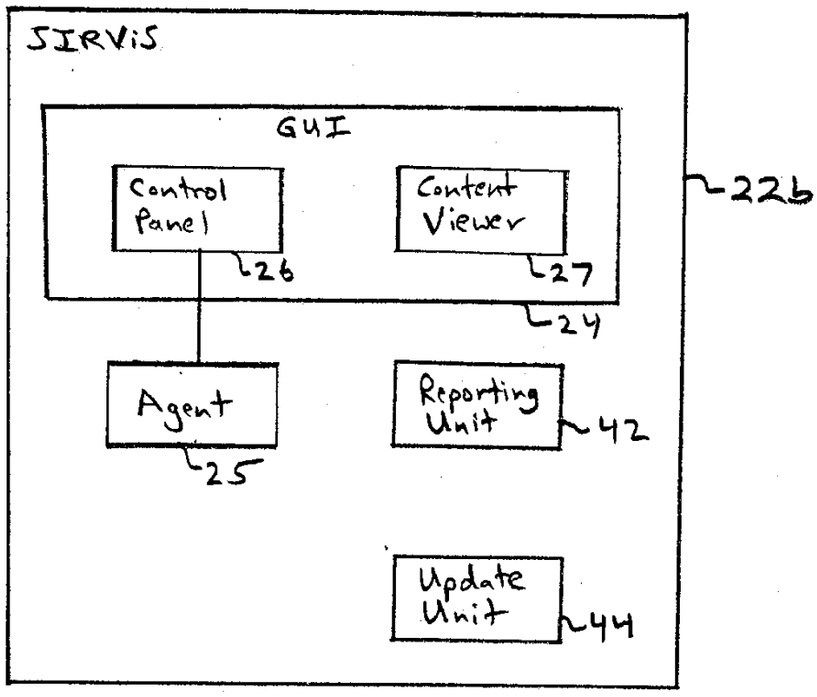
SIRViS
GUI
Control Panel
26
Content Viewer
27
24
22b
Agent
25
Reporting Unit
42
Update Unit
44

FIG. 6

PATENT APPLICATION FEE DETERMINATION RECORD

Effective October 1, 1997

Application or Docket Number: 09/034,723

CLAIMS AS FILED - PART I

FOR	(Column 1) NUMBER FILED	(Column 2) NUMBER EXTRA	SMALL ENTITY TYPE ☐ RATE	SMALL ENTITY FEE	OR	OTHER THAN SMALL ENTITY RATE	OTHER THAN SMALL ENTITY FEE
BASIC FEE				395.00	OR		790.00
TOTAL CLAIMS	31 minus 20 =	* 11	x$11=		OR	x$22=	242
INDEPENDENT CLAIMS	5 minus 3 =	* 2	x41=		OR	x82=	164
MULTIPLE DEPENDENT CLAIM PRESENT			+135=		OR	+270=	
			TOTAL		OR	TOTAL	1196

* If the difference in column 1 is less than zero, enter "0" in column 2

CLAIMS AS AMENDED - PART II

AMENDMENT A

	(Column 1) CLAIMS REMAINING AFTER AMENDMENT		(Column 2) HIGHEST NUMBER PREVIOUSLY PAID FOR	(Column 3) PRESENT EXTRA	SMALL ENTITY RATE	SMALL ENTITY ADDITIONAL FEE	OR	OTHER THAN SMALL ENTITY RATE	OTHER THAN SMALL ENTITY ADDITIONAL FEE
Total	* 33	Minus	** 31	= 2	x$11=		OR	x$22=	34
Independent	* 7	Minus	*** 5	= 2	x41=		OR	x82=	156
FIRST PRESENTATION OF MULTIPLE DEPENDENT CLAIM					+135=		OR	+270=	
					TOTAL ADDIT. FEE		OR	TOTAL ADDIT. FEE	190

AMENDMENT B

	(Column 1) CLAIMS REMAINING AFTER AMENDMENT		(Column 2) HIGHEST NUMBER PREVIOUSLY PAID FOR	(Column 3) PRESENT EXTRA	SMALL ENTITY RATE	SMALL ENTITY ADDITIONAL FEE	OR	OTHER THAN SMALL ENTITY RATE	OTHER THAN SMALL ENTITY ADDITIONAL FEE
Total	*	Minus	**	=	x$11=		OR	x$22=	
Independent	*	Minus	***	=	x41=		OR	x82=	
FIRST PRESENTATION OF MULTIPLE DEPENDENT CLAIM					+135=		OR	+270=	
					TOTAL ADDIT. FEE		OR	TOTAL ADDIT. FEE	

AMENDMENT C

	(Column 1) CLAIMS REMAINING AFTER AMENDMENT		(Column 2) HIGHEST NUMBER PREVIOUSLY PAID FOR	(Column 3) PRESENT EXTRA	SMALL ENTITY RATE	SMALL ENTITY ADDITIONAL FEE	OR	OTHER THAN SMALL ENTITY RATE	OTHER THAN SMALL ENTITY ADDITIONAL FEE
Total	*	Minus	**	=	x$11=		OR	x$22=	
Independent	*	Minus	***	=	x41=		OR	x82=	
FIRST PRESENTATION OF MULTIPLE DEPENDENT CLAIM					+135=		OR	+270=	
					TOTAL ADDIT. FEE		OR	TOTAL ADDIT. FEE	

* If the entry in column 1 is less than the entry in column 2, write "0" in column 3.
** If the "Highest Number Previously Paid For" IN THIS SPACE is less than 20, enter "20."
*** If the "Highest Number Previously Paid For" IN THIS SPACE is less than 3, enter "3."
The "Highest Number Previously Paid For" (Total or Independent) is the highest number found in the appropriate box in column 1.

FORM PTO-875 (Rev. 8/97) *U.S. Government Printing Office: 1997 - 430-571/69194 Patent and Trademark Office, U.S. DEPARTMENT OF COMMERCE

CLAIMS

	AS FILED		AFTER 1st AMENDMENT		AFTER 2nd AMENDMENT	
	IND.	DEP.	IND.	DEP.	IND.	DEP.
1	/					
2		/				
3		/				
4		/				
5	/					
6		/				
7		/				
8		/				
9		/				
10		/				
11		/				
12		/				
13	/					
14		/				
15		/				
16		/				
17		/				
18		/				
19		/				
20	/					
21		/				
22		/				
23		/				
24		/				
25		/				
26		/				
27		/				
28		/				
29	/					
30		/				
31		/				
32						
33						
34						
35						
36						
37						
38		—				
39						
40						
41						
42						
43						
44						
45						
46						
47						
48						
49						
50						
TOTAL IND.	5					
TOTAL DEP.	26					
TOTAL CLAIMS	31					

	*		*		*	
	IND.	DEP.	IND.	DEP.	IND.	DEP.
51						
52						
53						
54						
55						
56						
57						
58						
59						
60						
61						
62						
63						
64						
65						
66						
67						
68						
69						
70						
71						
72						
73						
74						
75						
76						
77						
78						
79						
80						
81						
82						
83						
84						
85						
86						
87						
88						
89						
90						
91						
92						
93						
94						
95						
96						
97						
98						
99						
100						
TOTAL IND.						
TOTAL DEP.						
TOTAL CLAIMS						

PTO-1360 (3-78)

*MAY BE USED FOR ADDITIONAL CLAIMS OR AMENDMENTS

U.S. DEPARTMENT of COMMERCE
Patent and Trademark Office

SERIAL NUMBER	FILING DATE	CLASS	GROUP ART UNIT	ATTORNEY DOCKET NO.
09/034,773	03/02/98	~~395~~ 709	2756	03359.P004

APPLICANT

HENRY R. WILLIAMS JR., PALISADES, NJ.

CONTINUING DOMESTIC DATA********
VERIFIED

None mc

371 (NAT'L STAGE) DATA********
VERIFIED

Non mc

FOREIGN APPLICATIONS********
VERIFIED

Non mc

FOREIGN FILING LICENSE GRANTED 05/13/98

Foreign Priority claimed / 35 USC 119 (a-d) conditions met	STATE OR COUNTRY	SHEETS DRAWING	TOTAL CLAIMS	INDEPENDENT CLAIMS
☐yes ☑no / ☐yes ☐no ☑Met after Allowance Verified and Acknowledged mc (Examiner's Initials) _____ (Initials)	NO	6	31	5

ADDRESS

BLAKELY SOKOLOFF TAYLOR & ZAFMAN
SEVENTH FLOOR
12400 WILSHIRE BOULEVARD
LOS ANGELES CA 90025

TITLE

AGENT-BASED ON- LINE INFORMATION RETRIEVAL AND VIEWING SYSTEM

FILING FEE RECEIVED	FEES: Authority has been given in Paper No. _____ to charge/credit DEPOSIT ACCOUNT NO. _____ for the following:	
$1,326		☐ All Fees ☐ 1.16 Fees (Filing) ☐ 1.17 Fees (Processing Ext. of time) ☐ 1.18 Fees (Issue) ☐ Other _____ ☐ Credit

jc504 U.S. PTO
03/02/98

101/790;W
102/ ;W
103/242;W

Please type a plus sign (+) inside this box [+]

PTO/SB/05 (12/97)
Approved for use through 09/30/00. OMB 0651-0032
Patent and Trademark Office: U.S. DEPARTMENT OF COMMERCE
Under the Paperwork Reduction Act of 1995, no persons are required to respond to a collection of information unless it displays a valid OMB control number.

UTILITY PATENT APPLICATION TRANSMITTAL

(Only for new nonprovisional applications under 37 CFR 1.53(b))

Attorney Docket No. 03359.P004 Total Pages 5

First Named Inventor or Application Identifier Henry R. Williams, Jr.

Express Mail Label No. EL034142405US

ADDRESS TO: **Assistant Commissioner for Patents**
Box Patent Application
Washington, D. C. 20231

APPLICATION ELEMENTS
See MPEP chapter 600 concerning utility patent application contents.

1. X Fee Transmittal Form
(Submit an original, and a duplicate for fee processing)

2. X Specification (Total Pages 27)
(preferred arrangement set forth below)
- Descriptive Title of the Invention
- Cross References to Related Applications
- Statement Regarding Fed sponsored R & D
- Reference to Microfiche Appendix
- Background of the Invention
- Brief Summary of the Invention
- Brief Description of the Drawings (if filed)
- Detailed Description
- Claims
- Abstract of the Disclosure

3. X Drawings(s) (35 USC 113) (Total Sheets 6)

4. ___ Oath or Declaration (Total Pages ___)
   a. ___ Newly Executed (Original or Copy)
   b. ___ Copy from a Prior Application (37 CFR 1.63(d))
   (for Continuation/Divisional with Box 17 completed) **(Note Box 5 below)**
   i. ___ DELETIONS OF INVENTOR(S) Signed statement attached deleting inventor(s) named in the prior application, see 37 CFR 1.63(d)(2) and 1.33(b).

5. ___ Incorporation By Reference (useable if Box 4b is checked)
The entire disclosure of the prior application, from which a copy of the oath or declaration is supplied under Box 4b, is considered as being part of the disclosure of the accompanying application and is hereby incorporated by reference therein.

6. ___ Microfiche Computer Program (Appendix)

7. _____ Nucleotide and/or Amino Acid Sequence Submission
(if applicable, all necessary)
a. ____ Computer Readable Copy
b. ____ Paper Copy (identical to computer copy)
c. ____ Statement verifying identity of above copies

ACCOMPANYING APPLICATION PARTS

8. _____ Assignment Papers (cover sheet & documents(s))
9. _____ a. 37 CFR 3.73(b) Statement (where there is an assignee)
_____ b. Power of Attorney
10. _____ English Translation Document (if applicable)
11. __X__ a. Information Disclosure Statement (IDS)/PTO-1449
__X__ b. Copies of IDS Citations
12. _____ Preliminary Amendment
13. __X__ Return Receipt Postcard (MPEP 503) (Should be specifically itemized)
14. _____ a. Small Entity Statement(s)
b. Statement filed in prior application, Status still proper and desired
15. _____ Certified Copy of Priority Document(s) (if foreign priority is claimed)
16. __X__ Other: Certificate of Express Mail; Unsigned Declaration and Power of Attorney

17. **If a CONTINUING APPLICATION,** check appropriate box and supply the requisite information:
___ Continuation ____ Divisional ____ Continuation-in-part (CIP)
of prior application No: _

18. **Correspondence Address**
_____ Customer Number or Bar Code Label _____ (Insert Customer No. or Attach Bar Code Label here)
or
__X__ Correspondence Address Below

NAME Jordan M. Becker (Reg.No. 39,602)
BLAKELY, SOKOLOFF, TAYLOR & ZAFMAN LLP
ADDRESS 12400 Wilshire Boulevard
Seventh Floor
CITY Los Angeles STATE California ZIP CODE 90025-1026
Country U.S.A. TELEPHONE (408) 720-8598 FAX (408) 720-9397

12/01/97 - 2 - PTO/SB/05 (12/97)
Approved for use through 09/30/00. OMB 0651-0032
Patent and Trademark Office; U.S. DEPARTMENT OF COMMERCE

7. ____ Nucleotide and/or Amino Acid Sequence Submission
(if applicable, all necessary)
a. ____ Computer Readable Copy
b. ____ Paper Copy (identical to computer copy)
c. ____ Statement verifying identity of above copies

ACCOMPANYING APPLICATION PARTS

8. ____ Assignment Papers (cover sheet & documents(s))
9. ____ a. 37 CFR 3.73(b) Statement (where there is an assignee)
____ b. Power of Attorney
10. ____ English Translation Document (if applicable)
11. _X_ a. Information Disclosure Statement (IDS)/PTO-1449
_X_ b. Copies of IDS Citations
12. ____ Preliminary Amendment
13. _X_ Return Receipt Postcard (MPEP 503) (Should be specifically itemized)
14. ____ a. Small Entity Statement(s)
b. Statement filed in prior application, Status still proper and desired
15. ____ Certified Copy of Priority Document(s) (if foreign priority is claimed)
16. _X_ Other: Certificate of Express Mail; Unsigned Declaration and Power of Attorney

17. **If a CONTINUING APPLICATION,** check appropriate box and supply the requisite information:
___ Continuation ____ Divisional ____ Continuation-in-part (CIP)
of prior application No: _

18. **Correspondence Address**
____ Customer Number or Bar Code Label _____ (Insert Customer No. or Attach Bar Code Label here)
or
_X_ Correspondence Address Below

NAME Jordan M. Becker (Reg.No. 39,602)
BLAKELY, SOKOLOFF, TAYLOR & ZAFMAN LLP
ADDRESS 12400 Wilshire Boulevard
Seventh Floor
CITY Los Angeles STATE California ZIP CODE 90025-1026
Country U.S.A. TELEPHONE (408) 720-8598 FAX (408) 720-9397

PTO/SB/05 (12/97)
Approved for use through 09/30/00. OMB 0651-0032
Patent and Trademark Office; U.S. DEPARTMENT OF COMMERCE

PTO/SB/17(10/96)
Approved for use through 09/30/98. OMB 0651-0032
Patent and Trademark Office: U.S. DEPARTMENT OF COMMERCE
Under the Paperwork Reduction Act of 1995, no persons are required to respond to a collection of information unless it displays a valid OMB control number.

FEE TRANSMITTAL

TOTAL AMOUNT OF PAYMENT ($) 1,196.00

Complete if Known:
Application No.
Filing Date
First Named Inventor Henry R. Williams, Jr.
Group Art Unit
Examiner Name
Attorney Docket No. 03359.P004

METHOD OF PAYMENT (check one)

1. [X] **The Commissioner is hereby authorized to charge indicated fees and credit any over payments to:**

   Deposit Account Number 02-2666
   Deposit Account Name

   [X] **Charge Any Additional Fee Required Under 37 CFR 1.16 and 1.17**

   [ ] **Charge the Issue Fee Set in 37 CFR 1.18 at the Mailing of the Notice of Allowance, 37 CFR 1.131(b)**

2. X **Payment Enclosed**
   X **Check**
   _____ **Money Order**
   _____ **Other**

FEE CALCULATION (fees effective 10/01/97)

1. **FILING FEE**

Large Entity Fee Code	Large Entity Fee ($)	Small Entity Fee Code	Small Entity Fee ($)	Fee Description	Fee Paid
101	790	201	395	Utility application filing fee	790.00
106	330	206	165	Design application filing fee	
107	540	207	270	Plant filing fee	
108	790	208	395	Reissue filing fee	
114	150	214	75	Provisional application filing fee	

SUBTOTAL (1) $ 790.00

2. **CLAIMS**

			Extra		Fee from below		Fee Paid
Total Claims	31	- 20 =	11	X	22.00	=	242.00
Independent Claims	5	- 3 =	2	X	82.00	=	164.00
Multiple Dependent Claims				X		=	

Large Entity Fee Code	Large Entity Fee ($)	Small Entity Fee Code	Small Entity Fee ($)	Fee Description	Fee Paid
103	22	203	11	Claims in excess of twenty	242.00
102	82	202	41	Independent claims in excess of 3	164.00
104	270	204	135	Multiple dependent claim	
109	82	209	41	Reissue independent claims over original patent	
110	22	210	11	Reissue claims in excess of 20 and over original patent	

SUBTOTAL (2) $ 406.00

FEE CALCULATION (continued)

3. ADDITIONAL FEES

Large Entity Fee Code	Large Entity Fee ($)	Small Entity Fee Code	Small Entity Fee ($)	Fee Description	Fee Paid
105	130	205	65	Surcharge - late filing fee or oath	
127	50	227	25	Surcharge - late provisional filing fee or cover sheet	
139	130	139	130	Non-English specification	
147	2,520	147	2,520	For filing a request for reexamination	
112	920*	112	920*	Requesting publication of SIR prior to Examiner action	
113	1,840*	113	1,840*	Requesting publication of SIR after Examiner action	
115	110	215	55	Extension for response within first month	
116	400	216	200	Extension for response within second month	
117	950	217	475	Extension for response within third month	
118	1,510	218	755	Extension for response within fourth month	
128	2,060	228	1,030	Extension for response within fifth month	
119	310	219	155	Notice of Appeal	
120	310	220	155	Filing a brief in support of an appeal	
121	270	221	135	Request for oral hearing	
138	1,510	138	1,510	Petition to institute a public use proceeding	
140	110	240	55	Petition to revive unavoidably abandoned application	
141	1,320	241	660	Petition to revive unintentionally abandoned application	
142	1,320	242	660	Utility issue fee (or reissue)	
143	450	243	225	Design issue fee	
144	670	244	335	Plant issue fee	
122	130	122	130	Petitions to the Commissioner	
123	50	123	50	Petitions related to provisional applications	
126	240	126	240	Submission of Information Disclosure Stmt	
581	40	581	40	Recording each patent assignment per property (*times number of properties*)	
146	790	246	395	For filing a submission after final rejection (see 37 CFR 1.129(a))	
149	790	249	395	For each additional invention to be examined (see 37 CFR 1.129(a))	
Other fee (specify)					
Other fee (specify)					

SUBTOTAL (3) $ 0.00

*Reduced by Basic Filing Fee Paid

SUBMITTED BY:

Typed or Printed Name:	Jordan M. Becker		
Signature	John M. Becker	**Date**	3/2/98
Reg. Number	39,602	**Deposit Account User ID**	02-2666 (complete if applicable)

EXPRESS MAIL CERTIFICATE OF MAILING

"Express Mail" mailing label number: EL034142405US
Date of Deposit: 3/2/98
I hereby certify that I am causing this paper or fee to be deposited with the United States Postal Service "Express Mail Post Office to Addressee" service on the date indicated above and that this paper or fee has been addressed to the Assistant Commissioner for Patents, Washington, D. C. 20231

GRACE R. CRUZ
(Typed or printed name of person mailing paper or fee)

(Signature of person mailing paper or fee)

3/2/98
(Date signed)

Serial/Patent No.: _____ Filing/Issue Date: _____
Client: HANK WILLIAMS
Title: Agent-Based On-Line Information Retrieval and Viewing System

BSTZ File No.: 003359.P004 Atty/Secty Initials: JMB/grc
Date Mailed: 3/2/98 Docket Due Date: _____

The following has been received in the U.S. Patent & Trademark Office on the date stamped hereon:

- ☐ Amendment/Response (____ pgs.)
- ☐ Appeal Brief (____ pgs.) (in triplicate)
- ■ Application - Utility (22 pgs., with cover and abstract)
- ☐ Application - Rule 1.60 Continuation (____ pgs.)
- ☐ Application - Rule 1.60 Division (____ pgs.)
- ■ Application - Rule 1.60 CIP (____ pgs.)
- ☐ Application - Rule 1.62 Transmittal (____ pgs.)
- ☐ Application - Design (____ pgs.)
- ☐ Application - PCT (____ pgs.)
- ☐ Application - Provisional (____ pgs.)
- ☐ Assignment and Cover Sheet
- ■ Certificate of Mailing
- ■ Declaration & POA (4 pgs.) (unsigned)
- ☐ Disclosure Docs & Orig & Copy of Inventor's Signed Letter (____ pgs.)
- ■ Drawings: 6 # of sheets includes 6 figures
- ■ Express Mail No.: EL034142405US ■ Check No. 20993
- ☐ _____ Month(s) Extension of Time Amt: $1,196.00
- ■ Information Disclosure Statement & PTO-1449 (4 pgs.) ☐ Check No. _____
- ☐ Issue Fee Transmittal Amt: _____
- ☐ Notice of Appeal
- ☐ Petition for Extension of Time
- ☐ Petition for _____
- ■ Postcard
- ☐ Power of Attorney (____ pgs.)
- ☐ Preliminary Amendment (____ pgs.)
- ☐ Reply Brief (____ pgs.)
- ☐ Response to Notice of Missing Parts
- ☐ Request to Incorporate Disclosure Document (____ pgs.)
- ☐ Small Entity Declaration for Indep. Inventor/Small Business
- ■ Transmittal Letter (original & copy)

■ Other: Fee transmittal (In duplicate); 3 cited references

PTO/SB/17(10/96)
Approved for use through 09/30/98. OMB 0651-0032
Patent and Trademark Office: U.S. DEPARTMENT OF COMMERCE
Under the Paperwork Reduction Act of 1995, no persons are required to respond to a collection of information unless it displays a valid OMB control number.

JC520 U.S. PTO
09/034773
03/02/98

FEE TRANSMITTAL

TOTAL AMOUNT OF PAYMENT ($) 1,196.00

Complete if Known:
Application No. _____
Filing Date _____
First Named Inventor Henry R. Williams, Jr.
Group Art Unit _____
Examiner Name _____
Attorney Docket No. 03359.P004

METHOD OF PAYMENT (check one)

1. [X] **The Commissioner is hereby authorized to charge indicated fees and credit any over payments to:**

   Deposit Account Number 02-2666
   Deposit Account Name _____

   [X] **Charge Any Additional Fee Required Under 37 CFR 1.16 and 1.17**

   [ ] **Charge the Issue Fee Set in 37 CFR 1.18 at the Mailing of the Notice of Allowance, 37 CFR 1.131(b)**

2. X **Payment Enclosed**
   X **Check**
   _____ **Money Order**
   _____ **Other**

FEE CALCULATION (fees effective 10/01/97)

1. **FILING FEE**

Large Entity Fee Code	Large Entity Fee ($)	Small Entity Fee Code	Small Entity Fee ($)	Fee Description	Fee Paid
101	790	201	395	Utility application filing fee	790.00
106	330	206	165	Design application filing fee	
107	540	207	270	Plant filing fee	
108	790	208	395	Reissue filing fee	
114	150	214	75	Provisional application filing fee	
				SUBTOTAL (1)	$ 790.00

2. **CLAIMS**

			Extra		Fee from below		Fee Paid
Total Claims	31	− 20 =	11	X	22.00	=	242.00
Independent Claims	5	− 3 =	2	X	82.00	=	164.00
Multiple Dependent Claims				X		=	

Large Entity Fee Code	Large Entity Fee ($)	Small Entity Fee Code	Small Entity Fee ($)	Fee Description	Fee Paid
103	22	203	11	Claims in excess of twenty	242.00
102	82	202	41	Independent claims in excess of 3	164.00
104	270	204	135	Multiple dependent claim	
109	82	209	41	Reissue independent claims over original patent	
110	22	210	11	Reissue claims in excess of 20 and over original patent	
				SUBTOTAL (2)	$ 406.00

FEE CALCULATION (continued)

3. ADDITIONAL FEES

Large Entity Fee Code	Large Entity Fee ($)	Small Entity Fee Code	Small Entity Fee ($)	Fee Description	Fee Paid
105	130	205	65	Surcharge - late filing fee or oath	
127	50	227	25	Surcharge - late provisional filing fee or cover sheet	
139	130	139	130	Non-English specification	
147	2,520	147	2,520	For filing a request for reexamination	
112	920*	112	920*	Requesting publication of SIR prior to Examiner action	
113	1,840*	113	1,840*	Requesting publication of SIR after Examiner action	
115	110	215	55	Extension for response within first month	
116	400	216	200	Extension for response within second month	
117	950	217	475	Extension for response within third month	
118	1,510	218	755	Extension for response within fourth month	
128	2,060	228	1,030	Extension for response within fifth month	
119	310	219	155	Notice of Appeal	
120	310	220	155	Filing a brief in support of an appeal	
121	270	221	135	Request for oral hearing	
138	1,510	138	1,510	Petition to institute a public use proceeding	
140	110	240	55	Petition to revive unavoidably abandoned application	
141	1,320	241	660	Petition to revive unintentionally abandoned application	
142	1,320	242	660	Utility issue fee (or reissue)	
143	450	243	225	Design issue fee	
144	670	244	335	Plant issue fee	
122	130	122	130	Petitions to the Commissioner	
123	50	123	50	Petitions related to provisional applications	
126	240	126	240	Submission of Information Disclosure Stmt	
581	40	581	40	Recording each patent assignment per property (times number of properties)	
146	790	246	395	For filing a submission after final rejection (see 37 CFR 1.129(a))	
149	790	249	395	For each additional invention to be examined (see 37 CFR 1.129(a))	
Other fee (specify)					
Other fee (specify)					

SUBTOTAL (3) $ 0.00

*Reduced by Basic Filing Fee Paid

SUBMITTED BY:

Typed or Printed Name: Jordan M. Becker

Signature _____ **Date** 3/2/98

Reg. Number 39,602 **Deposit Account User ID** 02-2666 (complete if applicable)

UNITED STATES DEPARTMENT OF COMMERCE
Patent and Trademark Office
Address: COMMISSIONER OF PATENTS AND TRADEMARKS
Washington, D.C. 20231

APPLICATION NUMBER	FILING/RECEIPT DATE	FIRST NAMED APPLICANT	ATTORNEY DOCKET NO./TITLE
09/034,773	03/02/98	WILLIAMS	H 03359.P004

#2

0372/0608

BLAKELY SOKOLOFF TAYLOR & ZAFMAN
SEVENTH FLOOR
12400 WILSHIRE BOULEVARD
LOS ANGELES CA 90025

NLM [illegible] MAILED
2756

DATE MAILED: 06/08/98

NOTICE TO FILE MISSING PARTS OF APPLICATION
Filing Date Granted

An Application Number and Filing Date have been assigned to this application. The items indicated below, however, are missing. Applicant is given TWO MONTHS FROM THE DATE OF THIS NOTICE within which to file all required items and pay fees required below to avoid abandonment. Extensions of time may be obtained by filing a petition accompanied by the extension fee under the provisions of 37 CFR 1.136(a). **If any of items 1 or 3 through 5 are indicated as missing, the SURCHARGE set forth in 37 CFR 1.16(e) of ☐ $65.00 for a small entity in compliance with 37 CFR 1.27, or ☒ $130.00 for a non-small entity, must also be timely submitted in reply to this NOTICE to avoid abandonment.**

If all required items on this form are filed within the period set above, the total amount owed by applicant as a ☐ small entity (statement filed) ☒ non-small entity is $ 130.00 .

☐ 1. The statutory basic filing fee is:
- ☐ missing.
- ☐ insufficient.

Applicant must submit $ _____ to complete the basic filing fee and/or file a small entity statement claiming such status (37 CFR 1.27).

☐ 2. Additional claim fees of $_____, including any multiple dependent claim fees, are required.

$_____ for _____ independent claims over 3.

$_____ for _____ dependent claims over 20.

$_____ for multiple dependent claim surcharge.

Applicant must either submit the additional claim fees or cancel additional claims for which fees are due.

☑ 3. The oath or declaration:
- ☑ is missing or unexecuted.
- ☐ does not cover the newly submitted items.
- ☐ does not identify the application to which it applies.
- ☐ does not include the city and state or foreign country of applicant's residence.

An oath or declaration in compliance with 37 CFR 1. 63, including residence information and identifying the application by the above Application Number and Filing Date is required.

☐ 4. The signature(s) to the oath or declaration is/are by a person other than inventor or person qualified under 37 CFR 1.42, 1.43 or 1.47.
A properly signed oath or declaration in compliance with 37 CFR 1.63, identifying the application by the above Application Number and Filing Date, is required.

☐ 5. The signature of the following joint inventor(s) is missing from the oath or declaration:

_____

An oath or declaration in compliance with 37 CFR 1.63 listing the names of all inventors and signed by the omitted inventor(s), identifying this application by the above Application Number and Filing Date, is required.

☐ 6. A $50.00 processing fee is required since your check was returned without payment (37 CFR 1.21(m)).

☐ 7. Your filing receipt was mailed in error because your check was returned without payment.

☐ 8. The application does not comply with the Sequence Rules.
See attached "Notice to Comply with Sequence Rules 37 CFR 1.821-1.825."

☐ 9. OTHER: _____

Direct the reply and any questions about this notice to "Attention: Box Missing Parts."

A copy of this notice MUST be returned with the reply.

Monique Allen - dlA

Customer Service Center
Initial Patent Examination Division (703) 308-1202

PART 3 - OFFICE COPY

FORM PTO-1533 (REV.9-97)

Attorney Docket No. 003359.P004 PATENT

DECLARATION AND POWER OF ATTORNEY FOR PATENT APPLICATION

As a below named inventor, I hereby declare that:

My residence, post office address and citizenship are as stated below, next to my name.

I believe I am the original, first, and sole inventor (if only one name is listed below) or an original, first, and joint inventor (if plural names are listed below) of the subject matter which is claimed and for which a patent is sought on the invention entitled

Agent-Based On-Line Information Retrieval and Viewing System

the specification of which

___ is attached hereto.
XX was filed on March 2, 1998 as
United States Application Number 09/034,773
or PCT International Application Number_____
and was amended on _____.
(if applicable)

I hereby state that I have reviewed and understand the contents of the above-identified specification, including the claim(s), as amended by any amendment referred to above.

I acknowledge the duty to disclose all information known to me to be material to patentability as defined in Title 37, Code of Federal Regulations, Section 1.56.

I hereby claim foreign priority benefits under Title 35, United States Code, Section 119(a)-(d), of any foreign application(s) for patent or inventor's certificate listed below and have also identified below any foreign application for patent or inventor's certificate having a filing date before that of the application on which priority is claimed:

Prior Foreign Application(s)			Priority Claimed	
(Number)	(Country)	(Day/Month/Year Filed)	Yes	No
(Number)	(Country)	(Day/Month/Year Filed)	Yes	No
(Number)	(Country)	(Day/Month/Year Filed)	Yes	No

09034773 030298

I hereby claim the benefit under title 35, United States Code, Section 119(e) of any United States provisional application(s) listed below

(Application Number)	Filing Date
(Application Number)	Filing Date

I hereby claim the benefit under Title 35, United States Code, Section 120 of any United States application(s) listed below and, insofar as the subject matter of each of the claims of this application is not disclosed in the prior United States application in the manner provided by the first paragraph of Title 35, United States Code, Section 112, I acknowledge the duty to disclose all information known to me to be material to patentability as defined in Title 37, Code of Federal Regulations, Section 1.56 which became available between the filing date of the prior application and the national or PCT international filing date of this application:

(Application Number)	Filing Date	(Status -- patented, pending, abandoned)
(Application Number)	Filing Date	(Status -- patented, pending, abandoned)

I hereby appoint Farzad E. Amini, Reg. No. P42,261; Aloysius T. C. AuYeung, Reg. No. 35,432; William Thomas Babbitt, Reg. No. 39,591; Jordan Michael Becker, Reg. No. 39,602; Bradley J. Bereznak, Reg. No. 33,474; Michael A. Bernadicou, Reg. No. 35,934; Roger W. Blakely, Jr., Reg. No. 25,831; Gregory D. Caldwell, Reg. No. 39,926; Kent M. Chen, Reg. No. 39,630; Lawrence M. Cho, Reg. No. 39,942; Thomas M. Coester, Reg. No. 39,637; Roland B. Cortes, Reg. No. 39,152; Barbara Bokanov Courtney, Reg. No. P42,442; William Donald Davis, Reg. No. 38,428; Michael Anthony DeSanctis, Reg. No. 39,957; Daniel M. De Vos, Reg. No. 37,813; Tarek N. Fahmi, Reg. No. 41,402; Richard Leon Gregory, Jr., P42,607; James Y. Go, Reg. No. 40,621; Sharmini Nathan Green, Reg. No. 41,410; David R. Halvorson, Reg. No. 33,395; Thomas A. Hassing, Reg. No. 36,159; Eric Ho, Reg. No. 39,711; George W Hoover II, Reg. No. 32,992; Eric S. Hyman, Reg. No. 30,139; Dag H. Johansen, Reg. No. 36,172; Stephen L. King, Reg. No. 19,180; Michael J. Mallie, Reg. No. 36,591; Paul A. Mendonsa, Reg. No. P42,879; Darren J. Milliken, P42,004; Thinh V. Nguyen, P42,034; Kimberley G. Nobles, Reg. No. 38,255; Michael A. Proksch, Reg. No. P43,021; Ronald W. Reagin, Reg. No. 20,340; Babak Redjaian, P42,096; James H. Salter, Reg. No. 35,668; William W. Schaal, Reg. No. 39,018; James C. Scheller, Reg. No. 31,195; Anand Sethuraman, Reg. No. P43,351; Charles E. Shemwell, Reg. No. 40,171; Maria McCormack Sobrino, Reg. No. 31,639; Stanley W. Sokoloff, Reg. No. 25,128; Allan T. Sponseller, Reg. No. 38,318; Steven R. Sponseller, Reg. No. 39,384; Geoffrey T. Staniford, P43,151; Judith A. Szepesi, Reg. No. 39,393; Edwin H. Taylor, Reg. No. 25,129; George G. C. Tseng, Reg. No. 41,355; Lester J. Vincent, Reg. No. 31,460; John Patrick Ward, Reg. No. 40,216; Ben J. Yorks, Reg. No. 33,609; and Norman Zafman, Reg. No. 26,250; my attorneys; and Robert Andrew Diehl, Reg. No. 40,992; and Edwin A. Sloane, Reg. No. 34,728; my patent agents, of BLAKELY, SOKOLOFF, TAYLOR & ZAFMAN LLP, with offices located at 12400 Wilshire Boulevard, 7th Floor, Los Angeles, California 90025, telephone (310) 207-3800, and James R. Thein, Reg. No. 31,710, my patent attorney; with full power of substitution and revocation, to prosecute this application and to transact all business in the Patent and Trademark Office connected herewith.

Send correspondence to Jordan M. Becker (Name of Attorney or Agent), BLAKELY, SOKOLOFF, TAYLOR & ZAFMAN LLP, 12400 Wilshire Boulevard 7th Floor, Los Angeles, California 90025 and direct telephone calls to Jordan M. Becker (Name of Attorney or Agent), (408) 720-8598.

Express Mail Label No. EL 274305059

I hereby declare that all statements made herein of my own knowledge are true and that all statements made on information and belief are believed to be true; and further that these statements were made with the knowledge that willful false statements and the like so made are punishable by fine or imprisonment, or both, under Section 1001 of Title 18 of the United States Code and that such willful false statements may jeopardize the validity of the application or any patent issued thereon.

Full Name of Sole/First Inventor Henry R. Williams, Jr.

Inventor's Signature _____ Date 4/21/98

Residence Palisades, New Jersey (City, State) Citizenship U.S.A. (Country)

Post Office Address 11 Broadway, Third Floor
New York, NY 10004

Title 37, Code of Federal Regulations, Section 1.56
Duty to Disclose Information Material to Patentability

(a) A patent by its very nature is affected with a public interest. The public interest is best served, and the most effective patent examination occurs when, at the time an application is being examined, the Office is aware of and evaluates the teachings of all information material to patentability. Each individual associated with the filing and prosecution of a patent application has a duty of candor and good faith in dealing with the Office, which includes a duty to disclose to the Office all information known to that individual to be material to patentability as defined in this section. The duty to disclosure information exists with respect to each pending claim until the claim is cancelled or withdrawn from consideration, or the application becomes abandoned. Information material to the patentability of a claim that is cancelled or withdrawn from consideration need not be submitted if the information is not material to the patentability of any claim remaining under consideration in the application. There is no duty to submit information which is not material to the patentability of any existing claim. The duty to disclosure all information known to be material to patentability is deemed to be satisfied if all information known to be material to patentability of any claim issued in a patent was cited by the Office or submitted to the Office in the manner prescribed by §§1.97(b)-(d) and 1.98. However, no patent will be granted on an application in connection with which fraud on the Office was practiced or attempted or the duty of disclosure was violated through bad faith or intentional misconduct. The Office encourages applicants to carefully examine:

(1) Prior art cited in search reports of a foreign patent office in a counterpart application, and

(2) The closest information over which individuals associated with the filing or prosecution of a patent application believe any pending claim patentably defines, to make sure that any material information contained therein is disclosed to the Office.

(b) Under this section, information is material to patentability when it is not cumulative to information already of record or being made or record in the application, and

(1) It establishes, by itself or in combination with other information, a prima facie case of unpatentability of a claim; or

(2) It refutes, or is inconsistent with, a position the applicant takes in:

(i) Opposing an argument of unpatentability relied on by the Office, or

(ii) Asserting an argument of patentability.

A prima facie case of unpatentability is established when the information compels a conclusion that a claim is unpatentable under the preponderance of evidence, burden-of-proof standard, giving each term in the claim its broadest reasonable construction consistent with the specification, and before any consideration is given to evidence which may be submitted in an attempt to establish a contrary conclusion of patentability.

(c) Individuals associated with the filing or prosecution of a patent application within the meaning of this section are:

(1) Each inventor named in the application;

(2) Each attorney or agent who prepares or prosecutes the application; and

(3) Every other person who is substantively involved in the preparation or prosecution of the application and who is associated with the inventor, with the assignee or with anyone to whom there is an obligation to assign the application.

(d) Individuals other than the attorney, agent or inventor may comply with this section by disclosing information to the attorney, agent, or inventor.

EXHIBIT 2 - 2/15/2006 - 09:30:00

SECTOR #
0120

O I P E JUN 1 9 1998 PATENT & TRADEMARK OFFICE

E003359.P004 Patent

#3

IN THE UNITED STATES PATENT AND TRADEMARK OFFICE

In re Application of:

Henry R. Williams, Jr.

Application No.: 09/034,773

Filed: March 2, 1998

For: AGENT-BASED ON-LINE INFORMATION RETRIEVAL AND VIEWING SYSTEM

Assistant Commissioner for Patents
Washington, D.C. 20231
Box Missing Parts

RESPONSE TO NOTICE TO FILE MISSING PARTS OF APPLICATION
(FILING DATE GRANTED)

Sir:

In response to the Notice to File Missing parts of Application (Filing Date Granted) mailed June 8, 1998, please find enclosed:

(1) a duly executed Declaration and Power of Attorney with respect to the above-referenced patent application;

(2) a check in the amount of $130.00 in payment of the surcharge of 37 C.F.R. § 1.16(e); and

(3) a copy of the Notice to File Missing Parts of Application.

If any additional fee is required, please charge Deposit Account No. 02-2666. A duplicate of this Response is enclosed for deposit account charging purposes.

Respectfully submitted,

BLAKELY, SOKOLOFF, TAYLOR & ZAFMAN LLP

Dated: 6/16/98

Jordan M. Becker
Reg. No. 39,602

12400 Wilshire Blvd.
Seventh Floor
Los Angeles, CA 90025-1026
(408) 720-8598

FIRST CLASS CERTIFICATE OF MAILING

I hereby certify that this correspondence is being deposited with the United States Postal Service as first class mail with sufficient postage in an envelope addressed to the Assistant Commissioner for Patents, Washington, D.C. 20231

on 6/16/98
Date of Deposit

Grace R. Cruz
Name of Person Mailing Correspondence

Signature

6/16/98
Date

OIPE JC53 JUN 19 1998 PATENT & TRADEMARK OFFICE

UNITED STATES DEPARTMENT OF COMMERCE
Patent and Trademark Office
Address: COMMISSIONER OF PATENTS AND TRADEMARKS
Washington, D.C. 20231

JMB

APPLICATION NUMBER	FILING/RECEIPT DATE	FIRST NAMED APPLICANT	ATTORNEY DOCKET NO./TITLE
09/034,773	03/02/98	WILLIAMS H	03359.P004

0372/0608

BLAKELY SOKOLOFF TAYLOR & ZAFMAN
SEVENTH FLOOR
12400 WILSHIRE BOULEVARD
LOS ANGELES CA 90025

NOT ASSIGNED

2756

DATE MAILED: 06/08/98

NOTICE TO FILE MISSING PARTS OF APPLICATION
Filing Date Granted

An Application Number and Filing Date have been assigned to this application. The items indicated below, however, are missing. Applicant is given TWO MONTHS FROM THE DATE OF THIS NOTICE within which to file all required items and pay fees required below to avoid abandonment. Extensions of time may be obtained by filing a petition accompanied by the extension fee under the provisions of 37 CFR 1.136(a). **If any of items 1 or 3 through 5 are indicated as missing, the SURCHARGE set forth in 37 CFR 1.16(e) of ☐ $65.00 for a small entity in compliance with 37 CFR 1.27, or ☒ $130.00 for a non-small entity, must also be timely submitted in reply to this NOTICE to avoid abandonment.**

If all required items on this form are filed within the period set above, the total amount owed by applicant as a ☐ small entity (statement filed) ☒ non-small entity is $ 130.00.

☐ 1. The statutory basic filing fee is:
- ☐ missing.
- ☐ insufficient.

Applicant must submit $ _____ to complete the basic filing fee and/or file a small entity statement claiming such status (37 CFR 1.27).

☐ 2. Additional claim fees of $_____, including any multiple dependent claim fees, are required.

$_____ for _____ independent claims over 3.

$_____ for _____ dependent claims over 20.

$_____ for multiple dependent claim surcharge.

Applicant must either submit the additional claim fees or cancel additional claims for which fees are due.

☒ 3. The oath or declaration:
- ☒ is missing or unexecuted.
- ☐ does not cover the newly submitted items.
- ☐ does not identify the application to which it applies.
- ☐ does not include the city and state or foreign country of applicant's residence.

An oath or declaration in compliance with 37 CFR 1. 63, including residence information and identifying the application by the above Application Number and Filing Date is required.

☐ 4. The signature(s) to the oath or declaration is/are by a person other than inventor or person qualified under 37 CFR 1.42, 1.43 or 1.47.
A properly signed oath or declaration in compliance with 37 CFR 1.63, identifying the application by the above Application Number and Filing Date, is required.

☐ 5. The signature of the following joint inventor(s) is missing from the oath or declaration:

_____

An oath or declaration in compliance with 37 CFR 1.63 listing the names of all inventors and signed by the omitted inventor(s), identifying this application by the above Application Number and Filing Date, is required.

06/25/1998 DFEKD 00000006 09034773
01 FC:105 130.00 OP

☐ 6. A $50.00 processing fee is required since your check was returned without payment (37 CFR 1.21(m)).

☐ 7. Your filing receipt was mailed in error because your check was returned without payment.

☐ 8. The application does not comply with the Sequence Rules.
See attached "Notice to Comply with Sequence Rules 37 CFR 1.821-1.825."

☐ 9. OTHER: _____

Direct the reply and any questions about this notice to "Attention: Box Missing Parts."

A copy of this notice MUST be returned with the reply.

Monique Allen - DAT

Customer Service Center
Initial Patent Examination Division (703) 308-1202

PART 2 - COPY TO BE RETURNED WITH RESPONSE

FORM PTO-1533 (REV 9-97)

003359.P004 Patent

IN THE UNITED STATES PATENT AND TRADEMARK OFFICE

In re Application of:

Henry R. Williams, Jr.

Application No.: 09/034,773

Filed: March 2, 1998

For: AGENT-BASED ON-LINE INFORMATION RETRIEVAL AND VIEWING SYSTEM

Assistant Commissioner for Patents
Washington, D.C. 20231
Box Missing Parts

RESPONSE TO NOTICE TO FILE MISSING PARTS OF APPLICATION
(FILING DATE GRANTED)

Sir:

In response to the Notice to File Missing parts of Application (Filing Date Granted) mailed June 8, 1998, please find enclosed:

(1) a duly executed Declaration and Power of Attorney with respect to the above-referenced patent application;

(2) a check in the amount of $130.00 in payment of the surcharge of 37 C.F.R. § 1.16(e); and

(3) a copy of the Notice to File Missing Parts of Application.

If any additional fee is required, please charge Deposit Account No. 02-2666. A duplicate of this Response is enclosed for deposit account charging purposes.

Respectfully submitted,

BLAKELY, SOKOLOFF, TAYLOR & ZAFMAN LLP

Dated: 6/16/98

Jordan M. Becker
Reg. No. 39,602

12400 Wilshire Blvd.
Seventh Floor
Los Angeles, CA 90025-1026
(408) 720-8598

FIRST CLASS CERTIFICATE OF MAILING

I hereby certify that this correspondence is being deposited with the United States Postal Service as first class mail with sufficient postage in an envelope addressed to the Assistant Commissioner for Patents, Washington, D.C. 20231

on 6/16/98
Date of Deposit

Grace R. Cruz
Name of Person Mailing Correspondence

Signature

6/16/98
Date

~~0250~~ 0120 0260

#4

gnM

1-11-99

Attorney's Docket No. 03359.P004 PATENT

IN THE UNITED STATES PATENT AND TRADEMARK OFFICE

In Re Patent Application of:

Henry R. Williams, Jr.

Application No.: 09/034,773

Filed: March 2, 1998

For: Agent-Based On-Line Information Retrieval and Viewing System

Assistant Commissioner for Patents
Washington, D.C. 20231

INFORMATION DISCLOSURE STATEMENT

Sir:

Enclosed is a copy of Information Disclosure Citation Form PTO-1449 together with copies of the documents cited on that form. It is respectfully requested that the cited documents be considered and that the enclosed copy of Information Disclosure Citation Form PTO-1449 be initialed by the Examiner to indicate such consideration and a copy thereof returned to applicant(s).

Pursuant to 37 C.F.R. § 1.97, the submission of this Information Disclosure Statement is not to be construed as a representation that a search has been made and is not to be construed as an admission that the information

LJV/cak (10/01/97)

cited in this statement is material to patentability or constitutes prior art with respect to the present application.

Pursuant to 37 C.F.R. § 1.97, this Information Disclosure Statement is being submitted under one of the following (as indicated by an "X" to the left of the appropriate paragraph):

XX___ 37 C.F.R. §1.97(b).

_____ 37 C.F.R. §1.97(c). If so, then enclosed with this Information Disclosure Statement is one of the following:

____ A certification pursuant to 37 C.F.R. §1.97(e) or

____ A check for $240.00 for the fee under 37 C.F.R. § 1.17(p).

_____ 37 C.F.R. §1.97(d). If so, then enclosed with this Information Disclosure Statement are the following:

(1) A certification pursuant to 37 C.F.R. §1.97(e);

(2) A petition requesting consideration of the Information Disclosure Statement; and

(3) A check for $_____ for the fee under 37 C.F.R. §1.17(i) for submission of the Information Disclosure Statement.

If there are any additional charges, please charge Deposit Account No. 02-2666.

Respectfully submitted,

BLAKELY, SOKOLOFF, TAYLOR & ZAFMAN LLP

Dated: 3/17, 1998

Jordan M. Becker
Reg. No. 39,602

12400 Wilshire Blvd.
Seventh Floor
Los Angeles, CA 90025-1026
(408) 720-8598

FIRST CLASS CERTIFICATE OF MAILING

I hereby certify that this correspondence is being deposited with the United States Postal Service as first class mail with sufficient postage in an envelope addressed to the Assistant Commissioner for Patents, Washington, D.C. 20231

on 3/17/98
Date of Deposit

Grace R. Cruz
~~Name of~~ Person Mailing Correspondence

Signature

3/17/98
Date

LJV/cak (10/01/97)

Sheet 1 of 1

Form PTO-1449
(REV. 8-83)

U.S. DEPARTMENT OF COMMERCE
PATENT AND TRADEMARK OFFICE

ATTY. DOCKET NO.	SERIAL NO.
003359.P004	09/034,773

APPLICANT: Henry R. Williams, Jr.

FILING DATE	GROUP
3/2/98	2756 ~~Not assigned~~

INFORMATION DISCLOSURE CITATION

(Use several sheets if necessary)

OIPE
MAR 2 3 1998
PATENT & TRADEMARK OFFICE
2047

U.S. PATENT DOCUMENTS

*EXAMINER INITIAL		DOCUMENT NUMBER	DATE	NAME	CLASS	SUBCLASS	FILING DATE IF APPROPRIATE
MG		5,722,041	2/24/98	Freadman	455	6.3	

FOREIGN PATENT DOCUMENTS

		DOCUMENT NUMBER	DATE	COUNTRY	CLASS	SUBCLASS	TRANSLATION YES	TRANSLATION NO

OTHER DOCUMENTS *(Including Author, Title, Date, Pertinent Pages, Etc.)*

EXAMINER	DATE CONSIDERED
Melt Gedl	12/23/99

*EXAMINER: Initial if citation considered, whether or not citation is in conformance with MPEP 609; Draw line through citation if not in conformance and not considered. Include copy of this form with next communication to applicant.

#5
JRM
1-11-99

Attorney's Docket No. 03359.P004 PATENT

IN THE UNITED STATES PATENT AND TRADEMARK OFFICE

In Re Patent Application of:

Henry R. Williams, Jr.

Application No.: Not assigned

Filed: Herewith

For: Agent-Based On-Line Information Retrieval and Viewing System

Assistant Commissioner for Patents
Washington, D.C. 20231

INFORMATION DISCLOSURE STATEMENT

Sir:

Enclosed is a copy of Information Disclosure Citation Form PTO-1449 together with copies of the documents cited on that form. It is respectfully requested that the cited documents be considered and that the enclosed copy of Information Disclosure Citation Form PTO-1449 be initialed by the Examiner to indicate such consideration and a copy thereof returned to applicant(s).

Pursuant to 37 C.F.R. § 1.97, the submission of this Information Disclosure Statement is not to be construed as a representation that a search has been made and is not to be construed as an admission that the information

LJV/cak (10/01/97)

cited in this statement is material to patentability or constitutes prior art with respect to the present application.

Pursuant to 37 C.F.R. § 1.97, this Information Disclosure Statement is being submitted under one of the following (as indicated by an "X" to the left of the appropriate paragraph):

XX 37 C.F.R. §1.97(b).

_____ 37 C.F.R. §1.97(c). If so, then enclosed with this Information Disclosure Statement is one of the following:

____ A certification pursuant to 37 C.F.R. §1.97(e) or

____ A check for $240.00 for the fee under 37 C.F.R. § 1.17(p).

_____ 37 C.F.R. §1.97(d). If so, then enclosed with this Information Disclosure Statement are the following:

(1) A certification pursuant to 37 C.F.R. §1.97(e);

(2) A petition requesting consideration of the Information Disclosure Statement; and

(3) A check for $_____ for the fee under 37 C.F.R. §1.17(i) for submission of the Information Disclosure Statement.

If there are any additional charges, please charge Deposit Account No. 02-2666.

Respectfully submitted,

BLAKELY, SOKOLOFF, TAYLOR & ZAFMAN LLP

Dated: 3/2, 1998

Jordan M. Becker
Reg. No. 39,602

12400 Wilshire Blvd.
Seventh Floor
Los Angeles, CA 90025-1026
(408) 720-8598

"Express Mail" mailing label number: EL034142405US
Date of Deposit: 3/2/98
I hereby certify that I am causing this paper or fee to be deposited with the United States Postal Service "Express Mail Post Office to Addressee" service on the date indicated above and that this paper or fee has been addressed to the Assistant Commissioner for Patents, Washington, D. C. 20231

Grace R. Cruz
(Typed or printed name of person mailing paper or fee)

(Signature of person mailing paper or fee)

3/2/98
(Date signed)

LJV/cak (10/01/97)

Sheet 1 of 1

Form PTO-1449 (REV. 8-83)	U.S. DEPARTMENT OF COMMERCE PATENT AND TRADEMARK OFFICE	ATTY. DOCKET NO. 03359.P004	SERIAL NO. 09/034,773 ~~Not assigned~~
INFORMATION DISCLOSURE CITATION		APPLICANT Henry R. Williams, Jr.	
(Use several sheets if necessary)		FILING DATE 3/2/98 ~~Filed herewith~~	GROUP 2756 ~~Not assigned~~

U.S. PATENT DOCUMENTS

*EXAMINER INITIAL		DOCUMENT NUMBER	DATE	NAME	CLASS	SUBCLASS	FILING DATE IF APPROPRIATE

FOREIGN PATENT DOCUMENTS

		DOCUMENT NUMBER	DATE	COUNTRY	CLASS	SUBCLASS	TRANSLATION YES	TRANSLATION NO

OTHER DOCUMENTS *(Including Author, Title, Date, Pertinent Pages, Etc.)*

MG			"Intermind Announces Approval of First Patent Application," dated October 7, 1997, downloaded from http://www.intermind.com/inside/press_rel/100797_allow.html, 3 pages.
MG			"About Intermind's Channel Communications Patents," downloaded from http://www.intermind.com/materials/patent_desc.html on 2/27/98, 5 pages.
MG			"Frequently Asked Questions about Intermind's Patents," downloaded from http://www.intermind.com/materials/patent_faq.html on 2/27/98, 9 pages.

EXAMINER Mehta Geeta	DATE CONSIDERED 12/20/99

*EXAMINER: Initial if citation considered, whether or not citation is in conformance with MPEP 609; Draw line through citation if not in conformance and not considered. Include copy of this form with next communication to applicant.

#2

Press Releases

Press Releases

Related Links

About the Patents

Intermind Announces Approval of First Patent Application

Intermind's first patent covers broad range of channel communications technology — licensing to begin immediately

Seattle, WA, October 7, 1997—Intermind Corporation[tm] announced today that it received allowance on its first patent application for channel communications and related technologies. The U.S. Patent & Trademark office approved all 26 claims contained in Intermind's first patent application.

Intermind's first patent will broadly cover first-generation channel systems in which specialized software files are exchanged between providers and consumers of information to automate the customized delivery of useful content. It will also cover many features of second-generation versions of channel communications products.

Intermind has established significant brand recognition in the channel communications or "push" technology industry. Channel technology, which has been incorporated into the leading Web browsers, enables the intelligent delivery of information to users based on their interests and needs. Intermind's approach is applicable to the Internet and corporate networks as well as a wide variety of other systems such as digital telephones, pagers, and television.

Intermind also announced plans to leverage its extensive holdings of intellectual property through licensing and technology partnerships. The company believes it is unlikely that there will be any push technology products in the next several years that will not require a license from Intermind. While details of its plans to license its communications patents are still being finalized, Intermind has promised to support the growth of the marketplace and use of its technology. Licensing terms will be commercially reasonable and offered on a non-discriminatory basis without preference for specific architectures or product designs. Early adoption incentives are also being planned.

Intermind began development of object-based push technology before any other company and is an industry leader in the development of advanced features and applications of channel communications. The company

intends to be a catalyst for licensing rights in the development of push technology, systems, and standards.

Intermind co-founder Drummond Reed describes how the patent system exists to protect and encourage innovation. "With the open environment of the Internet the patent system is more important, not less," Reed observes. "In this market, any new technology can be copied quickly and easily. What is the incentive for small companies to be innovative when their products and technologies can be copied with impunity by larger companies already dominating this space?" Reed notes that the PTO action is particularly significant since before granting approval, the patent examiner studied a broad range of prior art unearthed by Intermind and its consultants—as well as major companies and outside experts. Intermind has taken pains to present the PTO with anything a licensee might believe to cast a doubt to Intermind's rights and patents.

The concepts at the core of the company's initial patent, first applied to push products, are expected to continue to grow rapidly in importance. As the Internet and private corporate networks increasingly focus on routing the right data to the right recipients at the right time, Intermind's technology is expected to appear at the heart of virtually all digital communications systems. Because Intermind's concepts are not tied to any particular computing platform, they directly affect the future of information exchange over all systems.

Tim Sloane, Director of Messaging Applications and Services at the Aberdeen Group, sees Intermind as a leader in network communications. "Intermind Communicator was the first product that used metadata, about both people and content, to automate the delivery of relevant information," says Sloane. "This is the goal of CDF, and the essence of Netcaster too, so this patent will almost certainly be something the industry has to contend with."

Intermind has filed multiple U.S. and international patents broadly covering the channel communications area. Together, the company's applications comprise hundreds of pages of specifications and more than 200 patent claims. Intermind's second U.S. patent application addresses architectures that automatically sense users' information needs and intelligently deliver communications based on detailed user-profile data, as well as custom feedback mechanisms that enable true intelligent bi-directional exchanges.

Intermind's channel communications technology creates a dramatically simple and automated way for publishers and subscribers—whether people or applications—to control the

communication of any type of data over all types of networks. Intermind's breakthrough technology requires that publishers and consumers exchange only a simple file containing metadata—data about the data to be transferred. The metadata control files are the key to automating all forms of content delivery and subscriber feedback.

Intermind's intellectual property is expected to have broad implications for various standards now under consideration by industry groups, including Channel Definition Format (CDF) and applications of Resource Description Format (RDF). Intermind is an active member of the World Wide Web Consortium (W3C) and sits on the W3C working group for RDF.

Intermind pioneered the development of object-oriented channel communications technology software that simplifies access, notification and delivery of personalized information on the Internet, intranets and other digital networks. Intermind Corporation is a privately held company headquartered in Seattle, Washington. Additional information is available at http://www.intermind.com, or toll-free at (800) 814-4134 or (206) 812-6000 in Seattle.

CONTACTS:

Peter Heymann
Intermind Corporation
(206) 812-6000
peterh@intermind.com

Home

About Intermind's Channel Communications Patents

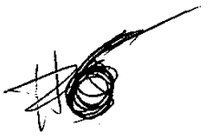

Background

In the past four years the World Wide Web has completely transformed the global information economy. It's success is due to the inherent simplicity and power of HTML as a common format to display and link information everywhere. The result is that more information is now available via the Web than any other network in history.

As a document display and linking format, however, HTML does nothing to address another urgent problem: extracting the most useful information and actively delivering it to the right users in the right format at the right time. With today's knowledge worker drowning in a sea of e-mail, voicemail, newsgroups, groupware, and other electronic messages, solving this problem of "information flow control" has become the next great challenge of communications technology.

In 1996 a first generation of products appeared to address this problem. Grouped under the rubric "push" in contrast with the prevailing model of "pulling" information down from the Web, these products attempted to deliver information selectively to the users most interested in it. Yet the most common complaint of these products is that they exacerbated rather than relieved the problem of message overload. They delivered more information without delivering more *control* over that information.

Channel Communications

In the early 1990's Intermind's founders began working on an altogether different solution to the problem of communications control. It was based on the idea of a control structure exchanged between an information publisher and subscriber. The publisher creates the control structure describing how to automate communications with the publisher, and the subscriber uses a special program to store and process the control structure to automate the flow of information from the publisher.

This new form of communications relationship came to be called a *channel*, and the control structure a *channel object*. In October of 1996 Intermind introduced the first channel object publishing/subscribing product for the Web, Intermind Communicator™, and the technology quickly spread throughout the industry. By the following March, Microsoft had proposed its own specification for channel objects, Channel Definition Format (CDF); PointCast announced that PointCast 2.0 would include CDF channel object publishing capabilities; Backweb adopted the CDF format; and Netscape introduced its own HTML/Java-based channel object format.

The real power of channel objects is not just that they can control the automatic delivery of information from publishers to subscribers, but that they control *every aspect* of this process. They do this by carrying the control information required to

know when and how to act on message content. For example, channel objects can be used to control message filtering, encryption, notification, formatting, presentation, storage, and feedback.

In short, channel object technology represents an open, distributed, scaleable solution to the problem of intelligent message control on any form of electronic network. As channel technology grows, a global standard for channels has the potential to become for digital communications what HTML is to documents.

Intermind's Patents

The U.S. Patent and Trademark Office (PTO) recently completed its review of Intermind's first U.S. patent application and issued a notification of allowance on all 26 claims. This means that after administrative processing, which typically takes two to three months, the patent will issue. These claims represent only the first of Intermind's patent applications but are the most important because they are the top-level claims on which many others are based. Intermind has also filed for these patents internationally.

Intermind's claims fundamentally involve the use of a control structure to automate communications. The heart of this control structure is *metadata*—data which describes other data. In the case of a channel, the metadata is data which describes how to control the communications of other data. A common example of metadata is the information in a library card catalog, e.g. the title, author, publisher, and publication date of a book.

The essence of Intermind's top claim is that two devices—a sender and receiver—have persistent storage, communicate over a network, and exchange a control structure including metadata which describes: 1) what information is to be updated, 2) when to update this information, and 3) how to transfer the updated information. In addition, at least the receiving device must be able to process the metadata in order to perform the update determination and transfer. Any digital communications system which incorporates all of these elements will be covered by Intermind's patents.

The use of metadata in communications is not itself novel. Metadata is in fact the key to the Web—the "tags" in Web pages are a form of metadata describing how to display and link information. Web browsers are special programs that know how to read and process this metadata. What is novel in Intermind's invention is the use of metadata in a control structure stored by a subscriber to govern a persistent communications relationship with a publisher, i.e. one which automatically controls the updating or feedback of information.

This communications control approach fundamentally differs from previous technologies. E-mail, for instance, uses metadata as part of every e-mail message (such as the To, From, Subject, and other header information), but this metadata is fixed and cannot be modified by the users. Lotus Notes allows more flexible metadata in Notes databases, but does not use this metadata to define and control information delivery or feedback. Agent systems like Telescript also employ metadata but do not share it between publishers and subscribers to create direct

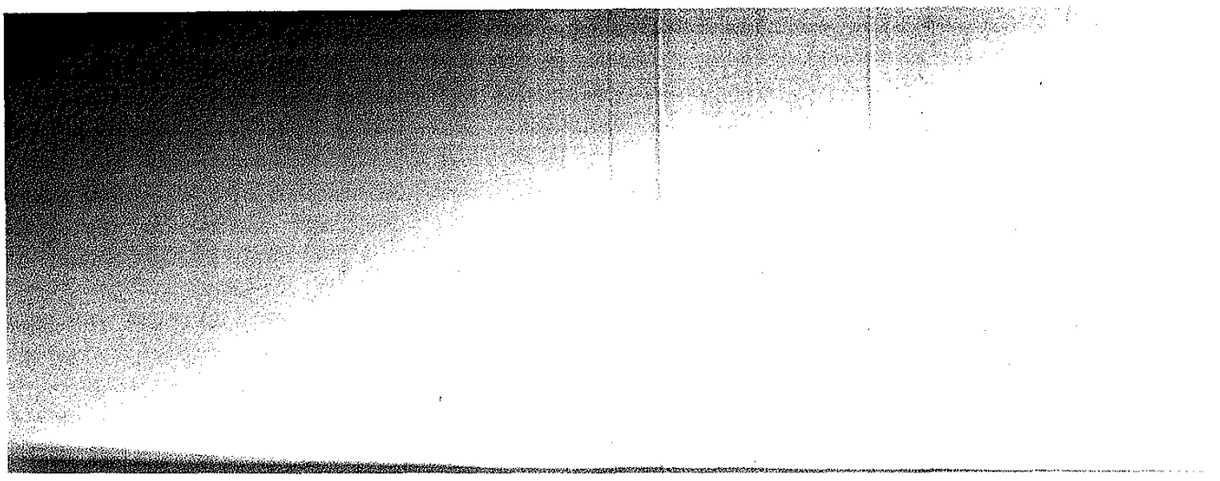

communications connections. Cookies are the form of metadata that most resembles a channel object but cookies are not processed by a browser to automate the delivery of information to a subscriber.

Claims Depth

A patent consists of two parts: a *specification* describing the invention and *claims* which establish a legal definition of the scope of the invention. Patent claims are written in tree structures where the top claim, called the *independent claim*, covers the most basic elements needed to describe the invention while underlying claims, called *dependent claims*, include additional elements that further define and enhance the invention.

Intermind's first patent contains two independent claims covering the core channel communications control process and 24 dependent claims covering additional elements, enhancements, and applications of this process. Other pending applications contain more than 200 additional dependent claims. These dependent claims cover numerous specific features of channel communications systems including:

- Control of information delivery via push, pull, or multicasting mechanisms (note that the delivery mechanisms themselves are not patented, only this new process for controlling them).
- Control of channel security, including automating the use of public/private key encryption and authentication (again, encryption technologies themselves are not patented, only this technique for automatically controlling their usage).
- Control of message formatting, filtering, notification, display, and archiving.
- Control of intelligent message forwarding and chaining.
- Control of channel feedback, including "smart forms", schedule synchronization, channel transactions, and automatically-generated channel usage statistics.
- Control of linked channels, service channels, and multi-channel transactions.
- Control of many-to-many channel publishing and subscribing.

The dependent claims also cover numerous applications of channel technology in low-bandwidth and mobile environments, set-top boxes, e-mail and groupware applications, electronic commerce, and distributed communications services.

Defensibility

From its inception, Intermind has exercised care to protect its innovations thoroughly. The company retained a nationally-renowned patent law firm, Wolf Greenfield & Sacks, which was selected based on its extensive experience in software patents and successful representation of such companies as Vermeer Technologies, the original developers of Microsoft FrontPage™.

Intermind is confident its patents will withstand validity challenges. To begin with, the company's founders began documenting its channel communications innovations well before the commercial rise of the World Wide Web and years in advance of the surge of interest in push technologies. Industry analysts have also noted that Intermind's products were the first to use an open, extensible channel object technology.

Secondly, the company and its consultants have spent hundreds of man-hours searching for *prior art* (technology which precede Intermind's invention), both patented and non-patented. During PTO patent examination this effort was expanded to include the input of other companies and experts in the industry. All of the prior art unearthed by these searches was submitted to the PTO and considered by the patent examiner prior to allowance being granted. None met the test of Intermind's claims for the elements and functionality of channel object technology.

The third reason for Intermind's confidence is the depth of the claims trees. Even if one or more top-level claims is invalidated by some previously undiscovered prior art, the many layers of dependent claims covering key features of channel technology mean the scope of the patent coverage will not be significantly reduced.

Implications for the Market

The rapid growth of channel communications in the last year signals the broad impact it will have on the development of the Web as well as on other digital communications media such as telephones, pagers, and interactive television. Many Internet products are already shipping with technology that may be subject to Intermind's patents. However Intermind is planning a progressive licensing program which will support the continued strong growth of this market.

Intermind's intellectual property is also highly relevant to several standards submissions currently being reviewed by the World Wide Web Consortium (W3C). These include CDF (Channel Definition Format), Microsoft's proposed vocabulary for channel metadata; and P3P (Platform for Privacy Preferences Project), which will govern the automatic negotiation and exchange of user profile information (P3P includes PICS and dSIG as well as Netscape's, Firefly's, and Verisign's OPS proposal).

Intermind is an active member of the W3C and a strong supporter of global standards for channel communications. The company currently serves as a member of the RDF (Resource Description Framework) Working Group for metadata representation and syntax, and is working closely with the W3C to resolve any standards issues relating to its intellectual property. Intermind has committed to support such standards in its licensing programs by offering reasonable terms on a non-discriminatory basis.

For More Information

For a more detailed description of channel communications technology and the major categories of features it enables, please see the white paper *Pushing Push:*

Advancing the Features of Channel Communications that Intermind presented at the W3C Push Workshop in September.

For more detailed information about our patent and licensing terms, please contact:

Peter Heymann
206-812-6000 Voice
206-812-6001 Fax

Home

Frequently Asked Questions about Intermind's Patents

Following is a list of the most frequently asked questions after Intermind's announcement of the allowance of its first patent by the U.S. Patent and Trademark Office.

General Questions

What does Intermind's first patent cover?

Intermind's patent covers a new way to control and automate the delivery of information between publishers and subscribers over a computer network. The key is a special communications control file called a *channel object.* Channel objects are created by publishers and contain special information describing what, where, when, and how information can be delivered. Subscribers use a program called a *channel processor* to read channel objects and manage what information is delivered, when (e.g., how often) and how (e.g., in what format, using which delivery services or transports, etc.). The patent also covers other control features such as subscriber notification, automatic and manual feedback, and automatic updating of the control file itself.

How is this different from a Web browser and Web pages?

A web browser lacks the ability to update information for the user beyond a single browser session. It simply downloads data from a server selected by the user and displays it. On the other hand, a channel processor has the ability to use the information in the channel object (the *channel metadata)* to persistently deliver information matching the user's needs, and to control the processing of that information when it arrives.

Another way to put this is that a web page is simply a container of information and links to other information. It lacks the three elements necessary to control a channel:

- information describing information which can be updated over time;
- information describing how to determine when the information is updated;
- information describing how to deliver the updated information.

A channel object contains (at a minimum) these three pieces of metadata. A copy of the channel object must be stored by the subscriber to a channel in order to establish a persistent, intelligent communications link. By comparison, there is no requirement for users of browsers to store a copy of a web page.

Isn't this the way the channels in Netscape Netcaster and MS Internet Explorer 4.0 work?

Yes.

How is this different from PointCast?

PointCast 1.0, introduced in February of 1996, did not use channel objects. Rather it was a client/server application which acted as a dedicated access program for the newsfeed of which PointCast Corporation was the exclusive publisher. PointCast has patents pending on the use of this kind of application for the display of advertising information in a screen-saver format.

Intermind introduced channel-object technology with the launch of Intermind Communicator(tm) in October of 1996. Like Web technology, channel objects do not limit subscribers to proprietary channels. Anyone with Web site access can become a channel publisher.

In March of 1997 PointCast announced that PointCast 2.0 would support "open" channels based on the Channel Definition Format (CDF) specification for channel objects jointly developed with Microsoft. PointCast also said it would offer a channel-object authoring tool, PointCast Connections, that would create CDF channel objects compatible with the new PointCast client.

Is this the only patent Intermind has applied for?

No. Channel-object technology, like hypertext, is a rich new way to automate the delivery and processing of all types of digital communications. Intermind has been developing channel-object technology since the early 1990s and has applied for patents covering many significant innovations in this field. These patents are several hundred pages in length and contain more than 200 additional claims.

What does Intermind intend to do with these patent rights?

Patent rights enable innovators to receive a reasonable share of the profits generated by their technologies and provide a return to their shareholders. This is Intermind's goal. We are currently formulating a progressive licensing program designed to promote the rapid growth of channel communications technologies. Intermind will also participate in the industry standards-setting process and working with licensees to promote new features and applications of the technology. At the end of the day we'd rather have a small piece of a much bigger pie than create any barriers to the application of this technology.

Do you have any licensees?

No, not at this time. We're just beginning the licensing process.

What are Intermind's licensing terms?

Terms have not yet been announced. Intermind has just begun to offer licenses. However, licenses will be offered on a commercially reasonable basis. Some discount will probably be offered to early licensees in each market segment.

Will Microsoft and Netscape license?

We don't see any reason why they wouldn't. Our claims are very solid in the areas in which their products are involved. Intermind took great pains to present to the Patent and Trademark Office (PTO) every type of prior art the company and its consultants have been able to locate. All of this art has been officially considered by the patent examiner. Also, Microsoft has highly regarded the work of our patent counsel in the past (Wolf Greenfield and Sacks was the patent counsel for Vermeer Technologies, creators of FrontPage, which Microsoft purchased in 1996.)

Infringement Questions

How do I know if I infringe?

Products that incorporate Intermind's technology are fairly easy to recognize: among other features, they rely on the exchange between publishers and subscribers of a file containing control information (metadata) to set up a persistent communications link. We call this file the channel object. Generally speaking, a patent holder's rights are infringed by any party who manufactures, sells, or uses a product that incorporates the innovations claimed by the inventor.

Does Intermind plan to sue users of this technology?

Our first approach will be to offer licenses to everyone and anyone using our technologies in the Internet marketplace and other markets. We have no desire to be litigious. However, in appropriate circumstances we'll take the necessary steps to enforce our rights.

Patent Questions

Have you actually received the patent?

We have received official notice that the U.S. Patent and Trademark Office (PTO) has approved Intermind's patent claims. This is known as a patent allowance, and it means that the PTO has completed its analysis and rendered its final decision. After paying a fee, the actual patent is issued following the necessary administrative steps, a process that usually takes two to three months.

How many claims were included in your application?

There were 26 claims in Intermind's first patent application, and after minor modifications all 26 were approved.

What is specifically covered by Intermind's patent claims?

The top claims cover the exchange of a control structure between a publisher and a subscriber which governs the automatic updating of information for the subscriber and the automatic feedback of information to the publisher.

Dependent claims cover specific features of this process, including:

- Control over selection of the delivery method used (true push, automated pull, or multicasting);
- Control over user notification and display of new messages;
- Control over subscriber feedback, including "smart forms" and channel usage statistics.

For additional information about claims coverage, see the overview of Intermind's patent at our web site www.intermind.com. For copies of actual patent materials and further licensing information, please contact Drummond Reed, Vice President, 206-812-6000 (Voice), 206-812-6001 (Fax).

How is channel object technology different than previous types of network communications?

Major distinguishing features of the channel object approach to automating communications are:

- a control structure that is exchanged between the sender and receiver of information;
- an extremely lightweight control structure;
- a control structure that is highly transportable between different types of systems;
- avoidance of programming in the control structure;
- elements for the determination of updates and associations with publisher data; and
- elements for the delivery of feedback and dynamic evolution of the control structure.

The corresponding benefits enabled by these features include:

- achievement of true communications through the joint definition and management of the control structure by the publisher and subscriber, including feedback mechanisms;
- a system that takes full advantage of the presence of the network and the persistent availability of data, minimizing network traffic, transmission requirements, duplicate storage of data and consumption of subscriber memory;
- the ability to deploy the system over all types of networks, computers and devices;
- avoidance of the need for either the publisher or subscriber to invest heavily in programming to participate in the system;
- delivery of useful information—i.e., data that is delivered on a timely basis, and that has value to the subscriber;
- true two-way communications through an electronic dialogue in which the control structure can be highly customized to the needs of each subscriber and can automatically grow in intelligence and evolve with changes in content and user needs.

Why do you think the patent will survive any challenge?

Two reasons:

Novelty: In the U.S., the patentee must be the first to invent (in the rest of the world, the patentee can be the first to file for a patent, regardless of invention date). Intermind's founders began work on the patent concepts in the early 90's, long before other push companies and before the Web itself had taken off. A detailed formal disclosure documenting the date of invention was made at that time.

"Non-obviousness": To be valid, a patent must be non-obvious in light of the other technologies existing at the time of invention. Intermind's channel technology may make more sense today, but was a marked departure from other technologies at the time they were conceived. Intermind's own product, Intermind Communicator(tm), provides further evidence: industry analysts acknowledge it was the first channel object publishing/subscribing product on the market, and also the first to introduce such features as channel folders, channel passwords, dynamic channel publishing, and customizable channel feedback.

What about "prior art"? Aren't there other products that did something like this?

Hundreds of man hours have been spent unearthing preexisting technologies (prior art) by Intermind, its consultants, and experts in the industry. All of this prior art was submitted to the PTO and considered by the patent examiner prior to granting allowance. None of this art was found to contain the elements of our topmost (simplest) patent claim, let alone the layers of additional claims which cover many specific features and enhancements.

What prior art was considered?

Prior art relating to almost any form of electronic communications was considered. The majority of it falls into the following categories:

Distributed object systems. While a distributed object system like Java or ActiveX is an ideal platform on which to build a channel communications system, by itself a distributed object system does not contain the necessary elements, i.e. special communications control objects; the exchange of those control objects between a publisher and subscriber; a processor to manage communications using these objects; and subsequent replication of the objects to maintain and evolve communications control.

Lotus Notes[tm] and other replicated databases. Replication itself is not new; products like Notes have automated replication for years. However this replication is defined within the architecture of Notes

itself; it does not transfer a communications control structure (such as a channel object) from a publisher to a subscriber to control communications. While it is possible to establish selective replication of files in a Notes database to a user based on keywords, the control structure must be created and modified by the subscriber.

Agent technologies such as Telescript and Tcl. Agents are used to control communications, but in an entirely different way than channel objects. Agents are typically "mobile processes" which travel between servers on a network to perform tasks on behalf of the agent's owner. They are not exchanged with subscribers to directly control the exchange of information with publishers.

Web technologies. Web page tags, such refresh tags, do not involve the persistent storage of a communications control from the publisher at the subscriber, so they can't control communications outside of a browser session. "Smart" bookmarks and offline browsers all involve control only from the subscriber side, so they can't take advantage of metadata supplied by the publisher.

Multimedia synchronization systems. These systems provide for the synchronization of two multimedia objects but do not contain the metadata or processing necessary to control communications outside of these objects.

Metadata indexing systems. Technologies such as Harvest gather and index metadata describing Web resources, but this metadata is not used to control communications of updates in the resources it describes.

How does Intermind's patent relate to other patents in the push area?

At this time, the most prominent patents in the push area are:

Novadigm, Inc. was awarded a patent for "fractional differencing" in December 1996. This technology is used in products designed to efficiently update and maintain over networks software running on end-user systems. Novadigm in March 1997 charged competitor Marimba with infringing and recently asked the World Wide Web Consortium (W3C) to suspend consideration of the proposed Distribution and Replication Protocol (DRP) standard proposed by Marimba pending resolution of this dispute.

TIBCO Corporation has several patents covering its subject-based addressing technology, which provides a way to multicast content using subject names instead of physical network addresses. In addition to increasing network efficiency, subject-based addressing helps messages reach their destinations without involving programmers in the details of network addresses or protocols.

PointCast Corporation has a patent pending on its SmartScreen(TM)

technology which automatically displays pushed content when a viewer's computer is idle.

While each of these patents covers a technology which can be employed within a channel communications system, none of them directly overlap Intermind's channel object patent claims.

Standards Questions

What about the impact on standards in this area?

Intermind is a long-standing member of the W3C and a strong supporter of Internet standards and openness. We have always believed a global channel communications standard will be as important to the growth of channel technology as HTML was to the Web. Such standards are well underway and we are working closely with the W3C to resolve any issues related to our intellectual property.

What W3C standards does this patent involve?

Several standards now under consideration by the W3C may be related to Intermind's patent claims. All of these are in progress within the W3C and no specific comment can be made until the outcome of the W3C Working Group process. Standards which may be affected include:

- CDF (Channel Description Format), a proposal from Microsoft for a standard vocabulary for channel metadata;
- P3P (Platform for Privacy Preferences Project) , a set of standards governing the automatic negotiation and exchange of subscriber profile information (P3P includes PICS and DSig as well as Netscape's, Firefly's, and Verisign's OPS proposal).
- OSD (Open Software Distribution), a standard governing the use of metadata to control the delivery and installation of software updates.

What is Intermind's position relative to standards in this area?

Intermind is committed to non-discriminatory licensing on commercially reasonable terms. Our goal is to support the unfettered evolution and adoption of the technology while generating a fair return for our investment.

About the Technology

Are push and channels way over-hyped? What is this technology really good for?

"Push" is actually an unfortunate name for a new paradigm for controlling communications. "Push technology" as represented by the products introduced thus far is a small subset of what channel communications will become, and as with most such revolutions the first examples tend to be simplistic and fall short of the

intended benefit. Future versions of channel communications products will realize the vision of intelligent information interchange—in which profiles govern the automatic exchange and processing of all types of communications based on every subscriber's precise needs and preferences.

Is channel-object technology limited to the Web?

No. It is applicable to any type of digital communications and network.

How is Intermind further developing the technology?

Intermind continues to perform applied research in the area of intelligent communications and plans to establish joint ventures with other companies to adapt the technology to other applications and platforms.

About the Company

What will happen to Intermind Communicator and the company's other products?

Intermind's products will continue to be available from our web site, where people can download, examine and use them at no cost. However, product development, marketing and sales will cease. Intermind is acknowledging market reality: we can't compete with similar functionality when it's built into the browser. This is an evolution that occurred sooner than we anticipated, but it is also the development that has made our intellectual property so valuable and moved us to a licensing model.

What about Intermind's services?

Intermind's Measurement and Feedback System (which delivers channel usage statistics) will no longer be available to publishers due to the cost of delivery. Basic registration services, which are required to use Intermind Communicator after download, will remain available from the web site. To maximize the value of this "freeware" to all users, we are working on a version of Intermind Communicator which no longer requires registration. Until then, the product can continue be used anywhere clients can install and complete over-the-net registration.

What about product support?

Support resources will be delivered from the Intermind web site, including answers to common questions, visual training aids and links to other resources. Email and phone support will be phased out.

What is the company's strategy going forward?

Intermind plans to leverage the value of its intellectual property through licensing and technology joint ventures. In the latter area, the company expects to work closely with companies interested in introducing channel communications

technology to new markets and applications. Intermind will also contribute to startups working in such areas where feasible.

Who are the company's investors?

Intermind is a privately held company owned by management and financial investors including two companies controlled by Craig McCaw. The company was founded by Peter Heymann and Drummond Reed, both of whom currently serve as employees and are substantial equity holders.

Pleaste send comments to Drummond Reed

Home

UNITED STATES DEPARTMENT OF COMMERCE
Patent and Trademark Office
Address: COMMISSIONER OF PATENTS AND TRADEMARKS
Washington, D.C. 20231

APPLICATION NO.	FILING DATE	FIRST NAMED INVENTOR	ATTORNEY DOCKET NO.
09/034,773	03/02/98	WILLIAMS H	03359.P004

LM01/1228
BLAKELY SOKOLOFF TAYLOR & ZAFMAN
SEVENTH FLOOR
12400 WILSHIRE BOULEVARD
LOS ANGELES CA 90025

EXAMINER	
GECKIL,M	
ART UNIT	**PAPER NUMBER**
2756	6

DATE MAILED: 12/28/99

Please find below and/or attached an Office communication concerning this application or proceeding.

Commissioner of Patents and Trademarks

PTO-90C (Rev. 2/95) U.S. G.P.O. 1999 460-693 1- File Copy

Office Action Summary

Application No.	Applicant(s)
09/034,773	Henry R. Williams Jr.,
Examiner	**Group Art Unit**
Geckil	2756

---The MAILING DATE of this communication appears on the cover sheet beneath the correspondence address---

Period for Response

A SHORTENED STATUTORY PERIOD FOR RESPONSE IS SET TO EXPIRE 3 (three) MONTH(S) FROM THE MAILING DATE OF THIS COMMUNICATION.

- Extensions of time may be available under the provisions of 37 CFR 1.136(a). In no event, however, may a response be timely filed after SIX (6) MONTHS from the mailing date of this communication.
- If the period for response specified above is less than thirty (30) days, a response within the statutory minimum of thirty (30) days will be considered timely.
- If NO period for response is specified above, such period shall, by default, expire SIX (6) MONTHS from the mailing date of this communication .
- Failure to respond within the set or extended period for response will, by statute, cause the application to become ABANDONED (35 U.S.C. § 133).

Status

☒ Responsive to communication(s) filed on 3/2/98.

☐ This action is **FINAL.**

☐ Since this application is in condition for allowance except for formal matters, **prosecution as to the merits is closed** in accordance with the practice under *Ex parte Quayle*, 1935 C.D. 1 1; 453 O.G. 213.

Disposition of Claims

☒ Claim(s) 1-31 is/are pending in the application.

Of the above claim(s)_____ is/are withdrawn from consideration.

☐ Claim(s)_____ is/are allowed.

☒ Claim(s) 1-31 is/are rejected.

☐ Claim(s)_____ is/are objected to.

☐ Claim(s)_____ are subject to restriction or election requirement.

Application Papers

☐ See the attached Notice of Draftsperson's Patent Drawing Review, PTO-948.

☐ The proposed drawing correction, filed on_____ is ☐ approved ☐ disapproved.

☐ The drawing(s) filed on_____ is/are objected to by the Examiner.

☐ The specification is objected to by the Examiner.

☐ The oath or declaration is objected to by the Examiner.

Priority under 35 U.S.C. § 119 (a)-(d)

☐ Acknowledgment is made of a claim for foreign priority under 35 U.S.C. § 11 9(a)-(d).

☐ All ☐ Some* ☐ None of the CERTIFIED copies of the priority documents have been

☐ received.

☐ received in Application No. (Series Code/Serial Number)_____.

☐ received in this national stage application from the International Bureau (PCT Rule 1 7.2(a)).

*Certified copies not received:_____.

Attachment(s)

☒ Information Disclosure Statement(s), PTO-1449, Paper No(s). 4,5

☐ Interview Summary, PTO-413

☒ Notice of References Cited, PTO-892

☐ Notice of Informal Patent Application, PTO-152

☒ Notice of Draftsperson's Patent Drawing Review, PTO-948

☐ Other_____

Office Action Summary

U. S. Patent and Trademark Office
PTO-326 (Rev. 3-97)

*U.S. GPO: 1997-417-381/62710

Part of Paper No. 6

1. Claims 1-31 are presented for examination.

2. The following is a quotation of 35 U.S.C. 103(a) which forms the basis for all obviousness rejections set forth in this Office action:

> (a) A patent may not be obtained though the invention is not identically disclosed or described as set forth in section 102 of this title, if the differences between the subject matter sought to be patented and the prior art are such that the subject matter as a whole would have been obvious at the time the invention was made to a person having ordinary skill in the art to which said subject matter pertains. Patentability shall not be negatived by the manner in which the invention was made.

3. Claims 1-31 are rejected under 35 U.S.C. 103(a) as being unpatentable over Syeda-Mahmood.

4. Syeda-Mahmood (5,920,856) taught the invention substantially as claimed (e.g., as in the exemplary claim 5) including a processing system for providing a plurality of users or clients (3) with information stored remotely over a network, the system comprising:

a) a first user interface or browser for enabling each of a plurality of clients to define a different corresponding set of search rules applicable to a predefined subject or user query (e.g., see column 5 line 41 et seq, column 6 line 51 et seq, column 7 line 20 et seq, e.g. see for example column 6 lines 54-55 for "rules") ;

b) a search agent configured to receive each set of search rules and to automatically retrieve information on only the predefined subject or user query and store or save the retrieved

information on a meta-database (e.g., see column 5 line 41 et seq, column 6 line 40 et seq, column 7 line 15 et seq, and column 9 lines 34-37); and

c) a second user interface or browser for enabling each of the plurality of users to access from the database a portion of the information on the predefined subject or user query associated with the corresponding set of search rules (e.g., see column 5 line 41 et seq, column 6 line 40 et seq, column 7 line 15 et seq, and columns 9-10.)

5. It would have been obvious to one of ordinary skill in the networking art at the time of the invention that the claimed invention differed from the teachings of Syeda-Mahmood only by a degree. Syeda-Mahmood did not label the meta-database as local database or the clients as local clients but this is a system dependence difference. One may run the web server anywhere depending on the needs of the organization or individual and the skill of the person. For example, examiner runs a web site at http://www.geckil.com. Examiner runs a web server there. While the web server is accessible to the web clients like Netscape running on remote computer system, the same web server is also accessible locally from the same computer system it runs on to local users in the LAN. So in the Internet paradigm the local and the remote is no more than semantics. Web server is accessible to all whether it be local or remote. Claims are broadly drawn to read on a plurality of well known systems. For example, nowhere in the specification is there any teachings as to what the search rules are, e.g., whether they are boolean logic rules or ranking or relevance rules or proximity operators or whatever. Specification only states that it is search

rules. In the absence of specific teachings examiner will apply the broadest scope to this phrase. For example, using proximity operators like "near" or so many words or characters away from the search term is well known for decades. Our database system has been utilizing these tools many many years along with the many many other search systems well known and available on the market. It appears that the applicant invention is directed saving the queries submitted to remote databases for reuse but Syeda-Mahmood was exactly directed to the same goal. Even though Syeda-Mahmood's system was based on image search engine, this is no more than a degree in difference. Syeda-Mahmood's system also performed textual searches. The heart of the problem solved was saving and using the queries. It is advised that applicant in response to this office action substantially narrow down the scope of the base claims in order to pass the application into a successful allowance stage.

6. The prior art made of record and not relied upon is considered pertinent to applicant's disclosure.

Vora et al (5,819,273) taught a search agent which performed narrow searches on selected topics (see figures 9-12.)

Sameer Madan taught features of the SearchPad utility program including using a set of search rules which minimizes the manual inspection of the search results.

Rogers et al (5,974,441) taught a Java based search system which submitted search requests to a plurality of databases and collected the results and formatted and saved them so that they could be accessed via browsers (see figure 9 and column 19 lines 10 et seq.)

7.Any inquiry concerning this communication or earlier communications from the examiner should be directed to Mehmet Geckil whose telephone number is (703) 305-9676. The examiner can normally be reached on Monday through Friday from 6:30 A.M. to 3:00 P.M..

If attempts to reach the examiner by telephone are unsuccessful, the examiner's supervisor, Frank Asta, can be reached on (703) 305-3817. The fax phone number for the organization where this application or proceeding is assigned is (703) 305-9564.

Any inquiry of a general nature or relating to the status of this application or proceeding should be directed to the Group receptionist whose telephone number is (703) 305-3900.

Any response to this action should be mailed to:

Commissioner of Patents and Trademarks

Washington, D.C. 20231

or faxed to:

(703) 308-9051, (for formal communications intended for entry)

Or:

(703) 308-5359 (for informal or draft communications, please label "PROPOSED" or "DRAFT")

Hand-delivered responses should be brought to Crystal Park II, 2021 Crystal Drive, Arlington. VA., Sixth Floor (Receptionist).

12/23/99

MEHMET B. GECKIL
PRIMARY EXAMINER

Mehmet Geckil

FORM PTO 948 (REV. 11-97) U.S. DEPARTMENT OF COMMERCE-Patent and Trademark Office Application No. 09/034,776

NOTICE OF DRAFTPERSON'S PATENT DRAWING REVIEW

The drawing filied (insert date) 3/2/98 are:

A. _____ not objected to by the Draftperson under 37 CFR 1.84 or 1.152.

B. X objected to by the Draftperson under 37 CFR 1.84 or 1.152 as indicated below. The Examiner will require submission of new, corrected drawings whe necessary. Corrected drawings must be submitted according to the instructions on the back of this notice.

1. DRAWINGS. 37 CFR 1.84(a): Acceptable categories of drawings: Black ink. Color.
   - _____ Color drawing are not acceptable until petition is granted. Fig.(s) _____
   - _____ Pencil and non black ink is not permitted. Fig(s)_____
2. PHOTOGRAPHS. 37 CFR 1.84(b)
   - _____ Photographs are not acceptable until petition is granted,
   - _____ 3 full-tone sets are required. Fig(s)_____
   - _____ Photographs not properly mounted (must brystol board or photographic double-weight paper). Fig(s)_____
   - _____ Poor quailty (half-tone). Fig(s)_____
3. TYPE OF PAPER. 37 CFR 1.84(e)
   - _____ Paper not flexible, strong, white and durable. Fig.(s)_____
   - X Erasures, alterations, overwritings, interlineations, folds, copy machine marks not acceptable. ~~(too thin)~~
   - _____ Mylar, vellum paper is not acceptable (too thin). Fig(s)_____
4. SIZE OF PAPER. 37 CFR 1.84(F): Acceptable sizes:
   - _____ 21.0 cm by 29.7 cm (DIN size A4)
   - _____ 21.6 cm by 27.9 cm (8 1/2 x 11 inches)
   - _____ All drawings sheets not the same size. Sheet(s)_____
5. MARGINS. 37 CFR 18.4(g): Acceptable margins:
   Top 2.5 cm Left 2.5 cm Right 1.5 cm Bottom 1.0 cm SIZE: A4 Size
   Top 2.5 cm Left 2.5 cm Right 1.5 cm Bottom 1.0 cm SIZE: 8 1/2 x 11
   - X Margins not acceptable. Fig(s) 5
   - X Top (T) X Left (L)
   - _____ Right (R) _____ Bottom (B)
6. VIEWS. CFR 1.84(h)
   REMINDER: Specification may require revision to correspond to drawing changes.
   - _____ Views connected by projection lines or lead lines. Fig.(s)_____

   Partial views. 37 CFR 1.84(h)(2)
   - _____ Brackets needed to show figure as one entity. Fig.(s)_____
   - _____ Views not labeled separately or properly. Fig.(s)_____
   - _____ Enlarged view not labeled separately or properly. Fig.(s)_____
7. SECTIONAL VIEWS. 37 CFR 1.84(h)(3)
   - _____ Hatching not indicated for sectional portions of an object. Fig.(s)_____
   - _____ Sectional designation should be noted with Arabic or Roman numbers. Fig.(s)_____
8. ARRANGEMENT OF VIEWS. 37 CFR 1.84(i)
   - _____ Words do not appear on a horizontal, left-to-right fashion when page is either upright or turned, so that the top becomes the right side, except for graphs. Fig.(s)_____
   - _____ Views not on the same plane on drawing sheet. Fig.(s)_____
9. SCALE. 37 CFR 1.84(k)
   - _____ Scale not large enough to show mechansim without crowding when drawing is reduced in size to two-thirds in reproduction. Fig.(s)_____
10. CHARACTER OF LINES, NUMBERS, & LETTERS. 37 CFR 1.84(l)
    - X Lines, numbers & letters not uniformly thick and well defined, clean, durable and black (poor line quality). Fig.(s) 1-6
11. SHADING. 37 CFR 1.84(m)
    - _____ Solid black areas pale. Fig.(s)_____
    - _____ Solid black shading not permitted. Fig.(s)_____
    - _____ Shade lines, pale, rough and blurred. Fig.(s)
12. NUMBERS, LETTERS, & REFERENCE CHARACTERS. 37 CFR 1.48(p)
    - _____ Numbers and reference characters not plain and legible. Fig.(s)_____
    - _____ Figure legends are poor. Fig.(s)_____
    - _____ Numbers and reference characters not oriented in the same direction as the view. 37 CFR 1.84(p)(3) Fig.(s)_____
    - X Engligh alphabet not used. 37 CFR 1.84(p)(3) Fig.(s)_____
    - X Numbers, letters and reference characters must be at least .32 cm (1/8 inch) in height. 37 CFR 1.84(p)(3) Fig.(s) 4
13. LEAD LINES. 37 CFR 1.84(q)
    - _____ Lead lines cross each other. Fig.(s)_____
    - _____ Lead lines missing. Fig.(s)_____
14. NUMBERING OF SHEETS OF DRAWINGS. 37 CFR 1.48(t)
    - _____ Sheets not numbered consecutively, and in Ababic numerals beginning with number 1. Fig.(s)_____
15. NUMBERING OF VIEWS. 37 CFR 1.84(u)
    - _____ Views not numbered consecutively, and in Abrabic numerals, beginning with number 1. Fig.(s)_____
16. CORRECTIONS. 37 CFR 1.84(w)
    - _____ Corrections not made from PTO-948 dated _____
17. DESIGN DRAWINGS. 37 CFR 1.152
    - _____ Surface shading shown not appropriate. Fig.(s)_____
    - _____ Solid black shading not used for color contrast. Fig.(s)_____

COMMENTS

REVIEWER A.D DATE 12/8/98 TELEPHONE NO. _____

ATTACHMENT TO PAPER NO. 6

PTO COPY

Notice of References Cited

Application No.	Applicant(s)		
09/034,773	Henry R. Williams Jr.,		
Examiner	Group Art Unit	Page 1 of 1	
Geckil	2756		

U.S. PATENT DOCUMENTS

*		DOCUMENT NO.	DATE	NAME	CLASS	SUBCLASS
	A	5,983,218	11/9/99	Syeda-Mahmood	707	3
	B	5,983,200	11/9/99	Slotznick	705	26
	C	5,974,441	10/26/99	Rogers et al	709	200
	D	5,920,856	7/6/99	Syeda-Mahmood	707	3
	E	5,855,015	12/29/98	Shoham	707	5
	F	5,819,273	10/6/98	Vora et al	707	10
	G					
	H					
	I					
	J					
	K					
	L					
	M					

FOREIGN PATENT DOCUMENTS

*		DOCUMENT NO.	DATE	COUNTRY	NAME	CLASS	SUBCLASS
	N						
	O						
	P						
	Q						
	R						
	S						
	T						

NON-PATENT DOCUMENTS

*		DOCUMENT (Including Author, Title, Source, and Pertinent Pages)	DATE
(1)	U	Sameer Madan, "Search The Web Without a Headache," PC WORLD (India), pp 40-41	2/98
(2)	V	Lingnau et al, "An HTTP-based Infrastructure for Mobile Agents," http://www.w3.org/Conferences/WWW4/Papers/150/, pp 1-15	1995
(3)	W	Patricia Smith, "WebCompass Takes Web Searching in the Right Direction," Seybold Report on Desktop Publishing, Vol:10, no:10, pp 1-9	1996
(4)	X	Egyhazy et al, "Intelligent Web Search Agents," http://csgrad.cs.vt.edu/~tplunket/article.html, pp 1-23	No Date

*A copy of this reference is not being furnished with this Office action.
(See Manual of Patent Examining Procedure, Section 707.05(a).)

U.S. Patent and Trademark Office
PTO-892 (Rev. 9-96)

Part of Paper No. 6

SearchPad Indian Review in PC WORLD (India), pp 40-41
February 1998 Issue
By
Sameer Madan

Search the Web without a headache

With the amount of information available on the World Wide Web growing at such
phenomenal rates, all Net surfers will have noticed how unmanageably large the amount of data is. Thankfully, search engines make the process of finding specific information easier. However, with a multitude of search engines,each with it's own syntax and idiosyncrasy, searching the Web still cannot be taken for granted. The solution, Metasearchers, programs that fire up all search engines for your queries simultaneously, and also hide the specific syntax of each search from the user. Satyam Spark Solutions' SearchPad v1.1 is one such tool, designed to save you time and headaches while you scout the WWW for information of your choice.

SearchPad has the capability to send your query to upto 11 search engines simultaneously considering that AltaVista has been split up into two components, AltaVista(WWW) and AltaVista(Usenet).The other search engines covered are-Yahoo!, Lycos, WebCrawler, InfoSeek, Excite, Magellan, OpenText, Hotbot and Onekey. The one glaring omission here is that Dejanews, which is undoubtedly the finest Usenet archive available on the WWW. The user can choose any combination of the available search engines to submit the query to.

SearchPad comes with so many features that it's a power searcher's delight. The user can specify words and phrases, and group them together with AND, OR and ANDNOT. Apart from this, the search can be performed in such a manner that the keywords / keyphrases being searched for must appear near each other, with the option of specifying that these words/phrases should be separated by most "n" words or "n" paragraphs. In addition, SearchPad also allows the user to specify a set of straight forward rules which really minimize the amount of manual inspection that needs to be done on pages that are returned by Search Engines. These rules enable the user to specify keyphrases, the presence or absence of which can be checked for in the title of the page, the URL of the page, the beginning, ending, or within the document body itself, and accordingly, the page can be accepted or rejected.
I found the ability to specify these rules as the single most useful feature in SearchPad.

Using SearchPad with all these features, I easily found some very

interesting pages which were more difficult to locate with some other metasearchers . Please note that SearchPad did not throw up any new pages that did not turn up with other metasearchers. However, with SearchPad I was able to reduce the effort required in manually inspecting the pages significantly.

While it has its good points, it did give me a fair share of problems as well. The first of these of these was getting started. SearchPad is definitely what I wouldn't classify as an out-of-the-box solution. Having installed and started it, I was at a total loss about what to do with it. This was despite having used numerous metasearchers before. I have like a plain-vanilla interface, in addition to a power-user interface, so as to enable first-time users to simply enter keywords, select the Search Engines to query, and fire away. But the plethora of buttons and fields simply the not indicate that this was possible, and to add to this, the labeling of fields and menu options seemed cryptic, with terms like Feedback, Topic,Query is Hot, Classification, etc. It took a good one hour to go through the entire manual to figure out what I needed to specify and what safely ignore, in order to trigger a simplistic query. It then took some more experimentation to figure out how to use the advanced features. SearchPad seems to take a fair while longer to query all 11 search engines available than some other metasearchers do for querying the same search engines. The one addition that I would have liked to see was a mechanism
for updating a search pad from Satyam's Web Site. In such a case, any changes made by a search engine to it's syntax would be updated on a user's copy of SearchPad. Not having this feature could mean that a particular search engine might become inaccessible as far as SearchPad is concerned. This should be a definite consideration in the next release of SearchPad.

With the price of Rs.3995 ***, SearchPad seems a little pricey as compared to other metasearchers that are available at a much lower price, and also requires a fair amount of learning time for figuring out how to use this package.

*** Please Note :The software now costs Rs.2500.00.

salesinfo@bet.satyam.com.
SearchPad is a trademark of Satyam Computer Services Ltd
Copyright © 1997 Satyam Computer Services Ltd

An HTTP-based Infrastructure for Mobile Agents

Anselm Lingnau
Oswald Drobnik
Peter Dömel

Abstract:

Mobile agents are an emerging technology attracting interest from the fields of distributed systems, information retrieval, electronic commerce and artificial intelligence. We present an infrastructure for mobile agents based on the Hypertext Transfer Protocol (HTTP) which provides for agent mobility across heterogeneous networks as well as communications among agents. Our infrastructure supports the implementation and interoperation of agents written in various languages and takes advantage of current research in HTTP and the World Wide Web in general.

Keywords:

mobile agents, infrastructure, HTTP

Introduction

Recent times have seen exciting new developments in computer networking. Applications like the World Wide Web have made computer networks such as the Internet available (and palatable) to users outside of computer science departments all over the world. Information servers offering all sorts of interesting data are cropping up, and, as researchers are trying to find ways of reliable electronic payment, the net will soon be important as a `virtual marketplace'.

Yet the sheer amount of data available to users in such a network will be difficult to handle. How will they be able to locate the information they need? How are they going to find the best offer for some service they require? One possible solution brought forward to help in this situation consists of `mobile agents' - autonomous programs that move about the network on behalf of their owners while searching for information, negotiating with other agents, or even concluding business deals.

In this paper we propose an infrastructure for such agents. This infrastructure allows agents to move between hosts and communicate with other agents; it supports agents written using diverse languages and lets agent programmers implement a variety of interaction schemes based on a general mechanism for agent communication. Our agent infrastructure uses the *Hypertext Transfer Protocol* (HTTP) [2] for agent transfer and communication, taking advantage of this widely accepted, platform-independent mechanism to make it as easy for providers to offer agent-based services as for users to access them. We also expect future advances in, e.g., HTTP security and electronic payment resulting from the World Wide Web research community to save considerable

effort which would otherwise be necessary to implement such in some separate framework for mobile agents.

Mobile Agents

The term *agent* means many things to many people. This section defines a (mobile) agent for our purposes and gives a general overview of agent technology.

What Is an Agent?

According to our dictionary [22], an agent is `anyone who acts on behalf or in the interest of somebody else'. Agent-based systems have recently gained considerable attention in computer science, although nobody has come up yet with a reasonably succinct definition of what an `agent' is actually supposed to be in this context. For the purposes of this paper, we assume that an *agent* is a computer program whose purpose is to help a user perform some task (or set of tasks). To do this, it contains persistent state and can communicate with its owner, other agents and the environment in general. Agents can do routine work for users or assist them with complicated tasks; they can also mediate between incompatible programs and thus generate new, modular and problem-oriented solutions, saving work.

Tasks that seem to be amenable to agents include electronic mail handling (an agent helps with prioritizing, forwarding, deleting, archiving, ...of mail messages [10]), scheduling of meetings (the people involved run agents that will negotiate a date and time, reserve a conference room etc.) or filtering an information source such as Usenet news for interesting bits according to various rules or heuristics.

Since agents consist of program *code* and the associated internal *state*, we can envision *mobile agents* which can move between computers in a network. An obvious application of this idea is in information retrieval, where it is easy to picture a mobile agent that gathers interesting data on some computer. If it has gone through all the available data, it moves somewhere else in order to find out even more tidbits before returning to its `owner' loaded with pertinent information. Of course the same information could be retrieved by the owner's computer itself using some suitable mechanism for remote access. The advantage of the agent-based approach is that complex queries can be performed by the agent at the remote side without having to transfer the raw data to the owner's computer first, which would likely waste considerable bandwidth. Other applications of mobile agents include active documents, electronic commerce (a hot topic in itself as far as the World Wide Web is concerned), network management, control of remote devices and mobile computing.

It is important to emphasize that, even if an environment supports mobile agents, agents are not *required* to move about. There may be agents for which there is no point in mobility, or others which are just too big. However, if the environment allows agents to communicate, mobile and

stationary agents can fruitfully work together on behalf of their owners.

Related Work

The interest in agents is fueled by the AI community as well as by researchers in the fields of distributed computing and communications. AI researchers tend to think of agents as entities that can observe and reason about the goings-on in their environment, while distributed computing scholars consider agents a new way of structuring distributed computer systems.

An overview of agents and, in particular, agent communication from the point of view of AI research is given by Genesereth and Ketchpel [12]. Kirn and Klöfer [21] discuss the applicability of organization theory to agent systems and examine their potential for `compound intelligence', while Kautz, Milewski and Selman [20] take a look at how agents can assist and simplify person-to-person communication. As an example of concrete experiments with AI-based agents, Etzioni and Weld [10] present a stationary agent (*softbot*) which helps its owner access Internet resources. It is of course legitimate to ask whether mobile agents are worth the trouble at all; this question is discussed by Harrison, Chess and Kershenbaum [16]. Eichmann [9] examines the issue of ethics for agents (including stationary `Web crawlers' or `spiders') on the Web.

Requirements for an agent infrastructure (or *agent meeting point*) are considered by Chess *et al.* [7]. Goldszmidt and Yemini [13] extend the notion of an agent infrastructure to encompass real-time control and system management. A proprietary agent infrastructure is described by White [26,27]. Proposals abound for agent implementation languages: (Safe-)Tcl [6,23], Java [14,18] and Telescript [27,28] seem to be some of the more important contenders.

An Infrastructure for Mobile Agents

In this section we consider the requirements that mobile agents place on the systems they're running on, and vice-versa.

Why Do Agents Need an Infrastructure?

To be useful, an agent needs to interact with its host system and other agents - it must access information that the host offers or negotiate with other agents about the exchange of services. Agents must also be able to move within heterogeneous networks of computers. This is only possible if there is a common framework for agent operations across the whole network: a standardized *agent infrastructure*. This infrastructure must offer basic support for agent mobility and communications. It must also protect the host from unauthorized access by agents and safeguard the agents' integrity as well as possible.

An Architecture Model

The basis of our architecture model for an agent infrastructure is the notion of an *agent server*. This is a program (like a mail server, FTP server, ...) which runs on every computer that will be accessible to agents and is in charge of the agents running on that computer. Its tasks include accepting agents, creating the appropriate runtime environments, supervising the agents' execution (in the meantime answering queries about their status) and terminating them if so directed. The agent server must also organize agent transfer to other hosts, manage communications among agents as well as between agents and their owners and do authentication and access control for all agent operations. In a network of agent servers, each individual server may be expected to participate in management operations such as the gathering of usage statistics.

We assume that each agent server knows about other agent servers in its `neighbourhood' and makes this information available to agents, who use it to pick a new destination when they decide to leave the host. Such `neighbours' do not have to be physically close to one another - for example, an agent server on a host which specializes in bibliographic databases could tell an agent about other servers that offer similar information. Thus no server (or agent) needs to know the topology of the whole network; if each server knows about its own vicinity, an agent will still be able to traverse an `interesting' subset of all servers. As a refinement, the list of neighbours presented to an agent can be customized according to the origin or purpose of the agent. That way, `firewall' schemes or domain boundaries can be realized.

For each agent running on a server, there is a dedicated *runtime environment*. The runtime environment interfaces between the agent and its host by making resources available to the agent in a controlled way.

The user interacts with the agent infrastructure through a *client*. The client will let the user submit an agent for execution, find out about its status, stop or recall it and perform other operations as necessary. It is important to note that the client does not need a permanent connection to the rest of the agent infrastructure; it can, for example, reside on a mobile computer that communicates with the fixed infrastructure via a slow radio link.

The main design guideline for our agent infrastructure is to allow maximum flexibility concerning the implementation of agents, their access to the host system(s) and their communication. We do not want to prejudice our research by constraining, e.g., the language to be used for agent implementation. Furthermore, we are convinced that a general infrastructure for mobile agents must provide `mechanism, not policy' in order to gain wide acceptance.

Figure 1 shows an overview of the various components of our agent infrastructure.

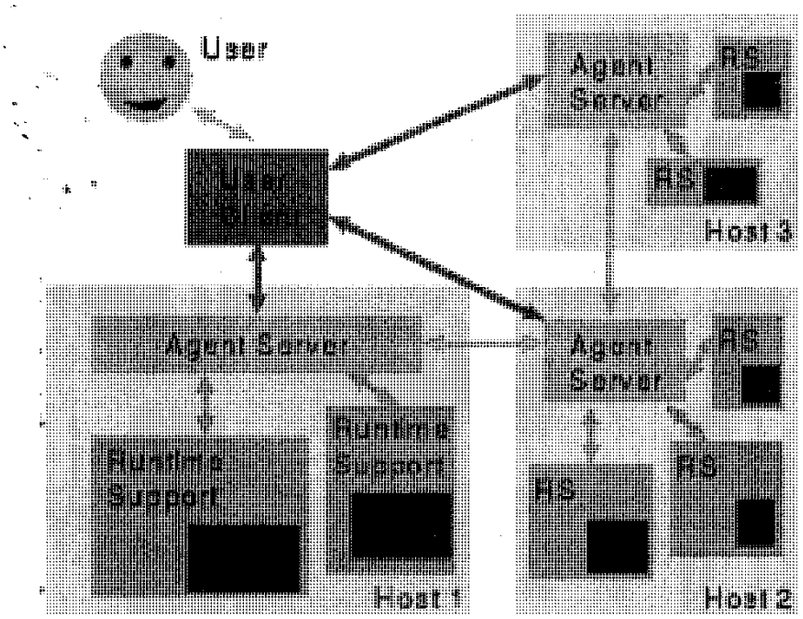

Figure 1: The Architecture Model

A Mobile Agent Dissected

Before delving deeper into the details of agent support, we will examine the structure of a mobile agent more closely. A mobile agent contains

- *Code* - the program (in a suitable language) that defines the agent's behaviour.
- *State* - the agent's internal variables etc., which enable it to resume its activities after moving to another host.
- *Attributes* - information describing the agent, its origin and owner, its movement history, resource requirements, authentication keys, ...for use by the infrastructure. Part of this may be accessible to the agent itself, but the agent must not be able to modify the attributes.

While some languages allow the representation of an agent's state as part of its code (e.g., by inclusion of appropriate assignment statements) we consider this not general enough.

Agent Communications

The model for agent communications in our infrastructure is based on an abstract *information space* which is maintained by each agent server on behalf of the agents in its charge. The information space contains triples consisting of an item's *key* (or name), an *access control list* and the item's *value* (Figure 2).

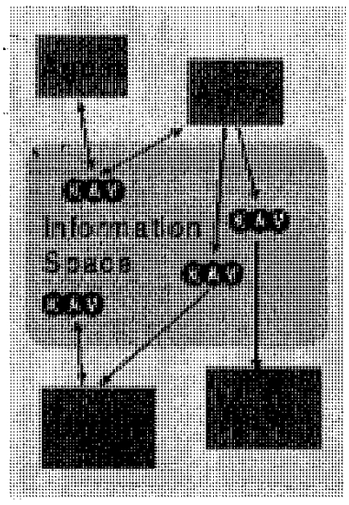

Figure 2: The Agent Information Space

Agents may write items to the information space and read them either destructively or non-destructively; all these operations are supposed to be atomic and serialized in order to avoid race conditions and inconsistency. The operations are enabled for specific agents, groups of agents or all agents according to an item's access control list. More advanced interaction schemes such as RPC can be implemented easily on top of these primitives, or agents can simply publish `facts' in a declarative language (e.g., KIF [11]) for the perusal of others. The agent server uses the information space to volunteer data of general interest, e.g., a list of agents currently running under its control (so agents can get in touch with one another).

While the information space mainly serves as a means of communication among agents, it can also be used for communication between agents and the host system. For example, in a security-conscious environment, a trusted stationary agent could be endowed with the higher privileges necessary to gather some data and hand out summaries to visiting agents via the information space.

An obvious generalization of this approach to communications would be to allow access to a server's information space from agents running on other servers. However, such a `global' information space cannot be arbitrarily scaled up without serious loss of efficiency. Furthermore, it is unclear whether a global information space would lead to a worthwhile increase in functionality when it is easy for agents to move between hosts.

Finally, there should be a way for agents to communicate with their owners. A simple approach is to let the agent send electronic mail back to its owner; this asynchronous method ties in nicely with the fact that the owner is probably not on-line all the time, e.g., in a mobile computing

environment. Synchronous communication is not much more difficult in principle: An agent might want to check back with its owner about some aspect of its operation, so after attracting its owner's attention by sending a mail message it could - in an HTTP-based framework - provide a Web form to be filled out by the owner and suspend itself until a reply arrives.

Runtime Support

An agent server needs to provide runtime support to agents for various reasons: Firstly, agents must be able to take advantage of the agent server for communications and mobility services - therefore suitable primitives must be accessible from the agent implementation language. Secondly, agents are not supposed to misuse their access to the host system by, e.g., collecting its password file for off-site cracking or by formatting the main hard disk. Potentially dangerous operations such as executing arbitrary operating system commands or opening files or network connections must be tightly controlled. A runtime environment can do this by either completely outlawing them or else by vetting their arguments and endorsing an operation only if it is 'harmless'. The most promising approach in this area is Safe-Tcl [5,6], which distinguishes between a *trusted* and an *untrusted environment*. The agent runs in the untrusted environment and may perform *safe calls* into the trusted environment. The trusted environment checks their validity and forwards them to the underlying system if they are acceptable.

It is important to note that the level of trust extended to an agent may vary considerably between agents. For instance, a locally developed agent is likely to be rather more trustworthy than some random piece of code coming in from the network. These different levels of trust can be accommodated by suitable selection of runtime environments, with a more highly trusted agent being allowed more freedom of access to the underlying system.

Using HTTP as a Basis of an Agent Infrastructure

An agent infrastructure needs protocols for agent mobility and communication. Here we explain why the Hypertext Transfer Protocol (HTTP) seems to be a sensible choice.

Why HTTP?

Using HTTP as the basis of an agent infrastructure offers several advantages:

- HTTP is a well-known, well-understood and widely accepted protocol. Popularizing an agent infrastructure will be vastly easier if it is based upon HTTP rather than yet another home-brewed protocol.
- HTTP contains all the necessary primitives to support agent mobility. For example, the `POST` method can be used to submit an agent to a server for execution, and the `GET` method caters for status requests etc. Also, the HTTP specification [2] leaves room for custom extensions, should those turn out to be needed.

- Existing Web browsers like Mosaic can be used for most of the user interface. This saves a lot of work and is convenient for users, who don't have to learn how to use another incompatible tool.
- The Web's platform independence makes it easy to support mobile agents in a heterogeneous network. With Web access available even through lowly PDAs, instant agent-based computing is possible nearly everywhere.
- We can make use of ongoing Web research results on topics like secure transmission via HTTP and electronic commerce. Since one of the more important applications envisioned for mobile agents is to send them out shopping, integration with upcoming solutions for digital payment is essential for a viable agent system. Similar reasoning applies to security - it will be much easier to make use of whatever the Web community decides on than to convince everybody that some other approach is working equally well, or even to adapt a Web standard to a completely different environment.
- We will be able to integrate Web-based and agent-based services better if their technical basis is the same to begin with. Thus agent support becomes a `value-added' service that Web providers can offer in a clean and straightforward manner.

We have implemented a prototypical HTTP-based agent infrastructure which offers most of the features proposed in section "An Infrastructure for Mobile Agents". It consists of a custom HTTP server written in Perl [25] and a set of language-dependent modules providing runtime services to agents. We will include some details of our implementation at appropriate places during the following paragraphs; lack of space prevents us from a full discussion within the scope of this paper.

Encapsulation of Agents as MIME Contents

In HTTP, data (request/reply bodies) are transferred in a format based on MIME (Multipurpose Internet Mail Extensions, [4]). For the purposes of agent transport, we define an application-specific MIME-like content type, `application/agent`. This content type carries attributes describing, e.g., the programming language used and the agent *type* (say, library search agent). The agent server uses this information for choosing the right kind of runtime support or rejecting the agent if its requirements cannot be met.

The body of an `application/agent` part contains subparts corresponding to the agent's attributes, code and state (using content types `application/agent-attributes`, `.../agent-code` and `.../agent-state`, respectively). The `agent-attributes` subpart gives agent attributes (see section "A Mobile Agent Dissected") in a form similar to MIME headers (Figure 3). The format of the latter subparts is not specified further; it is assumed that their contents will be defined in a manner appropriate to the programming language used for the agent. If necessary, a suitable content transfer encoding can be applied to any of the subparts, supporting, e.g., agents compiled to some form of byte code.

```
From: lingnau@tm.informatik.uni-frankfurt.de
Date: Thu 13 Jul 1995 12:37:00 +0200
Content-Type: application/agent; boundary="AbCdEfG"; language="tcl
    type="silly"; context="default"

--AbCdEfG
Content-Type: application/agent-attributes

Owner: lingnau@tm.informatik.uni-frankfurt.de
Agent-ID: <a123.950713123700@deneb.tm.informatik.uni-frankfurt.de>
Home-URL: http://deneb.tm.informatik.uni-frankfurt.de:5055/home/a1
Start-Date: Thu 13 Jul 1995 12:34:56 +0200
Expires: Thu 20 Jul 1995 12:34:56 +0200
Log: deneb.tm.informatik.uni-frankfurt.de Thu 13 Jul 1995 12:34:56
    rigel.tm.informatik.uni-frankfurt.de Thu 13 Jul 1995 12:36:13
Authentication-Cookie: * fa389df25671e4a515ca87efda149852
--AbCdEfG
Content-Type: application/agent-code

puts "This is a useless agent"
sleep $sleep if [llength $visit_list} {
    set nextHost [lindex $visit_list 0]
    set visit_list [lreplace $visit_list 0 1]
    agent moveto $nextHost
} else {
    agent quit
}
--AbCdEfG
Content-Type: application/agent-state

set sleep 60
set visit_list {arktur algol}
--AbCdEfG--
```

Figure 3: A MIME-encapsulated agent

Once an agent is encapsulated in a MIME-like message for transport, nothing precludes its being sent by email rather than HTTP. We have not explored this further to date, but there are obvious connections to research into *active mail* [5] which seem worth pursuing.

Agent Transport via HTTP

We have to distinguish two cases: a new agent being submitted to a server for the first time, and an agent moving from server to server of its own accord. In the first case, the server must be established as the *home server* for this agent, which will be keeping track of the agent's progress through the network. In the second case, the home server must be notified by the new server that the agent has moved to a new location.

Generally, an agent is moved by `POST`ing it to a special URL [3] managed by the agent server (*`server`*`/create` or *`server`*`/move`, respectively, in our implementation, where *server* is short for `http://`*`host`*`:`*`port`*). The agent server parses the agent, checks whether it is acceptable according to the server's policies and the agent's requirements as expressed by its attributes, and launches it in an appropriate runtime environment. In the case of a new agent, the client (owner) is returned a new URL identifying the agent for the purpose of status queries (the *home URL* - in our implementation it is of the form *`server`*`/home/`*`id`*, where *id* uniquely identifies the agent on this server); in the case of an agent moving between servers, the target server assigns a temporary *visitor URL* (*`server`*`/visit/`*`id`*) to the agent and `POST`s this to the agent's home URL to notify the home server of the agent's new location.

Our agent server spawns a new process for each agent and its runtime environment. This separates the agent from its peers and the server, increasing security and the flexibility of the runtime support - this approach is instrumental in allowing agents implemented in arbitrary languages. It also makes it possible to take advantage of `resource limits' that the operating system can impose on processes to enforce limitations on the CPU time or memory used by agents.

Once an agent has been submitted to the infrastructure, its owner can query its status by accessing its home URL. Since the home server is kept up-to-date as to the whereabouts of the agent, it can issue an appropriate HTTP code 302 `moved temporarily' response specifying the current visitor URL of the agent. These will be handled transparently by most Web clients, giving the agent owner apparently instantaneous access to the agent. Such a status query returns a HTML document which not only advises the owner of the status of the agent, but also allows more detailed examination of attributes or part of the state (for example, a partial result) via links to special URLs. In our implementation, URLs like *`visitorURL`*`/attributes` or *`visitorURL`*`/state` are used for this purpose; again, these can be accessed via the home URL by redirection. More URLs are available for stopping or recalling the agent, e.g., *`visitorURL`*`/recall`.

Agent Communications via HTTP

HTTP lends itself not only to agent transport, but also to agent communications. The `information space' discussed in section "Agent Communications" can be implemented as part of the agent server, accessible via a mechanism similar to other database queries. Information items can be added to the information space by `POST`ing them to a URL (*`server`*`/info?`*`key`*), with the access list information given in an `Access:` entity header. Suitable content transfer encoding

allows values of arbitrary content and size (subject to space limitations on the server) to be entered as the message contents. The GET method is used to read information items, and a DGET method can be introduced into the HTTP protocol to enable atomic `destructive GET' for retrieving and removing an item in a single operation.

Another feature that would be nice to have is the ability of agents to be notified asynchronously of changes in the information space that are interesting to them. For example, an agent may want to be informed when a new agent turns up at the server or whenever a new piece of information has been put into the information space by its `opposite number' during negotiation. While an agent could find out about this by periodically polling the information space, asynchronous notification will be much more efficient. This is not currently implemented by our infrastructure, but work is underway to support this in the near future.

Security Considerations

Security is important in all operations related to the agent infrastructure. We have already discussed the need for protection of host systems from interference by agents and vice-versa. In addition to this, an agent infrastructure must cater for encryption and authentication:

- Agents carry along their complete implementation, which may be of interest to malevolent people. While there seems to be little practical opportunity for protecting an agent's code while it is executing (an ingenious person could simply single-step the process or stop it and analyze its memory), agents can be protected in transit by encryption, for example using suitable public-key schemes between servers. As far as looking at the code of a running agent is concerned, a simple solution may be the introduction of neutral `premises' where agents can meet to, e.g., hold an auction. The trust to be extended to such entities would be quite similar to the current situation with solicitors and other `disinterested' parties.
- It is important to be able to tell whether an agent has been changed (maliciously or through damage) during its transfer from one server to the next. Again, existing schemes for cryptographic hashing and digital signatures offer practical solutions.
- Operations on agents like status queries and agents' interactions with a server's information space must be authenticated. In the first case, we must make sure that only an agent's owner can find out important details about the agent, recall it or kill it. Simple solutions include `magic cookies' - long random strings which are part of an agent's attributes and must be presented by a person in order to gain access to the agent - or digest authentication as proposed by Hostetler *et al.* [19].

  In the second case, we want to restrict access to a server's information space to the agents running on this server. The server and an agent's runtime environment can agree on a magic cookie; since this will never be passed across the network it should be sufficient as a first approximation to provide the needed authentication.

Most of the issues to do with encryption and authentication depend on the security of HTTP transmission. This is a topic which is currently under research; various solutions [1,15,17,24] have been proposed. For the purposes of basic research simple authentication schemes are sufficient; we plan to accommodate whatever approach is eventually adopted by the Web community at large in order to avoid duplication of effort.

Summary and Further Work

Mobile agents have recently generated considerable interest from researchers in distributed systems, electronic commerce, information retrieval, the World Wide Web and AI. To support experiments in this area, we have implemented a low-level infrastructure for mobile agents in an HTTP-based framework. The framework consists of a specialized HTTP server and language-specific modules that provide runtime support to agents written in various languages (we have until now concentrated on Tcl and Perl; others would be straightforward to integrate). Agents can employ various styles of interaction through a common information space as well as take advantage of customized runtime environments for specific tasks at different levels of trust. The framework also allows for stationary agents as a special case, making it possible to construct hybrid systems of agents.

Our aim is now to gain experience in the design, implementation and use of mobile agents based on our infrastructure. Ongoing projects in our group include applications in scheduling meetings and filtering Usenet news; other areas under initial investigation are system monitoring and semantic routing.

Another set of open problems concerns encryption and authentication in our agent infrastructure (section "Security Considerations"). These matters have not yet attracted due attention in our implementation, but in order to promote consistency and avoid duplicate effort we are waiting for a standard for HTTP encryption and authentication to emerge from the World Wide Web community. In the meantime we plan to provide schemes which are sufficient to foil the efforts of `casual' crackers.

Agent navigation still poses a number of questions. How will an agent decide where to go next? Besides semantic routing, the use of hyperspace mapping tools like *WebMap* [8] may help in locating `interesting' places. This is also a topic for future research.

References

1. Anderson, Scot and Rick Garvin, *Sessioneer: flexible session level authentication with off the shelf servers and clients*, *Computer Networks and ISDN Systems*, 27(6):1047-1053, April 1995.

2. Berners-Lee, T., R. T. Fielding, and H. Frystyk Nielsen, *Hypertext Transfer Protocol -*

HTTP/1.0, Internet Draft draft-ietf-http-v10-spec-00, HTTP Working Group, March 1995, Work in progress.

3. Berners-Lee, T., L. Masinter, and M. McCahill, *Uniform Resource Locators (URL)*, RFC 1738, Network Working Group, December 1994.

4. Borenstein, N. and N. Freed, *MIME (Multipurpose Internet Mail Extensions) Part One: Mechanisms for Specifying and Describing the Format of Internet Message Bodies*, RFC 1521, Network Working Group, September 1993.

5. Borenstein, Nathaniel and Marshall T. Rose, *MIME Extensions for Mail-Enabled Applications: application/Safe-Tcl and multipart/enabled-mail*, Distributed as part of the Safe-Tcl 1.2 distribution available over the Internet, November 1993, Working Draft.

6. Borenstein, Nathaniel S., *EMail With A Mind of Its Own: The Safe-Tcl Language for Enabled Mail*, Distributed as part of the Safe-Tcl 1.2 distribution available over the Internet, 1994.

7. Chess, David et al., *Itinerant Agents for Mobile Computing*, IBM Research Report RC 20010 (03/27/95), IBM Research Division, 1995.

8. Dömel, Peter, *WebMap - A Graphical Hypertext Navigation Tool*, In *Proc. 2nd International WWW Conference*, Chicago, IL, December 1994.

9. Eichmann, David, *Ethical Web Agents*, In *Proc. 2nd International WWW Conference*, December 1994.

10. Etzioni, Oren and Daniel Weld, *A Softbot-Based Interface to the Internet*, *Communications of the ACM*, 37(7):72-76, July 1994.

11. Genesereth, M. R., R. E. Fikes, et al., *Knowledge Interchange Format Version 3 Reference Manual*, Logic-92-1, Stanford University Logic Group, January 1992.

12. Genesereth, Michael R. and Steven P. Ketchpel, *Software Agents*, *Communications of the ACM*, 37(7):48-53, 147, July 1994.

13. Goldszmidt, Germán and Yechiam Yemini, *Distributed Management by Delegation*, In *Proc. of the 15th International Conference on Distributed Computing Systems*, pages 333-340, Vancouver, Canada, May 1995. IEEE Computer Society, IEEE Computer Society Press.

14. Gosling, James and Henry McGilton, *The Java Language Environment: A White Paper*, Technical Report, Sun Microsystems, 1995.

15. Hallam-Baker, Phillip M., *Shen: A Security Scheme for the World Wide Web*.

16. Harrison, Colin G., David M. Chess, and Aaron Kershenbaum, *Mobile Agents: Are they a good idea?*, IBM Research Report, IBM Research Divison, March 1995.

17. Hickman, Kipp E. B., *The SSL Protocol*, Draft Memo, Netscape Communications, February 1995.

18. Hohl, Fritz, *Konzeption eines einfachen Agentensystems und Implementation eines Prototyps*, Diplomarbeit, Universität Stuttgart, August 1995.

19. Hostetler, Jeffery L. et al., *A Proposed Extension to HTTP: Digest Access Authentication*, Internet Draft draft-ietf-http-digest-aa-01, HTTP Working Group, March 1995, Work in progress (expires 9/1995).

20. Kautz, Henry, Al Milewski, and Bart Selman, *Agent Amplified Communication*, In *AAAI-95 Spring Symposium on Information Gathering from Heterogeneous, Distributed Environments*, Stanford, CA, March 1995.

21. Kirn, Stefan and Andi Klöfer, *Verbundintelligenz kooperativer Softwaresysteme: organisationstheoretische Grundlagen, Stand der Technik und Forschungsaspekte*, *KI*, 2:20-28, February 1995.

22. *Meyers Enzyklopädisches Lexikon*, Bibliographisches Institut, Mannheim, 1971.

23. Ousterhout, John K., *Tcl and the Tk Toolkit*, Addison-Wesley, Reading, MA, 1994.

24. Rescorla, E. and A. Schiffman, *The Secure HyperText Transfer Protocol*, Internet Draft, Enterprise Integration Technologies, December 1994, Work in progress.

25. Wall, Larry and Randal L. Schwartz, *Programming Perl*, O'Reilly Associates, Sebastopol, CA, 1990.

26. White, James E., *Mobile agents make a network an open platform for third-party developers*, *Computer (IEEE Computer Society)*, 27(11):89-90, November 1994.

27. White, James E., *Telescript Technology: The Foundation for the Electronic Marketplace*, General Magic White Paper GM-M-TSWP1-1293-V1, General Magic, Inc., 2465 Latham Street, Mountain View, CA 94040, 1994.

28. White, James E., *Telescript Technology: An Introduction to the Language*, General Magic White Paper GM-M-TSWP3-0495-V1, General Magic, Inc., 420 North Mary Avenue, Sunnyvale,

CA 94086, 1995.

About the Authors

Anselm Lingnau [http://www.tm.informatik.uni-frankfurt.de/~lingnau/]
Johann Wolfgang Goethe-Universität Frankfurt, Germany
Anselm Lingnau studied computer science at Johann Wolfgang Goethe-Universität and obtained his master's degree in 1993. He is currently working as a researcher in the computer science department's distributed systems/telematics group; his main focus is on database issues in mobile communications, but he is also interested in mobile agents, programming and user environments, and the foundations and applications of the Internet.

Oswald Drobnik
Johann Wolfgang Goethe-Universität Frankfurt, Germany
Oswald Drobnik received his doctorate degree in computer science from the University of Karlsruhe in 1977. After spending a year as a postdoctoral fellow at IBM Th. J. Watson Research Center, he joined the faculty of the University of Karlsruhe in 1981 as a professor for distributed computing systems. Since 1988 he has been Professor of Distributed Systems/Telematics at Johann Wolfgang Goethe-Universität, Frankfurt.

Peter Dömel
[http://www.tm.informatik.uni-frankfurt.de/Mitarbeiter/doemel.html
Johann Wolfgang Goethe-Universität Frankfurt, Germany/General Magic, Inc.
Peter Dömel graduated from Johann Wolfgang Goethe-Universität in 1993 with a master's degree in computer science. After doing research with the University's distributed systems/telematics group in application management, object mobility, Web charting tools, and mobile agents he left in 1995 to work for General Magic, Inc.

Seybold Report on Desktop Publishing, Vol 10, no 10

(3)

- The search is on
- Your agent at work for you
- Personal Edition
- Conclusion
- Quarterdeck Office Systems
- Two contrasting engines
- The RetrievalWare package
- Partners and customers
- What to expect in the future
- Conclusion
- Product Pricing and Platforms
- Excalibur Technologies

WebCompass Takes Web Searching in the Right Direction

THE WORLD WIDE WEB is a wonderfully frustrating information resource. Whether you are looking for the latest weather report, a biography of a historical figure or the specs of a vendor's latest product, you can find it on the Web—if you know where to look, and are tenacious in your pursuit.

Frankly, trying to find information on the Web brings to mind the cliché of searching for a needle in a haystack. The Web has no central index, and there are no rules about how Web pages are titled, organized or categorized. The closest things we have today to central indexes are independent search sites, such as Yahoo, Excite and InfoSeek, each of which has unique classification schemes and search engines. Using this hodgepodge of tools yields inconsistent results; you must continually try several engines, and refine the searches at each, to be confident that you've retrieved the right pages. This is not very time efficient, particularly if you are paying by the minute for access. In the case of the Web, getting there is not half the fun.

It would be nice if a program existed that allowed users to run a single query that would encompass all the search engines, newsgroups and directories on the Web. It would be even better if the search results from each device could be compared and duplicate documents eliminated. Relevance ranking of results and a summary of the documents found would be helpful. Finally, running queries in the background while working on other tasks would be a real productivity boon.

Such programs do exist, and, in fact, several are accessible free of charge on the Net. However, to use them you have to visit an external site and run the queries in real time. There's no way to run the query in the background or save your findings locally.

Enter Quarterdeck's WebCompass Professional. This program, which debuted last fall *(see Vol. 10, No. 4, pp. 11–12)*, runs queries against other search engines in order to perform all the aforementioned tasks, *and* it stores the resulting hits and summaries in a local database.

WebCompass is a Windows product, running under Win95 and Windows 3.1. For this hands-on review, we tested the Win95 version. WebCompass is primarily a search tool, but Quarterdeck bundles with it a Web server and Mosaic browser. Neither are required to operate WebCompass. We did make use of the browser during our tests, but it also works with Netscape Navigator, Microsoft Explorer and other Web browsers.

The search is on

WebCompass's interface is made of mostly graphic elements. We would not call it intuitive, as it takes some trial and error (and some consultation with the online help) to discern exactly which icons do what and what icons send you where. But after a day or two of effort, most software-savvy users will be navigating with relative ease.

To begin a search, the user types the keyword or words in the dialog, then selects the resources WebCompass should search. There are seven search resources from which to select, depending on how widespread you want your search to be. They are grouped by subject—general, technical, sports, news and media. There is also Quarterdeck's own topic database.

The Internet resources are built around 11 Net search facilities and indexes that WebCompass is set up to search. They include *Byte* Magazine, CNN, CNN Sports, Excite, Excite NetNews, Lycos, OpenText, TechWeb, Webcrawler, What's New and Yahoo. Unlike most metacrawlers on the Web, though, with WebCompass you control the places it searches. You are free to add new specific sites, search engines or archives to the list.

Topic Database. The supplied topic database is a built-in database of more than 40,000 topics encompassing a large portion of the Web's content. The Topic Database serves as a good launching point for users whose topic of interest, or a related topic, is included in the database. Any of the topics can be selected and activated, and the topic's query scheme can be edited by the user. We used the Topic database to search on "Weddings." Although there was no specific match to that term, it did return a whole list of helpful related topics about weddings, including "Wedding receptions," Wedding invitations," etc.

Obviously, the subject matter of the topic often lends itself to a certain search resource. For example, if you were searching for field hockey, the sports resources might be all that is required to get the desired results; however, if you were searching on a topic such as Apple Computer, you would broaden your search to include perhaps all of the search resources, knowing that results would be found not only in the technical and NetNews resources, but probably in the mainstream media as well.

It is important to note that while searching all the indexes on the Net does ensure the most complete results, it also takes longer to search and compile the results. Searches can take a few minutes or hours, depending on the topic, the number of resources selected and the speed of your connection.

Once you have entered your query terms and selected what resources the program should search, WebCompass goes to work. After a few moments you will begin to see results in the form of the number of documents found that include your keywords from each of the search engines and indexes used.

You can then click on the resource (a hypertext link) to find out more about the documents cited and to see a list of pages that contain hits. At this point, the only document information available on the list consists of the URL addresses and home-page titles.

The pages are ranked employing probable relevance based on the occurrence of the query terms in the titles and file names supplied by each engine. Duplicate referenecs are eliminated prior to posting the results (a very useful feature when querying more than one resource). You can watch the search progress if you choose, but WebCompass can run in the background while you do other work.

The program performs best on at least a fast '486 with 16 MB of RAM. We ran our version on a Pentium and found that we could run the program and still work in other applications productively, although there was a perceived effect on processing power.

Of course, you can click on any of the documents listed in the search results and go inspect that page, without having to save the query as a topic. So far, WebCompass doesn't sound much different from the other search facilities out there. It is by creating a topic that users can take advantage of one of WebCompass's most distinguishing features: its agent.

Your agent at work for you

After a topic is created (by saving at least one of the documents recovered from your keyword search to your local database) and activated, you can start the intelligent agent. Once activated, the intelligent agent goes out in search of documents based on the activated topic. It runs a summarizing scheme on the documents it retrieves and makes an abstract of each. Since the summary and search process can take anywhere from a few minutes to a few hours depending on the topic and the number of sources being queried, the agent can be set up to query at a set time, for example, overnight.

WebCompass, using Microsoft Access 2.0, will save links (URLs), summaries and statistics relating to specific documents in a local database that can be shared across a network. In effect, the database creates a shared pool of annotated bookmarks. Our only caveat is that most of the error messages we received resulted from database problems. For example, an error occurs if you try to write to the database at the same time as the agent. During one of our trials, our database needed to be repaired periodically; to its credit, Quarterdeck provides a one-click repair procedure that fixed the problem.

As a default, WebCompass does not fetch previously retrieved URLs when you run a topic query. A nice feature of the product is that the time intervals for running new queries and for refreshing previously retrieved pages are controlled independently *(see photo, next page)*. You can also specify how much time the agent should spend querying a topic.

Feeble summaries. Two aspects of WebCompass that differentiate it from other agents are its summaries (or abstracts) and its clusters. Both are useful, but neither is quite as useful as one might hope. Summaries, for example, are not simply extractions of the first paragraph of the document, which is what most Web search engines do. Instead, using technology licensed from Limbex (Marina del Rey, CA), WebCompass

scans the entire HTML page looking for sentences that, statistically speaking, are more likely to reflect the query topic. (The weighting of different factors in the algorithm [location of words, value of synonyms, etc.] is not user-modifiable.) It then pulls the top three or four sentences into a summary, which is stored in the database along with the URL of the source document.

In our experience, these summaries were often more useful than those generated by pulling the first few lines. They often showed, at a glance, a better indication of what the site was about than can be gleaned from just the document's title. However, WebCompass's summaries are a far cry from abstracts created by people.

In the screen shot above, for example, WebCompass pulled the trademark acknowledgment of the Softbank page as the top sentence. The program was fooled by the heavy cluster of buzzwords into thinking this sentence actually conveyed something meaningful about the content of the rest of the page. WebCompass also has difficulty with graphics-laden pages, especially those in which critical content is contained in image maps, not sentences. In general, this product shows just how difficult it is to create abstracts from sentences that were not authored as summaries. Its results do help you decide whether to follow a link, but there is clearly much room for improvement.

Clusters of information. When retrieving documents, the agent also distinguishes the kinds of documents it is retrieving in relation to the topic. Documents are grouped according to "cluster labels" that provide a bit of information about the types of documents in the cluster and serve to further subdivide a topic for easy viewing of results. The cluster label is generated by the agent, based on the document's title. For example, when we searched on "Seybold," one cluster label was devised that included seven documents related to "publications, unix, states, 21st century and trend-setting events" *(see screen shot above, left)*. As more documents are found, more cluster labels and clusters will be generated.

Like summaries, clusters are useful, but they too have their limitations. For example, there are three clusters that arise often in WebCompass. The first is the non-English, numeric cluster that includes documents not containing enough English text to produce a summary, either because there is not enough text or because the text is inside tables or in a foreign language. Second is the Miscellaneous cluster, in which the agent puts documents that it thinks did not closely fit any of the generated groups. Finally, there is the Not Yet Summarized cluster, which includes documents the agent has not yet had time to summarize, either because it hasn't reached that task on its agenda or because it could not make contact with the required Web site in a specified time period. In all three cases, you have to visit each of the linked pages to really find out what's going on.

On the plus side, as the number of retrieved documents grows and a topic becomes difficult to manage, any cluster can be made into a separate topic itself or added to an existing topic. Of course, clusters also can be deleted.

Document information. Besides the summary information, other information can be gleaned from the search results. Each summarized document contains a hypertext link to the Document Detail Page. The Detail Page includes a hypertext document title, which is linked to the page itself; the URL address of the related page; the number of links and images in the related document; a page rating supplied by WebCompass and an option for you to rate the page; a longer abstract of the document; and, finally, statistical information, including when the most recent agent summary was done and the number of visits to the document.

Your database of topics can be edited at any time. Not only can topics be added or deleted and their scope modified, the document abstracts can be edited, and notes can be added to the summaries for other users to see why you think a document is particularly relevant or not to a topic.

Personal Edition

For those who do not need the multiuser features of WebCompass, Quarterdeck has announced a scaled-down Personal Edition. Due out next month, it will probably cost half the price of the full product and will lack the user database for saving information. Simply put, PE offers the metasearch capabilities, but not the data manipulation or agent options. Even though the Personal Edition runs on lower-power machines, sacrificing the real value of the product to save $50 does not strike us as a bargain.

Conclusion

As the Web grows, both in terms of the amount of information posted and the number of users online daily, the need to be able to find the information you want in a timely fashion becomes increasingly difficult. The information overload challenge is being addressed on the Web in several ways. There are sites that have people classifying, rating, categorizing and linking to other Web sites. These are usually useful, as human judgment has been applied. But as the number of Web pages mushrooms, it is impossible to keep up with all of the new material. Training machines to search out and index new pages (Web crawlers) have proven an effective method of expanding your search. We are now seeing the second generation of these tools combining classification with full-text indexing, improving the query interface, querying multiple indexes and doing a better job of ranking and sorting the results.

Quarterdeck has taken this progression a step farther with WebCompass. It is not just a metacrawler; it is one that runs when you want it to,

against the indexes you choose. It does not merely rank results; in addition, it attempts to summarize the document. And, best of all, it lets you and your colleagues create a shared pool of clustered topics with annotated bookmarks for your Web browser.

We expect other companies to follow suit with their search programs. But for now, WebCompass's features and $100 price are hard to beat. We recommend it to anyone who relies on the Web as an information resource, especially those who regularly search both public and private Webs for information about specific topics. This product can not only help you find up-to-date information today, but also help keep you pointed in the right direction the next time you want to find something similar.

Patricia J. Smith

Quarterdeck Office Systems

Pico Blvd.

Santa Monica, CA 90405

Phone (310) 392-9851

Fax (310) 314-3218

Internet: www.qdeck.com

Excalibur's RetrievalWare
Looks for Patterns and Meanings

PERHAPS YOU remember the song lyric, "One fist of iron, the other of steel, if the right one don't get ya then the left one will"? That's one way to look at the rationale behind the corporate merger last July between Excalibur Technologies and Conquest. Separately, the two firms had developed two rather different indexing and retrieval methods: Excalibur's Adaptive Pattern Recognition Processing (APRP) and Conquest's Semantic Network. But recognizing the potential of combining the complementary products, the two firms merged and have since united their products into a single family, called Excalibur RetrievalWare.

With $18.7 million in revenues in the past fiscal year, Excalibur, like competitor Verity, is looking for the key to profitability. Last year it generated a net loss of $884,000 despite substantial revenue growth. With the merger and its associated costs completed and the two technologies packaged together in the RetrievalWare engine, Excalibur, now with 110 employees, believes it has the magic sword of synergy as it attacks the expanding market for content-based full-text retrieval with new product offerings for electronic publishing, the Internet and corporate intranet document management systems.

This article presents an overview of RetrievalWare: its features, applications and future directions.

Two contrasting engines

The APRP engine finds words by looking for similar patterns at the binary level, rather than indexing words as character strings, as a typical search engine would do. As an indication of how different this approach is, this pattern recognition methodology, developed originally by Excalibur's 1980 founder and current "chief scientist," James Dowe III, is being adapted to search nontext data also, where the bit streams represent photos, fingerprints or video clips. In contrast, the Semantic Network knows volumes, literally, about the relations among the meanings of English words.

Excalibur premerger: EFS indexes dirty data. Prior to the merger, Excalibur was known for its EFS (Electronic Filing System), a document imaging system developed in the late 1980s for DEC VMS and Ultrix systems. EFS combines optical character recognition with the fuzzy pattern recognition capability of APRP to provide departmental full-text retrieval of scanned documents *(see photo, p. 14)*. In EFS, paper pages, such as technical manuals or litigation briefs, are scanned as bitmapped image files. The resulting images are then matched to the ASCII text resulting from the OCR process. To allow users to search for documents by content, Excalibur's EFS indexes the full text of the OCR-generated files. Because it looks at the bit representation of words, not the actual characters, Excalibur's system was known for successfully finding relevant documents, despite misspellings resulting from OCR errors. Thus, the big payoff in EFS is that APRP not only indexes the document contents automatically (as any full-text indexing tool would do), but does so without the labor-intensive, and costly, step of cleaning up the OCR errors.

Conquest's legacy: linguistic smarts. On the Semantic Network side, Excalibur's merger partner, Conquest, captured the industry's

attention with its Conquest search engine, a "natural language" search tool. For most vendors, "natural language" means that users can type queries as phrases or sentences instead of in Boolean syntax. Conquest does that, but it means by "natural-language processing" that its engine has built-in knowledge of semantic relationships among the meanings and uses of English words. At the heart of the Semantic Network module, in fact, are several complete English-language dictionaries and thesauruses, which are mapped into a large fabric of word associations. Conquest's technology not only lets you construct a query, such as "What oil stocks are rising," but also lets you distinguish, before you run the query, which different meanings of stock the engine should pay attention to or ignore.

This Semantic Network information base is designed in part to expand a search to include terms related in meaning to the query terms, as a corrective to the problem that conventional Boolean techniques miss many of the relevant documents because they do not use the specific vocabulary the searcher used. The built-in knowledge base contains over 400,000 word meanings and over 1.6 million word relationships. The semantic model Conquest developed allows terms to be mapped into "semantic space" and thereby measures how close any two terms are in meaning as "distance in semantic space." Thus the application developer or user has tools to tune a search according to how close in meaning to the query terms the words and phrases in the indexed documents must be.

Examples of word relationships described in the Conquest and now Excalibur RetrievalWare semantic network include:

- ***Synonyms.*** The word "happy" is synonymous with glad, lighthearted, joyous, joyful.
- ***Antonyms.*** Happy is the opposite of sad.
- ***Related words.*** Happy is related to mirthful, merry, jovial, jolly, jocund, hilarious, gleeful.
- ***Contrasted words.*** Happy contrasts with woeful, sorrowful, melancholy, downcast.
- ***Child of.*** Sphere is a child of the concept geometric volumes.
- ***Parent of.*** Sphere is a parent of the concepts globe and soccer ball.
- ***Part of.*** Foundation is a part of the concepts structure and construction.
- ***Contains part of.*** Automobile contains parts of the concepts accelerator and throttle.

A synonym link is given a higher weight than an antonym link. Each type of link, in fact, can be weighted to generate the "semantic distance" information, used ultimately to estimate how relevant are the words in a document to a query. In several of its search modes, the Conquest engine allows setting the level of expansion. For example, the use of only "strong synonyms" could be specified; at this level, 4, the search term "downturn" would also pick up "decline" in the documents it was searching. At level 5, synonyms, it would also pick up "dip, downslide, downswing, downtrend, drop, falloff, sag, slide, skip and slump." At level 8, related terms, it would find "lapse, decrease, depression, drop off, loss, lowering and sell off." The operator could choose to expand a strong synonym for downturn, such as decline, to its closely related terms, such as diminish and decay.

Perhaps at least as important as its ability to expand a search for greater recall, the Semantic Network approach as implemented in RetrievalWare provides tools to narrow a search for greater precision. Where ambiguity is encountered, as is frequent in English, it invites users to click on the specific sense of meaning they had in mind with a particular query term: In this instance, does "ball" mean a spherical object or a formal dance? The query mode can be set to expand all meanings automatically to a given level or, in expert mode, to expand only the selected meanings of query terms to the level that has been set.

With this fine-tuning, the semantic network may yield more accurate results than the general thesaurus modules of competing vendors. By supplying the prebuilt semantic network, RetrievalWare is also more practical for many applications than the labor-intensive, custom-created vocabulary trees or "topics" that Verity pioneered for its version of concept searching. The Semantic Network, too, is used to support a sophisticated morphological expansion of search terms—finding words with the same roots but different endings or other transformations. Because it knows about irregular English verbs, plurals and other variations, the semantic engine can, at least in theory, apply better "stemming" rules than other, less linguistically informed search engines.

In addition to its Semantic Network model and data, Conquest also brought to the merger its multiple-processor client-server architecture. It is one that scales up very well to handle effectively many users and very large text repositories. The combination of accuracy and scalability fits well with the new RetrievalWare prime target, which is large text-searching applications, whether these applications are for online publishing or corporate or government document bases. As Bruce Lawhorn, Excalibur's product manager for text products put it, "When you have terabytes of data, as high-end unstructured data/text retrieval systems do today, accuracy isn't an option. Users can't read through thousands of document descriptors in a result list. Using natural-language semantic network information brings back the most relevant documents in those kinds of applications."

It is not a simple matter to substantiate such claims, because accurate text searching involves the search strategies of users in refining a query as well as the effectiveness of the engine's algorithms, and may give different comparative results on the two aspects of accuracy—precision (the ability to retrieve only relevant documents) and recall (the ability to retrieve all relevant documents), with different document collections or information targets. Most retrieval vendors appear convinced that combining Boolean, semantic, syntactic (at least morphological, such as awareness of plurals, verb endings etc.) and statistical approaches in various mixes offers the best hope of archiving recall and precision, finding all the information you want and only the information you want. As alternatives, human-assigned keywords and subject classifications

still have their place, as well, as can be seen by looking at the various services that help Net and Web users find resources.

With semantic approaches, if you are searching in a universe of a single natural language, it makes sense that Excalibur's very general and detailed database of word-meaning relations should be useful in helping students do homework assignments, as in Electric Library, but that it might be less useful for searching, say, Microsoft's Web site for technical information. The same is true of a general thesaurus module, though the connections in it are less tunable by the user than Excalibur's semantic network. Construction of specialized thesaurus or topic modules for professions where the vocabulary has a certain stability, but a complexity that is not covered in standard dictionaries, also makes sense. For rapidly changing fields, however, it is hard to keep up with the changes in vocabulary, and therefore difficult to succeed with topic construction or specialized thesauruses. For that approach, the "growing tip" of the information corpus may be exactly what interests online searchers the most. Here, the use of statistical methods that detect new patterns of terminology usage would seem to offer worthwhile solutions.

The RetrievalWare package

RetrievalWare, introduced last October, folds the Pattern and Semantic engines into one core text-server product. This is then packaged with a variety of additional modules into specific product offerings. The RetrievalWare product lineup is evolving to accommodate the needs of electronic publishers and corporate document repository systems in the age of client-server architectures, the Internet and CD-ROM.

Currently, there are RetrievalWare offerings that run on Unix and NT servers, with Windows, Mac, Unix and HTML browser clients *(see sidebar for pricing)*. Like PLS and Fulcrum, Excalibur tends to stress features that would make its retrieval products effective and attractive in a high-performance corporate information system or online information service. In Excalibur's case, these features include strong support for encryption and security, links to fielded data stored in popular relational database formats and a multiplicity of API hooks and tools for customization at a variety of levels. The RetrievalWare engine has been designed for scalability to support thousands of users and allow distributed processing across multiple servers.

Like Fulcrum, Excalibur provides a Visual Basic Windows client for its product. This may be modified by customers, integrators or OEMs to add custom functions.

RetrievalWare's techniques in locating desired documents are not limited to its two ancestral search methods. It can also utilize Boolean logic and queries, or statistical techniques, if the user prefers. It supports, as add-ons to the general dictionary database, specialized professional vocabulary trees for medical, legal and financial applications, plus user-personalized concepts. Examples of optional vertical knowledge bases are the McMillan Legal Thesaurus and the MetaThesaurus from the National Library of Medicine. In large organizations, layered dictionaries can be designed for an enterprise, with everyone having access to the general English database, and then vertical, enterprise, workgroup and user levels each adding a specific vocabulary and a network of associations.

With RetrievalWare, Excalibur covers the gamut of search methodologies. While all of its major competitors recognize the value of multiple approaches (most offer statistical and Boolean methods), none currently offer pattern recognition or as large a prebuilt semantic network.

RetrievalWare SDK. The RetrievalWare software developer's kit includes generic user interfaces in the form of source code for client software that runs under Windows Visual Basic and Motif. The SDK also comes with Visual Basic Custom Controls and dynamic link libraries for linking to relational databases. The API set includes engine-level and client-server APIs, as well as the high-level ones. Integrators and OEMs can embed RetrievalWare search capabilities in their applications.

Supported document formats. RetrievalWare indexes text in many native file formats and uses MasterSoft filters to view those files as ASCII text with hit highlighting and search-term navigation. The Web version, outlined below, indexes HTML and is able to store the tags in fields.

For SGML documents, RetrievalWare can translate SGML tags into RetrievalWare fields and employ this information to format the document for display. In its forthcoming 5.2 release, Excalibur has added attribute support.

The current release of RetrievalWare indexes PDF files but displays them in unformatted ASCII form. A release due this fall will display the pages in Acrobat with search terms highlighted.

Web products. The RetrievalWare Web Server links to Unix and Windows NT HTTP servers through CGI scripts. It is accessed via standard browsers and is delivered with an interface kit containing a series of HTML templates, with a macro substitution language to allow Web-page customization without Perl or other programming. Excalibur's RetrievalWare Web Server includes both semantic and pattern indexing and includes a dedicated front-end server to speed handling of large volumes of queries. The Web Server search engine includes an integrated security server and database integration features, and it can be connected to other RetrievalWare components, such as the Profiling Server, which filters incoming news or messages. The RetrivalWare Web Server indexes HTML tags as searchable fields, indexes hyptertext links in HTML documents without conversion and allows queries to be stored in HTML pages for repeated use.

In contrast with Verity and Fulcrum, Excalibur does not offer a runtime module for CD-ROM title distribution. Data on a CD-ROM may be indexed and searched by a version of RetrievalWare, but the retrieval engine must be run from an NT or Unix server.

There is a real-time newswire and message filter module from Excalibur, the RetrievalWare Profiling Server, which has been developed into a more complete "agent" architecture for at least one customer, the Global Change Assisted Search for Knowledge.

To see it in action, visit the Web site at:

ask.gcdis.usgcrp.gov:8080

EFS and EFS WebFile. EFS, Excalibur's document imaging system, is now beginning to incorporate the new RetrievalWare engine for document searching and indexing, providing the option of semantic tools as well as pattern matching for indexing and searching the OCR-generated files that make the text searchable in scanned page images.

A new Excalibur product, Excalibur's EFS WebFile, enables users with HTML browsers to access an EFS document imaging system, serving up document images across the Net. As with the already universal fax format, scanned document images present a straightforward way to capture, transmit and store text or compound document pages. Adding an associated text file and indexing it is perhaps less elegant and more data intensive than converting to a single searchable portable page representation, such as PDF, but, with tools such as EFS WebFile, document imaging may become a popular way to convert paper documents into a repository that is accessed over internal, or even public, webs.

Partners and customers

The full-text retrieval market is big enough that every vendor of repute has amassed a list that includes big-name customers. Excalibur is no exception. Among its customers are United Airlines, Ford, Hewlett-Packard, Lockheed, Nynex, the U.S. Federal Reserve Board, the U.S. Joint Chiefs of Staff and the Global Change Research Consortium.

Electronic publishers and information vendors include ADP Brokerage Information Services, SandPoint Company and Physicians Online.

The U.S. Navy keeps its archive for the Commander in Chief of the Atlantic Fleet in RetrievalWare, and United Airlines uses it in its technical information mangement system. SRA International is using RetrievalWare to develop vertical products for legal and media industries, including litigation support applications and World News Connection, a new online offering developed for the National Technical Information Service.

Distribution partners include IBM, EDS, DEC, HP, Sun Microsystems, Silicon Graphics and KPMG Peat Marwick. There are independent software vendors, integrators and VARs in over 50 countries reselling and integrating RetrievalWare and EFS systems.

Infonautics. Infonautics, in Wayne, PA, has pioneered in providing low-cost online research services to school-age children, with its Homework Helper service on Prodigy and Electric Library on the Web. With Electric Library, students search through one billion words from 200 different publishers: 150 full-text newspapers, almost 800 full-text magazines, two newswires, 25,000 images, and other reference materials. According to Josh Kopelman, executive VP and cofounder of Infonautics, the firm picked RetrievalWare for both performance and retrieval features. Online research services placed severe demands on the search engine: coping with hundreds of simultaneous users (40,000 Web-site visitors per day), hundreds of megabytes of new data streaming every couple of days, a very heterogeneous body of subject matter (from Shakespeare to the Bulletin of the Atomic Scientists) and users who are not experienced searchers, nor particularly good spellers. "We knew Boolean searching was out. We needed high performance in terms of speed, and we needed to price our service far under the competition, but the most important thing was customer satisfaction based on whether the search engine actually returns a ranked list of hits that corresponds to the user's needs," explained Kopelman. "When we made the selection of a retrieval engine in 1992, the semantic engine that is now part of RetrievalWare was significantly better than the competition in that regard."

The flexibility of RetrievalWare's architecture, and its APIs, helped Infonautics graft onto RetrievalWare its own "parts of speech" module, which removes further ambiguities.

Having put together a flexible and high-performance online publishing system for Homework Helper and Electric Library, Infonautics also resells Excalibur RetrievalWare as part of an OEM turnkey electronic publishing bundle to publishers. The package, called Electronic Printing Press, adds features such as data preparation, royalty management, credit-card processing, authentication and account management.

Infonautics, 900 W. Valley Rd., Suite 1000, Wayne, PA 19087-1830; phone (610) 293-6861; fax (610) 971-8859. Internet: www.elibrary.com

TASC. Intelligence agencies, as might be imagined, are among the pioneering consumers of text indexing and retrieval software, and among its biggest customers. The Analytic Sciences Corporation (TASC) has amassed what it believes to be the second-largest text database in the world (after Lexis/Nexis) for such a government application. As described at the last Excalibur annual Part-ner Conference, the TASC-developed system has two components, the first a profiling or filtering system, with thousands of users, English-only documents, 100 gigabytes of document text and a constant feed of small to medium-size documents. That's the little guy, and typical queries are small and simple, too.

The larger system, in terms of the text library's size, is a search system multiple terabytes (that's trillions of bytes) in size, consisting of multilingual documents, many of "suboptimal" data quality. It has only a few hundred users, but they construct large, complex queries, and every day the system receives 2–10 gigabytes of new information. Excalibur's RetrievalWare is used for text retrieval on both systems, with the Pattern server ideally suited for the multilingual nature of the text and low quality of some of the sources, and the Semantic server fulfilling the profiling requirements.

What to expect in the future

Version 5.2 of RetrievalWare is in beta release now, and Version 6.0 is planned for release this fall. We mentioned above the planned SGML and PDF support. Judy Feder, director of market development, and Doug Schulze, director of worldwide marketing, shared with us some of the other new features in these releases:

- The Windows and HTML clients will be completmented by set-up and administration tools that lesson the need to use the SDK or to set up HTML templates with macros, though all of the tools for customizing the user interface will still be provided.
- RetrievalWare will provide Kerberos authentication and security, controlling user access down to the document level. This will be useful to electronic publishers who wish to sell access to specific documents. There also will be utilities for auditing user activity.
- RetrievalWare will be able to serve as a front end to a relational database management system by passing an SQL statement to the RDBMS and passing the results back to the client. When this is complete, RetrievalWare, like Fulcrum, will be able to interact with structured databases without requiring database client software to be installed. In addition, RetrievalWare will be able to format and view relational database records with the RetrievalWare document parser. The RetrievalWare Web interface will be able to mix database and text search results in a single interface, and it will be able to store queries and query results in a structured database.
- RetrievalWare indexes will be updated in a manner closer to real time by periodically synchronizing the index with file-system directories (or with Lotus Notes databases) as documents are added, deleted or modified.
- For corporate users, a Lotus Notes indexing capability will be available; Notes documents retrieved with RetrievalWare will be read by Excalibur's Notes viewer.

Web update. The RetrievalWare Web product will feature a number of new enhancements. Among them will be:

- Querying by example (using document excerpts as queries).
- Recurrent searches (building successive queries based on the results of previous queries).
- Indexing and filtering of Internet Usenet newsgroup postings.
- A RetrievalWare spider (Web crawler) that will search out Web pages for profiling and indexing.

Multimedia retrieval. Beyond RetrievalWare text servers, adaptations of the pattern recognition technology developed by Excalibur and applied commercially for years to text, are being tuned, now, for searching multimedia content such as digital photos and digital video and voice, without human indexing. This is an exciting area of development that we expect to follow closely.

Conclusion

Excalibur's mission is to serve both corporations and commercial publishers by providing tools for managing collections of "unstructured" information, meaning documents rather than information stored in conventional databases. With its two prime technologies, semantic and pattern recognition, Excalibur does not stop at indexing and searching text in word processing files; it now extends into many potential publishing applications, both for inhouse repositories and online publications.

Excalibur will continue to offer and expand the EFS product line, which is aimed at those who receive, rather than originate, paper but who nonetheless want to create searchable digital archives instead of relying on cabinets for filing and on regular mail, fax and photocopying for distribution.

Excalibur is now moving beyond paper and text, extending the searchable universe to pictures, audio and movies. It plans to use pattern matching to provide positive identification in pictures, voice recordings and fingerprints, and to help users locate segments of digital video clips. To accomplish a mission this broad and to keep up with the times, Excalibur recently switched its marketing emphasis from direct sales to partners, VARs, OEMs and integrators. In addition, aided by the Conquest merger, it is making the transition to an up-to-date client-server architecture. If that technology pans out, as organizations begin adding more nontextual data to their repositories, Excalibur will

be in a unique position to offer a comprehensive set of indexing and retrieval tools.

In the text-retrieval arena, it remains to be seen whether combining the semantic network and pattern recognition approaches offers corporate users or publishers such additional accuracy or performance that RetrievalWare's unusual combination will flourish in the face of competitors that rely on more conventional retrieval strategies. Can a company that likes to find patterns in dirty data find happiness (expand to "pleasure," "joy," "profitable bottom line") with a company that specializes in searching for meaning? The answer is not in the dictionary.

Bernard Banet

Product Pricing and Platforms

RetrievalWare products

RetrievalWare runs on Unix (Sun OS and Solaris, IBM, AIX, HP-UX, SGI IRIX, DEC Alpha Digital Unix and Sequent DYNIX), and Windows NT servers with PC Unix and HTML clients. RetrievalWare can be purchased with the pattern technology alone or in combination with the semantic network servers.

Starter Kits (10 users, SDK product training, 90 days of hotline support)

RetrievalWare Pattern Server: $9,950

RetrievalWare Pattern and Semantic Server: $14,950

RetrievalWare Web Server (per server): $9,950

Options such as profiling, specialized language dictionaries and database gateways are priced separately.

EFS products

Excalibur EFS document imaging software runs on VMS and major Unix platforms, with PC and Mac clients. Pricing is per concurrent users (*e.g.*, $3,000 for 10 concurrent users).

EFS WebFile supports Web clients for an additional $5,000.

Excalibur Technologies

Corporate Ridge, Suite 1095

McLean, VA 22102

Phone (703) 790-2110, Fax (703) 790-2111

Web: www.excalib.com

There are four major business units: Commercial, Federal, Online, and OEM/Business Development. There is another U.S. office in Carlsbad, CA, and one in the UK in Windsor, Berkshire.

Copyright 1996 by Seybold Publications Inc

Intelligent Web Search Agents

4

By Csaba J. Egyhazy,[1] Thomas K. Plunkett Jr.,[2] and David M. Thompson[3]

Outline

1.0 Information Retrieval on the Web

1.1 Web Search Engines

1.2 Meta-Search Engines

2.0 Search Agents

3.0 Intelligent Web Search Agents

3.1 Ontology

3.2 Web Search Agent Ontology

4.0 An Intelligent Web Search Agent Prototype

4.1 Implementation Strategy

4.2 User Interface

4.3 Planning Level

4.4 Inferencing C-Language Integrated Production System Module

4.5 Search Engine and Web Interface Level

4.6 Feedback Loop Level

5.0 Conclusions

1.0. Information Retrieval on the Web

We identified four generations of Information Retrieval tools that assist people in searching the World Wide Web. The first generation of Information Retrieval tools were designed for use with bibliographic databases. They provided access to references to the end documents rather than to the documents themselves, and indexing and searching were thus applied to document surrogates, such as titles or abstracts. These tools require considerable human effort to collect, arrange, code, and annotate the various resources. A primary benefit of the first generation tools is providing users with easy browsing capabilities. The second generation of tools attempts to collect and index resources as an automated function. Automatic collection and indexing reduces the amount of human effort. The ability to search through massive amounts of information and locate the desired information for the user is the primary benefit of the second generation of tools. The third generation deals with World Wide Web search engines, such as Harvester and MetaCrawler. The fourth generation involves new ideas, such as search agent technology; currently being developed to search for information on the Web. In this article, we discuss search agents, and introduce the characteristics of our Intelligent Web Search Agent. We begin with Web search engines.

1.1. Web Search Engines

Web search engines have two components: collection and search. The collection part roams the Internet, primarily visiting web sites and ftp file servers. It brings back the resources (often an abstract instead of the entire resource), indexes the materials it brought back, and creates a database. The search component concerns the provision of information to the end user, and is an interface between the user and the indexed database of resources.

There are two schools of thought regarding whether to add user-controlled search options to a search service in an attempt to acquire more relevant documents. Many software designers of relevance-ranking systems suggest that searchers first allow the search algorithms to do their best without interference. They recommend throwing as many related terms at the search engine as possible to give it a chance at interpreting the query.

The strategy of throwing many related terms at the search engine may work well for some queries,

but not all. We have found that adding more terms to a query can skew the results such that the search engine software interprets an unintended concept as central to a user's interest. Furthermore, most modern search engines utilize a thesaurus of similar terms; therefore, throwing many related terms at the search engine may be an unnecessary effort by the human being. Later in this article, we introduce the idea of an autonomous software component that among other things can assist the user in selecting additional query terms.

Web search engines can be widely encompassing or narrowly specialized. Each of them has unique content, unique interface, a set of rules for searching, and different displays for search results. To perform an exhaustive search, users often utilize multiple resources, necessitating familiarity with the different interfaces and searching rules. Fortunately, there are tools that overcome the difficulties of having to learn multiple interfaces and searching rules. These tools are referred to as meta-search engines.

1.2. Meta-search Engines

Unlike the individual search engines, meta-search engines do not have their own databases. Nor do they collect web pages, accept Universal Resource Locator additions, nor classify or review web sites. Instead, they send queries simultaneously to multiple web search engines. Some meta-search engines, like SavvySearch, try to maximize the likelihood of finding good links while holding resource consumption to a minimum, by ranking the available search engines for how well they respond to the terms in the query and dispatching the query only to the top ranked search engines. Many meta-search engines integrate search results, eliminate duplications, and rank the results through their own criteria.

Meta-search engines are not designed for exhaustive searches. Most meta-search engines only make use of the top 10 to 100 hits from each of the search engines they contact. While this is sufficient for most searches, individual search engines must be consulted if a user must search all of the hits and can not reformulate the query to avoid a large number of hits.

We recommend the use of Meta-search engines when a user is looking for a particular resource or a specific answer to a question. For these purposes, the meta-search engine seems more likely to return the relevant resource. We recommend searching multiple individual search engines when a

user desires to see every resource that covers a particular topic. In order to answer the question of when to select between a Meta-search engine and an exhaustive search of individual search engines, we suggest the use of search agents.

2.0. Search Agents

An agent is a powerful and ubiquitous abstraction for performing advanced information retrieval on the web. By using search agents, we can hide the details of the complex technology underlying the Internet and the many resources the agent accesses. By making the technology transparent, we are more likely to succeed in our goals of focusing on the user's needs and improving the relevancy of the information being retrieved.

The pervasive interactive style for today's computers is direct manipulation: point at the icon, click on it, drag it, and drop it. Several studies have remarked upon the productivity and timesaving benefits of "point and click" interfaces for human users and the marketplace has certainly agreed. In a similar vein, who would want to spend days and weeks looking through hundreds of networks with millions of potentially useful items? Experts in artificial intelligence propose search techniques to resolve these problems. Intelligent background processes that can successfully clone their users' goals and carry them out should result in major savings of human effort and productivity. Indirectly managing agents could potentially result in greater productivity savings then personal computer users experienced when they switched from text commands to point-and-click graphical user interfaces.

Users delegate to the search agent the tasks of determining where to find the information and how to retrieve it. There are many different possible methods agents may use and many different resources they many contact in their search for an answer. There are a number of specialized search agents already performing on the web. BargainBot is an interactive search agent that simultaneously searches multiple bookstores for the details of particular books. Electronic commerce is considered by many to be the future of the Internet.[4] The presence of effective search agents to locate competing products and the lowest available price will be crucial to commerce over the web.[5]

Some agents can adapt to their environment. The environment in which an agent has to interact can be described in several different ways. It can be accessible vs. inaccessible; deterministic vs. non-deterministic; episodic vs. non-episodic; static vs. dynamic; and discrete vs. continuous.[6] The agents can learn from their experience, via machine learning, knowledge discovery, statistical techniques, and through communication with other agents and knowledge repositories. The Common Object Request Broker Architecture (CORBA) can assist agents in adapting to their environment by providing access to knowledge that is stored in ontology agents (defined in Section 3.1 Ontology) and through other services such as naming services, trader services, and broker services.

Other agents know how to recognize the user's underlying goals and intentions, and react to unexpected situations in a robust manner. In other words, intelligent agents are able to represent and reason about a number of things that are essential in determining if information is relevant to a user. The agent can reason about such topics as: beliefs about what the user wants; services available from other agents and ontologies; intentions about its own future plan to satisfy the users needs; perceptions; and desires about future states (i.e. goals).

We refer to software agents with the above features as Intelligent Web Search Agents.

3.0. Intelligent Web Search Agents

We define an Intelligent Web Search Agent as an autonomous, goal-directed process that is situated in, is aware of, and reacts to its World Wide Web environment. It uses standard languages and protocols to cooperate and collaborate with other agents (software or human) to accomplish its tasks. Intelligent Web Search Agents process and "understand" information, both on the level of individual documents or objects as well as collection-wide.

Although highly desirable, the design and implementation of intelligent agents for searching the Web is full of technical challenges. In designing these agents, we must touch upon a number of thorny Information Retrieval issues. Some of these issues are relevance feedback, interfaces and browsing, distributed Information Retrieval, multimedia retrieval, and routing and filtering. Fortunately, agent technologies and artificial intelligence techniques are potentially applicable to

many of these issues.[7] Intelligent Web Search Agents employ statistical approaches for deriving meta-data from information that are particularly interesting for analyzing text objects, such as n-grams and latent semantic indexing. N-grams involve fragmenting a word into a sequence of strings of n adjacent characters, and then estimating the similarity between a pair of words by the similarity between the corresponding sets of n-grams. Latent semantic indexing is a technique that uses the singular value decomposition of a parallel document collection to obtain term factor representations, which are comparable across all the languages of the collection.[8]

Let us consider the problem of efficiently extracting from the amazingly fast growing collection of documents available in the Hypertext Markup Language (HTML). HTML was created to display data for humans to read; it was never meant for data mining. The "knowledge" on a web page is in a human-readable language (usually English), laid out with tables and graphics and frames in ways that we as humans comprehend visually. Proponents of Extended Markup Language (XML) claim that web page authors will be able to annotate their web documents with machine-readable knowledge, so that Intelligent Web Search Agents can compile a knowledge base from web pages.

The central component of a knowledge-based agent is its knowledge base. A knowledge base is a set of representations of facts about the world. Our Intelligent Web Search Agent has a knowledge base, represented by facts and rules in the C-Language Integrated Production System inference engine. A knowledge-based agent has a learning capability if its knowledge base may be increased with new information it acquires as a result of its own actions.

Stuart Russell and Peter Norvig suggested that "an agent is anything that can be viewed as perceiving the environment through sensors and acting upon the environment through effectors."[9] A human agent has "eyes, ears, and other agents for sensors" and "hands, legs, mouth, and other body parts for effectors." Similarly, an Intelligent Web Search Agent may have web browsers, Java input screens, and interfaces to commercial search engines for sensors and includes inference engines, Java output screens, and web page parsers for effectors. The effectors for an Intelligent Web Search Agent are acting on the state space of the search engines and the outcome tables of the planning level.

A rational agent is "one that does the right thing." The measurement criteria of an Intelligent Web Search Agent may be difficult to quantify, given the size of the domain of the World Wide Web and the difficulties of natural language parsing and searching. Moreover, Computer Scientists have

argued over the meaning of relevance in information retrieval for over forty years without arriving at a conclusion. What is necessary then, is not to attempt to reach some imaginary nirvana called "Relevance." Rather, what is necessary, is to predefine some set procedures and standards, and then judge the agent by whether it adheres to those procedures and standards. In doing so, we recognize that these particular procedures may not obtain the most relevant documents for an individual user. However, by standardizing our approach, we attempt to provide consistent, and improving, results over the long run.

3.1 Ontology

At the core of our approach lies the concept of ontology. An ontology in the domain of artificial intelligence describes an explicit specification of some topic and a set of relationships among the terms in that domain. It is a formal, declarative representation that includes the vocabulary for referring to terms in the subject area and the logical statements that describe the terms.[10] When an agent requests additional information regarding a particular domain of knowledge, the agent requests this information from an ontology agent. If the active agent discovers new knowledge about its world, it may send this new knowledge to the ontology agent to add to the ontology.

3.2 Web Search Agent Ontology

For the purposes of knowledge sharing, we designed a hierarchical structure to simplify the ontological relationships within our chosen domain. The two most prominent parts of the hierarchy are the Web Page Ontology (see Table 3.1) and the Web Search Agent Ontology (see Table 3.2). The Web Search Agent Ontology inherits much of its content from the Web Page Ontology. Likewise, the Web Page Ontology inherits much of its content from the meta-classes above it, such as the Multi-Media document class and the Language Constructs class.

Web Page Ontology

Structure	Hypertext Markup Language
Structural Attributes	Meta, Link, Titles, Image Captions
Content	Alphanumeric data, organized in word form

Table 3.1

Our proposed ontology describes the knowledge domain for the Intelligent Web Search Agent. In particular, we focused on categories, which our web pages could fall into, and the relationships between those categories. We also focused on data, which could be used to specify the nature of the relationships. For instance, a document with meta-data is likely to be more relevant than a document that lacked meta-data (holding all other characteristics equal). Close proximity of related words could further increase the potential importance of the document.

Web Search Agent Ontology

Agent Goal	Return Multiple Web Pages in order of "Relevance"
Keywords	Words identified as likely to increase "Relevance" if found in web page
Keyword Search List	List of words likely to increase "Relevance" if found on the same web page
Special Relationships	Two or more Keywords located within a pre-defined distance of each other
Knowledge Base	Collection of statistics of knowledge items related to the subject matter
Web Page	Incorporates concepts found in the Web Page Ontology

Table 3.2

4.0. An Intelligent Web Search Agent Prototype

The goals of our Intelligent Web Search Agent are to produce a refined and distilled subject-matter search of the Web, given certain inputs and tolerance criteria prepared in advance of the search. It uses an objective approach to indicate a different presentation order of the various pages returned from a search engine; also, a reduced list of "relevant" Web pages on a topic is returned. The rule-based inference engine keeps track of the descriptive statistics for each page and may give contingency-based recommendations up the planning chain, depending on the nature of those statistics.

Stuart Russell and Peter Norvig suggest that an agent is a program working within a given architecture and that each agent type has within its framework, or make-up, percepts, actions, goals, and its environment.[11] The percepts of our Intelligent Web Search Agent are typed words. Its actions are to print suggestions and initiate search criteria on the Web. Its goals are to distill and aggregate given subject matter on the web. Its environment is the domain of web pages and related commercial search engines.

The design for our Intelligent Web Search Agent was inspired by Jörg Müller's robotic world. In his book, Design of Intelligent Agents: A Layered Approach, he describes robotic agents in an active-world loading-dock scenario that have to react in real time, using limited resources and an incomplete knowledge about the world. He presents the integration of agent interaction in planner-reactor architecture, using a control architecture that defines interactions among three layers: the Behavior-Based, the Local Planning, and the Cooperative Planning layers. Building on a heritage of Distributed Artificial Intelligence and the Knowledge Query and Manipulation Language, Müller deals with coordination and cooperation among distributed intelligent agents, where communication plays an important role in their interaction. He created a layered architecture with hybridization between a reactive system approach and a deliberative systems approach. He chose to avoid a pure reactive system approach because he did not want to limit the scope of goal-directed behavior. He declined a pure deliberative systems approach because of the danger of intractable general-purpose reasoning mechanisms. His Integration of Reactive Behavior and Rational Planning Model supports reactive, goal-directed, and interacting agents which present control layers and a knowledge base that supports different abstraction levels of knowledge, as well as a control structure among the layers. His Control Architecture uses as general design decisions the following: layered control, layered knowledge base, bottom-up activation, and top-down execution. The design of the knowledge base of his agent has three layers: the world

model, the mental model and the social model which reflect the informational state of the situations as well as the beliefs and the goals of the individual agent. The behavior of his agents result from the interplay among the individual control layers.[12]

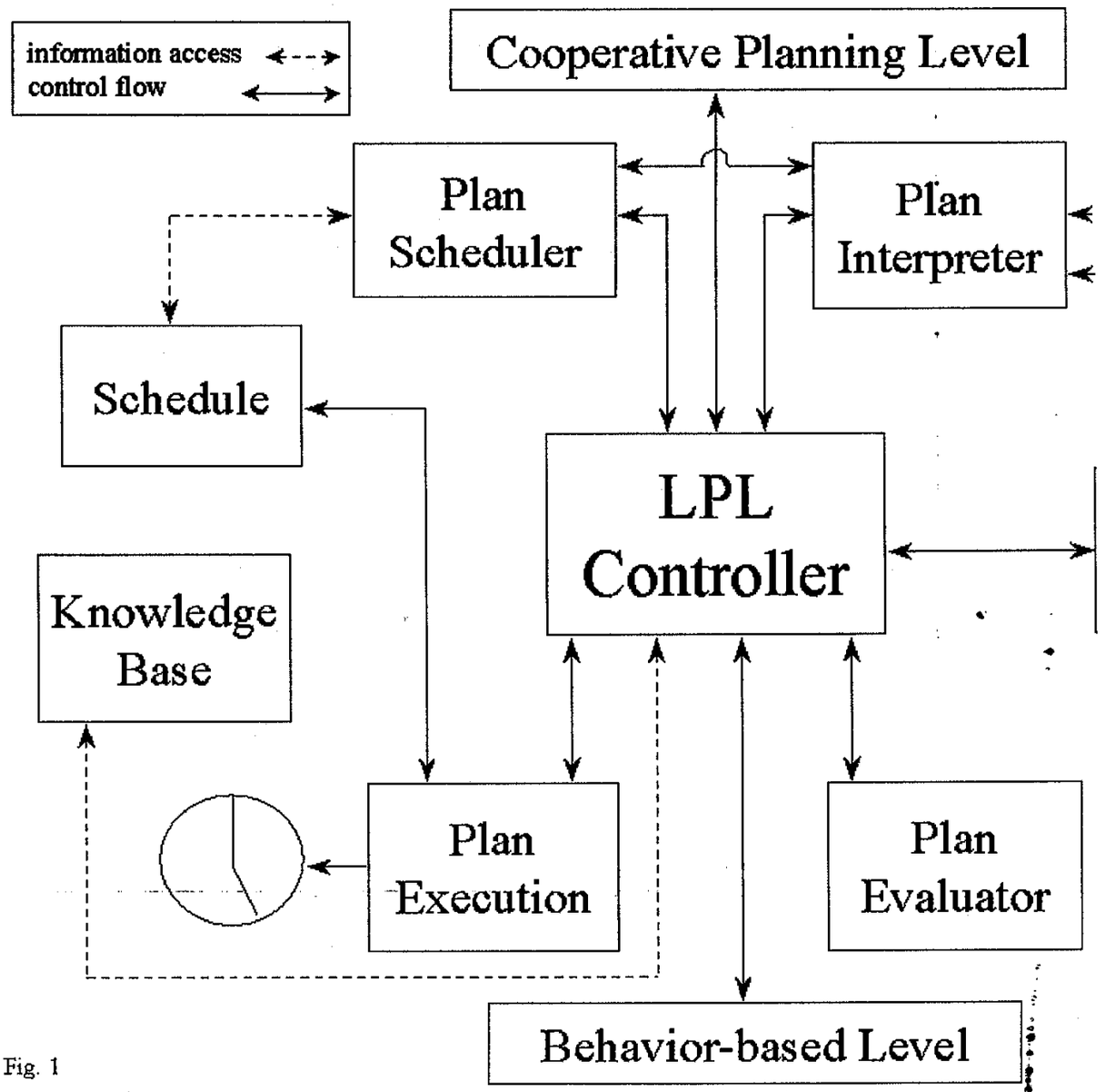

Fig. 1

FIGURE 1

Jörg Müller's Local Planning Layer Diagram

Müller designed his Local Planning Layer, as seen in Figure 1, to produce a sequence of actions to achieve a goal or task that has been presented to the agent. The planner, guided by domain knowledge, searches for a sequence of operator applications in a state space, and, given a problem description, attempts to return a plan. Plans are selected, interpreted, scheduled and executed in the control cycle of the local planning layer. In each control loop, one interpretation step is done for each plan stack: the agent determines what action to execute next. The planner commits to schedule the intention structure and the implementing actions of the agent. The local planning layer of his agent uses the agent's capabilities of planning to pursue its local goals. It can access the world model layer of the agent knowledge base to obtain information about the world. The local planning layer receives upward activation requests by the behavior-based layer, while commitments of execution of procedural patterns are posted down to the behavior-based layer.

4.1 Implementation Strategy

We designed the Intelligent Web Search Agent as a hierarchical structure to distill and aggregate information found on the World Wide Web. Our implementation strategy, as displayed in Figure 2, includes the following chain of events:

- Solicit a subject,
- Use search engines to acquire related Web pages,
- Parse Web pages to examine their structure,
- Prepare the parsed words for input-fact format,
- Derive ontological knowledge into a collection of rules,
- Run inference engine rules over the input-facts, and
- Produce recommendations based on the relevance rankings.

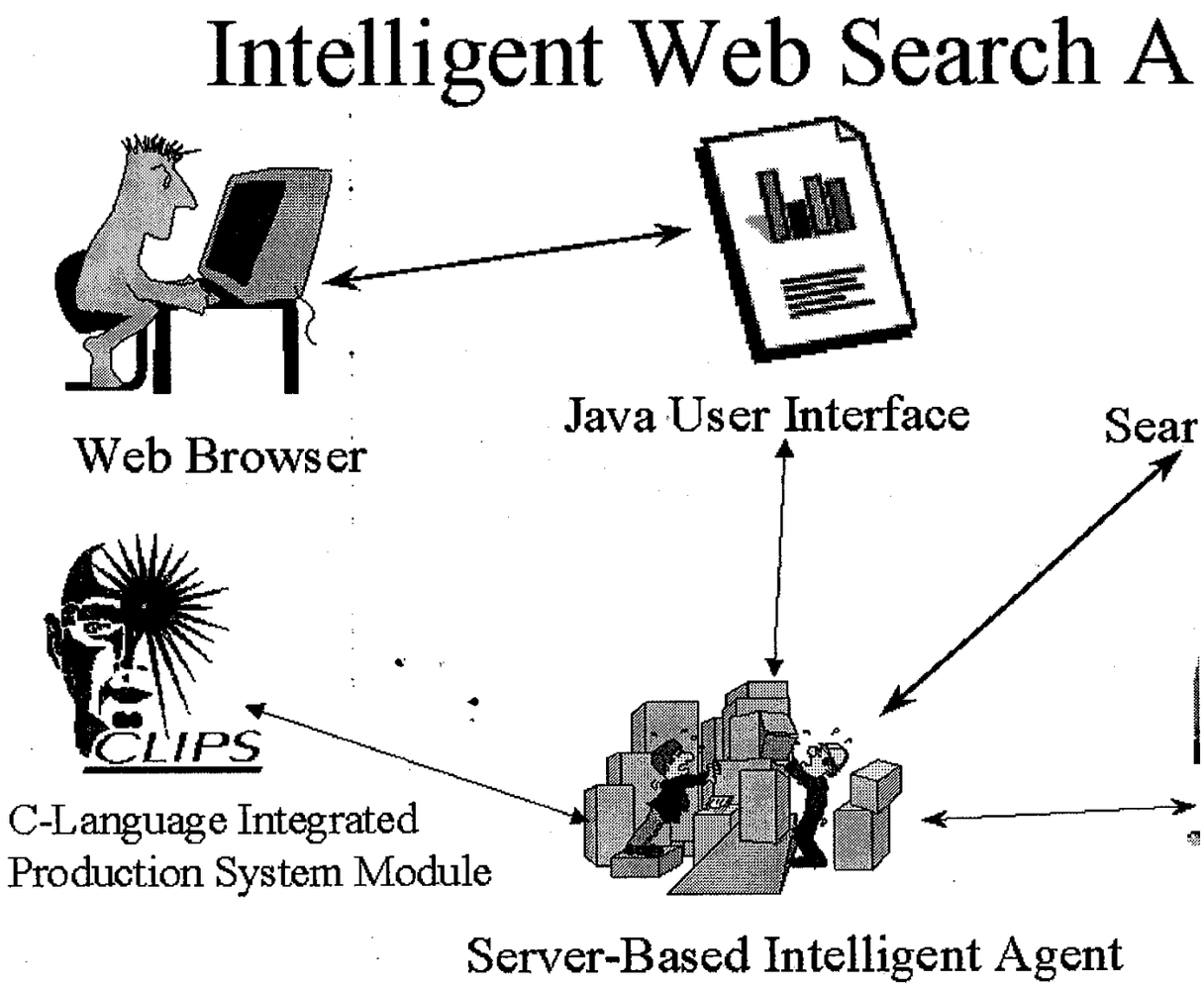

Figure 2

Intelligent Web Search Agent Layout Diagram

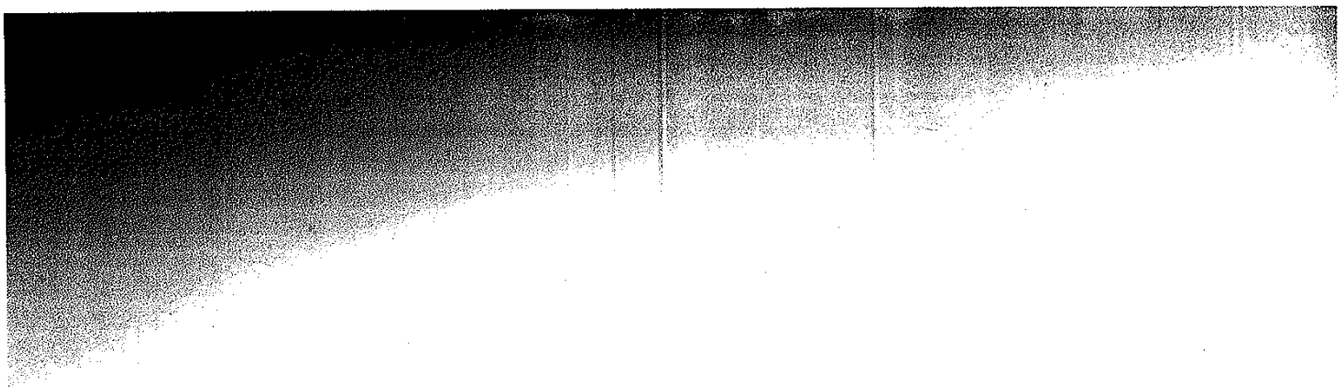

A demonstration of the proposed agent structure was limited to a select knowledge domain. The user entered into his browser the topic for which he sought information. The Java applet then formatted and uploaded the information to the Server-Based Intelligent Agent. The Agent contacted the Meta-Search Engine MetaCrawler. This, in turn, contacted at least ten other search engines. After receiving a list of possibly relevant sites, the Agent contacted the individual Web sites, downloading their respective contents. The Agent then used the Parser, the Thesaurus, and the Stemmer to reduce the number of terms. The Agent then attempted to match the terms with relevant keywords from the Knowledge Domain. After discovering keywords, the Agent determined whether those keywords had special significance within each document.

Each document had a corresponding truth table indicating the presence or absence of keywords and their possible special status, as determined by their ontology. We defined the "Relevance" of one document as being potentially greater if more significant elements were present in the document. The documents were then organized in order of potential relevance. They were displayed to the user, along with their individual truth tables.

4.2. User Interface

The user opens up his web browser and accesses our web page. The user attempts to retrieve information by entering a word phrase into the Java Applet Interface module through his browser. The Java User Interface then transmits his request to the Planning Level Controller of the Server-Based Intelligent Agent.

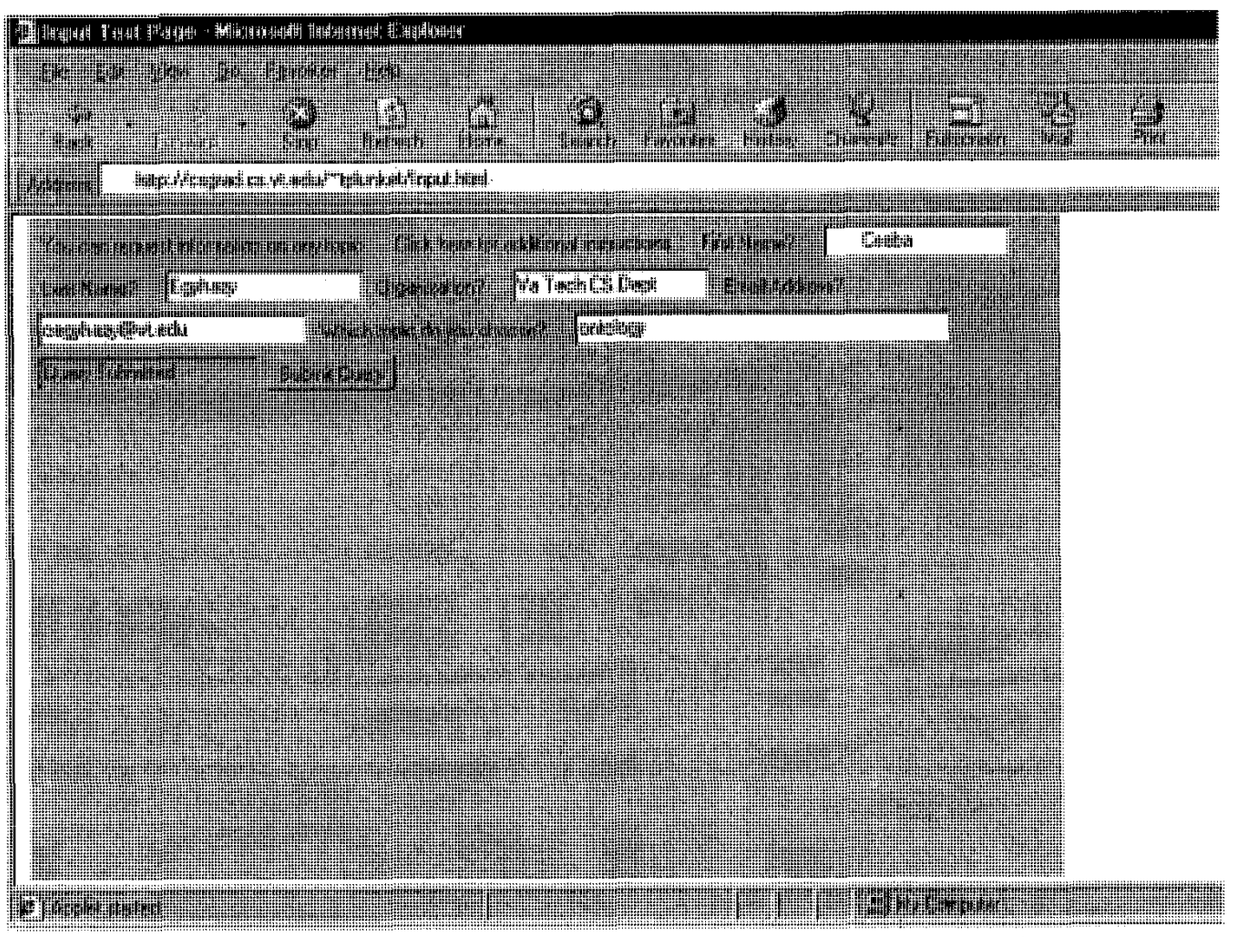

Figure 3

Input Test Page of Intelligent Web Search Agent

As seen in figure 3, the user submits a topic to the agent through his browser. In the particular case of figure 3, the user accesses Microsoft Internet Explorer, enters the universal resource locator for our web page, and chooses a topic. In this particular case, the user chose to retrieve information on the topic "Ontology." The Java Applet then transmitted the user's request to the Server-Based Intelligent Agent.

After the Server-Based Intelligent Agent finishes processing the user's request, the results are then handled by the Java Output Applet, as seen later in this paper in Figure 6.

4.3. Planning Level

We established modest goals for our Intelligent Web Search Agent. We wanted the Planning Level to be able to recognize prepared input words, which are the data on which the inference engine could be applied, prepare some truth tables that could be passed upward, and recommend updated search criteria on the given subject.

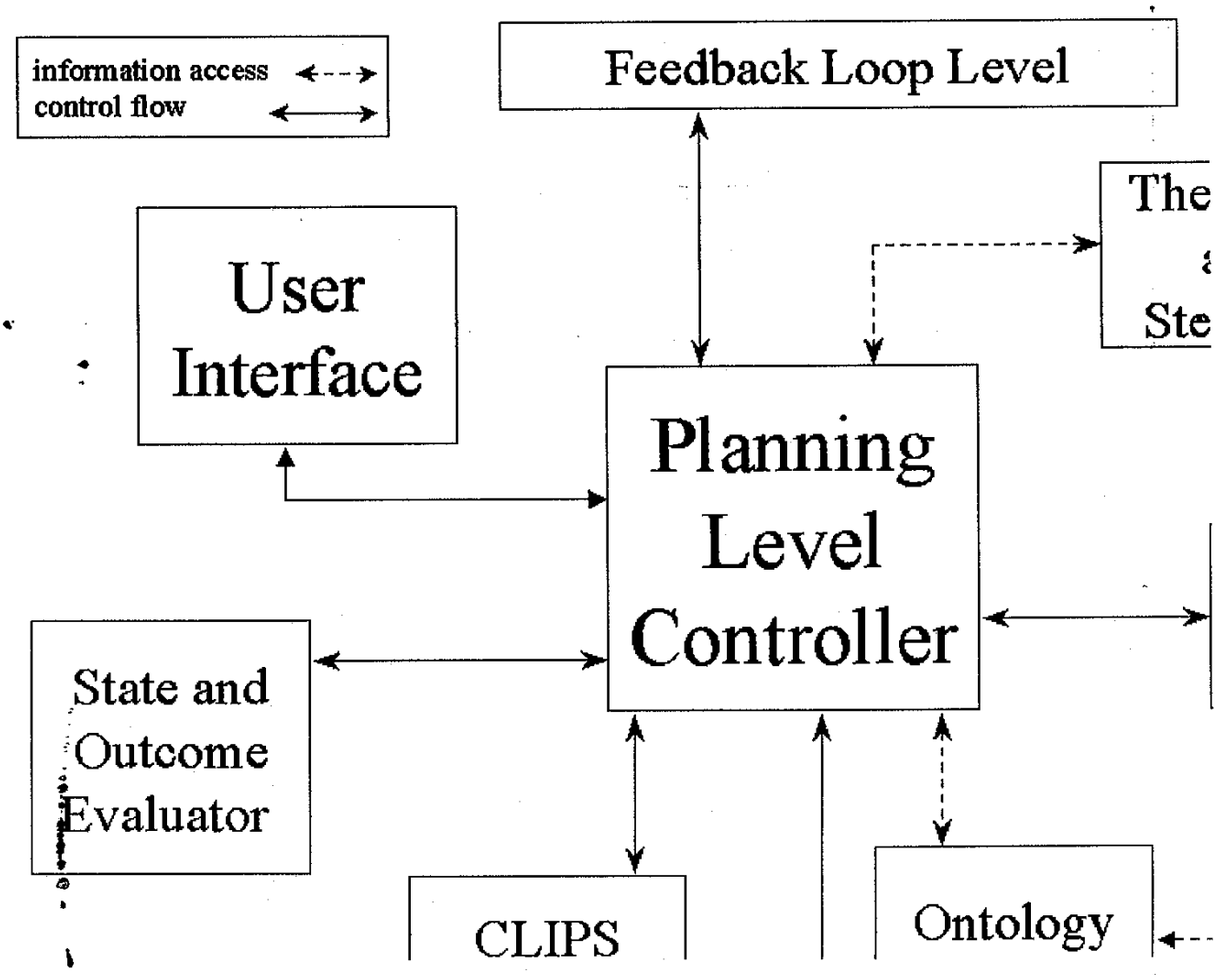

Figure 4

Diagram of Intelligent Web Search Agent Planning Level

Figure 4 focuses on the Planning Level to simplify the conceptual abstraction of our working model. The interaction characteristics could easily be extended upward to the Feedback Loop level and downward to the Search Engine Interface level.

The Planning Level Controller is central to the Planning Level of the architecture. Unlike Müller's architecture, our cycle of control is more state-related than temporal-related. After a condition, or series of conditions, is recognized in the pages that are examined, a recommendation can be passed up to the Feedback Loop Level. Access to the knowledge base is achieved through the defined rules in the inference engine and its interfaces to the other modules. We use the Thesaurus and Stemmer to expand the search capabilities to cover similar and related word phrases. In the Search Iteration Generator, we analyze word phrases and the context in which they appeared in the Search History. After further analysis utilizing the Thesaurus and Stemmer, we generate a search plan that may recommend additional search iterations.

The Ontology has collections of various statistics or item frequency triggers on several words or knowledge items that are related to the subject matter under consideration. It is also supplemented with a Thesaurus, which could broaden or refine the current search criteria. A recommendation may go up to the Feedback Loop Level to incorporate the broadened criteria in a separate or expanded search of the web. The derived relationships could then be incorporated into the knowledge base for future cycles of searches on the subject matter.

We have given value to word or subject matter frequency as reinforcing criteria to the search.

Furthermore, we have given additional value to whether:

- The keyword or subject matter phrase was incorporated into a meta-word field of the document;
- The keyword was incorporated into a Web link structure;
- The keyword was part of an image title, caption, or file name; and
- The keywords were in close proximity to additional keywords or subject matter.

When predefined goals are met in the analysis of the truth table, subsequent actions are triggered. The context and types of criteria related to the goal activation triggers influence plan selection. Related, but subtly differing plans could be activated, based on the context of the is-Meta, the is-Link, the is-Image, and the is-Proximate criteria associated with the prepared lists of words-as-facts.

The Outcome Evaluator module analyzes the results of the search and recommends whether to pursue an additional iteration of the search through the Feedback Loop Level. Alternatively, the agent may decide to present the search results to the user at this point. If so, the State Evaluator will transform the fact-relationships into truth-table format for display to the user as seen in Figure 5.

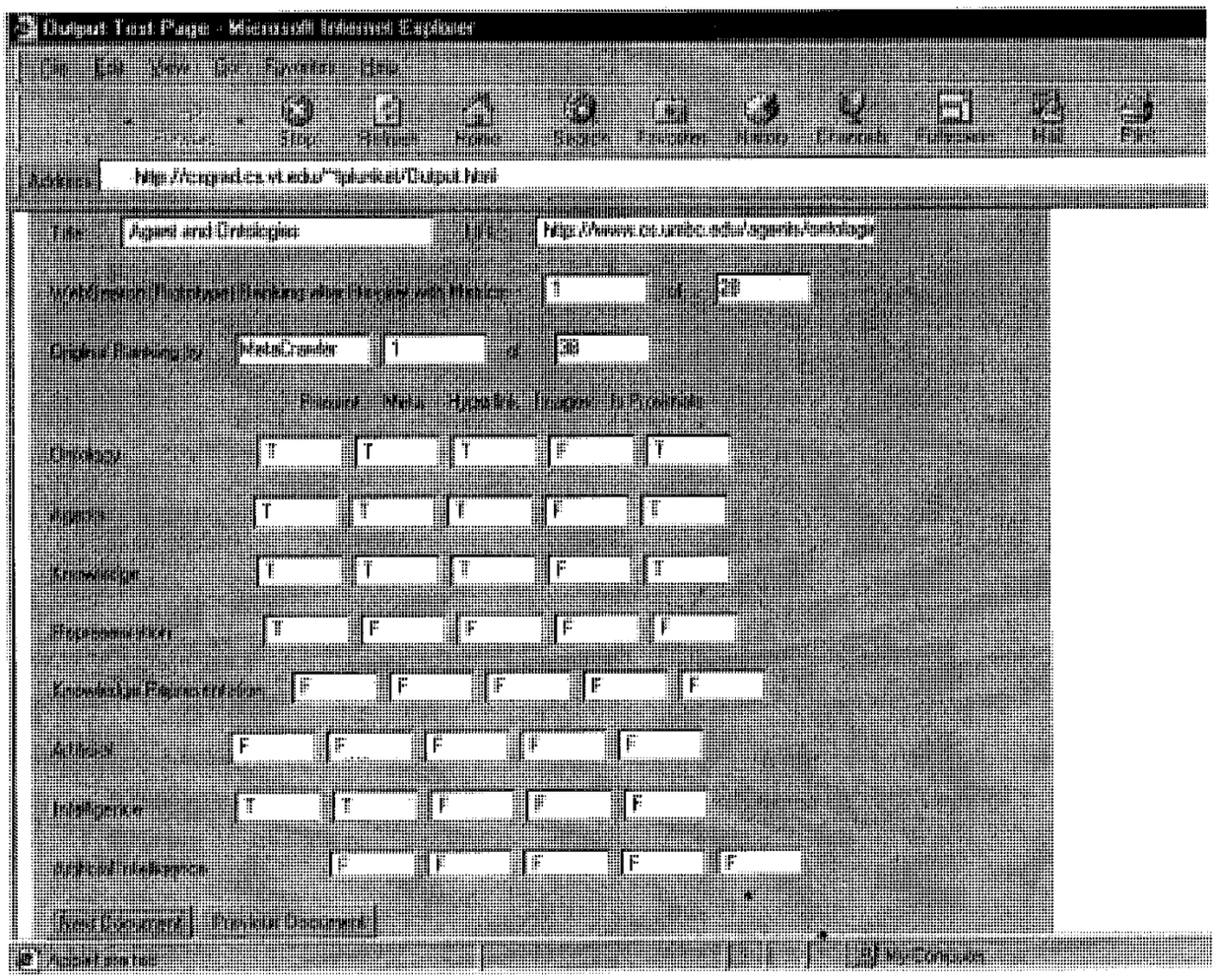

FIGURE 5

Output Test Page of Intelligent Web Search Agent

In Figure 5, the Output Test Page presents the title and universal resource locator of the retrieved page, the original ranking by the commercial meta-engine MetaCrawler, the post-process ranking, and the truth-table relationships. Navigation buttons allow the user to see the individual results for each web page that the Intelligent Web Search Agent was able to contact. In the particular case of this retrieval, both our Agent and MetaCrawler ranked the "Agent and Ontologies" web site at www.cs.umbc.edu as potentially most relevant. When navigating through the series of documents, individual web pages have different rankings between the two series. MetaCrawler had ranked

thirty-eight pages; our Intelligent Web Search Agent eliminated ten of those pages because the web sites were either duplicative or inaccessible.

4.4. Inferencing C-Language Integrated Production System Module

The C-Language Integrated Production System (CLIPS) module provides the inferencing capability for our knowledge base. This rules-based inference engine was a key component in our project. We created rule and fact-based inference code where the engine analyzed and matched the keywords and various aspects of the Web pages. The facts and rules that are inputs into the inference engine are represented on the Planning Level diagram by the knowledge base. The inference engine applies those rules to the input and sends the output to the Outcome Evaluator.

CLIPS is an expert system shell developed by NASA. CLIPS is broadly available[13] as freeware for educational purposes through the Client Server Systems Branch of the NASA/Johnson Space Center.[14]

The CLIPS structure is divided between the paradigms and the constructs. The CLIPS rules paradigm supports the expert system structure by implementing the rules in our ontology. The CLIPS pattern paradigm supports pattern recognition by identifying frequencies of particular words and relations in documents. The CLIPS procedural paradigm supports the logic within the Planning Level by implementing the interrelationships of the various modules. The object paradigm supports Object-Oriented Programming concepts of abstraction, encapsulation, inheritance, polymorphism and dynamic binding.[15]

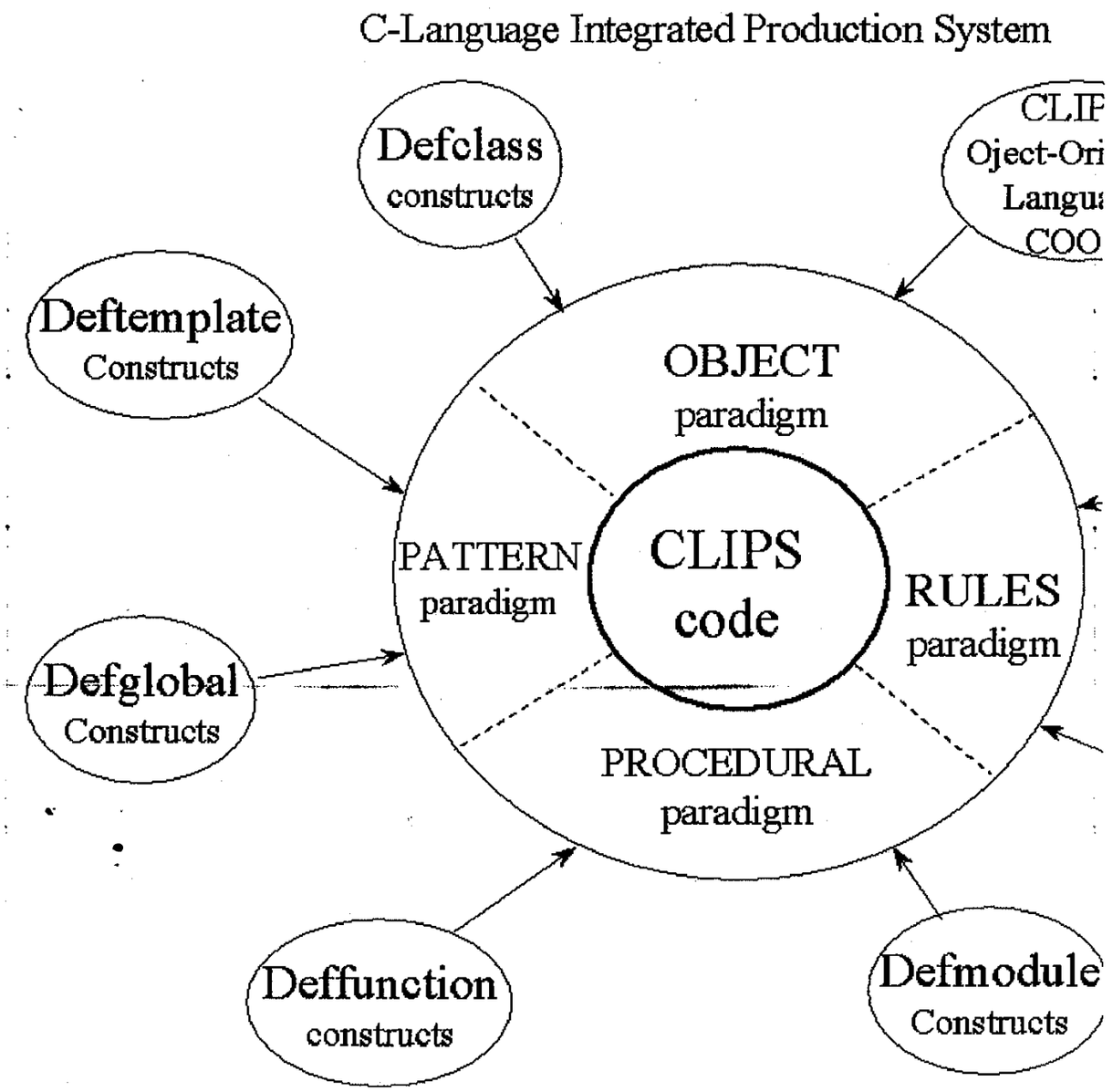

FIGURE 6

Diagram of C-Language Integrated Production System module

The CLIPS constructs are an essential part of the production system as seen from Figure 6. The Deffacts construct imports a list of facts into the system for processing. The ontology defines the

rules that describe how to solve the problem, and these rules are imported into the Planning Level by the Defrule construct. The rules execute or not based on the existence of facts or objects. The Defmodule constructs provide support for the modular development and execution of the knowledge base for the Planning Level Controller. The Deffunction constructs perform the distillation and aggregation actions in the module. The remaining constructs affect some of the interrelationships among the modules within the Planning Level.

4.5. Search Engine and Web Interface Level

Another vital component of the Intelligent Web Search Agent is the Search Engine and Web Interface Level. This level of the Intelligent Web Search Agent will contact MetaCrawler or other search engines to acquire a list of web sites. Subsequently, the Intelligent Web Search Agent will contact these web pages individually to parse text and other hypertext markup language constructs in preparation for input fact format.

4.6. Feedback Loop Level

The purpose of the Feedback Loop Level is to add intelligence to the Agent's behavior in its world. The Feedback Loop Level may receive a recommendation from the Planning Level Controller to obtain enhanced criteria for the Ontology, such as additional keywords or value-added criteria, which could either change the relative values of the individual Web pages or generate additional searches of the Web. The Feedback Loop Level can choose to accept or to ignore the recommendations of the Planning Level Controller. Furthermore, the Intelligent Web Search Agent may implement iterative searching based on expanded criteria in order to refine the subject matter under consideration.

5.0 Conclusions

We believe that many knowledge-acquisition tasks will be easier to perform when aided by Intelligent Web Search Agents. This belief is based on our experience in comparing the quality and

time-difference of the results of unassisted searches with agent-assisted searches.[16] Moreover, the agent paradigm should be easier to extend to new capabilities than previous information retrieval technologies because of its intrinsic object-oriented nature and the associated benefits of software reuse.

We feel that further research in the field of Intelligent Web Search Agents will achieve significant results in allowing users to more efficiently acquire the information they seek from the World Wide Web. Future work may include the extension of the Server-Based Intelligent Agent querying capabilities to include semi-autonomous multi-level subject-matter query capability and an augmented ability to distill and refine subject matter.

End Notes

1. Associate Professor, Department of Computer Science, Virginia Polytechnic Institute and State University. B.A. 1972, M.S. 1974, Ph.D., 1976, Case Western Reserve University, cegyhazy@vt.edu

2. Ph.D. Candidate, Department of Computer Science, Virginia Polytechnic Institute and State University. B.A. 1990, J.D. 1994 George Mason University; M.S. 1998 Virginia Polytechnic Institute and State University, tplunket@csgrad.cs.vt.edu. The opinion and assessments in this paper are solely those of the authors and do not reflect the views of Bell Atlantic Network Services, Inc.

3. M.S. Candidate, Department of Computer Science, Virginia Polytechnic Institute and State University. B.A. 1975, mathematics , University of Virginia, thompsondm@comm.osd.mil . The opinion and assessments in this paper are solely those of the authors and do not reflect the views of the US Air Force or the US Government.

4. Oren Etzioni and Mike Perkowitz, "Adaptive Web Sites: An AI Challenge," IJCAI '97, propose that web servers should analyze user request patterns and use this data to dynamically restructure their pages to fulfill user needs.

5. Some examples of commercially available desktop agent software include Web Ferret and Copernic

6. Russell, Stuart and Peter Norvig, Artificial Intelligence : A Modern Approach (Prentice Hall Series in Artificial Intelligence), 1995, p.46.

7. The Intelligent Software Agents group at Carnegie Mellon is developing WebMate, a personal Web agent integrating parallel search techniques, relevance feedback, similarity-fetching, and off-line browsing.

8. Landauer, T.K and Littman, M.L. "Fully Automatic Cross Language Document Retrieval Using Latent Semantic Indexing," Proceedings of the Sixth Conference of UW Center for the New OED and Text Research, pp.31-38.

9. Russell, Stuart and Peter Norvig, Artificial Intelligence : A Modern Approach (Prentice Hall Series in Artificial Intelligence, 1995, p.31ff.

10. T. R. Gruber. "A translation approach to portable ontologies.".Knowledge Acquisition, 5(2):199-220, 1993.

11. Russell, et al., ibid.

12. The Design of Intelligent Agents: A Layered Approach, by Jorg Muller

13. CLIPS, version 6.0, can be found at the Carnegie Mellon University Artificial Intelligence Repository at www.cs.cmu.edu/afs/cs/project/ai-repository/ai/areas/expert/systems/clips

14. Joseph C. Giarratano, CLIPS User's Guide, Version 6.05, 1997.

15. CLIPS Reference Manual, Volume 1: Basic Programming Guide, Version 6.05, 1997.

16. Future plans call for rigorously evaluating the statistics for this methodology.

#7/A M.E 3-18-00

OIPE
MAR 13 2000
PATENT & TRADEMARK OFFICE 2050

003359.P004 Patent

IN THE UNITED STATES PATENT AND TRADEMARK OFFICE

In re Application of:

Henry R. Williams, Jr.

Application No.: 09/034,773

Filed: March 2, 1998

For: Agent-Based On-Line Information Retrieval and Viewing System

Examiner: Mehmet Geckil

Art Unit: 2756

RECEIVED
MAR 17 2000
TC 2700 MAIL ROOM

Assistant Commissioner for Patents
Washington, D.C. 20231

AMENDMENT AND RESPONSE TO OFFICE ACTION

Sir:

In response to the Office Action mailed on December 28, 1999, Applicant respectfully requests that the following amendments be entered and the remarks that follow be considered.

IN THE CLAIMS:

Please add the following new claims:

32. (New) A processing system for providing a plurality of local users with records stored remotely, the processing system comprising:

a first user interface to enable each of a plurality of local users to define a different corresponding set of search rules applicable to a predefined subject;

a remote database having a plurality of records with a structure;

03/14/2000 CVORACHA 00000013 09034773

01 FC:103 36.00 OP
02 FC:102 156.00 OP

a search agent to receive each set of search rules and to automatically retrieve records on only the predefined subject from the remote database based on each set of search rules and to store the retrieved records in a local database with the same structure as the remote database; and

a second user interface to enable each of the plurality of local users to access from the local database a portion of the records on the predefined subject associated with the corresponding set of search rules.

33. (New) A method of providing a plurality of local users with information stored remotely on a network, the method comprising:

receiving from a plurality of user interface units a corresponding set of search criteria;

generating unique sets of search criteria relating to predefined subjects;

retrieving from a remote structured database on the network only those records relating to the predefined subjects based on the unique sets of search criteria;

storing on a local computer system the retrieved records in the same structure as the remote structured database; and

presenting to the plurality of user interface units records retrieved from the local computer system corresponding to the set of search criteria.

REMARKS

Reconsideration of the present application is respectfully requested.

All claims (1-31) stand rejected under 35 U.S.C. § 103(a) as being unpatentable over Syeda-Mahmood (U.S. Patent No. 5,920,856). No claims have been amended. Claims 32 and 33 have been added. No new matter has been added.

Applicant respectfully traverses each of the Office Action rejections for the reasons set forth below.

Claim 1 Rejection under 35 U.S.C. § 103(a)

The Examiner has mischaracterized Syeda-Mahmood in attempting to read it on Applicant's invention. Examiner's statement (Office Action, page 4, paragraph 5), "It appears that the applicant invention is directed [to] saving the queries submitted to remote databases for reuse but Syeda-Mahmood was exactly directed to the same goal.", ignores two elements of Applicant's claim. First, Applicant's claim recites a local database to store the retrieved information (more fully discussed below). Syeda-Mahmood is concerned with indexing and retrieving (primarily multi-media) files, while Applicant's invention is concerned with speed of accessing information. While these goals are not incompatible, neither are they the same. Second, Applicant's claim recites a set of search rules for each user. The cited art uses a common database for all users. The Examiner has inferred into Syeda-Mahmood elements that are not disclosed or suggested, and in doing so has incorrectly stated that Syeda-Mahmood "taught the invention substantially as claimed." (Office Action, page 2, paragraph 4.) For at least this reason, Applicant's claim 1 and claims dependent on it are allowable over the cited art.

Applicant's claim 1 recites, among other things, "a search agent configured to retrieve information ... and to store the retrieved information in a local database." (Emphasis added.) Syeda-Mahmood fails to disclose, suggest, or teach a local database storage of the retrieved information. Syeda-Mahmood only discloses a "meta-database." The Examiner maintains that "Syeda-Mahmood did not label the meta-database as local database or the clients as local clients but this is a system dependence difference." (Office Action, page 3, paragraph 5.) Applicant disagrees. The Examiner has not only misunderstood Applicant's claim, the Examiner has also improperly merged spatial and functional characteristics.

With respect to the spatial difference, the Examiner is maintaining from personal knowledge, "... examiner runs a web site...", that, "in the Internet paradigm the local and the remote is no more than semantics". (Office Action, page 3, paragraph 5.) Applicant disagrees. Applicant's Figure 1, while illustrating Applicant's disclosure with an Internet backbone, is in no way limited to this application. In fact, Applicant's claim 1, nowhere mentions the Internet. Aside from this, the Examiner's assertion of "semantics" contrasts with general knowledge within the industry, wherein local and remote are understood to have very different meanings and implications. Within the Internet context specifically, remote is understood to necessitate the need to get onto the Internet to retrieve information. Local, in contrast, does not imply the need to get onto the Internet to retrieve information. The implication of local versus remote databases is also well understood in the industry and goes to an important aspect of the Applicant's invention: speed of access to information. While the Examiner asserts that local versus remote is "semantics," it is often the relative speed of access between databases that

defines a local database versus a remote database. This difference in speed often also translates into a spatial relationship, which because of the finite speed of communication links, often results in a local database being physically closer to a user than a remote database, hence the colloquial use of the words local and remote rather than perhaps the more accurate description of faster and slower. Syeda-Mahmood discloses nothing to improve the speed of access to a remote database's information once the information has been located. The client in the cited art is still required to retrieve the information from the remote database. In contrast, the Applicant's claim 1, speeds access to the information for a client by storing retrieved information in a local database.

Finally, the functionality of the meta-database in Syeda-Mahmood and the local database in Applicant's claim are functionally, significantly different. Applicant's claim 1, recites retrieving information and storing "the retrieved information in a local database." (Emphasis added.) Syeda-Mahmood's meta-database does not store the retrieved information in the meta-database. A careful reading of Syeda-Mahmood discloses that the meta-database contains "query" and "scope of relevancy" information, not the retrieved information. These are very different. The meta-database in Syeda-Mahmood is not retrieving and storing the information requested, but instead storing the results of a refining module and indexes. (Syeda-Mahmood, Abstract; column 4, lines 20-25; column 5, lines 39-43; column 5, lines 66-67 to column 6, lines 1-2.). Storing retrieved information in a local database is sufficiently different from processing search inquiries and results and then generating "query" and "scope of relevancy" indexes that the former is not obvious in view of the latter. For at least the reasons above, Applicant's claim

1 and claims dependent on it are not obvious in view of the cited art, and are thus allowable over the cited art.

Claims 5 and 13 Rejection under 35 U.S.C. § 103(a)

Applicant's claims 5 and 13 recite, among other things a, "search agent configured to ... retrieve information ... and to store the retrieved information in a local database." (Emphasis added.) The lack of a local database in the cited art is discussed above in claim 1. For at least this reason, Applicant's claim 5 and 13, and claims dependent on these are not obvious in view of the cited art, and are thus allowable over the cited art.

Applicant's claim 5 recites, among other things, "enabling each of the plurality of local users to access from the local database ... the information...". Applicant's claim 13 recites, among other things, "viewing units ... configured to retrieve information from the local database...". Syeda-Mahmood does not show, suggest, or disclose access to a local database containing information that was previously retrieved. As discussed above, Syeda-Mahmood's meta-database contains "query" and "scope of relevancy" information, not the retrieved information. Thus, Syeda-Mahmood is incapable of performing this element of Applicant's claim 5 or 13. For this additional reason, Applicant's claims 5 and 13, and those claims dependent on these, are not obvious in view of the cited art, and thus, are allowable over the cited art.

Claim 20 Rejection under 35 U.S.C. § 103(a)

Applicant's claim 20 recites, among other things, "storing the retrieved information in a local database accessible to the plurality of local users." (Emphasis added.) The discussion on the cited art's lack of a local database, discussed above in claim 1, is applicable here. Further, Syeda-Mahmood does not teach or suggest a local database accessible to local users. Syeda-Mahmood discloses remote web site databases and information from these remote web site databases being relayed to the users. (Syeda-Mahmood, Figure 1 and column 7, lines 17-18.) Relaying information from remote web site databases to users is different than a local database accessible to local users. For this additional reason, Applicant's claim 20, and claims dependent on it are not obvious in view of the cited art, and are thus allowable over the cited art.

Claim 29 Rejection under 35 U.S.C. § 103(a)

Applicant's claim 29 recites, among other things, "storing the retrieved information on the predefined subject in a local database." The discussion on the cited art's lack of a local database, has been discussed above in claim 1. For at least this reason, Applicant's claim 29 and claims dependent on it are allowable over the cited art.

Applicant's claim 29 also recites, among other things, "responding to ...user inputs by retrieving from the local database a portion of the information on the predefined subject ... and by outputting the information to said one of the local users." As discussed above in claim 20, Syeda-Mahmood discloses only remote web databases which is different from local databases. For this additional reason, Applicant's claim 29 and claims dependent on it are allowable over the cited art.

Finally, Applicant's claim 29 also recites, among other things, receiving "a set of user inputs from each ... user, each set of user inputs for creating a set of search rules for the corresponding local user ....". (Emphasis added.) Syeda-Mahmood does not show or suggest a set of search rules for a corresponding local user. Syeda-Mahmood only discloses a meta-database that is common to all users. Rules common to all users is different from rules for each user. For this additional reason, Applicant's claim 29 and claims dependent on it are not obvious in view of the cited art, and are thus allowable over the cited art.

Claims 4, 6, 16, 25, 31, 32, and 33

Applicant's claims 4, 6, 16, 25, 31, and new claims 32 and 33, all recite, among other things, that the same database structure of the remote information is used in the local database. Syeda-Mahmood does not disclose or suggest this feature. Syeda-Mahmood is similar to conventional technologies, such as web browsers, with respect to the retrieval of information, because it is oriented to information presentation, rather than information organization. As explained in Applicant's Specification (page 2 lines 5-22, page 7 lines 5-16, and page 13 lines 17-21), Applicant's invention addresses the problem of more effectively allowing a user to assimilate large volumes of information. Because conventional presentation technologies, such as web browsers and Syeda-Mahmood are focused on presentation of information rather than information organization, they do not provide large volumes of information to a user in a manner that can be easily assimilated. In the present invention, by using in the local database the same organizational structure as the remote database, large volumes of information on a predefined subject can be more effectively conveyed. Syeda-Mahmood does not attempt to solve this

problem and therefore does not teach, disclose, or even suggest using the same database structure in the local database as in the remote database. For at least this reason, Applicant's claims 4, 6, 16, 25, 31, 32, and 33 are allowable over the cited art.

Finally, even assuming *arguendo*, that Syeda-Mahmood has a local database, Syeda-Mahmood's meta-database and Applicant's local database perform different functions. Applicant's local database stores retrieved information from the remote database. Syeda-Mahmood's meta-database does not store the retrieved information in the meta-database. Syeda-Mahmood's meta-database contains "query" and "scope of relevancy" information derived from a refining module, not the retrieved information, and certainly not the retrieved information in the same structure as the remote database. These are very different. Storing retrieved information in a local database is sufficiently different from processing search inquiries and results and then generating "query" and "scope of relevancy" indexes that Applicant's claimed element is not obvious in view of the cited art. For this additional reason, Applicant's claims 4, 6, 16, 25, 31, 32, and 33 are non-obvious in view of the cited art, and are thus allowable over the cited art.

CONCLUSION

For the foregoing reasons, Applicant respectfully submits that all claims are in condition for allowance. Allowance of all claims is respectfully requested.

If there are any additional charges, please charge our deposit account no. 02-2666.

Respectfully submitted,

BLAKELY, SOKOLOFF, TAYLOR & ZAFMAN LLP

Date: 3/7/00

Jordan M. Becker
Reg. No. 39,602

12400 Wilshire Blvd.
Seventh Floor
Los Angeles, CA 90025
(408) 720-8300

I hereby certify that this correspondence is being deposited with the United States Postal Service as first class mail with sufficient postage in an envelope addressed to the Assistant Commissioner for Patents, Washington, D.C. 20231

on March 7, 2000
Date of Deposit

Mary E. Buggie
Name of Person Mailing Correspondence

Mary E Buggie
Signature

3/7/2000
Date

OIPE
MAR 13 2000
PATENT & TRADEMARK OFFICE 3050

~~2756~~ 2757

#7

Attorney's Docket No.: 003359.P004 Patent

In re the Application of: Henry R. Williams, Jr.
(inventor(s))

Application No.: 09/034,773

Filed: March 2, 1998

For: Agent-Based On-Line Information Retrieval and Viewing System
(title)

RECEIVED
MAR 17 2000
TC 2700 MAIL ROOM

ASSISTANT COMMISSIONER FOR PATENTS
Washington, D.C. 20231

SIR: Transmitted herewith is an Amendment for the above application.

_____ Small entity status of this application under 37 C.F.R. §§ 1.9 and 1.27 has been established by a verified statement previously submitted.
_____ A verified statement to establish small entity status under 37 C.F.R. §§ 1.9 and 1.27 is enclosed.
_____ No additional fee is required.

The fee has been calculated as shown below:

	(Col. 1) Claims Remaining After Amd.		(Col. 2) Highest No. Previously Paid For	(Col. 3) Present Extra	SMALL ENTITY Rate	SMALL ENTITY Additional Fee	OTHER THAN A SMALL ENTITY Rate	OTHER THAN A SMALL ENTITY Additional Fee
Total Claims	* 33	Minus	** 31	2	X9	$	X18	$ 36.00
Indep. Claims	* 7	Minus	*** 5	2	X39	$	X78	$ 156.00
_____	**First Presentation of Multiple Dependent Claim(s)**				**+130**	**$**	**+260**	**$**
					Total Add. Fee	$	Total Add. Fee	$ 192.00

* If the entry in Col. 1 is less than the entry in Col. 2, write "0" in Col. 3.

** If the "Highest No. Previously Paid For" IN THIS SPACE is less than 20, write "20" in this space.

*** If the "Highest No. Previously Paid For" IN THIS SPACE is less than 3, write "3" in this space. The "Highest No. Previously Paid For" (Total or Independent) is the highest number found from the equivalent box in Col. 1 of a prior amendment or the number of claims *originally filed.*

I hereby certify that this correspondence is being deposited with the United States Postal Service as first class mail with sufficient postage in an envelope addressed to the Assistant Commissioner for Patents, Washington, D.C. 20231

on March 7, 2000.
Date of Deposit

Mary E. Buggie
Name of Person Mailing Correspondence

Mary E. Buggie 3/7/00
Signature Date

(LJV/cak 11/30/98)

__X__ A check in the amount of $ 192.00 is attached for presentation of additional claim(s).
_____ Applicant(s) hereby Petition(s) for an Extension of Time of _____ month(s) pursuant to 37 C.F.R. § 1.136(a).
_____ A check for $_____ is attached for processing fees under 37 C.F.R. § 1.17.
_____ Please charge my Deposit Account No. 02-2666 the amount of $_____.
A duplicate copy of this sheet is enclosed.
__X__ The Commissioner of Patents and Trademarks is hereby authorized to charge payment of the following fees associated with this communication or credit any overpayment to Deposit Account No. 02-2666 **(a duplicate copy of this sheet is enclosed)**:
- __X__ Any additional filing fees required under 37 C.F.R. § 1.16 for presentation of extra claims.
- __X__ Any extension or petition fees under 37 C.F.R. § 1.17.

BLAKELY SOKOLOFF TAYLOR & ZAFMAN LLP

Date: 3/7/00

Jordan M. Becker

Reg. No. 39,602

12400 Wilshire Boulevard
Seventh Floor
Los Angeles, California 90025
(408) 720-8300

Attorney's Docket No.: 003359.P004 Patent

In re the Application of: Henry R. Williams, Jr.
(inventor(s))

Application No.: 09/034,773

Filed: March 2, 1998

For: Agent-Based On-Line Information Retrieval and Viewing System
(title)

RECEIVED
MAR 17 2000
TC 2700 MAIL ROOM

ASSISTANT COMMISSIONER FOR PATENTS
Washington, D.C. 20231

SIR: Transmitted herewith is an Amendment for the above application.

_____ Small entity status of this application under 37 C.F.R. §§ 1.9 and 1.27 has been established by a verified statement previously submitted.
_____ A verified statement to establish small entity status under 37 C.F.R. §§ 1.9 and 1.27 is enclosed.
_____ No additional fee is required.

The fee has been calculated as shown below:

	(Col. 1) Claims Remaining After Amd.		(Col. 2) Highest No. Previously Paid For	(Col. 3) Present Extra	SMALL ENTITY Rate	SMALL ENTITY Additional Fee	OTHER THAN A SMALL ENTITY Rate	OTHER THAN A SMALL ENTITY Additional Fee
Total Claims	* 33	Minus	** 31	2	X9	$	X18	$ 36.00
Indep. Claims	* 7	Minus	*** 5	2	X39	$	X78	$ 156.00
☐ First Presentation of Multiple Dependent Claim(s)					+130	$	+260	$
					Total Add. Fee	$	Total Add. Fee	$ 192.00

* If the entry in Col. 1 is less than the entry in Col. 2, write "0" in Col. 3.

** If the "Highest No. Previously Paid For" IN THIS SPACE is less than 20, write "20" in this space.

*** If the "Highest No. Previously Paid For" IN THIS SPACE is less than 3, write "3" in this space. The "Highest No. Previously Paid For" (Total or Independent) is the highest number found from the equivalent box in Col. 1 of a prior amendment or the number of claims originally filed.

I hereby certify that this correspondence is being deposited with the United States Postal Service as first class mail with sufficient postage in an envelope addressed to the Assistant Commissioner for Patents, Washington, D.C. 20231

on March 7, 2000.
Date of Deposit

Mary E. Buggie
Name of Person Mailing Correspondence

Mary E. Buggie 3/7/00
Signature Date

(LJV/cak 11/30/98)

__X__ A check *in the amount of* $ 192.00 *is attached for presentation of additional claim(s).*

_____ Applicant(s) hereby Petition(s) for an Extension of Time of _____ month(s) pursuant to 37 C.F.R. § 1.136(a).

_____ A check for $_____ is attached for processing fees under 37 C.F.R. § 1.17.

_____ Please charge my Deposit Account No. 02-2666 the amount of $_____.

A duplicate copy of this sheet is enclosed.

__X__ The Commissioner of Patents and Trademarks is hereby authorized to charge payment of the following fees associated with this communication or credit any overpayment to Deposit Account No. 02-2666 **(a duplicate copy of this sheet is enclosed)**:

__X__ Any additional filing fees required under 37 C.F.R. § 1.16 for presentation of extra claims.

__X__ Any extension or petition fees under 37 C.F.R. § 1.17.

BLAKELY SOKOLOFF TAYLOR & ZAFMAN LLP

Date: 3/7/00

Jordan M. Becker

Reg. No. 39,602

12400 Wilshire Boulevard
Seventh Floor
Los Angeles, California 90025
(408) 720-8300

09/034,773

UNITED STATES DEPARTMENT OF COMMERCE
Patent and Trademark Office
Address: COMMISSIONER OF PATENTS AND TRADEMARKS
Washington, D.C. 20231

APPLICATION NUMBER	FILING DATE	FIRST NAMED APPLICANT	ATTORNEY DOCKET NO.
09/034,773	03/02/98	WILLIAMS H	03359.P004

EXAMINER	
GECKIL, M	
ART UNIT	**PAPER NUMBER**
2756	8

LM12/0424
BLAKELY SOKOLOFF TAYLOR & ZAFMAN
SEVENTH FLOOR
12400 WILSHIRE BOULEVARD
LOS ANGELES CA 90025

DATE MAILED: 04/24/00

This is a communication from the examiner in charge of your application.
COMMISSIONER OF PATENTS AND TRADEMARKS

NOTICE OF ALLOWABILITY

All claims being allowable, PROSECUTION ON THE MERITS IS (OR REMAINS) CLOSED in this application. If not included herewith (or previously mailed), a Notice of Allowance and Issue Fee Due or other appropriate communication will be mailed in due course.

☒ This communication is responsive to 7/13/00.

☒ The allowed claim(s) is/are 1-33.

☐ The drawings filed on _____ are acceptable.

☐ Acknowledgement is made of a claim for foreign priority under 35 U.S.C. § 119(a)-(d).

☐ All ☐ Some* ☐ None of the CERTIFIED copies of the priority documents have been

☐ received.

☐ received in Application No. (Series Code/Serial Number) _____.

☐ received in this national stage application from the International Bureau (PCT Rule 17.2(a)).

*Certified copies not received: _____.

☐ Acknowledgement is made of a claim for domestic priority under 35 U.S.C. § 119(e).

A SHORTENED STATUTORY PERIOD FOR RESPONSE to comply with the requirements noted below is set to EXPIRE **THREE MONTHS** FROM THE "DATE MAILED" of this Office action. Failure to timely comply will result in ABANDONMENT of this application. Extensions of time may be obtained under the provisions of 37 CFR 1.136(a).

☐ Note the attached EXAMINER'S AMENDMENT or NOTICE OF INFORMAL APPLICATION, PTO-152, which discloses that the oath or declaration is deficient. A SUBSTITUTE OATH OR DECLARATION IS REQUIRED.

☒ Applicant MUST submit NEW FORMAL DRAWINGS

☐ because the originally filed drawings were declared by applicant to be informal.

☒ including changes required by the Notice of Draftperson's Patent Drawing Review, PTO-948, attached hereto or to Paper No. 6.

☐ including changes required by the proposed drawing correction filed on _____, which has been approved by the examiner.

☐ including changes required by the attached Examiner's Amendment/Comment.

Identifying indicia such as the application number (see 37 CFR 1.84(c)) should be written on the reverse side of the drawings. The drawings should be filed as a separate paper with a transmittal letter addressed to the Official Draftperson.

☐ Note the attached Examiner's comment regarding REQUIREMENT FOR THE DEPOSIT OF BIOLOGICAL MATERIAL.

Any response to this letter should include, in the upper right hand corner, the APPLICATION NUMBER (SERIES CODE/SERIAL NUMBER). If applicant has received a Notice of Allowance and Issue Fee Due, the ISSUE BATCH NUMBER and DATE of the NOTICE OF ALLOWANCE should also be included.

Attachment(s)

☒ Notice of References Cited, PTO-892

☐ Information Disclosure Statement(s), PTO-1449, Paper No(s). _____

☐ Notice of Draftsperson's Patent Drawing Review, PTO-948

☐ Notice of Informal Patent Application, PTO-152

☐ Interview Summary, PTO-413

☐ Examiner's Amendment/Comment

☐ Examiner's Comment Regarding Requirement for Deposit of Biological Material

☐ Examiner's Statement of Reasons for Allowance

MEHMET B. GECKIL
PRIMARY EXAMINER

PTOL-37 (Rev. 10/95)

*U.S. GPO: 1997-417-381/62714

Notice of References Cited

Application No.	Applicant(s)		
09/034,773	Henry R. Williams Jr.,		
Examiner	Group Art Unit	Page	of
Gecki	2756	1	1

U.S. PATENT DOCUMENTS

*		DOCUMENT NO.	DATE	NAME	CLASS	SUBCLASS
*	A	6,029,165	2/22/00	Gable	707	3
*	B	6,009,422	12/28/99	Ciccarelli	707	4
	C					
	D					
	E					
	F					
	G					
	H					
	I					
	J					
	K					
	L					
	M					

FOREIGN PATENT DOCUMENTS

*		DOCUMENT NO.	DATE	COUNTRY	NAME	CLASS	SUBCLASS
	N						
	O						
	P						
	Q						
	R						
	S						
	T						

NON-PATENT DOCUMENTS

*		DOCUMENT (Including Author, Title, Source, and Pertinent Pages)	DATE
	U		
	V		
	W		
	X		

*A copy of this reference is not being furnished with this Office action.
(See Manual of Patent Examining Procedure, Section 707.05(a).)

U.S. Patent and Trademark Office
PTO-892 (Rev. 9-96)

Part of Paper No. 8

UNITED STATES DEPARTMENT OF COMMERCE
Patent and Trademark Office

NOTICE OF ALLOWANCE AND ISSUE FEE DUE

LM12/0424
BLAKELY SOKOLOFF TAYLOR & ZAFMAN
SEVENTH FLOOR
12400 WILSHIRE BOULEVARD
LOS ANGELES CA 90025

APPLICATION NO.	FILING DATE	TOTAL CLAIMS	EXAMINER AND GROUP ART UNIT	DATE MAILED
09/034,773	03/02/98	033	GECKIL, M 2756	04/24/00
First Named Applicant WILLIAMS,		35 USC 154(b) term ext. = 0 Days.		

TITLE OF INVENTION: AGENT-BASED ON-LINE INFORMATION RETRIEVAL AND VIEWING SYSTEM

ATTY'S DOCKET NO.	CLASS-SUBCLASS	BATCH NO.	APPLN. TYPE	SMALL ENTITY	FEE DUE	DATE DUE
0 03359.P004	709-202.000	L52	UTILITY	NO	$1210.00	07/24/00

THE APPLICATION IDENTIFIED ABOVE HAS BEEN EXAMINED AND IS ALLOWED FOR ISSUANCE AS A PATENT. PROSECUTION ON THE MERITS IS CLOSED.

THE ISSUE FEE MUST BE PAID WITHIN THREE MONTHS FROM THE MAILING DATE OF THIS NOTICE OR THIS APPLICATION SHALL BE REGARDED AS ABANDONED. THIS STATUTORY PERIOD CANNOT BE EXTENDED.

HOW TO RESPOND TO THIS NOTICE:

I. Review the SMALL ENTITY status shown above.
If the SMALL ENTITY is shown as YES, verify your current SMALL ENTITY status:

A. If the status is changed, pay twice the amount of the FEE DUE shown above and notify the Patent and Trademark Office of the change in status, or
B. If the status is the same, pay the FEE DUE shown above.

If the SMALL ENTITY is shown as NO:

A. Pay FEE DUE shown above, or

B. File verified statement of Small Entity Status before, or with, payment of 1/2 the FEE DUE shown above.

II. Part B-Issue Fee Transmittal should be completed and returned to the Patent and Trademark Office (PTO) with your ISSUE FEE. Even if the ISSUE FEE has already been paid by charge to deposit account, Part B Issue Fee Transmittal should be completed and returned. If you are charging the ISSUE FEE to your deposit account, section "4b" of Part B-Issue Fee Transmittal should be completed and an extra copy of the form should be submitted.

III. All communications regarding this application must give application number and batch number.
Please direct all communications prior to issuance to Box ISSUE FEE unless advised to the contrary.

IMPORTANT REMINDER: Utility patents issuing on applications filed on or after Dec. 12, 1980 may require payment of maintenance fees. It is patentee's responsibility to ensure timely payment of maintenance fees when due.

PATENT AND TRADEMARK OFFICE COPY

PTOL-85 (REV. 10-96) Approved for use through 06/30/99. (0651-0033) *U.S. GPO: 1999-454-457/24601

PART B—ISSUE FEE TRANSMITTAL

Complete and mail this form, together with applicable fees, to: **Box ISSUE FEE**
Assistant Commissioner for Patents
Washington, D.C. 20231

MAILING INSTRUCTIONS: This form should be used for transmitting the ISSUE FEE. Blocks 1 through 4 should be completed where appropriate. All further correspondence including the Issue Fee Receipt, the Patent, advance orders and notification of maintenance fees will be mailed to the current correspondence address as indicated unless corrected below or directed otherwise in Block 1, by (a) specifying a new correspondence address; and/or (b) indicating a separate "FEE ADDRESS" for maintenance fee notifications.

CURRENT CORRESPONDENCE ADDRESS (Note: Legibly mark-up with any corrections or use Block 1)

BLAKELY SOKOLOFF TAYLOR & ZAFMAN
SEVENTH FLOOR
12400 WILSHIRE BOULEVARD
LOS ANGELES CA 90025

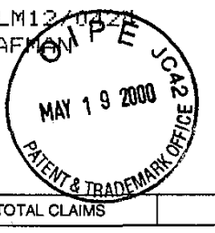

Note: The certificate of mailing below can only be used for domestic mailings of the Issue Fee Transmittal. This certificate cannot be used for any other accompanying papers. Each additional paper, such as an assignment or formal drawing, must have its own certificate of mailing.

Certificate of Mailing

I hereby certify that this Issue Fee Transmittal is being deposited with the United States Postal Service with sufficient postage for first class mail in an envelope addressed to the Box Issue Fee address above on the date indicated below.

Mary E. Buggie (Depositor's name)
Mary E. Buggie (Signature)
5/16/2000 (Date)

APPLICATION NO.	FILING DATE	TOTAL CLAIMS	EXAMINER AND GROUP ART UNIT	DATE MAILED
09/034,773	03/02/98	033	GECKIL, M 2756	04/24/00

First Named Applicant WILLIAMS, 35 USC 154(b) term ext. = 0 Days.

TITLE OF INVENTION: AGENT-BASED ON- LINE INFORMATION RETRIEVAL AND VIEWING SYSTEM

ATTY'S DOCKET NO.	CLASS-SUBCLASS	BATCH NO.	APPLN. TYPE	SMALL ENTITY	FEE DUE	DATE DUE
0 03359.P004	709-202.000	L52	UTILITY	NO	$1210.00	07/24/00

1. Change of correspondence address or indication of "Fee Address" (37 CFR 1.363). Use of PTO form(s) and Customer Number are recommended, but not required.

☐ Change of correspondence address (or Change of Correspondence Address form PTO/SB/122) attached.

☐ "Fee Address" indication (or "Fee Address" Indication form PTO/SB/47) attached.

2. For printing on the patent front page, list (1) the names of up to 3 registered patent attorneys or agents OR, alternatively, (2) the name of a single firm (having as a member a registered attorney or agent) and the names of up to 2 registered patent attorneys or agents. If no name is listed, no name will be printed.

1 Blakely, Sokoloff, Taylor & Zafman LLP
2
3

3. ASSIGNEE NAME AND RESIDENCE DATA TO BE PRINTED ON THE PATENT (print or type)
PLEASE NOTE: Unless an assignee is identified below, no assignee data will appear on the patent. Inclusion of assignee data is only appropiate when an assignment has been previously submitted to the PTO or is being submitted under separate cover. Completion of this form is NOT a subsititue for filing an assignment.

(A) NAME OF ASSIGNEE

(B) RESIDENCE: (CITY & STATE OR COUNTRY)

Please check the appropriate assignee category indicated below (will not be printed on the patent)

☐ individual ☐ corporation or other private group entity ☐ government

4a. The following fees are enclosed (make check payable to Commissioner of Patents and Trademarks):

☒ Issue Fee
☒ Advance Order - # of Copies 10

4b. The following fees or deficiency in these fees should be charged to:

DEPOSIT ACCOUNT NUMBER 02-2666
(ENCLOSE AN EXTRA COPY OF THIS FORM)

☒ Issue Fee
☒ Advance Order - # of Copies 10

The COMMISSIONER OF PATENTS AND TRADEMARKS IS requested to apply the Issue Fee to the application identified above.

(Authorized Signature) Jordan M. Becker (Reg. No. 39,602) (Date) 5/16/00

NOTE; The Issue Fee will not be accepted from anyone other than the applicant; a registered attorney or agent; or the assignee or other party in interest as shown by the records of the Patent and Trademark Office.

Burden Hour Statement: This form is estimated to take 0.2 hours to complete. Time will vary depending on the needs of the individual case. Any comments on the amount of time required to complete this form should be sent to the Chief Information Officer, Patent and Trademark Office, Washington, D.C. 20231. DO NOT SEND FEES OR COMPLETED FORMS TO THIS ADDRESS. SEND FEES AND THIS FORM TO: Box Issue Fee, Assistant Commissioner for Patents, Washington D.C. 20231

Under the Paperwork Reduction Act of 1995, no persons are required to respond to a collection of information unless it displays a valid OMB control number.

TRANSMIT THIS FORM WITH FEE

PART B—ISSUE FEE TRANSMITTAL

Complete and mail this form, together with applicable fees, to: **Box ISSUE FEE**
Assistant Commissioner for Patents
Washington, D.C. 20231

MAILING INSTRUCTIONS: This form should be used for transmitting the ISSUE FEE. Blocks 1 through 4 should be completed where appropriate. All further correspondence including the Issue Fee Receipt, the Patent, advance orders and notification of maintenance fees will be mailed to the current correspondence address as indicated unless corrected below or directed otherwise in Block 1, by (a) specifying a new correspondence address; and/or (b) indicating a separate "FEE ADDRESS" for maintenance fee notifications.

CURRENT CORRESPONDENCE ADDRESS (Note: Legibly mark-up with any corrections or use Block 1)

LM12/0424
BLAKELY SOKOLOFF TAYLOR & ZAFMAN
SEVENTH FLOOR
12400 WILSHIRE BOULEVARD
LOS ANGELES CA 90025

OIPE JC42 MAY 19 2000 PATENT & TRADEMARK OFFICE

Note: The certificate of mailing below can only be used for domestic mailings of the Issue Fee Transmittal. This certificate cannot be used for any other accompanying papers. Each additional paper, such as an assignment or formal drawing, must have its own certificate of mailing.

Certificate of Mailing

I hereby certify that this Issue Fee Transmittal is being deposited with the United States Postal Service with sufficient postage for first class mail in an envelope addressed to the Box Issue Fee address above on the date indicated below.

Mary E. Buggie (Depositor's name)
Mary E. Buggie (Signature)
5/16/2000 (Date)

APPLICATION NO.	FILING DATE	TOTAL CLAIMS	EXAMINER AND GROUP ART UNIT	DATE MAILED
09/034,773	03/02/98	033	GECKIL, M 2756	04/24/00

First Named Applicant WILLIAMS, 35 USC 154(b) term ext. = 0 Days.

TITLE OF INVENTION AGENT-BASED ON- LINE INFORMATION RETRIEVAL AND VIEWING SYSTEM

ATTY'S DOCKET NO.	CLASS-SUBCLASS	BATCH NO.	APPLN. TYPE	SMALL ENTITY	FEE DUE	DATE DUE
0 03359.P004	709-202.000	L52	UTILITY	NO	$1210.00	07/24/00

1. Change of correspondence address or indication of "Fee Address" (37 CFR 1.363). Use of PTO form(s) and Customer Number are recommended, but not required.

☐ Change of correspondence address (or Change of Correspondence Address form PTO/SB/122) attached.

☐ "Fee Address" indication (or "Fee Address" Indication form PTO/SB/47) attached.

2. For printing on the patent front page, list (1) the names of up to 3 registered patent attorneys or agents OR, alternatively, (2) the name of a single firm (having as a member a registered attorney or agent) and the names of up to 2 registered patent attorneys or agents. If no name is listed, no name will be printed.

1 Blakely, Sokoloff, Taylor & Zafman LLP
2 _____
3 _____

3. ASSIGNEE NAME AND RESIDENCE DATA TO BE PRINTED ON THE PATENT (print or type)
PLEASE NOTE: Unless an assignee is identified below, no assignee data will appear on the patent. Inclusion of assignee data is only appropiate when an assignment has been previously submitted to the PTO or is being submitted under separate cover. Completion of this form is NOT a subsititue for filing an assignment.

(A) NAME OF ASSIGNEE

(B) RESIDENCE: (CITY & STATE OR COUNTRY)

Please check the appropriate assignee category indicated below (will not be printed on the patent)
☐ individual ☐ corporation or other private group entity ☐ government

4a. The following fees are enclosed (make check payable to Commissioner of Patents and Trademarks):
☒ Issue Fee
☒ Advance Order - # of Copies 10

4b. The following fees or deficiency in these fees should be charged to:
DEPOSIT ACCOUNT NUMBER 02-2666
(ENCLOSE AN EXTRA COPY OF THIS FORM)
☒ Issue Fee
☒ Advance Order - # of Copies 10

The COMMISSIONER OF PATENTS AND TRADEMARKS IS requested to apply the Issue Fee to the application identified above.

(Authorized Signature) Jordan M. Becker (Reg. No. 39,602) (Date) 5/16/00

NOTE: The Issue Fee will not be accepted from anyone other than the applicant; a registered attorney or agent; or the assignee or other party in interest as shown by the records of the Patent and Trademark Office.

05/22/2000 HMICHAE1 00000075 09034773
01 FC:142 1210.00 OP
02 FC:561 30.00 OP

Burden Hour Statement: This form is estimated to take 0.2 hours to complete. Time will vary depending on the needs of the individual case. Any comments on the amount of time required to complete this form should be sent to the Chief Information Officer, Patent and Trademark Office, Washington, D.C. 20231. DO NOT SEND FEES OR COMPLETED FORMS TO THIS ADDRESS. SEND FEES AND THIS FORM TO: Box Issue Fee, Assistant Commissioner for Patents, Washington D.C. 20231

Under the Paperwork Reduction Act of 1995, no persons are required to respond to a collection of information unless it displays a valid OMB control number.

TRANSMIT THIS FORM WITH FEE

#9

Attorney's Docket No. 003094.P001 PATENT

IN THE UNITED STATES PATENT AND TRADEMARK OFFICE

In Re Patent Application of:	
Henry R. Williams, Jr.	Examiner: Geckil, M.
Application No.: 09/034,773	Art Unit: 2756
Filed: March 2, 1998	
For: Agent-Based On-Line Information Retrieval and Viewing System	
Date of Allowance: April 24, 2000	
Batch No.: L52	

Box Issue Fee
Assistant Commissioner for Patents
Washington, D.C. 20231

SUBMISSION OF FORMAL DRAWINGS AND PAYMENT OF ISSUE FEE

Sir:

Transmitted herewith are six (6) sheets of formal drawings for the above-identified application.

Also accompanying this Submission of Formal Drawings is (1) a check for $1,240.00 for payment of the Issue Fee and for the Advanced Order fee, and (2) an Issue Fee Transmittal form.

LJV/cak (08/28/98)

If any additional fee is required, please charge Deposit Account No. 02-2666. A duplicate of this Submission is enclosed for deposit account charging purposes.

Respectfully submitted,

BLAKELY, SOKOLOFF, TAYLOR & ZAFMAN LLP

Dated: 5/16, 2000

Jordan M. Becker
Reg. No.: 39,602

12400 Wilshire Blvd.
Seventh Floor
Los Angeles, CA 90025-1026
(408) 720-8300

I hereby certify that this correspondence is being deposited with the United States Postal Service as first class mail with sufficient postage in an envelope addressed to the Assistant Commissioner for Patents, Washington, D. C. 20231 on May 16, 2000.
(Date of Deposit)

Mary E. Buggie
(Typed or printed name of person mailing correspondence)

Mary E. Buggie
(Signature of person mailing correspondence)

5/16/2000
(Date of signature)

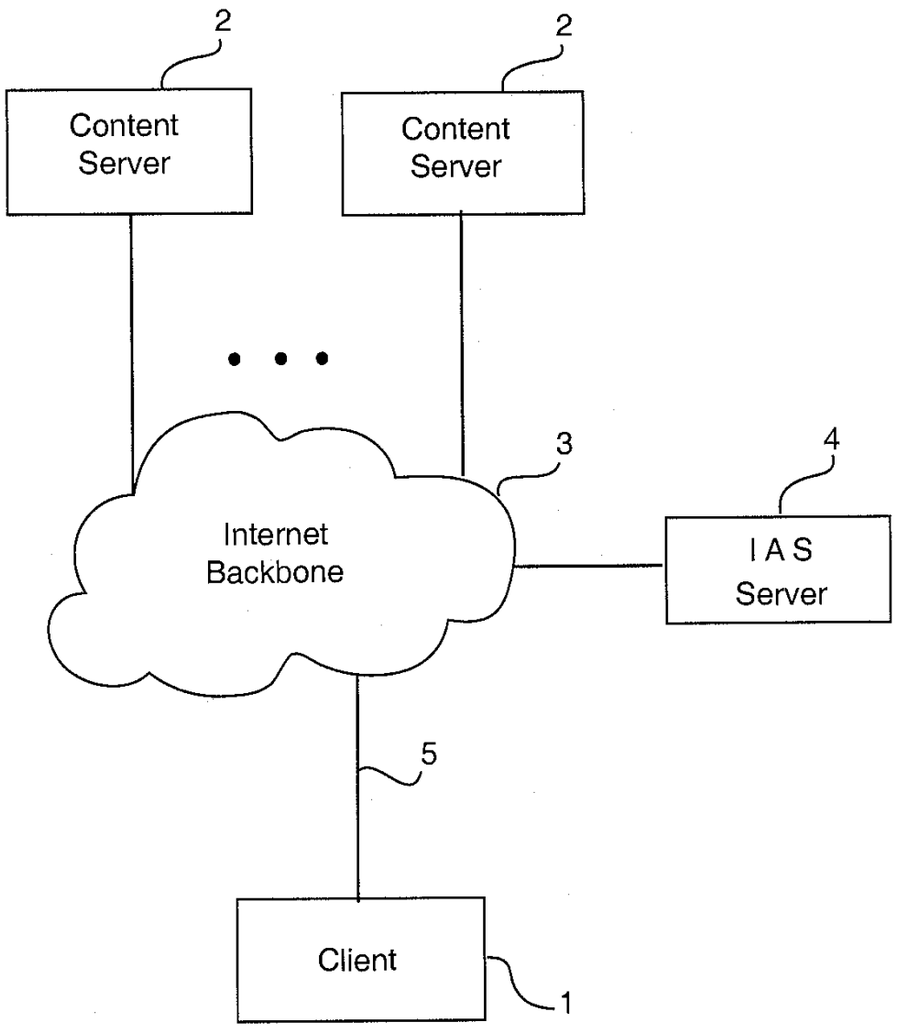
2
2
Content Server
Content Server
3
4
Internet Backbone
I A S Server
5
Client
1

FIG. 1

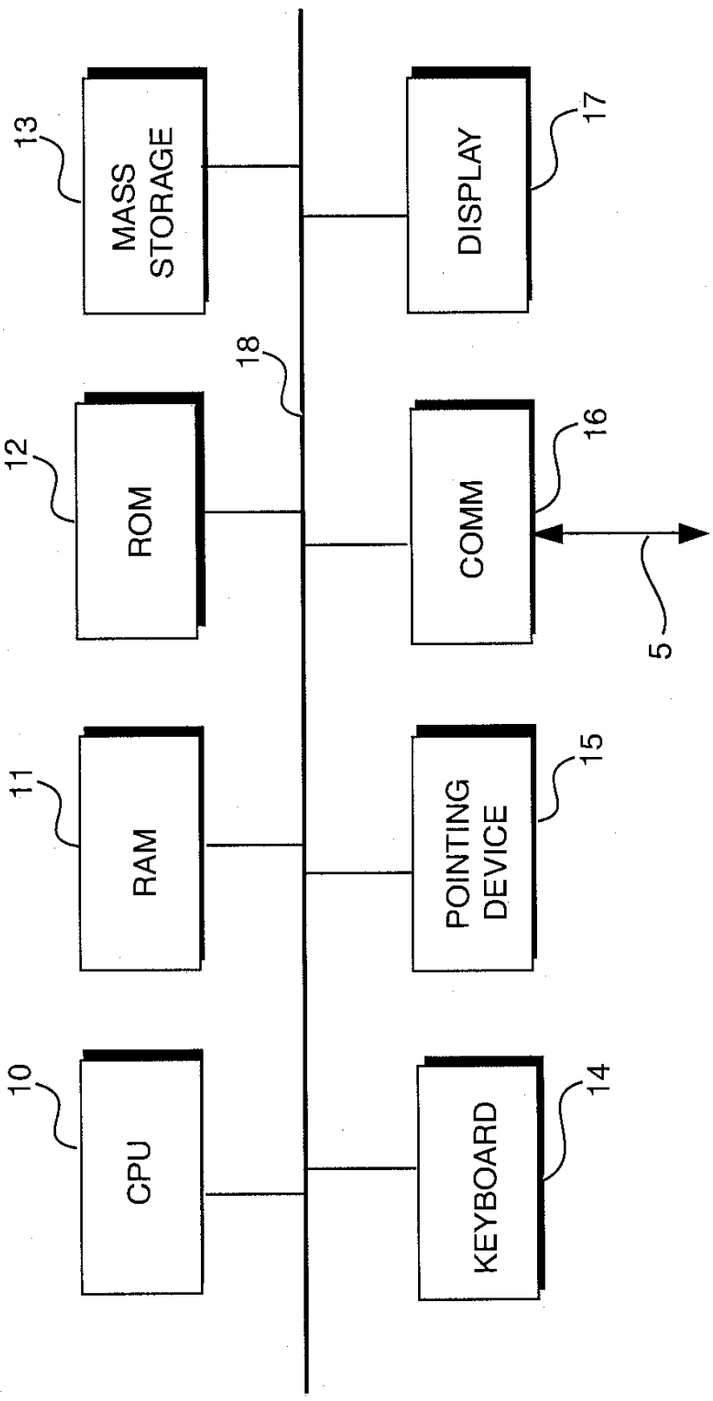
CPU
10
RAM
11
ROM
12
MASS STORAGE
13
KEYBOARD
14
POINTING DEVICE
15
COMM
16
DISPLAY
17
18
5

FIG. 2

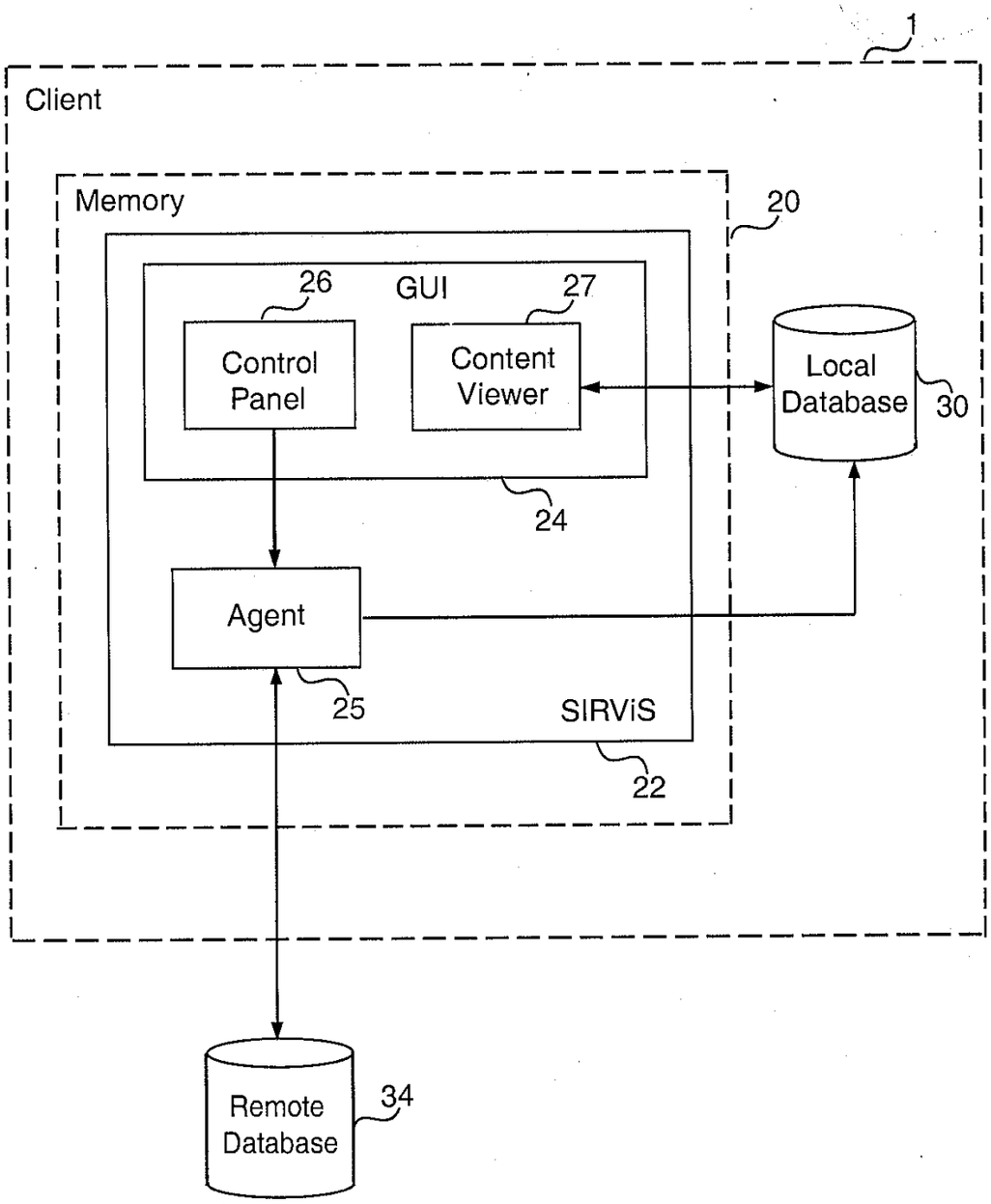
1
Client
Memory
20
26
GUI
27
Control Panel
Content Viewer
Local Database
30
24
Agent
25
SIRViS
22
Remote Database
34

FIG. 3

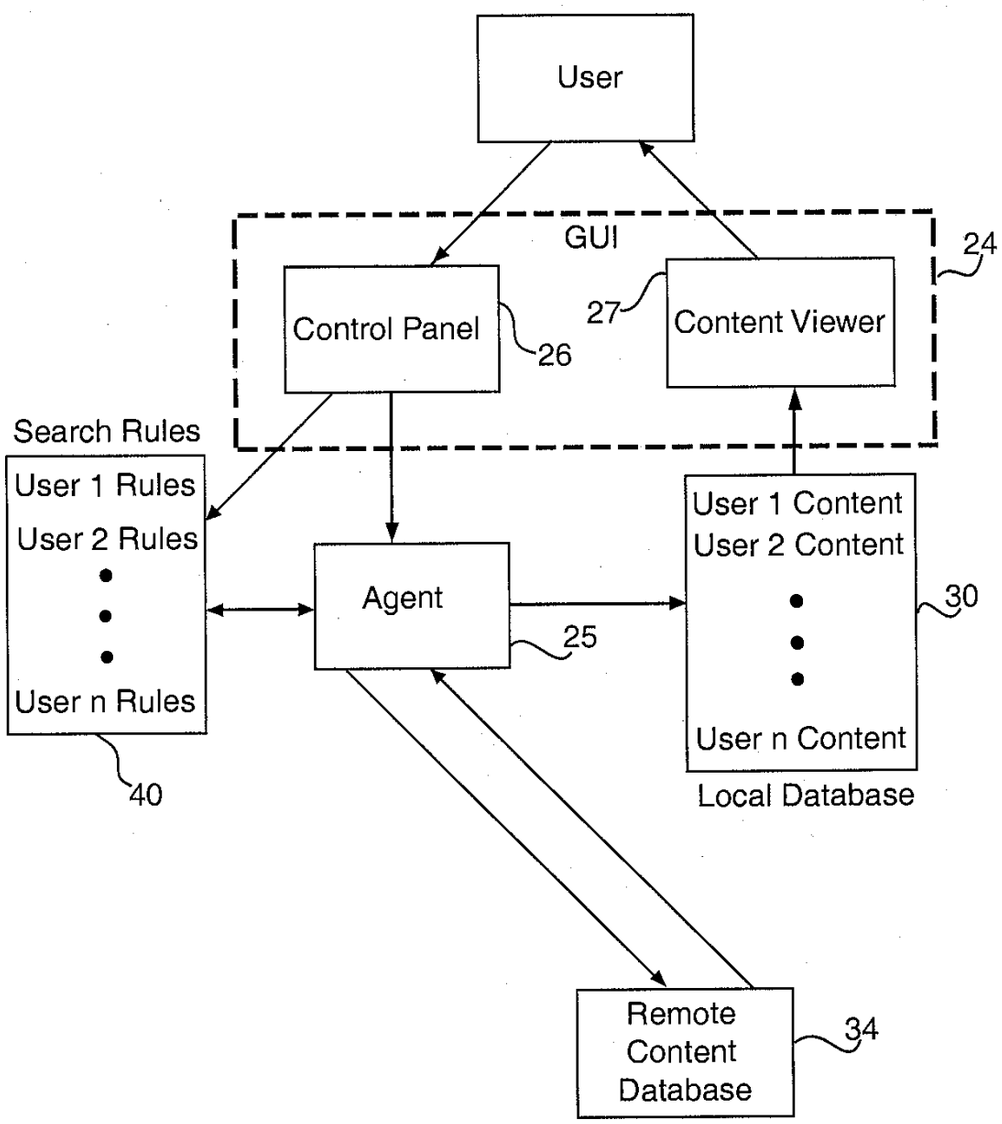
User
GUI
24
Control Panel
26
27
Content Viewer
Search Rules
User 1 Rules
User 2 Rules
User n Rules
40
Agent
25
User 1 Content
User 2 Content
User n Content
30
Local Database
Remote
Content
Database
34

FIG. 4

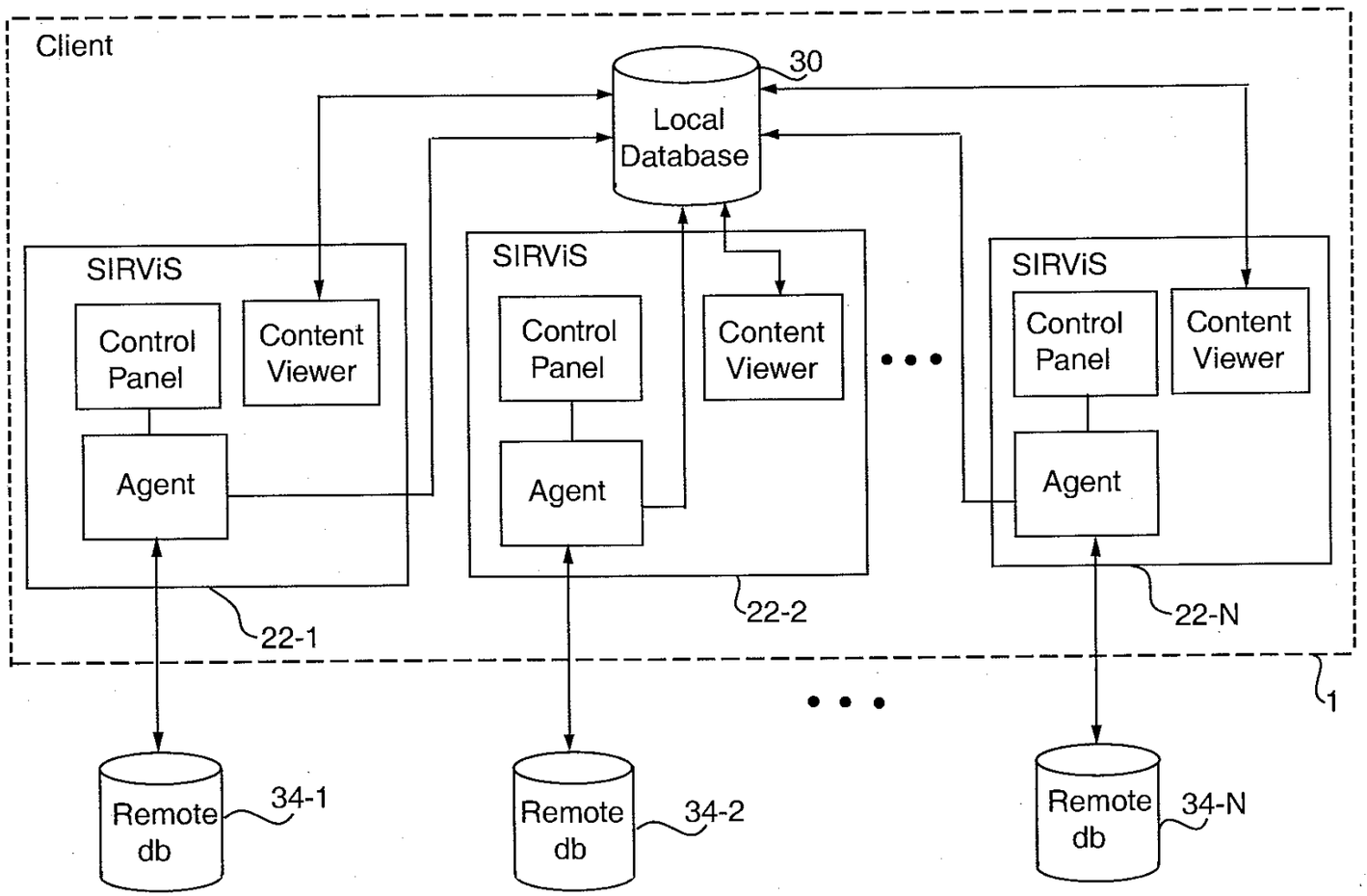
Client
30
Local Database
SIRViS
Control Panel
Content Viewer
Agent
22-1
SIRViS
Control Panel
Content Viewer
Agent
22-2
SIRViS
Control Panel
Content Viewer
Agent
22-N
1
Remote db
34-1
Remote db
34-2
Remote db
34-N

FIG. 5

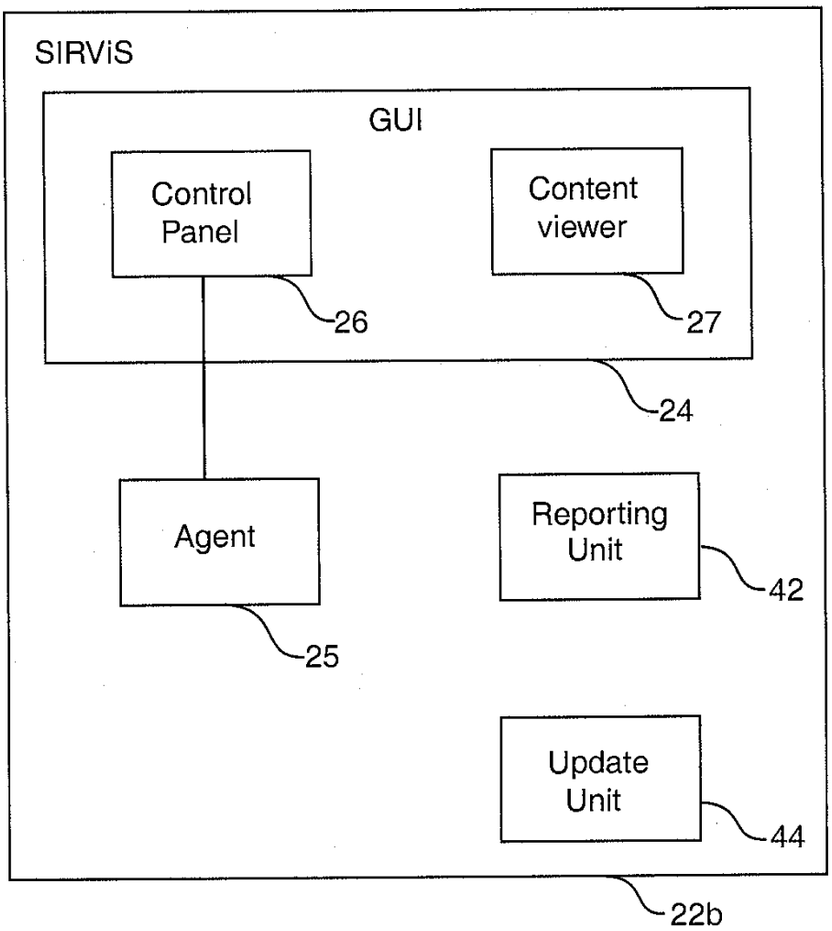
SIRViS
GUI
Control Panel
26
Content viewer
27
24
Agent
25
Reporting Unit
42
Update Unit
44
22b

FIG. 6

B.D

Attorney's Docket No. 003094.P001 PATENT

IN THE UNITED STATES PATENT AND TRADEMARK OFFICE

In Re Patent Application of:	
Henry R. Williams, Jr.	Examiner: Geckil, M.
Application No.: 09/034,773	Art Unit: 2756
Filed: March 2, 1998	
For: Agent-Based On-Line Information Retrieval and Viewing System	
Date of Allowance: April 24, 2000	
Batch No.: L52	

Box Issue Fee
Assistant Commissioner for Patents
Washington, D.C. 20231

SUBMISSION OF FORMAL DRAWINGS AND PAYMENT OF ISSUE FEE

Sir:

Transmitted herewith are six (6) sheets of formal drawings for the above-identified application.

Also accompanying this Submission of Formal Drawings is (1) a check for $1,240.00 for payment of the Issue Fee and for the Advanced Order fee, and (2) an Issue Fee Transmittal form.

LJV/cak (08/28/98)

If any additional fee is required, please charge Deposit Account No. 02-2666. A duplicate of this Submission is enclosed for deposit account charging purposes.

Respectfully submitted,

BLAKELY, SOKOLOFF, TAYLOR & ZAFMAN LLP

Dated: 5/16, 2000

Jordan M. Becker
Reg. No.: 39,602

12400 Wilshire Blvd.
Seventh Floor
Los Angeles, CA 90025-1026
(408) 720-8300

I hereby certify that this correspondence is being deposited with the United States Postal Service as first class mail with sufficient postage in an envelope addressed to the Assistant Commissioner for Patents, Washington, D. C. 20231 on May 16, 2000.
(Date of Deposit)

Mary E. Buggie
(Typed or printed name of person mailing correspondence)

Mary E. Buggie
(Signature of person mailing correspondence)

5/16/2000
(Date of signature)

UNITED STATES DEPARTMENT OF COMMERCE
Patent and Trademark Office

ASSISTANT SECRETARY AND COMMISSIONER
OF PATENTS AND TRADEMARKS
Washington, D.C. 20231

CHANGE OF ADDRESS/POWER OF ATTORNEY

FILE LOCATION 9200 SERIAL NUMBER 08772618 PATENT NUMBER 6108684

THE CORRESPONDENCE ADDRESS HAS BEEN CHANGED TO CUSTOMER # 24319

THE PRACTITIONERS OF RECORD HAVE BEEN CHANGED TO CUSTOMER # 24319

THE FEE ADDRESS HAS BEEN CHANGED TO CUSTOMER # 24319

ON 08/09/01 THE ADDRESS OF RECORD FOR CUSTOMER NUMBER 24319 IS:

LSI Logic Corporation
1551 McCarthy Blvd.
M/S: D-106 Patent Department
Milpitas CA 95035

AND THE PRACTITIONERS OF RECORD FOR CUSTOMER NUMBER 24319 ARE:

28659 29431 33807 38423 39714 43331

PTO INSTRUCTIONS: PLEASE TAKE THE FOLLOWING ACTION WHEN THE CORRESPONDENCE ADDRESS HAS BEEN CHANGED TO CUSTOMER NUMBER: RECORD, ON THE NEXT AVAILABLE CONTENTS LINE OF THE FILE JACKET, 'ADDRESS CHANGE TO CUSTOMER NUMBER'. LINE THROUGH THE OLD ADDRESS ON THE FILE JACKET LABEL AND ENTER ONLY THE 'CUSTOMER NUMBER' AS THE NEW ADDRESS. FILE THIS LETTER IN THE FILE JACKET. WHEN ABOVE CHANGES ARE ONLY TO FEE ADDRESS AND/OR PRACTITIONERS OF RECORD, FILE LETTER IN THE FILE JACKET.
THIS FILE IS ASSIGNED TO GAU 2755.

PTO-FMD

UNITED STATES DEPARTMENT OF COMMERCE
Patent and Trademark Office

ASSISTANT SECRETARY AND COMMISSIONER
OF PATENTS AND TRADEMARKS
Washington, D.C. 20231

CHANGE OF ADDRESS/POWER OF ATTORNEY

FILE LOCATION 9200 SERIAL NUMBER 08772618 PATENT NUMBER 6108684

THE CORRESPONDENCE ADDRESS HAS BEEN CHANGED TO CUSTOMER # 24319

THE PRACTITIONERS OF RECORD HAVE BEEN CHANGED TO CUSTOMER # 24319

THE FEE ADDRESS HAS BEEN CHANGED TO CUSTOMER # 24319

ON 08/09/01 THE ADDRESS OF RECORD FOR CUSTOMER NUMBER 24319 IS:

LSI Logic Corporation
1551 McCarthy Blvd.
M/S: D-106 Patent Department
Milpitas CA 95035

AND THE PRACTITIONERS OF RECORD FOR CUSTOMER NUMBER 24319 ARE:

28659 29431 33807 38423 39714 43331

PTO INSTRUCTIONS: PLEASE TAKE THE FOLLOWING ACTION WHEN THE CORRESPONDENCE ADDRESS HAS BEEN CHANGED TO CUSTOMER NUMBER: RECORD, ON THE NEXT AVAILABLE CONTENTS LINE OF THE FILE JACKET, 'ADDRESS CHANGE TO CUSTOMER NUMBER'. LINE THROUGH THE OLD ADDRESS ON THE FILE JACKET LABEL AND ENTER ONLY THE 'CUSTOMER NUMBER' AS THE NEW ADDRESS. FILE THIS LETTER IN THE FILE JACKET. WHEN ABOVE CHANGES ARE ONLY TO FEE ADDRESS AND/OR PRACTITIONERS OF RECORD, FILE LETTER IN THE FILE JACKET.
THIS FILE IS ASSIGNED TO GAU 2755.

PTO-FMD

WEST

Help Logout

Main Menu | Search Form | Posting Counts | Show S Numbers | Edit S Numbers

Search Results -

Terms	Documents
l15 same (remote or server or user$1 or agent$1 or predefined or specified or rule$1)	18

Database: US Patents Full-Text Database

Refine Search:

```
l15 same (remote or server or user$1 or
agent$1 or predefined or specified or
rule$1)
```

Search History

DB Name	Query	Hit Count	Set Name
USPT	l15 same (remote or server or user$1 or agent$1 or predefined or specified or rule$1)	18	L16
USPT	l13 same remote	18	L15
USPT	l13 same (search$ or quer$)	3	L14
USPT	l12 same (topic$1 or subject$1 or categor$ or type$1)	99	L13
USPT	l11 same (retriev$ or receiv$ or download$ or transmit$)	449	L12
USPT	l10 same (information or result$ or file$ or record$)	1038	L11
USPT	l9 same (computer or database or data adj base)	1894	L10
USPT	(saving or storing) same local	7045	L9
USPT	l6 same local	9	L8
USPT	l6 same (remote)	2	L7
USPT	l1 same (rule$1 or database or search$)	369	L6
USPT	l2 and l1	0	L5
USPT	l2 same l1	0	L4
USPT	l2 with (predefin$ or topic$1 or subject$1 or categor$1)	2	L3
USPT	search adj2 rule$1	166	L2
USPT	search adj2 agent	369	L1

Document Number 2

Entry 2 of 3 File: USPT Aug 19, 1997

DOCUMENT-IDENTIFIER: US 5659596 A
TITLE: System for location of communication end users

ABPL:
A system for location of communication end users including a plurality of wide area networks which control the transmission of voice, data, file and other types of messages in a preconfigured exchange area, each area network including a plurality of local servicing offices controlled by a central regional service point wherein the local servicing offices track, monitor and receive user specific information from users within their designated area and which respond to search requests from the regional service points, the regional service points providing an interface to other wide area networks for complete global communication and location of communication end users. The local servicing offices and regional service points are computer based systems controlled by microprocessors and having databases for permanently and temporarily storing predetermined end user information and messages from and intended for selected end users, whereby the local servicing offices and regional service points communicate with each other and with other wide area networks via a physical communication network which provides communication links between the networks and the end users whether wireless or wired.

Document Number 11

Entry 11 of 18 File: USPT Feb 7, 1995

DOCUMENT-IDENTIFIER: US 5388196 A
TITLE: Hierarchical shared books with database

DEPR:
Reference is now made to a typical office information system 10 illustrated in FIGS. 1 and 2. System 10 includes an Ethernet local area network (LAN) 12, to which a number of user workstations 14, including workstations 14A and 14B, are connected. Workstations 14 may be, for example, the Xerox 6085 professional workstation. LAN 12 may also have other office connected equipment such as network file server 16, network file/mail/communication server 18, printer server 20 and printer 22. Also, a large capacity remote storage facility, such as a UNIX mini computer 24 may be connected to LAN 12. System 10 is a collaborative type system, meaning that it enables users at different workstations 14 to work together in real-time by processing and passing information among one another and storing and retrieving information from storage services 16 and 24 via network 12. The collaborative functions of system 10 could also be centralized in a single main CPU, could be distributed among processors at the workstations, or could be provided in any combination of centralization and distribution. Similarly, LAN 12 could take any appropriate configuration capable of providing the necessary communications to support collaboration.

Document Number 12

Entry 12 of 18 File: USPT Jun 15, 1993

DOCUMENT-IDENTIFIER: US 5220657 A
TITLE: Updating local copy of shared data in a collaborative system

DEPR:
Reference is now made to a typical office information system 10 illustrated in FIG. 1. System 10 includes an Ethernet local area network (LAN) 12, to which a number of user workstations 14, including workstations 14A and 14B, are connected. Workstations 14 may be, for example, the Xerox 6085 professional workstation. LAN 12 may also have other office connected equipment such as network file server 16, network file/mail/communication server 18, printer server 20 and printer 22. Also, a large capacity remote storage facility, such as a UNIX mini computer 24 may be connected to LAN 12. System 10 is a collaborative type system, meaning that it enables users at different workstations 14 to work together in real-time by processing and passing information among one another and storing and retrieving information from storage services 16 and 24 via network 12. The collaborative functions of system 10 could also be centralized in a single main CPU, could be distributed among processors at the workstations, or could be provided in any combination of centralization and distribution. Similarly, LAN 12 could take any appropriate configuration capable of providing the necessary communications to support collaboration.

Document Number 13

Entry 13 of 18 File: USPT Nov 12, 1991

DOCUMENT-IDENTIFIER: US 5065347 A
TITLE: Hierarchical folders display

DEPR:
Reference is now made to a typical office information system 10 illustrated in FIGS. 1 and 2. System 10 includes an Ethernet local area network (LAN) 12, to which a number of user workstations 14, including workstation 14A is connected. Workstations 14 may be, for example, the Xerox 6085 professional workstation. Lan 12 may also have other office connected equipment such as network file server 16, network file/mail/communication server 18, printer server 20 and printer 22. Also, a large capacity remote storage facility, such as UNIX mini computer 24 may be connected to Lan 12. System 10 is a collaborative type system, meaning that it enables users at different workstations 14 to work together in real time by processing and passing information among one another and storing and retrieving information from storage services 16 and 24 via network 12. The collaborative functions of system 10 could also be centralized in a single main CPU, could be distributed among processors at the workstations, or could be provided in any combination of centralization and distribution. Similarly, Lan 12 could take any appropriate configuration capable of providing the necessary communications to support collaboration.

Document Number 14

Entry 14 of 18 File: USPT Apr 16, 1991

DOCUMENT-IDENTIFIER: US 5008853 A
TITLE: Representation of collaborative multi-user activities relative to shared structured data objects in a networked workstation environment

DEPR:
Reference is now made to a typical office information system 10 illustrated in FIG. 1. System 10 includes an Ethernet local area network (LAN) 12, to which a number of user workstations 14, including workstations 14A and 14B, are connected. Workstations 14 may be, for example, the Xerox 6085 professional workstation. LAN 12 may also have other office connected equipment such as network file server 16, network file/mail/communication server 18, printer server 20 and printer 22. Also, a large capacity remote storage facility, such as a UNIX mini computer 24 may be connected to LAN 12. System 10 is a collaborative type system, meaning that it enables users at different workstations 14 to work together in real-time by processing and passing information among one another and storing and retrieving information from storage services 16 and 24 via network 12. The collaborative functions of system 10 could also be centralized in a single main CPU, could be distributed among processors at the workstations, or could be provided in any combination of centralization and distribution. Similarly, LAN 12 could take any appropriate configuration capable of providing the necessary communications to support collaboration.

Document Number 17

Entry 17 of 18 File: USPT Nov 12, 1985

DOCUMENT-IDENTIFIER: US 4553222 A
TITLE: Integrated interactive restaurant communication system for food and entertainment processing

CLPR:
1. An interactive integrated restaurant information communication system for enabling both individualized food and entertainment interactive information communication with a central remote data base from each of a plurality of different multipurpose table station terminals utilizable by a plurality of different restaurant patrons, said system comprising a central computer means for remotely retrievably storing information comprising a plurality of food menu modules and entertainment modules for selective retrieval of said remotely stored information by each of said table station terminals over a common transmission media and for processing information received from each of said table station terminals; and a plurality of said table station terminals, each of said table station terminals comprising microcomputer means for controlling the operation thereof, said microcomputer means being connected to said common transmission media for receiving and transmitting information between said central computer means and said table station terminals, each of said table station terminals further comprising food and entertainment selection and control means connected to said microcomputer means for enabling retrievable selection of said remotely stored food and entertainment modules from said central computer means and interaction therewith at said table station terminal, a local storage means connected to said microcomputer means for locally storing said selected ones of said food and entertainment modules and a common local video type display means connected to said microcomputer means and said common transmission media for connecting each of said table station terminals to said central computer means for enabling communication of said respective information therebetween and for commonly displaying data corresponding to said selected module; each of said remotely stored food and entertainment modules information comprising a different set of control instructions for said table station terminal, each of said sets of control instructions corresponding to a different selectable food menu or entertainment function respectively, for said terminal, said information transmittable from said central computer means over said common transmission media comprising said retrievably stored sets of control instructions for down-line loading of said local storage means at said table station terminal of a selected set of said control instructions in response to a request therefor by a restaurant patron via said selection means, said sets of control instructions for said table station terminal comprising sets of control instructions for said microcomputer means; each of table station terminals further comprising means connectable to said microcomputer means, to said selection means and to said local storage means for selectively controlling the local storage of said remotely transmitted information in said local storage means dependent on at least said selected interactive food or entertainment function for said terminal, said microcomputer means being operable in accordance with at least a first one of said locally stored remotely transmitted selected sets of control instructions and comprising means capable of processing incoming data provided via said

selection and control means in accordance therewith, processed food menu selection data processed by said incoming data processing means being transmittable from said table station terminal to said central computer means over said common transmission media, said central computer means further comprising central display means for commonly displaying said processed food menu selection data from said plurality of table station terminals, said remotely stored entertainment modules comprising interactive activities, said microcomputer incoming data processing means comprising means capable of processing incoming interactive entertainment activity data provided from said selection and control means corresponding to a selected down-line loaded interactive entertainment activity for providing a displayable processed output therefrom on said common local video type display means; whereby each table station terminal may independently provide both interactive entertainment and food selection on a common video type display terminal in cooperation with a central data base.

Document Number 2

Entry 2 of 18 File: USPT Nov 23, 1999

DOCUMENT-IDENTIFIER: US 5991760 A
TITLE: Method and apparatus for modifying copies of remotely stored documents using a web browser

DEPR:
In addition to downloading certain web pages between the root node and a preselected number of levels below the root node, the CFHD process also may be configured to download, in preselected instances, web pages on servers that are remote from the server having the root web page. The details of downloading such web pages are discussed in greater detail below with reference to FIGS. 10 through 11E. Although the CFHD process may be implemented with default values for all of the necessary parameters, the preselected maximum number of levels below the selected web page may be chosen before the CFHD button 400 is selected. Accordingly, a configure button 402 may be included that enables a user to preselect the maximum number of levels to download onto the client computer 200 from the web site. In addition, the configure button 402 also may include a number of other "filtering" parameters that prevent the computer from downloading and storing certain web pages from the web site (i.e., "filtering" the web pages). One such filtering parameter, for example, may enable the client computer 200 to store only web pages that are less than a preselected size. Web pages that are greater than the preselected size thus are not stored. Another filtering parameter may prevent the client computer 200 from storing web pages resident on network devices that are remote from the network device on which the selected web page is located. Such filtering parameter thus ensures that each of the stored web pages originates from the same remote network device. Yet another filtering parameter may prevent the client computer 200 from storing web pages that are not a preselected type. A type of file is identified by an extension at the end of a URL. For example, no graphic image files (having the extension ".gif") will be stored if such files are selected to be filtered. Similarly, the filtering parameters may be selected to filter out portions of web pages that are in a preselected format. For example, only the text in HTML (Hypertext Markup Language) web pages having both text and references to graphic image files (GIF files having the suffix ".gif") may be downloaded onto the local computer. It should be noted, however, that any combination of the above noted filtering parameters may be selected.

Document Number 6

Entry 6 of 9 File: USPT Jul 6, 1999

DOCUMENT-IDENTIFIER: US 5920856 A
TITLE: System for selecting multimedia databases over networks

DEPR:
The network architecture of the meta-server/database invention is shown in FIG. 1. As can be seen from this figure, the three main components are multimedia database systems at web sites 1, a web server 2 consisting of a search agent and a meta-database, and a set of web applications at web clients/browsers 3. Each multimedia database system manages the insertion, deletion, and update of the media data stored in the local database. The meta-database records information needed for database sites selection. This information is generated by a refining module (see FIG. 2) located within the search agent by observing the pattern of responses of various databases to user's queries. The search agent at the web server indexes into the meta-database to derive a set of target multimedia database sites and poses the queries to them in their respective acceptable forms.

Document Number 1

Entry 1 of 2 File: USPT Nov 2, 1999

DOCUMENT-IDENTIFIER: US 5978768 A
TITLE: Computerized job search system and method for posting and searching job openings via a computer network

DEPR:
As shown in FIG. 20, which is a state diagram illustrating examples of the operations 170 that the remote site computer program controls the remote site computer 44 to perform, the remote site program is capable of controlling the remote site computer 44 to perform an uploading operation 172 in which a computer readable file is uploaded from the company computer 42. As further illustrated, the remote site program controls the remote site computer 44 to perform a job search operation 174, a personal search agent operation 176, a job export operation 178 and a content magazine operation 180, all of which are described in detail below.

DEPR:
The off-site program is also capable of controlling the off-site computer 44 to perform a personal search agent operation 176 (FIG. 20) for the job seeker beginning at step 1900 in FIG. 25. Specifically, if the job seeker select this feature, the information at the remote Web site, which has been created by the remote site computer 44, causes the job seeker's computer 40 in step 1910 to display on its display screen instructions for the job seeker to enter information pertaining to the position in which the job seeker is interested. The job seeker can also enter information in step 1920 indicating that the "search agent" is to be a constant search agent which monitors new position postings on, for example, a daily basis.

Document Number 7

Entry 7 of 9 File: USPT Mar 31, 1998

DOCUMENT-IDENTIFIER: US 5734651 A
TITLE: Transaction message routing in digital communication networks

DEPR:
If the value of the NodeName field is null (which it would be if the message were received from a local agent or local Routing Agent Program (RAP), but which can never be the case if this message is received from a pipe), the RS assumes that the message is destined from some agent or RAP on this node. As will be described later, this may not be the case. If the NodeName field in the top element of the NAPS stack contains either the name of this node or is null, decision box 73 assumes that the destination agent is this node and goes to decision box 75 to search the Local Agent Table (TABLE 1 above). The Local Agent Table is a list of all agents and Routing Agent Programs (RAPS) that are actively running on this node. If an entry matching the agent name field is found, box 84 is entered where the message is queued to the agent or RAP identified in the Local Agent Table. Box 85 is then entered to return an acknowledgment to the calling program and the process of FIG. 3 terminated in box 86. If the name is not found in the Local Agent Table, as determined by decision box 75, or if the agent name in the NAPS is null, box 76 is entered to attempt to edit the address element at the top of the NAPS. This editing process is described in detail in connection with FIGS. 4 and 5.

Document Number 8

Entry 8 of 9 File: USPT Oct 8, 1996

DOCUMENT-IDENTIFIER: US 5563878 A
TITLE: Transaction message routing in digital communication networks

DEPR:
If the value of the NodeName field is null (which it would be if the message were received from a local agent or local Routing Agent Program (RAP), but which can never be the case if this message is received from a pipe), the RS assumes that the message is destined from some agent or RAP on this node. As will be described later, this may not be the case. If the NodeName field in the top element of the NAPS stack contains either the name of this node or is null, decision box 73 assumes that the destination agent is this node and goes to decision box 75 to search the Local Agent Table (TABLE 1 above). The Local Agent Table is a list of all agents and Routing Agent Programs (RAPS) that are actively running on this node. If an entry matching the agent name field is found, box 84 is entered where the message is queued to the agent or RAP identified in the Local Agent Table. Box 85 is then entered to return an acknowledgment to the calling program and the process of FIG. 3 terminated in box 86. If the name is not found in the Local Agent Table, as determined by decision box 75, or if the agent name in the NAPS is null, box 76 is entered to attempt to edit the address element at the top of the NAPS. This editing process is described in detail in connection with FIGS. 4 and 5.

Document Number 9

Entry 9 of 9 File: USPT Jan 9, 1990

DOCUMENT-IDENTIFIER: US 4893301 A
TITLE: Automatic call distribution (ACD) switching system having distributed processing capability

DEPR:
By way of example only, assume a Customer Service call enters the network in City A with a priority of 1. After 10 seconds, the search for an available agent is expanded to include a backup group of agents. Then, after 10 additional seconds, the priority is increased to 2 and the call is offered to City B where a second ACD shelf resides. When the call arrives at City B, a route is specified that processes the call beginning at the priority 2 level and looks for any available agent in either the Customer Service group or its backup. As a priority 2 call, the call from City A will be handled over any local calls in City B that have been waiting less than 20 seconds (i.e. assuming City B local calls maintain a priority 1 level for the first 20 seconds in queue). However, any local City B calls that have been waiting more than 20 seconds can be escalated to priority 2 and serviced accordingly with the City A arrival. The overflow structure of calls from City B to City A can be designed via Routing Tables to offer the same equal distribution amongst the City A agents based upon longest call waiting within the highest priority level.

Document Number 3

Entry 3 of 3 File: USPT

DOCUMENT-IDENTIFIER: US 4845658 A
TITLE: Information method and apparatus using simplex and duplex communications

ABPL:
An information delivery method and apparatus uses a simplex channel from a central data base site for transmitting data stored at the site to a plurality of remote local terminals. The local terminals receive the broadcast data and selectively store a subset of the data. The local terminals can process user initiated queries directed to the stored data, and determine whether the data is available at the local terminal or at the central data base site. The local terminal can automatically access data not available in its data base. The remote local terminal has a facility for selectively storing only that information of particular interest to the local user and provides for listing desired information in a prioritized fashion and allocating memory to each category. A predicate data base model is developed for advantageously storing the information.

WEST

Freeform Search

Database: US Patents Full-Text Database

Term: l5 same (search$ or topic$1 or subject$1)

Display 10 **Documents in Display Format:** CIT

Generate: ○ **Hit List** ◉ **Hit Count** ○ **Image**

Search | Clear | Help | Logout

Main Menu | Show S Numbers | Edit S Numbers

Search History

DB Name	Query	Hit Count	Set Name
USPT	l5 same (search$ or topic$1 or subject$1)	8	L6
USPT	l4 same (stor$ or sav$ or record$1 or structur$)	157	L5
USPT	l2 same l3	282	L4
USPT	(remot$ or network) with (database or data adj base)	8324	L3
USPT	local adj (database or data adj base)	780	L2
USPT	stor$ with local adj (database or data adj base)	248	L1

WEST

Help Logout

Main Menu | Search Form | Posting Counts | Show S Numbers | Edit S Numbers

Search Results -

Terms	Documents
l32 and l10	3

Database: US Patents Full-Text Database

Refine Search: `l32 and l10`

Search History

DB Name	Query	Hit Count	Set Name
USPT	l32 and l10	3	L33
USPT	l31 and l23	5	L32
USPT	l30 and l28	8	L31
USPT	l29 and l28	8	L30
USPT	707/? [ccls]	2874	L29
USPT	search adj agent	100	L28
USPT	l24 and l11	15	L27
USPT	l24 and l10	21	L26
USPT	l24 same l10	0	L25
USPT	l22 same (structured or sql)	101	L24
USPT	l22 and (structured or sql)	468	L23
USPT	l21 same (user$1 or agent or computer or program or interface or browser)	1759	L22
USPT	l20 same (retriev$ or information or local or database)	3301	L21
USPT	search same (criteria or parameter$ or operator$ or boolean)	8673	L20
USPT	l18 same l17	1	L19
USPT	search adj criteria	628	L18
USPT	local adj user$1	794	L17
USPT	l15 and l14	10	L16
USPT	retriev$	85652	L15
USPT	l13 and l3	11	L14
USPT	l11 and l4	53	L13
USPT	l11 same l4	0	L12
USPT	l10 same (search$ or query$)	3862	L11
USPT	(subject or topic) same (defin$ or select$ or search$)	65893	L10

USPT	l7 and l6	4	L9
USPT	l7 and l5	26	L8
USPT	rule$1	107853	L7
USPT	l4 same l3	7	L6
USPT	l4 and l3	42	L5
USPT	local adj (database or data adj base)	717	L4
USPT	agent same (search$ or query)	3342	L3
USPT	l1 same rules	2	L2
USPT	agent same search same engine	45	L1

(7)

SearchPad International Product Review on The Computer Answer Guy

---

On February 21st 1998, 9.00 A.M, New Jersey, USA

By **Jeff Yablon**

You know, it looks to me like this Internet thing is here to stay.

You may think that's a pretty funny thing to say, but there have been continuing comments about the Internet's demise in my business for about three years already. No kidding; before you ever even HEARD of the place everybody's dying to be, the folks I spend my week talking to were saying it would never fly, and after you got excited about it they started saying that you were gonna ruin it, and THEN they said that it couldn't possibly keep up with how many people wanted on.

So now you're there. Know what? The so-called experts and you finally AGREE on something: it STINKS when you go to Yahoo or Alta Vista or whatever it is you like using to find stuff and type in a search request and get back like 31 MILLION matches.

Well, if you don't mind spending too much for the privilege, the solution is here. It's called SearchPad. It comes from a company in India! yep, India! called Satyam Spark Solutions ***, and what it is, is a piece of software that scours the Internet using as many of the major search engines as you like ALL AT THE SAME TIME.

Now, I'll tell you what. That's pretty cool, but it isn't exactly new, or unique and SURE isn't worth the $150 *** price of this thing. But SearchPad then does something else that's amazing.

It learns!!!

SearchPad lets you tell it how you feel about the results it gives you. Think about something: if you type 'Tupperware' into Yahoo, you get back 14 matches, most of which are PAID FOR. On the other side of things, type the same word at HOTBOT, and you get over 11,000 matches. Neither one of those really works. HotBot gave you too much information to be useful, and Yahoo will help you if you wanna buy Tupperware from someone who paid to be listed in their search engine, but what if . . . no, I can't REALLY imagine this, but play with me . . . you were doing a research paper on Tupperware. Its results are worthless.

When I used SearchPad to look for 'Tupperware', though, and told it to use nine search engines all at the same time and report only the top ten matches at each one, I got back about thirty matches. The number was more manageable, represented a cross-section of the kinds of stuff that different search engines thought were important, AND SearchPad eliminated duplicates.

Cool.

But then, things got REALLY interesting.

SearchPad can be taught to exclude non-English-language pages, which as an 'Arrogant American' makes me very happy. In fact, it can be taught all KINDS of things about how you like your searches to work. Tell SearchPad that you like it when a particular word occurs with so many words of something ELSE you think is important, and it will keep that rule in mind the next time you ask it to find something. I'll say it again: **IT LEARNS**. The more you use SearchPad, the better it gets at finding what YOU want it to find.

Now I'll tell you what: explaining yourself to SearchPad is a little more complicated than it should be, but you know what, I've never seen something worth having that wasn't a little bit painful. I'm also a little confused yet about what software to use when I get on the Internet, because SearchPad uses a built-in browser to show you pages. Is that a great idea? How am I supposed to keep track of when to switch back and forth between Internet Explorer and SearchPad ? Bugs me.

Finally, there's the price. SearchPad costs $150 ***, and I'll tell you what, its worth every penny. But that's easy for me to say, because I got my copy free. You can try out SearchPad for thirty days without paying for it, but then you have to cough up the buck- fifty to keep using it, and I have a feeling that no matter HOW great it is, that price is just TOO STEEP.

Listen, go try it for yourself. SearchPad runs on Windows 95 or Windows NT, and you can get your copy right now by surfing to http://www.searchpad.com. And then tell me after thirty days whether you think it's worth paying for, AND whether you're gonna go for it.

Audio available on
(www.answerguy.com/audio/archive/SearchPad.html)

***** Please Note :**
1. The software now costs US$59.95.
2. The above mentioned Satyam Spark Solutions has merged into its parent company Satyam Computer Services Ltd, and no longer exists.

salesinfo@bet.satyam.com.
SearchPad is a trademark of Satyam Computer Services Ltd
Copyright © 1997 Satyam Computer Services Ltd

(6)

Web Searching Gets a Local Lift

Searching the Web these days isn't so tough, but it can be tedious. That's why Satyam Spark Solutions *** of Bangalore, India, came up with its SearchPad software.

As the company told Crusty, "When the SearchPad find engine goes calling on all those Web search engines, it helps to know where the doorbell is, figuratively speaking. The new SearchPad 1.1, release 2, catches up with the formatting changes many of the search engines implemented over the last couple of months. It also updates its robotdll.dll to get around some Microsoft Dynamic Link Library conflicts that many Internet Explorer and Communicator users experienced."

With that DLL action, you know this is a Win 95 puppy. (The Crustacean profusely apologizes to the nonWinners in his audience.) You should also know that it works. Quite well, as a matter of fact. You can test drive this meta-level Web-searching tool by surfing to the SearchPad site. SearchPad, Your Watery Wayfarer has discovered, is an intelligent Web "find engine" that searches, organizes, and delivers online information in a format that's easy to understand. The program supports basic and advanced Boolean queries. It also allows the user to specify "phrase neighborhoods" in terms of words, sentences, and paragraphs. SearchPad also goes beyond any other search tool by offering easily definable "accept" and "reject" rules.

SearchPad International Product Review in PC World Online (Tipworld)
On 18th February 1998
By Don Crabb

***** Please Note :**
The above mentioned Satyam Spark Solutions has merged into its parent company Satyam Computer Services Ltd, and no longer exists.

salesinfo@bet.satyam.com.
SearchPad is a trademark of Satyam Computer Services Ltd
Copyright © 1997 Satyam Computer Services Ltd

SearchPad Streamlines Research

If you do a lot of research on the Internet, you know the difficulty in culling through a large number of results to a search engine request, SearchPad a new tool I learned about at Comdex, might be just what you need to streamline your searches.

You can use this utility as your agent to search the Internet. What you are doing is training an agent to go out onto the Internet for you and bring back information on subjects you research on a regular basis.

You use the SearchPad to query from the Internet on a one-time or ongoing bases.When you launch the application, you can see the results of scheduled query and searches. SearchPad also tells you the status of the downloads of your search results. SearchPad takes up to 10 meg as its standard to store and categorize the URLs it finds in response to detailed search parameters.

From the query menu you can specify the key words, phrases and Boolean operators to search from your choice of up to nine search engines at a time. You can narrow the search process before the agent goes online to find the information. You can be very specific in your choices. When the results are returned, URLs are classified based upon which criteria were used to choose them.

What SearchPad does before returning its results is much like using the refine feature in AltaVista or the more like this button in Excite! to narrow down a large number of choices in response to a query.

You can store queries and use them more than once. You can also model laterday queries after queries you have used in the past and give SearchPad a list of URLs to monitor for changes. Once you have set it up, the SearchPad can even be made to run automatically at off-peak hours.

As you go through results, you can double click to go to the sites listed, you can also add your own classifications to sites. Once you establish a pattern of classification, SearchPad will apply it to similar document matches.

Here is the really cool part- it remembers for the next search and acts on what it has learned. If you want to use the Web more effectively for research, monitor key sites for changes or simply save time in searching, check out SearchPad.

SearchPad is distributed by a Scottsdale company, Technocratix, whose Web site, www.technocratix.com *** has links to e-mail sales addresses, but no product information on SearchPad. Send an e-mail to sales@technocratix.com for product information. You can learn about another company product, Web Etc. at the site, though. It enables up to 5 users to share an Internet connection, modem and phone line while surfing.

Computer Buyer (February 1998)

*** **Please Note** - SearchPad is no longer distributed by Technocratix Inc. Please send mail to salesinfo@bet.satyam.com, or visit the website www.searchpad.com, for purchase.

salesinfo@bet.satyam.com.
SearchPad is a trademark of Satyam Computer Services Ltd
Copyright © 1997 Satyam Computer Services Ltd

Finding it on the Internet

I describe the Internet this way: It's like an enormous library, one that contains virtually anything you'd ever want to know. But the librarians are a bit demented. They refuse to set up a card catalog and, when new information comes in, they tear the pages from the books, throw away the covers and indexes, shred the paper, and then hold a "ticker-tape" parade with what's left.

In short, finding what you want isn't always easy.

For websites, there are several search facilities AltaVista, Yahoo, and others. The search engines don't all contain the same information, so a dedicated searcher might have to use several. And searching Usenet news groups is really a challenge.

A couple of programs aim to solve these problems.

SearchPad scours the Web

For the past couple of weeks, I've been working with SearchPad, a program from a software developer in India. The original version of the program had some intermittent problems caused by an incompatibility with Microsoft's Internet Explorer 4.

"SearchPad's capabilities impressed me even before that problem was resolved."

How it works

The program helps you fill out a search request. You then tell the program which of about a dozen search engines you want to use - any combination. SearchPad then conducts the search and returns a list of website addresses.

The program has a built-in browser, so you can review the results without having to leave SearchPad. That's

when it gets interesting. You can provide feedback to the program about a particular result - rating the page from highly relevant to highly irrelevant. SearchPad will then re-order its results based on your feedback.

You can have up to 5 simultaneous searches.

"SearchPad is likely to become the program I use when I need to find obscure bits of information."

"In just 2 weeks, SearchPad has turned up in less than 15 minutes information that probably would have taken me several times that to find manually."

---By Bill Blinn

SearchPad Review in Newsradio Technology Corner on WTVN Radio, Columbus, Ohio.
25th January 1998

---

salesinfo@bet.satyam.com.
SearchPad is a trademark of Satyam Computer Services Ltd
Copyright © 1997 Satyam Computer Services Ltd

SearchPad Software Aids Internet Search

The first bit of handling the hay and finding that needle of needed information in the Internet Haystack just got a bit more feasible with an interesting meta-search engine from India.

Entitled **SearchPad**, the software was launched by Satyam Spark Solutions of Bangalore, India. And while that may seem like an unusual home address for Internet Software - its not quite on the beaten track for Silicon Valley - **SearchPad** is an elegant and easy way to eliminate some of the frustration of Internet searches.

First for those, who have not worn their patience to a frazzle trying to squeeze a nugget of information from the Internet - a brief explanation.

Information on the Internet is not catalogued as neatly as it is in Mary Hawkins Memorial Library. Whatever you want is likely to be out there, somewhere, but finding it is like going on a treasure hunt with no map.

Enter search engines. These are giant databases with record thumbnail descriptions of Internet sites along with the web page addresses known as URLs. Users can log onto these databases, type in a word or phrase and the search engine will quickly scan the database and come up with any matching words or phrases.(My personal favorite- there are a number available - is Altavista which is kindly maintained by the folks from Digital Computers, but I digress.)

Its free, its easy to use and it sounds great but there are a few bugs in the bytes.
First matching is not an exact science and human minds don't always think the same way - ever try to use a filing system developed by someone else? - so searches tend to be heavy on dross and light on data.

There is nothing quite like scrolling down a list of 500 matches, trying to figure out the best options from sparse descriptions and spending hours checking out site after unproductive site to make the searcher wish the microchip had never been invented.

For example, the word apple could produce everything from information on growing the fruit to descriptions on New York. Search Engines don't discriminate. If the word matches, the URL turns up on the often lengthy list to be checked out.

In addition, the same WebPages are often listed over and over again due to repeated matching words, further clogging the search.

Enter **SearchPad**, software designed to help Internet surfers zero in on the information they seek. Easy to install and use - a wizard option guides novice users through their first few searches - **SearchPad** allows a variety of Internet databases to be scanned simultaneously and the results combined into a single report.

The software automatically eliminates duplicate listings of the same site and and condenses the listing into an intelligent summary, often including

"Best Overall Radio Program" - National Computer Press Awards - 1997

The other day I wanted to look up something on-line.. It was a simple thing so I anticipated no problems. I was right . I had no problems. What I did get was some 20,000 hits on the web and about 700 in the USENET newsgroups.

What we need, I cried, was a better way.

Well, there is a better way... lots of them. Two of the easiest to use are NewsMonger for Usenet newsgroups and SearchPad for the World Wide Web and for AltaVista's Newsgroup index.

For searching the World Wide Wait --- (uh) Web --- I tried out a different program. SearchPad by Satyam Spark Solutions *** searches (using multiple search engines, simultaneously), gathers, classifies and presents in an organized and usable way the online information you want. It is very powerful and not as confusing as it might seem to be. Again, it uses its own intuitive syntax for the search, regardless of which search engine it is accessing.

Your search for information can be customized to suit your preferences and tastes. For every subject of your interest, you define a topic , and for documents related to this topic, you probe Search Engine databases by issuing queries. Once the documents are downloaded, you can point out those which are relevant/irrelevant (in short, you classify them) based on the presence or absence of keyphrases in the document. These classifications are then analyzed and stored in the topic knowledge base. Further documents related to this topic are automatically classified using the feedback you provided earlier. In essence, SearchPad builds an expert system which constantly improves your chances of getting just the information you need. The user interface is set up to guide you through each of the steps necessary to set up a query. But more experienced users can go right to rules pages to customize their searches.

While SearchPad can be used to search the information carried in USENET newsgroups, it is limited to those in the AltaVista index so a product like Newsmonger would be better suited if you want to search private or local news.

I tested Version 1.1 of SearchPad and had a conflict in some DLL's on my machine; but rebooting seemed to cure it. Two other times my system crashed, but I couldn't reproduce the error, so it probably wasn't due to the software I was testing but rather the same DLL problem.

(Hank, Do you think Microsoft will ever get it right with DLL's or will we have to wait for NT 5.0??)

With the mass of data on the web a product such as SearchPad is really essential if you do any significant amount of research. I particularly like the "feedback" feature which let me read through the results of the first search and categorize what was returned. Then refine the search, add some

the phrase that led to that URL being tagged in the search.

Therefore, without taking the time to download the web page, the searcher can determine whether the matched phrase refers to apples(the fruit) or the "Big Apple"(New York.)

Multiple scanning of databases is just the start. **SearchPad** allows the user to fine-tune their database scans with basic and advanced Boolean queries - such as asking for sites which include "apple" and "tree" or "leaves" and not "New York".

Another option gives the user the opportunity to define that chosen words should be "near" one another on the website - some approximate sites shown up in searches because they have the right combination of words but the words are not close enough to convey the appropriate meaning.

Users can schedule a list of searches, give certain search priority and create data "books" which record search results for specific interests.

But the most exciting feature of **SearchPad** is that it "learns" while it is being used. Users are invited to rate the suitability of each site listed from the search. The program will then use the rating feedback to better fine-tune similar searches in the future.

In North America, **SearchPad** is being marketed by Technocratix Inc. of Phoenix, Arizona.

DRIFTWOOD - Wednesday, 14th January 1998
By **Valorie Lennox** - BITS ON BYTES COLUMN

***** Please Note :**
1. SearchPad is no longer distributed by Technocratix Inc. Please send mail to salesinfo@bet.satyam.com, or visit the website www.searchpad.com, for purchase.
2. The above mentioned Satyam Spark Solutions has merged into its parent company Satyam Computer Services Ltd, and no longer exists.

salesinfo@bet.satyam.com.
SearchPad is a trademark of Satyam Computer Services Ltd
Copyright © 1997 Satyam Computer Services Ltd

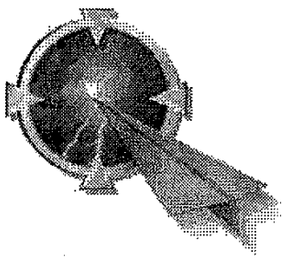

- What's New
- Test Drive Ver 1.61
- Virtual Library
- Awards

Your Genie on the Net

The first in a family of products from Satyam Computer Services Ltd, **SearchPad** searches, gathers, organizes, analyzes and presents online information in an easy to understand format. SearchPad is the first tool of its kind to support interactive user feedback to filter and deliver organized information. With SearchPad you gain more control over the information explosion occurring on the Internet.

- For SearchPad Lite Customers

You are visitor no: 57976

Contact:
salesinfo@bet.satyam.com
SearchPad is a trademark of Satyam Computer Services Ltd
Copyright © 1997 Satyam Computer Services Ltd

Virtual Library

Welcome to Virtual Library @ searchpad.com !! This is a knowledge-base on various topics, created using SearchPad !!
Make use of other's knowledge, to classify information on a subject.

Click on the link below to download the topic file that interests you. The topics are created for your use, based on key words entered by us as feedback. (Check SearchPad documentation to know more about feedback.)

Import the downloaded file into your copy of SearchPad. Then submit queries, associating with the Topic, and see your search results being classified as they come ! Further, you could edit, delete, and rollback the feedback on the Topic, and send it to others who could get your view of the Topic as seen on the Web.

To use the Topic described,

1. Click on the link to download the respective Topic file. Save onto your disk. Note that the filename is 3 characters long, and the file extension reads as .tpc
2. Launch SearchPad, and click on Import under Topic menu
3. Set the path to the downloaded Topic file
4. Give a name to the Topic, as you desire
5. Click OK
6. The Topic has been imported into the application, and can be seen in the Table of Contents at the left
7. Submit queries now, on the subject, associating them with the Topic. As you can see, the results get classified into different folders, as and when they are cached !

Topic : TRAVEL

With Description and Sample queries

Topic : HEALTH

With Description and Sample queries

Please note

1. The feedbacks within the Topic, are personalized, or they represent the opinion of a particular user, and it is possible that you may not agree with some of the feedbacks. However, the main purpose of Topics is to show how SearchPad can be used to classify information easily, as well as to build knowledge bases that can be reused by anybody !!
2. Also, the set of feedbacks is not comprehensive in any way, and you could fine-tune the topic by adding more feedbacks into it.
3. *We'd also like to add that the* Topics selected are a sample lot, and the content / matter of the documents are not in anyway endorsed by us, for whatever reasons!

For more, send us a mail and we shall be happy to answer all your queries !!
Still better, you could begin using SearchPad rightaway !!

---

salesinfo@bet.satyam.com.
SearchPad is a trademark of Satyam Computer Services Ltd
Copyright © 1997 Satyam Computer Services Ltd

Download Topic

Topic– General Health And Fitness

The following issues are covered under general health and fitness.

1. Weight Watching, Diet and Nutrition
   Generally, the most important concern among of people of all ages. Experts believe that, as much as 20% of all material available on health, either in print or online, refers to weight watching, and the right constitution of food. Not just from a cosmetic, but also from a health point of view.
2. Exercise
   The Topic covers the merits of exercise in maintaining health, and how Exercise can be done at home without the aid of special equipment. Merits of exercise during pregnancy etc.
3. General information on homeopathy and its merits.
4. Oriental medicine / Alternative medicine / Holistic medicine, in its different forms
5. Dental care, in brief
6. Mental or psychological health

Following are **sample queries** that a user might submit on health

1. Diet and "weight watch" Nutrition AND "Weight watching"
2. Exercise AND Health AND Monitor
3. Allopathy AND Homeopathy AND Comparison
4. Yoga Reiki Acupressure Acupuncture "Transcadental Meditation"
5. "Children's Health" children AND health, Child AND health

6. Dentistry, "Dental care", "teeth care"
7. "Mental Health" "Psychological health"

Classification :

1. Highly Relevant : if the document emphasizes any detail like – key nutritional elements of diet; is endorsing expert's opinion; contains links to resources on health; is talking of child health guides or safety norms for children, etc- all such issues that are of serious concern.
2. Relevant : if the document contains relevant material on health, but the issues discussed are not serious, and when there is no specific emphasis on any detail.
3. Average : When the information is of average importance, like veterinary health care.
4. Irrelevant & Highly Irrelevant : when the document has nothing to do with health. Note that such documents come up in the results, because Search Engines index and documents that contain one, or all of the words in a query strings, inspite of the user having entered a phrase or a Boolean expression as the query string.

---

salesinfo@bet.satyam.com.
SearchPad is a trademark of Satyam Computer Services Ltd
Copyright © 1997 Satyam Computer Services Ltd

Download

SearchPad 1.61 Free Product Download

SearchPad may be used for evaluation purposes only, for a period of 30 days from the date of installation.

Please note that SearchPad 1.61 requires **Internet Explorer 4.01 SP1** or higher to be installed in your system.
Click here to download the same.

Please note, for users on Windows NT platform, you need to have **Windows NT 4.0 SP5** or higher, to be installed in your system.
Click here to download the same.

SearchPad 1.61 Product Demo (needs Shockwave)

To view the SearchPad Product Demo, you will need the popular Shockwave plug-in from Macromedia. If you don't have it already, you can download this free plug-in from the Macromedia website at http://www.macromedia.com/shockwave/download/

The shockwave plug-in is about 873 KB in size. After the shockwave plug-in is installed in your browser's plugins directory, the SearchPad Product Demos may be downloaded which automatically play in your browser window.

Please provide the following information:

Download

- ☐ SearchPad 1.61 (**3.65 MB**)
- ☐ SearchPad 1.61 Product Demo - DCR file (**780 KB**)

We request you to kindly submit genuine details in the form below. We would like to get back to you often, with certain notices and information. This information would not be relevant to all those who visit our site, and hence would not appear on our website.

Satyam Computer Services Ltd assures that the details submitted by you, would be kept strictly private and confidential.

Name: _____

Country: _____

Phone: _____

E-mail: _____

How did you come to know about SearchPad ?

- ☐ Used before
- ☐ Reviews in the paper
- ☐ Comdex Shows
- ☐ While browsing the net
- ☐ Other (Please specify)

_____

[Submit Form] [Reset Form]

---

salesinfo@bet.satyam.com.
SearchPad is a trademark of Satyam Computer Services Ltd
Copyright © 1997 Satyam Computer Services Ltd

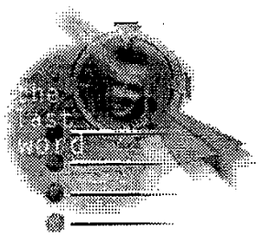

what others say

Indianapolis Computer Society
(June 1998 Issue)

"....with the use of SearchPad, but there is a noticeable improvement in performance which further improves with use and familiarity with the product."..... **Indianapolis Computer Society Magazine**

Full Review

TipWorld-PCWorld Online
(12th June 1998)

"It does offer some smarter ways to find things. Like going to 31 of those engines [at the same] time. And letting users rate what it finds, so it finds more cache and less trash with every haul."..... **PC World Online (TipWorld)**

Full Review

Government Computer News
(April 20, 1998)

" SearchPad is a definite step up in searching for data on the Internet. It figures out what you want based on feedback and eliminates what you don't want..... **William M. Frazier & Susan Menke in GOVERNMENT COMPUTER NEWS,**

Full Review

The Computer Talk Magazine
(April 1998 Issue)

"It further utilizes the context in which these words occur, which results in a search that is more focussed that what was possible before."..... **Tony Curro in The Computer Talk Magazine April 1998 Issue**

Full Review

DER STANDARD
(16, April 1998)

"SearchPad " tries in its own way to bring order into the chaos that exists during search operations - and succeeds by and large.
SearchPad is effective and fast and comes to the fore with its universal programmability.
..Letter from a reader in **DER STANDARD**

Full Review

The Kleper Report on Digital Publishing
(Issue 3.2 March/April 1998)

"Each search is cumulative, with SearchPad becoming smarter and more efficient, and producing more desirable hits, and fewer undesirable ones."..... **The Kleper Report on Digital Publishing**

Full Review

HAL PC
(April 1998)

"SearchPad finds instead of searching. SearchPad works unexpectedly quickly and is exceptionally powerful. Expect to see this technology expand.
SearchPad is the wave of the future."..... Todd Rosen - **HAL PC**

Full Review

The PC Update (Australia)
(March 1998 Issue)

"This is very neat utility which will become ever more useful as you continue to use it, it becomes smarter and more effective with repeated use."..... Bob Burt **The PC Update (Australia)**

Full Review

The Computer Answer Guy
(Radio Show, 21st February 1998)

"SearchPad does something else that's amazing- It learns!!! Cool!!
I'll say it again: IT LEARNS. The more you use SearchPad, the better it gets at finding what YOU want it to find."..... Jeff Yablon - **The Computer Answer Guy New Jersey, USA**

Full Review

TipWorld-PCWorld Online
(18th February 1998)

"When the SearchPad find engine goes calling on all those Web search engines, it helps to know where the doorbell is.....Searching the Web these days isn't so tough, but it can be tedious. That's why Satyam Spark Solutions of Bangalore, India, came up with its SearchPad software. SearchPad also goes beyond any other search tool by offering easily definable "accept" and "reject" rules"..... Don Crabb **- PCWorld Online (TipWorld)**

Full Review

PC WORLD (India)
(February 1998 Issue)

"SearchPad comes with so many features that it's a power searcher's delight. Using SearchPad with all these features, I easily found some very interesting pages which were more difficult to locate with some other metasearchers . And with SearchPad I was able to reduce the effort required in manually inspecting the pages significantly"..... **Sameer Madan in PC WORLD (India),**

Full Review

Computer Buyer

(4) (February 1998)

"Once you establish a pattern of classification, SearchPad will apply it to similar document matches. It remembers for the next search and acts on what it has learned. If you want to use the Web more effectively for research, monitor key sites for changes or simply save time in searching, check out SearchPad !
.....**Computer Buyer**

Full Review

(3) **Newsradio Technology Corner**
(WTVN Radio, 25th January 1998

"In just 2 weeks, SearchPad has turned up in less than 15 minutes information that probably would have taken me several times that to find manually."".....Bill Blinn - **Newsradio Technology Corner** on WTVN Radio, Columbus, Ohio.

Full Review

(2) **Driftwood**
(14th January 1998)

"SearchPad allows a variety of Internet databases to be scanned simultaneously and the results combined into a single report."
"But the most exciting feature of SearchPad is that it **"learns"** while it is being used. Users are invited to rate the suitability of each site listed from the search. The program will then use the rating feedback to better fine-tune similar searches in the future."".....By Valorie Lennox - BITS ON BYTES COLUMN, **DRIFTWOOD**

Full Review

(1) **The Personal Computer Show**
(WBAI-FM/99.5, 7th January 1998)

With the mass of data on the web a product such as SearchPad is really essential if you do any significant amount of research. I

particularly like the "feedback" feature which let me read through the results of the first search and categorize what was returned. Then refine the search, add some additional search engines and have SearchPad categorize everything based on what it learned from me ."……Joe King - **The Personal Computer Show** , New York.

Full Review

Chip Magazine (India)
(July 1998 Issue)

"SearchPad 1.1 is a search tool that promises to make things easier for Net surfers. The toll is designed to allow simultaneous searches on multiple engines, besides filtration of queries and classification of documents. Installation is very easy, and the software too is smooth and polished in looks"……**Chip Magazine (India)**

Full Review

---

salesinfo@bet.satyam.com.
SearchPad is a trademark of Satyam Computer Services Ltd
Copyright © 1997 Satyam Computer Services Ltd