Ex. GOOG 1020

United States Patent [19]

Lloyd et al.

[11] **4,131,919**

[45] **Dec. 26, 1978**

[54] **ELECTRONIC STILL CAMERA**

[75] Inventors: **Gareth A. Lloyd; Steven J. Sasson,** both of Rochester, N.Y.

[73] Assignee: **Eastman Kodak Company,** Rochester, N.Y.

[21] Appl. No.: **798,956**

[22] Filed: **May 20, 1977**

[51] **Int. Cl.**[2] **H04N 5/79**

[52] **U.S. Cl.** **360/9;** 360/35; 358/127; 358/134; 358/213

[58] **Field of Search** ..... 360/9, 10, 8, 35, 33; 179/2 TV; 358/127, 134, 213, 85, 133, 78

[56] **References Cited**

U.S. PATENT DOCUMENTS

3,858,232	12/1974	Boyle	357/24
3,911,467	10/1975	Levine	358/213
3,962,725	6/1976	Lemke	360/37
4,016,361	4/1977	Pandey	360/9
4,057,830	11/1977	Adcock	360/35

Primary Examiner—Bernard Konick
Assistant Examiner—Alan Faber
Attorney, Agent, or Firm—D. P. Monteith

[57] **ABSTRACT**

Electronic imaging apparatus, preferably an electronic still camera, employs an inexpensive information-recording medium such as audio-grade magnetic tape for "capturing" scene images. The camera includes a charge coupled device comprised of an array of photosensitive elements which form a charge pattern corresponding to an optical image projected onto the elements during an exposure interval. A charge transfer circuit converts the charge pattern into a high frequency pulsed electrical signal immediately following the exposure interval to remove the charge from the device in a short period of time to maintain unwanted "dark current" at a low level. Each pulse represents the image-forming light projected onto a particular photosensitive element. A high speed analog-to-digital converter converts these pulses to multi-bit digital words in real time. A digital buffer memory temporarily stores these words, then retransmits them at a rate that is compatible for recording on the audio-grade tape. The image can be displayed on a conventional television receiver by reading the recorded words from the tape and converting them to a format compatible with the signal-receiving circuitry of the television.

8 Claims, 4 Drawing Figures

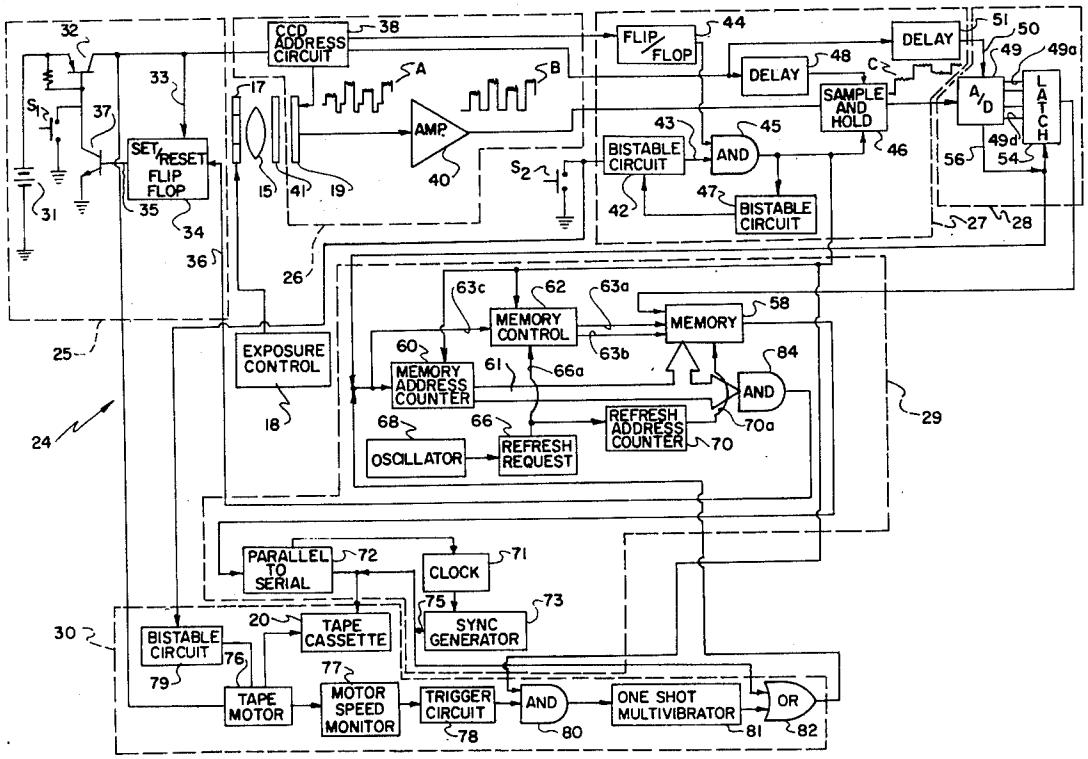

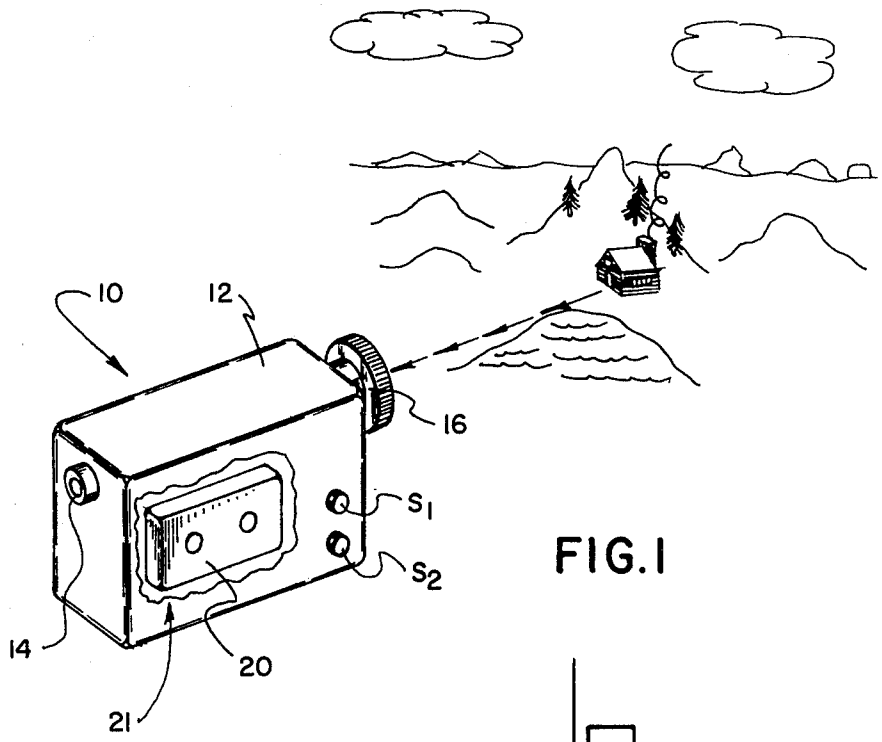

FIG. 1

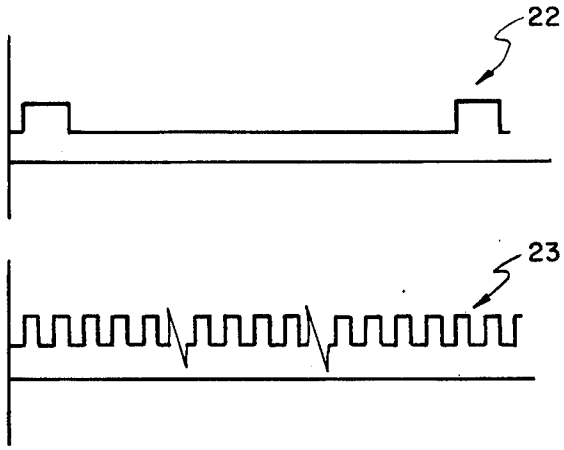

FIG. 3

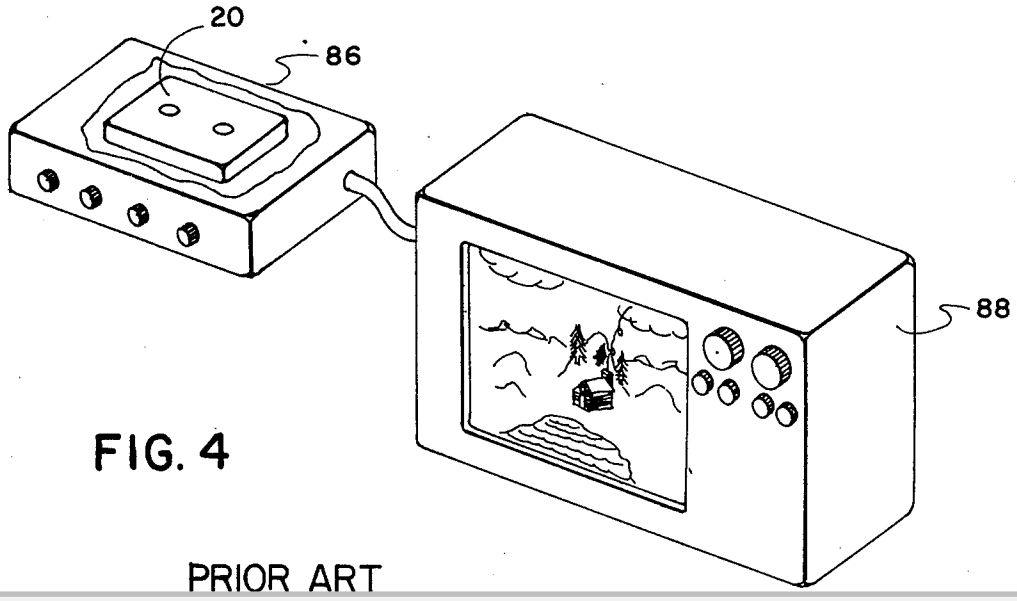

FIG. 4

PRIOR ART

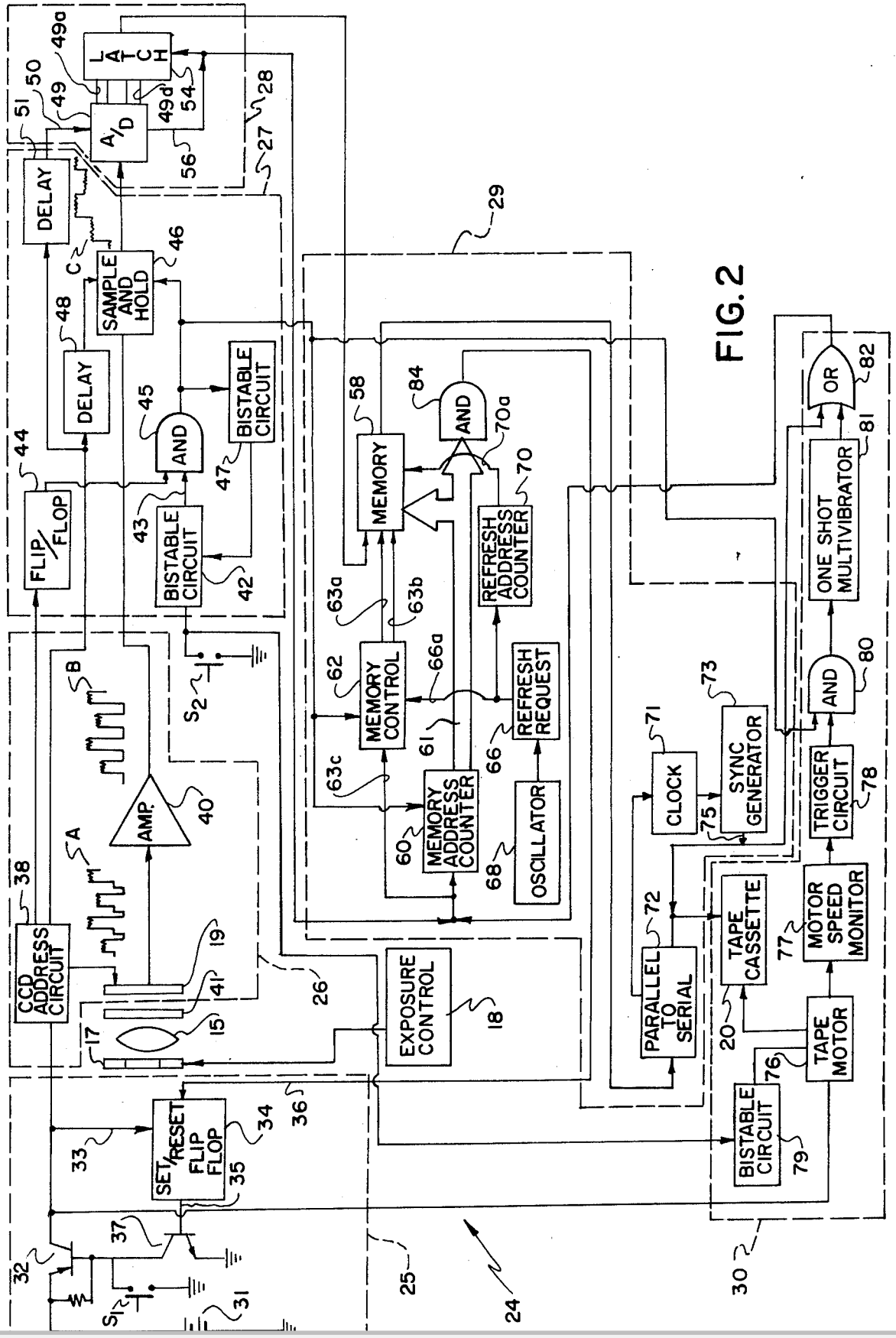

FIG. 2

ELECTRONIC STILL CAMERA

BACKGROUND OF THE INVENTION

Field of the Invention

This invention relates in general to electronic imaging apparatus and in particular, to an electronic still camera that employs a non-volatile reuseable storage medium for recording scene images.

Description of the Prior Art

Conventional cameras employ a shutter for exposing for a limited duration photographic film located at a film exposure plane. Film processing solutions are required to produce a visible image of trhe photographed scene. As is well known, processed photographic film may not be reused.

Recently, considerable effort has been given to the development of solid-state elements for imaging purposes. Such elements offer an advantage over photographic film in that, theoretically, they can be reused any number of times for imaging.

A solid-state imaging element of the type known as a charge transfer device can include a semiconductive substrate doped with majority carriers and covered with a thin insulating film upon which is located an array of electrically conductive electrodes. A depletion region or potential well is formed within the semiconductor under electrodes biased by a voltage of the proper polarity. The use of a charge transfer device involves the basic concept of forming a charge pattern consisting of packets of minority carriers in the potential wells. In the course of an optical imaging process, photons incident upon the semiconductor generate minority carriers within these potential wells in proportion to the amount of light impinging upon the semiconductor in the near vicinity of each well. These packets can be transferred through the semiconductor by sequentially biasing the electrodes. The potential wells effectively "move" through the semiconductor sweeping the minority carriers along within the wells. At an appropriate location these packets may be detected, for example, by removing them sequentially from the semiconductor by means of a reverse-biased diode coupled to transfer electrodes. An arrangement for read-out of information from a charge transfer device is disclosed in *IEEE Transactions On Electron Devices,* Vol. ED-20, No. 6, June 1973, in an article entitled "Interlacing In Charge Coupled Imaging Devices", by Carlo H. Sequin.

As with conventional photographic film, to obtain a scene image having a proper contrast, the imaging element must not be overexposed, or, in other words, the potential wells must not be saturated with minority carriers during the exposure interval. However, even in the absence of illumination, the regions constituting the potential wells tend to saturate with the passage of time by means of the thermal generation of minority carriers. Carriers generated in this manner constitute an unwanted signal commonly known as a "dark current". It is important that this signal be only a small fraction of the signal produced by incident illumination, particularly if the dark current is non-uniform over the imaging area.

U.K. Pat. No. 1,440,792, entitled ELECTRONIC STILL PICTURE CAMERA, and U.S. Pat. No. 4,057,830 which corresponds thereto and is entitled Electronic Photography System, disclose a camera for electronically recording "stop-action" or still pictures

that includes a charge transfer device, and recording apparatus that employs an inexpensive information-recording medium which is non-volatile and reuseable, such as a magnetic tape, disc or drum. The camera also includes a conventional shutter mechanism for exposing the transfer device to reflected scene light for a duration related to scene brightness. The rate of read-out of the signals produced by the charge transfer device is synchronized with the speed of the recording apparatus since the transfer device output is connected directly to the input of the recording apparatus. These signals are read-out at a relatively slow speed to record a scene image on the storage medium that is employed. It takes approximately one second to output scene information from the charge transfer device. For "stop-action" photography an exposure interval of approximately 1/20 second or less is needed. Accordingly, the charge transfer device is used both for imaging and until scene information is read-out, for data storage.

That camera suffers from the disadvantage that the charge pattern related to the incident illumination will be adversely affected by thermally generated minority carriers. Not only would it be expected that significant dark current would be produced with a 1-second storage interval, but it could also be expected that the "dark current" would be nonuniform. This is because the storage interval for any potential well, and accordingly the number of thermally generated minority carriers in that well, is dependent upon whether or not that potential well is among the first or the last to sweep through the semiconductor to an output transfer electrode. Furthermore, saturation of some potential wells may occur if too many minority carriers are thermally generated. Excess minority carriers would spread to adjacent potential wells to be added to minority carriers in non-saturated potential wells.

SUMMARY OF THE INVENTION

An object of the present invention is to provide improved electronic imaging apparatus.

In accordance with the above object, the present invention is addressed to an electronic still camera which includes a solid-state imaging device that produces a charge pattern corresponding to an optical image projected onto an imaging surface during an exposure interval. Charge transfer means converts such charge pattern into a high frequency pulsed electrical signal within a relatively brief time after termination of the exposure interval. Electrical signal transforming means receives data corresponding to this electrical signal in real time, then retransmits such data at a substantially slower rate to recording apparatus. This slower data rate permits recording of signals corresponding to the optical image on an inexpensive recording medium such as audiograde magnetic tape.

The invention, and its objects and advantages, will become more apparent in the detailed description of a preferred embodiment presented below.

BRIEF DESCRIPTION OF THE DRAWINGS

In the detailed description of a preferred embodiment of the invention presented below, reference is made to the accompanying drawings in which:

FIG. 1 pictorially represents an electronic still camera in accordance with the teachings of the present invention;

DOCKET ALARM

Explore Litigation Insights

Docket Alarm provides insights to develop a more informed litigation strategy and the peace of mind of knowing you're on top of things.

Real-Time Litigation Alerts

Keep your litigation team up-to-date with **real-time alerts** and advanced team management tools built for the enterprise, all while greatly reducing PACER spend.

Our comprehensive service means we can handle Federal, State, and Administrative courts across the country.

Advanced Docket Research

With over 230 million records, Docket Alarm's cloud-native docket research platform finds what other services can't. Coverage includes Federal, State, plus PTAB, TTAB, ITC and NLRB decisions, all in one place.

Identify arguments that have been successful in the past with full text, pinpoint searching. Link to case law cited within any court document via Fastcase.

Analytics At Your Fingertips

Learn what happened the last time a particular judge, opposing counsel or company faced cases similar to yours.

Advanced out-of-the-box PTAB and TTAB analytics are always at your fingertips.

API

Docket Alarm offers a powerful API (application programming interface) to developers that want to integrate case filings into their apps.

LAW FIRMS

Build custom dashboards for your attorneys and clients with live data direct from the court.

Automate many repetitive legal tasks like conflict checks, document management, and marketing.

FINANCIAL INSTITUTIONS

Litigation and bankruptcy checks for companies and debtors.

E-DISCOVERY AND LEGAL VENDORS

Sync your system to PACER to automate legal marketing.