Cisco Systems et. al., Petitioners v. Crossroads Systems Patent Owner IPR2014-01226, -01463, -01544

CROSSROADS EXHIBIT 2049
Cisco Systems et al v Crossroads Systems, Inc.
IPR2014-01226, -01463, -01544

Overview of Presentation

- The invention includes mapping and access controls between particular hosts and storage space
- Petitioners' combination uses the Host LUN Mapping of the CRD As-Is, with no capability to map to hosts
  - The CRD and its Host LUN Mapping are only capable of allocating storage to channels
  - Adding Fibre Channel does not change any of these capabilities

- In their Reply, Petitioners state that one of skill in the art would add new capabilities to the Host LUN Mapping to map to hosts
  - New combination - not a basis upon which trial was instituted
  - No evidentiary support - Hospodor says no changes for combination
  - Petitioners' position in reply is based on an erroneous foundation

- Petitioners assert in their Reply that one host per channel is a per-host system rather than a channel based system – the evidence shows otherwise
  - New combination – not a basis upon which trial was instituted

The Invention Includes Mapping and Access Controls Between Particular Hosts and Storage Space

Patent Owner Invented the Claimed Access Controls Which Use a Host to Storage Map

The invention requires the capability to map different storage to different hosts on the same transport medium (i.e., a common communications link):

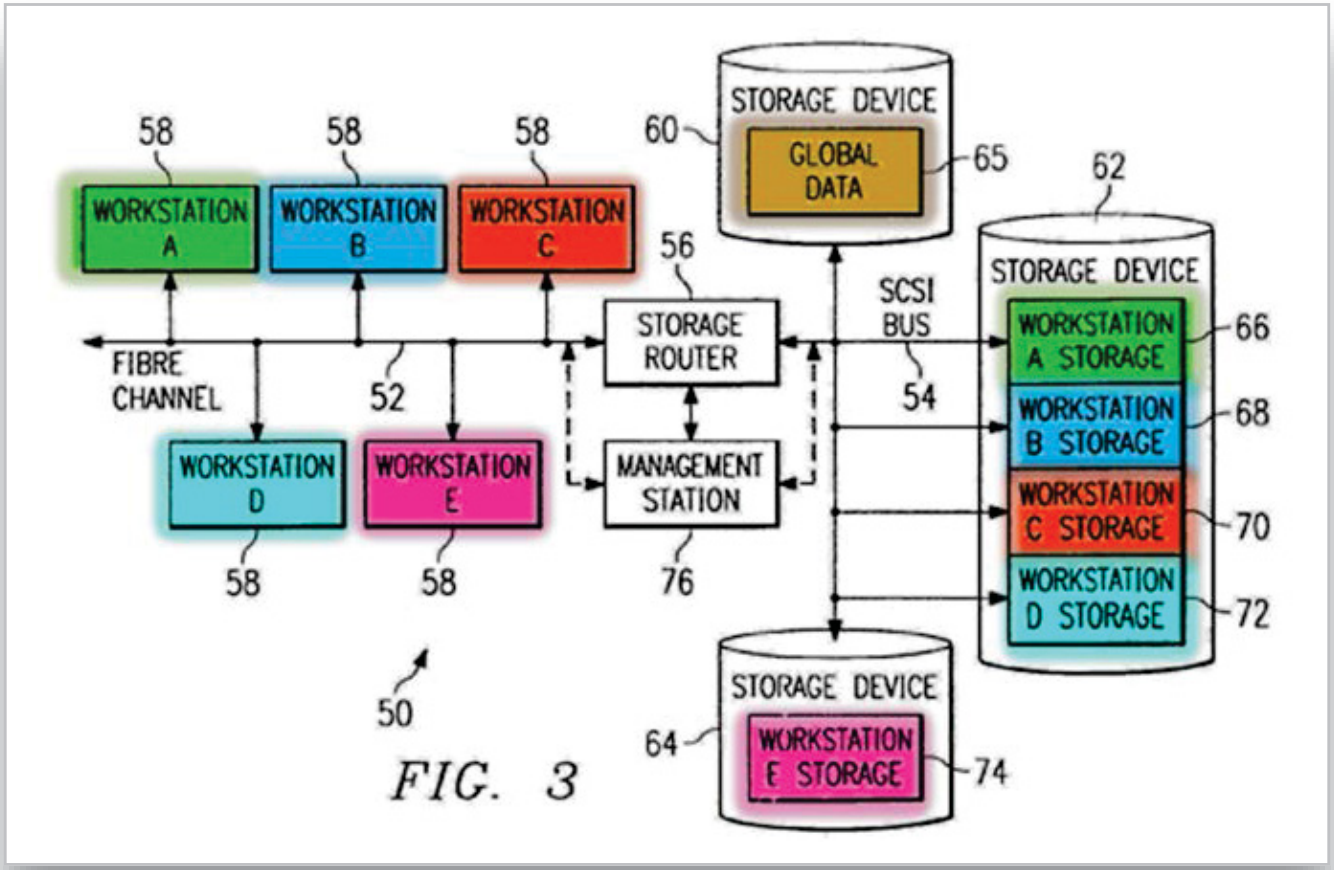

FIG. 3

cited in 1226 POR at 8

Petitioners' Combination Uses the CRD's Host LUN Mapping As-Is, with No Capability to Map to Hosts

Petitioners' Original Combination

Petitioners' Original Combination replaced the multiple SCSI I/O host modules in the CRD-5500 with a single Fibre Channel I/O host module, so that all hosts would be on a single transport medium:

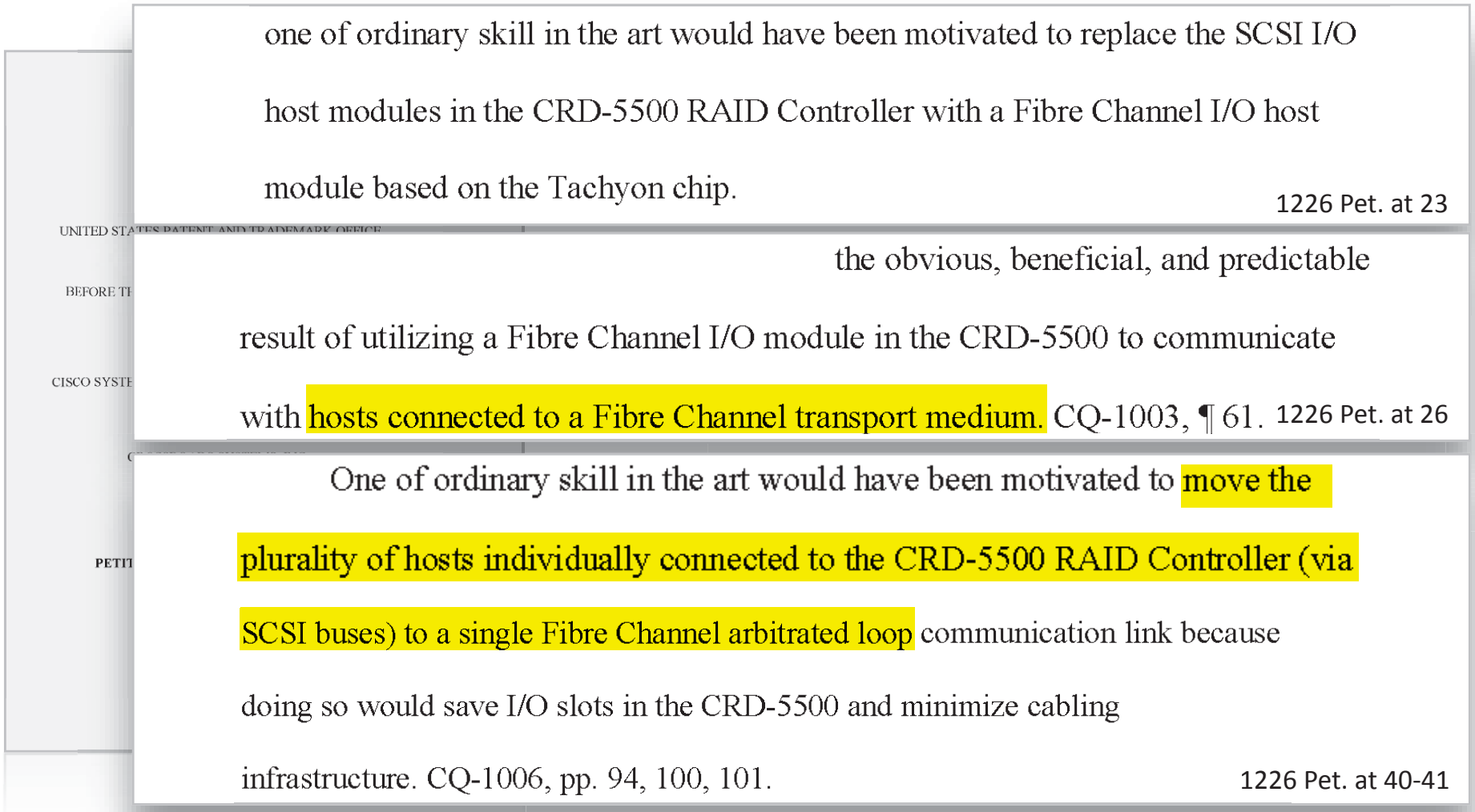

one of ordinary skill in the art would have been motivated to replace the SCSI I/O host modules in the CRD-5500 RAID Controller with a Fibre Channel I/O host module based on the Tachyon chip.

1226 Pet. at 23

UNITED STATES PATENT AND TRADEMARK OFFICE

BEFORE TH

CISCO SYSTE

the obvious, beneficial, and predictable result of utilizing a Fibre Channel I/O module in the CRD-5500 to communicate with hosts connected to a Fibre Channel transport medium. CQ-1003, ¶ 61.

1226 Pet. at 26

PETIT

One of ordinary skill in the art would have been motivated to move the plurality of hosts individually connected to the CRD-5500 RAID Controller (via SCSI buses) to a single Fibre Channel arbitrated loop communication link because doing so would save I/O slots in the CRD-5500 and minimize cabling infrastructure. CQ-1006, pp. 94, 100, 101.

1226 Pet. at 40-41

6 of 101

cited in 1226 POR 33-35,44-45

Petitioners' Original Combination from Petition

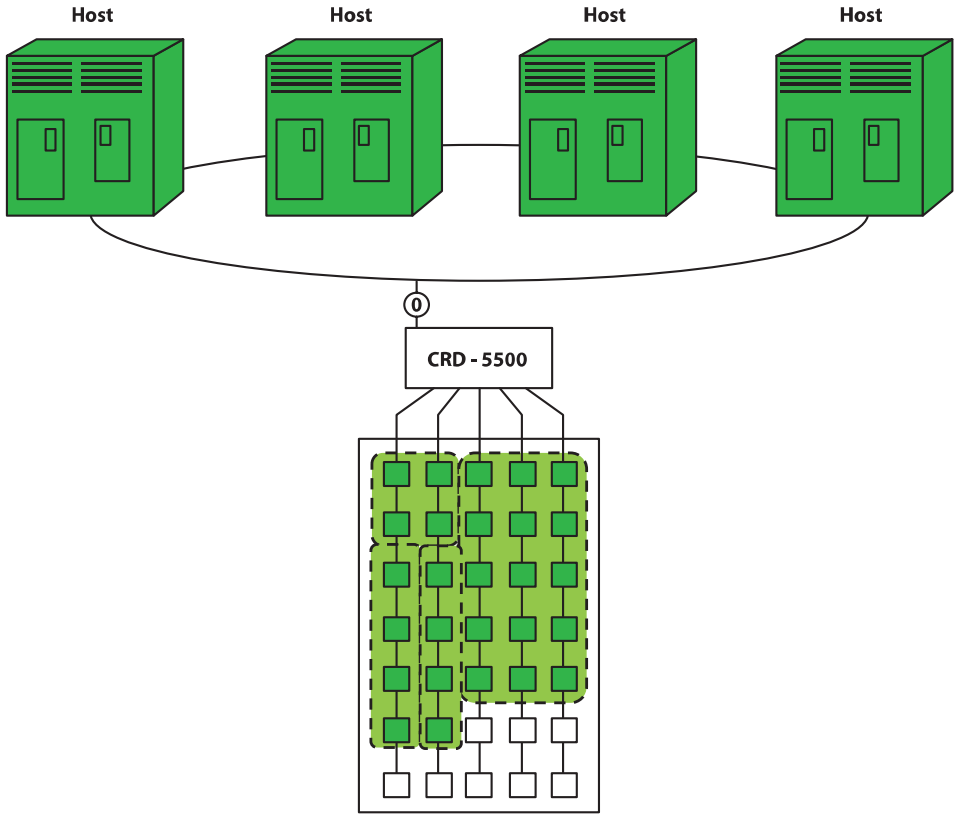

1226 Pet. at 29, 41, 50; Ex. 2027 (Levy Decl.) ¶ 89

cited in 1226 POR at 35

Petitioners Relied on the CRD-5500's "Host LUN Mapping" in Unchanged Form to Meet the Map Limitation

The CRD-5500 Manual discloses this limitation because it teaches that the Monitor Utility in the executable firmware of the CRD-5500 RAID controller provides a "Host LUN Mapping feature" . . . .

Thus, the CRD-5500 RAID controller's Host LUN Mapping feature that maps between hosts and storage devices by assigning redundancy groups to particular hosts, as taught by the CRD-5500 Manual, discloses "the supervisor unit operable to map between devices connected to the first transport medium and the storage devices," as recited in the claim.

1226 Pet. at 31

CISCO SYSTEMS, INC. AND QUANTUM CORPORATION,

Q. What specific changes did you describe in your declaration that you would make to the firmware?

. . .

A. I didn't make any specific changes within the firmware. I merely noted that as part of the integration process, the firmware could be easily updated and could be pushed out to the CRD-5500 once implemented.

Ex. 2028 (Hospodor Depo.) at 208:15-23

8 of 101

cited in 1226 POR at 33

Petitioners Agree that the CRD's "Host LUN Mapping" Utilizes Only Channels to Allocate Storage

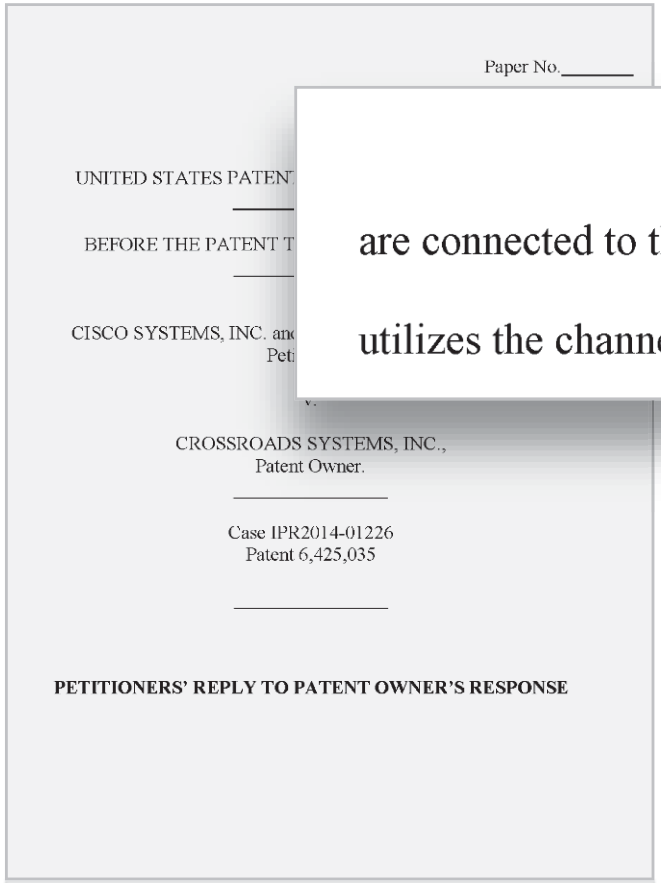

Paper No._____

UNITED STATES PATENT

BEFORE THE PATENT T

CISCO SYSTEMS, INC. an
Peti

v.

CROSSROADS SYSTEMS, INC.,
Patent Owner.

Case IPR2014-01226
Patent 6,425,035

PETITIONERS' REPLY TO PATENT OWNER'S RESPONSE

Patent Owner is correct that hosts are connected to the CRD-5500 via host channels, and that the Host LUN Mapping utilizes the channels to map

1226 Reply at 11,12

The Invention Maps Hosts to Storage, Not Channels to Storage

The claimed invention requires the capability to map different storage to different hosts on the same transport medium (i.e., a common communications link):

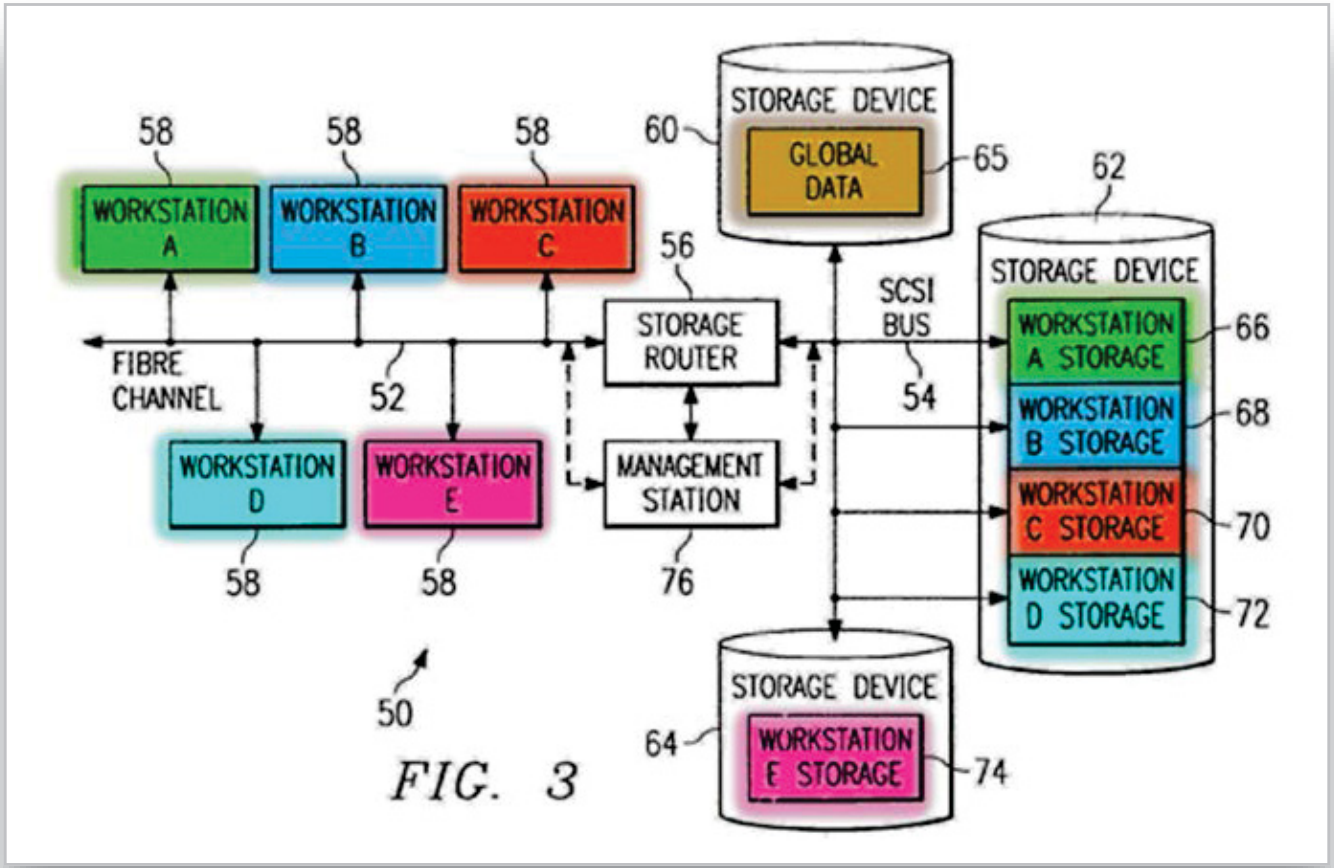

cited in 1226 POR at 8 10

The CRD-5500 Was Incapable of Providing Different Storage Access to Different Hosts on a First Transport Medium

The Host LUN Mapping only allocates storage to channels, rendering the CRD-5500 incapable of providing different storage access to different hosts on one channel:

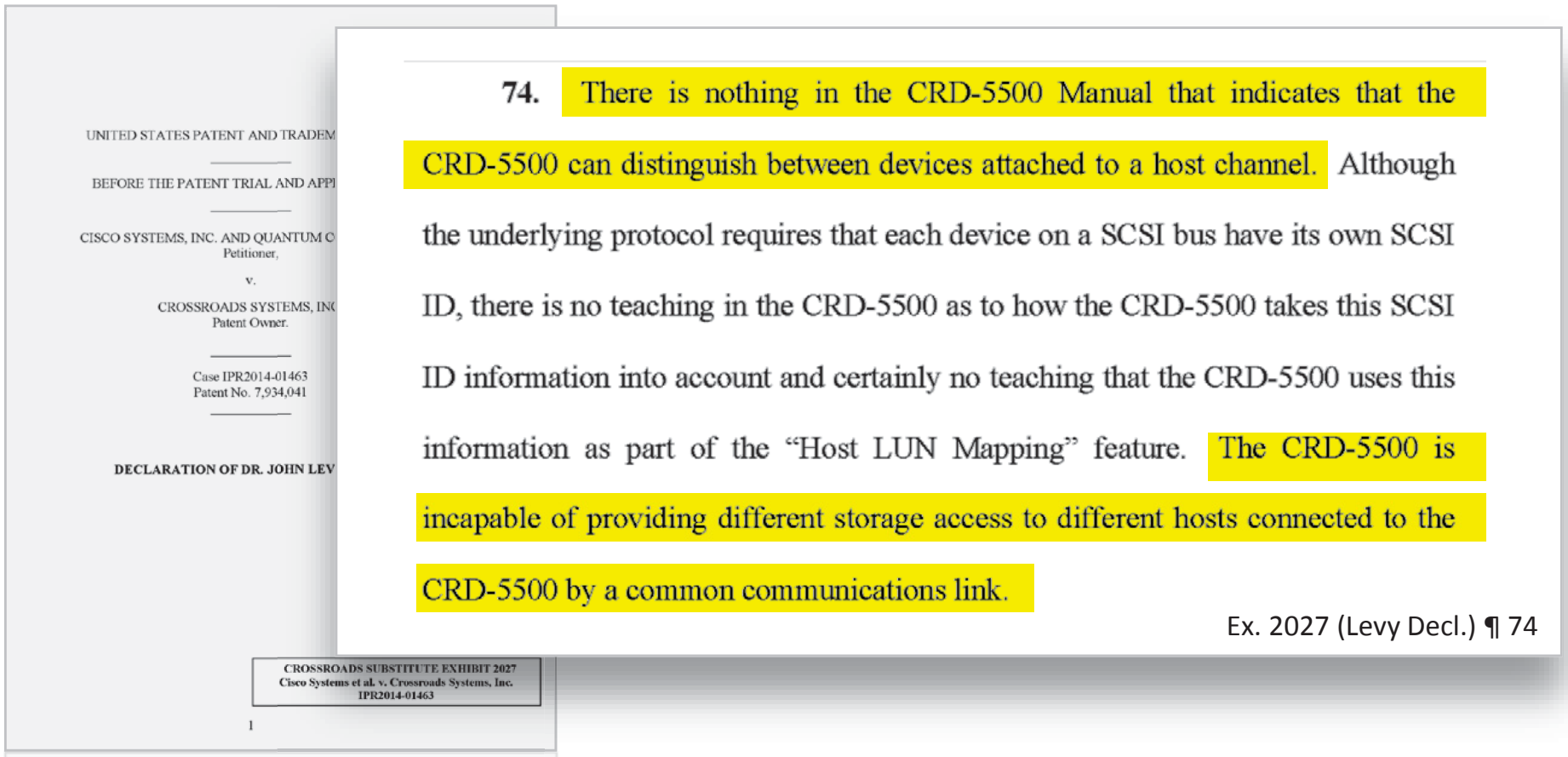

UNITED STATES PATENT AND TRADEM

BEFORE THE PATENT TRIAL AND APP

CISCO SYSTEMS, INC. AND QUANTUM C
Petitioner,

v.

CROSSROADS SYSTEMS, IN
Patent Owner.

Case IPR2014-01463
Patent No. 7,934,041

DECLARATION OF DR. JOHN LEV

CROSSROADS SUBSTITUTE EXHIBIT 2027
Cisco Systems et al. v. Crossroads Systems, Inc.
IPR2014-01463

1

74. There is nothing in the CRD-5500 Manual that indicates that the CRD-5500 can distinguish between devices attached to a host channel. Although the underlying protocol requires that each device on a SCSI bus have its own SCSI ID, there is no teaching in the CRD-5500 as to how the CRD-5500 takes this SCSI ID information into account and certainly no teaching that the CRD-5500 uses this information as part of the "Host LUN Mapping" feature. The CRD-5500 is incapable of providing different storage access to different hosts connected to the CRD-5500 by a common communications link.

Ex. 2027 (Levy Decl.) ¶ 74

cited in 1463 POR at 36

Petitioners' Expert Agrees that the CRD Does Not Identify Hosts

When asked, Petitioners' expert repeatedly said CRD cannot identify hosts:

Q. Is there anything in the CRD user manual that indicates that the CRD has a concept of the identity of the host?

MR. ROBERTS: Objection; asked and answered.

A. Yeah, I'm not aware of it.

Ex. 2028 (Hospodor Depo.) at 192:14-19

Q. Is there anything in this user manual that talks about making a differentiation between hosts on a given SCSI interface?

A. I have not -- I'm not aware of anything.

Ex. 2028 (Hospodor Depo.) at 195:5-8; see also 194:5-9, 17-22

cited in 1226 POR at 17

The Claimed Invention Maps Storage to Devices, NOT Channels (i.e. First Controller)

1. A storage router for providing virtual local storage on remote storage devices to devices, comprising:

a buffer providing memory work space for the storage router;

a first controller operable to connect to and interface with a first transport medium;

a second controller operable to connect to and interface with a second transport medium; and

a supervisor unit coupled to the first controller, the second controller and the buffer, the supervisor unit operable to map between devices connected to the first transport medium and the storage devices, to implement access controls for storage space on the storage devices and to process data in the buffer to interface between the first controller and the second controller to allow access from devices connected to the first transport medium to the storage devices using native low level, block protocols.

'035 Patent; Claim 1

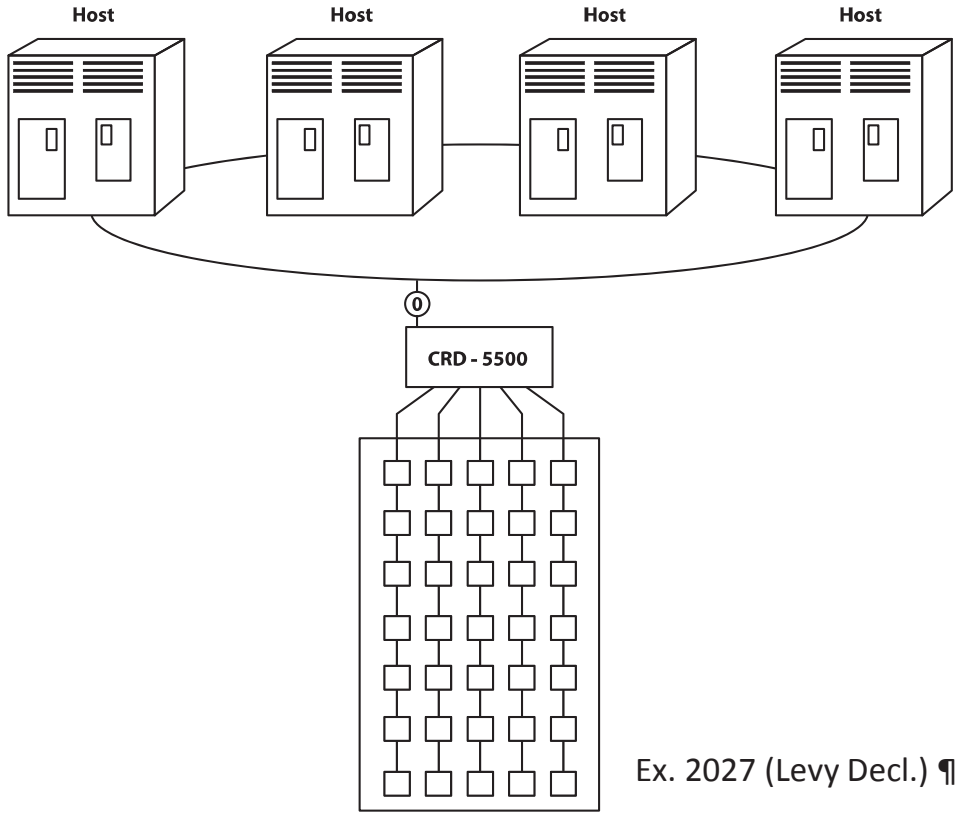

Ex. 2027 (Levy Decl.) ¶ 89

1226 Pet. at 28-29; 1226 POR at 8-9, 14-23, 35

The Claimed Invention Maps Storage to Devices, NOT Channels (i.e. First Controller)

1. A storage router for providing virtual local storage on remote storage devices to devices, comprising:

a buffer providing memory work space for the storage router;

a first controller operable to connect to and interface with a first transport medium;

a second controller operable to connect to and interface with a second transport medium; and

a supervisor unit coupled to the first controller, the second controller and the buffer, the supervisor unit operable to map between devices connected to the first transport medium and the storage devices, to implement access controls for storage space on the storage devices and to process data in the buffer to interface between the first controller and the second controller to allow access from devices connected to the first transport medium to the storage devices using native low level, block protocols.

'035 Patent; Claim 1

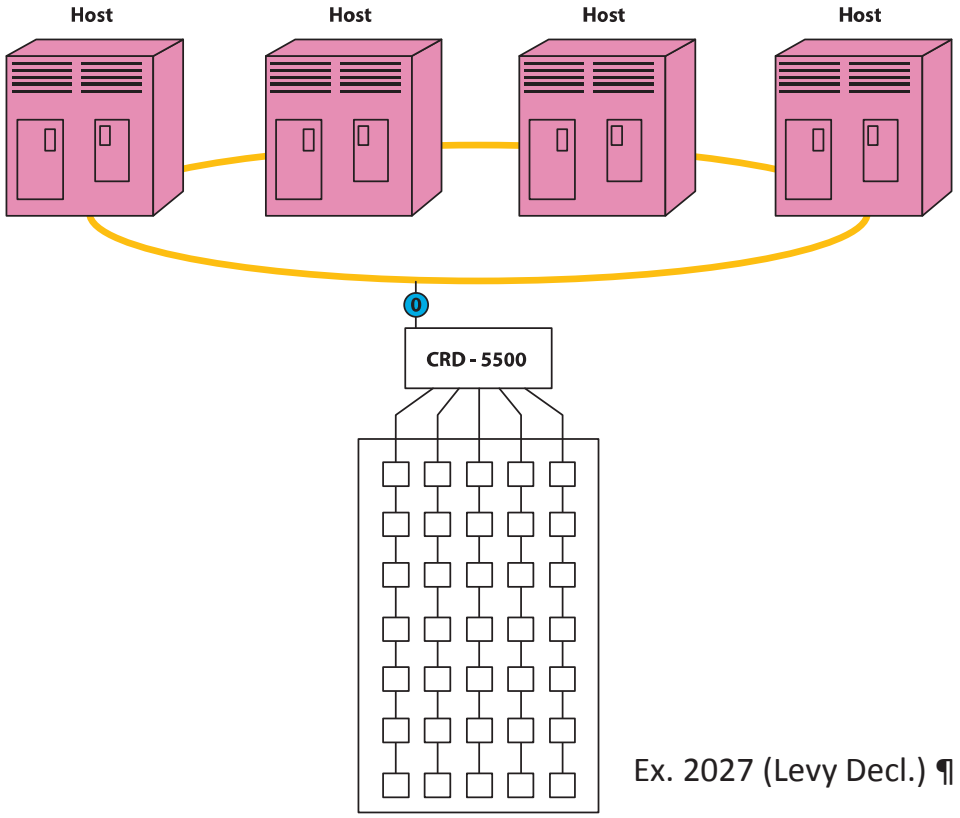

Ex. 2027 (Levy Decl.) ¶ 89

1226 Pet. at 28-29; 1226 POR at 8-9, 14-23, 35

The CRD Will Not Be Able to Distinguish Hosts on a Fibre Channel Loop Any Better Than On a SCSI Bus

Q. Is there anything in this user manual that talks about making a differentiation between hosts on a given SCSI interface?

A. I have not -- I'm not aware of anything.

Ex. 2028 (Hospodor Depo.) at 195:5-8; see also 194:5-9, 17-22

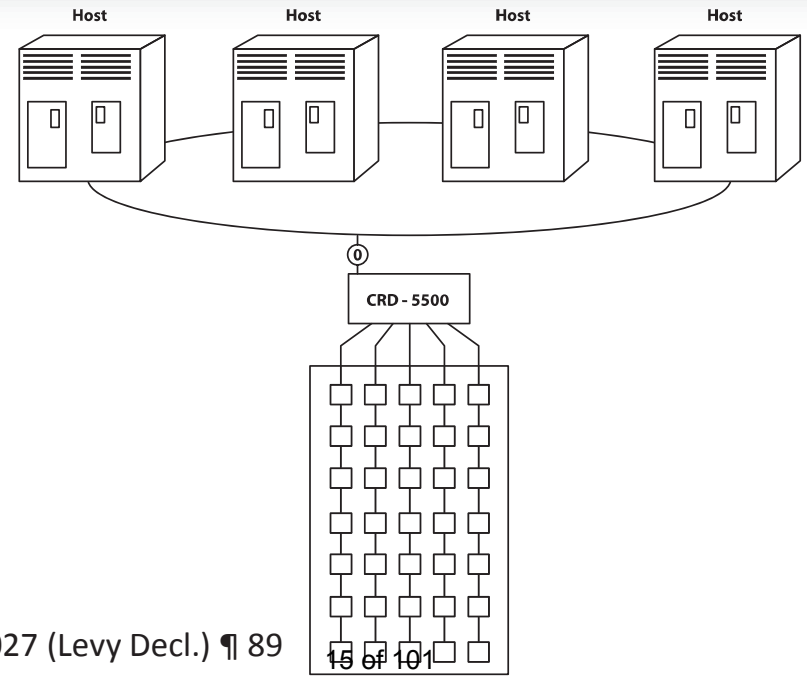

Ex. 2027 (Levy Decl.) ¶ 89

cited in 1226 POR at 17, 35

Petitioners' Combination Uses the Host LUN Mapping of the CRD As-Is, with No Capability to Map to Hosts

- The CRD and its Host LUN Mapping are only capable of allocating storage to channels
- Adding Fibre Channel does not change any of these capabilities

But the claimed mapping requires mapping hosts to storage space to allow access control

In their Reply, Petitioners State that One of Skill in the Art Would Add New Capabilities to the Host LUN Mapping to Map to Hosts

Petitioners' Reply Asserts Creating New Data Structures for the Host LUN Mapping

In their Reply, Petitioners assert that data structures would have to be created to map hosts to storage space:

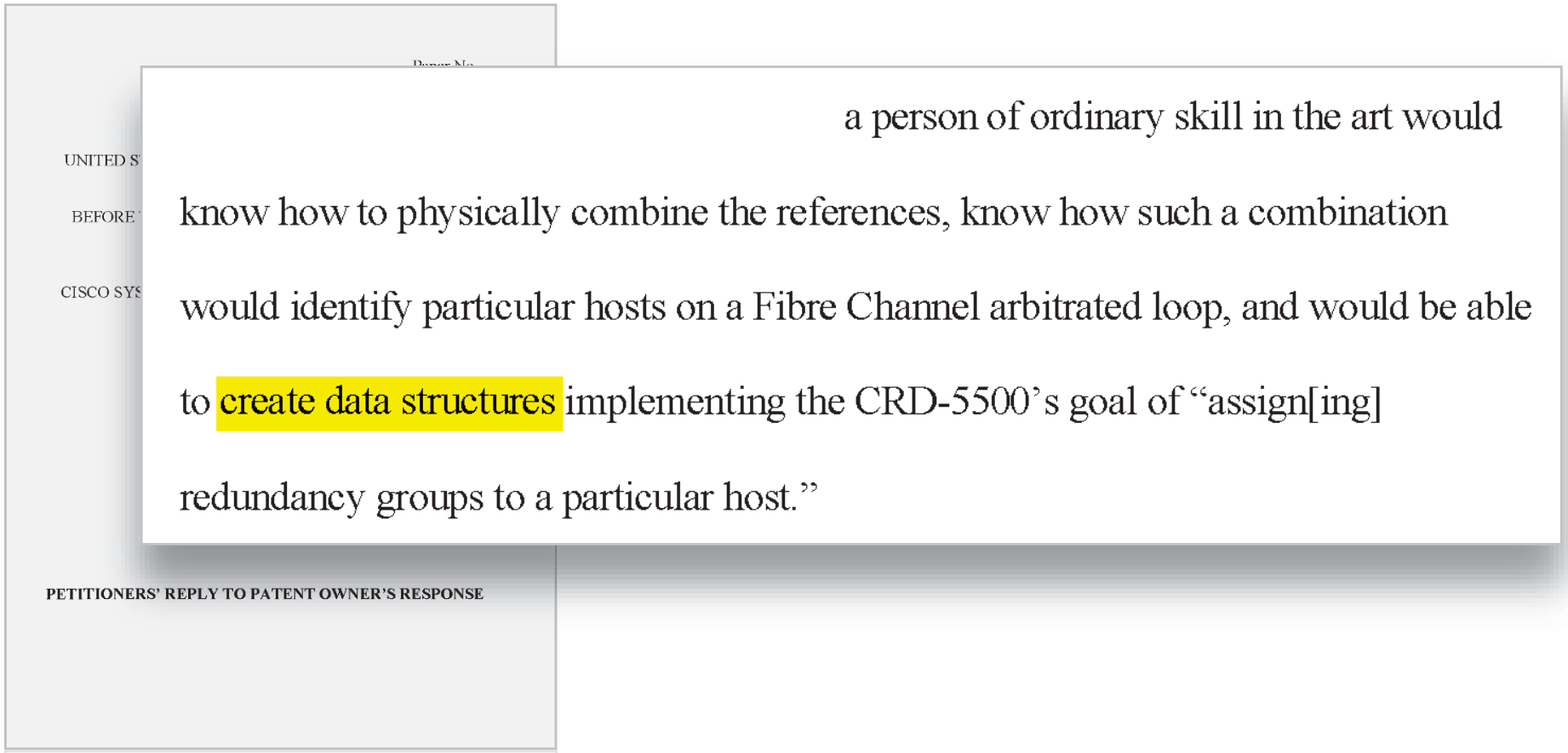
UNITED S

BEFORE

CISCO SYS

a person of ordinary skill in the art would know how to physically combine the references, know how such a combination would identify particular hosts on a Fibre Channel arbitrated loop, and would be able to create data structures implementing the CRD-5500's goal of "assign[ing] redundancy groups to a particular host."

PETITIONERS' REPLY TO PATENT OWNER'S RESPONSE

1226 Reply at 16

In their Reply, Petitioners Assert that Per-Host Mapping was the Intent of the CRD-5500 All Along

Petitioners argue in their Reply that the CRD-5500 manual has no disclosure of multiple hosts connected to one channel:

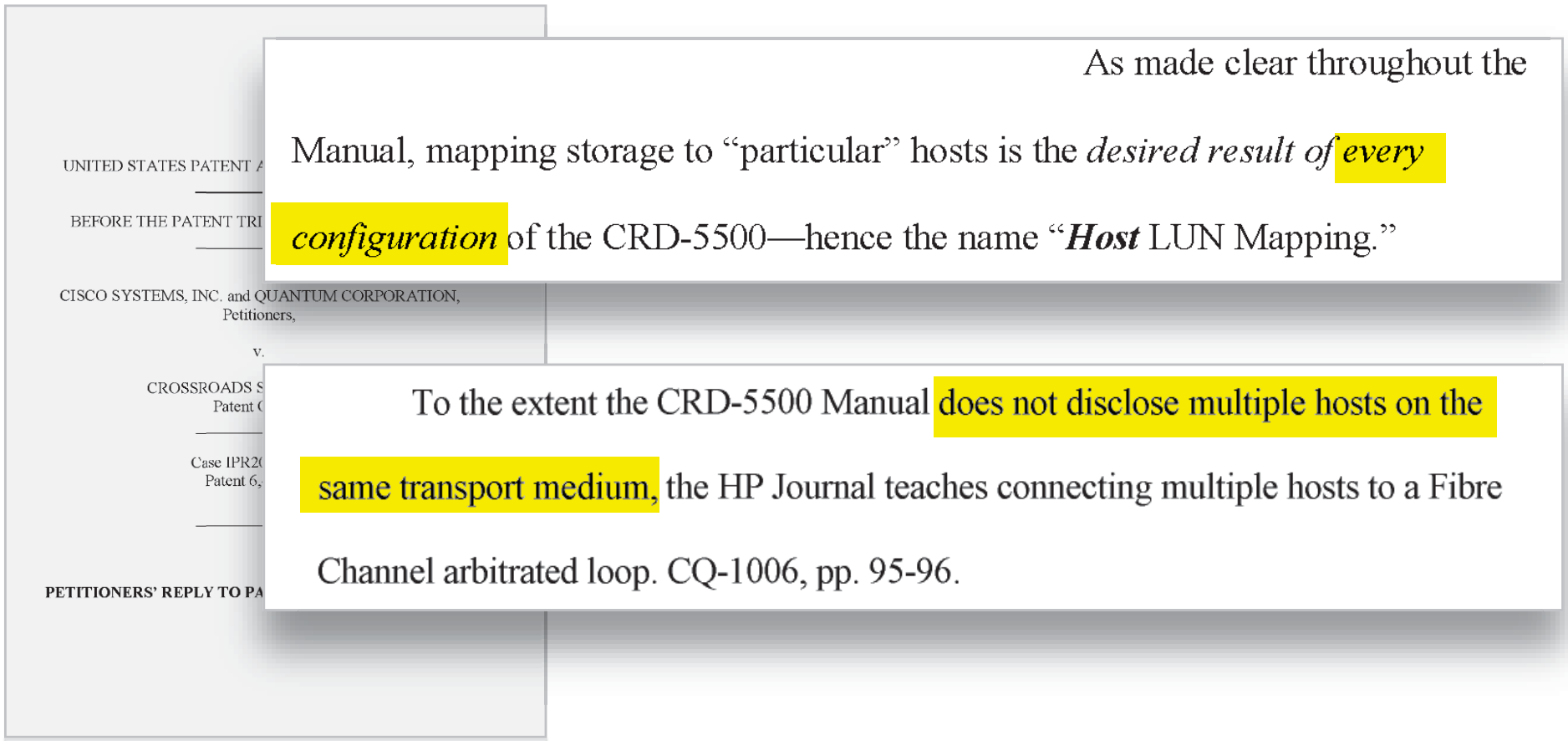

UNITED STATES PATENT A

BEFORE THE PATENT TRI

CISCO SYSTEMS, INC. and QUANTUM CORPORATION,
Petitioners,

v.

CROSSROADS S
Patent (

Case IPR2(
Patent 6,

PETITIONERS' REPLY TO PA

As made clear throughout the Manual, mapping storage to "particular" hosts is the *desired result of* every *configuration* of the CRD-5500—hence the name "***Host*** LUN Mapping."

To the extent the CRD-5500 Manual does not disclose multiple hosts on the same transport medium, the HP Journal teaches connecting multiple hosts to a Fibre Channel arbitrated loop. CQ-1006, pp. 95-96.

1226 Reply at 14, 16, 19

Petitioners Then Ascribe a Goal to the CRD-5500 of Per-Host Mapping, Claiming that Would Lead to the Invention

Petitioners' in their Reply further conclude that the goal of the CRD-5500 is to map storage to particular hosts:

to create data structures implementing the CRD-5500's goal of "assign[ing] redundancy groups to a particular host."

UNITED STATES PATENT AND TRADEMARK OFFICE

BEFORE THE PATENT TRIAL AND APPEAL BOARD

CISCO SYSTEMS, INC. and QUANTUM CORPORATION,
Petitioners,

v.

CROSSROADS SYSTEMS, INC.,

PETITION

On the foundation of these mistaken allegations Petitioners assert that:

These teachings combined with the knowledge of a person of ordinary skill in the art render obvious a map that allocates storage to multiple hosts on the same transport medium.

1226 Reply at 15, 16

Petitioners in their Reply Rely on the Knowledge of One of Ordinary Skill in the Art to Create New Data Structures Using a Host Identifier instead of the Channel Number

Petitioners cite Hospodor ¶ 61 to support the following conclusion.

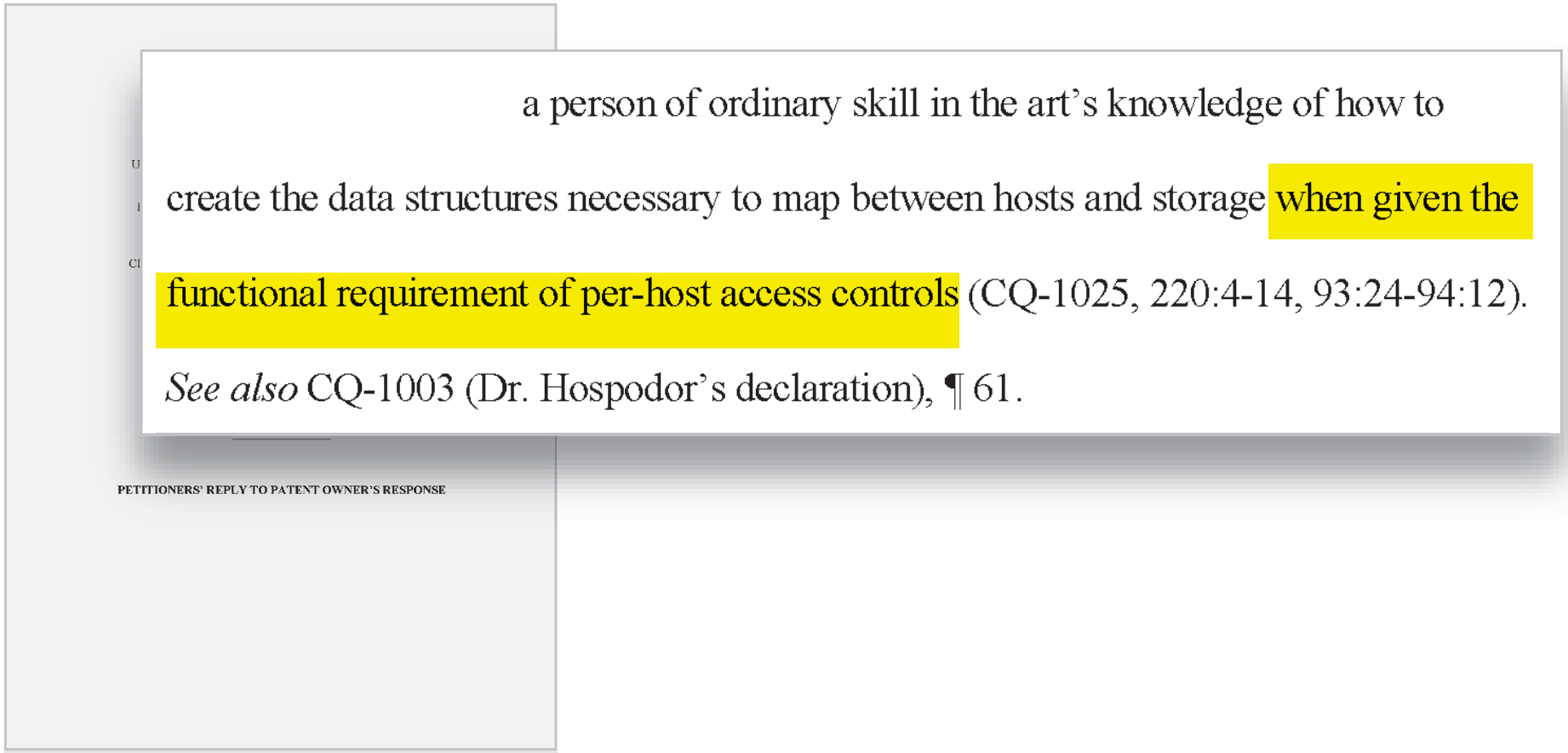

a person of ordinary skill in the art's knowledge of how to create the data structures necessary to map between hosts and storage when given the functional requirement of per-host access controls (CQ-1025, 220:4-14, 93:24-94:12). *See also* CQ-1003 (Dr. Hospodor's declaration), ¶ 61.

PETITIONERS' REPLY TO PATENT OWNER'S RESPONSE

1226 Reply at 19

Petitioners' Expert Based His Opinion on a Mistaken Belief About the CRD-5500

Petitioners' Expert mistakenly believes that only one host can be connected to one channel.

Q. And anyone on that bus could talk to SCSI -- so if we've set SCSI ID 0 for that channel 0 interface card, any host that is attached to channel 0 can send a request to SCSI ID 0 for one of the LUNs listed here in this 4-5 figure on page 28, correct?

A. It's not my understanding of the teachings of the CRD -- of the CRD-5500 manual that it supports multiple hosts on the same channel.

Ex. 2028 (Hospodor Depo.) at 188:20-189:4

cited in 1226 POR at 21

Petitioners and Dr. Hospodor are Wrong: The CRD-5500 Manual Shows Multiple Hosts on One Channel

Petitioners and Dr. Hospodor ignore the configuration where multiple hosts are on the same channel:

CRD-5500

SCSI RAID Controller
User's Manual

CMD Technology, Inc.
1 Vanderbilt
Irvine, California 92618
(714) 454-0800

Cisco Systems, Inc. and Quantum Corporation v. Crossroads Systems, Inc.
CQ-1004 / Page 1 of 92

The configuration diagrammed in Figure 6-8 supports a dual-ported host environment (e.g., VMS/AXP SCSI cluster, Windows NT cluster, TruCluster for DEC UNIX).

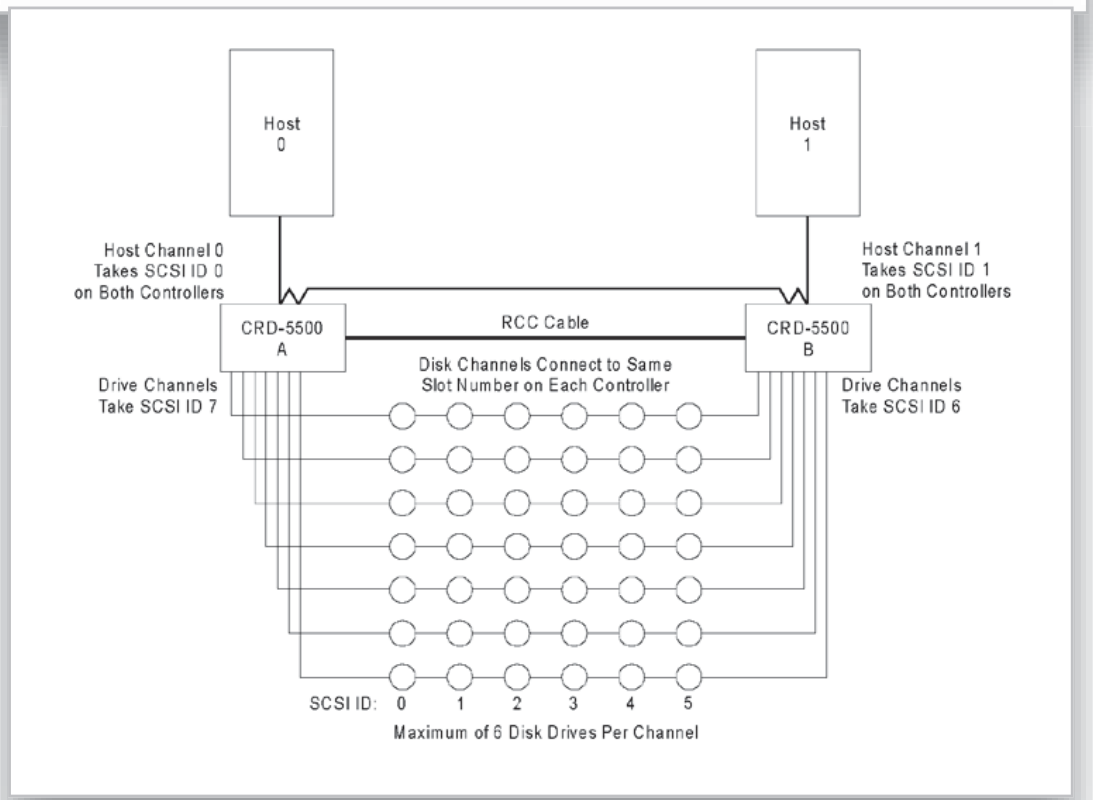

Ex. 1004 at 6-13

23 of 101

cited in 1226 POR at 21-22

The CRD-5500's Multiple Host Configuration (Just like Tachyon)

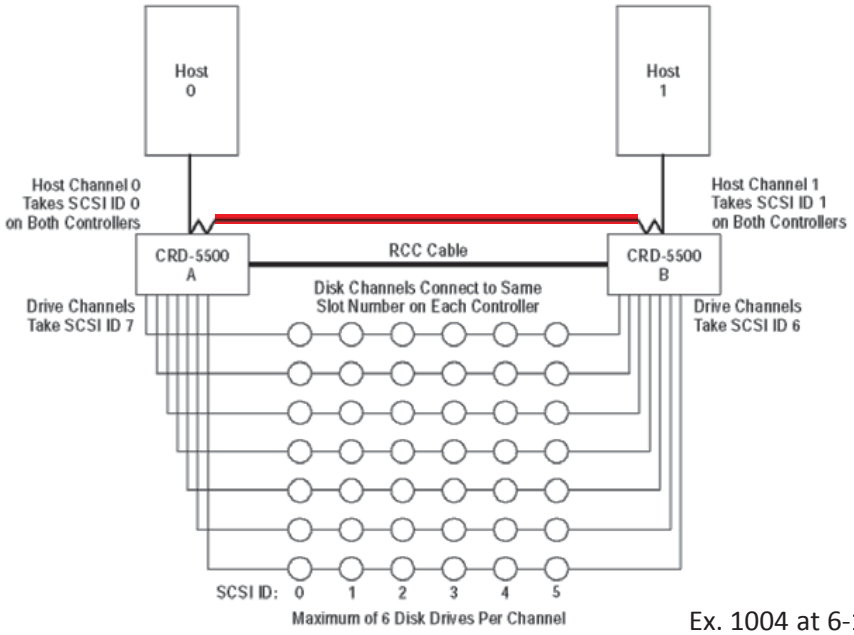

Ex. 1004 at 6-13

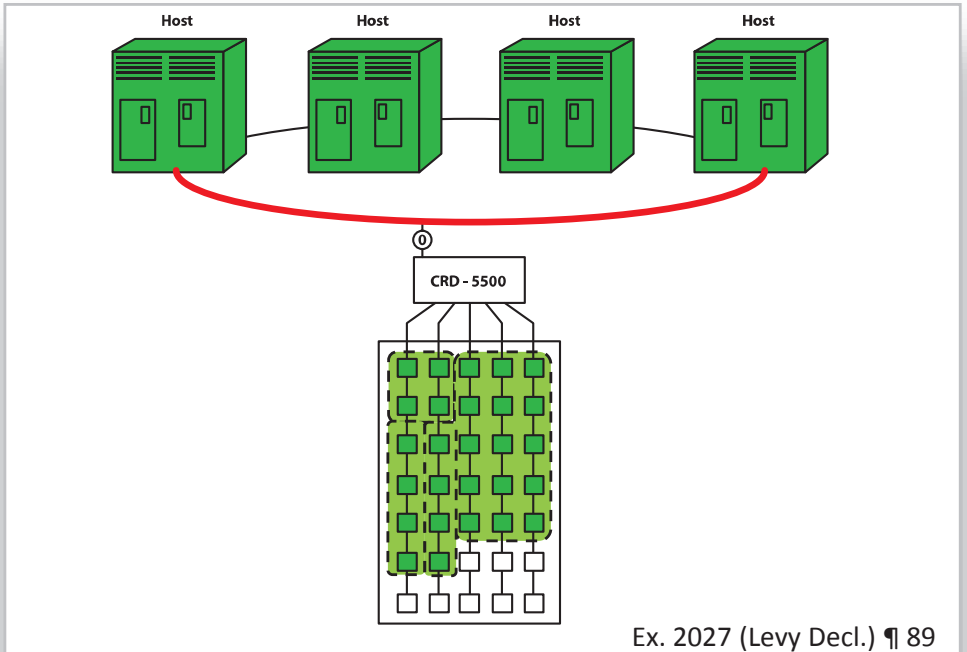

Ex. 2027 (Levy Decl.) ¶ 89

Q. But you can have multiple devices on a SCSI interface, correct?

A. Yes, you can certainly have multiple devices on a SCSI interface.

Q. And each of those devices could have a separate SCSI ID, correct?

A. That is correct

Ex. 2028 (Hospodor Depo.) at 188:10-16

cited in 1226 POR at 21, 35

The CRD-5500's Multiple Host Configuration (Just like Tachyon)

Ex. 1004 at 6-13

Q. But you can have multiple devices on a SCSI interface, correct?

A. Yes, you can certainly have multiple devices on a SCSI interface.

Q. And each of those devices could have a separate SCSI ID, correct?

A. That is correct.

Ex. 2028 (Hospodor Depo.) at 188:10-16

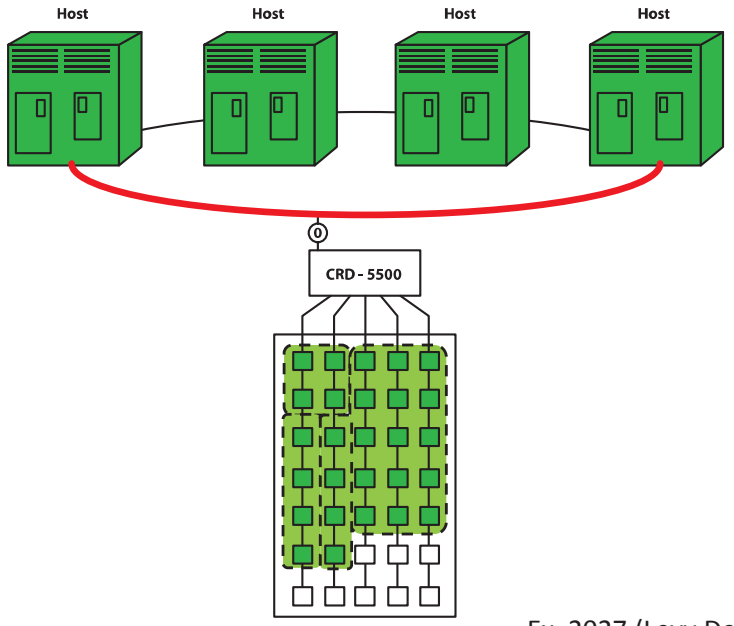

Ex. 2027 (Levy Decl.) ¶ 89

cited in 1226 POR at 17, 21, 35

But Both Experts Agree that the CRD-5500 Cannot Distinguish Between Multiple Hosts on One Channel

74. There is nothing in the CRD-5500 Manual that indicates that the CRD-5500 can distinguish between devices attached to a host channel.

1463 Ex. 2027 (Levy Decl.) ¶ 74

Q. Is there anything in the CRD user manual that indicates that the CRD has a concept of the identity of the host?

MR. ROBERTS: Objection; asked and answered.

A. Yeah, I'm not aware of it.

Ex. 2028 (Hospodor Depo.) at 192:14-19

Q. Is there anything in this user manual that talks about making a differentiation between hosts on a given SCSI interface?

A. I have not -- I'm not aware of anything.

Ex. 2028 (Hospodor Depo.) at 195:5-8; see also 194:5-9, 17-22

cited in 1226 POR at 17, 36; , 1463 POR at 36

Adding a Tachyon Fibre Channel Interface Does Nothing to Solve the Fundamental Issue that the CRD-5500 Can Not Identify Multiple Hosts on a Single Channel

Ex. 1004 at 6-13

Q. But you can have multiple devices on a SCSI interface, correct?

A. Yes, you can certainly have multiple devices on a SCSI interface.

Q. And each of those devices could have a separate SCSI ID, correct?

A. That is correct.

Ex. 2028 (Hospodor Depo.) at 188:10-16

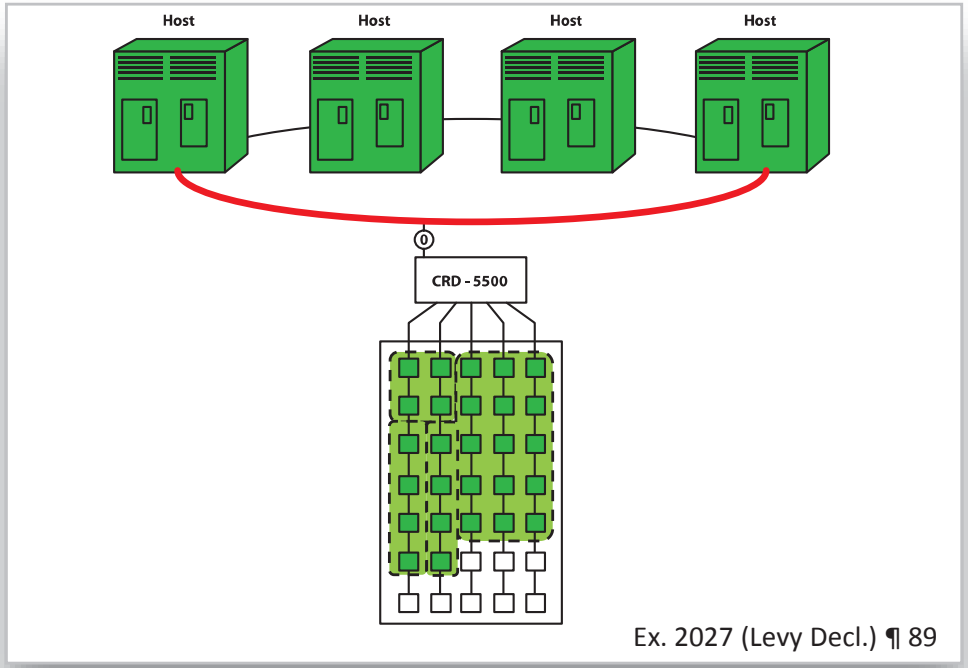

Ex. 2027 (Levy Decl.) ¶ 89

cited in 1226 POR at 17, 21-22, 30-31, 35

In their Reply, Petitioners State that One of Skill in the Art Would Add New Capabilities to the Host LUN Mapping to Map to Hosts

- New combination - not a basis upon which was trial was instituted
- No evidentiary support – Hospodor says no changes for combination
- Petitioners' position in reply is based on an erroneous foundation
  - CRD has a multi-host embodiment
  - It was not the goal of CRD to have per-host mapping
  - Both experts agree CRD cannot distinguish multiple hosts on one channel

Petitioners Assert in their Reply that One Host Per Channel is a Per-Host System Rather than a Channel Based System – the Evidence Shows Otherwise

Further Evidence that Petitioners' Original Combination Fails is Their Attempt in the Reply to Rely on a Single Host Per Channel

The Petition relied on multiple hosts on a single Fibre Channel loop

Petitioners' Reply relies on a "one host per channel" configuration:

Petition

One of ordinary skill in the art would have been motivated to move the plurality of hosts individually connected to the CRD-5500 RAID Controller (via SCSI buses) to a single Fibre Channel arbitrated loop communication link because doing so would save I/O slots in the CRD-5500 and minimize cabling infrastructure. CQ-1006, pp. 94, 100, 101.

1226 Pet. at 40-41

Reply

Patent Owner attempts to dismiss the CRD-5500 Manual's explicit disclosure of per-host mapping and access controls as the mere "effect" of the CRD-5500 configuration in which there is one host per channel. *See* Resp. at 30. In any event, a single configuration in the CRD-5500 Manual that discloses "assign[ing] redundancy groups to a particular host" (CQ-1004, p. 1-2) is sufficient to meet the claimed "map" limitation, regardless of any other disclosed configurations.

1226 Reply at 14

The Invention Requires Mapping Hosts to Storage, NOT Mapping Channel/Controller to Storage as Petitioners Assert

In reply, Petitioners assert that putting one host on one channel in the CRD invalidates the patents. BUT, this ignores that the basic function of the patents is to allocate specific storage to specific hosts—NOT to a Channel

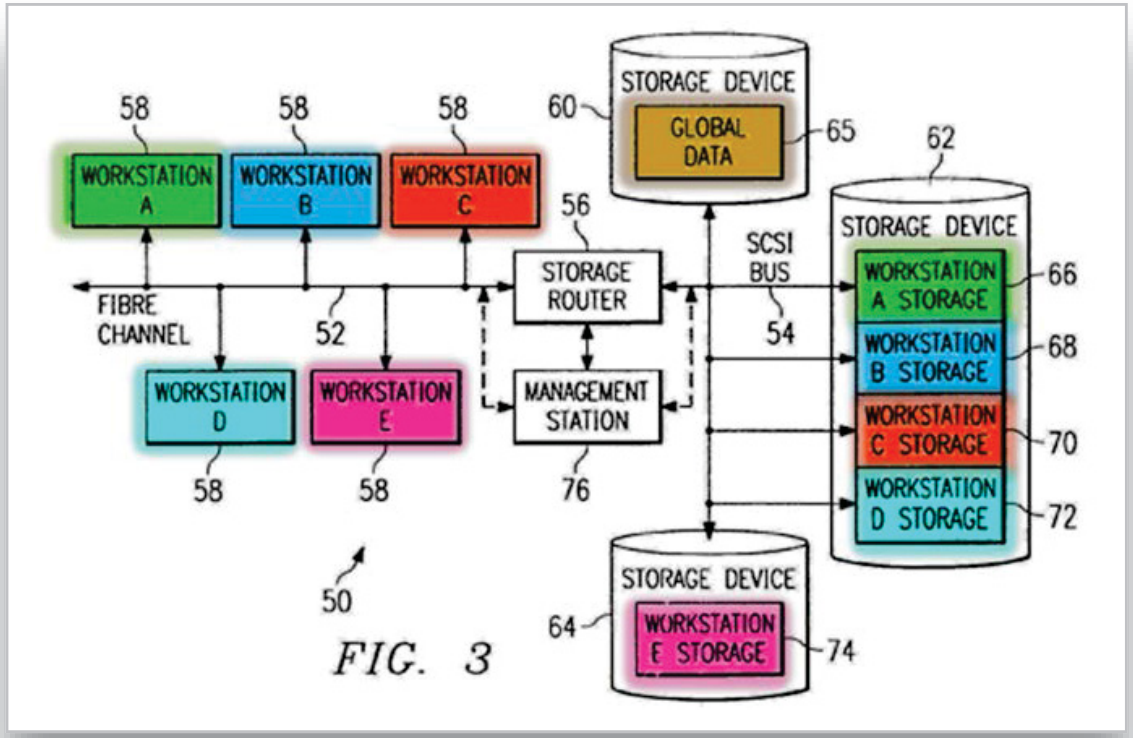

FIG. 3

The Claimed Invention Maps to Devices, Not a Channel (i.e. First Controller)

1. A storage router for providing virtual local storage on remote storage devices to devices, comprising:

a buffer providing memory work space for the storage router;

a first controller operable to connect to and interface with a first transport medium;

a second controller operable to connect to and interface with a second transport medium; and

a supervisor unit coupled to the first controller, the second controller and the buffer, the supervisor unit operable to map between devices connected to the first transport medium and the storage devices, to implement access controls for storage space on the storage devices and to process data in the buffer to interface between the first controller and the second controller to allow access from devices connected to the first transport medium to the storage devices using native low level, block protocols.

'035 Patent; Claim 1

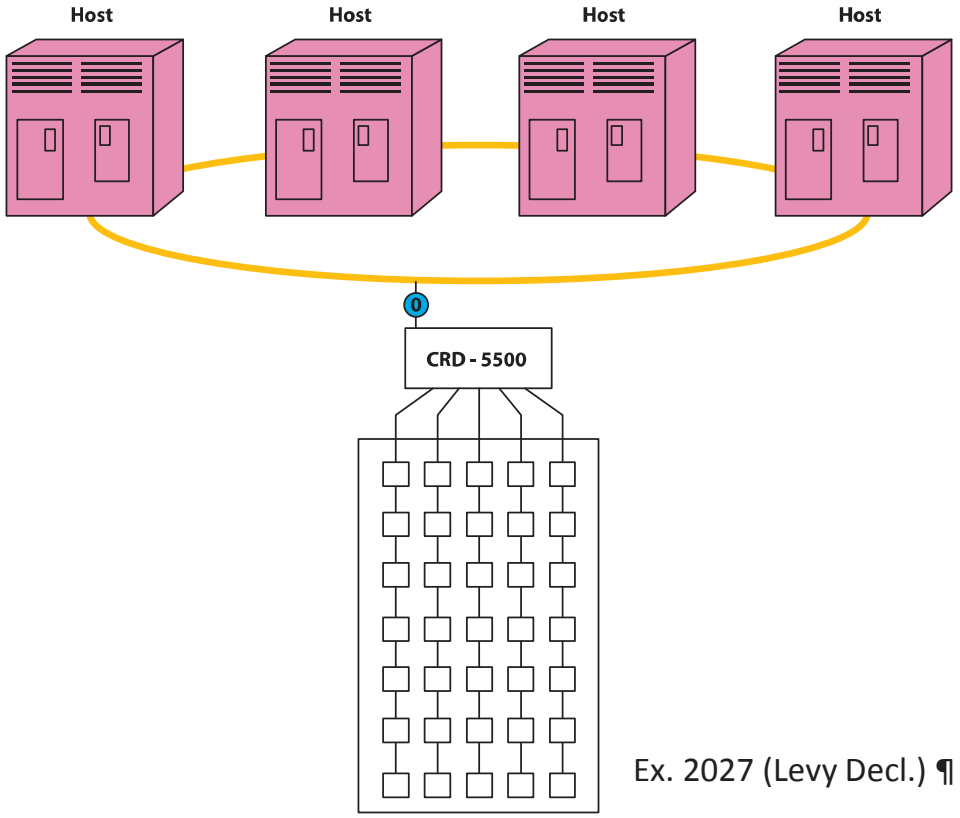

Ex. 2027 (Levy Decl.) ¶ 89

1226 Pet. at 28-29; 1226 POR at 8-9, 14-23

The Capability to Map to Hosts is the Basic Function of the Invention Not an Incidental Result

The invention requires the capability to map different storage to different hosts on the same transport medium (i.e., a common communications link):

UNITED STATES PATENT AND TRADEMARK OFFICE

BEFORE THE PATENT TRIAL AND APPEAL BOARD

CISCO SYSTEMS, INC. and
QUANTUM CORPORATION.
Petitioners

PATENT OV

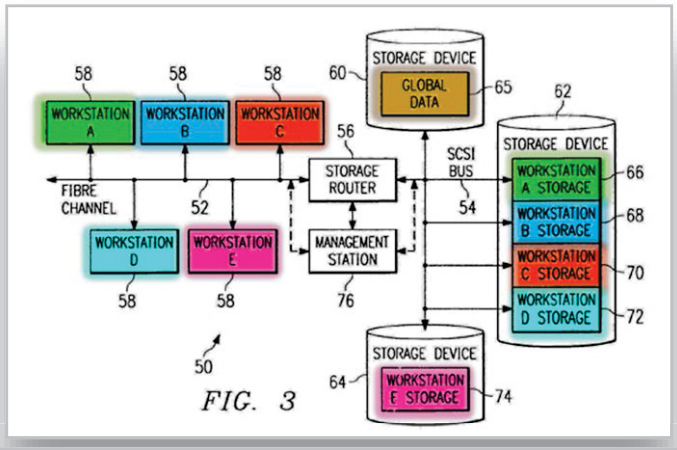

FIG. 3

Importantly, in Figure 3, workstations 58 are interconnected with storage router 56 by the **same** interconnect, *i.e.*, "a common Fibre Channel high speed serial transport." Ex. 1001, 3:67-4:4. In other words, all five workstations are on the same transport medium.

cited in 1226 POR at 8

Claimed Access Controls are Specific to the Host Device

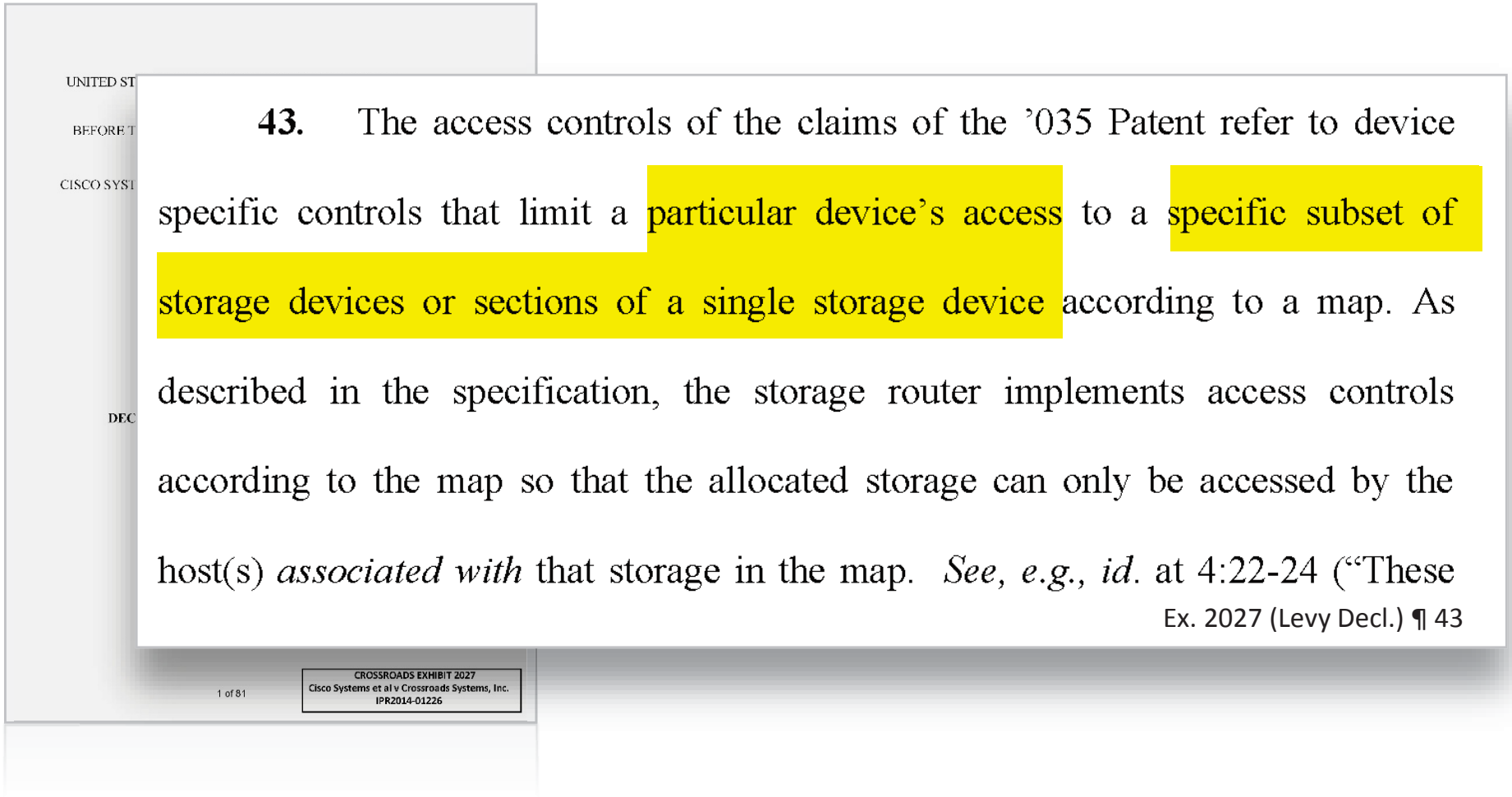
UNITED ST

BEFORE T

CISCO SYST

DEC

43. The access controls of the claims of the '035 Patent refer to device specific controls that limit a particular device's access to a specific subset of storage devices or sections of a single storage device according to a map. As described in the specification, the storage router implements access controls according to the map so that the allocated storage can only be accessed by the host(s) *associated with* that storage in the map. *See, e.g., id.* at 4:22-24 ("These

Ex. 2027 (Levy Decl.) ¶ 43

1 of 81

CROSSROADS EXHIBIT 2027
Cisco Systems et al v Crossroads Systems, Inc.
IPR2014-01226

cited in 1226 POR at 11-12

Even with One Host Per Channel, the Combination Does Not Show Host Device Specific Access Controls

Because the CRD-5500 Assigns Storage to Channels, Moving the Host to another Channel Provides Access to Different Storage.

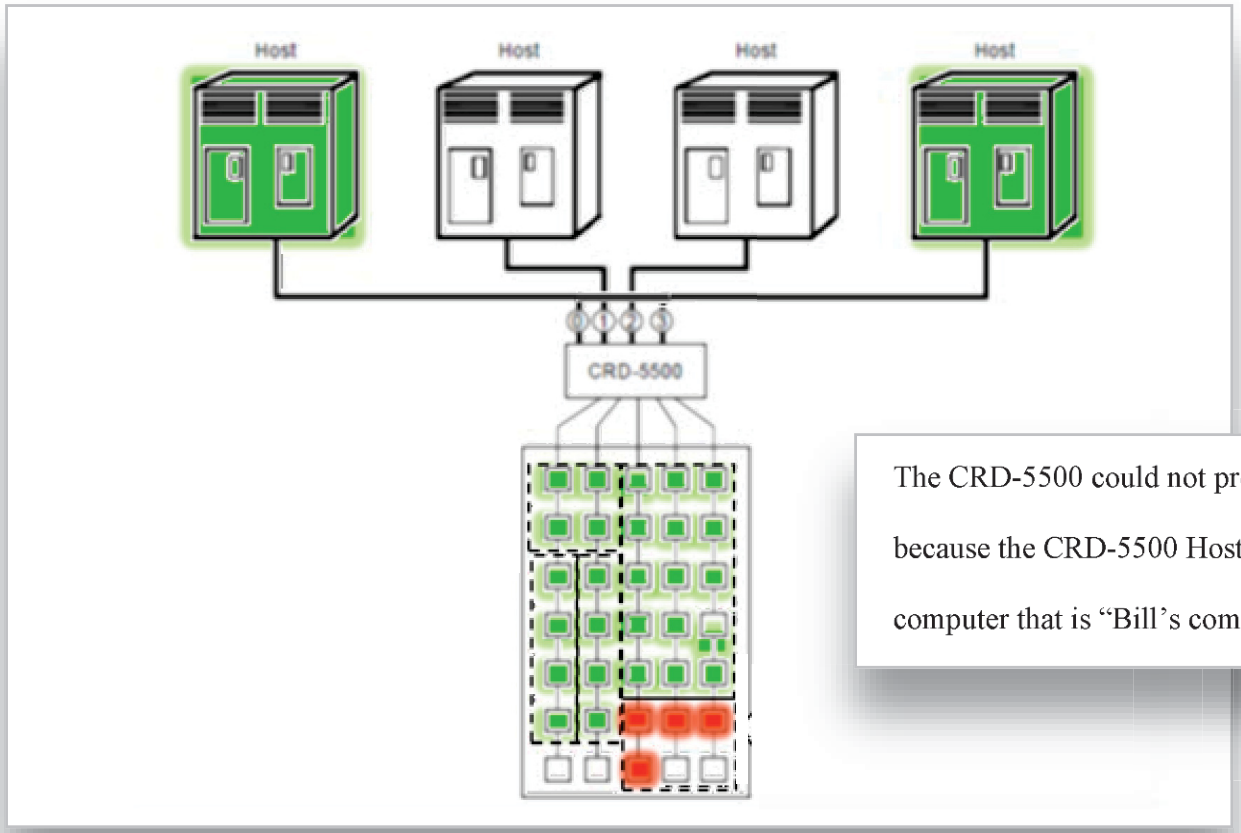

The CRD-5500 could not prevent Bill's computer from accessing Lisa's storage because the CRD-5500 Host LUN Mapping has no concept of the particular computer that is "Bill's computer."

cited in 1226 POR at 37-38

The Combination Does Not Allocate Storage to Particular Hosts According to a Map, Access to Storage is Determined by Physical Cabling

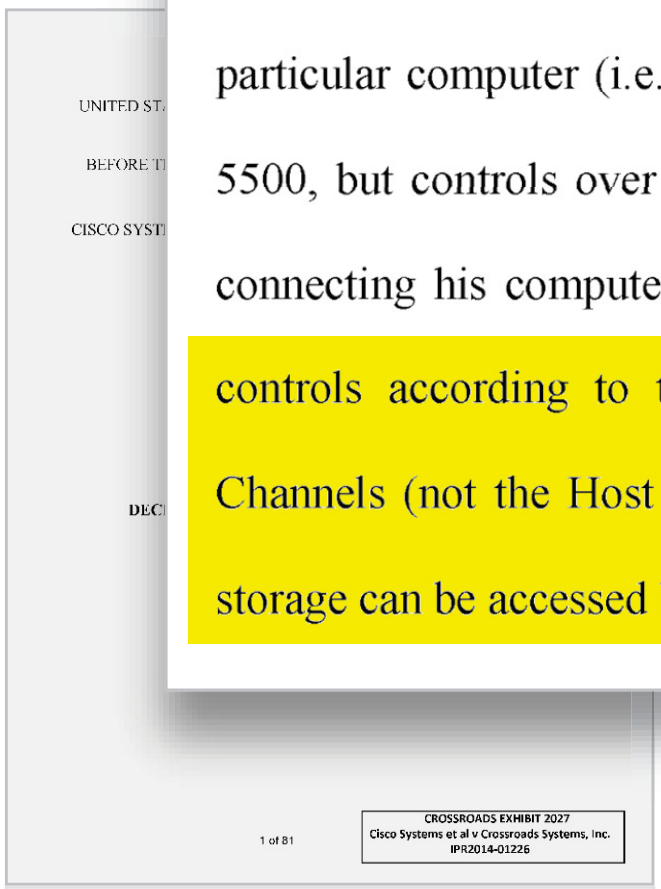

What limits the access of the particular computer (i.e., Bill's computer) to the specific storage is not the CRD-5500, but controls over the physical cabling (*i.e.*, controls that prevent Bill from connecting his computer to Port 0). The CRD-5500 does not implement access controls according to the map because it is the physical connections to the Channels (not the Host LUN Mapping table of the CRD-5500) that define what storage can be accessed by which hosts.

Ex. 2027 (Levy Decl.) ¶ 94

Petitioners' One Host Per Channel Combination Does Not Meet the Claimed Map Which Requires Mapping Hosts to Storage Space

- New combination - not a basis upon which trial was instituted

- Having only one host on one channel does not change a channel allocation system like CRD into the per-host mapping system of the claimed invention

Petitioners Have Failed to Prove Unpatentability on any Asserted Ground

- The invention includes mapping and access controls between particular hosts and storage space
- Petitioners' combination uses the Host LUN Mapping of the CRD As-Is, with no capability to map to hosts
  - The CRD and its Host LUN Mapping are only capable of allocating storage to channels
  - Adding Fibre Channel does not change any of these capabilities

- In their Reply, Petitioners state that one of skill in the art would add new capabilities to the Host LUN Mapping to map to hosts
  - New combination - not a basis upon which trial was instituted
  - No evidentiary support - Hospodor says no changes for combination
  - Petitioners' position in reply is based on an erroneous foundation

- Petitioners assert in their Reply that one host per channel is a per-host system rather than a channel based system – the evidence shows otherwise
  - New combination – not a basis upon which trial was instituted

Thank You

Claim Terms – Map

“Mapping” Limitations

The claimed “mapping between devices connected to the first transport medium and the storage devices” requires that the claimed map specifically identify the host and its associated storage in order to allocate storage to particular hosts.

1226 POR at 11; 1463 POR at 10; 1544 POR at 8

Petitioners Argue Against a Straw Man Claim Construction Requiring Permanent Host Identification

Petitioners' Reply Creates a Straw Man Claim Construction Requiring Permanent Host Identification

Patent Owner Never Argues that the Host Identifier Must Be Perpetually Associated with a Particular Computer

Mapping Requires Identification of Particular Hosts, Not Perpetual Identification of Hosts

- "One of the ordinary skill in the art. . . would understand from the plain language and context of the claims that 'map[ping]' requires specifying a particular configuration– namely ***the association between a particular workstation*** and a particular remote storage device)" Ex. 2032 (Pet. Claim Construction Brief) at 3
- It further appears that ***this mapping prevents an initiator from accessing a subset of storage not allocated to it***—*i.e*. subsets of storage "can only be accessed by the associated workstation." Ex. 1003 (Hospodor Decl.) ¶ 31 cited in 1226 Pet. at 14
- So the subsets 66, 68, 70, and 72 here can only be accessed by associated workstation 58, meaning that ***they can only be accessed by the workstation 58 that's associated with that subset***. Ex. 2028 (Hospodor Depo.) at 121:12-26

cited in 1226 POR at 6-7, 9-10

The Claimed Map Must Identify the Particular Host

The specification requires the map to allocate storage to hosts so that it can only be accessed by the associated host

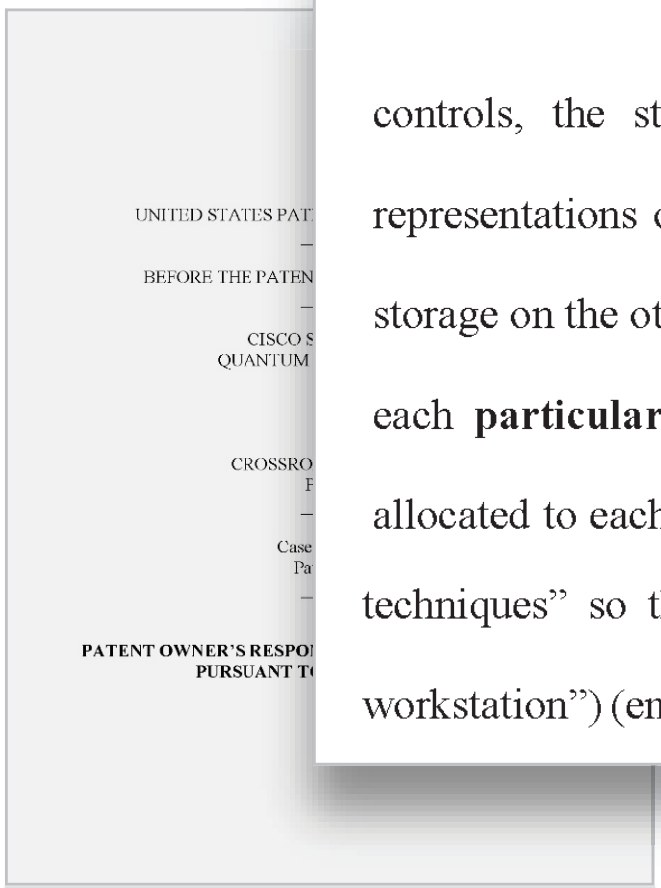
UNITED STATES PAT

BEFORE THE PATEN

CISCO S
QUANTUM

CROSSRO
F

Case
Pa

PATENT OWNER'S RESPO
PURSUANT T

In order to provide access controls, the storage router of the '035 Patent uses a map that associates representations of hosts on one side of the storage router with representations of storage on the other side of the storage router, to define what storage is available to each **particular** host. *See, e.g.*, Ex. 1001, 4:13-16, 22-25 (describing "storage allocated to each attached workstation" through "mapping tables or other mapping techniques" so that allocated storage "can only be accessed by the **associated** workstation") (emphasis added); *see also id.* at 8:67-9:6

1226 POR at 7-8

The Claimed Map Must Identify the Particular Host

If the map does not identify the host it cannot limit access to allocated storage to the associated workstation on the first transport medium

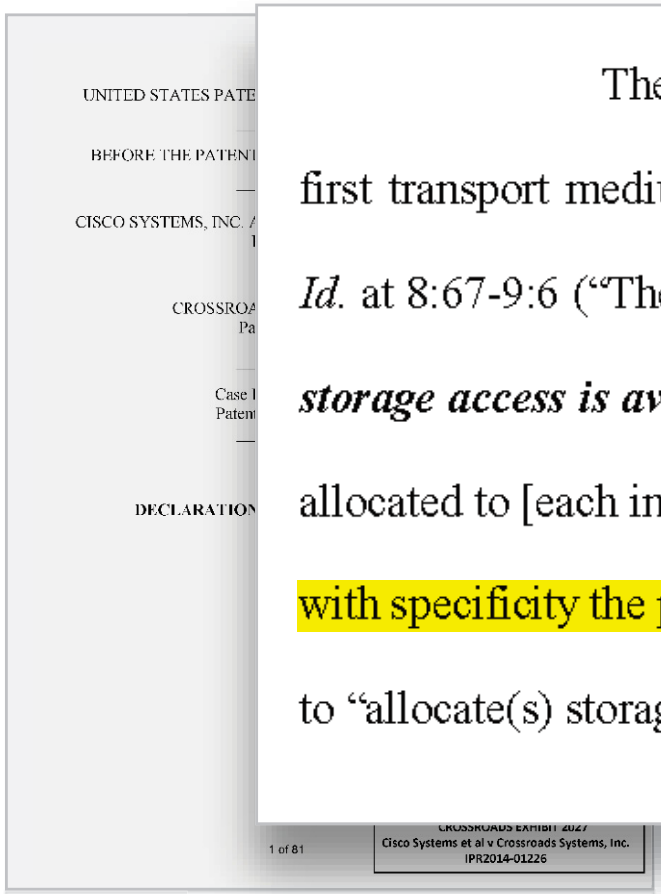

The storage router must identify the particular workstations on the first transport medium in order to allocate storage to the particular workstations. *Id.* at 8:67-9:6 ("The storage router can use tables to ***map, for each initiator, what storage access is available***" so that "[i]n this manner, the storage space . . . can be allocated to [each initiator].") (emphasis added). In other words, the map identifies with specificity the particular host that has access to storage represented in the map to "allocate(s) storage on storage devices to devices on the first transport medium."

Ex. 2027 (Levy Decl.) ¶ 39

cited in 1226 POR at 9

"The Claims Have to Do with What's in the Map, Not How it's Created"

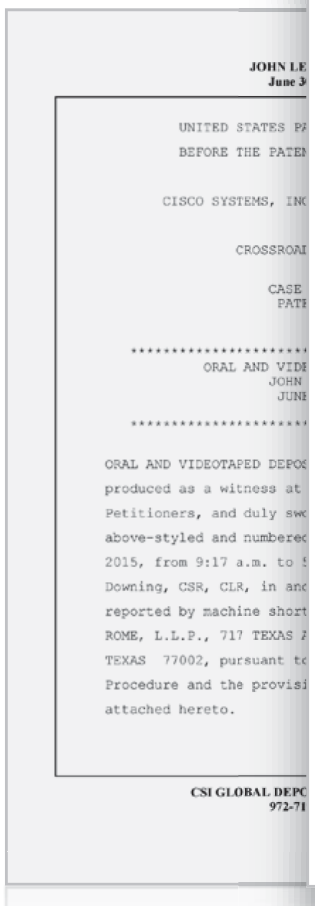
JOHN LE
June 3

UNITED STATES PA
BEFORE THE PATEN

CISCO SYSTEMS, INC

CROSSROAD

CASE
PATE

ORAL AND VIDE
JOHN
JUNE

ORAL AND VIDEOTAPED DEPOS
produced as a witness at
Petitioners, and duly swo
above-styled and numbered
2015, from 9:17 a.m. to
Downing, CSR, CLR, in and
reported by machine short
ROME, L.L.P., 717 TEXAS
TEXAS 77002, pursuant to
Procedure and the provisi
attached hereto.

CSI GLOBAL DEPO
972-71

Q. (BY MR. GAUDET) Okay. And that manual change would be covered by the claims in terms of the mapping function?

In other words, it wouldn't cease to be a map or cease to be the claimed access controls because of the fact that the administrator had to make manual changes to the map; is that correct?

MR. HALL: Objection; form.

A. I don't see a difference between the creation of a map and the recreation of another map, and so it wouldn't -- the claims have to do with what's in the map, not how it's created.

Ex. 1025 (Levy Depo.) at 155:16-156:2

FRE 106 (1226 Pet. Reply at 10, 19)

Claim Terms – Access Controls

“Access Control” Limitations

[A]ccess controls . . . refer to controls that limit a host computer’s access to a specific subset of storage devices or sections of a single storage device according to a map. That is, the access controls are device specific in that they limit a particular device’s access to specified storage according to the map.

48 of 101 1226 POR at 11-12; 1544 POR at 11; *see* 1463 POR at 10-11

Petitioners Create a Straw Man from Patent Owner's Response

1226 Reply at 8	1226 POR at 35
Patent Owner then asserts, however, that to meet the "access control" limitation, the prior art must additionally "provid[e] *different* storage access to *different* hosts." Resp. at 35	Unlike the claimed storage router, the CRD-5500 is **incapable** of providing different storage access to different hosts connected to the CRD-5500 by a common communications link.

The claimed access controls must only be **capable** of providing different storage access to different hosts.

Petitioners' Global Data Argument Misreads the Specification

Patent Owner's reinterpretation excludes the embodiment in Fig. 3 in which the mapping controls access to shared storage called global data 65, "which can be accessed by ***all*** the workstations 58." CQ-1001, 4:17-19 (emphasis added); CQ-1025, 165:11-14. Thus, in contrast to Patent Owner's requirement of "*different* storage access to *different* hosts," Fig. 3 describes the ***same*** storage access by different hosts.

1226 Reply at 9

The fact that **global data 65** can be accessed by all the workstations does not mean all workstations have access to the same **storage**, which includes non-global storage on Storage Devices 62 and 64

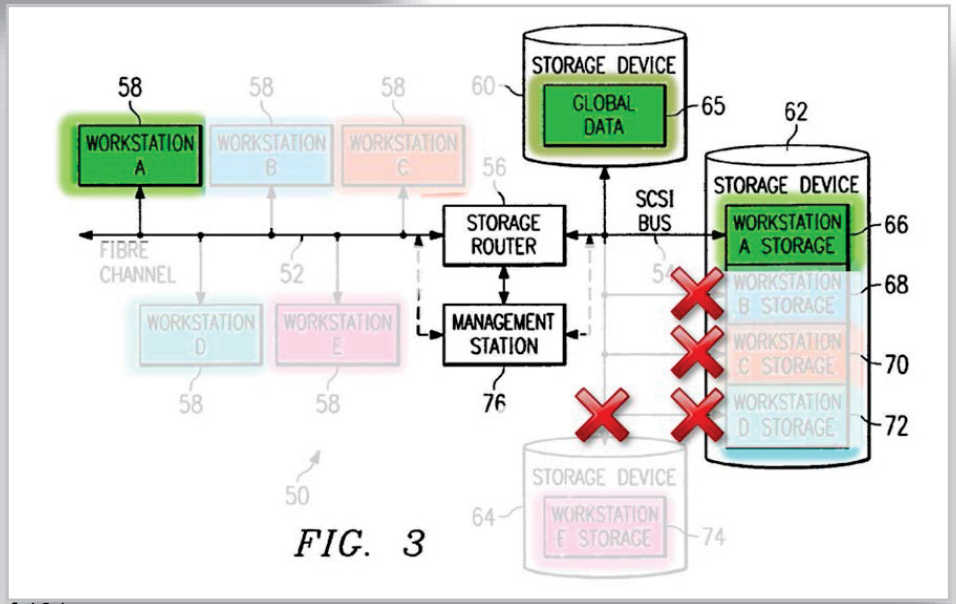

FIG. 3

1226 POR at 12-13
'035 Patent at 4:48-54

Petitioners' Global Data Argument Ignores the Language of the Claims

- Claim 2: "the supervisor unit maintains an allocation of subsets of storage space to ***associated devices*** connected to the first transport medium, wherein ***each subset*** is only accessible by ***the associated device*** connected to the first transport medium."

- "The plain reading of claim 2 is that the storage router is allocating subsets of storage to multiple devices on the first transport medium and then providing the capability of access control so that each particular subset may only be accessed by the particular host to which it has been allocated, not to every host." Ex. 2027 ¶ 97 (citing '035 Patent at 4:22-24) ("[E]ach partition is allocated to one of the workstations 58 (workstation A, B, C, and D). These subsets 66, 68, 70 and 72 can only be accessed by the workstation 58")

cited in 1226 POR at 40-41

The Invention Requires the Capability to Provide Different Storage Access to Different Hosts

CRD-5500 Host LUN Mapping

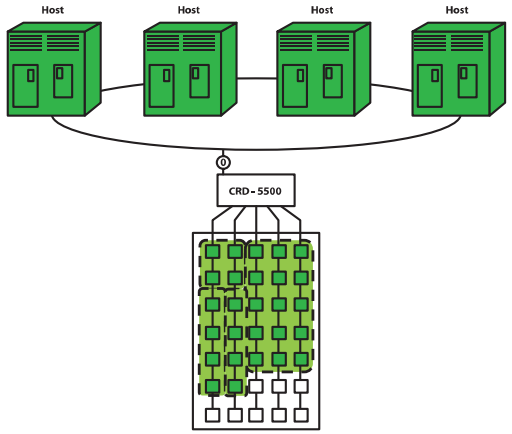

UNITED STATES PATENT AND TRADEMARK OFFICE

BEFORE THE PATENT TRIAL AND APPEAL BOARD

CISCO SYSTEMS, INC. AND QUANTUM CORPORATION
Petitioner,

v.

CROSSROADS SYSTEMS, INC.
Patent O

Case IPR20
Patent No. 6

DECLARATION OF J

1 of 8

The CRD-5500 as shown does not provide any controls that allow the CRD-5500 to limit a particular host's storage access so that each host has access to subsets of storage specified for that host, but not to subsets allocated to other hosts as described in the '035 Patent. Ex. 1001 at 4:30-32; 4:48-54. When all the hosts are connected to one channel, the CRD-5500 ***cannot*** "make a redundancy group visible to one host but not to another."

Ex. 2027 (Levy Decl.) ¶ 91

cited in 1226 POR at 36

Channel Numbers are Not Host Specific Identifiers Such as SCSI ID and AL_PA

Channel Numbers are not Host Identifiers

- Petitioners Assert that Channel Numbers are Representations of a Particular Host, Just Like SCSI ID and AL_PA

BUT

- At any given time, AL_PA (for instance) is a unique identifier for one particular host on a Fibre Channel loop, and can (unlike channel numbers) be used to distinguish between multiple hosts on the same transport medium ('035 Patent at 8:9-11)
- Petitioners admit the claimed storage router uses host identifiers like AL_PA and SCSI ID:

> the
>
> storage router actually represents hosts in the mapping by (i) an ***Arbitrated Loop Physical Address (AL_PA)*** when hosts are connected to the storage router via Fibre Channel (CQ-1025, 124:20-25; 63:9-12; CQ-1001, 7:56-65, 7:10-13) and (ii) a ***SCSI ID*** when hosts are connected to the storage router via a SCSI bus (CQ-1025, 63:13-16, 124:20-125:8; CQ-1001, 6:46-49).
>
> 1226 Reply at 5

A Host Identifier Must Distinguish Between Multiple Hosts on a Bus or Loop

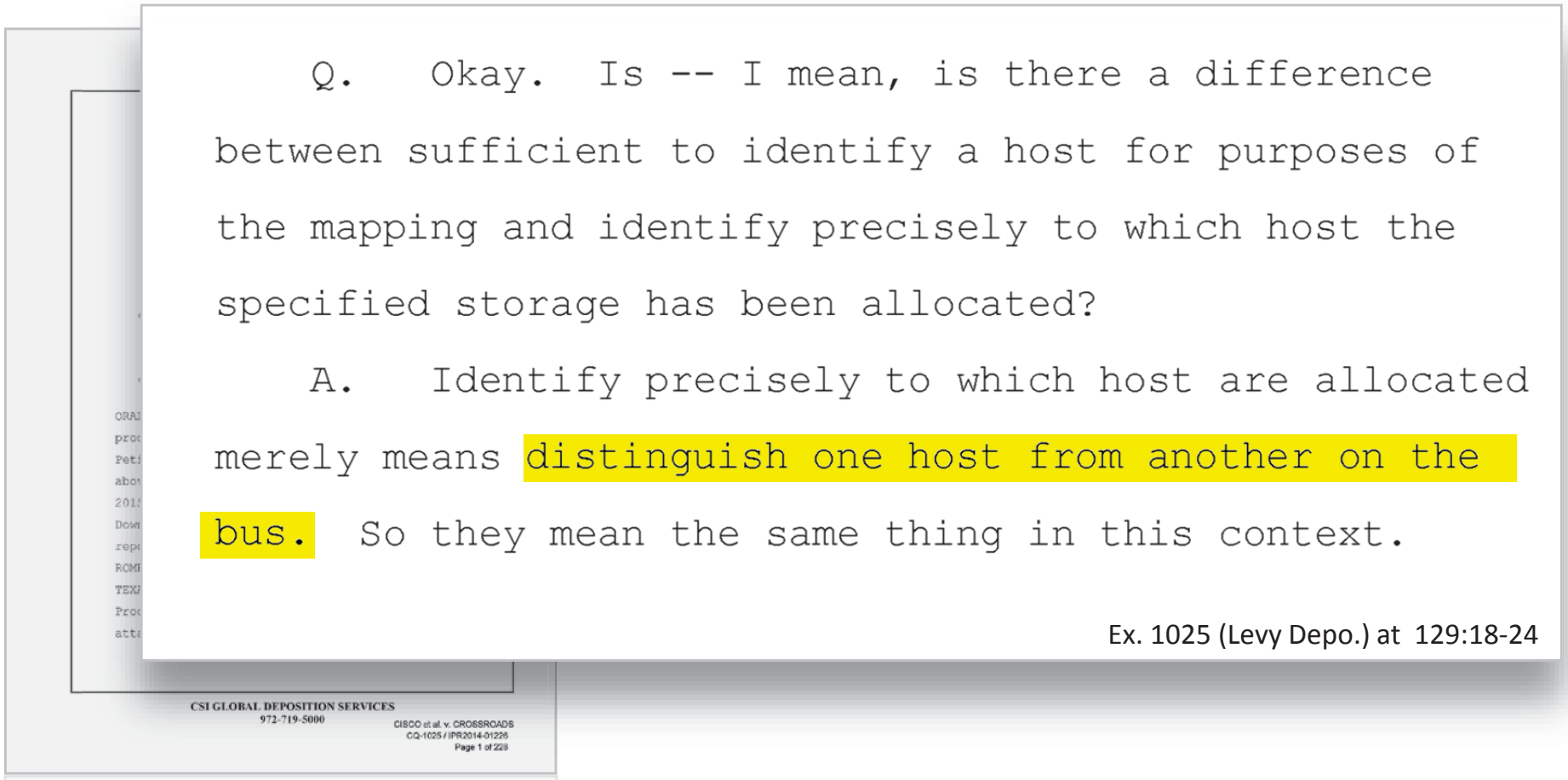

Q. Okay. Is -- I mean, is there a difference between sufficient to identify a host for purposes of the mapping and identify precisely to which host the specified storage has been allocated?

A. Identify precisely to which host are allocated merely means distinguish one host from another on the bus. So they mean the same thing in this context.

Ex. 1025 (Levy Depo.) at 129:18-24

cited in 1226 PO Motion to Exclude at 3-4 (FRE 106)

SCSI ID and AL_PA Always Identify One and Only One Particular Host

"This configuration can be straightforward, and can consist of providing the device a loop-unique ID (AL_PA) in the range of '01h' to 'Efh.'" '035 Pat. 8:9-11

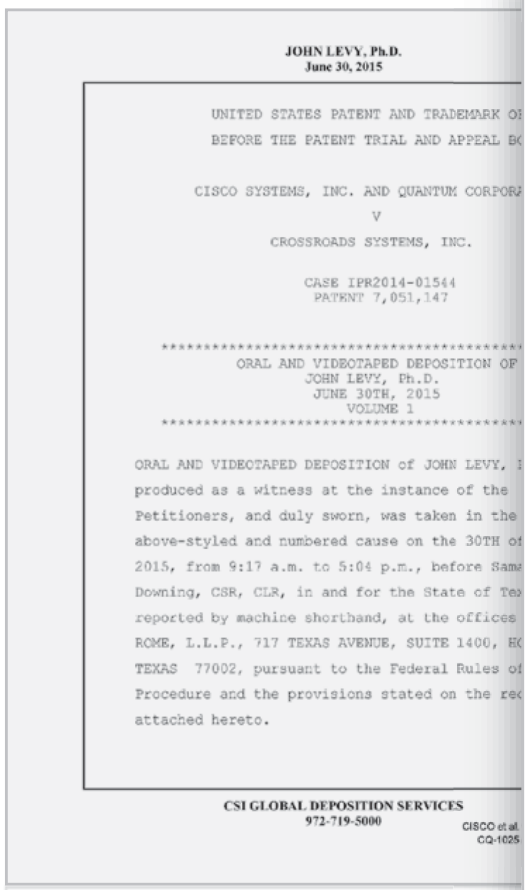

JOHN LEVY, Ph.D.
June 30, 2015

UNITED STATES PATENT AND TRADEMARK O
BEFORE THE PATENT TRIAL AND APPEAL B

CISCO SYSTEMS, INC. AND QUANTUM CORPOR
V
CROSSROADS SYSTEMS, INC.

CASE IPR2014-01544
PATENT 7,051,147

ORAL AND VIDEOTAPED DEPOSITION OF
JOHN LEVY, Ph.D.
JUNE 30TH, 2015
VOLUME 1

ORAL AND VIDEOTAPED DEPOSITION of JOHN LEVY, I
produced as a witness at the instance of the
Petitioners, and duly sworn, was taken in the
above-styled and numbered cause on the 30TH of
2015, from 9:17 a.m. to 5:04 p.m., before Sam
Downing, CSR, CLR, in and for the State of Tex
reported by machine shorthand, at the offices
ROME, L.L.P., 717 TEXAS AVENUE, SUITE 1400, H
TEXAS 77002, pursuant to the Federal Rules of
Procedure and the provisions stated on the rec
attached hereto.

CSI GLOBAL DEPOSITION SERVICES
972-719-5000

CISCO et al.
CQ-1025

Q. And so the -- the AL_PA is not permanently tied to the host system in any given Fibre Channel bus typology; is that correct?

A. Well, let's see.

That's a potentially misleading statement, because, first of all, the AL_PA has to be unique for every active port of the Fibre Channel loop.

In addition, for a -- a Fibre Channel host adapter to be active, it has to be plugged into a system because it has to have power, it has to be managed by something in the host.

And so for the duration of configuring a Fibre Channel arbitrated loop, one can say that the AL_PA is assigned to that port, that card, that host for the duration of its activity.

Ex. 1025 (Levy Depo.) at 109:10-24

1226 Reply at 3-8 (FRE 106)

SCSI ID and AL_PA Always Identify One and Only One Particular Host

A. Well, the statement is misleading because you say any host that has a given SCSI ID. But there can't be more than one host with the same SCSI ID on a SCSI bus. Therefore, the SCSI ID is, in fact, adequate to distinguish a host on a SCSI bus, whereas in the CRD-5500, there is no SCSI ID or host identification mapped. Ex. 1025 (Levy Depo.) at 127:1-20

cited in 1226 PO Motion to Exclude at 5 (FRE 106)

74. There is nothing in the CRD-5500 Manual that indicates that the CRD-5500 can distinguish between devices attached to a host channel. Although the underlying protocol requires that each device on a SCSI bus have its own SCSI ID, there is no teaching in the CRD-5500 as to how the CRD-5500 takes this SCSI ID information into account and certainly no teaching that the CRD-5500 uses this information as part of the "Host LUN Mapping" feature. The CRD-5500 is incapable of providing different storage access to different hosts connected to the CRD-5500 by a common communications link. (1463) Ex. 2027 (Levy Decl.) ¶ 74

cited in 1463 POR at 36

Channel Numbers Cannot Distinguish Between Any Hosts on a Bus or Loop

Channel Numbers Do Not Identify Particular Hosts

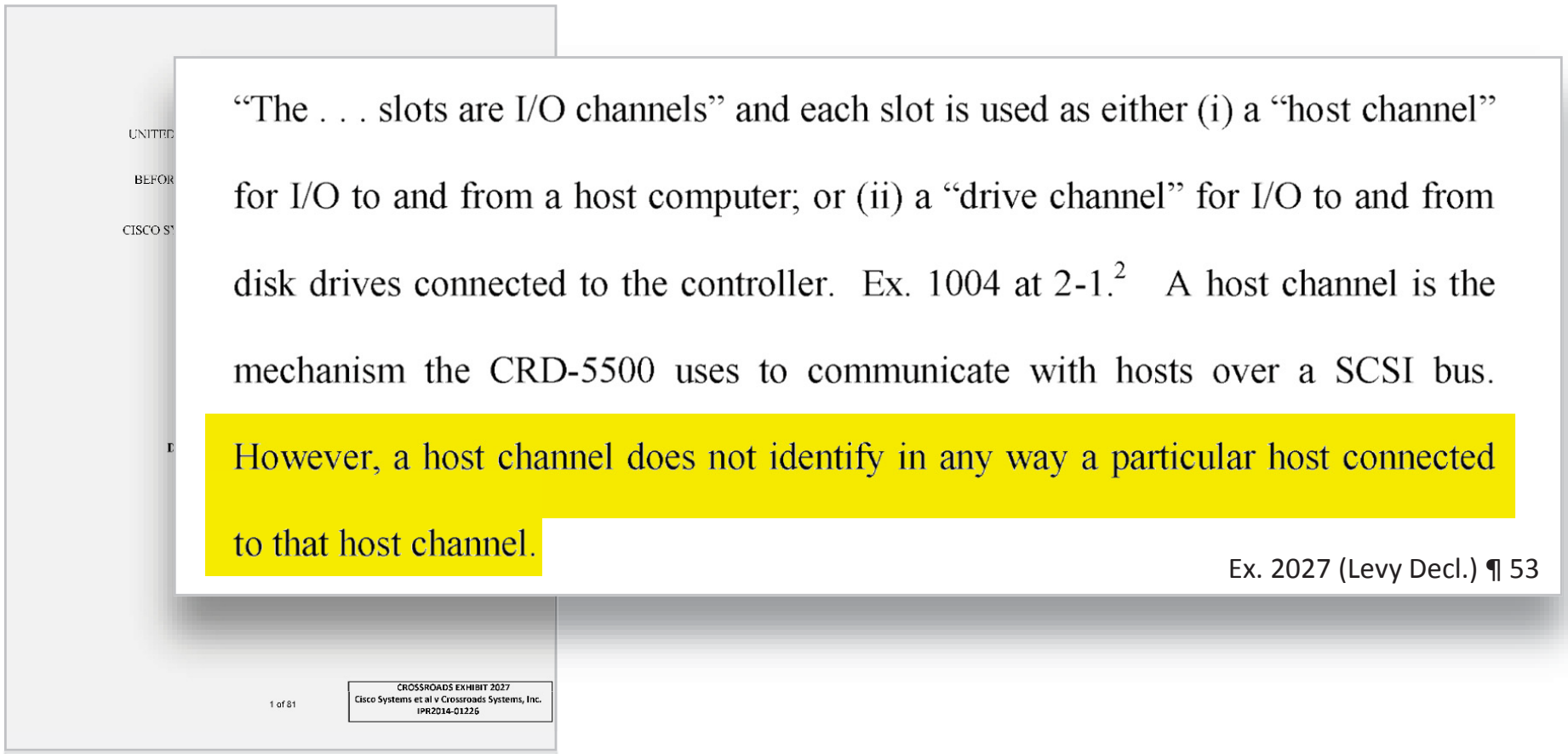

"The . . . slots are I/O channels" and each slot is used as either (i) a "host channel" for I/O to and from a host computer; or (ii) a "drive channel" for I/O to and from disk drives connected to the controller. Ex. 1004 at 2-1.[2] A host channel is the mechanism the CRD-5500 uses to communicate with hosts over a SCSI bus. However, a host channel does not identify in any way a particular host connected to that host channel.

Ex. 2027 (Levy Decl.) ¶ 53

1 of 81

CROSSROADS EXHIBIT 2027
Cisco Systems et al v Crossroads Systems, Inc.
IPR2014-01226

Any Host Connected to a Channel Gets the Same Access as All Hosts Connected to Same Channel

In this example, both hosts (*i.e.*, Host 0 and Host 1) can each access LUN 0 on Channel 0 by sending a request to SCSI ID 0: LUN 0. Thus, each of Host 1 and Host 0 would get identical access to the storage of Redundancy Group 0. The storage access of each host is determined by its physical connection to a channel, not by a map inside the CRD-5500 that assigns storage to specific hosts.

Ex. 2027 (Levy Decl.) ¶ 71

Q. Is there anything in this user manual that talks about making a differentiation between hosts on a given SCSI interface?

A. I have not -- I'm not aware of anything.

Ex. 2028 (Hospodor Depo.) at 195:5-8; see also 194:5-9, 17-22

cited in 1226 POR at 17, 21-22

SCSI ID and AL_PA are Different in Kind from Channel Number

- Whether Temporarily or Permanently Assigned, SCSI ID and AL_PA Are Used to Distinguish Between Hosts on a Bus or Loop
- CRD Channel Numbers Are Not Associated with Hosts at All, But Ports, and Do Not Identify any Host Cabled to the Port
- Channel Numbers Cannot Be Used to Differentiate Between Multiple Hosts on the Same Channel

Petitioners Conflate Cable Swapping with Reassigning Host IDs

2 Types of Physical Reconfigurations

Cable Swapping

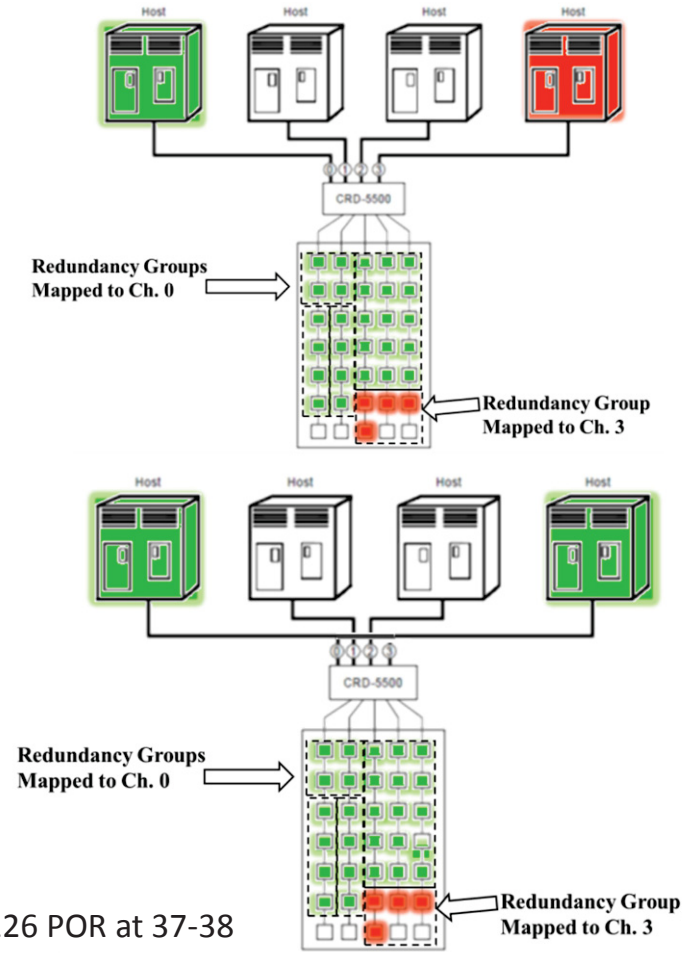

1226 POR at 37-38

Reassigning Host IDs

Administrator assigns same SCSI ID to different computer:

For example, when Dr. Levy was asked about the consequences of reconfiguring Fig. 3 so that "Workstation A" is replaced with a different workstation assigned the same SCSI ID, as discussed above, he acknowledged that the replacement workstation would now be given access to Workstation A's storage…

1226 Reply at 10

The Patents Acknowledge that the Basic Functionality of the Invention is Not Dependent on Permanent Host Identification

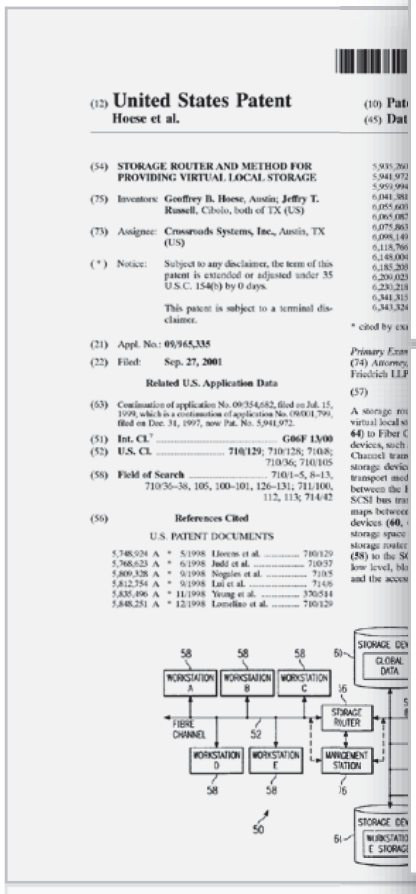

(12) **United States Patent**
Hoese et al.

(54) **STORAGE ROUTER AND METHOD FOR PROVIDING VIRTUAL LOCAL STORAGE**

(75) Inventors: **Geoffrey B. Hoese**, Austin; **Jeffry T. Russell**, Cibolo, both of TX (US)

(73) Assignee: **Crossroads Systems, Inc.**, Austin, TX (US)

(*) Notice: Subject to any disclaimer, the term of this patent is extended or adjusted under 35 U.S.C. 154(b) by 0 days.

This patent is subject to a terminal disclaimer.

(21) Appl. No.: **09/965,335**

(22) Filed: **Sep. 27, 2001**

Related U.S. Application Data

(63) Continuation of application No. 09/354,682, filed on Jul. 15, 1999, which is a continuation of application No. 08/801,799, filed on Dec. 31, 1997, now Pat. No. 5,941,972.

(51) **Int. Cl.**[7] **G06F 13/00**

(52) **U.S. Cl.** **710/129**; 710/128; 710/8; 710/36; 710/105

(58) **Field of Search** 710/1–5, 8–13, 710/35–38, 105, 100–101, 126–131; 711/100, 112, 113; 714/42

(56) **References Cited**

U.S. PATENT DOCUMENTS

5,748,924 A * 5/1998 Llorens et al. 710/129
5,768,623 A * 6/1998 Judd et al. 710/37
5,809,328 A * 9/1998 Nogales et al. 710/5
5,812,754 A * 9/1998 Lui et al. 714/6
5,835,496 A * 11/1998 Yeung et al. 370/514
5,848,251 A * 12/1998 Lomelino et al. 710/129

'035 Patent

This address is generally not guaranteed to be unique between instances. Various scenarios exist where the AL-PA of a device will change, either after power cycle or loop reconfiguration.

'035 Patent 7:62-65

FC ports can be required to have specific addresses assigned. Although basic functionality is not dependent on this, changes in the loop configuration could result in disk targets changing identifiers with the potential risk of data corruption or loss. This configuration can be straightforward, and can consist of providing the device a loop-unique ID (AL_PA) in the range of "01h" to "EFh."

'035 Patent 8:5-11

see 1226 PO Motion to Exclude at 8

The Patent Describes How the System Can Be Configured to Ensure Known Addresses are Always Provided for the Map

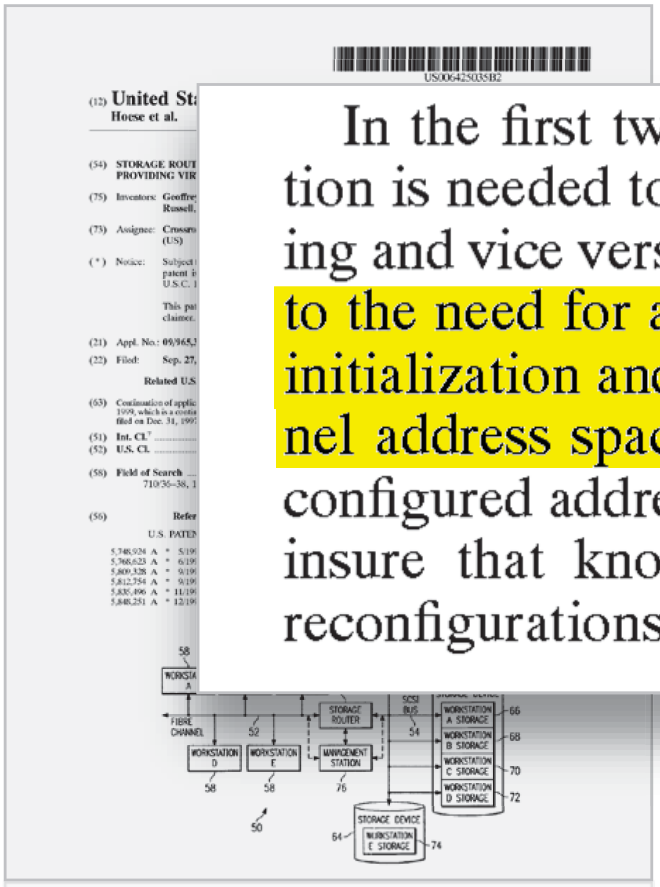

‘035 Patent

In the first two modes of operation, addressing information is needed to map from FC addressing to SCSI addressing and vice versa. This can be ‘hard’ configuration data, due to the need for address information to be maintained across initialization and partial reconfigurations of the Fiber Channel address space. In an arbitrated loop configuration, user configured addresses will be needed for AL_PAs in order to insure that known addresses are provided between loop reconfigurations.

‘035 Patent 7:5-12

See 1226 PO Motion to Exclude at 8 (citing Ex. 1025 (Levy Depo.))

Levy Confirms the Patent Acknowledges that Changes to Host IDs Might Cause Data Corruption or Loss

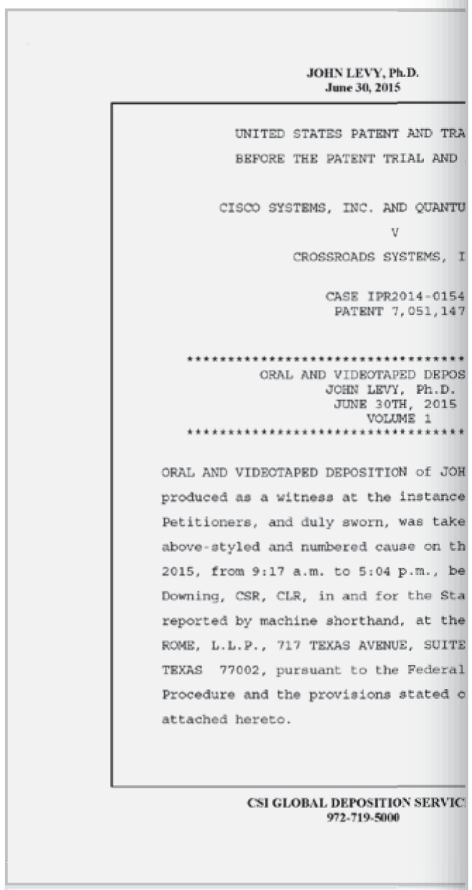

JOHN LEVY, Ph.D.
June 30, 2015

UNITED STATES PATENT AND TRA
BEFORE THE PATENT TRIAL AND

CISCO SYSTEMS, INC. AND QUANTU
V
CROSSROADS SYSTEMS, I

CASE IPR2014-0154
PATENT 7,051,147

ORAL AND VIDEOTAPED DEPOS
JOHN LEVY, Ph.D.
JUNE 30TH, 2015
VOLUME 1

ORAL AND VIDEOTAPED DEPOSITION of JOH
produced as a witness at the instance
Petitioners, and duly sworn, was take
above-styled and numbered cause on th
2015, from 9:17 a.m. to 5:04 p.m., be
Downing, CSR, CLR, in and for the Sta
reported by machine shorthand, at the
ROME, L.L.P., 717 TEXAS AVENUE, SUITE
TEXAS 77002, pursuant to the Federal
Procedure and the provisions stated o
attached hereto.

CSI GLOBAL DEPOSITION SERVIC
972-719-5000

Q. (BY MR. HALL) All right. So zeroing back in on column 7, lines 5 through 12 or 13, what's your understanding of what this portion -- this passage from the specification means?

A. Well, this is discussing how addressing information is to be used in mapping, and the area of interest with regard to the host representation, of course, is the first part of -- it's either Fibre Channel addressing for the host or SCSI addressing for the host.

The point here is that what they call hard configuration data, in order to maintain the address information across initialization of partial reconfigurations, in other words the kinds of things that are discussed later in the columns, there are mechanisms by which the Fibre Channel addresses can be maintained, or a host can request a particular Fibre Channel address. And if those are set up -- presumably the same thing on the SCSI buses, as well. As long as those are set up and the same addresses result after a re-powering -- restart, then there won't be any change in the IDs used to represent hosts on the host side. That's the point of this.

Ex. 1025 (Levy Depo.) at 195:4-196:1

cited in 1226 PO Motion to Exclude at 8 (FRE 106)

Whether Host IDs are "Hard" or "Temporary" the Basic Functionality of the Invention is Met

- The Basic Functionality of the Patent is Still Present Whether Host IDs are "Hard" or "Temporary": the Host IDs refer to a Particular Host. '035 Pat. 8:5-9

- Even if a Power Cycle or Loop Reconfiguration Changes the Host ID, it will Still Meet the Basic Functionality of the Invention ('035 Patent, 7:62-65, 8:9-11).

- The Patent Specifically Envisioned and Discussed Both Temporary and Hard IDs as Part of the Basic Functionality of the Invention. '035 Pat. 8:5-9, 7:1-13, 7:56-65.

- Channel Numbers Never Refer to a Particular Host.

The Claimed Access Controls Use a Host to Storage Map

The invention requires the capability to map different storage to different hosts on the same transport medium (i.e., a common communications link):

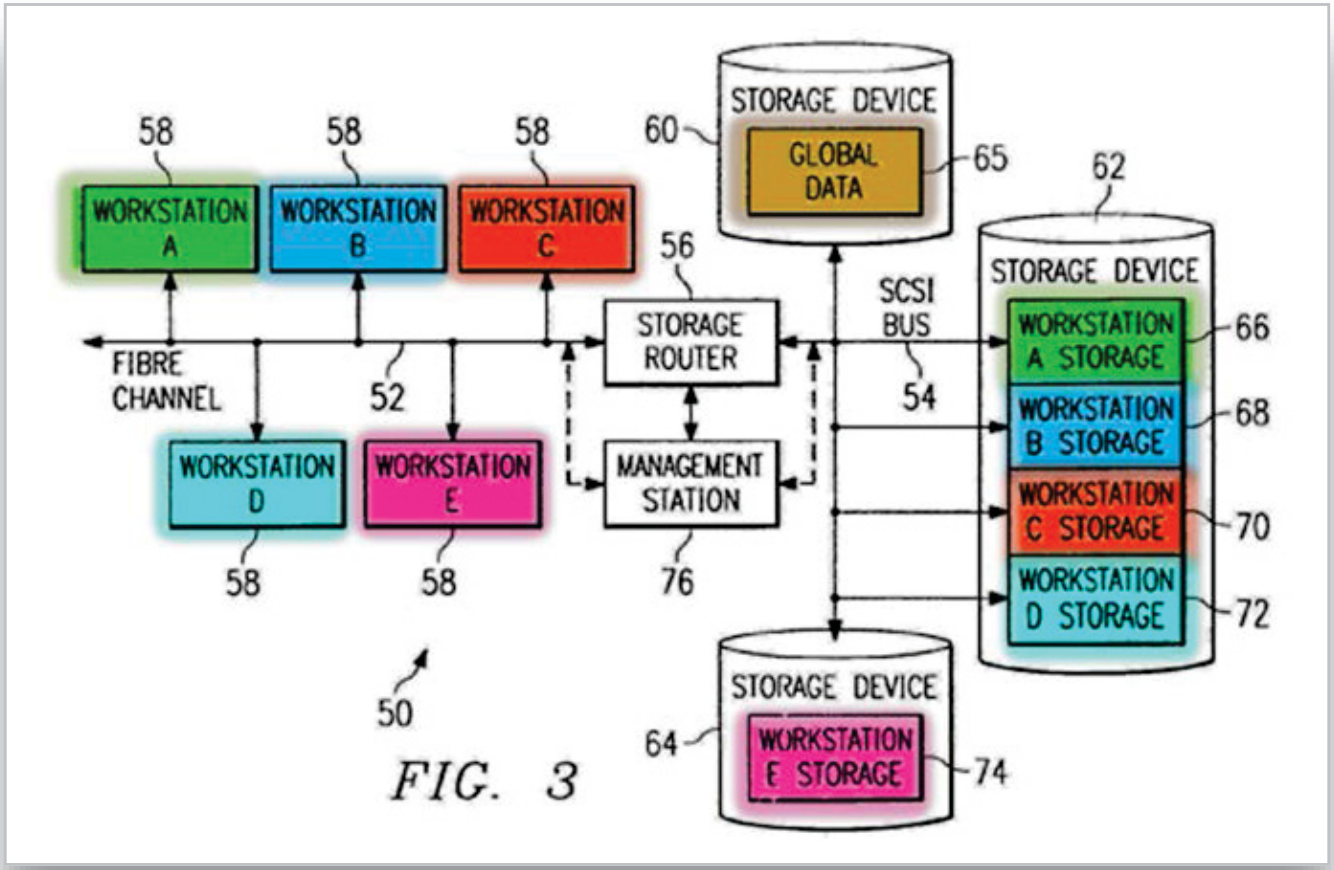

cited in 1226 POR at 8 66

AL_PA is Unique to Devices on a Fibre Channel Loop, and Even if Changed Meet the Basic Functionality of the Invention

- Petitioners state that "a SCSI ID does not intrinsically identify any particular host" and that because an AL_PA may be associated with "a different host after every reconfiguration" it "does not identify any one particular host in [an] intrinsic manner." Reply at 6.

- Merely because SCSI ID and AL_PA do not **permanently** identify a host does not mean they do not always refer to one and only one **particular host** at a time. Motion to Exclude at 3-4, 6-7.

- AL_PA is unique on the Fibre Channel Loop. '035 Patent, 8:9-11

- Even if the AL_PA of a device changes it still meets the basic functionality of the invention. '035 Patent, 7:62-65, 8:5-9.

OBJECTIVE EVIDENCE

Patent Owner Presented Evidence of Commercial Success

- Patent Owner's Evidence Shows Commercial Success is Due to the Claimed Features of Access Controls

- Objective evidence of Non-obviousness Need Only Be Reasonably Commensurate with the Scope of the Claims

Crossroads' Sales Records Show Routers with Access Controls Were Preferred Over Bridges Without Access Controls

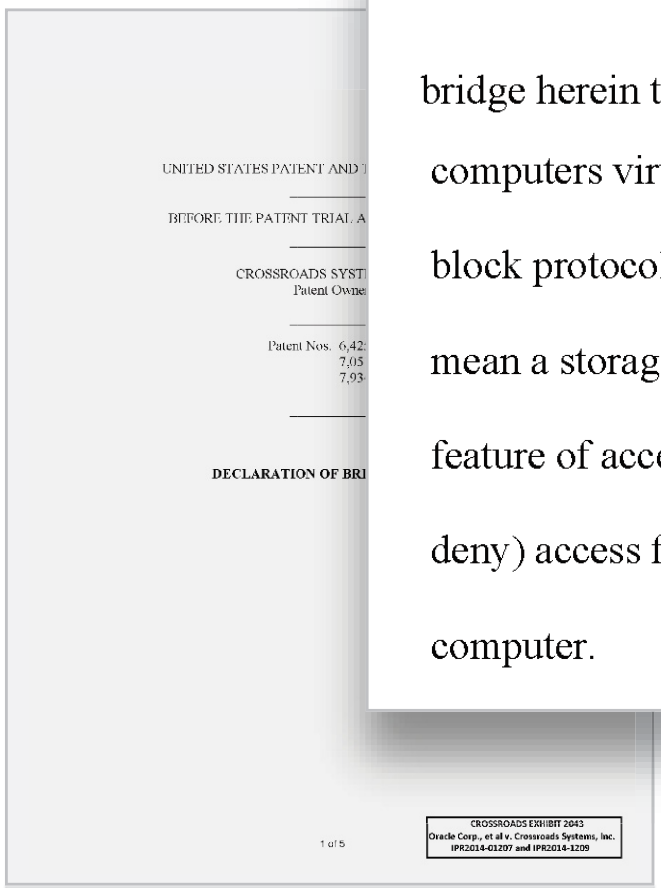
UNITED STATES PATENT AND

BEFORE THE PATENT TRIAL A

CROSSROADS SYST
Patent Owne

Patent Nos. 6,42
7,05
7,93

DECLARATION OF BRI

1 of 5

CROSSROADS EXHIBIT 2043
Oracle Corp., et al v. Crossroads Systems, Inc.
IPR2014-01207 and IPR2014-1209

I am using the term bridge herein to mean a storage appliance that provides one or more host computers virtual local storage on remote storage devices using native, low-level block protocols, but without access controls. I am using the term router herein to mean a storage appliance with the same features as a bridge, but with the additional feature of access controls. By access controls I mean the ability to control (allow or deny) access from a host computer to the same storage available to another host computer.

Ex. 2043 (Bianchi Decl.) ¶ 2

cited in 1226 POR at 52-53

Crossroads' Sales Records Show Routers with Access Controls Were Preferred Over Bridges Without Access Controls

CROSSROADS
BRIDGE AND ROUTER REVENUE

Product Name/Description	Bridge or Router	FY'05	FY'06	FY'07	FY'08	FY'09	FY'10
4100	Bridge	0	2,070	0	0	0	0
4150	Router	0	0	0	0	0	0
4200	Bridge	0	0	0	0	0	0
4250	Router	2,000	0	0	0	0	0
4350	Router	0	0	0	0	0	0
4400	Bridge	0	0	0	0	0	0
4450	Router	0	0	8,000	0	0	0
6000							
6000-Router	Router	3,413,703	1,589,403	842,064	677,220	488,720	229531
6000-b	Bridge	0	15,360	12,800	2,560	2,560	0
6240							
6240-Router	Router	195,226	142,596	106,332	84,081	42,023	16007
6240-b	Bridge	0	0	16,800	16,800	0	0
240f DataMover	Router	6,995	0	0	0	0	0
Brumbies	Router	0	(1,185)	0	0	0	0
Embedded Routers	Router	2,213,825	3,295,862	1,240,680	0	0	0
8000	Router	0	0	0	0	0	0
10000	Router	2,806,505	878,851	0	0	8,474	0
Server Attach	Router	230,531	160,218	226,940	69,400	58,762	71300
Ranger in a box (RIB)							
7120-Router	Router	0	644,394	1,053,979	688,907	182,009	74568
7120-b	Bridge	0	0	14,550	2,910	0	2910
Achenar	Router	5,080,141	2,177,395	(106,590)	0	0	0
Ranger	Router	0	1,680,690	2,243,520	1,999,560	776,910	614910
yager No Access Controls	Bridge	2,091,800	1,558,200	2,075,500	782,570	404,490	62550
Voyager with Access Controls	Router	865,400	631,400	1,180,221	1,129,749	846,403	615457
Total		$16,906,126	$12,775,254	$8,914,796	$5,453,757	$2,810,351	$1,687,233
Total Bridges		$2,091,800	$1,575,630	$2,119,650	$804,840	$407,050	$65,460
Total Routers		$14,814,326	$11,199,624	$6,795,146	$4,648,917	$2,403,301	$1,621,773

CROSSROADS
BRIDGE AND ROUTER SHIPMENTS

Product Name/Description	Bridge or Router	FY'07	FY'08	FY'09	FY'10
4100	Bridge	0	0	0	0
4150	Router	0	0	0	0
4200	Bridge	0	0	0	0
4250	Router	1	0	0	0
4350	Router	0	0	0	0
4400	Bridge	0	0	0	0
4450	Router	2	0	0	0
6000					
6000-Router	Router	188	159	172	44
6000-b	Bridge	5	1	1	0
6240					
6240-Router	Router	21	15	7	3
6240-b	Bridge	4	4	0	0
240f DataMover	Router	0	0	0	0
Brumbies	Router	0	0	0	0
Embedded Routers	Router	211	0	0	0
8000	Router	0	0	0	0
10000	Router	0	0	2	0
Server Attach	Router	48	18	12	15
Ranger in a box (RIB)					
7120-Router	Router	443	302	82	33
7120-b	Bridge	5	1	0	1
Achenar	Router	(187)	0	0	0
Ranger	Router	3,936	3,508	1,363	1,118
Voyager No Access Controls	Bridge	2,422	535	183	(261)
Voyager with Access Controls	Router	543	591	399	351
Total		7,642	5,134	2,221	1,304
Total Bridges		2,436	541	184	(260)
Total Routers		5,206	4,593	2,037	1,564

Ex. 2044 (Bianchi Decl.) at 3,5

cited in 1226 POR at 52-53

The Nexus Requirement Does Not Require Patent Licenses to Recite Claim Limitations

- Petitioners' Position Would Effectively Require Licenses to Recite Particular Claims or Claim Limitations (1226 Reply at 24).
- Crossroads' Licenses Specify the Patent Family at Issue
- Requiring Licenses to Recite Claims instead of Patent Families Ignores the Real World and Would Mean Licenses Can Never Be Used as Objective Evidence
- Crossroads' Licensing Program as a Whole, Including Non-Litigation Related Licenses, indicates the Invention was Non-Obvious

cited in 1226 POR at 54-55

Claim 1 U.S. Patent Number 6,425,035 B2

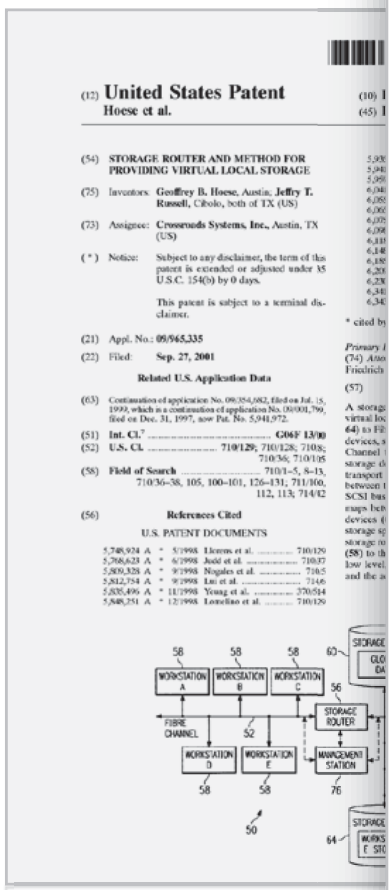

(12) **United States Patent**
Hoese et al.

(54) **STORAGE ROUTER AND METHOD FOR PROVIDING VIRTUAL LOCAL STORAGE**

(75) Inventors: **Geoffrey B. Hoese**, Austin; **Jeffry T. Russell**, Cibolo, both of TX (US)

(73) Assignee: **Crossroads Systems, Inc.**, Austin, TX (US)

(*) Notice: Subject to any disclaimer, the term of this patent is extended or adjusted under 35 U.S.C. 154(b) by 0 days.

This patent is subject to a terminal disclaimer.

(21) Appl. No.: **09/965,335**

(22) Filed: **Sep. 27, 2001**

Related U.S. Application Data

(63) Continuation of application No. 09/354,682, filed on Jul. 15, 1999, which is a continuation of application No. 08/901,799, filed on Dec. 31, 1997, now Pat. No. 5,941,972.

(51) **Int. Cl.**[7] **G06F 13/00**

(52) **U.S. Cl.** **710/129**; 710/128; 710/8; 710/36; 710/105

(58) **Field of Search** 710/1–5, 8–13, 710/36–38, 105, 100–101, 126–131; 711/100, 112, 113; 714/42

(56) **References Cited**

U.S. PATENT DOCUMENTS

5,748,924 A * 5/1998 Llorens et al. 710/129
5,768,623 A * 6/1998 Judd et al. 710/37
5,859,328 A * 9/1998 Nogales et al. 710/5
5,812,754 A * 9/1998 Lui et al. 714/6
5,835,496 A * 11/1998 Yeung et al. 370/514
5,848,251 A * 12/1998 Lomelino et al. 710/129

1. A storage router for providing virtual local storage on remote storage devices to devices, comprising:

a buffer providing memory work space for the storage router;

a first controller operable to connect to and interface with a first transport medium;

a second controller operable to connect to and interface with a second transport medium; and

a supervisor unit coupled to the first controller, the second controller and the buffer, the supervisor unit operable to map between devices connected to the first transport medium and the storage devices, to implement access controls for storage space on the storage devices and to process data in the buffer to interface between the first controller and the second controller to allow access from devices connected to the first transport medium to the storage devices using native low level, block protocols.

Claim 2 U.S. Patent Number 6,425,035 B2

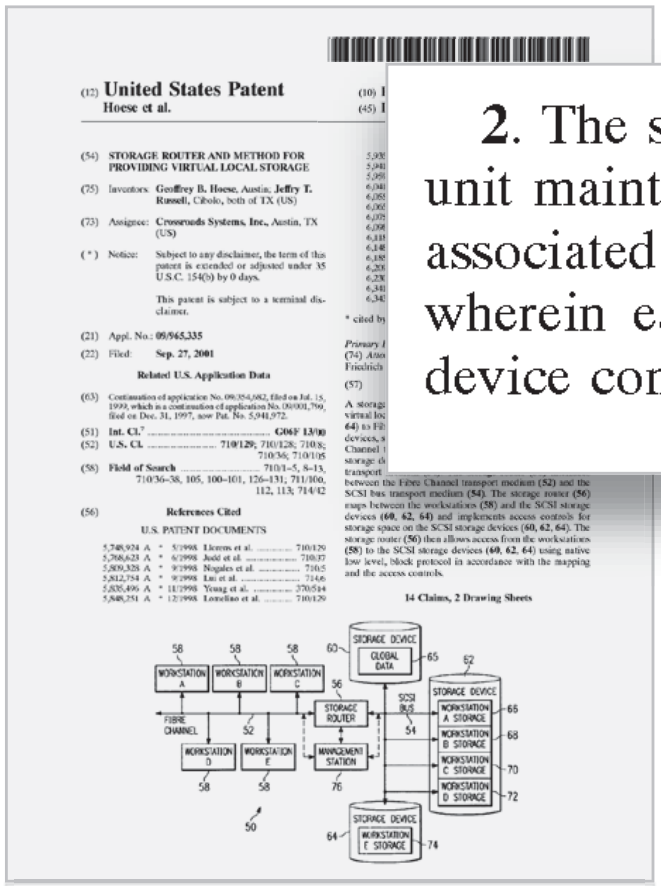
(12) United States Patent
Hoese et al.

(54) STORAGE ROUTER AND METHOD FOR PROVIDING VIRTUAL LOCAL STORAGE

(75) Inventors: Geoffrey B. Hoese, Austin; Jeffry T. Russell, Cibolo, both of TX (US)

(73) Assignee: Crossroads Systems, Inc., Austin, TX (US)

(*) Notice: Subject to any disclaimer, the term of this patent is extended or adjusted under 35 U.S.C. 154(b) by 0 days.

This patent is subject to a terminal disclaimer.

(21) Appl. No.: 09/965,335

(22) Filed: Sep. 27, 2001

Related U.S. Application Data

(63) Continuation of application No. 09/354,982, filed on Jul. 15, 1999, which is a continuation of application No. 09/001,799, filed on Dec. 31, 1997, now Pat. No. 5,941,972.

(51) Int. Cl.[7] G06F 13/00

(52) U.S. Cl. 710/129; 710/128; 710/8; 710/36; 710/105

(58) Field of Search 710/1–5, 8–13, 710/36–38, 105, 100–101, 126–131; 711/100, 112, 113; 714/42

(56) References Cited

U.S. PATENT DOCUMENTS

5,748,924 A * 5/1998 Llorens et al. 710/129
5,768,623 A * 6/1998 Judd et al. 710/37
5,809,328 A * 9/1998 Nogales et al. 710/5
5,812,754 A * 9/1998 Lui et al. 714/6
5,835,496 A * 11/1998 Yeung et al. 370/514
5,848,251 A * 12/1998 Lomelino et al. 710/129

14 Claims, 2 Drawing Sheets

2. The storage router of claim **1**, wherein the supervisor unit maintains an allocation of subsets of storage space to associated devices connected to the first transport medium, wherein each subset is only accessible by the associated device connected to the first transport medium.

Claim 8 U.S. Patent Number 6,425,035 B2

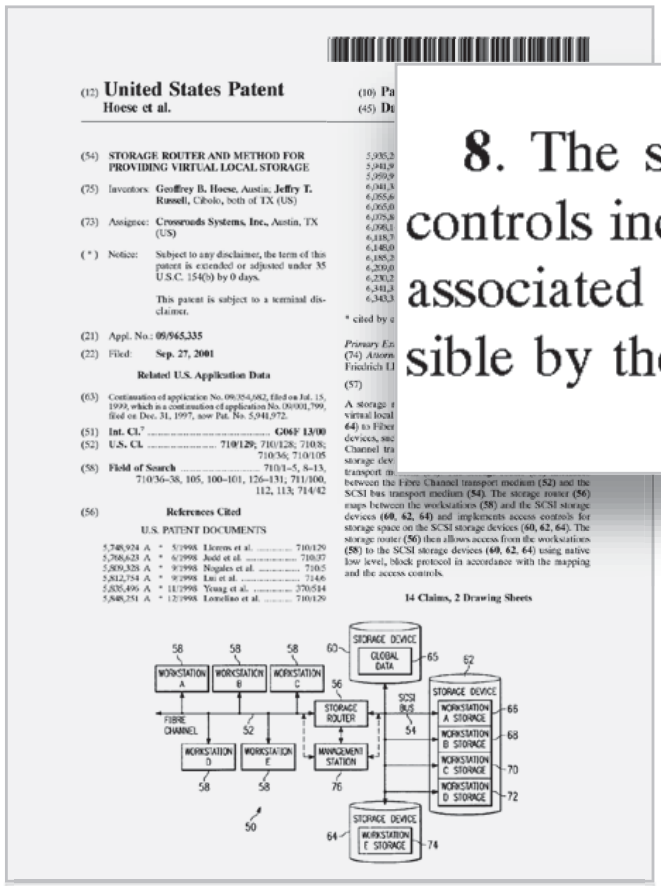

(12) **United States Patent**
Hoese et al.

(10) Pa
(45) Da

(54) **STORAGE ROUTER AND METHOD FOR PROVIDING VIRTUAL LOCAL STORAGE**

(75) Inventors: **Geoffrey B. Hoese**, Austin; **Jeffry T. Russell**, Cibolo, both of TX (US)

(73) Assignee: **Crossroads Systems, Inc.**, Austin, TX (US)

(*) Notice: Subject to any disclaimer, the term of this patent is extended or adjusted under 35 U.S.C. 154(b) by 0 days.

This patent is subject to a terminal disclaimer.

(21) Appl. No.: **09/965,335**

(22) Filed: **Sep. 27, 2001**

Related U.S. Application Data

(63) Continuation of application No. 09/354,682, filed on Jul. 15, 1999, which is a continuation of application No. 08/801,799, filed on Dec. 31, 1997, now Pat. No. 5,941,972.

(51) **Int. Cl.**[7] **G06F 13/00**

(52) **U.S. Cl.** **710/129**; 710/128; 710/3; 710/36; 710/105

(58) **Field of Search** 710/1–5, 8–13, 710/36–38, 105, 100–101, 126–131; 711/100, 112, 113; 714/42

(56) **References Cited**

U.S. PATENT DOCUMENTS

5,748,924 A * 5/1998 Llorens et al. 710/129
5,768,623 A * 6/1998 Judd et al. 710/37
5,859,328 A * 9/1998 Nogales et al. 710/5
5,812,754 A * 9/1998 Lui et al. 714/6
5,835,496 A * 11/1998 Yeung et al. 370/534
5,848,251 A * 12/1998 Lomelino et al. 710/129

14 Claims, 2 Drawing Sheets

8. The storage network of claim **7**, wherein the access controls include an allocation of subsets of storage space to associated workstations, wherein each subset is only accessible by the associated workstation.

Claim 11 U.S. Patent Number 6,425,035 B2

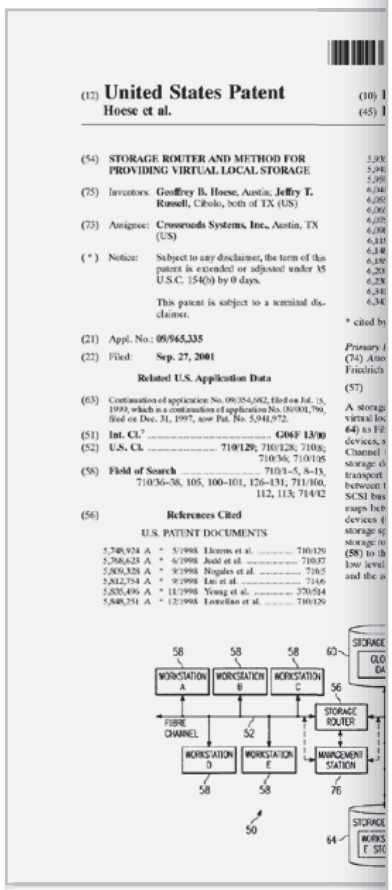

(12) **United States Patent**
Hoese et al.

(54) **STORAGE ROUTER AND METHOD FOR PROVIDING VIRTUAL LOCAL STORAGE**

(75) Inventors: **Geoffrey B. Hoese**, Austin; **Jeffry T. Russell**, Cibolo, both of TX (US)

(73) Assignee: **Crossroads Systems, Inc.**, Austin, TX (US)

(*) Notice: Subject to any disclaimer, the term of this patent is extended or adjusted under 35 U.S.C. 154(b) by 0 days.

This patent is subject to a terminal disclaimer.

(21) Appl. No.: **09/965,335**

(22) Filed: **Sep. 27, 2001**

Related U.S. Application Data

(63) Continuation of application No. 09/354,682, filed on Jul. 15, 1999, which is a continuation of application No. 08/801,799, filed on Dec. 31, 1997, now Pat. No. 5,941,972.

(51) **Int. Cl.**[7] **G06F 13/00**

(52) **U.S. Cl.** **710/129**; 710/128; 710/5; 710/36; 710/105

(58) **Field of Search** 710/1–5, 8–13, 710/36–38, 105, 100–101, 126–131; 711/100, 112, 113; 714/42

(56) **References Cited**

U.S. PATENT DOCUMENTS

5,748,924 A * 5/1998 Llorens et al. 710/129
5,768,623 A * 6/1998 Judd et al. 710/37
5,859,328 A * 9/1998 Nogales et al. 710/5
5,812,754 A * 9/1998 Lui et al. 714/6
5,835,496 A * 11/1998 Yeung et al. 370/514
5,848,251 A * 12/1998 Lomelino et al. 710/129

11. A method for providing virtual local storage on remote storage devices connected to one transport medium to devices connected to another transport medium, comprising:

interfacing with a first transport medium;

interfacing with a second transport medium;

mapping between devices connected to the first transport medium and the storage devices and that implements access controls for storage space on the storage devices; and

allowing access from devices connected to the first transport medium to the storage devices using native low level, block protocols.

Claim 12 U.S. Patent Number 6,425,035 B2

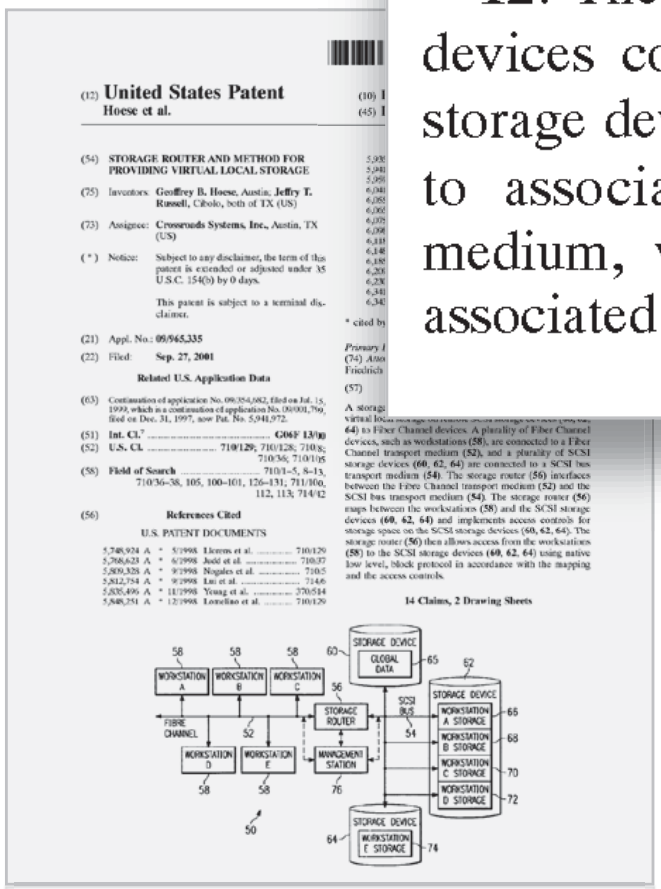
(12) United States Patent
Hoese et al.

(54) STORAGE ROUTER AND METHOD FOR PROVIDING VIRTUAL LOCAL STORAGE

(75) Inventors: Geoffrey B. Hoese, Austin; Jeffry T. Russell, Cibolo, both of TX (US)

(73) Assignee: Crossroads Systems, Inc., Austin, TX (US)

(*) Notice: Subject to any disclaimer, the term of this patent is extended or adjusted under 35 U.S.C. 154(b) by 0 days.

This patent is subject to a terminal disclaimer.

(21) Appl. No.: 09/965,335

(22) Filed: Sep. 27, 2001

Related U.S. Application Data

(63) Continuation of application No. 09/354,982, filed on Jul. 15, 1999, which is a continuation of application No. 09/001,769, filed on Dec. 31, 1997, now Pat. No. 5,941,972.

(51) Int. Cl.[7] G06F 13/00

(52) U.S. Cl. 710/129; 710/128; 710/8; 710/36; 710/105

(58) Field of Search 710/1–5, 8–13, 710/36–38, 105, 100–101, 126–131; 711/100, 112, 113; 714/42

(56) References Cited

U.S. PATENT DOCUMENTS

5,748,924 A * 5/1998 Llorens et al. 710/129
5,768,623 A * 6/1998 Judd et al. 710/37
5,809,328 A * 9/1998 Nogales et al. 710/5
5,812,754 A * 9/1998 Lui et al. 714/6
5,835,496 A * 11/1998 Yeung et al. 370/514
5,848,251 A * 12/1998 Lomelino et al. 710/129

14 Claims, 2 Drawing Sheets

12. The method of claim **11**, wherein mapping between devices connected to the first transport medium and the storage devices includes allocating subsets of storage space to associated devices connected to the first transport medium, wherein each subset is only accessible by the associated device connected to the first transport medium.

Claim 1 U.S. Patent Number 7,051,147 B2

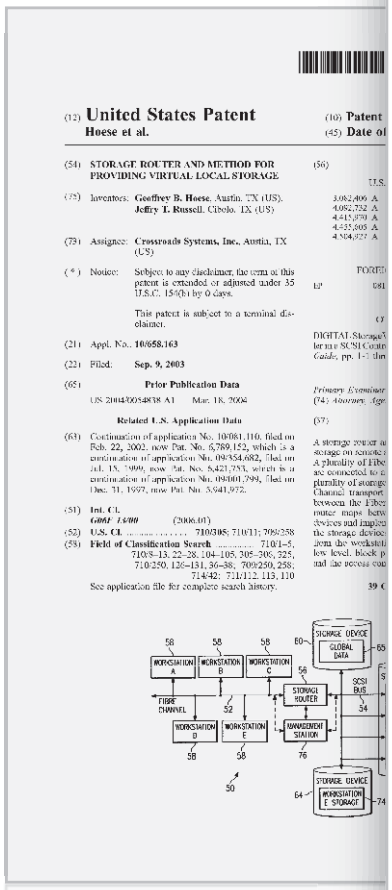

1. A storage router for providing virtual local storage on remote storage devices to a device, comprising:

a buffer providing memory work space for the storage router;

a first Fibre Channel controller operable to connect to and interface with a first Fibre Channel transport medium;

a second Fibre Channel controller operable to connect to and interface with a second Fibre Channel transport medium; and

a supervisor unit coupled to the first and second Fibre Channel controllers and the buffer, the supervisor unit operable:

to maintain a configuration for remote storage devices connected to the second Fibre Channel transport medium that maps between the device and the remote storage devices and that implements access controls for storage space on the remote storage devices; and

to process data in the buffer to interface between the first Fibre Channel controller and the second Fibre Channel controller to allow access from Fibre Channel initiator devices to the remote storage devices using native low level, block protocol in accordance with the configuration.

Claim 2 U.S. Patent Number 7,051,147 B2

2. The storage router of claim **1**, wherein the configuration maintained by the supervisor unit includes an allocation of subsets of storage space to associated Fibre Channel devices, wherein each subset is only accessible by the associated Fibre Channel device.

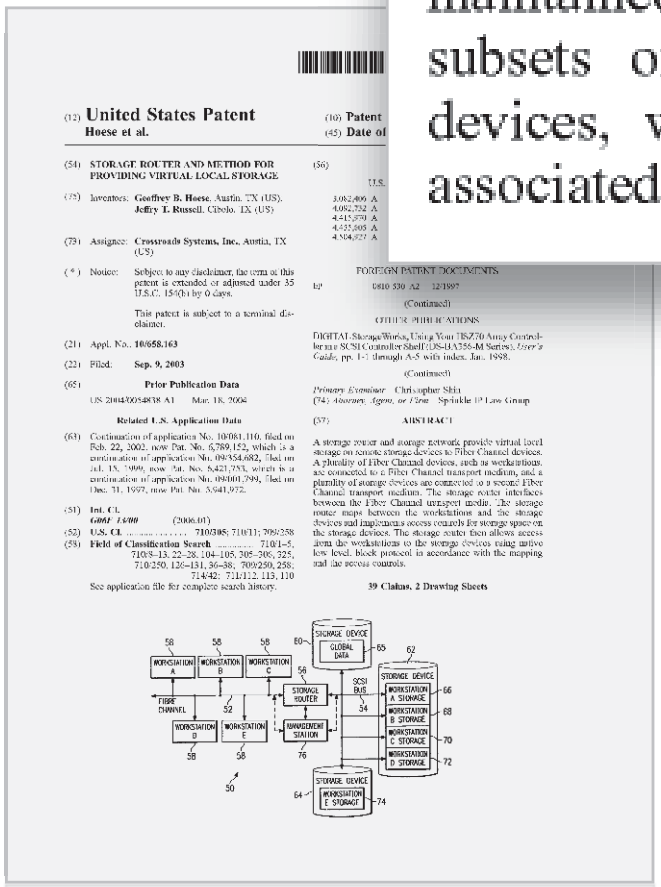

(12) **United States Patent**
Hoese et al.

(10) Patent
(45) Date of

(54) **STORAGE ROUTER AND METHOD FOR PROVIDING VIRTUAL LOCAL STORAGE**

(75) Inventors: **Geoffrey B. Hoese**, Austin, TX (US); **Jeffry T. Russell**, Cibolo, TX (US)

(73) Assignee: **Crossroads Systems, Inc.**, Austin, TX (US)

(*) Notice: Subject to any disclaimer, the term of this patent is extended or adjusted under 35 U.S.C. 154(b) by 0 days.

This patent is subject to a terminal disclaimer.

(21) Appl. No.: **10/658,163**

(22) Filed: **Sep. 9, 2003**

(65) **Prior Publication Data**

US 2004/0054838 A1 Mar. 18, 2004

Related U.S. Application Data

(63) Continuation of application No. 10/081,110, filed on Feb. 22, 2002, now Pat. No. 6,789,152, which is a continuation of application No. 09/354,682, filed on Jul. 15, 1999, now Pat. No. 6,421,753, which is a continuation of application No. 08/801,799, filed on Dec. 31, 1997, now Pat. No. 5,941,972.

(51) **Int. Cl.**
G06F 13/00 (2006.01)

(52) **U.S. Cl.** 710/305; 710/11; 709/258

(58) **Field of Classification Search** 710/1–5, 710/8–13, 22–28, 104–105, 305–306, 225, 710/250, 126–131, 36–38; 709/250, 258; 714/42; 711/112, 113, 110

See application file for complete search history.

(56)

U.S.

3,082,409 A
4,092,732 A
4,415,970 A
4,455,605 A
4,504,927 A

FOREIGN PATENT DOCUMENTS

EP 0810 530 A2 12/1997

(Continued)

OTHER PUBLICATIONS

DIGITAL StorageWorks, Using Your HSZ70 Array Controller in the SCSI Controller Shelf (DS-BA356-M Series), *User's Guide*, pp. 1-1 through A-5 with index, Jan. 1998.

(Continued)

Primary Examiner Christopher Shin
(74) *Attorney, Agent, or Firm* Sprinkle IP Law Group

(57) **ABSTRACT**

A storage router and storage network provide virtual local storage on remote storage devices to Fiber Channel devices. A plurality of Fiber Channel devices, such as workstations, are connected to a Fiber Channel transport medium, and a plurality of storage devices are connected to a second Fiber Channel transport medium. The storage router interfaces between the Fiber Channel transport media. The storage router maps between the workstations and the storage devices and implements access controls for storage space on the storage devices. The storage router then allows access from the workstations to the storage devices using native low level block protocol in accordance with the mapping and the access controls.

39 Claims, 2 Drawing Sheets

Claim 7 U.S. Patent Number 7,051,147 B2

7. The storage network of claim 6, wherein the access controls include an allocation of subsets of storage space to associated workstations, wherein each subset is only accessible by the associated workstation.

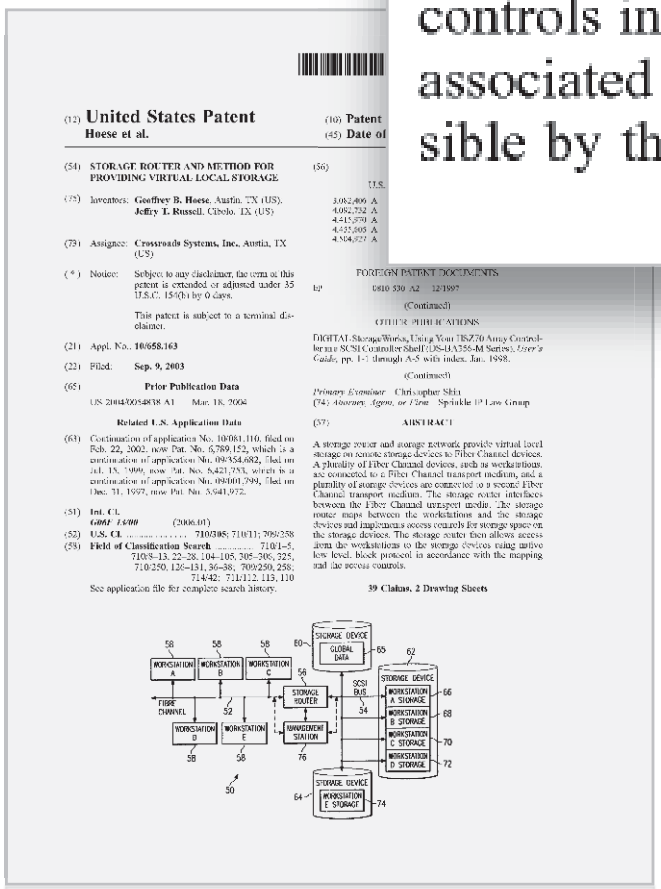

(12) **United States Patent**
Hoese et al.

(10) **Patent**
(45) **Date of**

(54) **STORAGE ROUTER AND METHOD FOR PROVIDING VIRTUAL LOCAL STORAGE**

(75) Inventors: **Geoffrey B. Hoese**, Austin, TX (US); **Jeffry T. Russell**, Cibolo, TX (US)

(73) Assignee: **Crossroads Systems, Inc.**, Austin, TX (US)

(*) Notice: Subject to any disclaimer, the term of this patent is extended or adjusted under 35 U.S.C. 154(b) by 0 days.

This patent is subject to a terminal disclaimer.

(21) Appl. No.: **10/658,163**

(22) Filed: **Sep. 9, 2003**

(65) **Prior Publication Data**

US 2004/0054838 A1 Mar. 18, 2004

Related U.S. Application Data

(63) Continuation of application No. 10/081,110, filed on Feb. 22, 2002, now Pat. No. 6,789,152, which is a continuation of application No. 09/354,682, filed on Jul. 15, 1999, now Pat. No. 6,421,753, which is a continuation of application No. 08/801,799, filed on Dec. 31, 1997, now Pat. No. 5,941,972.

(51) **Int. Cl.**
G06F 13/00 (2006.01)

(52) **U.S. Cl.** **710/305**; 710/11; 709/258

(58) **Field of Classification Search** 710/1–5, 710/8–13, 22–28, 104–105, 305–306, 225, 710/250, 126–131, 36–38; 709/250, 258; 714/42; 711/112, 113, 110

See application file for complete search history.

(56)

U.S.

3,082,409 A
4,092,732 A
4,415,970 A
4,452,005 A
4,504,927 A

FOREIGN PATENT DOCUMENTS

EP 0810 530 A2 12/1997

(Continued)

OTHER PUBLICATIONS

DIGITAL StorageWorks, Using Your HSZ70 Array Controller in the SCSI Controller Shelf (DS-BA356-M Series), *User's Guide*, pp. 1-1 through A-5 with index, Jan. 1998.

(Continued)

Primary Examiner Christopher Shin
(74) *Attorney, Agent, or Firm* Sprinkle IP Law Group

(57) **ABSTRACT**

A storage router and storage network provide virtual local storage on remote storage devices to Fiber Channel devices. A plurality of Fiber Channel devices, such as workstations, are connected to a Fiber Channel transport medium, and a plurality of storage devices are connected to a second Fiber Channel transport medium. The storage router interfaces between the Fiber Channel transport media. The storage router maps between the workstations and the storage devices and implements access controls for storage space on the storage devices. The storage router then allows access from the workstations to the storage devices using native low level, block protocol in accordance with the mapping and the access controls.

39 Claims, 2 Drawing Sheets

Claim 10 U.S. Patent Number 7,051,147 B2

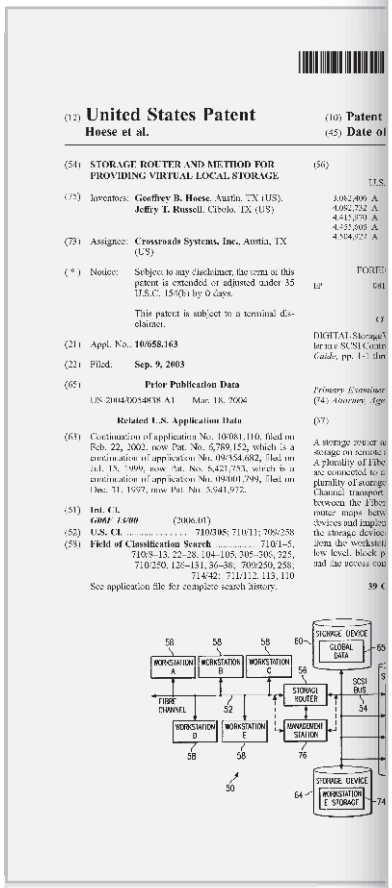

(12) **United States Patent**
Hoese et al.

(10) **Patent**
(45) **Date of**

(54) **STORAGE ROUTER AND METHOD FOR PROVIDING VIRTUAL LOCAL STORAGE**

(56)

(75) Inventors: **Geoffrey B. Hoese**, Austin, TX (US); **Jeffry T. Russell**, Cibolo, TX (US)

(73) Assignee: **Crossroads Systems, Inc.**, Austin, TX (US)

(*) Notice: Subject to any disclaimer, the term of this patent is extended or adjusted under 35 U.S.C. 154(b) by 0 days.

This patent is subject to a terminal disclaimer.

(21) Appl. No.: **10/658,163**

(22) Filed: **Sep. 9, 2003**

(65) **Prior Publication Data**

US 2004/0054838 A1 Mar. 18, 2004

Related U.S. Application Data

(63) Continuation of application No. 10/081,110, filed on Feb. 22, 2002, now Pat. No. 6,789,152, which is a continuation of application No. 09/354,682, filed on Jul. 15, 1999, now Pat. No. 6,421,753, which is a continuation of application No. 08/801,799, filed on Dec. 31, 1997, now Pat. No. 5,941,972.

(51) **Int. Cl.**
G06F 13/00 (2006.01)

(52) **U.S. Cl.** 710/305; 710/11; 709/258

(58) **Field of Classification Search** 710/1–5, 710/8–13, 22–28, 104–105, 305–306, 225, 710/250, 126–131, 36–38; 709/250, 258; 714/42; 711/112, 113, 110

See application file for complete search history.

10. A method for providing virtual local storage on remote storage devices to Fibre Channel devices, comprising:

interfacing with a first Fibre Channel transport medium;

interfacing with a second Fibre Channel transport medium;

maintaining a configuration for remote storage devices connected to the second Fibre Channel transport medium that maps between Fibre Channel devices and the remote storage devices and that implements access controls for storage space on the remote storage devices; and

allowing access from Fibre Channel initiator devices to the remote storage devices using native low level, block protocol in accordance with the configuration.

Claim 11 U.S. Patent Number 7,051,147 B2

11. The method of claim **10**, wherein maintaining the configuration includes allocating subsets of storage space to associated Fibre Channel devices, wherein each subset is only accessible by the associated Fibre Channel device.

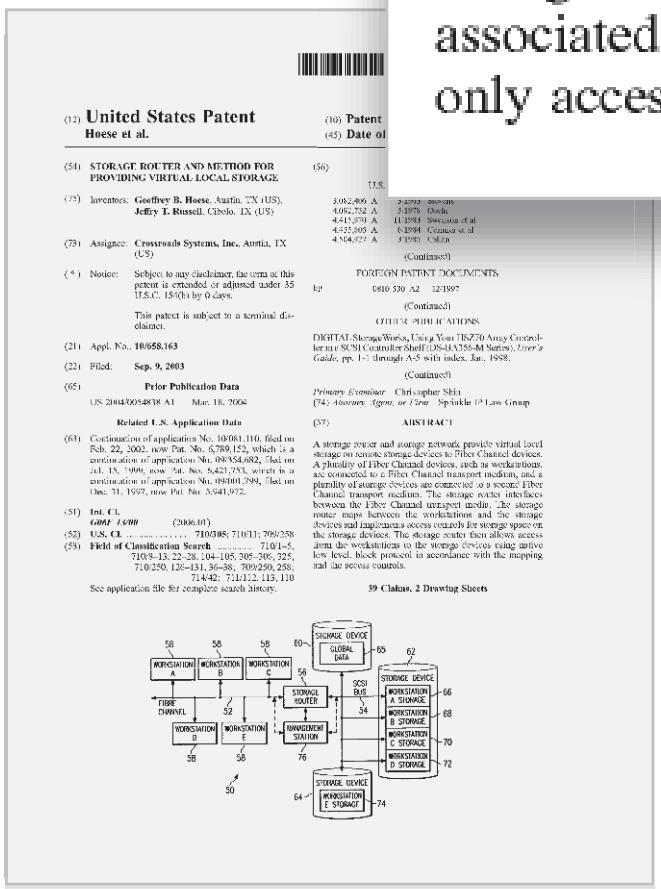
(12) United States Patent
Hoese et al.

(10) Patent
(45) Date of

(54) STORAGE ROUTER AND METHOD FOR PROVIDING VIRTUAL LOCAL STORAGE

(75) Inventors: Geoffrey B. Hoese, Austin, TX (US); Jeffry T. Russell, Cibolo, TX (US)

(73) Assignee: Crossroads Systems, Inc., Austin, TX (US)

(*) Notice: Subject to any disclaimer, the term of this patent is extended or adjusted under 35 U.S.C. 154(b) by 0 days.

This patent is subject to a terminal disclaimer.

(21) Appl. No.: 10/658,163

(22) Filed: Sep. 9, 2003

(65) Prior Publication Data

US 2004/0054838 A1 Mar. 18, 2004

Related U.S. Application Data

(63) Continuation of application No. 10/081,110, filed on Feb. 22, 2002, now Pat. No. 6,789,152, which is a continuation of application No. 09/354,682, filed on Jul. 15, 1999, now Pat. No. 5,421,753, which is a continuation of application No. 08/001,799, filed on Dec. 31, 1997, now Pat. No. 5,941,972.

(51) Int. Cl.
G06F 15/00 (2006.01)

(52) U.S. Cl. 710/305; 710/11; 709/258

(58) Field of Classification Search 710/1–5, 710/8–13, 22–28, 104–105, 305–306, 325, 710/250, 126–131, 36–38; 709/250, 258; 714/42; 711/112, 113, 110

See application file for complete search history.

(56)

U.S.

3,082,406	A	3/1963	Stevens
4,092,732	A	5/1978	Ouchi
4,415,970	A	11/1983	Swenson et al
4,455,605	A	6/1984	Cormier et al
4,504,927	A	3/1985	Calzio

(Continued)

FOREIGN PATENT DOCUMENTS

bp 0810 530 A2 12/1997

(Continued)

OTHER PUBLICATIONS

DIGITAL Storage/Works, Using Your HSZ70 Array Controller in a SCSI Controller Shelf (DS-HA356-M Series), *User's Guide*, pp. 1-1 through A-5 with index, Jan. 1998.

(Continued)

Primary Examiner Christopher Shin
(74) *Attorney, Agent, or Firm* Sprinkle IP Law Group

(57) ABSTRACT

A storage router and storage network provide virtual local storage on remote storage devices to Fiber Channel devices. A plurality of Fiber Channel devices, such as workstations, are connected to a Fiber Channel transport medium, and a plurality of storage devices are connected to a second Fiber Channel transport medium. The storage router interfaces between the Fiber Channel transport media. The storage router maps between the workstations and the storage devices and implements access controls for storage space on the storage devices. The storage router then allows access from the workstations to the storage devices using native low level, block protocol in accordance with the mapping and the access controls.

39 Claims, 2 Drawing Sheets

Claim 14 U.S. Patent Number 7,051,147 B2

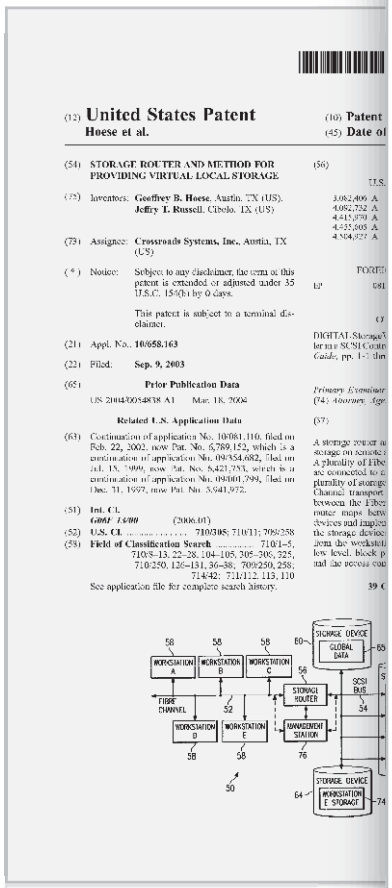

(12) **United States Patent**
Hoese et al.

(10) Patent
(45) Date of

(54) **STORAGE ROUTER AND METHOD FOR PROVIDING VIRTUAL LOCAL STORAGE**

(56)

(75) Inventors: **Geoffrey B. Hoese**, Austin, TX (US); **Jeffry T. Russell**, Cibolo, TX (US)

(73) Assignee: **Crossroads Systems, Inc.**, Austin, TX (US)

(*) Notice: Subject to any disclaimer, the term of this patent is extended or adjusted under 35 U.S.C. 154(b) by 0 days.

This patent is subject to a terminal disclaimer.

(21) Appl. No.: **10/658,163**

(22) Filed: **Sep. 9, 2003**

(65) **Prior Publication Data**

US 2004/0054838 A1 Mar. 18, 2004

Related U.S. Application Data

(63) Continuation of application No. 10/081,110, filed on Feb. 22, 2002, now Pat. No. 6,789,152, which is a continuation of application No. 09/354,682, filed on Jul. 15, 1999, now Pat. No. 6,421,753, which is a continuation of application No. 08/994,709, filed on Dec. 31, 1997, now Pat. No. 5,941,972.

(51) **Int. Cl.**
G06F 13/00 (2006.01)

(52) **U.S. Cl.** 710/305; 710/11; 709/258

(58) **Field of Classification Search** 710/1–5, 710/8–13, 22–28, 104–105, 305–306, 225, 710/250, 126–131, 36–38; 709/250, 258; 714/42; 711/112, 113, 110

See application file for complete search history.

39 C

14. An apparatus for providing virtual local storage on a remote storage device to a device operating according to a Fibre Channel protocol, comprising:

a first controller operable to connect to and interface with a first transport medium, wherein the first transport medium is operable according to the Fibre Channel protocol;

a second controller operable to connect to and interface with a second transport medium, wherein the second transport medium is operable according to the Fibre Channel protocol; and

a supervisor unit coupled to the first controller and the second controller, the supervisor unit operable to control access from the device connected to the first transport medium to the remote storage device connected to the second transport medium using native low level, block protocols according to a map between the device and the remote storage device.

Claim 21 U.S. Patent Number 7,051,147 B2

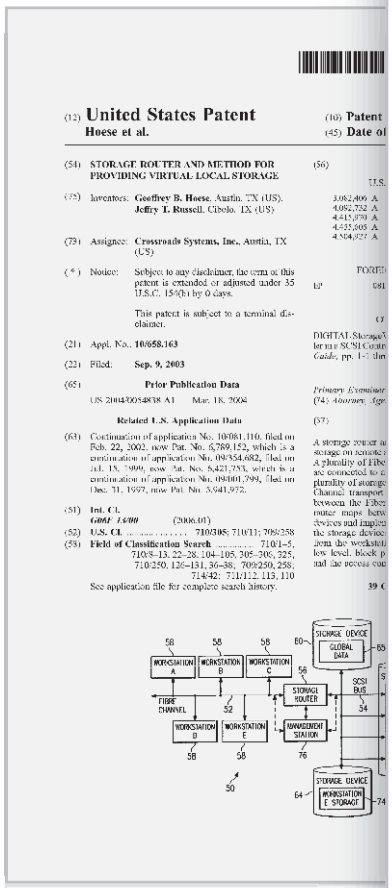

21. A system for providing virtual local storage on remote storage devices, comprising:

a first controller operable to connect to and interface with a first transport medium operable according to a Fibre Channel protocol;

a second controller operable to connect to and interface with a second transport medium operable according to the Fibre Channel protocol;

at least one device connected to the first transport medium;

at least one storage device connected to the second transport medium; and

an access control device coupled to the first controller and the second controller, the access control device operable to:

map between the at least one device and a storage space on the at least one storage device; and

control access from the at least one device to the at least one storage device using native low level, block protocol in accordance with the map.

Claim 28 U.S. Patent Number 7,051,147 B2

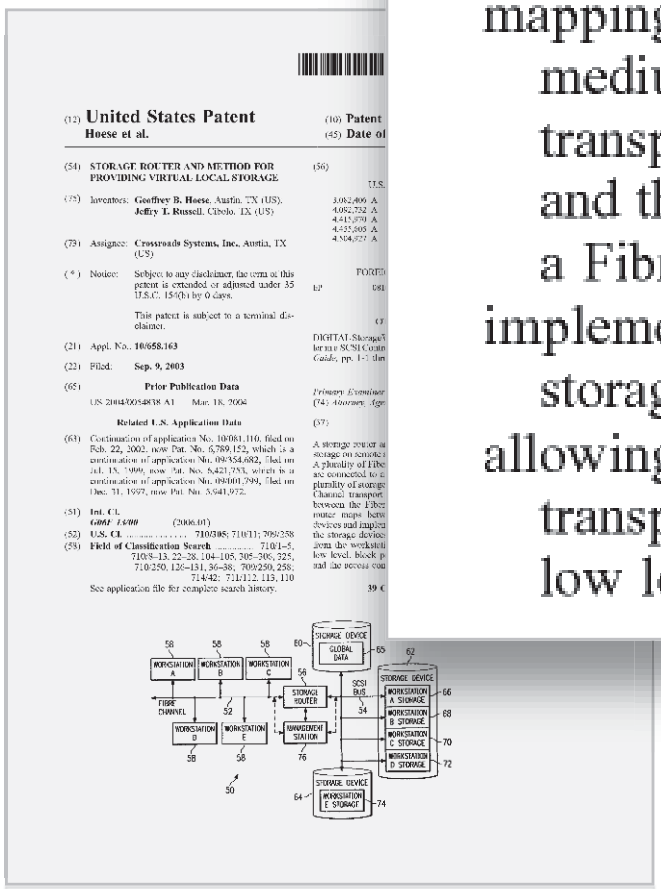

28. A method for providing virtual local storage on remote storage devices, comprising:

mapping between a device connected to a first transport medium and a storage device connected to a second transport medium, wherein the first transport medium and the second transport medium operate according to a Fibre Channel protocol;

implementing access controls for storage space on the storage device; and

allowing access from the device connected to the first transport medium to the storage device using native low level, block protocols.

Claim 34 U.S. Patent Number 7,051,147 B2

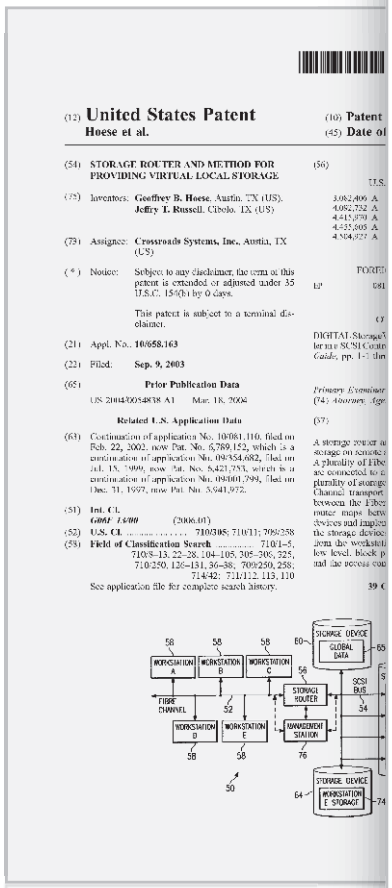

34. A system for providing virtual local storage, comprising:

a host device;

a storage device remote from the host device, wherein the storage device has a storage space;

a first controller;

a second controller

a first transport medium operable according to a Fibre Channel protocol, wherein the first transport medium connects the host device to the first controller;

a second transport medium operable according to the Fibre Channel protocol, wherein the second transport medium connects the second controller to the storage device;

a supervisor unit coupled to the first controller and the second controller, the supervisor unit operable to:

maintain a configuration that maps between the host device and at least a portion of the storage space on the storage device; and

implement access controls according to the configuration for the storage space on the storage device using native low level, block protocol.

Claim 1 U.S. Patent Number 7,934,041 B2

(12) United States Patent
Hoese et al.

(54) STORAGE ROUTER AND METHOD FOR PROVIDING VIRTUAL LOCAL STORAGE

(75) Inventors: Geoffrey B. Hoese, Austin, TX (US); Jeffry T. Russell, Cibolo, TX (US)

(73) Assignee: Crossroads Systems, Inc., Austin, TX (US)

(*) Notice: Subject to any disclaimer, the term of this patent is extended or adjusted under 35 U.S.C. 154(b) by 0 days.

(21) Appl. No.: 12/690,592

(22) Filed: Jan. 20, 2010

(65) Prior Publication Data

US 2010/0121993 A1 May 13, 2010

Related U.S. Application Data

(63) Continuation of application No. 12/552,885, filed on Sep. 2, 2009, which is a continuation of application No. 11/851,724, filed on Sep. 7, 2007, now Pat. No. 7,689,754, which is a continuation of application No. 11/442,878, filed on May 30, 2006, now abandoned, which is a continuation of application No. 11/353,826, filed on Feb. 14, 2006, now Pat. No. 7,340,549, which is a continuation of application No. 10/658,163, filed on Sep. 9, 2003, now Pat. No. 7,051,147, which is a continuation of application No. 10/081,110, filed on Feb. 22, 2002, now Pat. No. 6,789,152, which is a continuation of application No. 09/354,682, filed on Jul. 15, 1999, now Pat. No. 6,421,753, which is a continuation of application No. 09/001,799, filed on Dec. 31, 1997, now Pat. No. 5,941,972.

(51) Int. Cl.
G06F 13/00 (2006.01)
G06F 3/00 (2006.01)

(52) U.S. Cl. ...

(56)

U.S.

3,082,406 A
4,092,732 A

FORE

All

Black Box, SCSI Fibre
2 pages, 1996, Jun. 1

Primary Examiner
(74) Attorney, Age

(57)

A storage router a
storage on remote s
connected to a first
storage router mai
the remote storage
transport medium
devices connected
sentations of storag
storage router cont
the first transport m
storage devices in a
from devices conn
remote storage dev

53 C

1. A storage router for providing virtual local storage on remote storage devices, comprising:

a first controller operable to interface with a first transport medium, wherein the first medium is a serial transport media; and

a processing device coupled to the first controller, wherein the processing device is configured to:

maintain a map to allocate storage space on the remote storage devices to devices connected to the first transport medium by associating representations of the devices connected to the first transport medium with representations of storage space on the remote storage devices, wherein each representation of a device connected to the first transport medium is associated with one or more representations of storage space on the remote storage devices;

control access from the devices connected to the first transport medium to the storage space on the remote storage devices in accordance with the map; and

allow access from devices connected to the first transport medium to the remote storage devices using native low level block protocol.

Claim 14 U.S. Patent Number 7,934,041 B2

14. The storage router of claim **1**, wherein the representations of devices connected to the first transport medium are unique identifiers.

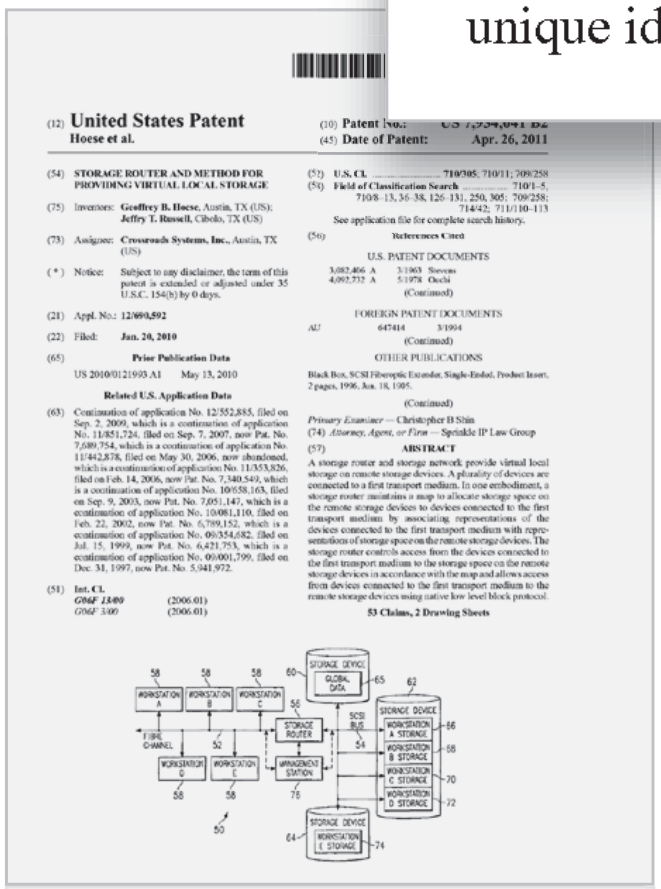

(12) **United States Patent**
Hoese et al.

(10) **Patent No.:** US 7,934,041 B2
(45) **Date of Patent:** **Apr. 26, 2011**

(54) **STORAGE ROUTER AND METHOD FOR PROVIDING VIRTUAL LOCAL STORAGE**

(75) Inventors: **Geoffrey B. Hoese**, Austin, TX (US); **Jeffry T. Russell**, Cibolo, TX (US)

(73) Assignee: **Crossroads Systems, Inc.**, Austin, TX (US)

(*) Notice: Subject to any disclaimer, the term of this patent is extended or adjusted under 35 U.S.C. 154(b) by 0 days.

(21) Appl. No.: **12/690,592**

(22) Filed: **Jan. 20, 2010**

(65) **Prior Publication Data**

US 2010/0121993 A1 May 13, 2010

Related U.S. Application Data

(63) Continuation of application No. 12/552,885, filed on Sep. 2, 2009, which is a continuation of application No. 11/851,724, filed on Sep. 7, 2007, now Pat. No. 7,689,754, which is a continuation of application No. 11/442,878, filed on May 30, 2006, now abandoned, which is a continuation of application No. 11/353,826, filed on Feb. 14, 2006, now Pat. No. 7,340,549, which is a continuation of application No. 10/658,163, filed on Sep. 9, 2003, now Pat. No. 7,051,147, which is a continuation of application No. 10/081,110, filed on Feb. 22, 2002, now Pat. No. 6,789,152, which is a continuation of application No. 09/354,682, filed on Jul. 15, 1999, now Pat. No. 6,421,753, which is a continuation of application No. 09/001,799, filed on Dec. 31, 1997, now Pat. No. 5,941,972.

(51) **Int. Cl.**
G06F 13/00 (2006.01)
G06F 3/00 (2006.01)

(52) **U.S. Cl.** **710/305**; 710/11; 709/258
(58) **Field of Classification Search** 710/1–5, 710/8–13, 36–38, 126–131, 250, 305; 709/258; 714/42; 711/110–113
See application file for complete search history.

(56) **References Cited**

U.S. PATENT DOCUMENTS

3,082,406 A 3/1963 Stevens
4,092,732 A 5/1978 Ouchi
(Continued)

FOREIGN PATENT DOCUMENTS

AU 647414 3/1994
(Continued)

OTHER PUBLICATIONS

Black Box, SCSI Fiberoptic Extender, Single-Ended, Product Insert, 2 pages, 1996, Jun. 18, 1995.
(Continued)

Primary Examiner — Christopher B Shin
(74) *Attorney, Agent, or Firm* — Sprinkle IP Law Group

(57) **ABSTRACT**

A storage router and storage network provide virtual local storage on remote storage devices. A plurality of devices are connected to a first transport medium. In one embodiment, a storage router maintains a map to allocate storage space on the remote storage devices to devices connected to the first transport medium by associating representations of the devices connected to the first transport medium with representations of storage space on the remote storage devices. The storage router controls access from the devices connected to the first transport medium to the storage space on the remote storage devices in accordance with the map and allows access from devices connected to the first transport medium to the remote storage devices using native low level block protocol.

53 Claims, 2 Drawing Sheets

Claim 15 U.S. Patent Number 7,934,041 B2

15. The storage router of claim **14**, wherein the unique identifiers are world wide names.

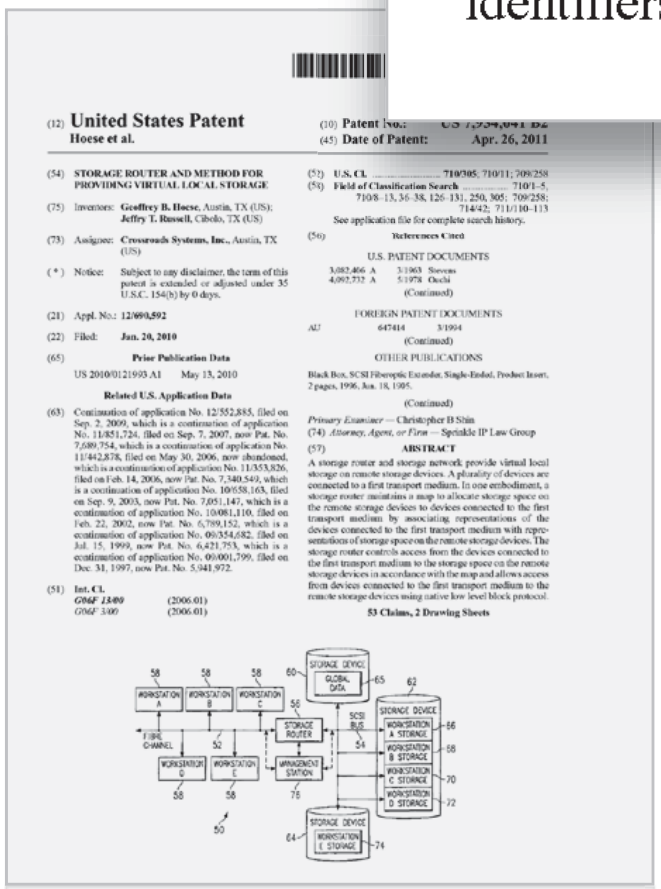

(12) **United States Patent**
Hoese et al.

(10) **Patent No.:** US 7,934,041 B2
(45) **Date of Patent:** **Apr. 26, 2011**

(54) **STORAGE ROUTER AND METHOD FOR PROVIDING VIRTUAL LOCAL STORAGE**

(75) Inventors: **Geoffrey B. Hoese**, Austin, TX (US); **Jeffry T. Russell**, Cibolo, TX (US)

(73) Assignee: **Crossroads Systems, Inc.**, Austin, TX (US)

(*) Notice: Subject to any disclaimer, the term of this patent is extended or adjusted under 35 U.S.C. 154(b) by 0 days.

(21) Appl. No.: **12/690,592**

(22) Filed: **Jan. 20, 2010**

(65) **Prior Publication Data**

US 2010/0121993 A1 May 13, 2010

Related U.S. Application Data

(63) Continuation of application No. 12/552,885, filed on Sep. 2, 2009, which is a continuation of application No. 11/851,724, filed on Sep. 7, 2007, now Pat. No. 7,689,754, which is a continuation of application No. 11/442,878, filed on May 30, 2006, now abandoned, which is a continuation of application No. 11/353,826, filed on Feb. 14, 2006, now Pat. No. 7,340,549, which is a continuation of application No. 10/658,163, filed on Sep. 9, 2003, now Pat. No. 7,051,147, which is a continuation of application No. 10/081,110, filed on Feb. 22, 2002, now Pat. No. 6,789,152, which is a continuation of application No. 09/354,682, filed on Jul. 15, 1999, now Pat. No. 6,421,753, which is a continuation of application No. 09/001,799, filed on Dec. 31, 1997, now Pat. No. 5,941,972.

(51) **Int. Cl.**
G06F 13/00 (2006.01)
G06F 3/00 (2006.01)

(52) **U.S. Cl.** **710/305**; 710/11; 709/258
(58) **Field of Classification Search** 710/1–5, 710/8–13, 36–38, 126–131, 250, 305; 709/258; 714/42; 711/110–113
See application file for complete search history.

(56) **References Cited**

U.S. PATENT DOCUMENTS

3,082,406 A 3/1963 Stevens
4,092,732 A 5/1978 Ouchi
(Continued)

FOREIGN PATENT DOCUMENTS

AU 647414 3/1994
(Continued)

OTHER PUBLICATIONS

Black Box, SCSI Fiberoptic Extender, Single-Ended, Product Insert, 2 pages, 1996, Jun. 18, 1995.
(Continued)

Primary Examiner — Christopher B Shin
(74) *Attorney, Agent, or Firm* — Sprinkle IP Law Group

(57) **ABSTRACT**

A storage router and storage network provide virtual local storage on remote storage devices. A plurality of devices are connected to a first transport medium. In one embodiment, a storage router maintains a map to allocate storage space on the remote storage devices to devices connected to the first transport medium by associating representations of the devices connected to the first transport medium with representations of storage space on the remote storage devices. The storage router controls access from the devices connected to the first transport medium to the storage space on the remote storage devices in accordance with the map and allows access from devices connected to the first transport medium to the remote storage devices using native low level block protocol.

53 Claims, 2 Drawing Sheets

Claim 20 U.S. Patent Number 7,934,041 B2

(12) **United States Patent**
Hoese et al.

(10) **Patent**
(45) **Date of**

(54) **STORAGE ROUTER AND METHOD FOR PROVIDING VIRTUAL LOCAL STORAGE**

(75) Inventors: **Geoffrey B. Hoese**, Austin, TX (US); **Jeffry T. Russell**, Cibolo, TX (US)

(73) Assignee: **Crossroads Systems, Inc.**, Austin, TX (US)

(*) Notice: Subject to any disclaimer, the term of this patent is extended or adjusted under 35 U.S.C. 154(b) by 0 days.

(21) Appl. No.: **12/690,592**

(22) Filed: **Jan. 20, 2010**

(65) **Prior Publication Data**

US 2010/0121993 A1 May 13, 2010

Related U.S. Application Data

(63) Continuation of application No. 12/552,885, filed on Sep. 2, 2009, which is a continuation of application No. 11/851,724, filed on Sep. 7, 2007, now Pat. No. 7,689,754, which is a continuation of application No. 11/442,878, filed on May 30, 2006, now abandoned, which is a continuation of application No. 11/353,826, filed on Feb. 14, 2006, now Pat. No. 7,340,549, which is a continuation of application No. 10/658,163, filed on Sep. 9, 2003, now Pat. No. 7,051,147, which is a continuation of application No. 10/081,110, filed on Feb. 22, 2002, now Pat. No. 6,789,152, which is a continuation of application No. 09/354,682, filed on Jul. 15, 1999, now Pat. No. 6,421,753, which is a continuation of application No. 09/001,799, filed on Dec. 31, 1997, now Pat. No. 5,941,972.

(51) **Int. Cl.**
G06F 13/00 (2006.01)
G06F 3/00 (2006.01)

(52) **U.S. Cl.** ....
(58) **Field of Cla**
710/8
See applicat

(56)
U.S.
3,082,406 A
4,092,732 A
FOREI
AU
CI
Black Box, SCSI Fibe
2 pages, 1996, Jan. 1

Primary Examiner
(74) *Attorney, Age*

(57)
A storage router a
storage on remote s
connected to a first
storage router main
the remote storage
transport medium
devices connected
serverless of storag
storage router cont
the first transport m
storage devices in a
from devices conn
remote storage devi
53 C

20. A storage network comprising:

a set of devices connected a first transport medium, wherein the first transport medium;

a set of remote storage devices connected to a second transport medium;

a storage router connected to the serial transport medium;

a storage router connected to the first transport medium and second transport medium to provide virtual local storage on the remote storage devices, the storage router configured to:

maintain a map to allocate storage space on the remote storage devices to devices connected to the first transport medium by associating representations of the devices connected to the first transport medium with representations of storage space on the remote storage devices, wherein each representation of a device connected to the first transport medium is associated with one or more representations of storage space on the remote storage devices;

control access from the devices connected to the first transport medium to the storage space on the remote storage devices in accordance with the map; and

allow access from devices connected to the first transport medium to the remote storage devices using native low level block protocol.

Claim 33 U.S. Patent Number 7,934,041 B2

33. The storage network of claim **20**, wherein the representations of devices connected to the first transport medium are unique identifiers.

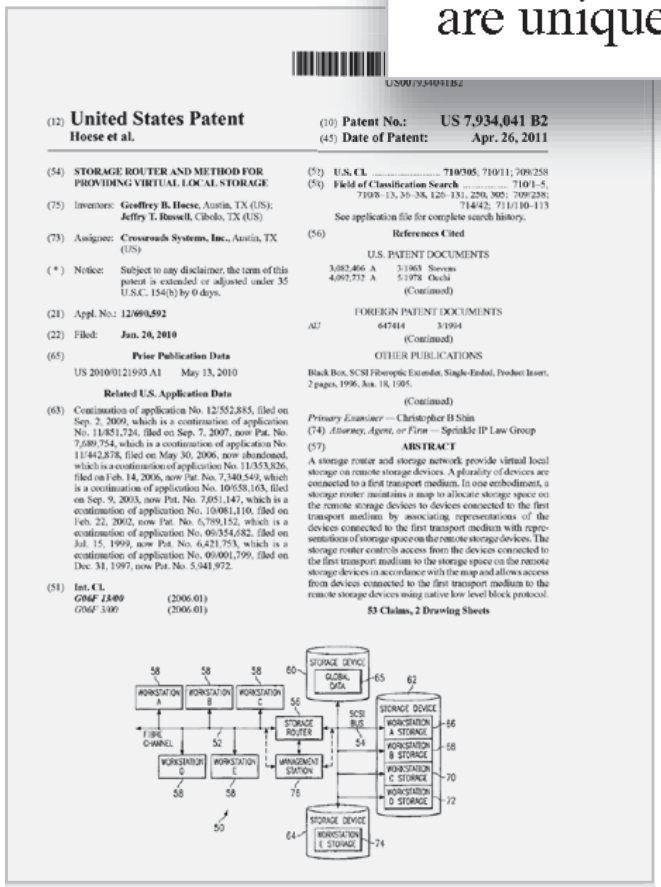

(12) **United States Patent**
Hoese et al.

(10) **Patent No.: US 7,934,041 B2**
(45) **Date of Patent: Apr. 26, 2011**

(54) **STORAGE ROUTER AND METHOD FOR PROVIDING VIRTUAL LOCAL STORAGE**

(75) Inventors: **Geoffrey B. Hoese**, Austin, TX (US); **Jeffry T. Russell**, Cibolo, TX (US)

(73) Assignee: **Crossroads Systems, Inc.**, Austin, TX (US)

(*) Notice: Subject to any disclaimer, the term of this patent is extended or adjusted under 35 U.S.C. 154(b) by 0 days.

(21) Appl. No.: **12/690,592**

(22) Filed: **Jan. 20, 2010**

(65) **Prior Publication Data**

US 2010/0121993 A1 May 13, 2010

Related U.S. Application Data

(63) Continuation of application No. 12/552,885, filed on Sep. 2, 2009, which is a continuation of application No. 11/851,724, filed on Sep. 7, 2007, now Pat. No. 7,689,754, which is a continuation of application No. 11/442,878, filed on May 30, 2006, now abandoned, which is a continuation of application No. 11/353,826, filed on Feb. 14, 2006, now Pat. No. 7,340,549, which is a continuation of application No. 10/658,163, filed on Sep. 9, 2003, now Pat. No. 7,051,147, which is a continuation of application No. 10/081,110, filed on Feb. 22, 2002, now Pat. No. 6,789,152, which is a continuation of application No. 09/354,682, filed on Jul. 15, 1999, now Pat. No. 6,421,753, which is a continuation of application No. 09/001,799, filed on Dec. 31, 1997, now Pat. No. 5,941,972.

(51) **Int. Cl.**
G06F 13/00 (2006.01)
G06F 3/00 (2006.01)

(52) **U.S. Cl.** **710/305**; 710/11; 709/258
(58) **Field of Classification Search** 710/1–5, 710/8–13, 36–38, 120–131, 220, 305; 709/238; 714/42; 711/110–113
See application file for complete search history.

(56) **References Cited**

U.S. PATENT DOCUMENTS

3,082,406 A 3/1963 Stevens
4,092,732 A 5/1978 Ouchi
(Continued)

FOREIGN PATENT DOCUMENTS

AU 647414 3/1994
(Continued)

OTHER PUBLICATIONS

Black Box, SCSI Fiberoptic Extender, Single-Ended, Product Insert, 2 pages, 1996, Jun. 18, 1995.
(Continued)

Primary Examiner — Christopher B Shin
(74) *Attorney, Agent, or Firm* — Sprinkle IP Law Group

(57) **ABSTRACT**

A storage router and storage network provide virtual local storage on remote storage devices. A plurality of devices are connected to a first transport medium. In one embodiment, a storage router maintains a map to allocate storage space on the remote storage devices to devices connected to the first transport medium by associating representations of the devices connected to the first transport medium with representations of storage space on the remote storage devices. The storage router controls access from the devices connected to the first transport medium to the storage space on the remote storage devices in accordance with the map and allows access from devices connected to the first transport medium to the remote storage devices using native low level block protocol.

53 Claims, 2 Drawing Sheets

Claim 34 U.S. Patent Number 7,934,041 B2

34. The storage network of claim **33**, wherein the unique identifiers are world wide names.

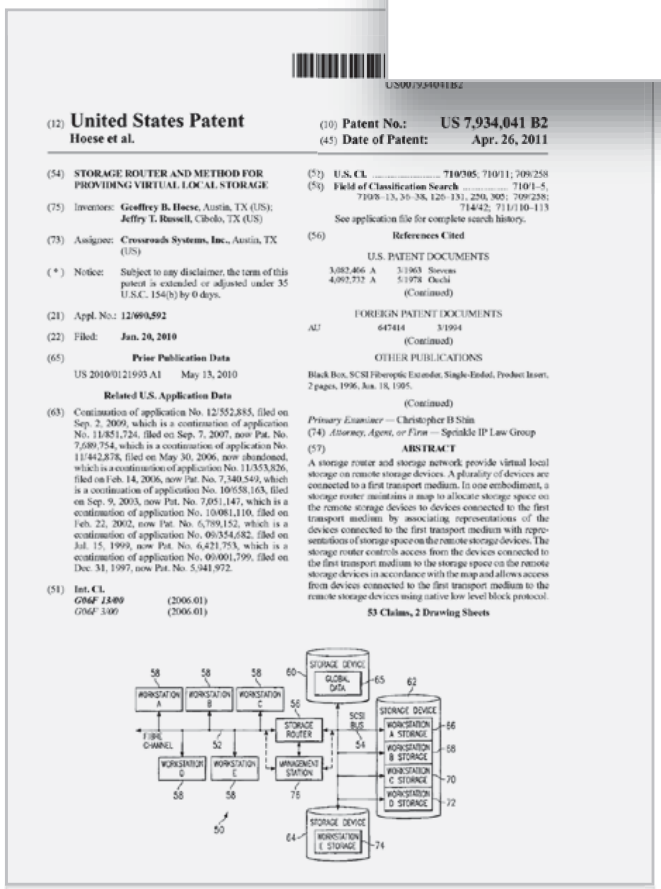

(12) **United States Patent**
Hoese et al.

(10) **Patent No.: US 7,934,041 B2**
(45) **Date of Patent: Apr. 26, 2011**

(54) **STORAGE ROUTER AND METHOD FOR PROVIDING VIRTUAL LOCAL STORAGE**

(75) Inventors: **Geoffrey B. Hoese**, Austin, TX (US); **Jeffry T. Russell**, Cibolo, TX (US)

(73) Assignee: **Crossroads Systems, Inc.**, Austin, TX (US)

(*) Notice: Subject to any disclaimer, the term of this patent is extended or adjusted under 35 U.S.C. 154(b) by 0 days.

(21) Appl. No.: **12/690,592**

(22) Filed: **Jan. 20, 2010**

(65) **Prior Publication Data**

US 2010/0121993 A1 May 13, 2010

Related U.S. Application Data

(63) Continuation of application No. 12/552,885, filed on Sep. 2, 2009, which is a continuation of application No. 11/851,724, filed on Sep. 7, 2007, now Pat. No. 7,689,754, which is a continuation of application No. 11/442,878, filed on May 30, 2006, now abandoned, which is a continuation of application No. 11/353,826, filed on Feb. 14, 2006, now Pat. No. 7,340,549, which is a continuation of application No. 10/658,163, filed on Sep. 9, 2003, now Pat. No. 7,051,147, which is a continuation of application No. 10/081,110, filed on Feb. 22, 2002, now Pat. No. 6,789,152, which is a continuation of application No. 09/354,682, filed on Jul. 15, 1999, now Pat. No. 6,421,753, which is a continuation of application No. 09/001,799, filed on Dec. 31, 1997, now Pat. No. 5,941,972.

(51) **Int. Cl.**
G06F 13/00 (2006.01)
G06F 3/00 (2006.01)

(52) **U.S. Cl.** **710/305**; 710/11; 709/258
(58) **Field of Classification Search** 710/1–5, 710/8–13, 36–38, 120–131, 220, 305; 709/238; 714/42; 711/110–113
See application file for complete search history.

(56) **References Cited**

U.S. PATENT DOCUMENTS

3,082,406 A 3/1963 Stevens
4,092,732 A 5/1978 Ouchi
(Continued)

FOREIGN PATENT DOCUMENTS

AU 647414 3/1994
(Continued)

OTHER PUBLICATIONS

Black Box, SCSI Fiberoptic Extender, Single-Ended, Product Insert, 2 pages, 1996, Jun. 18, 1995.
(Continued)

Primary Examiner — Christopher B Shin
(74) *Attorney, Agent, or Firm* — Sprinkle IP Law Group

(57) **ABSTRACT**

A storage router and storage network provide virtual local storage on remote storage devices. A plurality of devices are connected to a first transport medium. In one embodiment, a storage router maintains a map to allocate storage space on the remote storage devices to devices connected to the first transport medium by associating representations of the devices connected to the first transport medium with representations of storage space on the remote storage devices. The storage router controls access from the devices connected to the first transport medium to the storage space on the remote storage devices in accordance with the map and allows access from devices connected to the first transport medium to the remote storage devices using native low level block protocol.

53 Claims, 2 Drawing Sheets

Claim 37 U.S. Patent Number 7,934,041 B2

(12) **United States Patent**
Hoese et al.

(10) **Patent**
(45) **Date of**

(54) **STORAGE ROUTER AND METHOD FOR PROVIDING VIRTUAL LOCAL STORAGE**

(75) Inventors: **Geoffrey B. Hoese**, Austin, TX (US); **Jeffry T. Russell**, Cibolo, TX (US)

(73) Assignee: **Crossroads Systems, Inc.**, Austin, TX (US)

(*) Notice: Subject to any disclaimer, the term of this patent is extended or adjusted under 35 U.S.C. 154(b) by 0 days.

(21) Appl. No.: **12/690,592**

(22) Filed: **Jan. 20, 2010**

(65) **Prior Publication Data**

US 2010/0121993 A1 May 13, 2010

Related U.S. Application Data

(63) Continuation of application No. 12/552,885, filed on Sep. 2, 2009, which is a continuation of application No. 11/851,724, filed on Sep. 7, 2007, now Pat. No. 7,689,754, which is a continuation of application No. 11/442,878, filed on May 30, 2006, now abandoned, which is a continuation of application No. 11/353,826, filed on Feb. 14, 2006, now Pat. No. 7,340,549, which is a continuation of application No. 10/658,163, filed on Sep. 9, 2003, now Pat. No. 7,051,147, which is a continuation of application No. 10/081,110, filed on Feb. 22, 2002, now Pat. No. 6,789,152, which is a continuation of application No. 09/354,682, filed on Jul. 15, 1999, now Pat. No. 6,421,753, which is a continuation of application No. 09/001,799, filed on Dec. 31, 1997, now Pat. No. 5,941,972.

(51) **Int. Cl.**
G06F 13/00 (2006.01)
G06F 3/00 (2006.01)

(52) **U.S. Cl.** ....
(58) **Field of Cla** 710/8

See applicat

(56)

U.S.
3,082,406 A
4,092,732 A

FOREI
AU

OT
Black Box, SCSI Fibe
2 pages, 1996, Jan. 1

Primary Examiner
(74) *Attorney, Age*

(57)

A storage router a
storage on remote s
connected to a first
storage router main
the remote storage
transport medium
devices connected
serialization of storag
storage router cont
the first transport m
storage devices in a
from devices conn
remote storage devi

53 C

37. A method for providing virtual local storage on remote storage devices comprising:

connecting a storage router between a set of devices connected to a first transport medium and a set of remote storage devices, wherein the first transport medium is a serial transport medium;

maintaining a map at the storage router to allocate storage space on the remote storage devices to devices connected to the first transport medium by associating representations of the devices connected to the first transport medium with representations of storage space on the remote storage devices, wherein each representation of a device connected to the first transport medium is associated with one or more representations of storage space on the remote storage devices;

controlling access from the devices connected to the first transport medium to the storage space on the remote storage devices in accordance with the map; and

allowing access from devices connected to the first transport medium to the remote storage devices using native low level block protocol.

Claim 50 U.S. Patent Number 7,934,041 B2

50. The method of claim **37**, wherein the representations of devices connected to the first transport medium are unique identifiers.

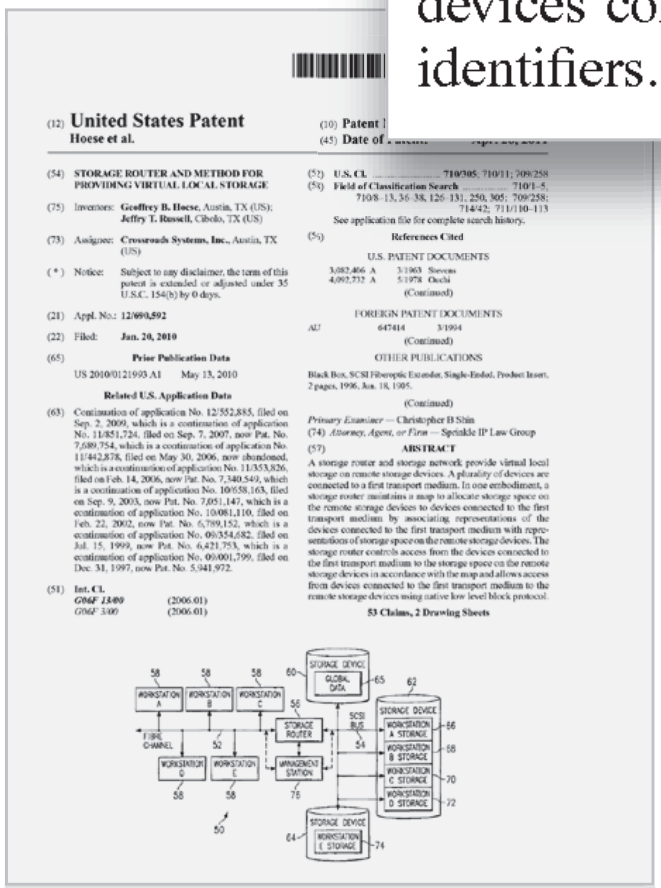

(12) **United States Patent**
Hoese et al.

(10) **Patent**
(45) **Date of**

(54) **STORAGE ROUTER AND METHOD FOR PROVIDING VIRTUAL LOCAL STORAGE**

(75) Inventors: **Geoffrey B. Hoese**, Austin, TX (US); **Jeffry T. Russell**, Cibolo, TX (US)

(73) Assignee: **Crossroads Systems, Inc.**, Austin, TX (US)

(*) Notice: Subject to any disclaimer, the term of this patent is extended or adjusted under 35 U.S.C. 154(b) by 0 days.

(21) Appl. No.: **12/690,592**

(22) Filed: **Jan. 20, 2010**

(65) **Prior Publication Data**

US 2010/0121993 A1 May 13, 2010

Related U.S. Application Data

(63) Continuation of application No. 12/552,885, filed on Sep. 2, 2009, which is a continuation of application No. 11/851,724, filed on Sep. 7, 2007, now Pat. No. 7,689,754, which is a continuation of application No. 11/442,878, filed on May 30, 2006, now abandoned, which is a continuation of application No. 11/353,826, filed on Feb. 14, 2006, now Pat. No. 7,340,549, which is a continuation of application No. 10/658,163, filed on Sep. 9, 2003, now Pat. No. 7,051,147, which is a continuation of application No. 10/081,110, filed on Feb. 22, 2002, now Pat. No. 6,789,152, which is a continuation of application No. 09/354,682, filed on Jul. 15, 1999, now Pat. No. 6,421,753, which is a continuation of application No. 09/001,799, filed on Dec. 31, 1997, now Pat. No. 5,941,972.

(51) **Int. Cl.**
G06F 13/00 (2006.01)
G06F 3/00 (2006.01)

(52) **U.S. Cl.** 710/305; 710/11; 709/258
(58) **Field of Classification Search** 710/1–5, 710/8–13, 36–38, 126–131, 250, 305; 709/258; 714/42; 711/110–113
See application file for complete search history.

(56) **References Cited**

U.S. PATENT DOCUMENTS

3,082,406 A 3/1963 Stevens
4,092,732 A 5/1978 Ouchi
(Continued)

FOREIGN PATENT DOCUMENTS

AU 647414 3/1994
(Continued)

OTHER PUBLICATIONS

Black Box, SCSI Fiberoptic Extender, Single-Ended, Product Insert, 2 pages, 1996, Jun. 18, 1995.
(Continued)

Primary Examiner — Christopher B Shin
(74) *Attorney, Agent, or Firm* — Sprinkle IP Law Group

(57) **ABSTRACT**

A storage router and storage network provide virtual local storage on remote storage devices. A plurality of devices are connected to a first transport medium. In one embodiment, a storage router maintains a map to allocate storage space on the remote storage devices to devices connected to the first transport medium by associating representations of the devices connected to the first transport medium with representations of storage space on the remote storage devices. The storage router controls access from the devices connected to the first transport medium to the storage space on the remote storage devices in accordance with the map and allows access from devices connected to the first transport medium to the remote storage devices using native low level block protocol.

53 Claims, 2 Drawing Sheets

Claim 51 U.S. Patent Number 7,934,041 B2

51. The method of claim **50**, wherein the unique identifiers are world wide names.

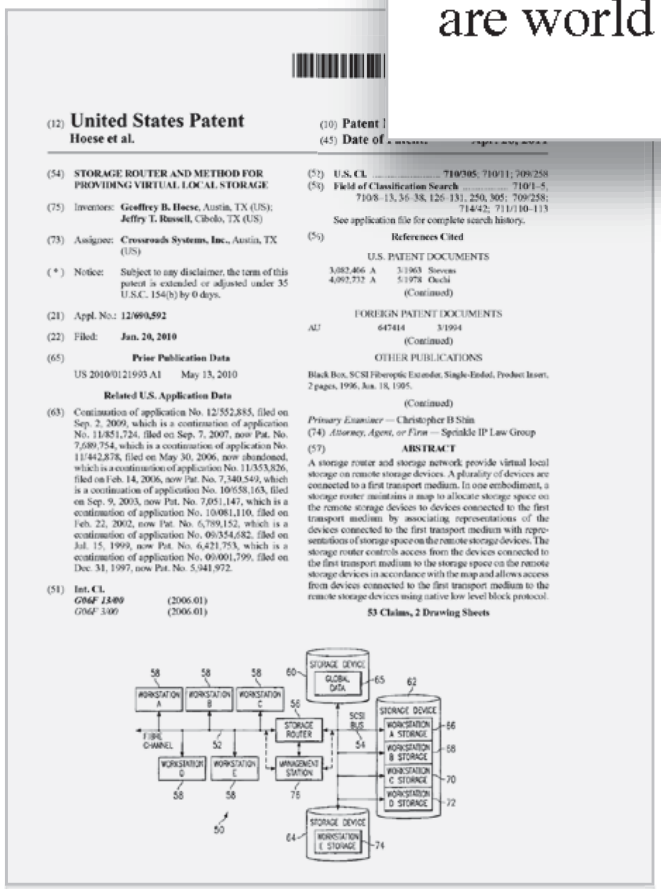

(12) **United States Patent**
Hoese et al.

(10) **Patent**
(45) **Date of**

(54) **STORAGE ROUTER AND METHOD FOR PROVIDING VIRTUAL LOCAL STORAGE**

(75) Inventors: **Geoffrey B. Hoese**, Austin, TX (US); **Jeffry T. Russell**, Cibolo, TX (US)

(73) Assignee: **Crossroads Systems, Inc.**, Austin, TX (US)

(*) Notice: Subject to any disclaimer, the term of this patent is extended or adjusted under 35 U.S.C. 154(b) by 0 days.

(21) Appl. No.: **12/690,592**

(22) Filed: **Jan. 20, 2010**

(65) **Prior Publication Data**

US 2010/0121993 A1 May 13, 2010

Related U.S. Application Data

(63) Continuation of application No. 12/552,885, filed on Sep. 2, 2009, which is a continuation of application No. 11/851,724, filed on Sep. 7, 2007, now Pat. No. 7,689,754, which is a continuation of application No. 11/442,878, filed on May 30, 2006, now abandoned, which is a continuation of application No. 11/353,826, filed on Feb. 14, 2006, now Pat. No. 7,340,549, which is a continuation of application No. 10/658,163, filed on Sep. 9, 2003, now Pat. No. 7,051,147, which is a continuation of application No. 10/081,110, filed on Feb. 22, 2002, now Pat. No. 6,789,152, which is a continuation of application No. 09/354,682, filed on Jul. 15, 1999, now Pat. No. 6,421,753, which is a continuation of application No. 09/001,799, filed on Dec. 31, 1997, now Pat. No. 5,941,972.

(51) **Int. Cl.**
G06F 13/00 (2006.01)
G06F 3/00 (2006.01)

(52) **U.S. Cl.** **710/305**; 710/11; 709/258
(58) **Field of Classification Search** 710/1–5, 710/8–13, 36–38, 126–131, 250, 305; 709/258; 714/42; 711/110–113
See application file for complete search history.

(56) **References Cited**

U.S. PATENT DOCUMENTS

3,082,406 A 3/1963 Stevens
4,092,732 A 5/1978 Ouchi
(Continued)

FOREIGN PATENT DOCUMENTS

AU 647414 3/1994
(Continued)

OTHER PUBLICATIONS

Black Box, SCSI Fiberoptic Extender, Single-Ended, Product Insert, 2 pages, 1996, Jun. 18, 1995.
(Continued)

Primary Examiner — Christopher B Shin
(74) *Attorney, Agent, or Firm* — Sprinkle IP Law Group

(57) **ABSTRACT**

A storage router and storage network provide virtual local storage on remote storage devices. A plurality of devices are connected to a first transport medium. In one embodiment, a storage router maintains a map to allocate storage space on the remote storage devices to devices connected to the first transport medium by associating representations of the devices connected to the first transport medium with representations of storage space on the remote storage devices. The storage router controls access from the devices connected to the first transport medium to the storage space on the remote storage devices in accordance with the map and allows access from devices connected to the first transport medium to the remote storage devices using native low level block protocol.

53 Claims, 2 Drawing Sheets

Hospodor Declaration

61. Moreover, to the extent any modifications would have been needed to the teachings of the CRD-5500 Manual in order to accommodate the teachings of the HP Journal, such modifications would have been within the level of ordinary skill in the art of network storage. For example, because the CRD-5500 RAID controller was *specifically intended to be used with Fibre Channel*, it already includes high-performance hardware components capable of supporting high rates of data movement. And, because the firmware in the CRD-5500 RAID controller is user upgradeable, one of ordinary skill in the art could have easily made any software modifications necessary to accommodate Fibre Channel-based devices. Accordingly, any hardware or software modifications to the components of the CRD-5500 necessary to keep them operating in their intended manner would have been well within the skills of one of ordinary skill in the art.

Ex. 1003 (Hospodor Decl.) ¶ 61 (cited in 1226 Reply at 19)

Petitioners Rely on the Knowledge of One of Ordinary Skill in the Art to Create New Data Structures Using a Host Identifier Instead of the Channel Number

Petitioners attempt to shoe-horn these changes under the umbrella of simple modifications which are not explained in the Petition:

a person of ordinary skill in the art would know how to physically combine the references, know how such a combination would identify particular hosts on a Fibre Channel arbitrated loop, and would be able to create data structures implementing the CRD-5500's goal of "assign[ing] redundancy groups to a particular host."

"any hardware or software modifications to the components of the CRD-5500 necessary to keep them operating in their intended manner would have been well within the skills of one of ordinary skill in the art." CQ-1003, ¶ 61.

1226 Reply at 16

Dr. Levy Testified One of Skill in the Art Could Create the Claimed Map Only After Reviewing the Specification

Neither the Petition nor the CRD-5500 Manual contain any motivation to create new data structures containing host specific IDs, because the CRD-5500's goal is not assigning redundancy groups to a particular host.

Dr. Levy testified that a POSITA could create the claimed map only **after** being told the function and reading the specification—i.e., only with the benefit of hindsight in light of the specification.

> the specification sufficiently instructs one of skill in the art what to do to create such a map.
>
> Ex. 1025 219:25-220:1

> I mean, the only answer I can give you is that reading this specification, I believe a person of ordinary skill in the art would understand how to construct a data structure with the performance of the function of mapping disclosed in these patents.
>
> Ex. 1025 94:8-12

1226 Reply at 16 (FRE 106)

Petitioners' Proposed Constructions and the Claims Require the Capability to Handle Multiple Hosts on a Single Transport Medium

The invention requires the capability to map different storage to different hosts on the same transport medium (i.e., a common communications link):

Petitioners' proposed constructions for mapping limitations:

> *"to allocate storage on the storage devices to devices on the first transport medium to facilitate routing and access controls."*
>
> 1226 Pet. at 14

> *"to allocate storage on the storage devices to devices to facilitate routing and access controls."*
>
> 1544 Pet. at 11

Petitioners' Proposed Constructions and the Claims Require the Capability to Handle Multiple Hosts on a Single Transport Medium

Petitioners proposed no relevant construction in the -1463 Proceeding, but the '041 Patent Requires Such Capability:

Each of independent claims 1, 20 and 37 include limitations directed to a storage router that "maintain[s] a map to allocate storage space on the remote storage devices to devices connected to the first transport medium by associating representations of the devices connected to the first transport medium with representations of storage space on the remote storage devices . . ." and "control[s] access from the devices connected to the first transport medium to the storage space on the remote storage devices in accordance with the map."

1463 POR at 23

Host LUN Mapping

Monitor Utility 02-09-96
HOST LUN MAPPING 13:14:00
Channel 0

Host LUN	Redundancy Group	Host LUN	Redundancy Group
0	0	16	16
1	1	17	17
2	-	18	18
3	-	19	19
4	5	20	20
5	-	21	21
6	6	22	22
7	7	23	23
8	8	24	24
9	9	25	25
10	10	26	26
11	11	27	27
12	12	28	28
13	13	29	29
14	14	30	30
15	15	31	31

ARROW KEYS: MOVE CURSOR | N: NEXT CH | P: PREV CH | ENTER: SELECT | CTRL-Z: EXIT

Ex. 1004 at 4-5