IW 7416943

THE UNITED STATES OF AMERICA

TO ALL TO WHOM THESE PRESENTS SHALL COME:

UNITED STATES DEPARTMENT OF COMMERCE

United States Patent and Trademark Office

May 16, 2013

THIS IS TO CERTIFY THAT ANNEXED IS A TRUE COPY FROM THE RECORDS OF THIS OFFICE OF THE FILE WRAPPER AND CONTENTS OF:

APPLICATION NUMBER: *10/487,810*
FILING DATE: *September 10, 2004*
PATENT NUMBER: *7,145,710*
ISSUE DATE: *December 05, 2006*

By Authority of the
Under Secretary of Commerce for Intellectual Property
and Director of the United States Patent and Trademark Office

R. PONDEXTER
Certifying Officer

FNC 1017

TS0000290

(12) INTERNATIONAL APPLICATION PUBLISHED UNDER THE PATENT COOPERATION TREATY (PCT)

(19) World Intellectual Property Organization
International Bureau

(43) International Publication Date
29 November 2001 (29.11.2001)

PCT

(10) International Publication Number
WO 01/90823 A1

(51) International Patent Classification[7]: G03H 1/26, 1/12, 1/08

(21) International Application Number: PCT/US01/16174

(22) International Filing Date: 18 May 2001 (18.05.2001)

(25) Filing Language: English

(26) Publication Language: English

(30) Priority Data:
60/206,074 22 May 2000 (22.05.2000) US

(71) Applicant: INTELLIGENT PIXELS, INC. [US/US]; 100 Mill Plain Road, Danbury, CT 06811 (US).

(72) Inventors: CROSSLAND, William, Alden; 15 School Lane, Marlow, Essex CM20 2QD (GB). WILKINSON, Timothy, David; Jesus College, Jesus Lane, Cambridge CB5 8BL (GB). ESHRAGHIAN, Kamran; 23 Caldera Close, Mindarie,_W.A. 6030 (AU).

(74) Agent: RUGGIERO, Charles, N., J.; Ohlandt, Greeley, Ruggiero & Perle, L.L.P., 10th floor, One Landmark Square, Stamford, CT 06901-2682 (US).

(81) Designated States *(national)*: AE, AG, AL, AM, AT, AU, AZ, BA, BB, BG, BR, BY, BZ, CA, CH, CN, CO, CR, CU, CZ, DE, DK, DM, DZ, EE, ES, FI, GB, GD, GE, GH, GM, HR, HU, ID, IL, IN, IS, JP, KE, KG, KP, KR, KZ, LC, LK, LR, LS, LT, LU, LV, MA, MD, MG, MK, MN, MW, MX, MZ, NO, NZ, PL, PT, RO, RU, SD, SE, SG, SI, SK, SL, TJ, TM, TR, TT, TZ, UA, UG, UZ, VN, YU, ZA, ZW.

(84) Designated States *(regional)*: ARIPO patent (GH, GM, KE, LS, MW, MZ, SD, SL, SZ, TZ, UG, ZW), Eurasian patent (AM, AZ, BY, KG, KZ, MD, RU, TJ, TM), European patent (AT, BE, CH, CY, DE, DK, ES, FI, FR, GB, GR, IE, IT, LU, MC, NL, PT, SE, TR), OAPI patent (BF, BJ, CF, CG, CI, CM, GA, GN, GW, ML, MR, NE, SN, TD, TG).

Published:
— *with international search report*
— *before the expiration of the time limit for amending the claims and to be republished in the event of receipt of amendments*

[Continued on next page]

(54) Title: ELECTRO-OPTICAL COMPONENT HAVING A RECONFIGURABLE PHASE STATE

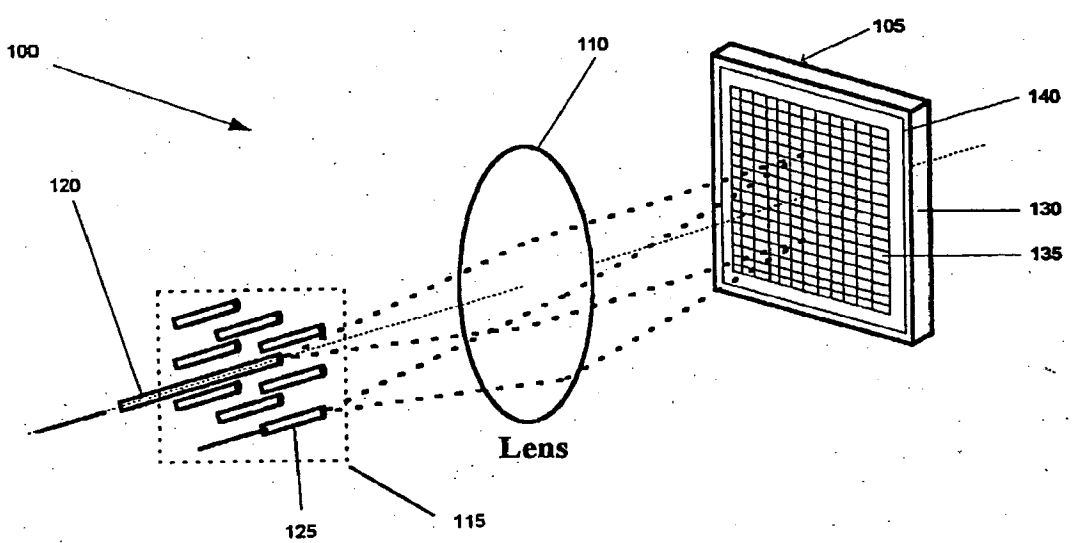

(57) Abstract: There is provided an electro-optical component comprising: a substrate (130); a phase-variable element carried on the substrate (135); a memory carried on the substrate for storing data representative of a phase state for the phase-variable element; and a controller (140) carried on the substrate, for utilizing the data and setting the phase state for the element. There also provided an electro-optical component comprising: substrate (730); a phase-variable element carried on the substrate (735); and a circuit (740) carried on the substrate for computing and applying a phase state for the phase-variable element.

WO 01/90823 A1

AL

For two-letter codes and other abbreviations, refer to the "Guidance Notes on Codes and Abbreviations" appearing at the beginning of each regular issue of the PCT Gazette.

TS0000292

ELECTRO-OPTICAL COMPONENT HAVING A RECONFIGURABLE PHASE STATE

BACKGROUND OF THE INVENTION

1. Field of the Invention

The present invention relates to an electro-optical component having a reconfigurable phase state. The component is particularly suitable for steering an optical beam. Such a component can be used in applications such as metropolitan area network (MAN) optical terabit switching/routing, all-optical cross-connect systems for dense wave division multiplexing (DWDM) networks, photonics signal processing, and free space laser communication.

2. Description of the Prior Art

One of the most critical elements within the framework of optical transport networks based on wavelength-division multiplexing is an optical cross-connect (OXC). This optical routing device provides network management in the optical layer, with potential throughputs of terabits per second. An optical cross connection may be accomplished by either a hybrid approach or by an all-optical approach.

The hybrid approach converts an optical data stream into an electronic data stream. It uses an electronic cross connection, and then performs an electrical-optical conversion. There is an inherent problem with the hybrid approach when used in a networked environment. Historically, microprocessor speed has doubled almost every 18 months, but demand for network capacity has increased at a much faster rate, thus causing a widening gap between the microprocessor speed and the volume of network traffic. The effect of this gap places a great burden on the electronic cross connections for optical links that are implemented in metropolitan and long-haul networks. Optical carrier 48 (OC-48) is one of the layers of hierarchy in a conventional synchronous optical network (SONET). The procedure of optical-

TS0000293

electrical-optical (OEO) conversion becomes more difficult as the speed of the link reaches OC-48 (2.5 Gbps), and is even more difficult at higher speeds. At such speeds, the electronic circuitry of the OEO causes a network bottleneck.

The all optical approach performs the cross connection entirely in the optical domain. The all optical approach does not have the same speed limitations as the hybrid approach. It is normally used for fiber channel, high bandwidth cross connections. Taking NxN to represent the dimension of the OXC, i.e. the number of input and output ports, then N is typically between 2 and 32 for an all optical OXC. However, larger dimension OXCs, with N up to several hundreds or even a thousand are contemplated. Many proposed optical cross-connect architectures include a set of optical space switches capable of switching a large number of input and output fibers. However, despite a significant investment for development of an all photonics OXC, it is presently a major challenge to design a reliable all photonics, non-blocking, low loss, scalable and reconfigurable optical switch, even for N in the order of 32-40.

Several different technologies have been tried for optical interconnects, but none is yet regarded as a technology or market place leader. This is due, in part, to an impracticality of the switching media or to a lack of scalability in cross-connecting a suitable number of input and output ports.

For example, guided wave systems use nonlinear electro-optic components, sometimes with diffraction effects, to couple optical signals from one fiber wave-guide to another. Prominent attention in this class of devices has been given to fiber Bragg switches and other fiber proximity coupling schemes such as devices using electro-optic effects in lithium niobite, silica or polymer based materials. A limitation of these switch mechanisms is scalability. It is difficult to construct guided wave switches greater than an 8x8 size because they use substrates of limited size. The interconnection of several small switches to construct a large switch is also impractical because of the bulkiness of optical fiber harnesses.

TS0000294

An advantage of a free-space optical switching system is that it can exploit the non-interference property of optical signals to switch a large number of optical ports. The two most common mechanisms for beam steering in this class of devices are diffraction and mechanical steering.

For mechanical beam steering devices, a good deal of development effort appears to be concentrated on mirrors using micro electro mechanical systems (MEMS). Several devices being manufactured commercially, such as the Lambda Router™ from Lucent Technologies, Inc.

Another mechanical approach that has received considerable attention is the use of micro-"bubbles", such as in the N3565A "32 x 32 Photonic Switch", offered by Agilent Technologies. In a micro-bubble system, the index of refraction of a transmission media is modified by mechanically moving a microscopic bubble in the media.

Disadvantages of a MEMS-based switch include limitations relating to mechanical, thermal and electrostatic stability. A MEMS-based switch typically requires continuous adaptive alignment to maintain a connection and its reliability is a function of that adaptive alignment. Another disadvantage of the MEMS-based switch is its optics, which typically require highly collimated optical paths, usually employing microlenses that cannot significantly diffract the light beam.

In diffractive steering, an optical signal is redirected using a phase hologram, also known as a grating or a diffraction pattern, recorded on a spatial light modulator. Several materials have been proposed for use in such systems, including III-V semiconductors such as InGaAs/InP, and liquid crystal on silicon systems (LCOS). One advantage of using direct-gap semiconductors is the ease with which active optical components, such as lasers and optical amplifiers, can be incorporated into a circuit, thus allowing the possibility of signal boosting at the switching stage. A disadvantage of such materials is the cost and difficulty of large-scale manufacturing.

SUMMARY OF THE INVENTION

It is an object of the present invention to provide an improved optical component having a variable phase state.

It is another object of the present invention to employ such a component in an optical switch in which a plurality of the components are configured in an array for phase modulating light in order to steer the light from an input port to an output port by diffraction.

It is yet another object of the present invention to provide such a switch in which the array of phase modulating components and the parallel processing capability are both carried on the same substrate.

It is a further object of the present invention to provide such a switch in which the circuit computes a reconfigurable phase pattern or hologram to optimize the performance of the switch by reducing optical losses, and to minimize the quanta of optical signal falling into adjacent channels, i.e. crosstalk.

It is yet a further object of the present invention to provide such a switch in which a hologram routes light from a single input port to a single output port, or from a single input port to multiple output ports, i.e., multicasting, or from multiple input ports to a single output port, i.e., inverse-multicasting.

These and other objects of the present invention are provided by an electro-optical component in accordance with the present invention. One embodiment provides an electro-optical component comprising (a) a substrate, (b) a phase-variable element carried on the substrate, (c) a memory carried on the substrate for storing data representative of a phase state for the phase-variable element; and (d) a controller carried on the substrate, for utilizing the data and setting the phase state for the element. Another embodiment provides an electro-optical component comprising (a)

TS0000296

a substrate, (b) a phase-variable element carried on the substrate, and (c) a circuit carried on the substrate for computing a phase state for the phase-variable element.

BRIEF DESCRIPTION OF THE DRAWINGS

Fig. 1 is a schematic representation of an optical switch in accordance with the present invention.

Figs. 2A and 2B are schematic representations of alternate embodiments of optical switches in accordance with the present invention.

Fig. 3 is an illustration showing a relationship between a hologram and its replay field.

Fig. 4 is a side-section view of a spatial light modulator, as used in an optical switch in accordance with the present invention.

Figs. 5A - 5C are illustrations of various arrangements of one or more phase-variable elements and circuitry on a substrate.

Fig. 6 is a flowchart of an algorithm for generating a hologram by projection of constraints.

Fig. 7 is a schematic representation of an optical switch in accordance with the present invention.

DESCRIPTION OF THE INVENTION

An embodiment of the present invention provides for an electro-optical component comprising (a) a substrate, (b) a phase-variable element carried on the substrate, (c) a memory carried on the substrate for storing data representative of a phase state for the phase-variable element; and (d) a controller carried on the

substrate, for utilizing the data and setting the phase state for the phase-variable element. The component can be employed in an optical switch to direct light from a first port to a second port.

Another embodiment of the present invention provides for an electro-optical component comprising (a) a substrate, (b) a phase-variable element carried on the substrate, and (c) a circuit carried on the substrate for computing a phase state for the phase-variable element. This component can also be employed in an optical switch to direct light from a first port to a second port.

In another embodiment, the optical switch includes (a) a substrate, (b) a liquid crystal carried on the substrate; and (c) a circuit carried on the substrate for computing a hologram and controlling the liquid crystal to produce the hologram to direct light from a first port to a second port.

The optical switch uses a dynamic beam steering phase hologram written onto a liquid crystal over silicon (LCOS) spatial light modulator (SLM). A phase hologram is a transmissive or reflective element that changes the phase of light transmitted through, or reflected by, the element. A replay field is the result of the phase hologram. The LCOS SLM produces a hologram, i.e., a pattern of phases, that steers light by diffraction in order to route the light from one or more input fibers to one or more output fibers.

The holograms produced on the SLM may appear as a one-dimensional or two-dimensional image. Accordingly, the image elements, whether transmissive or reflective, are sometimes referred to as "pixels", i.e., picture elements.

Fig. 7 is a schematic representation of an optical switch 700 in accordance with the present invention. The principal elements of switch 700 include an input port 705, a spatial light modulator (SLM) 715, and a plurality of output ports 725A, 725B and 725C. A first lens 710 is interposed between input port 705 and SLM 715, and a

TS0000298

second lens 720 is interposed between SLM 715 and output ports 725A, 725B and 725C.

Light from input port 705 is cast upon lens 710, which collimates the light and projects it onto SLM 715. The light travels through SLM 715 and onto lens 720, which focuses the light onto one or more of output ports 725A, 725B and 725C. A hologram produced on SLM 715 directs the light to one or more of output ports 725A, 725B and 725C. In Fig. 7, the light is shown as being directed to output port 725A.

SLM 715 is an electro-optical component that includes a substrate 730 upon which is carried (a) an element, shown in Fig. 7 as one of an array of elements 735 and (b) a circuit 740. Elements 735 have a variable phase. That is, the phase, i.e., time delay, of light propagating through elements 735 can be varied. When the phase of light propagating through an element 735 is varied relative to the phase of another element 735, the light forms an interference pattern that influences the direction in which the light travels, as is well known in the field of optics. Thus, by controlling the relative phasing, the light can be directed to a desired target. Liquid crystal is a suitable material for elements 735. Liquid crystal is conventionally provided in a thin film sheet, and as such, individuals of elements 735 would correspond to regions of the liquid crystal rather than being discrete, separate, liquid crystal elements.

Circuit 740 sets the phase states for elements 735 for directing the light from input port 705 to output port 725A. That is, a hologram is produced by elements 735. Optionally, circuit 740 also computes the hologram. In Fig. 7, the result of the hologram causes a point of light intensity at output port 725A.

Fig. 1 is a schematic representation of an optical switch 100 in accordance with the present invention. The principal components of switch 100 include a fiber array 115, an SLM 105, and a lens 110 interposed between fiber array 115 and SLM 105.

Fiber array 115 has a first port 120 and a second port 125. Light enters switch 100 via first port 120 and proceeds to lens 110, which is, for example, a Fourier lens having a positive focal length. Lens 110 collimates the light. From lens 110, the light is projected onto SLM 105. The light is reflected by SLM 105, and travels via lens 110 to second port 125. As explained below, a hologram produced on SLM 105 steers the light from first port 120 to second port 125.

SLM 105 is an electro-optical component that includes a substrate 130 upon which is disposed (a) a reflective element, shown in Fig. 1 as one of an array of reflective elements 135, and (b) a circuit 140 underneath and around reflective elements 135. Reflective elements 135 have a variable phase state That is, the phase, i.e., time delay, of light reflected by reflective elements 135 can be varied. When the light is reflected by two or more of reflective elements 135, the light forms an interference pattern that influences the direction in which the light is reflected. As the phase state of an individual reflective element 135 is variable, it can be altered relative to the phase state of other reflective elements 135 to control the direction in which the light is reflected.. A practical embodiment of array reflective elements 135 can be realized by employing a liquid crystal over an array of mirrors.

Circuit 140 controls the phase state, i.e., hologram, for reflective elements 135 to control the direction in which the light is reflected. Optionally, circuit 140 also computes the hologram. The result of the hologram is projected on fiber array 115, with points of intensity at one or more ports in fiber array 115. In Fig. 1 the light is shown as being directed from first port 120 to second port 125, however, in terms of functionality, first port 120 and second port 125 are preferably each a bi-directional input/output port.

Fig. 2A is a schematic representation of an optical switch 200 configured with two SLMs 210 and 215, to provide a greater number of ports than that of the configuration in Fig. 1. Switch 200 also includes a first fiber array 205, a second fiber array 220, and a lens array 225.

TS0000300

First fiber array 205 and second fiber array 220 are each an array of bi-directional fiber ports. Lens array 225 is a series of refractive optical elements that transfer one or more optical beams through switch 200.

Input signals in the form of light beams or pulses are projected from one or more ports in first fiber array 205, through one or more lenses of lens array 225 onto SLM 210. SLM 210 produces a first routing hologram that directs the light through one or more lenses of lens array 225 onto SLM 215. SLM 215 produces a second routing hologram that directs the light through one or more lenses of lens array 225 onto one or more ports in second fiber array 220.

SLMs 210 and 215 each have an array of phase-variable reflective elements on its surface to produce reconfigurable phase holograms that control the deflection angle of a beam of light. Thus, light from any port of first fiber array 205 can be selectively routed to any port of second fiber array 220, and vice versa.

Switch 200 accommodates fiber arrays of a substantially greater dimension than that of typical prior art switches. For example, first fiber array 205 and second fiber array 220 may each have 1000 ports.

The optical configuration of switch 200 influences the distribution of the pixels on each of SLMs 210 and 215, and the manner in which a hologram is generated thereon. For example, the optical configuration influences the size of the region on each of SLMs 210 and 215 onto which the light is projected.

Fig. 2B is a schematic representation of an optical switch 250 in another embodiment of the present invention. Switch 250 includes an input/output fiber array 230, a lens 235, e.g., a Fourier transform lens, an SLM 240 and a reflector 245.

Light from a first port 232 of input/output fiber array 230 is projected through lens 235 onto a first region 242 of SLM 240. SLM 240 produces a first hologram in first region 242 that directs the light to reflector 245, which, in turn, directs the light

TS0000301

to a second region 247 of SLM 240. SLM 240 produces a second hologram in second region 247 to direct the light through lens 235 and onto a selected second port 234 of input/output fiber array 230.

Referring again to Fig. 2A, the architecture in Fig. 2A can be made to mimic that of Fig. 2B by "folding" switch 200 about a central point. That is, the architecture of Fig. 2A approaches that of Fig. 2B by placing a mirror at the central point so that first fiber array 205 and second fiber array 220 are side by side, and SLM 210 and SLM 215 are side by side.

Fig. 3 is an illustration showing a relationship between a hologram and its replay field as can be provided by the optical switch of the present invention. Referring again to Fig. 2A for example, a reconfigurable phase hologram 305 is situated at a Fourier plane, e.g., on the array of phase-variable reflective elements at the surface of SLMs 210 and 215. In the preferred embodiment, phase hologram 305 is written into, that is, programmed into, the reflective elements to provide phase-only modulation of the incident light. The reflective elements diffract the light from first fiber array 205 to produce phase hologram 305. After a Fourier transform of the hologram, a resulting diffracted pattern, also known as a replay field 310, is produced at second fiber array 220.

Note that replay field 310 shows 16 points of light. Fig. 3 illustrates a feature of the present invention called multicasting. In a multicast, one input port is coupled to two or more output ports, i.e., simultaneous routing of light from one input port to a plurality of output ports. This can be done with a hologram that generates multiple peaks, as shown in replay field 310, rather than a single peak. Fig. 3 shows an example of a 1 to 16 multicast hologram. In a similar fashion, the same set of holograms can also be used to route multiple input ports to a single output port, referred to as multiplexing, provided that the inputs have different wavelengths. This can be used for wavelength division multiplexing (WDM).

TS0000302

Fig. 4 shows a cross section of an exemplary SLM 400 in accordance with the present invention. The principal features of SLM 400 are a substrate 410 that carries (a) a silicon die 405 containing a circuit 406, (b) an array of mirrors 407, and (c) a liquid crystal element 415, which has a variable phase state. In Fig. 4, SLM 400 is configured to show liquid crystal element 415 positioned upon array of mirrors 407, which is positioned upon circuit 406. However, any convenient arrangement of these components is contemplated as being within the scope of the present invention.

The phase shift of light through liquid crystal element 415 is varied, or set for a specific value, by applying an electric field across liquid crystal element 415. Circuit 406 controls the phase state of liquid crystal element 415 by applying voltages to the array of mirrors 407 and thus developing the electric field across liquid crystal element 415. In practice each mirror 407 influences the phase state of a region of liquid crystal element 415 to which the mirror is adjacent. Thus, circuit 406 controls the phase state of a plurality of regions of liquid crystal element 415 by controlling the individual voltages applied to each of mirrors 407.

Circuit 406 executes the processes described herein, and it may include one or more subordinate circuits for executing portions of the processes or ancillary functions. In one embodiment of the present invention, circuit 406 includes a memory for storing data representative of a plurality of configurations of phase state for liquid crystal element 415, and a controller for utilizing the data and setting the phase states by applying signals to mirrors 407. Such data can be determined by an external system in a calibration procedure during manufacturing of SLM 400, or during manufacturing of an assembly in which SLM 400 is a component. The external system computes the phase states, and thereafter, the data is written into the memory of circuit 406. In another embodiment, circuit 406 includes a processor and associated memory for storing data in order to compute the phase states locally, and a controller to set the phases states by applying signals to mirrors 407.

TS0000303

SLM 400 also includes, on top of liquid crystal elements 415, a glass cover 420. Glass cover 420 has a layer 435 of Indium Tin Oxide (ITO) to provide a return path conductor for signals from circuit 406 via bond wires 425.

On the optical side of SLM 400, the array of mirrors 407 allows for steering of a light beam by producing a hologram using variable phase liquid crystal elements 415. In circuit 406, the following functionalities can be implemented:

- DC balance schemes including shifting and scrolling;
- Algorithms for reconfigurable beam steering and hologram generation;
- Generation of multicast hologram patterns;
- Hologram tuning for crosstalk optimization;
- Hologram tuning for adaptive port alignment;
- Phase aberration correction; and
- Additional processing of various network traffic parameters.

Figs. 5A - 5C illustrate several viable arrangements of phase-variable elements and circuitry on the SLM of the present invention. Fig. 5A illustrates a die-based arrangement with a substrate 505 carrying circuitry 510 around and/or underneath an array of phase-variable elements 515. The array of phase-variable elements 515 is partitioned into several subsets of phase-variable elements (515A, 515B, 515C and 515D), each operating as an independent SLM. Fig. 5B shows a substrate 519 carrying several groups of components, namely, circuitry 520A, 520B, 520C and 520D, and an array of phase-variable elements 525A, 525B, 525C and 525D, respectively. Fig. 5C shows an individual phase-variable element 535 and circuitry 530 for controlling phase-variable element 535.

In Fig. 5A, circuit 510 controls the operation of the full array of phase-variable elements, that is, each of 515A, 515B, 515C and 515D. Fig. 5A illustrates an arrangement in which four holograms can be simultaneously produced, i.e., one for each of subsets 515A, 515B, 515C and 515D. Circuit 510 computes a first phase state for subset 515A to direct a first light beam from a first port to a second port, and

TS0000304

computes a second phase state for subset 515B to direct a second light beam from a third port to a fourth port. Similarly for subsets 515C and 515D, circuit computes respective phase states for routing of a third light beam and a fourth light beam. Because the phase states of the individuals in the array phase-variable elements 515 are individually reconfigurable, circuit 510 can determine which of phase-variable elements 515 are members of the first subset 515A, which of phase-variable elements 515 are members of the second subset 515B, and likewise, which of phase-variable elements 515 are members of the subsets 515C and 515D. In Fig. 5A, subsets 515A, 515B, 515C and 515D can be located adjacent to one another, or alternatively they can be spaced apart from one another by a region of substrate 505 that does not include any phase-variable elements.

An appropriate dimension for an array of phase-variable elements, i.e., pixels, per hologram, is about 100 x 100 pixels for good Gaussian beam performance. Accordingly, an array of 600 x 600 pixels provides for 36 holograms. However, the present invention is not limited to any particular dimension for the array, nor is it limited to any particular number of phase-variable elements or any arrangement of phase-variable elements. Theoretically, some beam steering functionality can be achieved with as few as two phase-altering elements, only one of which needs to have a variable phase. Furthermore, the phase-variable elements do not need to be arranged in an array, per se, as any suitable arrangement is contemplated as being within the scope of the present invention.

Referring again to Fig. 5B, a gap 526 is a region of substrate 519 that does not include any phase-variable elements. Gap 526 is located between phase-variable elements 525B and 525D, and thus prevents crosstalk between the holograms of phase-variable elements 525B and 525D.

The arrangement shown in Fig. 5A can deal with crosstalk in a manner different from that of Fig. 5B. In Fig. 5A, pixel subset 515A includes a region of pixels 516A upon which a hologram is produced. Pixel subset 515A also includes a subset of pixels 517A positioned along a peripheral edge of subset 516A. Subset

517A is thus a buffer region for preventing crosstalk between the hologram of subset 515A, and the holograms of subsets 515B and 515C.

Also, as those skilled in the art will appreciate, a hologram is shift invariant, that is the same replay field is generated for any shifted position of the hologram. Thus, as a further improvement, the phases of the pixels in subset 517A are set by circuit 510 to take advantage of the shift invariant property of the hologram such that a misalignment of the light beam incident on subset 515A will nevertheless produce the desired hologram. Therefore, provided that the misalignment is within a predetermined tolerance, i.e., such that the incident light falls within the bounds of subset 515A, the hologram is produced notwithstanding a misalignment of the light from an input port.

To take further advantage of the reconfigurable capability of the optical switch, circuit 510 receives a signal that represents whether light is being directed to a particular port. This feature enables circuit 510 to perform an adaptive optical alignment, where circuit 510 receives an input signal indicating that the light is to be directed from a first port to a second port. Circuit 510 locates the second port and then optimizes the hologram to minimize switch loss and crosstalk. For example, assume that pixel subset 515A is selected to direct light from the first port to the second port. Circuit 510 determines a position of the second port by successively recomputing the phase state for pixel subset 515A to successively redirect the light, and by successively evaluating the signal to determine whether the light is aligned with the second port.

A hologram can be calculated to route light to any position in the replay field. Hence, there are more positions to which the light can be routed in the replay field than there are pixels in the hologram. A hologram can be designed with a higher resolution replay field than the original hologram, creating a near continuous number of possible port positions at the output. This means that if a hologram, at first, directs light such that the light slightly misses a desired port, the hologram can be tuned or adjusted so that the desired port is hit and optimum coupling is achieved.

For example, circuit 510 computes a routing hologram for a port and then adjusts the hologram to minimize crosstalk. Thus, in a case where light is intended to be directed to a particular second port, circuit 510 computes the phase state for phase-variable elements 515 to minimize a level of stray light directed to ports other than the particular second port. Circuit 510 gradually changes the state of a few holograms and monitors a signal that indicates whether light is being received by ports other than the intended second port. Circuit 510 selects an appropriate hologram so that noise introduced by crosstalk into ports other than the intended second port is reduced.

The reconfigurable capability also permits for compensation for misalignment of the light beam projected onto an SLM from an input port. Circuit 510 determines a subset of phase-variable elements upon which the light from a first port is incident, and also determines a position of a desired second port to which the light is to be routed, and computes a suitable hologram to achieve that routing. That is, circuit 510 relocates the position of the hologram about a small area to aid in the alignment process. For example, in Fig. 5A, assume that in subset 515A a hologram is ideally produced by subset 516A, but the input beam is instead incident on subset 518A. Consequently, the level of light directed to the output port is lower than the optimum level. Accordingly, circuit 510 computes the phases of the pixels in subset 517A so that the hologram is produced by the elements of subset 518A, and thus the coupling of light from the input port to the output port is improved. In the computation, the circuit also considers parameters such as signal loss, crosstalk and wavelength. Circuit 510 also adaptively alters the hologram to control the deflection of a light signal to minimize fiber to fiber insertion loss.

An important consideration when operating a liquid crystal device is DC balancing. DC balancing ensures that the liquid crystal material is not subjected to a net DC electric field for more than some predetermined period of time, for example 1 or 2 minutes, before the field is reversed and DC balanced. For root-mean-square (RMS) responding liquid crystals such as nematics, DC balancing is inherent in an

applied AC field, but for liquid crystals such as ferroelectrics, DC balancing is more difficult, as reversing the field reverses the orientation of the molecules.

A port to port connection may be continuously maintained for a long period of time. That is, minutes, days, months or, in a case of a protection or latency switch, years. Good design practice permits a maximum allowable disturbance to the power through the switch of 0.1dB, hence frame inversion schemes cannot be used. On the other hand, because a hologram is shift invariant, the same replay field is generated for any shifted position of the hologram.

Circuit 510 employs a shifting and scrolling scheme using the invariance property of the hologram to perform DC balancing. Circuit 510 gradually shifts the hologram, changing the average state of the pixels, so that over several hundred frames, the net field is zero. Thus, circuit 510 balances the electric field across the liquid crystal elements to yield an average value of approximately zero volts. DC balancing must avoid changing too many pixels in the hologram at each frame update. Accordingly, the image is only partially shifted, in sections, to avoid a glitch of more then 0.1dB per frame change.

Referring for example to Fig. 5A, each phase-variable element 515 has a series of interconnected paths defined within circuit 510 that dictates how the hologram pattern will be scrolled over multiple frames. In one embodiment the scrolling sequence depends on hardwire connections in circuit 510. In an alternative embodiment, a programmable scrolling system permits variable connections between the pixels such that each pixel can be changed to allow different scrolling schemes to be implemented to suit a particular application of the switch.

The present invention can employ any suitable hologram design algorithm, for example including, but not limited to:

(a) direct calculation from a blazed grating or Bragg diffractive angle,

(b) direct calculation from a quantized ideal phase profile,

(c) optimization by direct binary search,

TS0000308

(d) optimization by simulated annealing (Boltzmann annealing),

(e) optimization by a genetic algorithm, and

(f) optimization by constrained projection (Gerchberg-Saxton).

One technique for determining a hologram is by direct calculation from a quantized ideal phase profile. The ideal phase profile is obtained from the inverse Fourier transform of the replay field. The continuous phase profile is then quantized to the limited set of phase levels available.

A hologram can be calculated directly from the desired replay field via a Fourier transform, however the resulting hologram is a complex function of both amplitude and phase. The hologram h(x,y) is matched to the replay field H(u,v) via a Fourier transform such that:

$$H(u,v) = F_T[h(x,y)]$$

Once a hologram has been generated it can be evaluated by considering the loss to the routed port and the crosstalk to the unrouted ports, as well as the range of wavelengths that can be routed for less than a 0.1dB loss variation. If the above-noted hologram is used, then the performance will be optimized in all respects. However, there is currently no technology capable of displaying this hologram in a real switch, and therefore it must be quantized. The hologram can be represented as having an amplitude and phase component.

$$H(u,v) = H_{amp}(u,v)e^{i\phi(u,v)}$$

An efficient hologram can be made by using just the phase information, as the amplitude does not contain much useful information for simple holographic replay fields. The present invention may use a phase only hologram:

$$H_{PO}(u,v) = e^{i\phi(u,v)}$$

For a single port routing hologram, the information in the replay field, i.e., just one spot, is closely related to phase function, which means that the phase only quantization required for liquid crystal technology is very robust. The continuous structure of the phase hologram, $\phi(u,v)$ means that it cannot easily be displayed in an optical system using current SLM technology. There are techniques that can be used to display either 4-level or 8-level phase only holograms, therefore the technique used to quantize the phase to those number of levels is very important.

The benefits of using multi-level phase are significant, especially in terms of loss and crosstalk. A binary phase hologram can only have a maximum efficiency of 41%, i.e., insertion loss of 4dB, due to the symmetry that must be satisfied in the replay field. It is impossible to generate an asymmetric replay field with binary phase, hence half the light will always be wasted in the symmetry. If 4 levels of phase are used, then the attainable efficiency increases to 87% due to the breaking of the symmetry in the replay field, however, because of the structured noise generated by the 4-level quantization process, the crosstalk may not yet be ideal. 8-level phase modulation is preferred, as it allows a maximum efficiency of 93% and also generates much less structure in the noise, due to the lower degree of quantization required.

Another technique of displaying a hologram in a polarization insensitive manner is to use an FLC SLM to generate a binary phase hologram. A binary phase hologram can be generated by optimization, by direct calculation or by quantization of the phase only hologram. The technique of quantization most be chosen carefully to prevent sever distortion of the hologram replay field. The binary phase is selected from the phase only hologram by two thresholds δ_1 and δ_2. The thresholding is done such that:

$$H_{BPO} = \begin{cases} 0 & \delta_1 \le \phi(u,v) \le \delta_2 \\ \pi & \text{Otherwise} \end{cases}$$

The selection of the two boundaries is by exhaustive searching, as it depends on the shape and structure of the desired replay field. The benefits of this search process are not significant and it is only likely to improve the performance by a few percent. A safe threshold that provides consistent results is $\delta_1 = -\pi/2$, $\delta_2 = \pi/2$. More sophisticated thresholding techniques such as convolutional kernels and adaptive thresholds also give good results.

The hologram can be determined by direct calculation from the Bragg angle. A beam steering hologram for a single port can be modeled ideally as a Bragg grating of pitch d that generates a diffracted beam at an angle θ such that.

$$\text{Sin } \theta = md/\lambda$$

where m is integer diffracted order and is usually set at $m = 1$. The Blazed grating that is required to generate this angle is difficult to generate using a liquid crystal modulating technology due to its continuous phase profile. A quantized approximation of this blazed grating must be produced to generate a feasible routing hologram. This quantization algorithm can be incorporated into the circuit of the present invention.

A quantity of n pixels on the hologram can be combined to generate an approximation to a blazed grating. This process is fairly accurate and straightforward for a multi-level phase hologram, but is not so simple for a binary approximation. For a given n pixels per period, there are hundreds of combinations of pixels that will give similar routing performance to the desired port, but different noise fields and therefore different crosstalk values.

The present invention can compute a hologram using optimization by simulated annealing or direct binary search (DBS). There is no simple way of generating a hologram for other than simple cases such as gratings and checkerboards. In order to create a hologram that generates an arbitrary replay field, a more sophisticated algorithm is needed, especially if more advanced features such as

crosstalk and multicasting are considered. To achieve this, the present invention uses optimization techniques such as simulated annealing or DBS.

The technique of DBS involves taking a hologram of random pixel values and calculating its replay field. The technique then flips the binary value of a randomly positioned pixel and calculates the new replay field. The technique then subtracts the two replay fields from the target replay field, sums the differences to form a cost function for the hologram before and after the pixel change. If the cost function after the pixel has been flipped is less than the cost function before the pixel was flipped, then the pixel change is considered to be advantageous and it is accepted. The new cost function is then used in comparison to another randomly chosen flipped pixel. This process is repeated until no further pixels can be flipped to give an improvement in the cost function.

The procedure for direct binary search is summarized as follows:

(1) Define an ideal target replay field, T (desired pattern).
(2) Start with a random array of binary phase pixels.
(3) Calculate its replay field (FT), H_0.
(4) Take the difference between T and H_0 and then sum up to make the first cost, C_0.
(5) Flip a pixel state in a random position.
(6) Calculate the new replay field, H_1.
(7) Take the difference between T and H_1, then sum up to make the second cost, C_1.
(8) If $C_0 < C_1$ then reject the pixel flip and flip it back.
(9) If $C_0 > C_1$ then accept the pixel flip and update the cost C_0 with the new cost C_1.
(10) Repeat steps 5 through 9 until $|C_0 - C_1|$ reaches a minimum value.

More sophisticated techniques are required to fully exploit the possible combinations of pixel values in the hologram. One such algorithm is simulated

annealing, which uses DBS, but also includes a probabilistic evaluation of the cost function that changes as the number of iterations increases. The idea is to allow the hologram to 'float' during the initial iteration, with good and bad pixel flips being accepted. This allows the optimization to float into a more global minima rather than resulting in a local minima as is the case with DBS.

An alternative technique for optimizing a hologram is to use the Genetic Algorithm (GA), which will converge to multiple solutions much quicker than DBS and simulated annealing. The GA is based on real evolution in biological systems, often referred to 'survival of the fittest'. The concept behind the GA is to use a controlled mutation to evolve a generation of solutions and then select the best to be further mutated towards an optimal family of solutions. The GA can be implemented at the pixel level in the present invention. It also advantageously generates a whole family of optimal solutions, which could provide diversity in crosstalk and wavelength performance.

In the GA, members of a next generation are selected based on a probability proportional to their fitness. The expectation is that this process will eventually converge to yield a population dominated with the global maximum of fitness function. The algorithm typically starts with a pool of randomly generated arrays. It then evaluates the cost function, which is based on the mean square error, associated with each of these and discards those with worst cost value. It then randomly takes two of the arrays out of the remaining pool and uses them as parents. An offspring is created by randomly mixing the values from each parent. This offspring is then randomly altered, i.e., mutated, and a new cost function is evaluated. The above steps are repeated until no further improvement in the cost function can be detected. The aim of the design is to produce a desired target function g' at the output plane. The cost function, which is a measure of the fitness of the final result, can be defined as:

$$C = \{|g|^2 - |g'|^2\}^2$$

where g is the calculated output and g' is the desired target function or replay field. The aim of optimization is to minimize the cost function and obtain a solution as close as possible to the desired target.

Different schemes can be used for the mutation and crossover. For instance, a straight method of breeding would entail splitting the parents at random points and then splicing them to obtain the offspring. However, alternative methods can be used in order to utilize the whole area of parents. Alternative approaches can also be applied to the mutation process, such as random pixel changes each cycle, e.g., for a binary case this would be changing a 1 to –1. Alternatively they can be done based on a probability where the mutation probability can be set to:

$$p = p_0(1/IT)^r$$

Where r and p_0 are parameters that depend on algorithm, and IT is the number of iterations. The number of bits to be mutated is determined by mutation probability multiplied by size of the object function:

$$N_{mutation} = p \times N$$

In practice the bit to be mutated is also chosen randomly. The process is summarized as follows:

(1) Start - select a random population of M member functions and evaluate their cost;
(2) Reproduce - select L (L<M) samples with lower values of cost function, and discard the rest;
(3) Crossover - make crossover between the L seeds to produce M-1 offspring;
(4) Mutation - mutate the offspring by randomly changing the phase of elements;

(5) Evaluation - evaluate the cost function for the new offspring; and

(6) Iteration - iterate steps (2) through (5) until the value of the cost function can not be reduced.

More sophisticated algorithms such as projection of constrained sets, also known as the Gerchberg-Saxton algorithm, can also be used to generate holograms. This algorithm operates on an entire hologram array, however it is a fairly complex mathematical process and involves the use of the fast Fourier transform (FFT). Assuming an optical system with an illumination profile of $I_a(x,y) = a^2(x,y)$, and also assuming a desire to generate a phase only hologram $\psi(x,y)$, then in the replay field of the hologram there is a desired intensity distribution $I_b(u,v) = b^2(u,v)$ with an associated phase of $\phi(u,v)$, which is usually left as a free parameter in the iterative process. The process begins with the specification of the desired distribution $b(u,v)$ and an estimate of $\phi(u,v)$.

Fig. 6 is a flowchart of an algorithm for generating a hologram by projection of constrained sets. The algorithm begins with step 605.

In step 605, the algorithm sets the desired output replay field magnitude, b, as well as an initial replay field phase profile, ϕ which may be generated randomly. Thereafter, the algorithm progresses to step 610.

In step 610, the algorithm computes a value for the complex replay field, F, from b and ϕ. Thereafter, the algorithm progresses to step 615.

In step 615, the algorithm computes the fast inverse fourier transform (IFFT) of the complex output optical field to obtain a value for the hologram plane complex optical field, f. Thereafter, the algorithm progresses to step 620.

In step 620, the algorithm extracts the phase profile from the hologram plane complex optical field and based on the quantization levels available in the hologram,

calculates a quantized phase profile Ψ. Thereafter, the algorithm progresses to step 625.

In step 625, the algorithm computes a new value for the hologram plane complex optical field, f, based on the quantized phase profile. Thereafter, the algorithm progresses to step 630.

In step 630, the algorithm computes the fast fourier transform (FFT) of the hologram plane complex optical field to obtain a new value for complex optical relay field, F'. Thereafter, the algorithm progresses to step 635.

In step 635, the algorithm extracts the magnitude of the replay field and compares it with the desired target b. If the difference between the replay field magnitude and the desired target is less than a pre-determined value, then the algorithm progresses to step 640, otherwise the algorithm extracts a new value for the phase profile ϕ, and loops back to step 610, for another round of optimization.

In step 640, the algorithm terminates.

The iterative process of Fig. 6 is defined by the two constraints in the system. The replay field constraint is to generate the desired intensity distribution $I_b(u,v)$ and the constraints in the hologram plane are both the input illumination $I_a(x,y)$ and the restrictions on the phase only hologram $\psi(x,y)$ due to the required phase quantization, e.g., binary, 4-level phase, or 8-level phase.

In a practical optical implementation of an optical switch, there are several tradeoffs that must be made between switch performance, optical componentry and opto-mechanics. An example of this is the phase term generated when an object is not placed in the focal plane of a Fourier transform lens. If an object, such as a hologram, $s(x,y)$ is placed a distance d from the focal plane of a positive lens with a focal length f, then a spherical phase error term is added to the Fourier transform of the object:

$$S(u,v)=\frac{e^{jf\lambda\left(1-\frac{d}{f}\right)(u^2+v^2)}}{j\lambda f}F_T\left[s(x,y)\right]$$

The spherical phase term denoted by the exponential term in the fraction of this equation can lead to aberrations in the rest of the optical components as well as poor launch efficiency into the fiber at the output. However, this phase error can be calculated or determined by optical simulation with either direct analysis or by using a ray tracing software package. Once the error is known, it can be incorporated into the hologram design algorithm and the hologram can be made to compensate, and therefore correct, for the phase error. This phase error correction can also be implemented within the circuit of the present invention. By including the phase error among the parameters processed by the circuit, the phase error can be evaluated as part of the hologram calculation algorithm. Accordingly, circuit 510 receives a signal that represents a phase error of light at an output port, and in response to the signal, computes the phase state for the phase-variable elements 515 to correct for the phase error.

The optical switch of the present invention can also arbitrate between selected output ports. Referring again to Fig. 5A, each of pixel array subsets 515A, 515B, 515C and 515D can be controlled to generate a routing hologram for any specified output port or, in the case of a multicast, any set of a plurality of output ports. Accordingly, circuit 510 contains the routing information for all possible routing configurations.

Circuit 510 receives an input signal, i.e. a port allocation signal, indicating that light is to be directed from a particular first port to a particular second port. Such a port allocation signal will originate from a source external to the optical switch. The external source may not necessarily be aware of all the port allocation assignments that have been sent to the optical switch. If circuit 510 receives a port allocation signal specifying a particular output port, and if that output port is already dedicated

to a different routing configuration, then a clash will occur unless arbitration is employed. In the case of a clash, circuit 510 can take two possible courses of action.

(i) If there is a clash between output ports, then circuit 510 will provide a flag or other output signal indicating that a port contention has occurred. An upper layer of a network control structure can use this output signal.

(ii) If a clash occurs, then circuit 510 re-routes the light to an alternative unused output port, i.e., a third port. Circuit 510 will also issue an output signal indicating that the re-routing has occurred. An upper layer of a network control structure can use this output signal.

It should be understood that various alternatives and modifications can be devised by those skilled in the art. The present invention is intended to embrace all such alternatives, modifications and variances that fall within the scope of the appended claims.

TS0000318

WHAT IS CLAIMED IS:

1. An electro-optical component comprising:
a substrate;
a phase-variable element carried on said substrate;
a memory carried on said substrate for storing data representative of a phase state for said phase-variable element; and
a controller carried on said substrate, for utilizing said data and setting said phase state for said phase-variable element.

2. An electro-optical component comprising:
a substrate;
a phase-variable element carried on said substrate; and
a circuit carried on said substrate for computing a phase state for said phase-variable element.

3. An optical switch comprising:
a substrate;
a phase-variable element carried on said substrate;
a memory carried on said substrate for storing data representative of a phase state for said phase-variable element; and
a controller carried on said substrate for utilizing said data and setting said phase state for said phase-variable element to direct a light from a first port to a second port.

4. An optical switch comprising:
a substrate;
a phase-variable element carried on said substrate; and
a circuit carried on said substrate for computing a phase state for said phase-variable element to direct a light from a first port to a second port.

TS0000319

5. The optical switch of claim 4, wherein said circuit sets said phase state for said phase-variable element to direct a light from a first port to a second port.

6. The optical switch of claim 4, wherein said phase-variable element comprises a region of a liquid crystal.

7. The optical switch of claim 4, further comprising a mirror carried on said substrate for reflecting said light through said phase-variable element.

8. The optical switch of claim 4,
wherein said phase-variable element is one of a plurality of phase-variable elements carried on said substrate, and
wherein said circuit computes a phase state for said plurality of phase-variable elements to direct said light from said first port to said second port.

9. The optical switch of claim 8, wherein said circuit sets said phase state for said plurality of phase-variable elements.

10. The optical switch of claim 8, wherein said plurality of phase-variable elements comprises a plurality of regions of a liquid crystal.

11. The optical switch of claim 10, wherein said circuit balances an electric field across said plurality of regions of said liquid crystal to yield an average value of approximately zero volts.

12. The optical switch of claim 8, wherein said second port is one of a plurality of ports to which said plurality of phase-variable elements can direct said light.

13. The optical switch of claim 12, wherein said circuit computes said phase state for said plurality of phase-variable elements to minimize a level of stray light directed to said plurality of ports other than said second port.

BNSDOCID: <WO 01908234A1 >

14. The optical switch of claim 12, wherein said circuit computes said phase state for said plurality of phase-variable elements to simultaneously direct said light to another of said plurality of ports.

15. The optical switch of claim 8, wherein said plurality of phase-variable elements is configured in an array.

16. The optical switch of claim 8, wherein said plurality of phase-variable elements directs said light by diffracting said light.

17. The optical switch of claim 8, wherein said plurality of phase-variable elements directs said light by phase modulating said light.

18. The optical switch of claim 17, wherein said phase modulating produces a one-dimensional or two-dimensional image on said plurality of phase-variable elements.

19. The optical switch of claim 8, wherein said phase state for said plurality of phase-variable elements is a hologram displayed on said plurality of phase-variable elements.

20. The optical switch of claim 19, wherein said hologram is computed from an algorithm selected from the group consisting of:

(a) direct calculation from a blazed grating or Bragg diffractive angle,

(b) direct calculation from a quantized ideal phase profile,

(c) optimization by direct binary search,

(d) optimization by simulated annealing (Boltzmann annealing),

(e) optimization by a genetic algorithm, and

(f) optimization by constrained projection (Gerchberg-Saxton).

21. The optical switch of claim 8,

wherein said circuit receives a signal that represents whether said light is being directed to said second port, and

wherein said circuit computes said phase state for said plurality of phase-variable elements to align said light with said second port, in response to said signal.

22. The optical switch of claim 21, wherein said circuit determines a position of said second port by successively recomputing said phase state for said plurality of phase-variable elements to successively redirect said light, and by successively evaluating said signal to determine whether said light is aligned with said second port.

23. The optical switch of claim 8,

wherein said circuit receives a signal that represents a phase error of said light at said second port, and

wherein said circuit computes said phase state for said plurality of phase-variable elements to correct for said phase error, in response to said signal.

24. The optical switch of claim 8, wherein said first port is one of a plurality of ports from which said plurality of phase-variable elements can direct light to said second port.

25. The optical switch of claim 24, wherein said circuit computes said phase state for said plurality of phase-variable elements to direct light from another of said plurality of ports to said second port.

26. The optical switch of claim 8, wherein said first port and said second port are each a bi-directional input/output port.

27. The optical switch of claim 8,

wherein said first port and said second port are two of a plurality of ports between which said light can be directed by said plurality of phase-variable elements, and

TS0000322

wherein said circuit receives an input signal indicating that said light is to be directed from said first port to said second port.

28. The optical switch of claim 27, wherein said circuit issues an output signal indicating a port contention, if said second port is in use when said circuit receives said input signal.

29. The optical switch of claim 27, wherein said circuit computes said phase state for said plurality of phase-variable elements to direct said light from said first port to a third port, if said second port is in use when said circuit receives said input signal.

30. The optical switch of claim 29, wherein said circuit issues an output signal indicating that said light is being directed to said third port, if said second port is in use when said circuit receives said input signal.

31. The optical switch of claim 8,

wherein said phase state for said plurality of phase-variable elements is a hologram displayed on said plurality of phase-variable elements,

wherein said plurality of phase-variable elements are in an arrangement such that said hologram is produced notwithstanding a misalignment of said light from said first port, and

wherein said misalignment is within a predetermined tolerance.

32. The optical switch of claim 31, wherein said plurality of phase-variable elements includes a subset of said plurality of phase-variable elements positioned along a peripheral edge of said arrangement to utilize a shift invariant property of said hologram.

33. The optical switch of claim 8,

wherein said phase state for said plurality of phase-variable elements is a first phase state for a first subset of said plurality of phase-variable elements, and

wherein said circuit computes a second phase state for a second subset of said plurality of phase-variable elements for directing light from a third port to a fourth port.

34. The optical switch of claim 33, wherein said circuit determines (a) which of said plurality of phase-variable elements are members of said first subset and (b) which of said plurality of phase-variable elements are members of said second set.

35. The optical switch of claim 33, wherein said first subset is immediately adjacent to said second subset.

36. The optical switch of claim 33, wherein said first subset is spaced apart from said second subset by a region of said substrate that does not include any of said plurality of phase-variable elements.

37. The optical switch of claim 8,

wherein said phase state for said plurality of phase-variable elements is a first phase state for a first subset of said plurality of phase-variable elements, and

wherein said optical switch further comprises a second circuit for computing a second phase state for a second subset of said plurality of phase-variable elements for directing light from a third port to a fourth port.

38. The optical switch of claim 37, wherein said first subset is spaced apart from said second subset by a region of said substrate that does not include any of said plurality of phase-variable elements.

TS0000324

39. The optical switch of claim 8, wherein said circuit determines a subset of said plurality of phase-variable elements upon which said light from said first port is incident.

40. The optical switch of claim 8, further comprising a lens for collimating said light interposed between said first port and said plurality of phase-variable elements.

41. The optical switch of claim 8, further comprising a lens for focusing said light interposed between said plurality of phase-variable elements and said second port.

42. An optical switch comprising:

a substrate;

a liquid crystal carried on said substrate; and

a circuit carried on said substrate for (a) computing a hologram and (b) controlling said liquid crystal to produce said hologram to direct a light from a first port to a second port.

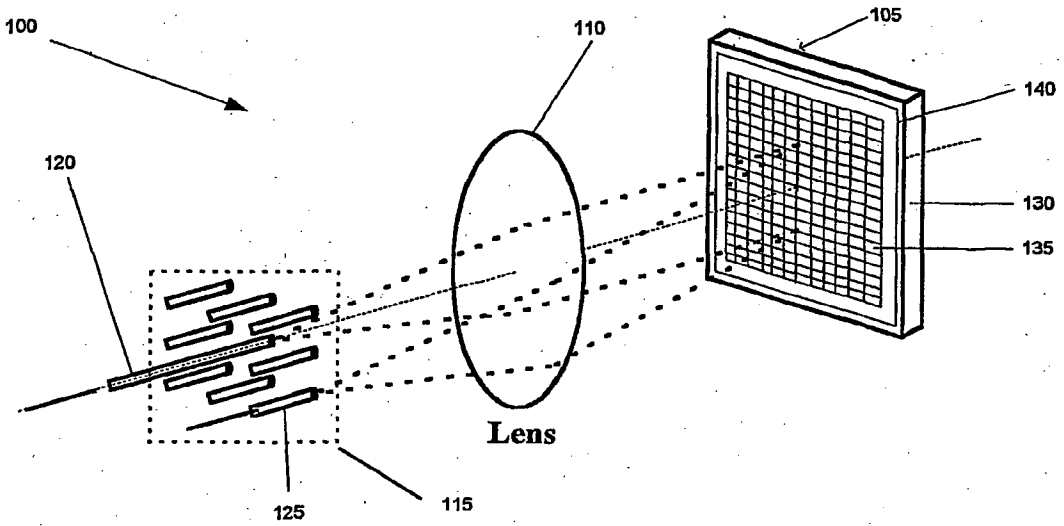

FIG. 1

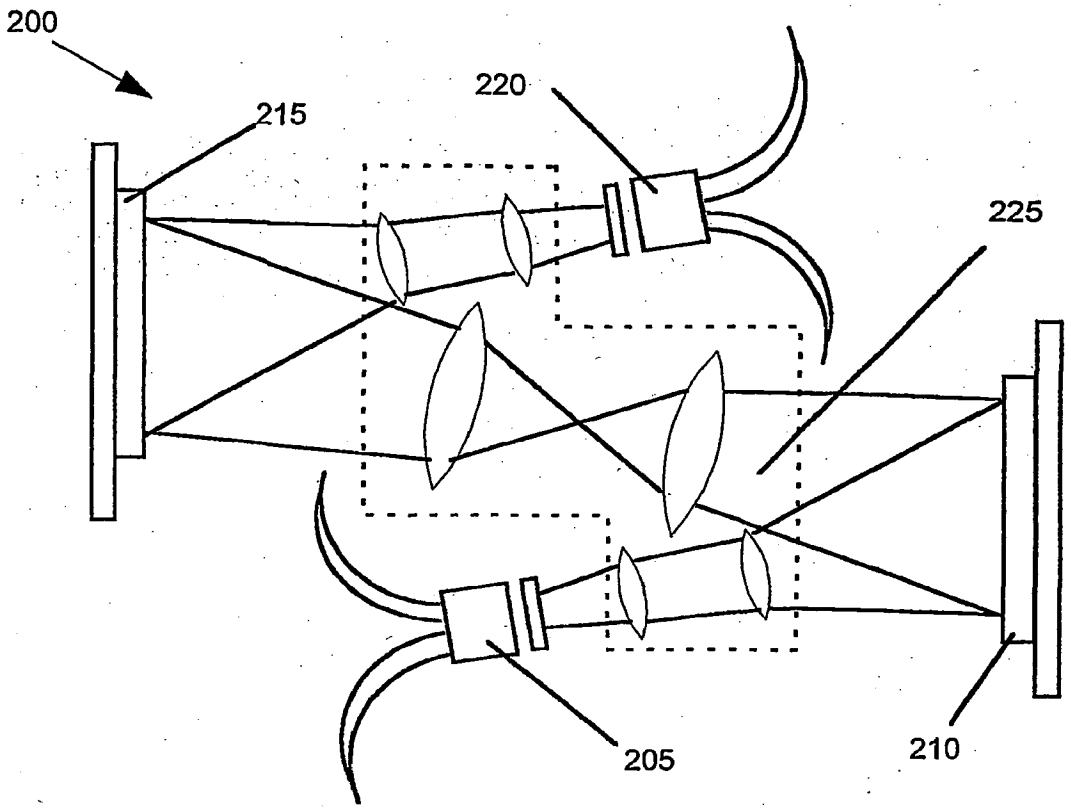

FIG. 2A

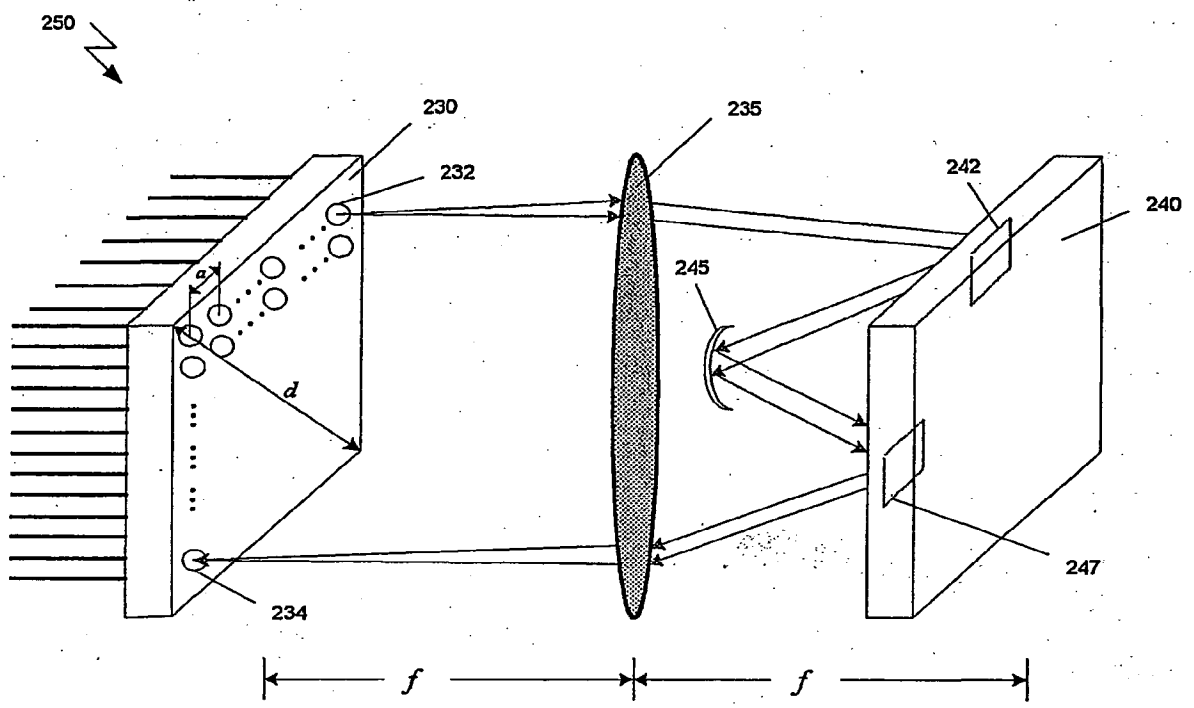

FIG. 2B

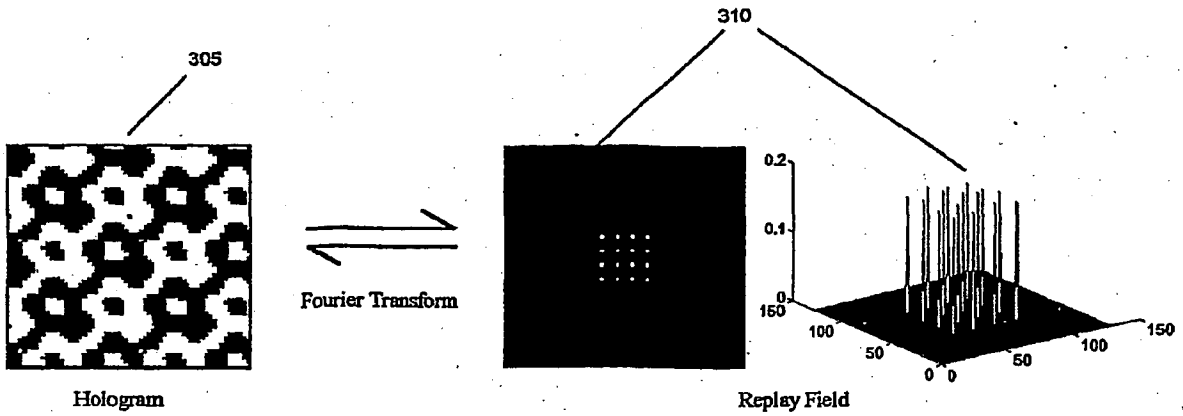
305
310
Fourier Transform
0.2
0.1
0
150
100
50
0
0
50
100
150
Hologram
Replay Field

FIG. 3

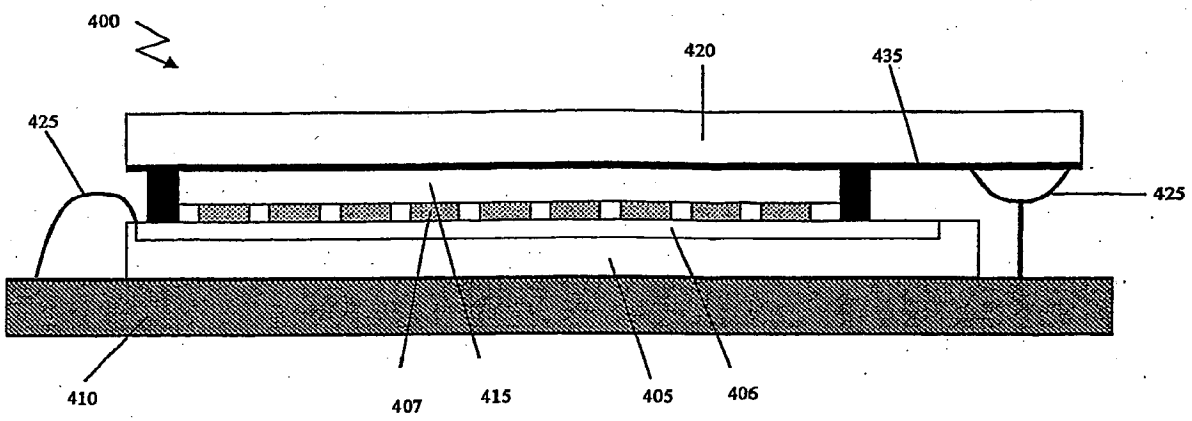

FIG. 4

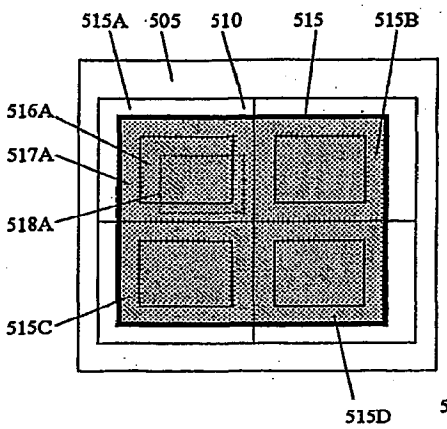

FIG. 5A

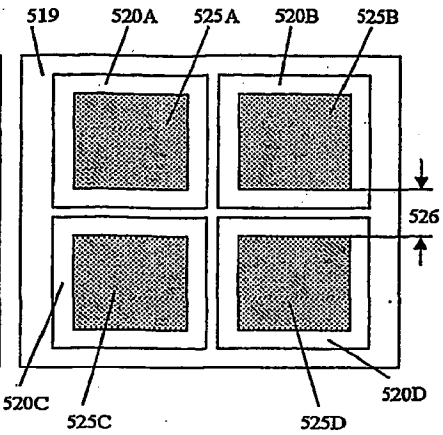

FIG. 5B

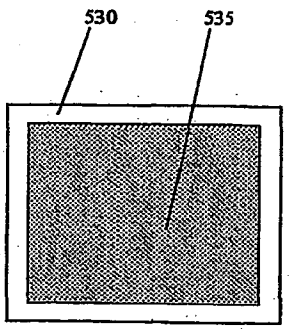

FIG. 5C

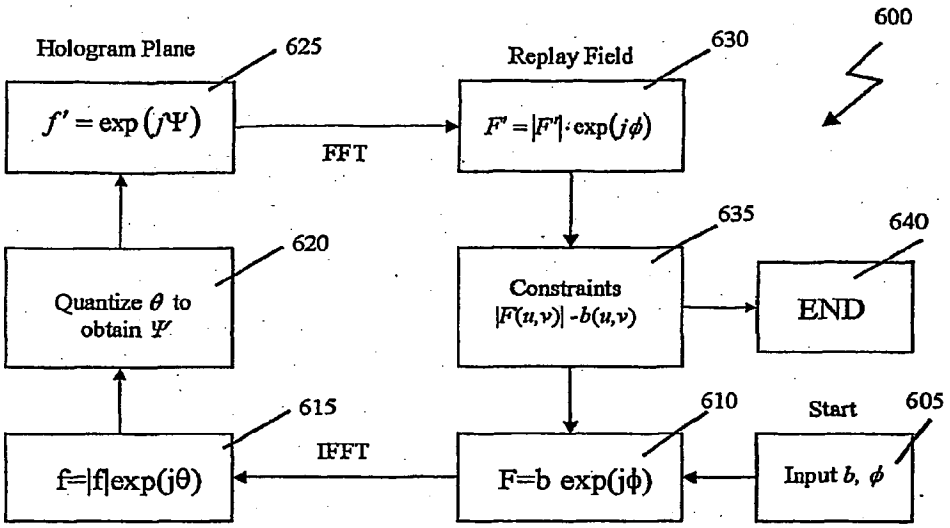
600
Hologram Plane
625
$f' = \exp(j\Psi)$
FFT
Replay Field
630
$F' = |F'| \cdot \exp(j\phi)$
635
640
Constraints
$|F(u,v)| - b(u,v)$
END
620
Quantize θ to obtain Ψ'
615
f=|f|exp(jθ)
IFFT
610
F=b exp(jϕ)
Start
605
Input b, ϕ

FIG. 6

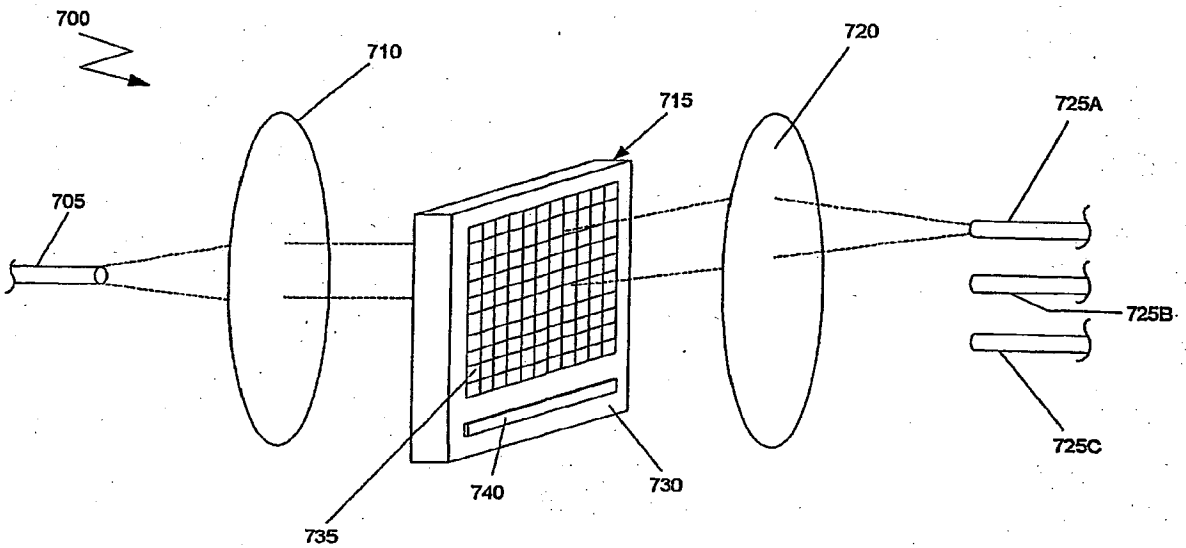

FIG. 7

INTERNATIONAL SEARCH REPORT

International application No.
PCT/US01/16174

A. CLASSIFICATION OF SUBJECT MATTER
IPC(7) : G03H 1/26, 1/12, 1/08
US CL : 359/11, 9, 29, 31, 35
According to International Patent Classification (IPC) or to both national classification and IPC

B. FIELDS SEARCHED

Minimum documentation searched (classification system followed by classification symbols)
U.S. : 359/1-35

Documentation searched other than minimum documentation to the extent that such documents are included in the fields searched
NONE

Electronic data base consulted during the international search (name of data base and, where practicable, search terms used)
NONE

C. DOCUMENTS CONSIDERED TO BE RELEVANT

Category *	Citation of document, with indication, where appropriate, of the relevant passages	Relevant to claim No.
X	US 5,959,747 A (PSALTIS et al) 28 September 1999 (28.09.1999), see entire reference.	1, 2, 5
—		
Y		3, 4, 6, 8, 9, 17
X	US 5,589,955 A (AMAKO et al) 31 December 1996 (31.12.1996), see entire reference.	1, 2
—		
Y		3, 4, 6, 8, 9, 17
Y	US 5,339,177 A (JENKINS et al) 16 August 1994 (16.08.194), see entire reference.	1, 2, 12, 19, 26, 40-42
Y	US 5,004,309 A (CAULFIELD et al) 02 April 1991 (02.04.1991), see entire reference.	1, 2, 12, 19, 26, 40-42

☐ Further documents are listed in the continuation of Box C. ☐ See patent family annex.

* Special categories of cited documents:

"A" document defining the general state of the art which is not considered to be of particular relevance

"E" earlier application or patent published on or after the international filing date

"L" document which may throw doubts on priority claim(s) or which is cited to establish the publication date of another citation or other special reason (as specified)

"O" document referring to an oral disclosure, use, exhibition or other means

"P" document published prior to the international filing date but later than the priority date claimed

"T" later document published after the international filing date or priority date and not in conflict with the application but cited to understand the principle or theory underlying the invention

"X" document of particular relevance; the claimed invention cannot be considered novel or cannot be considered to involve an inventive step when the document is taken alone

"Y" document of particular relevance; the claimed invention cannot be considered to involve an inventive step when the document is combined with one or more other such documents, such combination being obvious to a person skilled in the art

"&" document member of the same patent family

Date of the actual completion of the international search
01 September 2001 (01.09.2001)

Date of mailing of the international search report
29 OCT 2001

Name and mailing address of the ISA/US
Commissioner of Patents and Trademarks
Box PCT
Washington, D.C. 20231
Facsimile No. (703) 305-3230

Authorized officer
Tuyen Tra
Telephone No. (703) 308-4883

Form PCT/ISA/210 (second sheet) (July 1998)

(19) Europäisches Patentamt
European Patent Office
Office européen des brevets

(11) EP 1 053 501 B1

(12) **EUROPEAN PATENT SPECIFICATION**

(45) Date of publication and mention of the grant of the patent:
23.07.2003 Bulletin 2003/30

(21) Application number: **99902718.8**

(22) Date of filing: **02.02.1999**

(51) Int Cl.[7]: **G02F 1/136**, H01L 27/02

(86) International application number:
PCT/GB99/00348

(87) International publication number:
WO 99/039240 (05.08.1999 Gazette 1999/31)

(54) **LIGHT MODULATOR ON A SEMICONDUCTOR SUBSTRATE**

LICHTMODULATOR AUF EINEM SUBSTRAT AUS HALBLEITERMATERIAL

MODULATEUR DE LUMIERE SUR UN SUBSTRAT SEMI-CONDUCTEUR

(84) Designated Contracting States:
CH DE ES FR GB IT LI

(30) Priority: **02.02.1998 GB 9802219**

(43) Date of publication of application:
22.11.2000 Bulletin 2000/47

(73) Proprietor: **Thomas Swan & Co. Ltd.**
London, W14 ORZ (GB)

(72) Inventors:
- **WILKINSON, Timothy David**
  Trumpington, Cambridge CB2 2HZ (GB)
- **CROSSLAND, William Alden**
  Harlow, Essex CM20 2QD (GB)
- **TAN, Kim, Leong**
  Cambridge CB2 1ND (GB)
- **PRATT, Edward, Martin**
  Cambridge CB2 1RF (GB)
- **MEARS, Robert**
  Cambridge CB4 2AE (GB)

(74) Representative: **Neobard, William John et al**
Kilburn & Strode
20 Red Lion Street
London WC1R 4PJ (GB)

(56) References cited:
EP-A- 0 405 815 **EP-A- 0 811 872**
US-A- 5 182 665

- **JOHNSON K M ET AL: "Smart spatial light modulators using liquid crystals on silicon" IEEE JOURNAL OF QUANTUM ELECTRONICS, FEB. 1993, USA, vol. 29, no. 2, pages 699-714, XP000349817 ISSN 0018-9197**
- **HANDSCHY M A ET AL: "Ferroelectric Liquid-Crystal Devices For High-Resolution Imaging" SID INTERNATIONAL SYMPOSIUM DIGEST OF TECHNICAL PAPERS, ANAHEIM, MAY 6 - 10, 1991, vol. 22, 6 May 1991, pages 246-249, XP000503038**
- **RADCLIFFE S ET AL: "Miniature silicon backplane ferroelectric liquid crystal displays for head mounted display applications" INTERNATIONAL FERROELECTRIC LIQUID CRYSTAL CONFERENCE (FLC 95), CAMBRIDGE, UK, 23-27 JULY 1995, vol. 179, no. 1-4, pages 115-119, XP002103650 ISSN 0015-0193, Ferroelectrics, 1996, Gordon & Breach, Switzerland**

Note: Within nine months from the publication of the mention of the grant of the European patent, any person may give notice to the European Patent Office of opposition to the European patent granted. Notice of opposition shall be filed in a written reasoned statement. It shall not be deemed to have been filed until the opposition fee has been paid. (Art. 99(1) European Patent Convention).

Printed by Jouve, 75001 PARIS (FR)

BEST AVAILABLE COPY

EP 1 053 501 B1

AL2

Description

[0001] This invention relates to a device that can modulate the phase of light and that can be integrated with silicon VLSI (Very Large Scale Integrated) circuits for the transmission of digital information from them. Such integration is important because it enables 'smart pixels' to be fabricated in silicon; a smart pixel is an area on silicon with electronic functionality that can communicate with other such areas optically as well as electrically. Optical communication can be superior to electrical communication over large distances, so many types of large electronic systems will use electronic modules globally connected via optics.

[0002] Light modulators can be based on a silicon substrate. They often use aluminium layers as electrodes for the liquid crystal overlaid on them, these layers also functioning as mirrors [Collings et al., Applied Optics 28, pp. 4740-4747, 1989]. The modulators may be designed to modulate the intensity or phase of light. These devices are used in reflective mode and rely on a uniform aluminium mirror for successful operation. After fabrication, the silicon often needs to undergo a planarisation process to improve the device operation [O'Hara et al., "Post-processing using microfabrication techniques to improve the optical performance of liquid crystal over silicon backplane spatial light modulators", Proceedings of the SPIE, Vol. 2641, pp. 129-139, 1995]. Planarisation might be required for two reasons:

(1.) Some applications, e.g. holographic switching and filtering, require arrays of pixels with only small gaps between them (i.e. having what is commonly known as a high fill factor). The circuitry present at each pixel, even if it is only one drive transistor, takes up space and leads to large gaps, since all circuit structures present a topography, i.e. protrude above the flat silicon surface; and
(2.) The optical quality of aluminium metal mirrors that use the metal layers that are part of the standard CMOS VLSI circuit fabrication process is poor (owing to the processing conditions and choice of material).

[0003] Both these problems are solved in the latter article by depositing and patterning a new metal mirror layer on a planarised dielectric layer placed over the whole pixel area. An electrical connection must be made at each pixel between the electrode proper and the new mirror. Such planarisation is therefore desirable, but it is difficult and expensive.

[0004] An alternative approach is to use an SLM operating in transmissive mode. The Collings article mentions this as a possibility when using TFT arrays; reference may also be made to US-A-5182665 in the names O'Callaghan and Handschy (Displaytech, Inc.). This patent shows switchable diffraction gratings for diffracting unpolarized light; the gratings are made of FLC (ferro-electric liquid-crystal) cells addressed in stripes to which alternately opposite voltages can be applied. The plates containing the liquid-crystal material can be made of glass for visible-light applications, or silicon or other materials for IR applications. In telecommunications wavelengths of 1310 and 1550 nm are commonly used.

[0005] There are two main reasons for using FLCs for modulation for telecomms, rather than the nematic liquid crystals more common in displays. One concerns speed: nematics switch much slower than ferroelectrics; the other is that nematics suffer from noise due to phase quantisation. However, ferroelectrics in their turn have disadvantages in that they are more difficult to address, partly because they rotate the birefringence axes in the plane rather than switch between bi-refringent and uniaxial, and partly because this rotation is too small for many purposes - a maximum of 45° is all that can be achieved in practice. Moreover most ferroelectric liquid crystals (FLCs) are bi-stable: no gradation of the rotation of the rotation can be brought about.

[0006] The last disadvantage of FLCs can be reduced or eliminated by using distorted-helix FLCs. However, these likewise rotate the axes by not more than 45°.

[0007] Theoretically one can use two FLC devices in series, with a $\pi/4$ (half-wave) plate between them; however, using two SLMs is not a practical proposition. To achieve the same result US 5182665 in one embodiment (Fig. 12) makes use of an ingenious scheme using only one SLM where the incident light passes through the ferroelectric SLM, is reflected by a mirror, which can be constituted by one of the electrodes of the SLM, and passes back through the ferroelectric material. This gives the required 90° rotation.

[0008] The disadvantage of the transmissive modes as a class is that they have hitherto not allowed the use of active backplanes, that is to say, control circuitry associated with each pixel. US 5182665, for instance, describes only a pair of electrodes switching the entire grating on or off. Active-backplane arrangements, as explained in Collings et al., can be very fast and compact and are successfully used with reflective SLMs, but the standard CMOS or NMOS processes cannot be combined with transmissive SLMs because of the metallisation used for the transistors. It is an aim of the present invention to take advantage of active-backplane technology without abandoning the double-pass SLM configuration.

[0009] According to the present invention there is provided a light-modulating device according to the subject-matter of claim 1.

[0010] In particular the electrodes on the side of the light-modulating layer adjacent to the subtrate may be constituted by diffused regions in the semiconductor substrate, or by polycrystalline layers formed on the substrate, which for silicon are transparent to infrared wavelengths above 1200 nm. Such materials fit in easily with the conventional silicon processes, and indeed the invention also relates to methods for making such struc-

TS0000336

tures in which the electrodes are made at the same time as a component of the drive circuitry. However, in principle materials such as ITO can be used.

[0011] Preferably the double-pass configuration is used in which a mirror is provided on the side of the modulating layer opposite the semiconductor substrate, usually with a quarter-wave plate on the mirror.

[0012] The modulating layer can be a ferroelectric liquid crystal or some other light-modulating material and the semiconductor is most conveniently silicon. Light in the common telecommunications wavelength region (1.3μm to 1.55μm) will pass through the light-modulating material and silicon substrate, so that the device can operate in a transmissive mode.

[0013] In operation some property of the light, e.g. phase, is altered as it passes through the modulator. To this end the electrode can be used to alter the potential applied to the material of the light-modulating layer, thus controlling the modulation of the property of the light. Circuitry that performs operations, such as applying a drive voltage to the substrate electrode, and the control of the modulator, is then integrated on the silicon substrate, beside the modulator. Such devices are commonly known as smart pixels.

[0014] The use of substrate diffusions, or alternatively polycrystalline semiconductor leads, to apply a voltage to the liquid-crystal layer through which light is transmitted rather than reflected totally solves problem (2) indicated above, because no flat surface is needed for reflection. However, a diffused-electrode arrangement might be useful even for reflective devices since the surface of the silicon wafer is extremely flat and for suitable wavelengths can be used as a reflector.

[0015] The invention can be applied to linear (one-dimensional) arrays of pixels, where circuitry can be placed outside the pixel area. Here problem 1 indicated above does not exist, enabling high quality linear devices to be made. In many applications that use structured illumination (light beams aimed at specific modulators) problem 1 indicated above also does not exist. In both these cases there are major advantages in operating liquid-crystal (or other integrated) modulators in this manner.

[0016] A further advantage of the invention occurs when an array of reflective pixels is required, but it is also needed to place an optical component (such as a fixed wave plate) directly next to the mirror. Since such a waveplate will normally be insulating in a conventional silicon-backplane spatial light modulator, optically transparent conducting pixels must be defined on the top surface of the waveplate and connected by vias to the underlying circuitry. This is difficult and expensive, but using the invention it can be avoided, e.g. by placing a waveplate on the front glass of the liquid-crystal cell and depositing a high-quality continuous mirror on its outside surface, with the diffused-electrode side of the modulator facing the incoming light.

[0017] The liquid crystal can be a single two-state or two-level (i.e. "black" and "white") modulator. However, two-level phase modulators used to display a phase hologram have two main disadvantages. Firstly, they operate with an inherent inverse symmetry that is a problem in holographically routed crossbar systems, as only half of the replay plane may be used for switching purposes and the other half is wasted. Secondly, there is a loss introduced by such holograms, as the maximum efficiency of a two-level phase system is only 41%.

[0018] By using three or more levels of modulation, i. e. a grey scale, the inverse symmetry can be removed from the replay plane, allowing the whole replay plane to be used for switching purposes. Also, the loss introduced into a system using e.g. four-level holograms is less than in two-level systems, the maximum efficiency of such a hologram being 81%. The disadvantages of a two-level system are thus removed by using three or more levels of modulation.

[0019] To get four levels of phase modulation requires phase shifts of up to 270° being introduced by the modulator. Using a material such as a ferroelectric liquid crystal (FLC) in a modulator requires a material with a tilt angle of at least 67.5°; such materials (e.g. FLC 10817) exist, but their electro-optic effects are difficult to incorporate in a device. Hence standard FLCs, with their lower tilt angle doubled by the double-pass configuration, offer a good working compromise. Distorted-helix FLCs are particularly suitable.

[0020] For a better understanding of the invention embodiments of it will now be described, by way of example, with reference to the accompanying drawings, in which:

- Figure 1 shows a very schematic plan view of a silicon substrate 1 with a substrate diffusion 2;
- Figure 2 shows a side view of an embodiment of the invention incorporating the substrate described in Figure 1;
- Figure 3 shows a silicon design layout using a two-micron process;
- Figure 4 shows a section through a reflective modulating element representing a second embodiment of the invention, which could be used to provide increased modulation levels as described above; and
- Figures 5A, B and C show variations of the basic scheme of Figure 4.

[0021] In Figs. 1 and 2 a silicon substrate 1 contains a substrate diffusion 2 that acts as an electrode. A liquid-crystal layer 5 is contained between the surface of a glass plate 3 and the silicon substrate 1. The glass plate 3 has an ITO electrode on its surface facing the liquid crystal, and potential difference is applied to the liquid crystal 5 by way of the transparent electrode 4 and the substrate diffusion 2 in order to modulate the state of the liquid crystal. The transparent electrode can be a common electrode.

[0022] Light enters through the glass 3 and passes

TS0000337

through the transparent electrode 4, and through the liquid crystal 5. After passing through the liquid crystal, the light passes through the substrate diffusion 2 and the silicon substrate 1 and leaves the device. The phase of the light entering the device at 3 and exiting the device at 1 is altered by the liquid-crystal layer 5 when the latter is addressed by the application of a suitable voltage between the transparent electrode 4 and the diffusion 2. The complete unit thus acts as an optically transmissive phase modulator.

[0023] In an SLM many pixels of this nature will be formed in a one-dimensional or two-dimensional array, each addressed by a drive circuit. In a two-dimensional array the drive circuits could alternate in rows with the pixels, or they could all be together in a separate area. TFTs could be used as pixel drivers. In devices using the invention this drive circuit is formed in the substrate 1, in a second part of the substrate to the side of the first. The technology for designing and fabricating a CMOS VLSI circuit is well established. Figure 3 is an example layout that could be used as the basis for a one-dimensional light-modulating device, when used in a cell such as described, for example, in Figure 2.

[0024] The end part of a substrate diffusion 6, of which only the left-hand end is visible in Fig. 3, is connected to some control and drive circuitry 7 in the same silicon substrate. The voltage applied to the diffusion 6 is controlled by the control and drive circuitry 7. In practice there might be several hundred diffusions 6, each having corresponding circuits 7, of which Fig. 3 shows only one, arranged adjacently to form a row of pixels constituting a first, transparent, area of the substrate. (The right-angle bend in the connecting line between the diffusion 6 and the circuit 7 would not be present in practice and is purely for ease of representation). The substrate diffusion 6 might have dimensions 20μm x 6mm, while the associated circuit 7 might be 20μm x 100μm, arranged in line with its diffusion 6. The circuits 7, with their opaque interconnects, collectively form a second area, generally considerably smaller than the first. Light is directed at the pixels of the first area.

[0025] Transmissive optical modulators that can provide several distinct levels, giving analogue modulation of light, are important as they can be used in many optical systems e.g. optical correlators, displays and optical interconnects.

[0026] A second embodiment of the invention, using a so-called double-pass configuration, will now be described by way of further example with reference to Fig. 4.

[0027] A silicon substrate 14 with substrate diffusions (not shown) and control circuits (likewise) is attached to a cell containing a material, here a liquid crystal 15, whose optical properties, for instance its reflective, absorptive or transmissive properties, change with applied voltage as before. A transparent electrode 16 is attached to the cell containing the material 15 and to a glass or plastic quarter-wavelength waveplate 17. In this embodiment the plate 17 acts simultaneously as the rear plate for the LC cell and as a quarter-wave plate, but two separate components could be used. The waveplate 17 is placed against a mirror 18. Infra-red light enters through the silicon substrate and diffusion 14 and continues through the modulating material 15 and transparent electrode 16. Following this the light travels through the waveplate 17 and is reflected from the mirror 18. The light takes a reverse path from 17 through to 14 and leaves the cell. As a result of this second passage through the modulating material 15 the modulation of the light is doubled, increasing the overall magnitude of the electro-optic effect. An applied potential difference between the electrodes 14 and 16 modulates the optical property of the material 15. The complete cell, encompassing the parts 14 to 18, may thus act as a light modulator.

[0028] Figs. 5A, 5B and 5C show various ways of incorporating the quarter-wave plate between the LC layer and the mirror. In Fig. 5A a transparent plate is used, constituting one of the plates of the liquid-crystal cell. It can be of glass, or of quartz or mica. However, this plate has to be 2-3 mm thick to give the quarter wave retardation for IR wavelengths, which gives rise to undesirable diffraction effects. In Fig. 5B therefore a thin (100μm) glass plate 20 is used, the λ/4 plate being formed by a nematic liquid-crystal layer 17a. In Fig. 5C a fused reactive monomer layer 17b on glass is used. Mechanical support is afforded by a rear glass plate 22. In all these embodiments the drive circuits in the silicon are not shown.

[0029] The embodiments described above are particularly suitable for use as light modulators for use in the switching of telecommunications signals. However, the invention can be applied to any device where an optical signal or information is to be modulated by the application of an electric signal.

Claims

1. A light-modulating device comprising a semiconductor substrate (1), a layer of light - modulating material (5) on a first part of the substrate, electrodes (2) for for applying a voltage to the light - modulating layer, the electrodes being made of a material transparent to the wavelength of the light used, and drive circuitry (7) for addressing the light-modulating layer via the said electrodes; wherein the drive circuitry (7) for addressing the light-modulating layer via the said electrodes is integrated on the semiconductor substrate to the side of the light-modulating region of the modulator and wherein the electrodes are integrated in the semiconductor substrate.

2. A light-modulating device according to claim 1, in which the electrodes (2) are diffused regions in the semiconductor substrate.

TS0000338

3. A light-modulating device according to claim 1, in which the electrodes are polycrystalline layers formed on the substrate.

4. A light-modulating device according to any preceding claim, in which a mirror (18) is provided on the side of the modulating layer opposite the semiconductor substrate in order to reflect the light back through the modulator.

5. A light-modulating device according to claim 4, and further including a quarter-wave plate between the mirror and the modulator.

6. A light-modulating device according to any preceding claim, in which the addressing electrodes form a one-dimensional array.

7. A light-modulating device according to claim 6, in which the individual drive circuits are arranged in a row parallel to the array of addressing electrodes.

8. A light-modulating device according to any of claims 1 to 5, in which the addressing electrodes form a two-dimensional array.

9. A light-modulating device according to any preceding claim, in which the modulator is a liquid crystal device contained between the semiconductor substrate (1) on the one side and a transparent plate (3) on the other.

10. A light-modulating device according to any preceding claim, arranged to be used at infrared wavelengths above 1200 nm.

Patentansprüche

1. Lichtmodulator, der ein Halbleitersubstrat (1), eine Schicht aus Licht modulierendem Material (5) auf einem ersten Teil des Substrats, Elektroden (2) für das Anlegen einer Spannung auf die Licht modulierende Schicht, wobei die Elektroden aus einem Material hergestellt sind, das gegenüber der Wellenlänge des verwendeten Lichts transparent ist, und eine Treiberschaltung (7) zum Ansteuern der Licht modulierenden Schicht über die Elektroden aufweist, wobei die Treiberschaltung (7) zum Ansteuern der Licht modulierenden Schicht über die Elektroden auf dem Halbleitersubstrat zur Seite der Licht modulierenden Region des Modulators hin eingebaut ist und wobei die Elektroden in dem Halbleitersubstrat eingebaut sind.

2. Lichtmodulator nach Anspruch 1, wobei die Elektroden (2) diffundierte Regionen in dem Halbleitersubstrat sind.

3. Lichtmodulator nach Anspruch 1, wobei es sich bei den Elektroden um polykristalline Schichten handelt, die auf dem Substrat ausgebildet sind.

4. Lichtmodulator nach einem der vorhergehenden Ansprüche, wobei ein Spiegel (18) auf der Seite der modulierenden Schicht gegenüber dem Halbleitersubstrat angeordnet ist, um das Licht zurück durch den Modulator zu reflektieren.

5. Lichtmodulator nach Anspruch 4, der darüber hinaus ein Viertelwellenplatine zwischen dem Spiegel und dem Modulator aufweist.

6. Lichtmodulator nach einem der vorhergehenden Ansprüche, wobei die ansteuernden Elektroden eine eindimensionale Anordnung bilden.

7. Lichtmodulator nach Anspruch 6, wobei die einzelnen Treiberschaltungen, in einer Reihe angeordnet sind, die parallel zur Anordnung der ansteuernden Elektroden verläuft.

8. Lichtmodulator nach einem der Ansprüche 1 bis 5, wobei die ansteuernden Elektroden eine zweidimensionale Anordnung bilden.

9. Lichtmodulator nach einem der vorhergehenden Ansprüche, wobei der Modulator ein Flüssigkristallbauteil ist, der zwischen dem Halbleitersubstrat (1) auf der einen Seite und einer transparenten Platte (3) auf der anderen Seite enthalten ist.

10. Lichtmodulator nach einem der vorhergehenden Ansprüche, der eingerichtet ist, um mit Infrarotwellenlängen über 1200 nm verwendet zu werden.

Revendications

1. Modulateur de lumière comprenant un substrat semi-conducteur (1), une couche de matériau modulateur de lumière (5) sur une première partie du substrat, des électrodes (2) pour appliquer une tension à la couche modulatrice de lumière, les électrodes étant constituées d'un matériau transparent à la longueur d'onde de la lumière utilisée, et des circuits de commande (7) pour adresser la couche modulatrice de lumière via lesdites électrodes; dans lequel les circuits de commande (7) permettant d'adresser la couche modulatrice de lumière via lesdites électrodes sont intégrés au substrat semi-conducteur sur le côté de la région modulatrice de lumière du modulateur et dans lequel les électrodes sont intégrées au substrat semi-conducteur.

2. Modulateur de lumière selon la revendication 1, dans lequel les électrodes (2) sont des régions dif-

TS0000339

3. A light-modulating device according to claim 1, in which the electrodes are polycrystalline layers formed on the substrate.

4. A light-modulating device according to any preceding claim, in which a mirror (18) is provided on the side of the modulating layer opposite the semiconductor substrate in order to reflect the light back through the modulator.

5. A light-modulating device according to claim 4, and further including a quarter-wave plate between the mirror and the modulator.

6. A light-modulating device according to any preceding claim, in which the addressing electrodes form a one-dimensional array.

7. A light-modulating device according to claim 6, in which the individual drive circuits are arranged in a row parallel to the array of addressing electrodes.

8. A light-modulating device according to any of claims 1 to 5, in which the addressing electrodes form a two-dimensional array.

9. A light-modulating device according to any preceding claim, in which the modulator is a liquid crystal device contained between the semiconductor substrate (1) on the one side and a transparent plate (3) on the other.

10. A light-modulating device according to any preceding claim, arranged to be used at infrared wavelengths above 1200 nm.

Patentansprüche

1. Lichtmodulator, der ein Halbleitersubstrat (1), eine Schicht aus Licht modulierendem Material (5) auf einem ersten Teil des Substrats, Elektroden (2) für das Anlegen einer Spannung auf die Licht modulierende Schicht, wobei die Elektroden aus einem Material hergestellt sind, das gegenüber der Wellenlänge des verwendeten Lichts transparent ist, und eine Treiberschaltung (7) zum Ansteuern der Licht modulierenden Schicht über die Elektroden aufweist, wobei die Treiberschaltung (7) zum Ansteuern der Licht modulierenden Schicht über die Elektroden auf dem Halbleitersubstrat zur Seite der Licht modulierenden Region des Modulators hin eingebaut ist und wobei die Elektroden in dem Halbleitersubstrat eingebaut sind.

2. Lichtmodulator nach Anspruch 1, wobei die Elektroden (2) diffundierte Regionen in dem Halbleitersubstrat sind.

3. Lichtmodulator nach Anspruch 1, wobei es sich bei den Elektroden um polykristalline Schichten handelt, die auf dem Substrat ausgebildet sind.

4. Lichtmodulator nach einem der vorhergehenden Ansprüche, wobei ein Spiegel (18) auf der Seite der modulierenden Schicht gegenüber dem Halbleitersubstrat angeordnet ist, um das Licht zurück durch den Modulator zu reflektieren.

5. Lichtmodulator nach Anspruch 4, der darüber hinaus ein Viertelwellenplatine zwischen dem Spiegel und dem Modulator aufweist.

6. Lichtmodulator nach einem der vorhergehenden Ansprüche, wobei die ansteuernden Elektroden eine eindimensionale Anordnung bilden.

7. Lichtmodulator nach Anspruch 6, wobei die einzelnen Treiberschaltungen, in einer Reihe angeordnet sind, die parallel zur Anordnung der ansteuernden Elektroden verläuft.

8. Lichtmodulator nach einem der Ansprüche 1 bis 5, wobei die ansteuernden Elektroden eine zweidimensionale Anordnung bilden.

9. Lichtmodulator nach einem der vorhergehenden Ansprüche, wobei der Modulator ein Flüssigkristallbauteil ist, der zwischen dem Halbleitersubstrat (1) auf der einen Seite und einer transparenten Platte (3) auf der anderen Seite enthalten ist.

10. Lichtmodulator nach einem der vorhergehenden Ansprüche, der eingerichtet ist, um mit Infrarotwellenlängen über 1200 nm verwendet zu werden.

Revendications

1. Modulateur de lumière comprenant un substrat semi-conducteur (1), une couche de matériau modulateur de lumière (5) sur une première partie du substrat, des électrodes (2) pour appliquer une tension à la couche modulatrice de lumière, les électrodes étant constituées d'un matériau transparent à la longueur d'onde de la lumière utilisée, et des circuits de commande (7) pour adresser la couche modulatrice de lumière via lesdites électrodes; dans lequel les circuits de commande (7) permettant d'adresser la couche modulatrice de lumière via lesdites électrodes sont intégrés au substrat semi-conducteur sur le côté de la région modulatrice de lumière du modulateur et dans lequel les électrodes sont intégrées au substrat semi-conducteur.

2. Modulateur de lumière selon la revendication 1, dans lequel les électrodes (2) sont des régions dif-

TS0000340

fusées dans le substrat semi-conducteur.

3. Modulateur de lumière selon la revendication 1, dans lequel les électrodes sont des couches polycristallines formées sur le substrat.

4. Modulateur de lumière selon l'une quelconque des revendications précédentes, dans lequel un miroir (18) est agencé sur le côté de la couche modulatrice opposé au substrat semi-conducteur de manière à réfléchir la lumière à travers le modulateur.

5. Modulateur de lumière selon la revendication 4, comprenant en outre une lame quart d'onde entre le miroir et le modulateur.

6. Modulateur de lumière selon l'une quelconque des revendications précédentes, dans lequel les électrodes d'adressage forment un réseau unidimensionnel.

7. Modulateur de lumière selon la revendication 6, dans lequel les circuits de commande individuels sont agencés en rangée parallèle au réseau d'électrodes d'adressage.

8. Modulateur de lumière selon l'une quelconque des revendications 1 à 5, dans lequel les électrodes d'adressage forment un réseau bidimensionnel.

9. Modulateur de lumière selon l'une quelconque des revendications précédentes, dans lequel le modulateur est un dispositif à cristal liquide confiné entre le substrat semi-conducteur (1) sur une face et une plaque transparente (3) sur l'autre face.

10. Modulateur de lumière selon l'une quelconque des revendications précédentes, agencé pour être utilisé à des longueurs d'onde infrarouges supérieures à 1200 nm.

TS0000341

Figure 1

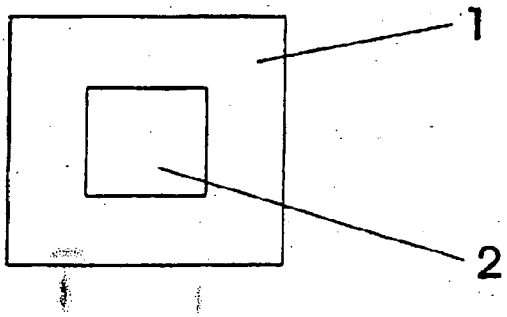

Figure 2

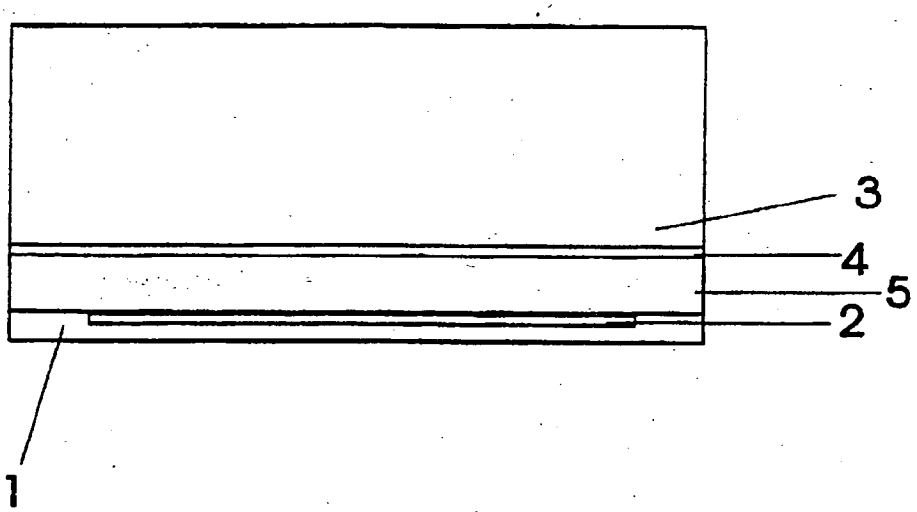

TS0000342

Figure 3

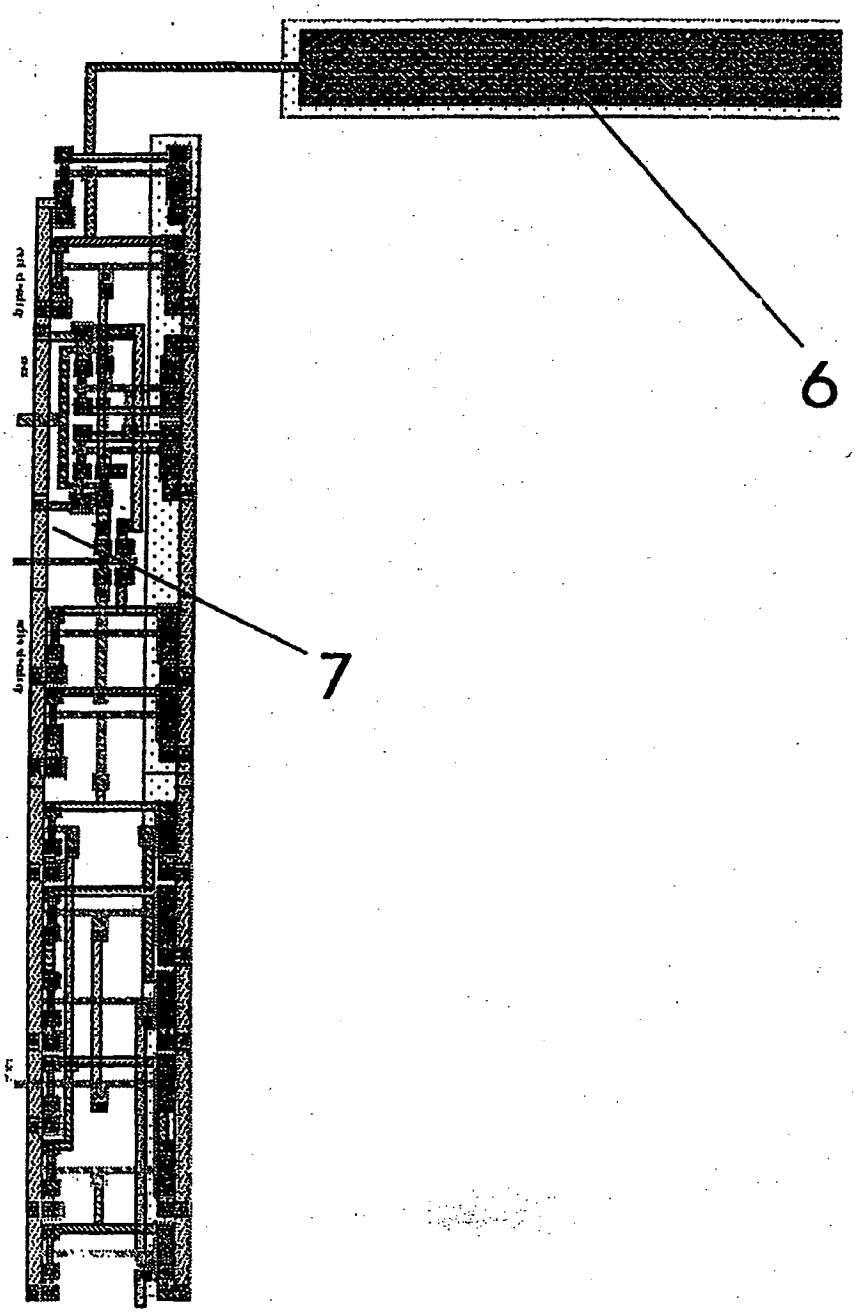

TS0000343

Figure 4

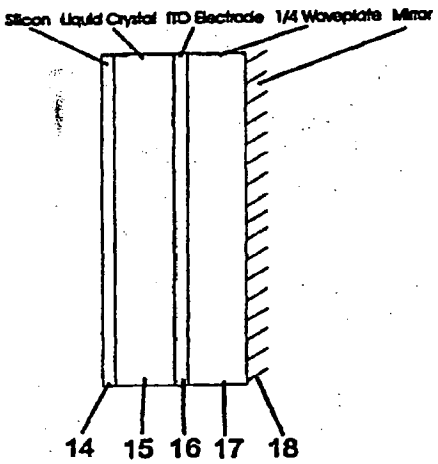

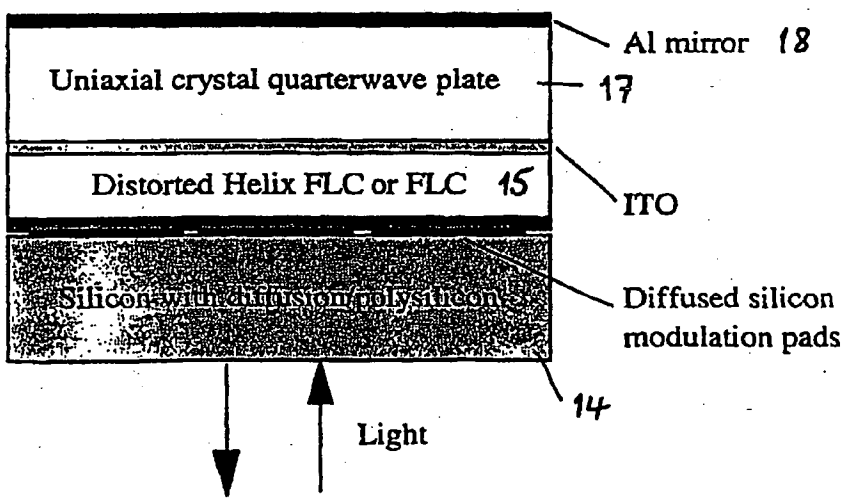

Figure 5A

TS0000344

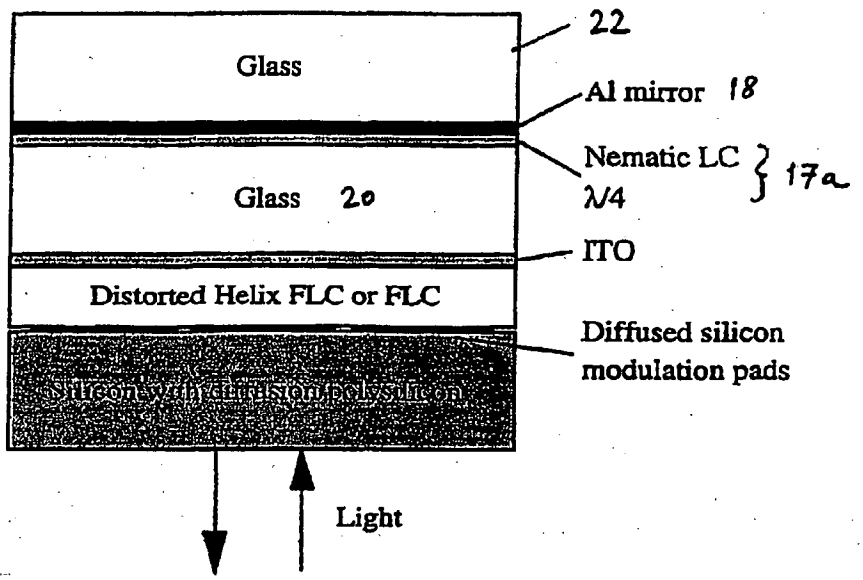

Figure 5B

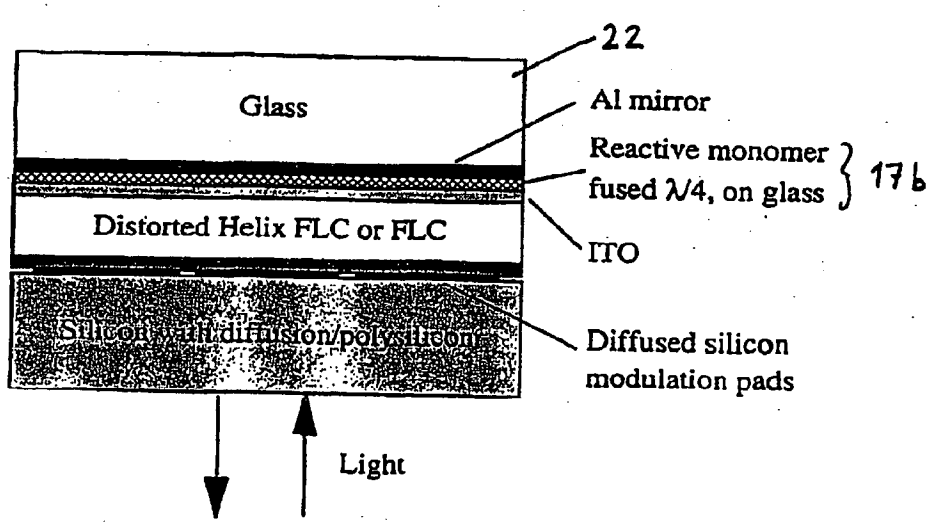

Figure 5C

TS0000345

This Page is Inserted by IFW Indexing and Scanning Operations and is not part of the Official Record

BEST AVAILABLE IMAGES

Defective images within this document are accurate representations of the original documents submitted by the applicant.

Defects in the images include but are not limited to the items checked:

- ☐ BLACK BORDERS
- ☐ IMAGE CUT OFF AT TOP, BOTTOM OR SIDES
- ☐ FADED TEXT OR DRAWING
- ☒ BLURRED OR ILLEGIBLE TEXT OR DRAWING
- ☐ SKEWED/SLANTED IMAGES
- ☐ COLOR OR BLACK AND WHITE PHOTOGRAPHS
- ☐ GRAY SCALE DOCUMENTS
- ☐ LINES OR MARKS ON ORIGINAL DOCUMENT
- ☐ REFERENCE(S) OR EXHIBIT(S) SUBMITTED ARE POOR QUALITY
- ☐ OTHER: _____

IMAGES ARE BEST AVAILABLE COPY.
As rescanning these documents will not correct the image problems checked, please do not report these problems to the IFW Image Problem Mailbox.

(19) Europäisches Patentamt
European Patent Office
Office européen des brevets

(11) EP 1 050 775 A1

(12) EUROPEAN PATENT APPLICATION

(43) Date of publication:
08.11.2000 Bulletin 2000/45

(51) Int. Cl.[7]: **G02F 1/1334**, G02F 1/29

(21) Application number: **00303355.2**

(22) Date of filing: **20.04.2000**

(84) Designated Contracting States:
AT BE CH CY DE DK ES FI FR GB GR IE IT LI LU MC NL PT SE
Designated Extension States:
AL LT LV MK RO SI

(30) Priority: **22.04.1999 GB 9909323**

(71) Applicant:
THOMAS SWAN AND CO., LTD.
Consett, Co. Durham DH8 7ND (GB)

(72) Inventors:
- **Crossland, William Alden**
  Harlow, Essex CM20 2QD (GB)
- **Redmond, Maura Michelle**
  Girton, Cambridge CB3 0NW (GB)
- **Wilkinson, Timothy David**
  Trumpington, Cambridge CB2 2HZ (GB)

(74) Representative:
Mohun, Stephen John
Haseltine Lake & Co.,
Imperial House,
15-19 Kingsway
London WC2B 6UD (GB)

(54) Optical phase modulator

(57) A phase modulator includes a lower layer of glass or silicon substrate containing a 1-D array of pixels (42) formed from either ITO or aluminium respectively. The substrate is covered by an upper glass plate coated uniformly with ITO to make one large transparent electrode. Polymer-dispersed LC composite material is sandwiched between these layers, the polymer-dispersed material containing a nematic LC (with positive dielectric). Figure 4a shows the bipolar director configuration within the droplets (40) in the field-off condition where the bipolar axis of each droplet is assumed to be randomly oriented. Light impinging on this material may encounter small enough scattering centres to be suitable for Rayleigh scattering. An applied electric field exerts an electric torque on the directors. This is balanced by an elastic torque generated by the distortion of the director pattern away from its equilibrium position. The balance of these two forces determines an equilibrium position of the director and a rotation of the bipolar axis towards an orientation normal to the plane of the SLM. The device is thus able to provide an analogue modulation of the refractive index, and hence phase delay, encountered by incoming light. Figure 4b shows the final switch configuration in which voltages of different magnitudes have been applied to different pixels (42) to produce several different regions (44) of PDLC, with different switch states, and hence a phase pattern suitable to defract light into first order spot with high efficiency.

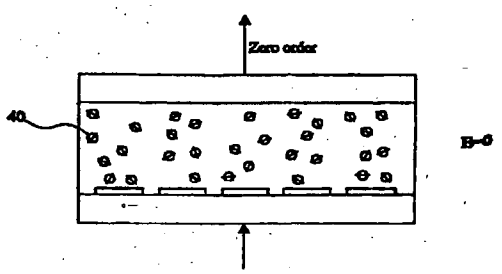

FIG. 4(a)

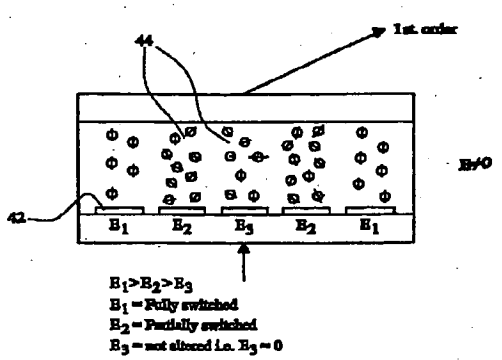

FIG. 4(b)

EP 1 050 775 A1

AQ

TS0000347

Description

[0001] The present invention relates to a phase modulator for use in the phase modulation of light, and is concerned particularly with the use of polymer-dispersed liquid crystalline materials to effect such modulation.

[0002] Polymer dispersed liquid crystalline materials (PDLCs) are composite materials made of droplets or regions of liquid crystal (LC) encapsulated within a polymer matrix. The liquid crystalline phase type most frequently used is the nematic phase. The most usual electro optic effect employed is the production of a light shutter which transforms between a scattering and non scattering state by the action of an electric field. Such shutters are most commonly developed for applications such as active windows and displays. A key feature in this technology is the use of LC droplet sizes of the order of the wavelength of the incident light (typically droplet diameter (R) = 0.3-3 μm).

[0003] Very recently LC particle sizes sufficiently small to be close to the Rayleigh scattering regime (R = 50-100 nm) have been developed and used for the production of non display applications such as holographic gratings and waveguides. In both cases scattering is not desired and the small droplet size greatly reduces any scattering loss. Instead the electro optic effect, upon which the devices are based; depends only on the match or miss-match of the refractive indices in cf. to the polymer matrix (for hologram applications) or on the variation of the apparent birefringence of the system (for waveguide applications).

[0004] This invention relates to the use of polymer dispersed liquid crystal materials, containing liquid crystal particles of very small diameter (-100 nm or less), in the development of polarization insensitive analogue phase modulating devices. Currently binary ferroelectric liquid crystal (FLC) phase modulators are being developed for use in free space holographic routing switches for telecomms applications. The great value of FLCs in this application is their fast operation speed and polarisation-independent operation, (since telecomms light signals have no fixed polarisation direction). However they suffer from an upper limit on their maximum potential diffraction efficiency because of the binary nature of the FLC switching effect. The devices described below involve the use of polymer dispersed liquid crystalline materials to generate a polarisation-independent method of producing analogue phase modulation. Many different devices could be based upon this effect but of particular interest is the use of such materials in the production of reconfigurable spatial light modulators for use as holographic light routing switches for telecomms or aerospace applications.

[0005] To date PDLC materials have been largely developed with particle diameters of the order of the wavelength of the incident light in order to take advantage of the large scattering such a particle size would produce. Typically such a device is composed of a layer of polymer dispersed liquid crystalline material placed between transparent electrodes such as Indium-Tin Oxide (ITO) on Glass or Polymer). An example of such a device is shown schematically at Figure 1. There are several methods of producing the phase separation necessary to produce PDLC structures. In one example the PDLC material may be filled into a preprepared cell as a prepolymer syrup containing monomer units and photosensitive components intended to make the polymerisation action light activated. The LC material is dissolved within this mixture. Once illuminated with light of the correct wavelength range polymerisation begins. As the polymer chain lengths grow the chemical potential of the LC within the mixture changes resulting in it phase separating from the mixture into droplets. The size of the droplets can be controlled by varying certain parameters of this process such as the rate of polymerisation.

[0006] Within each droplet the LC molecules orient themselves with one of the several characteristic LC director (i.e. mean value of direction of molecular long axes) configurations possible. (Which director arrangement is adopted for a given PDLC material is determined by several parameters). Here, we consider the common director configuration known as 'bipolar', for which the directors lie tangentially to the surface of the LC/polymer interface and exhibit two singularities between which there is an axial symmetry of director orientation (a bipolar axis), see Fig 1(a). In the absence of an applied field the bipolar axis orientation is random across the sample such that on average each droplet 10 presents a refractive index different to that of the polymer matrix and thus a refractive index discontinuity to the incoming light. In this state incoming light 12 is scattered strongly effectively blocking its transmission, Fig 1(b). Once a sufficiently high electric field E is applied the bipolar axes become aligned with the field lines. Light travelling through the sample along the direction of the field lines now experiences the droplets' refractive indices as those which lie perpendicular to the bipolar axis direction. Careful formulation of the nematic LC material ensures that the refractive index in this direction matches that of the polymer as closely as possible. The material now appears to be transparent to the transmitted light 14 - see Fig1(c). Thus an electric field is able to change the transmission properties of the material between a scattering state and a non-scattering state.

[0007] Devices based on this effect differ greatly from those based upon the present invention in that the latter do not employ PDLCs with particle sizes selected for scattering.

TS0000348

(b) Non Scattering Devices

Refractive index match / mis-match for Hologram Generation.

[0008] Work has also been undertaken into the application of PDLC materials to fixed hologram generation. Typically the PDLC prepolymer mixture is illuminated by two coherent beams of light which interfere within the PDLC material to produce an interference pattern. The rate of polymerisation of the pre-polymer syrup is dependent on the intensity of the incident light. Polymerisation is faster in areas for which the light is most intense and within these regions the chemical potential of the LC is raised and the potential of the monomer is lowered. This results in the flow of liquid crystal and monomer components in opposite directions resulting in the seperation of polymer and liquid crystals droplets into different areas. Thus for example in a simple diffraction grating lines are formed alternately composed of regions high in concentrations of LC and polymer. The operation of the resulting device now depends on the change in the average refractive index of the LC layers. In the absence of an electric field the average refractive index n(lc)in the high LC density region does not match that n(p) in the low LC density region and the hologram is revealed (see Fig 2a). Some of the light incident normally to the device will be deflected into the first order diffraction peak. When a field E is applied across the electrodes 20 the LC director orientation rotates until the average refractive index of the LC region 22 closely matches that of the polymer 24 effectively 'erasing' the holographic grating. Light incident normally to the device will be transmitted through without deflection (see Fig. 2b). In this way light may be selectively diffracted or transmitted depending on the presence or absence of the electric field. If the particles size is of the order of the wavelength of light the hologram is effectively based on an amplitude grating, i.e. light would pass directly through in the field-on state but would be directed to the first order with some large degree of loss in the field-off state. By utilising LC droplets of very small diameter the hologram is essentially a phase grating and the loss to the deflected beam is much reduced. In addition the use of particles with small diameters allows the spatial frequency of such holograms to be maximised. However this mechanism for hologram generation restricts each device to one fixed spatial frequency and thus one direction of deflection of the diffracted beam. This effect has been proposed as suitable for the generation of variable focus lenses and stacked sets of holograms for holographic routing switches.

[0009] The present invention differs from the techniques described above in that it does not use the electric field control of the director profile of the LC particles in order to match or not match the refractive index of permanently recorded PDLC gratings.

(c) Electrically Controllable Anisotropy for Optical Amplitude Modulators.

[0010] Recently is has been suggested to use small particle PDLCs for the development of PDLC waveguide type structures. Here the birefringence of the sample is modulated by director rotation induced by the application of an electric field normal to the direction of incident light. When such a device is placed between crossed polarisers it becomes an amplitude modulator.

[0011] The present invention differs from such devices in that it does not involve the generation of separate e and o waves i.e. the technique of the present invention does not involve the use of the birefringence of the LC material to change the polarisation state of the outgoing light by superposition of the emerging e and o rays. No e and o rays are generated within the proposed device since the material is arranged to appear isotropic to the transmitted light.

[0012] In contrast to prior techniques described above, specific embodiments of the present invention have as their aim the use of nano-sized polymer-dispersed liquid crystal particles to produce a pure and variable phase delay in the light transmitted by a device. In this context the phase delay is said to be pure in the sense that it is not the result of polarisation-modulation due to the separate optical path lengths experienced by e and o rays.

[0013] Phase delays produced in this manner are to be used to make efficient analogue - phase, polarisation - independent spatial light modulators.

[0014] According to one aspect of the present invention there is provided a light modulator for modulating the phase of incident light in an analogue manner, the modulator comprising an active electro optical layer of polymer dispersed liquid crystalline (PDLC) material sandwiched between two electrode layers, at least one of which is transparent to the incident light, wherein the PDLC material contains liquid crystal droplets located substantially randomly within the active layer and having a length less than the wavelength of the incident light, such that the application of an electric field across the electrodes influences the director configurations of the droplets to modify the average refractive index of the active layer, and therefore modulates the phase of the incident light in an analogue manner.

[0015] The modulator may modulate the phase of the incident light in a polarisation-independent manner.

[0016] The application of the electric field may distort the director configurations of at least some of the droplets. The extent of distortion may be a function of the applied field.

[0017] The light modulator may be arranged to modulate the phase of transmitted incident light. In this case both of the electrode layers may be transparent.

[0018] Alternatively or additionally, the light modulator may be arranged to modulate the phase of reflected incident light. In this case one of the electrode layers

TS0000349

may be arranged to reflect the incident light which has passed through the active layer.

[0019] The or each electrode layer may comprise a substrate of glass or silicon. The transparent electrode layer may comprise a glass or silicon substrate coated in Indium-Tin oxide (ITO) or a silicon substrate (transparent at telecomms wavelength). The reflective electrode may comprise a glass or silicon substrate coated in a reflective, conductive material, such as a metal.

[0020] Preferably the liquid crystal material is a nematic material.

[0021] A light modulator according to the present invention may form an optical switch such as a spatial light modulator (SLM) for the holographic routing of optical signals used in, for example, telecommunications or aerospace applications.

[0022] At least one of the electrode layers may have formed upon it individual electrode elements, which may be addressable individually or collectively and may form a one or two dimensional array. Therefore, different regions of the active layer, which may act as pixels, may be made to experience different strengths of applied electric field.

[0023] The invention also includes a method of modulating the phase of light in an analogue manner, the method comprising causing the light to be incident upon a modulator device comprising an active electro optical layer of polymer-dispersed liquid crystalline (PDLC) material sandwiched between electrode layers, at least one of which is transparent to the incident light, wherein the PDLC material contains liquid crystal droplets located substantially randomly within the active layer and having a length less than the wavelength of the incident light, and applying an electric field across the electrodes to influence the director configurations of the droplets so as to modify the average refractive index of the active region, and thereby modulate the phase of the incident light in an analogue manner.

[0024] The method may comprise modulating the phase of the incident light in a polarisation-independent manner.

[0025] The method may comprise distorting the director configurations of at least some of the droplets. The extent to which the director configurations become distorted may be a function of the applied field.

[0026] The method may comprise addressing individually or collectively electrode elements formed on at least one of the electrode layers, so as to apply electrical fields of differing strengths to different regions of the active layer. Thus, distinct regions within the active layer may have their average refractive index modified, and may therefore modulate the phase of the incident light, to different extents.

[0027] Embodiments of the present invention will now be described by way of example only with reference to the accompanying diagrammatic drawings in which:

Figures 1a to 1c show schematically a known scattering device incorporating a layer of PDLC material,

Figures 2a and 2b show schematically a known simple diffraction grating device of the prior art,

Figures 3a and 3b show schematically a phase modulator according to an embodiment of the present invention,

Figures 4a and 4b show schematically the device of Figure 3 under the influence of an applied electric field,

Figures 5a and 5b depict schematically an alternative model for the device shown in Figures 3 and 4,

Figures 6a and 6b show schematically another embodiment of the present invention, and

Figures 7a and 7b show, respectively, a transmissive and a reflective holographic optical routing switch such as may incorporate a modulator according to the present invention.

[0028] In normal LC devices the microscopic anisotropy is revealed on a macroscopic level by the careful alignment of the material so that incident light is able to experience the full anisotropy of the LC material used. An isotropic arrangement of LC directors of sufficiently small scale would present incident light with an isotropic medium. In PDLC materials the LC is encapsulated within droplets which are small and which, in the case of the bipolar director configuration, may have many different bipolar (average director) orientations. So that on the whole, despite being an inherently anisotropic material, the LC may be presented in an isotropic way to the incident light. Light, incident on devices according to the present invention in the directions shown below, should to a great extent experience the PDLC environment as isotropic in both the switched and unswitched states. The droplet bipolar axis orientation, or director configuration, within the droplet should be modulated, in order to change the value of refractive index that the light experiences as it passes through the material i.e. the LC is presented in a pseudo-isotropic manner but use is still made of its electro optic response to change the average refractive index of this environment.

[0029] In the use of large droplet PDLCs the droplet size is large enough to be detected by the light as a region of differing refractive index and thus the source of a large scattering effect. In nano sized particles the LC droplets are smaller than the wavelength of the incident light and so simply modify the refractive index the light experiences as it passes through the PDLC. Scattering is still associated with these particles but now it is much reduced.

[0030] Recently, there has been published experimental evidence which would indicate that, due to the factors including small droplet size and prepolymer syrup composition, the polymer dispersed LC addressing fields can be much reduced and the switching

TS0000350

speeds increased.

[0031] In addition, the small size of the PDLC particles restricts the nematic LCs i.e. smaller droplets prevent large director fluctuations, which are characteristic of the nematic phase in the bulk, from occuring (such fluctuations typically occur on the scale of 1μm). These director fluctuations are responsible for thermally induced optical random scatter in nematic liquid crystals. Also the order of the phase may be increased by the restricted size, thus increasing the potential phase modulation available.

[0032] Figures 3 and 4 show schematically an embodiment of phase modulator in accordance with the present invention wherein Figure 3(a) is a side view, and Figure 3(b) a plan view of a modulator device. The lower layer 30 is composed of glass or silicon substrate containing a 1-D array of pixels 32 formed from either ITO or aluminium respectively see Fig 3(b). Since the pixel array is one dimensional there is room for SRAM 34 and high voltage circuitry (not shown). This substrate is covered by an upper glass plate 36 coated uniformly with ITO to make one large transparent electrode. The polymer dispersed LC composite material 38 is sandwiched between them. The polymer dispersed material containing a nematic LC (with positive dielectric) anisotropy may take the forms shown in Fig 4 or Fig 5.

[0033] Firstly, considering Fig 4(a), this shows the director configuration within the droplets 40 in the field-off condition. This type of droplet director configuration is known as bipolar. In the absence of an electric field the bipolar axis of each droplet is assumed to be randomly oriented. The direction of this axis is assumed to be determined by a slight elongation of the droplet which results in the bipolar axis along the long axis, and/or the random pinning of the director on the interior surface of the droplet wall. Light impinging on this material may encounter small enough scattering centres (close to 50nm) to be suitable for Rayleigh scattering. The scattering is therefore very low especially at telecomms wavelengths (1550 and 1320nm). Since the bipolar axes are randomly oriented the refractive index encountered by the incoming light is polarisation independent. An applied electric field couples to the LC dielectric anisotropy and exerts an electric torque on the directors. This is balanced by an elastic torque generated by the distortion of the director pattern away from its equilibrium position. The balance of these two forces determines an equilibrium position of the director and a rotation of the bipolar axis towards an orientation normal to the plane of the SLM. The device is thus able to provide analogue modulation of the refractive index, and hence phase-delay, encountered by the incoming light. Fig. 4(b) shows the final switched configuration in which voltages of different magnitudes have been applied to different pixels 42 to produce several different regions 44 of PDLC, with different switched states, and hence a phase pattern suitable to diffract light into first order spot with high efficiency. Dependent factors for the success of this technology may be random orientation of bipolar axes, and a polymer matrix which is insensitive to polarisation direction.

[0034] Another model for this device is shown in Figs. 5(a), and (b). Here the droplets 50 contain liquid crystal director configurations resulting from normal orientation of the directors at the LC/polymer interface. The resulting configuration is shown pictorially in Figure 5(a) and is described as being 'radial'. Within one droplet the molecular directors adopt all possible orientations and the device in this state is polarisation insensitive to the incoming light 52. With the application of an electric field E across electrodes 54 the director configuration within the droplet distorts to a new equilibrium value which changes as E increases towards the final 'axial' configuration shown in Fig 5(b). Since light impinging normally at a spatial light modulator interface travels along the axial direction, as shown, the director configuration in all surrounding droplets is identical and the device remains polarisation insensitive. This is also true at intermediate values of E since the director configuration is assumed to distort symmetrically between the radial and final axial configuration as shown. The distortion in director profile as E increases does however have the effect of changing the effective refractive index experienced by the incident light, and thus once again the phase delay encountered by the light passing through this device can be modulated in a polarisation-insensitive way.

[0035] A polarisation insensitive amplitude modulator which could be idealised as being transparent in the field on state and highly absorbing in the field off state can be fabricated by the addition of a dichroic dye component to the above-described structures. Figures 6(a) and (b) show schematically a guest-host structure. The dye would be present as a guest within the LC system and as in typical LC dye guest-host systems would orientate its long axis parallel to that of the LC material. The dye molecule 60 would then follow the motion of the surrounding LC molecules 62 as it is turned in an applied electric field. Dichroic dyes typically exhibit maximum light absorption when the incident light is polarised so that its electric field component lies parallel to the dye/LC molecular long axis as shown schematically in Fig. 6(a). Conversely its minimum absorption occurs when the incident light has it's electric field lying perpendicular to the long axes as shown in Fig. 6(b). Such a device provides a polarisation independent light shutter, which is potentially brighter in the bright state than for example any such device which involves crossed polarisers. It may also be possible to tailor the dye to the wavelength of interest. The main difficulty to overcome is to ensure that the dye and liquid crystal come out of solution as much as possible during the polymerization process.

[0036] One particular use of devices such as are described above is in spatial light modulators (SLMs), an example of which will now be described with refer-

TS0000351

ence to Figures 4 and 7.

[0037] Spatial light modulators (SLMs) are devices which modulate the properties of light incident upon them. They may modulate amplitude, phase or polarisation state, and at their core is a material which exhibits an electro optic effect such as a liquid crystalline substance. LC SLMs may consist of a LC enclosed between glass plates coated with ITO (see Figures 4a and 4b). The ITO provides electrodes for addressing the LC whilst being transparent to visible light. Alternatively SLMs may be based on silicon substrates which may operate in reflection or transmission. Such devices used in reflection may use aluminium layers as electrodes for the LC overlaid on them which function also as mirrors for the light reflection. The Al pixels are connected to individual circuitry in the silicon backplane. The advantage of such technology is the density of circuitry which is possible. When used to produce phase holograms FLCs are commonly employed. The advantages of FLCs over other phase modulating LC effects are speed and the fact that the effect is polarisation-insensitive. The helical FLC material, encased within a SLM such that its helix is suppressed, may be switched between two states. The two states represent the effective phase delays of 0 and π. Any holographic image produced by this arrangement is thus limited by the simple binary nature of the display medium. The limitation placed on the applications of such a binary phase medium may be illustrated by consideration of its use in a free space optical routing switch such as might be used in telecomms applications.

[0038] One object is to route an input optical signal from one fibre to any of the output fibres by the use of diffraction patterns displayed in the SLM. Light incident on the slm from the input fibre is 'steered' by the SLM to the output fibres. However when such a hologram is generated by a binary phase medium the replay field contains the diffracted spot (plus higher orders) plus it's inherent symmetric orders. This is a problem in two respects. Firstly, it limits the maximum efficiency of light coupling from the input fibre to the output fibre via the first order diffraction peak to no greater than 41% due to light directed to the zero and inverse orders being lost. Secondly, it reduces the area of the replay field that is useful to the device. In comparison the introduction of an extra level of modulation to four or more allows, to a large extent, the removal of the unwanted orders from the replay field, the maximum efficiency of a four-level hologram being 81%. Alternative LC technologies which would provide the multiple phase levels required (such as obtained by the nematic and deformed helix material) suffer greatly from the fact that their operation is not polarisation-insensitive and hence not as suitable for telecomms applications for which the polarisation state of the incoming light is unknown and variable.

[0039] Apart from the existence of symmetric orders in the replay field the current FLC technology available for this application is limited in several other ways. Whilst the absolute efficiency of the device has been stated as 41% currently it may be less than this if the FLC parameters are not ideal. For maximum efficiency operation the sample must have a half wave thickness and the required tilt angle of 45 degs. Very few commercially available materials exist which possess such high tilt angles and they suffer from the problems that few exhibit pitch lengths of sufficient length for easy helix suppression, the lack of a smectic A phase leading to difficulties in achieving bistability rather than monostability, and the fact that operation at telecomms wavelengths (1550 and 1320nm) requires thicker samples for half wave operation and hence greater difficulty in obtaining good alignment quality and electric fields of suitable magnitudes using current VLSI technology.

[0040] Hence devices based upon alternative LC technologies, which are able to provide both analogue phase modulation from 0 to 2π and polarisation insensitive operation, are advantageous.

[0041] Two examples of binary phase spatial light modulators used for beam steering purposes are given in Figures 7(a) and 7(b) below. Figure 7(a) illustrates the use of a transmissive glass SLM for beam steering. It comprises, two glass plates 70 coated with a layer of ITO, a transparent conductor. The ITO layer on one of the two glass plates has been etched in order to define a row of individual pixels. The other plate is not etched and the ITO layer provides a common ground to all of these pixels. The gap formed by the assembly of these plates is filled with a FLC material 72. Each pixel in the resulting SLM is electrically addressed individually and holographic patterns are displayed on the device by computer 74 control of the pixel switched states. Light 76 incident from the input fibre onto the SLM is both transmitted and diffracted through lens 75 into several diffraction orders. The first order diffraction peak 78 is used to couple light into any one of an array 80 of output fibres. By variation of the pattern displayed on the SLM the first order peak is diffracted into different angles so that it is made to be incident on any chosen output fibre. Thus this device allows the "beam steering" and hence routing of optical signals. Figure 7(b) shows the same basic design transformed into a reflective device by the use of a silicon back plane in place of the pixellated glass plate. The incoming signal is now both reflected and diffracted by the reflective SLM 82, through lens 84,and the output fibre array 86 is located next to the input fibre 88. By suitable addressing of the glass SLM, and suitable electronic design of the silicon back plane device, multiple voltage levels may be applied to individual pixels, allowing for the potential development of these designs into multiple rather than binary phase arrays. Telecomms switches can be envisaged, using this technology, which have one input channel switchable to N output channels or N input channels switchable to any of N output channels (where N is a whole number). The use of material which can exhibit analogue phase variations, such as is potentially exhibited

TS0000352

by the materials described herein, can result in the development of efficient phase holograms suitable for this application and many others such as optical correlation, WDM filters and projection displays.

Claims

1. A light modulator for modulating the phase of incident light in an analogue manner, the modulator comprising an active electro optical layer of polymer-dispersed liquid crystalline (PDLC) material sandwiched between two electrode layers, at least one of which is transparent to the incident light, wherein the PDLC material contains liquid crystal droplets located substantially randomly within the active layer and having a length less than the wavelength of the incident light, such that the application of an electric field across the electrodes influences the director configurations of the droplets to modify the average refractive index of the active layer, and therefore modulates the phase of the incident light in an analogue manner.

2. A modulator according to claim 1, wherein the modulator modulates the phase of the incident light, in a polarisation-independent manner.

3. A modulator according to claim 1 or claim 2, wherein the application of the electric field distorts the director configurations of at least some of the droplets.

4. A modulator according to claim 3, wherein the extent of the distortion is a function of the applied field.

5. A modulator according to any of claims 1 to 4, wherein the light modulator is arranged to modulate the phase of transmitted incident light.

6. A modulator according to claim 5, wherein both electrode layers are transparent.

7. A modulator according to any of claims 1 to 5, wherein the modulator is arranged to modulate the phase of reflected incident light.

8. A modulator according to claim 7, wherein one of the electrode layers is arranged to reflect the incident light which has passed through the active layer.

9. A modulator according to any of claims 1 to 8, wherein the or each electrode layer comprises a substrate of glass or silicon.

10. A modulator according to any of claims 1 to 9, wherein the transparent electrode layer comprises a glass substrate coated in Indium-Tin oxide (ITO) or a silicon substrate which is transparent at telecommunications wavelengths.

11. A modulator according to claim 7 or claim 8, wherein the reflective electrode comprises a glass or silicon substrate coated in a reflective, conductive material, such as a metal.

12. A modulator according to any of claims 1 to 11, wherein the liquid crystal material is a nematic material.

13. A modulator according to any of claims 1 to 12, wherein the modulator forms an optical switch such as a spatial light modulator (SLM) for the holographic routing of optical signals.

14. A modulator according to any of claims 1 to 13, wherein at least one of the electrode layers has formed upon it individual electrode elements, which are addressable individually or collectively and which form a one or two dimensional array.

15. A method of modulating the phase of light in an analogue manner, the method comprising causing the light to be incident upon a modulator device comprising an active electro optical layer of polymer-dispersed liquid crystalline (PDLC) material sandwiched between electrode layers, at least one of which is transparent to the incident light, wherein the PDLC material contains liquid crystal droplets located substantially randomly within the active layer and having a length less than the wavelength of the incident light, and applying an electric field across the electrodes to influence the director configurations of the droplets so as to modify the average refractive index of the active region, and thereby modulate the phase of the incident light in an analogue manner.

16. A method according to claim 15 comprising modulating the phase of the incident light in a polarisation-independent manner.

17. A method according to claim 15 or claim 16 comprising distorting the director configurations of at least some of the droplets.

18. A method according to any of claims 15 to 17, wherein the extent to which the director configurations become distorted is a function of the applied field.

19. A method according to any of claims 15 to 18 comprising addressing individually or collectively electrode elements formed on at least one of the electrode layers, so as to apply electrical fields of

TS0000353

differing strengths to different regions of the active layer.

TS0000354

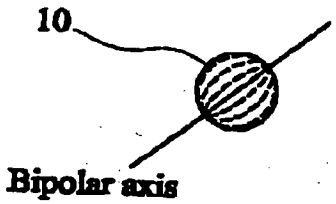

FIG. 1(a)
Bipolar droplet

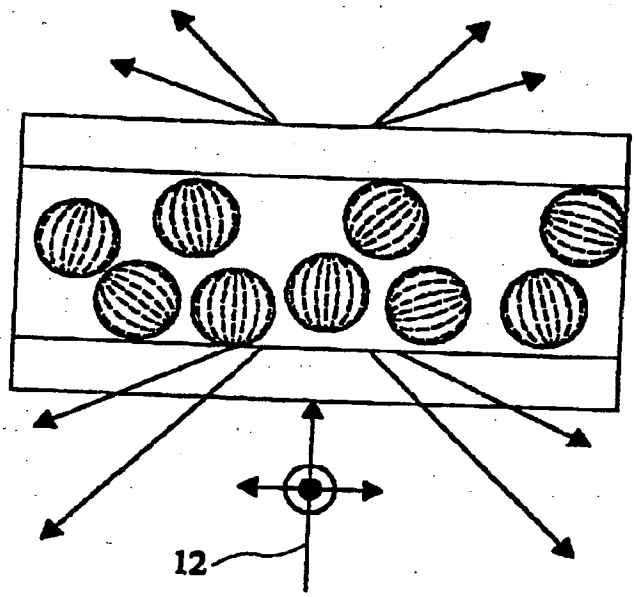

FIG. 1(b)
Scattering state with E=0

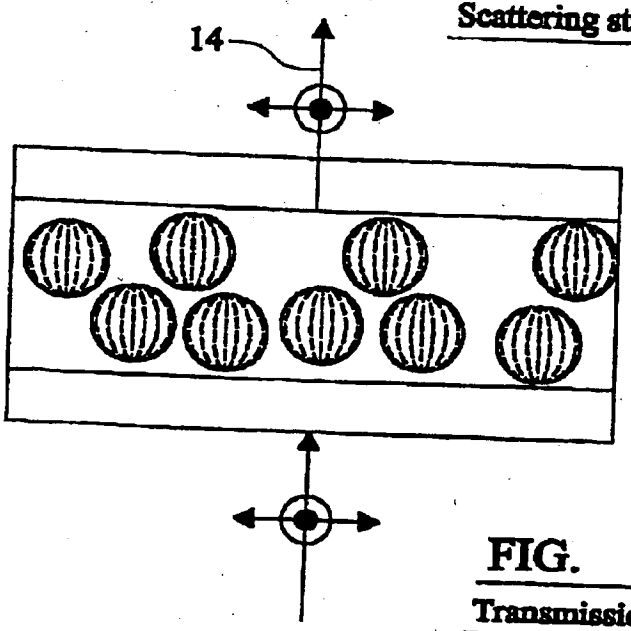

FIG. 1(c)
Transmission E≠0

TS0000355

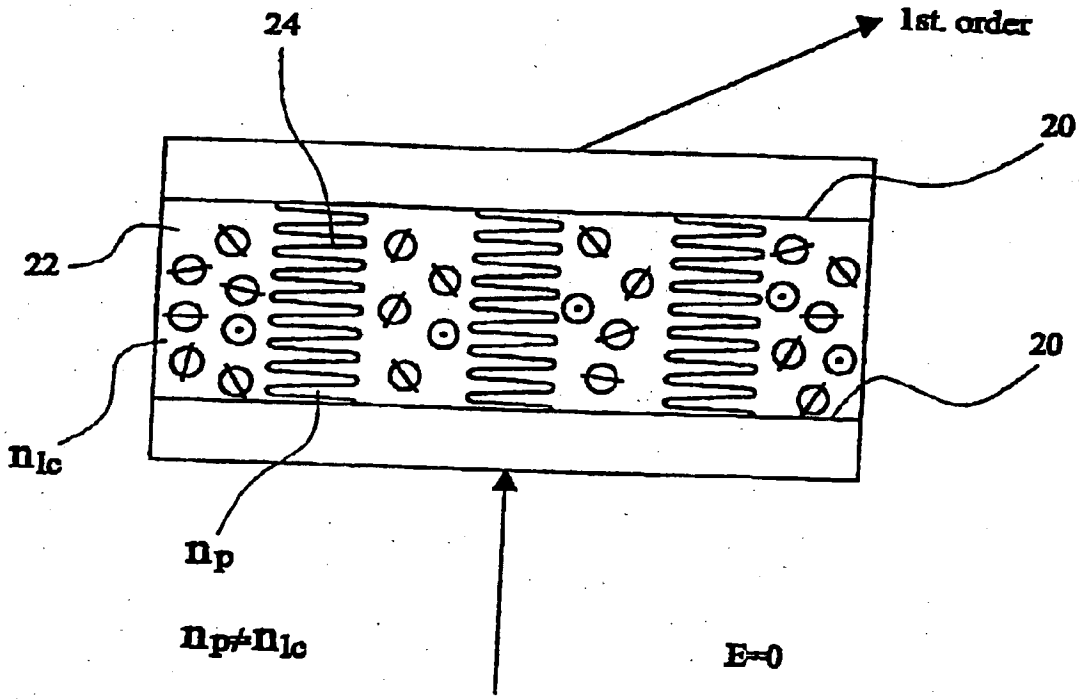
24
1st. order
20
22
20
n_{lc}
n_p
$n_p \neq n_{lc}$
E=0

FIG. 2(a)

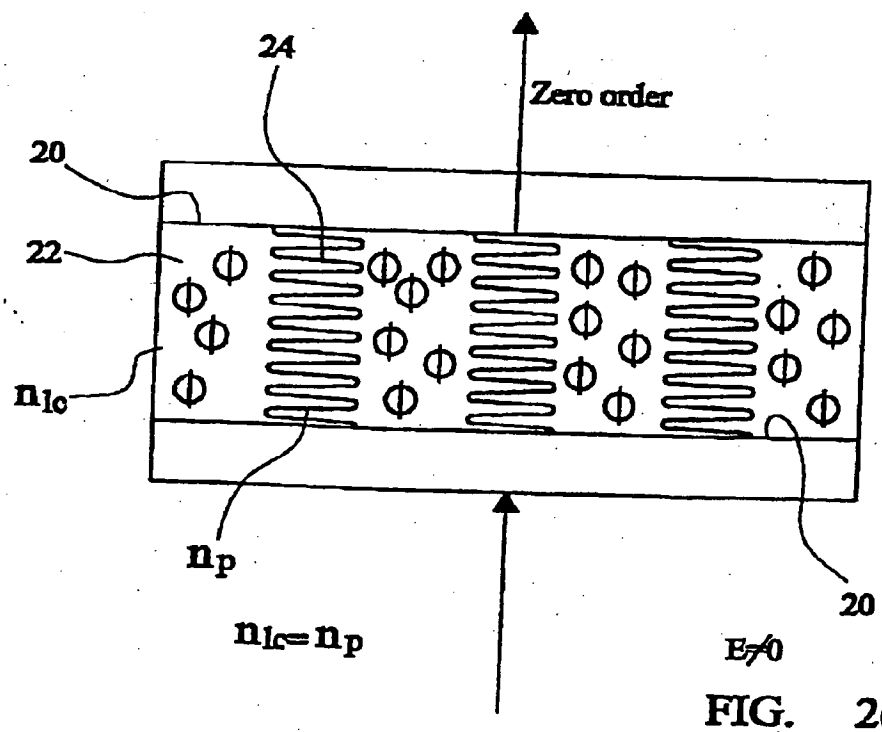
24
Zero order
20
22
n_{lc}
n_p
20
$n_{lc} = n_p$
E≠0

FIG. 2(b)

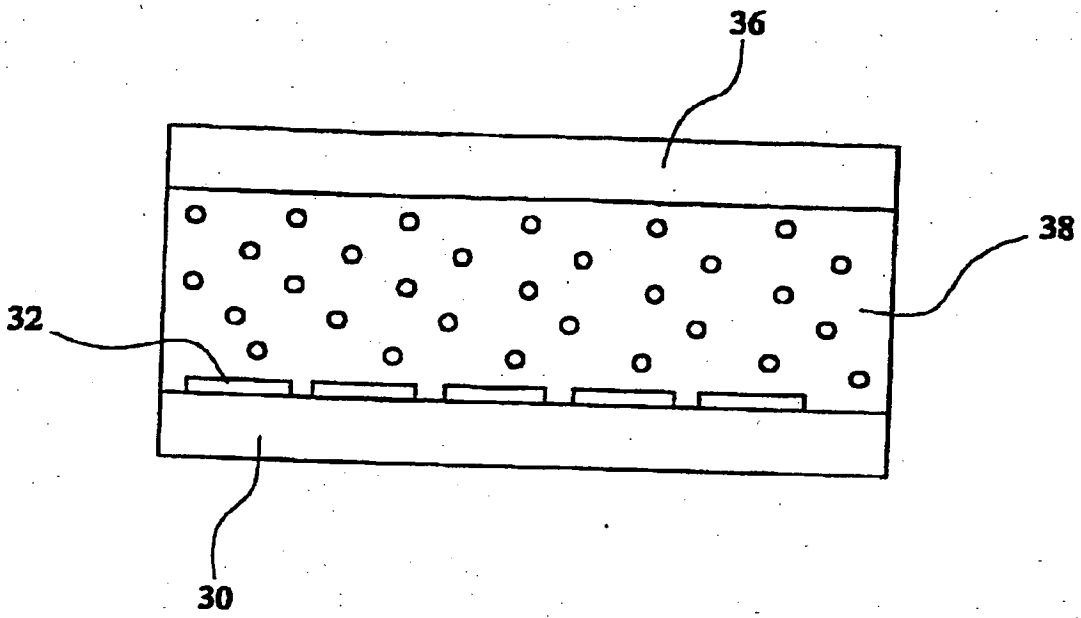

FIG. 3(a)

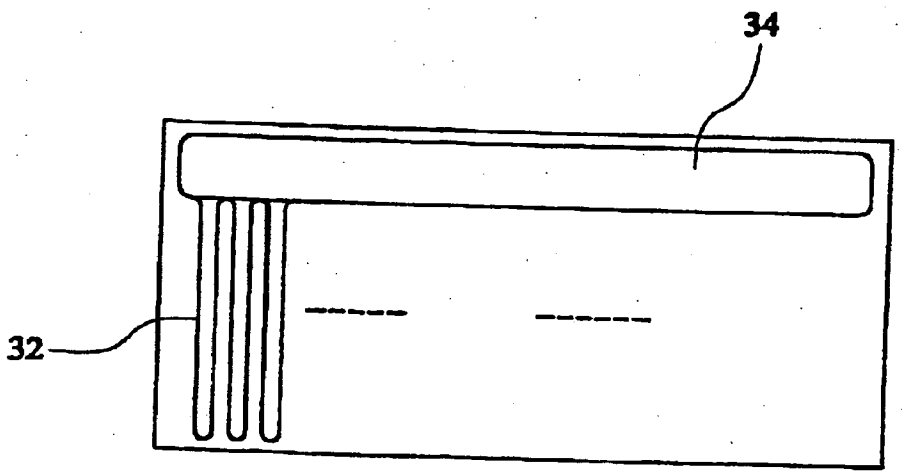

FIG. 3(b)

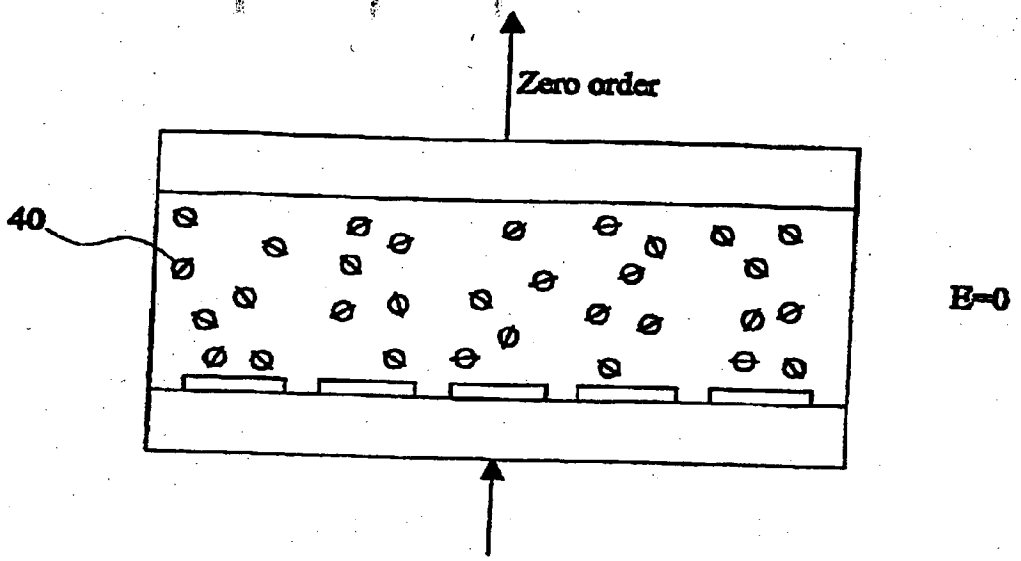

FIG. 4(a)

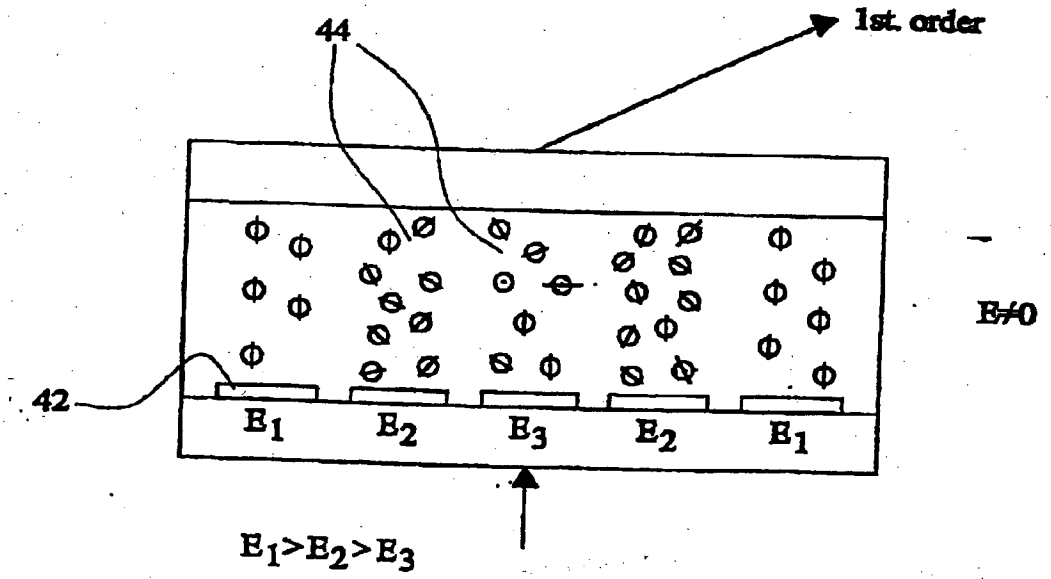

$E_1 > E_2 > E_3$

E_1 = Fully switched

E_2 = Partially switched

E_3 = not altered i.e. $E_3 = 0$

FIG. 4(b)

TS0000358

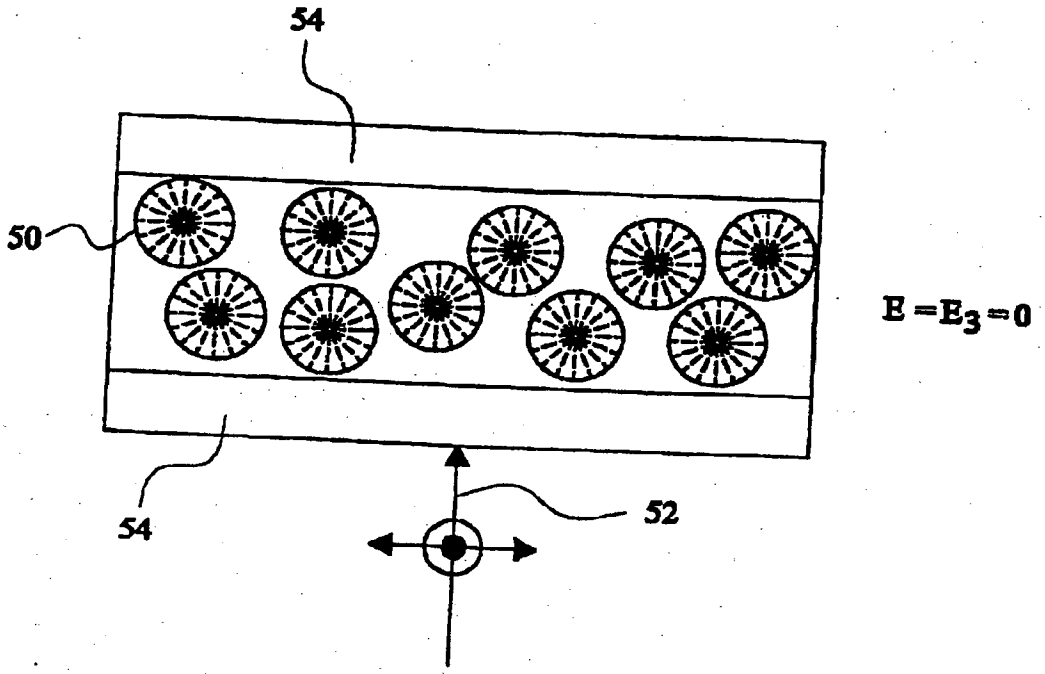

FIG. 5(a)

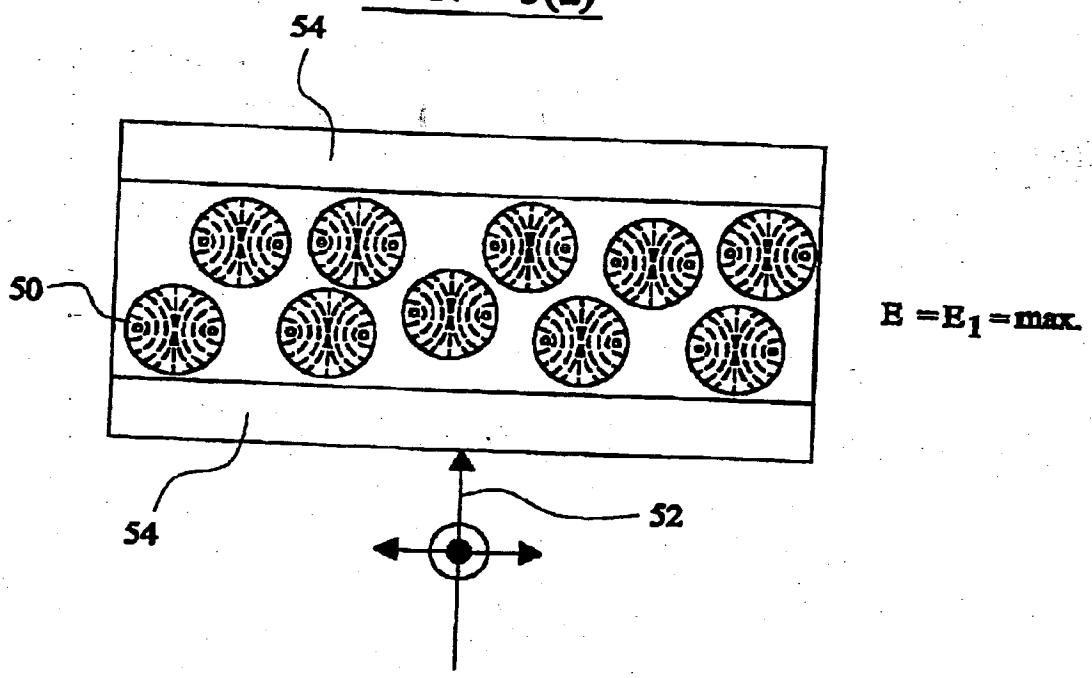

FIG. 5(b)

TS0000359

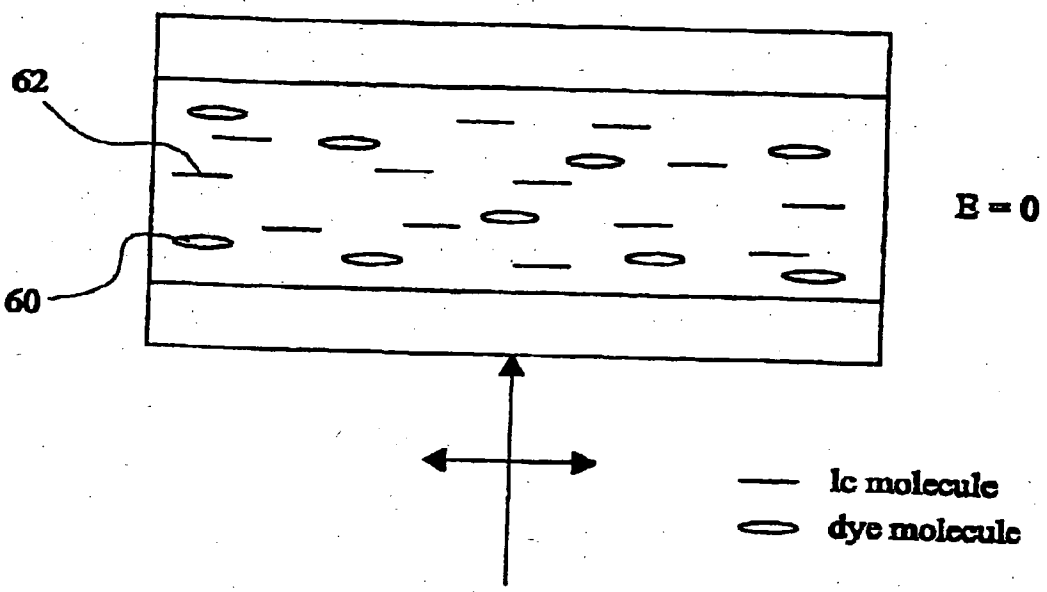

FIG. 6(a)

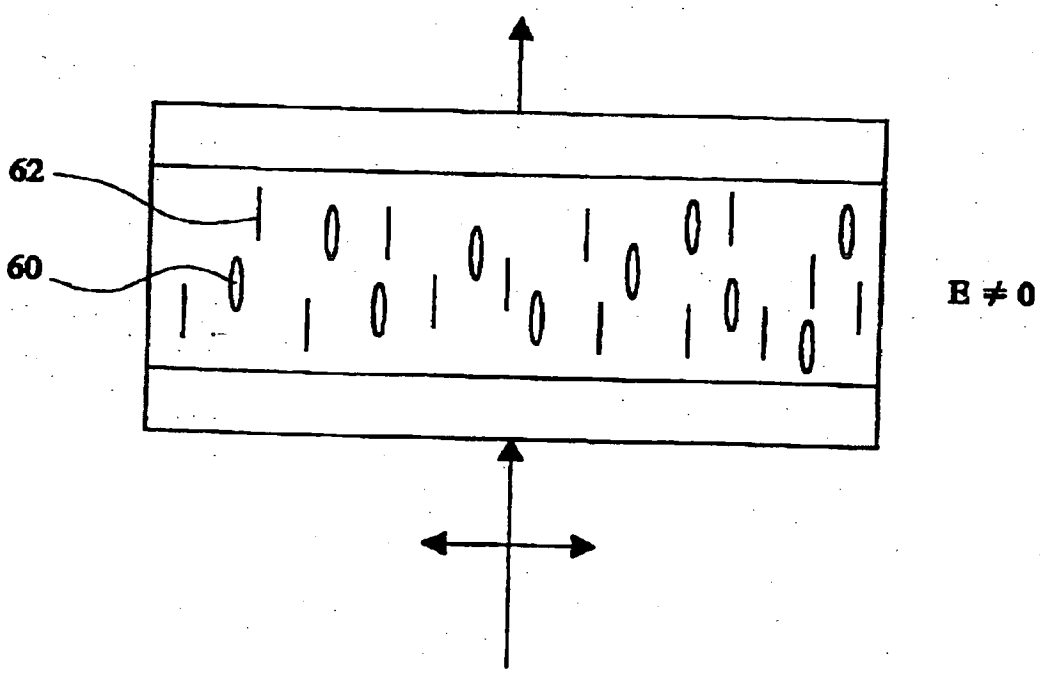

FIG. 6(b)

TS0000360

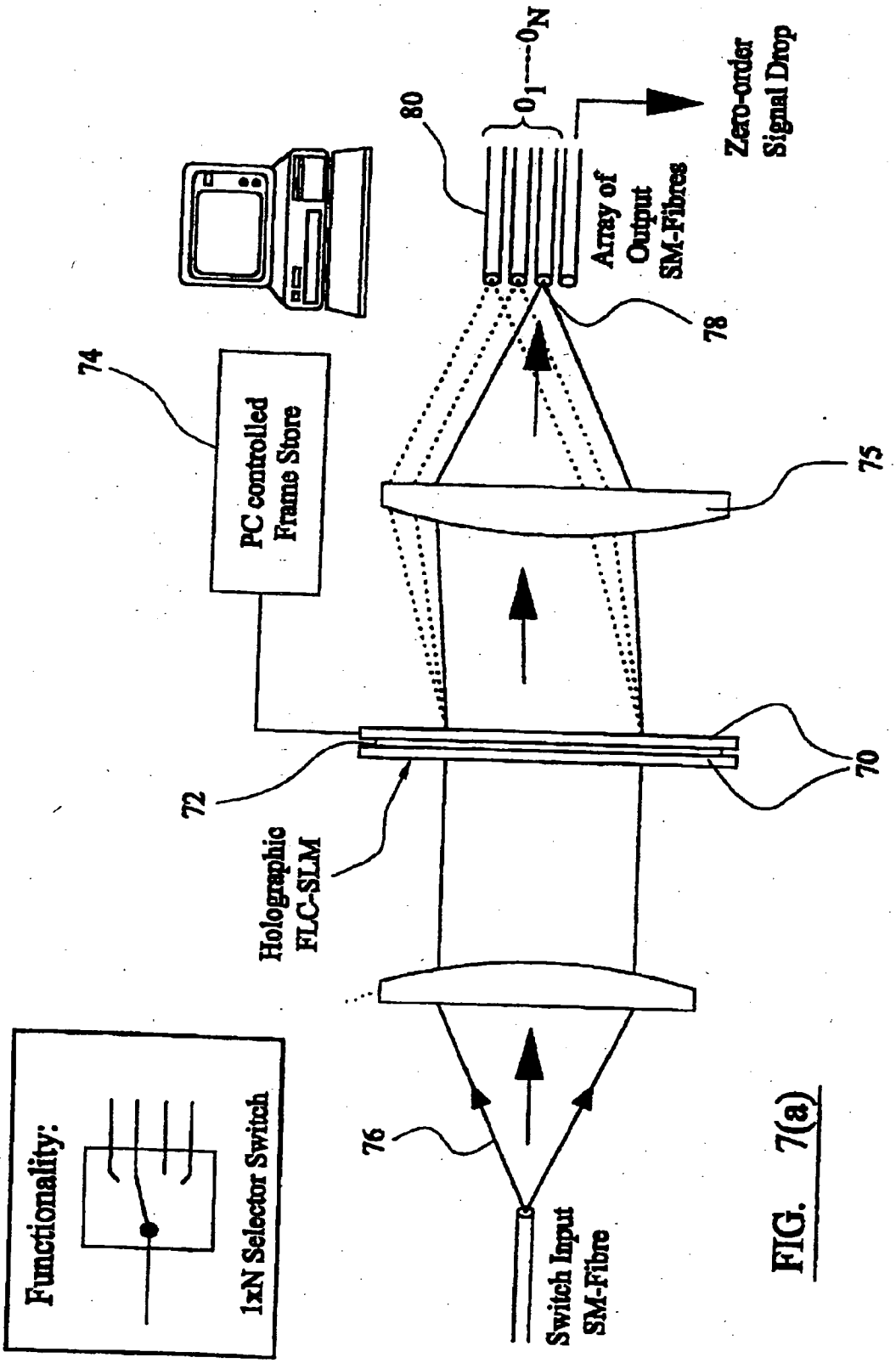

FIG. 7(a)

TS0000361

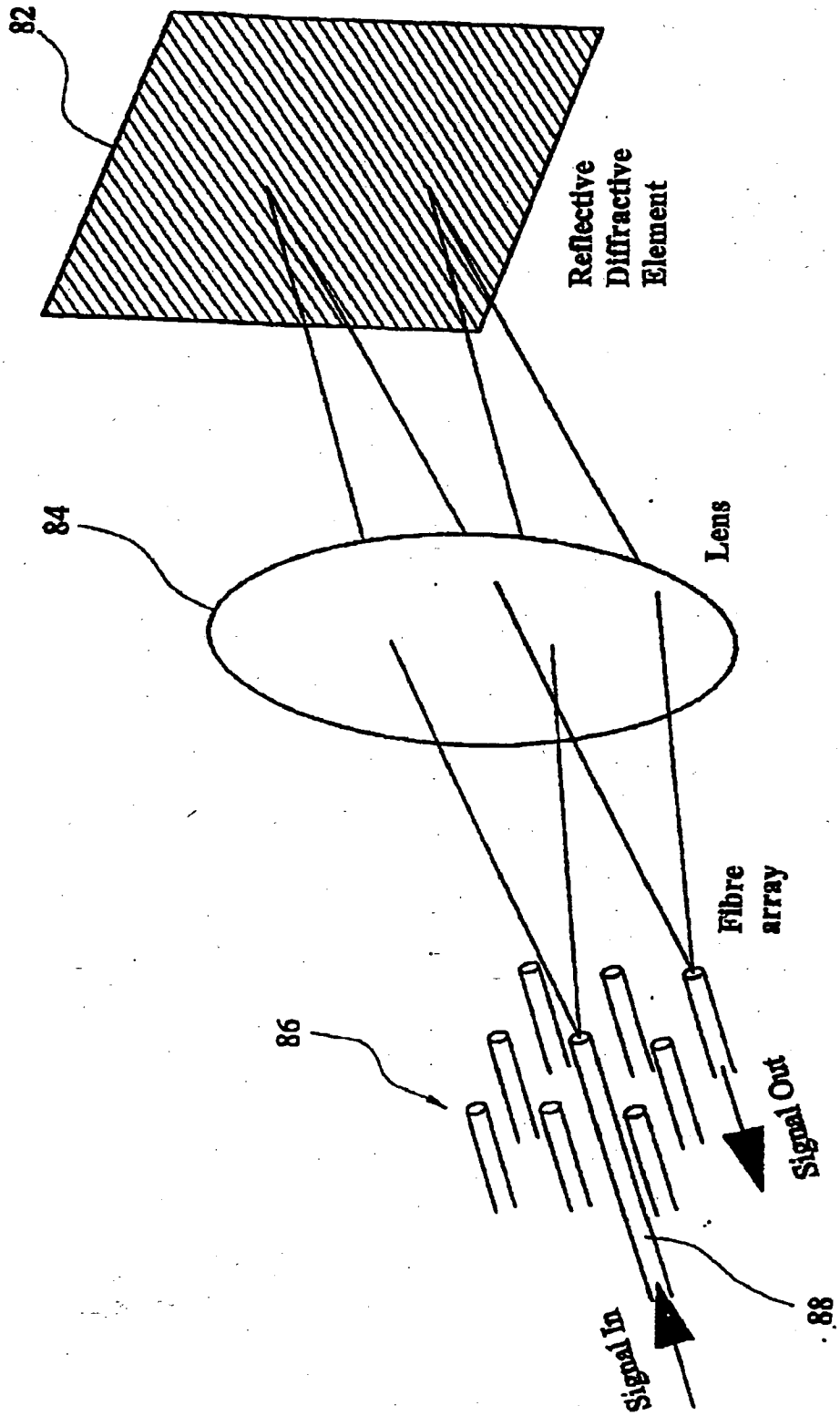

FIG. 7(b)

TS0000362

European Patent Office

EUROPEAN SEARCH REPORT

Application Number
EP 00 30 3355

DOCUMENTS CONSIDERED TO BE RELEVANT

Category	Citation of document with indication, where appropriate, of relevant passages	Relevant to claim	CLASSIFICATION OF THE APPLICATION (Int.Cl.7)
X	MATSUMOTO S ET AL: "TUNABLE WAVELENGTH FILTER USING NANO-SIZED DROPLETS OF LIQUID CRYSTAL" IEEE PHOTONICS TECHNOLOGY LETTERS,US,IEEE INC. NEW YORK, vol. 11, no. 4, April 1999 (1999-04), pages 442-444, XP000830087 ISSN: 1041-1135 * page 442, left-hand column, line 20 - page 443, left-hand column, line 32 * * page 444, left-hand column; figures 1,2,4,5 *	1-6,9, 10,12, 15-18	G02F1/1334 G02F1/29
Y	WO 98 04650 A (SCIENCE APPLIC INT CORP) 5 February 1998 (1998-02-05) * page 2, line 21 - page 4, line 32 * * page 8, line 1 - page 19, line 37 * * page 26, line 29 - page 29, line 8; figures 1,9 *	1-7,9, 10,12-19	
Y	FR 2 679 048 A (THOMSON CSF) 15 January 1993 (1993-01-15) * page 4, line 20 - line 31 * * page 8, line 10 - page 12, line 35; figures 5-10 *	1-7,9, 10,12-19	TECHNICAL FIELDS SEARCHED (Int.Cl.7) G02F
A	PATENT ABSTRACTS OF JAPAN vol. 1997, no. 07, 31 July 1997 (1997-07-31) -& JP 09 068685 A (NIKON CORP), 11 March 1997 (1997-03-11) * abstract *	8,11	

The present search report has been drawn up for all claims

Place of search	Date of completion of the search	Examiner
MUNICH	27 July 2000	Wahl, M

CATEGORY OF CITED DOCUMENTS

X : particularly relevant if taken alone
Y : particularly relevant if combined with another document of the same category
A : technological background
O : non-written disclosure
P : intermediate document

T : theory or principle underlying the invention
E : earlier patent document, but published on, or after the filing date
D : document cited in the application
L : document cited for other reasons

& : member of the same patent family, corresponding document

EPO FORM 1503 03.82 (P04C01)

TS0000363

ANNEX TO THE EUROPEAN SEARCH REPORT ON EUROPEAN PATENT APPLICATION NO. EP 00 30 3355

This annex lists the patent family members relating to the patent documents cited in the above-mentioned European search report. The members are as contained in the European Patent Office EDP file on
The European Patent Office is in no way liable for these particulars which are merely given for the purpose of information.

27-07-2000

Patent document cited in search report	Publication date	Patent family member(s)	Publication date
WO 9804650 A	05-02-1998	US 5942157 A	24-08-1999
		AU 4041597 A	20-02-1998
		EP 0958329 A	24-11-1999
FR 2679048 A	15-01-1993	NONE	
JP 09068685 A	11-03-1997	US 5949503 A	07-09-1999

EPO FORM P0459

For more details about this annex : see Official Journal of the European Patent Office, No. 12/82

TS0000364

(12) INTERNATIONAL APPLICATION PUBLISHED UNDER THE PATENT COOPERATION TREATY (PCT)

(19) World Intellectual Property Organization
International Bureau

(43) International Publication Date
10 October 2002 (10.10.2002)

PCT

(10) International Publication Number
WO 02/079870 A2

(51) International Patent Classification[7]: G02F 1/29

(21) International Application Number: PCT/GB02/01464

(22) International Filing Date: 27 March 2002 (27.03.2002)

(25) Filing Language: English

(26) Publication Language: English

(30) Priority Data:
0107742.9 28 March 2001 (28.03.2001) GB

(71) Applicant *(for all designated States except US)*: **THOMAS SWAN & CO. LTD.** [GB/GB]; Crookhall, Consett, County Durham DH8 7ND (GB).

(72) Inventor; and

(75) Inventor/Applicant *(for US only)*: **HOLMES, Melanie** [GB/GB]; 39 Orford Street, Ipswich IP1 3PE (GB).

(74) Agent: **NEOBARD, William, J.**; W.H. Beck, Greener & Co., 7 Stone Buildings, Lincoln's Inn, London WC2A 3SZ (GB).

(81) Designated States *(national)*: AE, AG, AL, AM, AT, AU, AZ, BA, BB, BG, BR, BY, BZ, CA, CH, CN, CO, CR, CU, CZ, DE, DK, DM, DZ, EC, EE, ES, FI, GB, GD, GE, GH, GM, HR, HU, ID, IL, IN, IS, JP, KE, KG, KP, KR, KZ, LC, LK, LR, LS, LT, LU, LV, MA, MD, MG, MK, MN, MW, MX, MZ, NO, NZ, OM, PH, PL, PT, RO, RU, SD, SE, SG, SI, SK, SL, TJ, TM, TN, TR, TT, TZ, UA, UG, US, UZ, VN, YU, ZA, ZM, ZW.

(84) Designated States *(regional)*: ARIPO patent (GH, GM, KE, LS, MW, MZ, SD, SL, SZ, TZ, UG, ZM, ZW), Eurasian patent (AM, AZ, BY, KG, KZ, MD, RU, TJ, TM), European patent (AT, BE, CH, CY, DE, DK, ES, FI, FR, GB, GR, IE, IT, LU, MC, NL, PT, SE, TR), OAPI patent (BF, BJ, CF, CG, CI, CM, GA, GN, GQ, GW, ML, MR, NE, SN, TD, TG).

Published:
— *without international search report and to be republished upon receipt of that report*

For two-letter codes and other abbreviations, refer to the "Guidance Notes on Codes and Abbreviations" appearing at the beginning of each regular issue of the PCT Gazette.

(54) Title: BEAM STEERING DEVICE

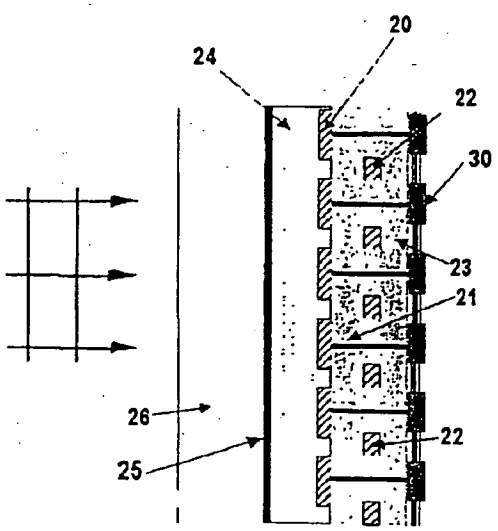

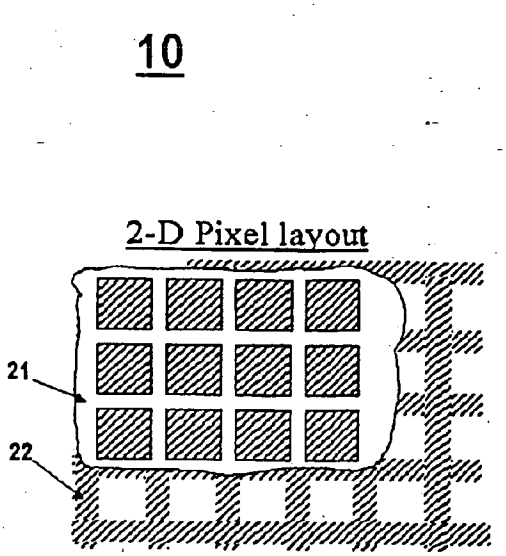

(57) Abstract: A beam steering device uses a liquid crystal with an array of back electrodes. Voltages are applied to the array to cause a desired phase distribution across the array, the distribution being selected to steer a beam incident upon the array into a desired direction. Reflective elements are disposed to reflect light incident in the spaces between the electrodes to reduce losses and to smooth the transitions in phase between adjacent electrodes.

WO 02/079870 A2

AP

BEAM STEERING DEVICE

The present invention relates to a beam steering device, to a method of steering a beam of light and to a routing switch.

Beam steering may be effected by liquid crystal over silicon spatial light modulators (SLMs) consisting of an array of pixellated elements, each formed by a back-reflecting electrode, a front-electrode on a cover glass that is often common to all the pixels, and inbetween the two electrodes a layer of liquid crystal to which an electric field is applied using the front and back electrodes. There may also be intermediate optical layers between the liquid crystal and back electrode. The drive circuits for the back and front electrodes may form part of an underlying silicon backplane, or be disposed on that backplane. Optical quality planarisation, as is required in VLSI manufacturing to enable sub-micron optical lithography, can be used over the drive circuit components such that the back electrodes are deposited on an optical quality surface and therefore may act also as a high quality mirror. In certain SLMs, the main subject of this invention, individual back electrodes are isolated electrically by a 'dead-space' formed between them, for example by etching.

Such SLMs may be formed using a silicon process to provide a liquid crystal over silicon spatial light modulator. In such a device, typically the width of the dead-space is between one and two times the minimum feature size of the CMOS process.

SLMs using liquid crystals are attractive for signal processing applications in that they allow modulation of light phase and/or amplitude and/or birefringence. Both binary phase and multiple (>2 levels) phase modulation can be implemented in a polarisation-independent manner, allowing the construction of beam-steering devices for communications routing applications. Multiple-phase modulating arrays are particularly attractive for optical routing applications because they can be used to mimic the effect of a tiltable mirror and steer beams between source(s) and receiver(s). Beam steering devices using SLMs display hologram patterns on arrays of pixellated elements with the pixels being separately controllable so as to select the pitch of the hologram grating. By using multiple phase liquid crystals the phase difference from pixel-to-pixel can be controlled as desired. Critical performance requirements for optical routing are insertion loss, crosstalk, switch reconfiguration time and physical size, the latter especially so in metro area applications where routing nodes may often be located in customer premises.

Crossbar switch design studies show that the physical length of a switch is proportional to the square of the pixel pitch. Other types of routing architectures have lengths that may be linearly proportional to the pixel pitch. Hence compact optical switches will require SLMs with very small pixels. However, the insertion loss is also an important parameter: for multiple phase modulating SLMs, the fundamental limit to the insertion loss is set by the relative width of the dead-space, compared to the pixel pitch. Practically this sets a lower limit to the pixel

pitch and hence to the switch physical size. One way to overcome this limit is to use a CMOS process with a smaller feature size and hence reduce the dead-space width, which allows a reduction in the pixel pitch for the same insertion loss penalty. However, smaller CMOS processes are associated with lower operating voltages and hence may require a thicker cell for the same range of phase modulation. This increases the switch reconfiguration time. Although this problem may be addressed by higher supply voltages and high voltage transistors, the maximum available voltage still decreases with reducing feature size. Another problem with the dead-space is what happens to the light that passes through: it may bounce around inside the substrate and emerge elsewhere (coming back out through another dead-space) causing crosstalk.

A paper entitled "A diffraction based polarisation independent light valve" (D. Ulrich, C. Tombling, J. Slack, P. Bonnett, B. Henley, M. Robinson and D. Anderson) was presented at a meeting of the Institution of Electrical Engineers on 17th March 2000. This paper discusses the use of diffractive LC light valves for projection displays and projection and viewer systems. In a device having front electrodes in the form of plural linear strips, and plural rear pixel electrodes defining the pixels, with the front and rear electrodes sandwiching a liquid crystal, it is acknowledged that to provide high contrast ratio the gaps between the pixels should have an underlying mirror. In the described light valve, the period of the grating is fixed as the pitch of the front strip electrodes. Control of the voltage on the rear electrode is used to create a fixed pitch grating of variable efficiency. In the described embodiment, there are four front electrodes per

pixel. Where these front electrodes are driven with +V, -V, +V, -V, it will be seen that to the side of the inter-pixel gap there will be one front electrode at +V and one front electrode at -V. The effect of the underlying mirror electrodes in the inter-pixel gap is said to be to minimise diffraction. It is suggested in the paper that the underlying mirror could be included in a VLSI backplane by modifying the lightshield processes used to protect the silicon devices from visible radiation.

An embodiment of the described method of the present invention exploits correlation effects between the director orientation of adjacent liquid crystal molecules and also the potential for multiple overlying layers of circuitry in state-of-the-art CMOS manufacturing.

Embodiments of the invention provide three significant improvements in device performance by making the dead-space reflective. In a first embodiment the loss penalty due to the dead-space is reduced significantly. In a second embodiment, for an acceptable loss penalty, much smaller pixels may be used, allowing the fabrication of much more compact optical switches. In a third embodiment, for an acceptable loss penalty, larger CMOS processes may be used allowing the fabrication of switches with a faster reconfiguration time (see above). Embodiments also provide improved crosstalk as the light incident on the dead-space is reflected back out again instead of bouncing around inside the substrate.

According to a first general aspect of the invention there is provided a device for steering a beam of light, the device comprising an array of elements, said beam of

light being incident upon said array of elements, each element having a reflective back electrode and a front electrode, the back and front electrodes being disposed respectively behind and in front of a liquid crystal layer, the back electrodes being spaced apart to define said array, and a reflective layer disposed behind the back electrodes to reflect light incident in the spaces to between the back electrodes substantially in phase with the light reflected from the back electrodes.

The beam steering device of the invention allows a ramped phased shift, for example a piecewise linear phase distribution, to be created across an array of elements to direct the beam of light incident on the array to the desired direction. Thus the device of the invention is capable of routing light beams to selectable directions by setting up a desired phase distribution across an array of phase modulating elements, and using that distribution across the array to steer light incident upon the array. Although the voltages to create the phase shifts may be spatially periodic, the physical form of the device does not constrain the spatial periodicity nor the phase distribution, excepting the constraint of the maximum available phase modulation. In the context of a display it is desirable to create a white pixel on a screen by deflecting a beam incident on a single pixel electrode by a first fixed amount, and to create a black pixel on the screen by specular reflection of that beam, followed by its absorption: this desideratum can be met by a fixed diffraction grating per pixel which can be turned on or off. It will be appreciated by those skilled in the art that while a fixed grating can be used to switch between two directions, it is not capable of switching between

several different directions. For multidirectional steering, a fixed grating is inappropriate.

In one embodiment there is provided a single front electrode per element.

In a preferred embodiment, the front electrode is common to the array of elements.

In one embodiment the device has drive circuitry on a substrate, and a planarising layer disposed on said drive circuitry, the back electrodes are disposed on said planarising layer, and respective wirings pass through the planarising layer from the back electrodes to the drive circuitry, and a portion of the drive circuitry provides the reflective layer.

In another embodiment drive circuitry is disposed on a substrate, and a planarising layer is disposed on said drive circuitry, wherein said back electrodes are disposed on said layer, respective wirings passing through said planarising layer from said back electrodes to said drive circuitry, and wherein said reflective layer is disposed within said planarising layer.

In yet another embodiment drive circuitry is disposed on a substrate, a first planarising layer is disposed on said drive circuitry wherein said reflective layer is disposed on said first planarising layer, and a second planarising layer is disposed on said reflective layer and said first planarising layer wherein said back electrodes are disposed on said second planarising layer, wherein

respective wirings pass through said planarising layers from said back electrodes to said drive circuitry.

Advantageously a further planarising layer is disposed over or level with said back electrodes.

Conveniently a waveplate is disposed over said back electrodes.

Conveniently said reflective layer is composed of metal.

In one embodiment said reflective layer extends only to substantially fill said spaces between said back electrodes.

In another said reflective layer extends beneath said back electrodes.

In yet another said reflective layer extends only partway across said spaces.

Conveniently the device further comprises circuitry for connecting at least a portion of said reflective layer to a selected potential.

In another embodiment, each element has plural front electrodes.

According to a second aspect of the invention there is provided an optical routing switch comprising at least one beam steering device in accordance with the first aspect of the invention.

According to a third aspect of the invention there is provided a method of steering light having a first direction to a desired second direction, the method comprising:

causing a beam of said light to be incident upon a reflective liquid crystal device;

selecting a desired spatial phase modulation characteristic for said liquid crystal device thereby to provide a deflection from said first direction to said second direction; and

providing a spatial distribution of phase levels across said liquid crystal device to at least approximate to said desired characteristic;

wherein the step of providing a spatial distribution of phase levels comprises driving said liquid crystal at sequential spaced driving locations to produce rising discrete phase levels; and

smoothing transitions in phase between said spaced driving locations by providing further locations between said spaced driving locations, and reflecting said light through said liquid crystal in said further locations.

By this means, even though the phase levels are discrete steps, the transitions are smooth and in embodiments this increases diffraction efficiency.

Conveniently said step of driving said liquid crystal comprises providing electrodes at said discrete driving locations, and applying voltages to sequential electrodes to cause said rising phase levels due to the liquid crystal.

Conveniently said step of smoothing comprises providing spaces between the electrodes at said further locations and providing reflective elements in the spaces and behind the electrodes.

By making use of the dead spaces between the electrodes, the performance of the SLM can actually be increased over an ideal SLM having no dead spaces between electrodes having discrete voltages applied thereto.

In one embodiment said electrodes are reflective whereby said liquid crystal device is reflective.

In another a reflective layer is disposed behind the electrodes whereby said liquid crystal device is reflective.

The step of providing reflective elements preferably comprises disposing the reflective elements at a distance behind said electrodes such that light reflected thereby leaves said liquid crystal device substantially in phase with light reflected by said electrodes.

Exemplary preferred embodiments of the invention will now be described with reference to the accompanying drawings, in which:

Figure 1 shows the relationship of insertion loss to pixel pitch and dead-space width;

Figure 2A shows the index ellipsoid in the bulk of the cell that is away from the influences of the alignment layers and under no-field conditions;

Figure 2B shows the direction of tilt variation under applied field conditions;

Figure 3 is a partial cross-sectional schematic view through an SLM showing varying alignment with back electrode potential per pixel;

Figure 4 shows a graph comparing ideal phase modulation with 8-phase level modulation;

Figure 5 shows the loss penalty for one-dimensional phase modulation due to inter-pixel dead-space;

Figure 6 shows a cross-sectional view and an elevation of a first embodiment of a beam steering device with reflecting dead-space in accordance with the invention;

Figure 7 shows a cross-sectional view and an elevation of a second embodiment of a beam steering device with reflecting dead-space in accordance with the invention;

Figure 8 shows a cross-sectional view and an elevation of a third embodiment of a beam steering device with reflecting dead-space in accordance with the invention;

Figure 9 shows a partial cross-sectional view through a beam steering device in accordance with the invention showing the effects of off-normal incidence; and

Figure 10 shows a further embodiment of a beam steering device accordance with the invention, in which a portion of the reflective layer is isolated from other portions, and connected via circuitry to a selected potential.

In the various figures, like reference numerals refer to like parts.

In the following paragraphs the insertion loss penalties and lower limits to the pixel pitch imposed by

the dead-space as currently fabricated are described and quantified.

The effect of the dead-space on the diffraction efficiency is analysed by considering the modulation at the SLM (one or more of amplitude phase and birefringence) as the product of the modulation of an ideal SLM (with no dead-space) and a pixel 'window' function that has the value of 1 over the back electrodes, and 0 over the dead-space. To this product is added the modulation applied by the dead-space to whatever light is reflected from the optical planarising layer that is exposed between the back electrodes. Since this planarising layer may be quartz, with a refractive index close to that of the liquid crystal, it may be assumed to a first approximation that none of the light incident on the dead-space is reflected. Fourier analysis then shows that the diffraction efficiency into the intended beam-steering direction is reduced for a 2-D array of square pixels by a factor given in equation (1), where d is the width of the dead-space and p is the pixel pitch.

$$\text{actual 2-D efficiency} = (1-d/p)^4 \cdot \text{efficiency of ideal SLM} \quad (1)$$

Referring to Figure 1, the reduction factor is plotted as an insertion loss penalty (in dB) as a function of the pixel pitch, and for dead-space widths of 0.14 μm, 0.26 μm, 0.5 μm, corresponding to twice the minimum feature size of 70 nm, 0.13 μm and 0.25 μm CMOS processes respectively. This insertion loss penalty is for a single SLM.

However in many routing devices two SLMs are provided, and hence the switch insertion loss penalty would be twice the value shown in Figure 1.

For the example of a 3 μm pixel pitch, the insertion loss penalty in a crossbar routing switch would be 6.3 dB for a dead-space width of 0.5 μm, decreasing to 3.1 dB and 1.6 dB for dead-space widths of 0.26 μm and 0.14 μm, respectively. The physical length of the beam-steering region inside such a crossbar switch is proportional to the square of the pixel pitch, and hence there is a direct trade-off between size and insertion loss.

For a 1-D array of (rectangular) pixels, the diffraction efficiency into the intended beam-steering direction is reduced by a factor given in equation (2).

$$\text{actual 1-D efficiency} = (1-d/p)^2 \cdot \text{efficiency of ideal SLM} \quad (2)$$

Hence the loss penalties for 1-D phase modulation can be obtained from Figure 1 by halving the value shown in the graph.

Next is an explanation of the physics of polarisation-independent multiple phase modulation and a description of how the liquid crystal tends to behave in the regions between electrodes, i.e. above the dead-space, assuming that alignment is good and the dead-space narrow enough such that random domains or disclinations do not appear in this region.

As discussed in our co-pending patent application WO 01/25840, multiple phase modulation is conveniently achieved in liquid crystal by aligning the material such that under an applied field, the director (or more properly the uniaxial axis) changes its tilt in a plane perpendicular to the front and back electrodes. Polarisation-independent operation of a beam-steering SLM for routing applications may be achieved by depositing a quarter-wave plate on top of the back electrodes, with the orientation of the quarter-wave plate axes such that light polarised in the plane of the tilt of the director is reflected back through the SLM with its plane of polarisation perpendicular to the plane of the tilt, and vice versa.

Light travelling through a crystalline medium can be considered as the superposition of two propagating modes. These two modes travel along with different phase velocities, that may be calculated using the geometric construction of the index ellipsoid (indicatrix). A uniaxial medium is characterised by an indicatrix that is an ellipsoid of revolution around an axis that is usually parallel to the director of the liquid crystal. The long axis of the ellipsoid has a length equal to the extraordinary refractive index n_e, whereas both short axes lie normal to the long axis taking the same length, n_0 (ordinary refractive index), as shown in Figure 2A. Construct a plane perpendicular to the wavefront propagation vector. The intersection of this plane with the ellipsoid defines an ellipse (index ellipse). The directions of the major and minor axes of this ellipse define the two orthogonal polarisation modes, while the

lengths of these two axes define the refractive index experienced by the corresponding mode.

Where the liquid crystal cell type to be used is a variable birefringence cell, what is required from the cell structure is that it should be capable of 'out-of-plane' tilt, where the plane refers to the plane of the cover glass. Suitable cell structures are the planar-to-homeotropic Freederickz cell, a π cell and a HAN (Hybrid Aligned Nematic) cell. Vertically aligned nematics may also be used. Similar cells employing twist as well as an out-of-plane tilt may be suitable. An example of twist is a twisted nematic cell in which the direction of uniaxial alignment on the front cover glass is orthogonal to that on the rear cover glass, although in both cases the alignment is in a plane parallel to the cover glass.

For the Freederickz cell, when no electric field is applied the index ellipsoid is aligned with the long axis parallel to the cover glass by employing suitable alignment layers. However, when field is applied across the material the director tilts away from the plane of the cover glass and towards the direction of the applied field. With continued reference to Figure 2A, define the two short axes of the index ellipsoid to be in, and perpendicular to, the plane of the cover glass respectively. Let the vector unit $\hat{\underline{y}}$ be parallel to the short axis in the plane of the cover glass, the unit vector $\hat{\underline{z}}$ be perpendicular to the cover glass, and define the unit vector $\hat{\underline{x}}$ so that $\hat{\underline{x}}$, $\hat{\underline{y}}$ and $\hat{\underline{z}}$ form an orthogonal right-handed set. Hence the long axis of the index ellipsoid is always in the x-z plane.

Referring now to Figure 2B, let the initial alignment direction of the long-axis of the index ellipsoid be in the $\hat{x}$ direction. On application of any electric field in the $\hat{z}$ direction (normal to the glass), the long axis rotates in the x-z plane by angle θ. By considering the index ellipsoid, it is clear that for light polarised in the $\hat{y}$ direction, the same effective refractive index, n_0, is experienced, independent of θ. However, light polarised in the $\hat{x}$ direction experiences a modified refractive index, ~~in~~ depending on θ. Changing the strength of the applied field changes θ, and hence changes the refractive index experienced by the light polarised in the $\hat{x}$ direction. In this way the phase of components of light travelling along the $\hat{x}$ direction is modulated in a continuous (analogue) way.

Consider linearly polarised light passing through such a liquid crystal, behind which there is a quarter-wave plate and then a mirror. On the way towards the quarter-wave plate and mirror, the polarisation component polarised in the $\hat{x}$ direction experiences the applied index change (or phase modulation), denoted by n_{APP}, while the component in the $\hat{y}$ direction does not, and instead experiences a refractive index, n_0, that is independent of the applied field. The orientation of the quarter-wave plate is such that these two polarisation components are exchanged. Hence the one component perceives the applied phase modulation on propagation towards the quarter-wave plate and mirror, while the orthogonal component perceives the (same) applied phase modulation after reflection from the mirror and passing back through the quarter-wave plate.

Hence the phase modulation is polarisation-independent, as may be proved by Jones matrix analysis. For a liquid crystal layer thickness of t, both polarisation components will perceive a net phase modulation of $2\pi(n_0 + n_{APP})\, t/\lambda$, where n_{APP} is a continuous function of the applied voltage.

Referring again to Figure 2A, let the planes of the front and back electrodes be parallel to the xy plane and let the director tilt be in the xz plane. In Figure 3, now consider a cross-sectional plane through the liquid crystal 3, again parallel to the xy plane and at a distance Z from the back electrodes 2. The back electrodes 2 are pixellated. To steer a beam incident on an area of the modulator to a desired target direction, a spatially-varying phase modulation characteristic is selected to provide the desired deflection, thus to cause the device to mimic a tilted mirror. Then, the array of back electrodes defining the phase modulating elements of that area are operated so as to cause the phase modulation applied by the overlying liquid crystal to approximate the desired characteristic. This is achieved by applying step voltages to sequential back electrodes, the voltages stepping from a selected minimum up to a level at which the overlying liquid crystal is providing a selected maximum phase shift. The step voltages repeat across the array, so that the voltage characteristic is typically spatially periodic. The number of back electrodes per spatial period is variable according to the desired characteristic. The number will also be dependent on the resolution of the device. The smaller the electrodes, the closer the approximation can be to the desired characteristic.

A second beam incident on a second spatially distinct area of the device is steered to a different direction by selecting a different phase characteristic for that second area. This second area is likely to have a different distribution of voltages. Therefore in front of each particular back electrode the liquid crystal director will have a tilt 4A-4C specific to the applied field. Although this tilt varies with the distance Z from the back electrode, across any pixel and at any fixed Z the tilt is substantially uniform. In practice there may be edge effects such that the tilt in front of the edges of each pixel is modified due to correlations with the tilt in front of the adjacent pixels, as will be described next.

In addition to a dependence on an applied electric field, the director orientation also depends on the orientation of its neighbouring molecules, i.e. the orientations are correlated, due to elastic forces, with a typical correlation length of the order of a micron, which is longer than the dead-space for typical sub-micron CMOS processes.

There is no voltage applied by the dead-space and hence the director orientation above the dead-space may be determined by the orientation of the liquid crystal above the active pixels on either side of the dead-space, as well as by any fringe fields from these adjacent pixels. Additionally, the electric field inside the liquid crystal above the dead-space takes some average of the electric field above the two pixels either side, enhancing the correlation and increasing the correlation length for the director orientation.

Therefore the phase modulation imposed by the dead-space may be considered to be some weighted average of the phase modulation imposed by the adjacent pixels, where the weight is likely to depend on the distance from each adjacent pixel. The simplest model for such behaviour is that the phase modulation varies linearly across the dead-space, as shown by the solid line in Figure 4 for the case of a regular 8 level 1-D phase modulation.

Referring now to Figure 4, a phase modulation characteristic is shown for a periodic eight-pixel distribution. The back electrode of the first pixel is provided with a voltage with respect to the front electrode so as to give rise to a selected minimum phase shift and sequentially adjacent pixels are provided with an increasing voltage differential with respect to the front electrode until the eighth pixel. At the eighth pixel the voltage on the back electrode with respect to the front electrode is such as to provide near a selected maximum phase shift by the liquid crystal layer. So that the entire (here one-dimensional) array can provide the desired characteristic, the ninth pixel is provided with the same voltage conditions as the first pixel and the characteristic then repeats to the sixteenth pixel before again repeating.

The following paragraphs describe the improvements in the insertion loss that would be obtained if the dead-space were altered so as to reflect the light incident upon it. This improvement is due to the correlations in the molecule orientation caused by elastic and electric forces.

If the dead-space can be altered so as to reflect the light incident upon it, such that the reflected light is substantially in-phase with the light reflected from the active pixels, then the phase modulation created by the director correlations can improve the device diffraction efficiency and can recover some or most of the insertion loss penalty due to the dead-space. Also shown in Figure 4 is the ideal phase modulation distribution, as a dashed line. The lines in the figure show that the phase modulation above the dead-space is actually closer to the ideal distribution than it would be in the absence of any dead-space, except at the end of each cycle where there is a 'flyback'. For a regular 1-D m-level phase modulation, with uniform phase modulation above the active area of each pixel, and linear phase variation across the dead-space, as shown in Figure 4 for the example of m=8 and a period of 8 pixels, the diffraction efficiency into the first order can be derived using Fourier series analysis. The results show that apart from the flyback dead-space, the diffraction efficiency is improved by ideal reflecting dead-space, compared to a device without any dead-space, and that this improvement increases with the value of d/p. The flyback, however, reduces the diffraction efficiency. Note that if more phase levels are available then fine adjustments of each level could be used to minimise the impact of the flyback dead-space and maximise the diffraction efficiency. Note also, that if the flyback is outside the active area of illumination, the efficiency penalty due to flyback is removed.

Assuming the light reflected from the dead-space to be perfectly in-phase with the light reflected from the back electrodes, and that the reflectivities of the back electrodes and dead-space are identical, the residual insertion loss penalty due to the dead-space for the first (and strongest) diffraction order has been calculated and is shown in Figure 5 as a function of the pixel pitch, for contours of the number of phase levels, and for a dead-space width of 0.5 μm. The results show that the residual loss penalty decreases with the number of phase levels. This is because for m phase levels then a fraction (m-1)/m of the dead-spaces acts to improve the diffraction efficiency while a fraction 1/m is flyback dead-space which decreases the diffraction efficiency. Figure 5 also shows the insertion loss penalty for normal dead-space and a 1-D SLM. All points on the graph were calculated assuming that the number of phase levels is equal to the number of pixels per period.

The results in the figure show clearly that three significant improvements in device performance may be achieved by making the dead-space reflective. Firstly the loss penalty due to the dead-space is reduced significantly. Secondly, for an acceptable loss penalty, much smaller pixels may be used, allowing the fabrication of much more compact optical crossbar switches, because the length of the beam-steering region is proportional to the square of the pixel pitch. Other routing architectures in which the physical length is linearly proportional to the pixel pitch may also thereby be more compact. Thirdly, the results in the figure are for a dead-space width of 0.5 μm, corresponding to a CMOS feature size of 0.25 μm.

Comparison with the results in Figure 1, bearing in mind the need to halve the values on the graph to convert to 1-D phase modulation, shows that the dead-space loss penalties for this width of reflecting dead-space are reduced to a similar level to those with a much smaller feature size of 70 nm, and hence a much lower available voltage. Therefore the results show that, for an acceptable loss penalty, larger CMOS processes may be used allowing the fabrication of switches with a faster reconfiguration time as explained previously. Therefore a reflecting dead-space facilitates improvements in switch insertion loss, physical size and switching time. The crosstalk is improved as the light incident on the dead-space is reflected back out again instead of bouncing around inside the substrate.

While the above-described improvements in performance are specific to phase-modulating pixels, there are other types of SLM for routing applications e.g. PDLC SLMs, in which the pixels modulate amplitude and/or birefringence and/or phase. Such devices may also be improved by making the dead-space reflective.

The following paragraphs describe an exemplary device n which a layer of circuitry is used to reflect the light passing through the dead-space.

CMOS fabrication processes allow several overlying layers of circuitry, with connections between the layers as necessary. Referring first to Figure 6, an SLM 10 has drive circuitry 30 associated with the VLSI backplane for controlling phase changes in each pixel, and a top layer of circuitry 20 i.e. the circuitry most distant from the

substrate, which may be optical quality metal, forming the back electrodes and back reflectors. Over and between the back electrodes is a liquid crystal layer 24, and over the liquid crystal layer is a transparent common electrode layer 25 deposited on a cover glass 26.

The top layer 20 is deposited on a first optical planarising layer 21 that creates an optically flat surface on top of the drive circuit components for each pixel. Connections are made between the drive circuits and back electrodes. Reflecting dead-space is implemented by introducing an intermediate layer 22 of circuitry inbetween the back electrodes and the drive circuitry 30. The intermediate layer 22 consists of a mesh of metal, which may be of optical quality, such that when viewed normally (at right angles to the plane of the electrodes) there appears to be continuous coverage of the substrate with metal.

The intermediate layer 22 is separated from the back electrodes and drive circuits by a second optical quality planarising layer 23. For optimum effects, the separation from the back electrodes is such that the light reflected from the dead-space is in-phase with that reflected from the back electrodes, taking into account the mean wavelength to be used and the mean angle of incidence. Hence the path length difference between the light reflected from the dead-space mesh and the light reflected from the back electrodes is an integral number of wavelengths, n, inside the optical media at the design wavelength and design angle of incidence.

However, in practice the devices are used for a range of wavelengths. Changing the actual wavelength from the mean design value changes the relative phase between the light reflected from the dead-space mesh and the light reflected from the back electrodes, and hence results in partially destructive interference, thereby increasing the insertion loss penalty due to the dead-space. At a given wavelength difference from the mean design value, this effect gets worse as the integer n increases. Hence this integer, n, should be as small as possible in order to maximise the wavelength range of the device.

In practice the back electrodes 20 have a finite depth of, typically, a few 100's of nanometres. Hence there will be inevitably some additional phase modulation applied by the depth of liquid crystal directly in between and below the top surface of the back electrodes. This could be avoided by depositing a very thin damascene layer on the back electrodes, as shown in Figure 7. This structure also has the advantage of providing a uniform surface for application of the liquid crystal alignment layer, and therefore should ensure good alignment of the liquid crystal above the dead-space.

While Figures 6 and 7 show the generic case of an SLM with reflecting dead-space, for a polarisation independent multiple phase modulating SLM it is advantageous to include a quarter-wave plate 32 intermediate the back electrodes and liquid crystal, as shown in Figure 8. Again, for successful operation of the quarter-wave plate and reflecting dead-space it may be advantageous for there to be also a very thin damascene layer 31 between the back electrodes and quarter-wave plate, as shown in Figure 8.

Again such a structure would improve the quality of the alignment layer, used in this case to align the quarter-wave plate.

In the illustrated embodiment, the intermediate metal layer 22 extends only to fill the space between the back electrodes, in other embodiments the metal may extend further. It will be understood however that if switching of the back electrodes takes place, it may be undesirable or desirable for the metal layer to extend beneath the back electrodes for capacitance effects. In yet another embodiment, the metal layer does not extend over the entire spacing between the back electrodes, but instead extends over part of the spacing.

In a further embodiment the reflecting layer could be formed by adapting the lightshield processes that may be used to protect the semiconductor devices in the substrate from visible light.

In an alternative embodiment, the beam steering device has plural front electrodes per back pixel electrode. Different voltages are applied to these front electrodes to vary the phase shift across the pixel so that there is a ramp across each pixel formed of upward (or downward) steps in accordance with the front electrodes. Hence instead of each pixel electrode representing a single step change in effect on the liquid crystal overlying it, the desired ramp in phase shift is more closely followed. As an example, where three front electrodes are provided per pixel electrode, the voltages applied to the front electrodes may be repeated across each pixel electrode, and be selected so that the centremost front electrode represents the core

voltage for the pixel, with the voltages on the adjacent front electrodes being respectively above and below that applied to the centremost electrode. Where the pixel electrodes rise in voltage from one to the next, there will be one higher voltage front electrode to one side of the inter-pixel space, and one lower voltage front electrode to the other side of the space. Consideration of this state shows that the average state of the liquid crystal device over the space will be such as to smooth the transition between the pixels.

In the described embodiment, the metal layer 22 operates only as a reflective layer. To achieve this it may be left electrically floating if desired, or it may be connected to a desired potential. In another embodiment, the metal layer is connected to a single selected potential to improve electrical operation. In yet another embodiment, the reflective mesh forming the layer 22 is interrupted and portions between back electrodes are mutually isolated and connected to different selected potentials, for instance a potential between the potentials of the two nearest back electrodes. This may affect the edges. This latter embodiment is shown in Figure 10, in which one portion 40 of the mesh is isolated from the other portions, and circuitry 41 connects to a wiring on the substrate, in turn connected to a selected potential.

In yet a further embodiment, there is no intermediate layer, but instead the drive circuitry extends into the spaces between the back electrodes and has a portion which forms the reflective layer.

When used in a routing configuration the angle of incidence should be kept reasonably low. As shown in Figure 9, the effect of off-normal incidence is such that a fraction of the light incident on the dead-space mesh is reflected back into the substrate from the rear side of the back electrodes. With continued reference to Figure 9, for a dead-space mesh positioned a distance q behind the front surface of the back electrodes, and an angle of incidence θ measured inside the planarising layer, the light incident over a fraction $2q \tan \theta / d$ of the dead-space is 'lost' in this manner. The effect on the diffraction efficiency may be calculated using Fourier series analysis, and treating this light leakage as being equivalent to multiplying the phase modulating hologram by another pixel 'window' function with an amplitude of zero over a fraction $2q \tan \theta / d$ of the dead-space and an amplitude of unity elsewhere. Hence for 1-D phase modulation and at a design wavelength the effect of the angle of incidence is (to first order) to multiply the diffraction efficiency by a factor given in eqn (3):

actual 1-D efficiency = $(1-2.q.\tan \theta / p)2$. efficiency in normal incidence (3)

Therefore increasing the angle of incidence reduces the diffraction efficiency. The diffraction efficiency also decreases with the depth, q, of the planarising layer between the dead-space mesh and the back electrodes. Hence it is again advantageous to keep as low as possible the integer number of wavelengths in the path difference between the light reflected from the dead-space and that reflected from the back electrodes.

Reflecting dead-space SLMs may also be used with binary phase devices based on in-plane tilt, although the physics of the phase modulation above the dead-space is different.

In an alternative solution, the back electrodes may be pixellated, but adjacent electrodes may be disposed in different planes to substantially eliminate dead-space.

Although the embodiments are described as having a front electrode that is common to the pixel area, the invention is also applicable to other situations. In one alternative, there is provided a single front electrode per pixel.

An embodiment of the present invention has been described with particular reference to the examples illustrated. However, it will be appreciated that variations and modifications may be made to the examples described within the scope of the present invention.

CLAIMS

1. A device for steering a beam of light, the device comprising an array of elements, said beam of light being incident upon said array of elements, each element having a reflective back electrode and a front electrode, the back and front electrodes being disposed respectively behind and in front of a liquid crystal layer, the back electrodes being spaced apart to define said array, and a reflective layer disposed behind the back electrodes to reflect light incident in the spaces between the back electrodes substantially in phase with the light reflected from the back electrodes.

2. The device of Claim 1 wherein there is provided a single front electrode per element.

3. The device of Claim 2 wherein the front electrode is common to the array of elements.

4. The device of Claim 1, 2 or 3 having drive circuitry on a substrate, and a planarising layer disposed on said drive circuitry, wherein said back electrodes are disposed on said planarising layer, and respective wirings pass through said planarising layer from said back electrodes to said drive circuitry, and wherein a portion of said drive circuitry provides said reflective layer.

5. The device of Claim 1, 2 or 3 having drive circuitry on a substrate, and a planarising layer disposed on said drive circuitry, wherein said back electrodes are disposed on said planarising layer, and respective wirings pass through said planarising layer from said back electrodes to

said drive circuitry, and wherein said reflective layer is disposed within said planarising layer.

6. The device of Claim 1, 2 or 3 having drive circuitry on a substrate, a first planarising layer disposed on said drive circuitry wherein said reflective layer is disposed on said first planarising layer, and a second planarising layer disposed on said circuitry layer and said first planarising layer wherein said back electrodes are disposed on said second planarising layer, wherein respective wirings pass through said planarising layers from said back electrodes to said drive circuitry.

7. The device of any preceding claim having a further planarising layer disposed over said back electrodes.

8. The device of any preceding claim having a wave plate disposed over said back electrodes.

9. The device of any preceding claim wherein said reflective layer is composed of metal.

10. The device of any preceding claim wherein said reflective layer extends only to substantially fill said spaces between said back electrodes.

11. The device of any of Claims 1 - 8 wherein said reflective layer extends beneath said back electrodes.

12. The device of any of Claims 1 - 8 wherein said reflective layer extends substantially level with said back electrodes.

13. The device of any of Claims 1 - 9 wherein said reflective layer extends only partway across said spaces.

14. The device of any preceding claim further comprising circuitry for connecting at least a portion of said reflective layer to a selected potential.

15. The device of any preceding claim, wherein each element has plural front electrodes.

16. A method of steering light having a first direction to a desired second direction, the method comprising:

causing a beam of said light to be incident upon a reflective liquid crystal device;

selecting a desired spatial phase modulation characteristic for said liquid crystal device thereby to provide a deflection from said first direction to said second direction; and

providing a spatial distribution of phase levels across said liquid crystal device to at least approximate to said desired characteristic;

wherein the step of providing a spatial distribution of phase levels comprises driving said liquid crystal at sequential spaced driving locations to produce rising discrete phase levels; and

smoothing transitions in phase between said spaced driving locations by providing further locations between said spaced driving locations, and reflecting said light through said liquid crystal in said further locations.

17. A method according to Claim 16, wherein said step of driving said liquid crystal comprises providing electrodes at said discrete driving locations, and applying voltages to sequential electrodes to cause said rising phase levels due to the liquid crystal.

18. A method according to Claim 17, wherein said step of smoothing comprises providing spaces between the electrodes at said further locations and providing reflective elements in the spaces and behind the electrodes.

19. A method according to Claim 16 wherein said electrodes are reflective whereby said liquid crystal device is reflective.

20. A method according to Claim 17, comprising providing a reflective layer disposed behind the electrodes whereby said liquid crystal device is reflective.

21. A method according to Claim 19, wherein the step of providing reflective elements comprises disposing the reflective elements at a distance behind said electrodes such that light reflected thereby leaves said liquid crystal device substantially in phase with light reflected by said electrodes.

22. An optical routing switch comprising at least one beam steering device according to any of Claims 1 - 15.

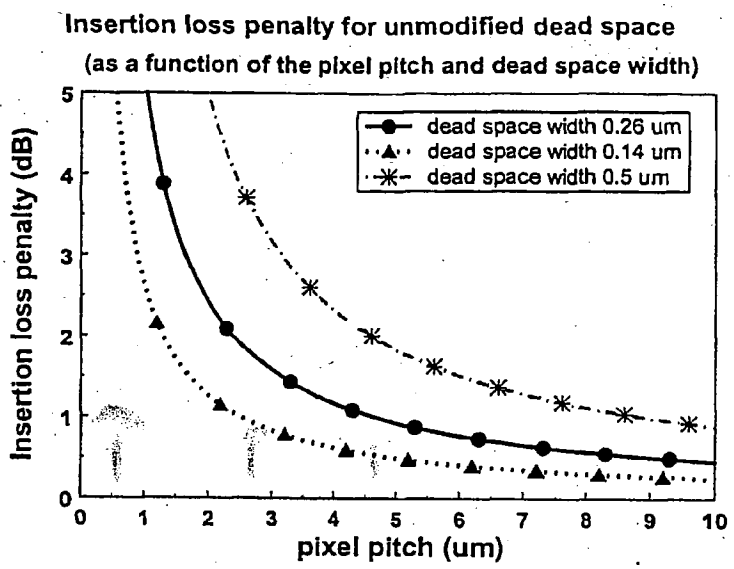

Figure 1

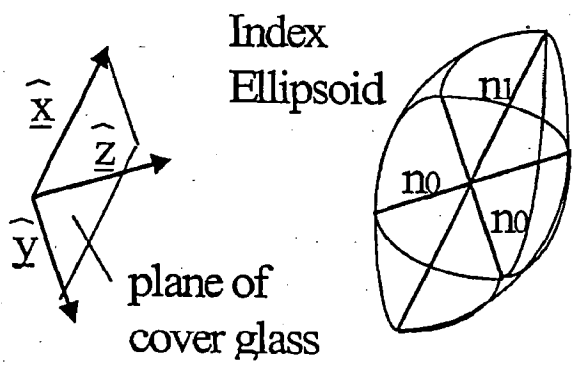

Figure 2A

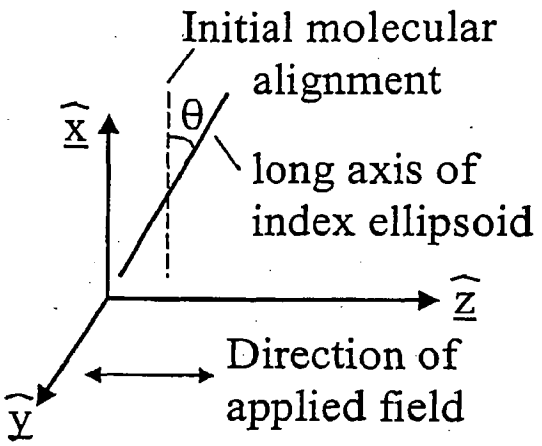

Figure 2B

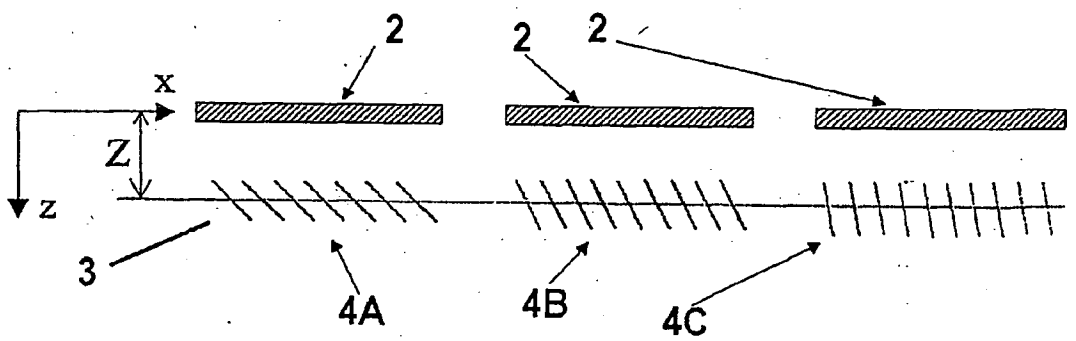

Figure 3

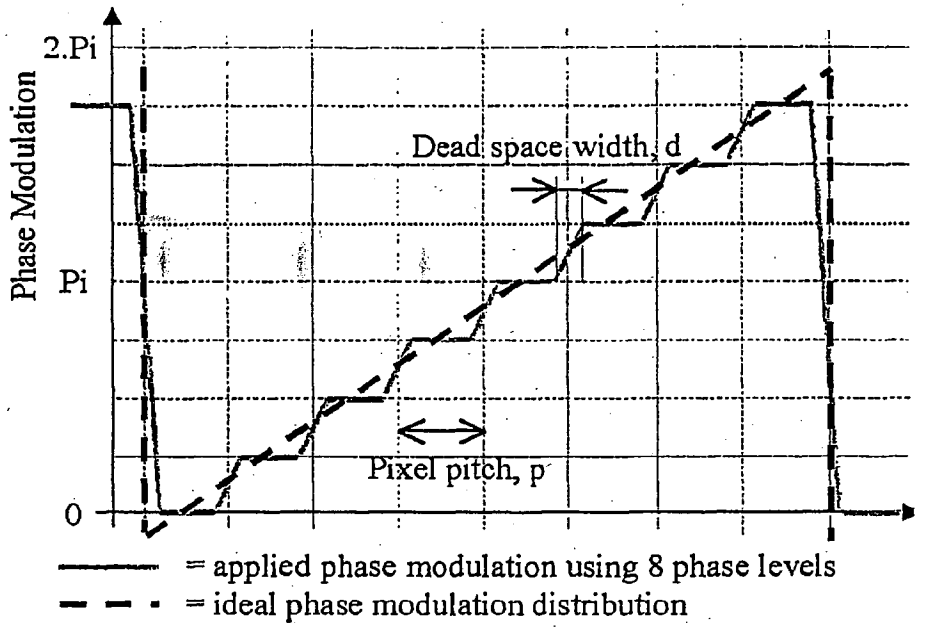

Figure 4

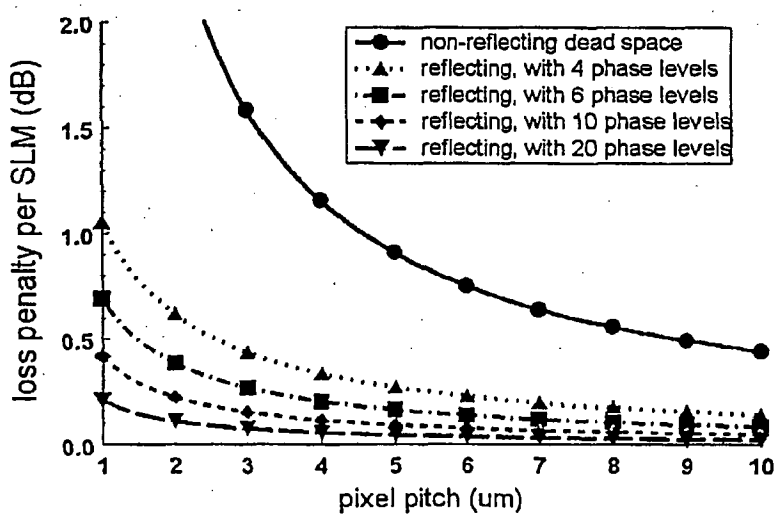

Figure 5

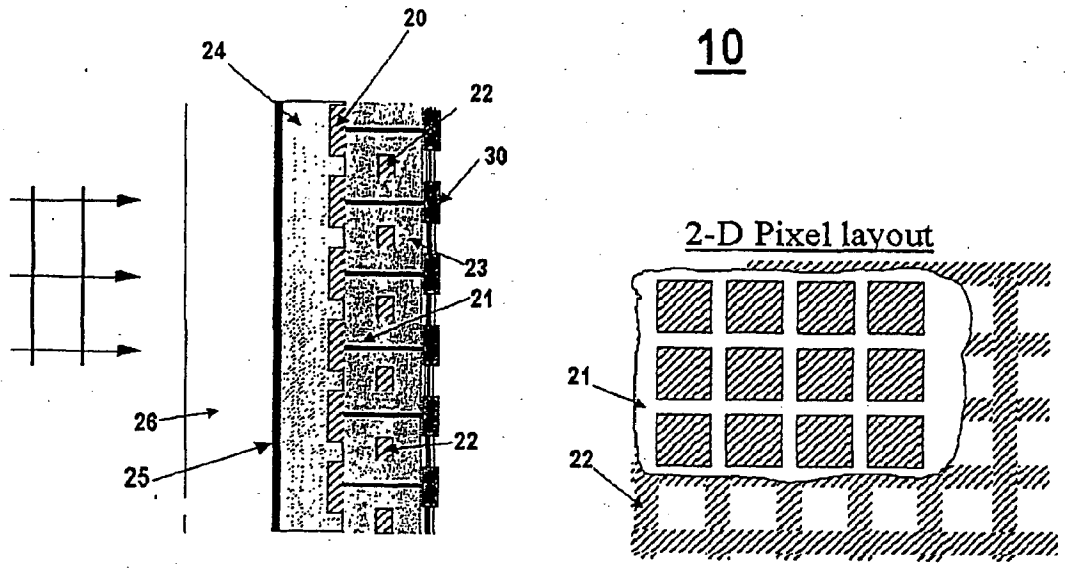

Figure 6

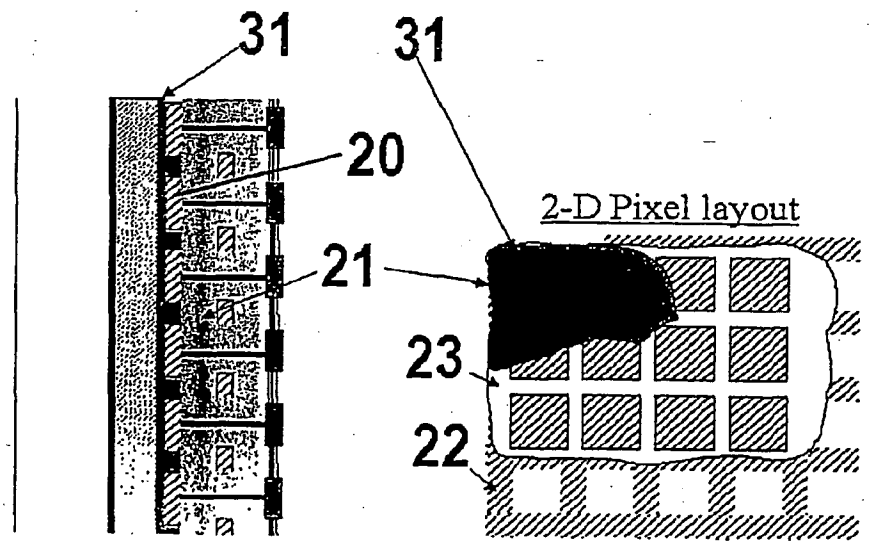

Figure 7

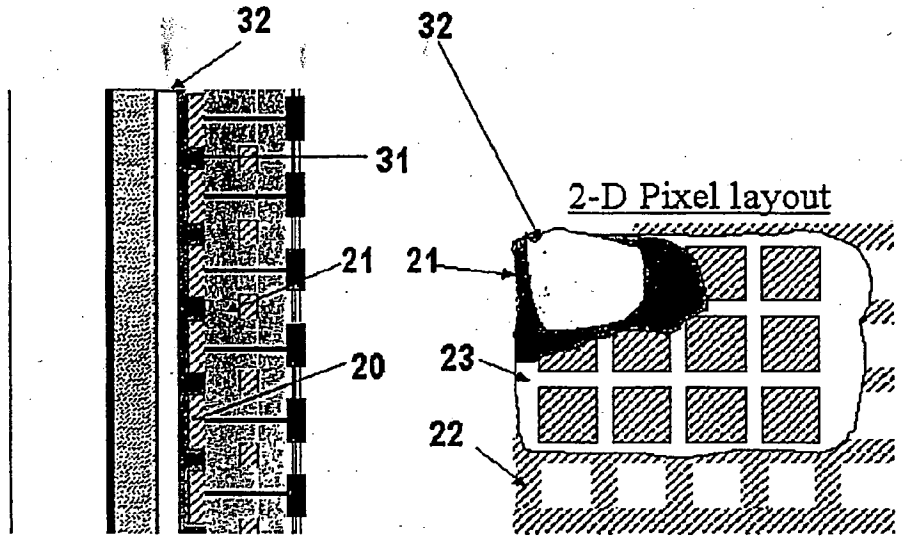

Figure 8

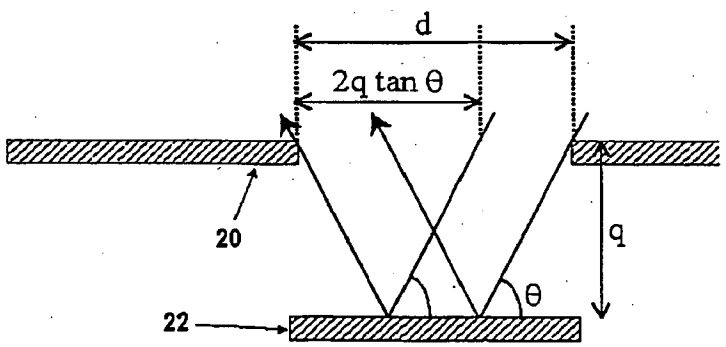

Figure 9

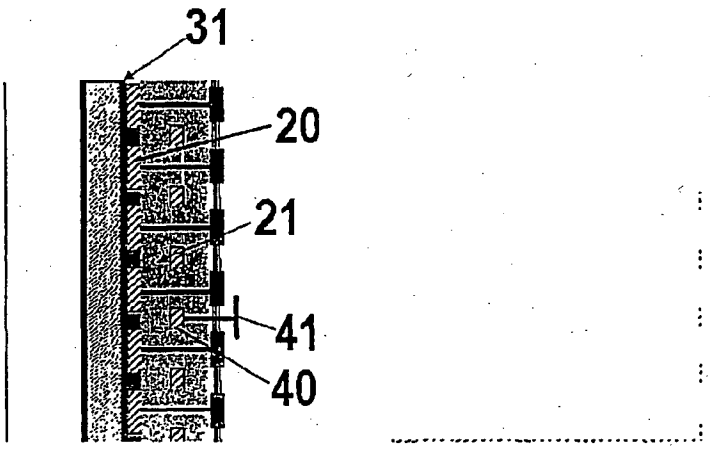

Figure 10

Tunable semiconductor laser with liquid crystal pixel mirror in grating-loaded external cavity

Ci-Ling Pan, Shang-Huang Tsai, Ru-Pin Pan, Chia-Reng Sheu and S.C. Wang

The wavelength of a commercial red pointer laser diode has been tuned over 4nm digitally in 0.2nm steps with a folded telescopic grating loaded external cavity incorporating a liquid crystal pixel mirror. The sidemode-suppression ratio of the laser was better than 20dB throughout this range.

Owing to their applications in areas such as optical communication, high-resolution spectroscopy and optical metrology, tunable semiconductor and fibre lasers have been extensively studied in the past decade. Typical wavelength tuning methods for these lasers include bulk and fibre-type Littrow and grazing-incidence gratings, Fabry-Perot etalon or interference filters, as well as electro-optic or acousto-optic tunable filters [1]. In particular, liquid crystal devices have been employed successfully as electronically tunable spectral filters for wavelength selection in these lasers and related WDM systems [2 – 6]. These devices are either designed as birefringent filters [2, 4] or Fabry-Perot interferometers [3, 6]. Parker and Mears [5], on the other hand, employed holographic gratings electro-optically written on a ferroelectric liquid crystal spatial light modulator together with a fixed phase grating to tune the wavelength of a fibre laser to discrete wavelengths spaced by 1.3 nm. In this Letter, we report a new type of tunable semiconductor laser by using a folded telescopic grazing-incidence grating-loaded external cavity [7, 8] incorporating a liquid crystal pixel mirror.

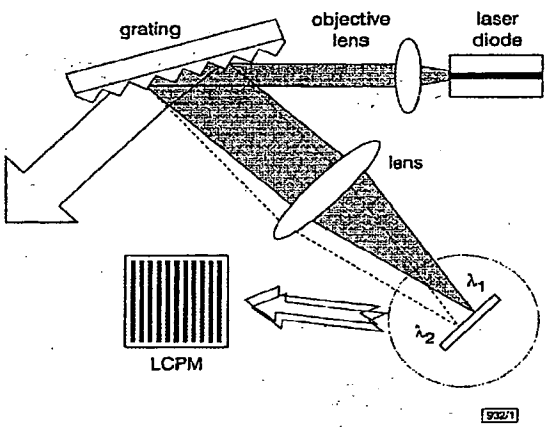

Fig. 1 *Schematic diagram of electronically tunable semiconductor laser with liquid crystal pixel mirror in folded telescopic grating-loaded external cavity*

A schematic diagram of the laser is shown in Fig. 1. A low-power red laser diode (LD, $\lambda \simeq 640$nm, 1.5mW) from a commercial laser pointer was used without modification as the gain medium. The output of the LD was collimated and incident on the grating (2400line/mm) at an angle of 67°. The primary laser output is the zeroth-order reflection of the grating (~ 60% of the incident light from the diode chip). Spectrally selective optical feedback was provided by the retro-reflected first-order-diffracted light from the grating, which was collected by a lens (f = 15cm) and focused on the liquid crystal pixel mirror (LCPM). It is based on the design of a normally off-state twisted nematic liquid crystal (NLC) cell. The cell was constructed with a 6μm-thick NLC (E7 manufactured by Merck) layer sandwiched between indium-tin-oxide (ITO) glass plates. One of the ITO electrodes was patterned. The pattern consisted of 50 100μm × 2cm stripes with 5μm spacing. The polariser was aligned to transmit light parallel to that of the incident laser polarisation. The back mirror was an Au-coated silicon substrate. Narrowband laser oscillation at the desired wavelength is realised by electronically selected optical feedback of the retro-reflected light from one pixel of the LCPM to the laser diode. The width of the pixel was chosen such that only one mode of the bare diode chip was selected. The laser is electronically tunable by biasing the individual pixels, with wavelength steps $\Delta\lambda$ determined by the centre-to-centre separation of the adjacent pixels Δx:

$$\Delta\lambda = \Lambda \cos\theta_r \Delta x / f \qquad (1)$$

where Λ is the grating period, θ_r is the first-order diffraction angle, and f is the focal length of the lens.

Mainly limited by the extinction ratio of the polariod, the on/off state contrast ratio of the pixels of the homemade LCPM is only ~5:1. Nevertheless, this is sufficient for achieving the desired spectral filtering function. The threshold switching voltage of the LCPM is $4V_{pp}$ (peak-to-peak) at 10kHz. Complete switching from the off- to on-state is achieved at $10V_{pp}$. The switch-on time, i.e. the time it takes for a pixel to change from an off state to an on state, is ~175ms. This is determined by the characteristics of the twisted NLC cell.

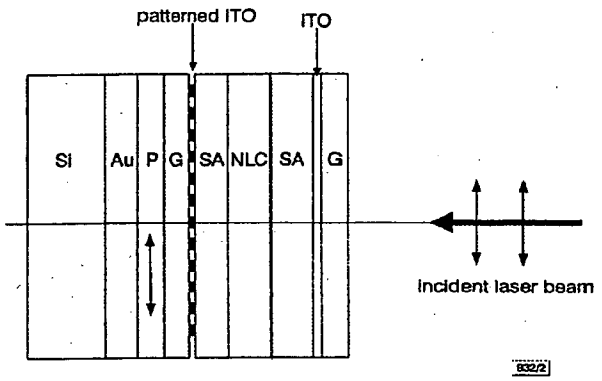

Fig. 2 *Configuration of LCPM*

G: glass plate; ITO: indium-tin-oxide coating; NLC: nematic liquid crystal; SA: surface alignment layer; P: polariser; Au: evaporated gold coating; Si: silicon substrate

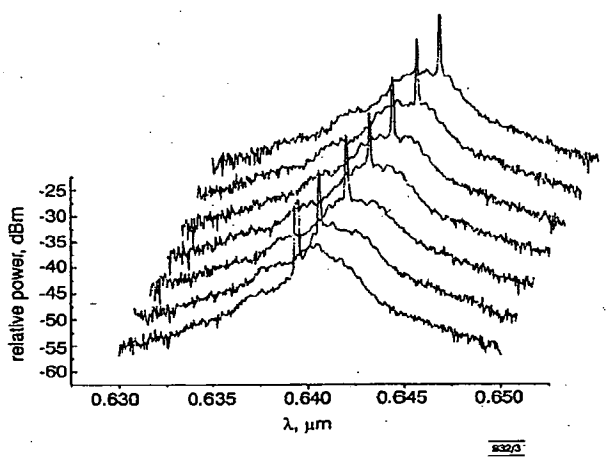

Fig. 3 *Narrow-linewidth output spectra of tunable laser as successive pixels were biased*

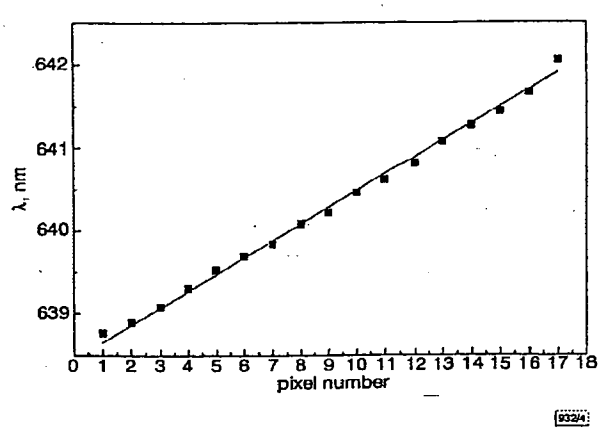

Fig. 4 *Lasing wavelength against pixel number*

——— theoretical curve according to eqn. 1
■ experimental data

AT

TS0000403

The laser wavelength can be tuned from 636 to 643nm discretely in 0.20nm steps by biasing sequentially the pixels (see Fig. 3). The sidemode suppression ratio (SMSR) of the laser was better than 20dB throughout this range. In Fig. 4, we plot the lasing wavelength against the pixel number. It is in good agreement with the theoretical prediction according to eqn. 1. The wavelength re-setability of the present laser is excellent. After switching to a different pixel, the laser wavelength is reset. Realignment of the laser cavity is not necessary. The tuning range of the laser is limited by the reflectivity of the front facet of the LD. With antireflection coating such that $R < 1\%$ for this facet, the tuning range of the laser can easily exceed several tens of nanometres [7, 8]. The SMSR of the laser output can be improved if we employ LCPMs with higher contrast ratios.

In summary, we have realised a novel tunable semiconductor laser by using a folded telescopic grating-loaded external cavity with a liquid crystal pixel mirror (LCPM) at the focal plane of the folded telescope. We achieved narrow-band (< 0.1nm, instrument-limited) electrically-tunable output from 636 to 643nm in 0.27nm steps with a low-power red LD in a commercial laser pointer. The SMSR of the laser output was better than 20 dB throughout this range. The tuning range and SMSR are limited by the reflectivity of the front facet of the LD and contrast ratio of the LCPM. The wavelength switching time was ~175ms. The use of different liquid crystal materials and surface alignment techniques can speed this up.

Acknowledgments: This work was partially supported by the National Science Council of the ROC under various grants.

© IEE 1999
29 June 1999
Electronics Letters Online No: 19990960
DOI: 10.1049/el:19990960

Ci-Ling Pan, Shang-Huang Tsai, Ru-Pin Pan, Chia-Reng Sheu and S.C. Wang (*National Chiao Tung University, 1001 Ta Hsueh Road, Hsinchu, Taiwan 30010, Republic of China*)

E-mail: clpan@cc.nctu.edu.tw

References

1 ZORABEDIAN, P.: 'Tunable external-cavity semiconductor lasers' in DUARTE, F. J. (Ed.): 'Tunable lasers handbook' (Academic Press, San Diego, 1995), pp. 349–442
2 ANDREWS, J.R.: 'Low voltage wavelength tuning of an external cavity diode laser using a nematic liquid crystal-containing birefringent filter', *IEEE Photonics Technol. Lett.*, 1990, **2**, (5), pp. 334–336
3 MAEDA, M.W., PATEL, J.S., SMITH, D.A., LIN, C., SAIFI, M.A., and VON LEHMAN, A.: 'An electronically tunable fiber laser with a liquid-crystal etalon filter as the wavelength-tuning element', *IEEE Photonics Technol. Lett.*, 1990, 2, (11), pp. 787–789
4 MOLLIER, P., ARMBRUSTER, V., PORTE, H., and GOEDGEBUER, J.P.: 'Electrically tunable Nd^{3+}-doped fibre laser using nematic liquid crystals', *Electron. Lett.*, 1995, **31**, (15), pp. 1248–1250
5 PARKER, M.C., and MEARS, R.J.: 'Digitally tunable wavelength filter and laser', *IEEE Photonics Technol. Lett.*, 1996, **8**, (8), pp. 1007–1008
6 MATSUMOTO, S., HIRABAYASHI, M., SAKATA, S., and HAYASHI, T.: 'Tunable wavelength filter using nano-sized droplets of liquid crystal', *IEEE Photonics Technol. Lett.*, 1999, **11**, (4), pp. 442–444
7 WANG, C.-L., and PAN, C.-L.: 'Tunable dual-wavelength operation of a diode array with an external grating-loaded cavity', *Appl. Phys. Lett.*, 1994, **64**, (23), pp. 3089–3091
8 WANG, C.-L., and PAN, C.-L.: 'Tunable picosecond pulse generation from an actively mode-locked laser diode array with intracavity chirp compensation', *Jpn. J. Appl. Phys.*, 1994, **33**, (2), pp. L1456–L1458

TS0000404

(12) INTERNATIONAL APPLICATION PUBLISHED UNDER THE PATENT COOPERATION TREATY (PCT)

(19) World Intellectual Property Organization
International Bureau

(43) International Publication Date
12 April 2001 (12.04.2001)

PCT

(10) International Publication Number
WO 01/25848 A2

(51) International Patent Classification[7]: G02F 1/31

(21) International Application Number: PCT/GB00/03810

(22) International Filing Date: 4 October 2000 (04.10.2000)

(25) Filing Language: English

(26) Publication Language: English

(30) Priority Data:
9923428.8 4 October 1999 (04.10.1999) GB

(71) Applicant *(for all designated States except US)*: **THOMAS SWAN & CO., LTD.** [GB/GB]; Crookhall, Consett, Durham DH8 7ND (GB).

(72) Inventors; and

(75) Inventors/Applicants *(for US only)*: **WARR, Steven** [GB/GB]; 11 Monkley Court, Piggotts Road, Caversham, Reading RG4 8EW (GB). **TAN, Kim, Leong** [MY/US]; Apartment #6, 1178 Curtiss Avenue, San Jose CA 95125 (US). **CROSSLAND, William** [GB/GB]; Odd Spot, 15 School Lane, Harlow, Essex CM20 8QD (GB). **MANOLIS, Ilias** [GR/GR]; Nea Figalia, GR-270 56 Olympias Hleias (GR). **REDMOND, Maura** [GB/GB]; 24 Thornton Road, Girton, Cambridge CB3 0NW (GB). **WILKINSON, Timothy** [NZ/GB]; Jesus College, Cambridge CB5 8BL (GB). **HOLMES, Melanie** [GB/GB]; The Forge, The Street, Brundish, Woodbridge, Suffolk IP13 8BL (GB). **ROBERTSON, Brian** [GB/GB]; c/o Raymond Robertson, 75 Poplar Avenue, Hove, East Sussex BN3 8PT (GB).

(74) Agents: **NEOBARD, William, John** et al.; Page White & Farrer, 54 Doughty Street, London WC1N 2LS (GB).

(81) Designated States *(national)*: AE, AG, AL, AM, AT, AU, AZ, BA, BB, BG, BR, BY, BZ, CA, CH, CN, CR, CU, CZ, DE, DK, DM, DZ, EE, ES, FI, GB, GD, GE, GH, GM, HR, HU, ID, IL, IN, IS, JP, KE, KG, KP, KR, KZ, LC, LK, LR, LS, LT, LU, LV, MA, MD, MG, MK, MN, MW, MX, MZ, NO, NZ, PL, PT, RO, RU, SD, SE, SG, SI, SK, SL, TJ, TM, TR, TT, TZ, UA, UG, US, UZ, VN, YU, ZA, ZW.

(84) Designated States *(regional)*: ARIPO patent (GH, GM, KE, LS, MW, MZ, SD, SL, SZ, TZ, UG, ZW), Eurasian patent (AM, AZ, BY, KG, KZ, MD, RU, TJ, TM), European patent (AT, BE, CH, CY, DE, DK, ES, FI, FR, GB, GR, IE, IT, LU, MC, NL, PT, SE), OAPI patent (BF, BJ, CF, CG, CI, CM, GA, GN, GW, ML, MR, NE, SN, TD, TG).

Published:
— *Without international search report and to be republished upon receipt of that report.*

For two-letter codes and other abbreviations, refer to the "Guidance Notes on Codes and Abbreviations" appearing at the beginning of each regular issue of the PCT Gazette.

(54) Title: OPTICAL SWITCHING WITH FERROELECTRIC LIQUID CRYSTAL SLMS

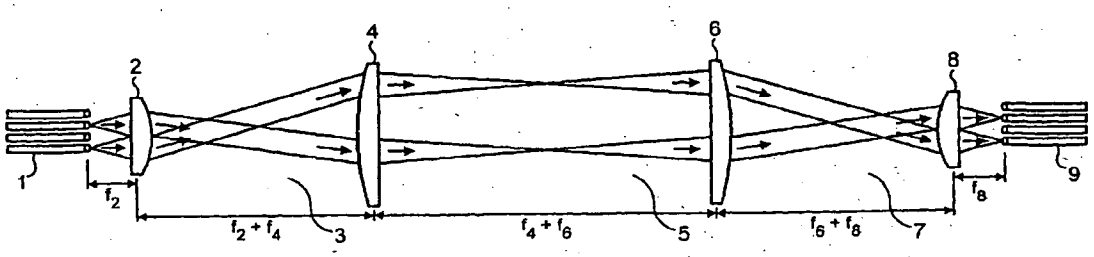

(57) Abstract: An optical switch uses two ferroelectric liquid crystal spatial light modulators with an interconnect region in between. The switch uses bulk lenses to focus light from an input fibre array to a first spatial light modulator, and from the second spatial light modulator to an output array. Each spatial light modulator displays a respective hologram selected from a previously calculated set, to cause a desired switching of light from the input fibre array to the output array.

WO 01/25848 A2

AM

Optical Switching with Ferroelectric liquid crystal SLMs

Field of the invention

The present invention relates to generally to the field of optical switching, and more particularly to switching capable of selective connection between an array of input elements and an array of output elements using ferroelectric liquid crystal spatial light modulators.

Background of the invention

The development of optical fibre switching components is vital to the continued growth of global information systems. Single-stage matrix switches operating independently of the optical bit-rate and modulation formats, capable of reconfigurably interconnecting N optical inputs to M optical outputs (where N and M are generally, but not necessarily the same number), are particularly desirable.

Some prior art switches are limited in functional size to less than 64x64. Others suffer from relatively poor noise performance.

One useful known configuration is described later herein with respect to Figure 15. This switch, which uses static holograms provides a static optical switch in which the input signals are "hard-wired" to specific outputs. Adapting the device of Figure 15 to use reconfigurable holograms as elements for deflecting optical beams in free-space between arrays of optical inputs and optical outputs provides a reconfigurable switch by means of

TS0000406

displaying hologram patterns on a spatial light modulator.

There are, however, some practical design problems associated with the migration from a static optical shuffle to a reconfigurable switch.

One problem which has failed to be successfully addressed is that of crosstalk, and another at least partly allied problem is that of insertion losses. Crosstalk occurs when light that was intended to follow one path instead has a component that follows another path. The insertion loss issues are linked to imperfections in the hologram displaying device and to the use of microlenses, which are difficult and expensive to produce, as well as being of questionable accuracy and poor reproducibility. Both of these defects lead to crosstalk. The hologram displaying devices used in reconfigurable hologram switches have been found to be less than perfect, in that they allow beams of direct light to pass through when a deviation was required instead. Clearly the direct component (referred to herein also as "zero order" light) gives rise to crosstalk.

A third problem is making the switch polarisation insensitive, since the polarisation of the light passing through an optical network, and especially through optical fibres fluctuates, for example with time. It has been established that ferroelectric liquid crystal SLMs can be made to operate in a polarisation insensitive manner.

TS0000407

These effects can be addressed by selection of the holograms. However state of the art techniques for production of holograms are not adequate for the required performance.

It is a primary object of the present invention to provide an optical switch using reconfigurable hologram devices which at least partly overcomes the problems of the state of the art.

Summary of the invention

According to a first aspect of the present invention there is provided an optical switch comprising an input optical fibre array and a receiver array, and an optical system connecting the input optical fibre array to the receiver array wherein the optical system comprises a first bulk lens for receiving light from the input optical fibre array, a first ferroelectric liquid crystal spatial light modulator, a second ferroelectric liquid crystal spatial light modulator, each spatial light modulator being adapted for providing a respective selectable set of holograms, an interconnect region between said first and second ferroelectric liquid crystal spatial light modulators, and a second bulk lens providing output light to the output array.

In one embodiment, the optical switch further comprises a pair of lenses disposed respectively between said first bulk lens and the first spatial light modulator, and between the second spatial light modulator and the second bulk lens.

TS0000408

In another embodiment, the optical switch further comprises a pair of lenses disposed between said spatial light modulators to define there between said interconnect region.

In a first class of embodiments, said spatial light modulators are transmissive.

In one embodiment of said first class, the first bulk lens is disposed to provide a plurality of collimated light beams from said input optical fibre array, said pair of lenses comprises a second lens and a third lens, said second lens for receiving said collimated light beams and providing a corresponding plurality of mutually parallel beams and said third lens being disposed for receiving said mutually parallel beams and collimating said beams, and said second bulk lens is a fourth lens being disposed for focussing said beams onto said receiver array.

In a second embodiment of said first class, the first bulk lens is disposed to provide a plurality of collimated light beams from said input optical fibre array, said pair of lenses comprises a second lens and a fourth lens, the said second lens for receiving said collimated light beams and providing a corresponding plurality of mutually convergent beams, the optical system further comprising a third lens having a negative power, receiving said convergent beams and providing mutually divergent output beams, and the fourth lens being disposed for receiving said mutually divergent beams and collimating said beams wherein said second bulk

lens is a fifth lens being disposed for focussing said beams onto said receiver array.

This second embodiment has the advantage of allowing path length reduction by comparison with the above-discussed first embodiment.

In a third embodiment of said first class, the first bulk lens is disposed to provide a plurality of collimated light beams from said input optical fibre array, said pair of lenses comprises a second lens and a fourth lens, the said second lens for receiving said collimated light beams and providing a corresponding plurality of mutually convergent beams, the optical system further comprising a third lens having a positive power, receiving said convergent beams and providing mutually divergent output beams as a unity conjugate lens, and the fourth lens being disposed for receiving said mutually divergent beams and collimating said beams wherein said second bulk lens is a fifth lens being disposed for focussing said beams onto said receiver array.

This third embodiment allows path also has the advantage of allowing path length reduction by comparison with the above-discussed first embodiment, but to a lesser degree than the second embodiment. However the use of the relay lens may enable easier control of optical aberrations.

In an advantageous modification, the optical system has an optical axis and the input and receiver arrays are mutually offset to opposite sides of the system optical axis, other components remaining on-axis.

This configuration can allow undeflected signals, termed herein zero-order signals , to pass through without causing cross talk

In a preferred modification of the above second and third embodiments, the optical system has an optical axis and the input and receiver arrays, the first, second, fourth and fifth lenses are disposed on the system optical axis and the third lens is laterally offset there from.

This also allows undeflected signals to pass straight through without causing cross talk, and enables a relatively improved optical aberration performance.

In a second class of embodiments, the spatial light modulators are reflective.

In a first embodiment of the second class, the optical system has a zigzag axis, and each of said pair of lenses is disposed with respect to an associated spatial light modulator such that light travelling along said axis passes twice through each of said lenses.

In a preferred embodiment of the second class, each of said first and second bulk lenses has an associated further lens disposed to form an optical magnification stage.

In a first modification, a relay lens is disposed in the interconnect region.

IN a second modification, a field lens is disposed in the interconnect region.

To provide immunity from cross talk, the relay or respectively field lens may be disposed off-axis.

In a preferred embodiment of the first aspect of the invention, said input optical fibre array and said receiver array have respective input and output ports each comprising a respective 32X32 array of ports, and said ports are disposed at normalised coordinate locations defined by:

Input Port Locations (η_i , ξ_i)	Output Port Locations (η_o , ξ_o)
$(-1/60 , -1/12)$	$(+1/60 , -1/12)$
$(-1/30 , -1/12)$	$(+1/30 , -1/12)$
$(-1/20 , -1/12)$	$(+1/20 , -1/12)$
$(-1/60 , -1/15)$	$(+1/60 , -1/15)$
$(-1/30 , -1/15)$	$(+1/30 , -1/15)$
$(-1/20 , -1/15)$	$(+1/20 , -1/15)$
$(-1/60 , -1/20)$	$(+1/60 , -1/20)$
$(-1/30 , -1/20)$	$(+1/30 , -1/20)$
$(-1/20 , -1/20)$	$(+1/20 , -1/20)$
$(-1/60 , -1/30)$	$(+1/60 , -1/30)$
$(-1/30 , -1/30)$	$(+1/30 , -1/30)$
$(-1/20 , -1/30)$	$(+1/20 , -1/30)$
$(-1/60 , -1/60)$	$(+1/60 , -1/60)$
$(-1/30 , -1/60)$	$(+1/30 , -1/60)$
$(-1/20 , -1/60)$	$(+1/20 , -1/60)$
$(-1/60 , 0)$	$(+1/60 , 0)$
$(-1/30 , 0)$	$(+1/30 , 0)$
$(-1/20 , 0)$	$(+1/20 , 0)$
$(-1/60 , +1/60)$	$(+1/60 , +1/60)$
$(-1/30 , +1/60)$	$(+1/30 , +1/60)$
$(-1/20 , +1/60)$	$(+1/20 , +1/60)$
$(-1/60 , +1/30)$	$(+1/60 , +1/30)$
$(-1/30 , +1/30)$	$(+1/30 , +1/30)$

$(-1/20 , +1/30)$	$(+1/20 , +1/30)$
$(-1/60 , +1/20)$	$(+1/60 , +1/20)$
$(-1/30 , +1/20)$	$(+1/30 , +1/20)$
$(-1/20 , +1/20)$	$(+1/20 , +1/20)$
$(-1/60 , +1/15)$	$(+1/60 , +1/15)$
$(-1/30 , +1/15)$	$(+1/30 , +1/15)$
$(-1/20 , +1/15)$	$(+1/20 , +1/15)$
$(-1/60 , +1/12)$	$(+1/60 , +1/12)$
$(-1/30 , +1/12)$	$(+1/30 , +1/12)$

In a second aspect of the invention, there is provided an optical switch comprising an input optical fibre array and a receiver array, and an optical system connecting the input optical fibre array to the receiver array wherein the optical system comprises a first binary reconfigurable spatial light modulator, a second binary reconfigurable spatial light modulator, each spatial light modulator being adapted for providing a respective selectable set of holograms each for a desired switching operation, and a pair of lenses between said first and second binary reconfigurable spatial light modulators for defining therebetween an interconnect region, wherein each spatial light modulator comprises a display screen, memory circuitry for a plurality of sets of hologram data and selection circuitry for selecting one of said sets according to a desired switching function, each stored set of hologram data being calculated by:

determining principal replay coordinates of a said hologram according to a desired switching function;

using said coordinates:

calculate the size in pixels of a base cell; and

evaluating a base cell pattern by a phase quantisation procedure;

and

replicating said base cell pattern data until the entire aperture of the spatial light modulator is filled.

In a third aspect of the invention there is provided an optical switch comprising an input optical fibre array and a receiver array, and an optical system connecting the input optical fibre array to the receiver array wherein the optical system comprises a first ferroelectric liquid crystal spatial light modulator, a second ferroelectric liquid crystal spatial light modulator, each spatial light modulator being adapted for providing a respective selectable set of holograms each for a desired switching operation, and a pair of lenses between said first and second ferroelectric liquid crystal spatial light modulators for defining therebetween an interconnect region, wherein each spatial light modulator comprises a display screen, memory circuitry for a plurality of sets of hologram data and selection circuitry for selecting one of said sets according to a desired switching function, each stored set of hologram data being calculated by:

determining principal replay coordinates of a said hologram according to a desired switching function;

using said coordinates:

calculate the size in pixels of a base cell; and

evaluating a base cell pattern by a phase quantisation procedure;

and

replicating said base cell pattern data until the entire aperture of the spatial light modulator is filled.

Advantageously said step of determining principal replay coordinates of a desired hologram comprises

determining the normalised angular deviation upon a collimated paraxial beam required of a desired hologram; deriving from said deviation the principal replay mode coordinates for said desired hologram.

Preferably said step of calculating comprises converting said coordinates to rational numbers each comprising a numerator and a denominator, wherein said rational numbers are simplified so that said denominators have their lowest integer values, and using said denominators as the number of pixels for said base cell pattern.

According to a fourth aspect of the invention there is provided a method of producing a phase-only computer generated hologram for a pixellated hologram device, having a respective (x,y) plane and a predetermined number of uniformly distributed phase levels, the method comprising:
determining principal replay coordinates of a desired hologram;
using said coordinates:
calculating the size in pixels of a base cell; and
evaluating a base cell pattern by a phase quantisation procedure;
and
replicating said base cell in the plane of the said hologram device until the entire aperture of the device is filled.

Advantageously said step of determining principal replay coordinates of a desired hologram comprises determining the normalised angular deviation upon a collimated paraxial beam required of a desired hologram;

deriving from said deviation the principal replay mode coordinates for said desired hologram;

Preferably said step of evaluating comprises:
converting said coordinates to rational numbers each comprising a numerator and a denominator, wherein said rational numbers are simplified so that said denominators have their lowest integer values, and using said denominators as the number of pixels for said base cell pattern.

Advantageously the method further comprises constraining said numerator and denominator by a predetermined mathematical relationship.

Conveniently said mathematical relationship is specified by

$$-\tfrac{1}{2}D_x \le N_x \le \tfrac{1}{2}D_x \quad -\tfrac{1}{2}D_x \le N_y \le \tfrac{1}{2}D_y \quad 1 \le D_x \le R_x \quad 1 \le D_y \le R_y$$

where N_x, N_y are said numerators and D_x, D_y are said denominators.

Preferably said evaluating step comprises defining a spatially sampled phase screen using said rational fractions such that

$$\phi(k,l) = k\frac{N_x}{D_x} + l\frac{N_y}{D_y}$$

wherein ϕ is the phase screen, k =0,1,2 ...(D_x-1) and 1= 0,1,2 ...(D_y-1)

Preferably again said evaluating step further comprises:

TS0000416

phase-quantising said phase screen to said predetermined number of uniformly distributed phase levels using

$$\varphi_s(k,l) = \exp(2\pi j \times int\{\phi(k,l) \times \psi\}/\psi)$$

where $\varphi_s(k,l)$ is the final sampled and quantised representation of the base-cell pattern for the target hologram device,

j is the complex operator $(-1)^{1/2}$, exp(...) is the exponential operator, and $int\{...\}$ is a quantisation function that rounds its argument to the nearest integer towards minus infinity.

Embodiments of the present invention concern switches based on ferroelectric liquid crystal (FLC) Spatial Light Modulators (SLMs) using in-plane switching to give binary phase modulation. It has been found that contrary to an earlier published paper (K L Tan, W A Crossland & R J Mears, "A comparison of the efficiency and cross-talk of quad and binary phase only holograms based on ferroelectric liquid crystals", Ferroelectrics **213**, 233-240, (1998)) it is NOT possible to achieve multilevel phase modulation with this type of device so the insertion loss cannot be fully minimised, neither can the crosstalk except with considerable difficulty.

Brief description of the drawings

Exemplary embodiments of the invention will now be described with reference to the accompanying drawings in which:

Fig1 shows a schematic diagram of an optical system useable in an optical switch according to the invention;

Fig 2 shows a schematic diagram of first embodiment of an optical switch in accordance with the invention, based upon the configuration of Figure 1;

Fig 3 shows an enlarged view of the interconnect region of Figure 2, and illustrates the Gaussian waist of the beams as they traverse the interconnect region;

Fig 4 is a plot of the expected noise isolation between any 2 adjacent optical paths given aberration-free optics;

Fig 5 shows a first modification of the switch of Figure 2, including an additional negative power lens;

Fig 6 shows a second modification of the switch of Figure 2, including an additional positive power lens;

Fig 7 shows a schematic diagram of a layout of an optical switch modified to reduce cross-talk;

Fig 8 shows a more detailed view of an optical switch with an off-axis additional lens for reducing cross-talk;

BNSDOCID: <WO 0125848A2 >

Fig 9 shows a diagram of an optical switch using reflective hologram devices;

Figure 10 shows a partial block schematic diagram of an embodiment of an optical switch according to the invention, showing connections for generation, storage, and selection of holograms;

Fig 11 shows an arrangement for viewing a computer generated hologram using collimated perpendicular light, with the replay image being formed in the focal plane of an infinite conjugate-ratio lens;

Fig 12 shows a phase-screen for a hologram using the method of the invention;

Fig 13 shows a replicated or tiled base cell pattern across the aperture of a hologram device;

Fig 14a-c show exemplary base cell frame sequences; and:

Fig 15 shows a prior art switch useful in understanding the present invention.

Description of the preferred embodiments

In the various figures, like reference numerals refer to like parts.

Starting by referring to Figure 15, an array of optical sources (101) and an array of optical receivers (107) are arranged as the input elements and output elements of a holographic switch. For many applications, the sources

and receivers may comprise cleaved or end-polished fibres. In other applications, the inputs may be light emitting sources such as lasers or LEDs, and the outputs may be photo-detectors. Each input (101) may transmit a different digital or analogue optical signal through the switch to one (or possibly several) of the outputs (107). Thus up to N different signals may be simultaneously passing through the switch at any instant. The light applied at each input may consist of a single-wavelength modulated by data; a number of different data sources operating at different wavelengths (e.g. a wavelength-multiplexed system); or a continuum of wavelengths. Although the switch is shown in cross-section in Figure 15, the input & output arrays (101,107) are typically 2-dimensional arrays, and the holographic switch comprises a 3-dimensional volume.

To achieve switching, the input array (101) is arranged behind a lens array (102). Each optical signal emitted by the input array enters free-space, where it is collimated by one of the lenses in lens array (102). Each collimated beam then passes through a hologram device (103). The hologram device (103) displays a holographic pattern of phase and/or intensity and/or birefringence that has been designed to produce a specific deflection of the optical propagation directions of the beams incident upon the device. The hologram pattern may also be designed such that each optical beam experiences a different angle of deflection. The device (103) may also have the effect of splitting an individual beam into several different angles or diffraction orders. One application for utilising this power splitting effect is to route an input port to more than one output port.

BNSDOCID: <WO 0125848A2 I >

The deflected optical signals propagate in free-space across an interconnect region (104) until they reach a second hologram device (105). The hologram pattern at the second hologram device (105) is designed in such a way to reverse the deflections introduced at the first hologram device (103) so that the emerging signal beams are parallel with the system optic axis again.

The optical signals then pass through a second lens array (106) where each lens focuses its associated optical signal into the output ports of the receiver array (107). Thus the hologram pattern displayed on the first hologram device (103) and the associated hologram pattern displayed on the second hologram device (105) determine which output fibre or fibres of the receiver array (107) receive optical data from which input fibre or fibres of the input array (101). The interconnect region (104) allows the signal beams to spatially reorder in a manner determined by the specific hologram patterns displayed on the first and second hologram devices (103, 105). The switch also operates reversibly such that outputs (107) may transmit optical signals back to the inputs (101).

In seeking to replace the fixed hologram devices of Figure 15 with reconfigurable devices, a number of problems arise, including the following:

1) In order to implement such a holographic switch an appropriate set of hologram patterns must be chosen. This hologram set must be capable of routing any input channel to any output channel whilst keeping the insertion loss and crosstalk figures within specified

values. This is not a straightforward task as the noise isolation between channels depends heavily on the patterns being used. In particular, the hologram set must be optimised to prevent higher order diffraction beams being launched down the wrong channel.

2) The maximum angular deflection that can be generated by a reconfigurable hologram is typically less than can be achieved by a fixed hologram recording. The length of interconnect region (104) between the planes of the first and second hologram devices (103, 105) is determined by this maximum angular deflection, and therefore a switch typically requires a greater free-space optical path-length than an optical shuffle. Because of component tolerances and packaging design constraints, it is often highly desirable to minimise this optical path-length.

3) The diffraction efficiency of a reconfigurable hologram is typically less than 100%, with some proportion of the shortfall exhibited as an undeflected "zero-order" signal passing straight through the first and second hologram devices (103, 105). Without further enhancement to the switch, these undeflected signals give rise to unwanted noise signals in the receivers, e.g. a fraction of the signal from input 1 always reaches output 1 irrespective of the hologram states, a fraction of the signal from input 2 always reaches output 2, etc. These signals corrupt the proper functioning of the switch.

4) A convenient method of constructing reconfigurable holograms for use within an NxN switch is to integrate

BNSDOCID: <WO 0125848A2 I >

a layer of liquid crystal material above a silicon circuit. This type of SLM typically operates in reflection rather than transmission, and the switch layout shown in Figure 15 is therefore no longer appropriate.

Figure 2 shows the basic configuration of an NxN holographic switch for use with transmissive spatial light modulators. However, for improved understanding, description will first be made of Figure 1 which is identical to Figure 2 save for having no hologram devices. An array (1) of optical sources is disposed on the left as shown, and an array (9) of optical receivers is disposed to the right, as shown.

In the optical path between the input array (1) and the receiver array (9) there are disposed, in order, a first collimating lens (2), a first focusing lens (4) a second collimating lens (6) and a second focussing lens (8). Each of these lenses is a bulk lens, thus avoiding the use of microlenses, with their attendant problems of accuracy, reproducibility and cost. The first collimating lens is spaced from the input array (1) and the second focusing lens is spaced from the output array. The first collimating lens (2) and the first focusing lens (4) define therebetween a fan out region, the first focusing lens and second collimating lens define therebetween an interconnect region and the second collimating lens and the second focusing lens define therebetween a fan in region.

Following input (1), the array of optical signals enter free-space where they are collimated by the first

collimating lens (2) which has a focal length of f_2. Input array (1) is typically arranged in the back focal plane of lens (2) at a distance f_2 from the principal surface of the lens such that the signal beams are collimated in different angular directions. Following lens (2), the collimated signals propagate in the free-space fan-out region (3) towards first focussing lens (4), which has a focal length of f_4. The signals propagating in region (3) are angularly dispersed by lens (2) so that the collimated beams are completely spatially separated by the time they reach first focusing lens (4). The location of lens (4) relative to lens (2) is chosen such that the beams pass across the interconnect region (5) parallel to one another. Typically this condition is met by locating the principal surface of lens (4) a distance f_2+f_4 away from the principal surface of lens (2). An array of focused spots is then typically formed in the front focal plane of lens (4), somewhere within the interconnect region (5).

Following the interconnect region (5), second collimating lens (6) re-collimates the signals and feeds them into the fan-in region (7) where they are focused by second focusing lens (8) into the appropriate output fibres (9). Second focusing lens (8) is typically located a distance f_6+f_8 in front of second collimating lens (6), and the output elements (9) are located in the focal plane of lens (8). In practice each of the first and second collimating and first and second focusing lenses (2,4,6,8) may consist of a single bulk element or equivalent component with optical power such as cemented achromats, compound lens systems, and/or mirror elements. In addition, when the input sources (1) and output

receivers (9) have the same optical numerical aperture of emission and light acceptance respectively (e.g. the inputs and outputs are single-mode fibres) then first collimating lens (2) will have be similar to second focusing lens (8), and first focusing lens (4) will be similar to second collimating lens (6). In this case, a focal plane will exist exactly midway between first focusing lens (4) and second collimating lens (6).

In the case of fibre-to-fibre switching: input and output arrays (1,9) may contain fibres that have been cleaved or end-polished at an angle to reduce back reflections; may be anti-reflection coated; or may consist of a wave guiding device to adapt the optical signals to the correct positions and spacings. Alternatively, some construction for producing 2-dimensional fibre arrays may be used.

Referring to Figure 2, the switch is shown with first (10) and second (11) binary hologram devices, in the form of ferroelectric liquid crystal (FLC) spatial light modulators (SLMs) disposed respectively on the outside of first focusing lens (4) and on the outside of second collimating lens (6) about interconnect region (5). It will be understood by those skilled in the art that the hologram devices may alternatively be placed on the inside of the lenses to define therebetween the interconnect region. However, the arrangement shown is advantageous in that an odd number of bulk lenses -here 1 -between the fibres and the spatial light modulators causes offset variations due to wavelength variations to be convertible to a tilt error at the output. As known to those skilled in the art, tilt errors are less

problematic for optical fibres than offset errors. The hologram devices used in this embodiment are ferroelectric liquid crystal spatial light modulators which are selected because of ease of use as binary light modulators although other binary light modulator devices may be used instead. The spatial light modulators are located as close as possible to outermost surfaces of the first focusing and second collimator lenses (4,6).

The spatial light modulators (10,11) are driven to display various patterns of phase and/or intensity and/or birefringence which are designed to deflect the optical propagation directions of the beams incident upon the devices. At any instant, the hologram pattern displayed at (11) must be designed to restore the deflections introduced at device (10). Thus the deflections introduced by the holograms cause the input signals to be re-ordered and routed to the outputs in a manner according to the hologram patterns displayed. As the hologram patterns are changed, so is the routing of the switch. In this embodiment of the invention, optical switching is achieved without the need for lens array components. By using ferroelectric liquid crystal SLMs, polarisation independence may be achieved. As will be discussed later herein, this is an important feature where the incoming polarisation cannot necessarily be determined

Design equations for constructing an NxN switch are now discussed for the situation where the optical signal beams have Gaussian TEM_{00} profiles. A Gaussian beam is a useful approximation to the optical profile emitted by lasers and cleaved single-mode fibres. As a paraxial

TS0000426

Gaussian propagates in free-space between lenses, its radial dimension changes but its profile remains Gaussian according to the following well-known propagation rule:

$$w = w_o\sqrt{1+\left(\frac{\lambda z}{2\pi w_o^2}\right)^2} \qquad (1)$$

where w_o is the Gaussian waist dimension (minimum beam radius) arbitrarily located at z=0,

w is the transverse beam radius at location z/2,

z/2 is the propagation distance from the waist,

λ is the central optical wavelength of the optical signal beams.

For applications where the optical switch system described with respect to Figures 1 and 2 is designed symmetrically, then each signal beam will form a Gaussian waist of diameter 2w exactly midway between hologram devices (10,11) at the centre of interconnect region (5), as shown in figure 3. For an interconnect distance z between holograms, the beams at planes (10,11) will have Gaussian diameters of 2w given by equation (1) above. In addition, if the distances between lens (4) and hologram (10), and between lens (6) and hologram (11) are negligible, then f_4 and f_6 should both be chosen to be equal to z/2.

Typically it is desirable make the inter-spacing, Δh, of the optical signals at planes (10,11) as small as possible to shorten the interconnect length. However, it

is also desirable to increase this same dimension to reduce cross talk between adjacent signals. Figure 4 is a plot of the expected noise isolation between any 2 adjacent optical paths given aberration-free optics. Parameter γ is defined by equation 2, as:

A system design limit of $\gamma \geq 3$ is often acceptable, giving rise to about 39dB of noise isolation between adjacent signal paths or better. It has been found that there is an optimum (minimum) value for Δh for a given value of Δh found by equating the first derivative of equation (1) to zero (equation 3):

$$\Delta h = \gamma \sqrt{\frac{\lambda z}{\pi}} \qquad (3)$$

In addition, if the hologram devices are pixellated then there exists a maximum useful angle of diffraction, ϕ, that can be introduced by these devices. This angle expressed in equation 4, ultimately determines the minimum interconnect length, z, that sustains correct operation of the switch:

$$\phi \approx \frac{\lambda}{2d} \qquad z \approx \frac{A}{\phi} \qquad (4)$$

where d is the hologram pixellation pitch,
A is the total used hologram aperture.

In the general case, spatial light modulators (10,11) may introduce angular diffraction about just one, or both, axes of rotation and the hologram pixellation pitch may differ between the x and y axial directions.

BNSDOCID: <WO 012584842 1 >

Equations (2) through (4) lead to a design criteria in terms of the required interconnect length versus the number of inputs & outputs that can be supported. For the case where there are N inputs and N outputs arranged on regular 2-dimensional square-grids, the paraxial solution is given in equation 5:

$$z \approx \Delta h\left(\frac{2d\sqrt{N}}{\lambda}\right) \approx 4Nd^2\left(\frac{\gamma^2}{\pi\lambda}\right) \qquad (5)$$

Thus a 32x32 switch constructed using holograms with 20μm feature size, operating at a central wavelength of 1.55μm, and with γ=3, requires the spatial light modulators (10,11) to be spaced apart by at least 95mm. The insertion loss of the switch then increases gradually as the injected wavelength deviates from the design wavelength.

Equation (5) is the minimum optical path-length design for a holographic optical switch. A full design cycle for the switch must however also incorporate a procedure for determining an appropriate set of hologram patterns. This hologram set must typically be at least capable of routing any input to any output according to the capabilities of the hologram devices used, whilst also maintaining various switch performance targets such as the noise isolation between all optical paths and the insertion loss variability as the switch is reconfigured. Under these constraints, the hologram set may not utilise the full range of deflection angles that are available from the hologram devices. In addition, spatial arrangements of the input and output ports other than 1:1

TS0000429

aspect ratio square-packed grids may be better optimised for some applications. Hence it may not be possible to achieve the minimum optical path-length design. For these embodiments, equation (5) should be modified to equation 6:

$$z \approx C\left(\frac{d\Delta h}{\lambda}\right) \approx C^2\left(\frac{\gamma^2 d^2}{\pi\lambda}\right) \qquad (6)$$

where C represents a scale parameter to account for the properties of the chosen hologram set. C must typically be determined by iterative design of the relative input and output port locations.

Each input port of the switch illuminates a unique sub-aperture region of device (10) and each output port collects light from a unique sub-aperture region of device (11). Each sub-aperture must then contain a minimum number of hologram pixels in order to achieve the correct switching functionality.

Equation (7) represents the *minimum* number of hologram pixels that must be present per sub-aperture per axis of diffraction.

$$\text{Minimum number of hologram pixels per port per axis of diffraction} = \frac{\Delta h}{d} = \frac{C\gamma^2}{\pi} \qquad (7)$$

A sample of known data points for high-performance switch designs (≈40dB noise isolation, <1dB loss variability) based on square-packed input/output arrays and utilising binary-phase hologram devices such as ferroelectric-

RNSDOCID: <WO 012584882 I >

liquid-crystal spatial-light-modulators (FLC-SLMs), is tabulated below (Table 1):

Switch Functional Size	Spatial Arrangement of Input & Output Ports	C	Minimum Number of Pixels per Hologram Device
3 x 3	3 x 1	24	207 x 1
9 x 9	3 x 3	24	207 x 207
32 x 32	3 x 11	60	516 x 1891

Table 1 - Requirements for switch layout.

The maximum angular deflection that can be generated by a reconfigurable hologram is typically less than can be achieved by a fixed hologram recording and a switch typically therefore requires a relatively long free-space optical path-length between hologram devices.

Referring now to Figures 5 and 6, the physical distance between hologram devices (10,11) is reduced by introducing additional optical elements to the switch. In these two embodiments, the length of interconnect region (5) and thereby the optical path-length of the switch are reduced by incorporating a fifth lens into the system.

Referring to Figure 6, a further lens element (12) with negative optical power is placed as a field lens in the centre of interconnect region (5), and lenses (4, 6) of the embodiment of Figures 1-5 are replaced by lenses (13,14) respectively with shorter focal lengths. Each of these lenses is a bulk lens and may consist in practice

BNSDOCID: <WO 0125848A2 I >

of a single bulk element or equivalent compound component with optical power such that (equation 8):

$$(f_{13} + f_{14}) < (f_4 + f_6) \qquad (8)$$

Where f_{13} is the focal length of lens (13),
f_{14} is the focal length of lens (14).

The addition of field lens (12) compensates for the shorter focal lengths of (13,14). For the common case when f_{13} equals f_{14}, operation of the switch will be maintained when element field lens satisfies equation 9:

$$f_{12} = \frac{f_{13}^2}{2f_4 - 2f_{13}} \qquad (9)$$

where f_{12} is the focal length of lens (12),
f_4 is the focal length of the lens being replaced.

Another embodiment is shown in figure 6, where a further lens element (15) with positive optical power is placed as a unity-conjugate relay lens in the centre of interconnect region (5), and lenses (4, 6) of the embodiment of Figures 1-5 are replaced by lenses (16,17) respectively with shorter focal lengths. Each of these lenses is a bulk lens and may consist in practice of a single bulk element or equivalent compound component with optical power such that (equation 10):

$$(4f_{15} + f_{16} + f_{17}) < (f_4 + f_6) \qquad (10)$$

BNSDOCID: <WO 012584842 1 >

where f_{15} is the focal length of relay lens (15), f_{16} is the focal length of lens (16), and f_{17} is the focal length of lens (17).

In the embodiment of figure 6, the spatial ordering of the output ports is mirror-reversed about both the x and y axes in order to remain functionally identical to the original switch design. The addition of relay lens (15) compensates for the reduction in focal length of (16, 17). For the common case when f_{16} equals f_{17}, operation of the switch will be maintained when relay lens (15) satisfies equation 11:

$$f_{15} = \frac{f_{16}^2}{2f_4 - 2f_{16}} \qquad (11)$$

Using a 32x32 switch as example, the optical path-length between hologram devices (10, 11) for the three embodiments is as follows.

For the first embodiment, discussed with respect to Figures 1-4, it has already been established that a minimal length for the interconnect region is 95 mm.

For the second embodiment discussed with reference to Figure 5, if f_{13} = f_{14} = 18mm then the central concave element has a focal length of 5.5mm, and the interconnect length is 36mm.

For the third embodiment discussed with reference to Figure 6, if f_{16} = f_{17} = 18mm then the central convex

element has a focal length of 5.5mm, and the interconnect length is 58mm.

Clearly the third embodiment is longer, but it has the advantage of ease of control of optical aberrations.

The diffraction efficiency of a reconfigurable hologram is typically less than 100% due to imperfect optical modulation and/or due to spatial dead-space within the hologram pattern. Some proportion of the efficiency shortfall is often exhibited as an undeflected "zero-order" beam where a zero-order beam is one that passes straight through both hologram devices (10,11). Without further enhancement to the switch, these zero-order signals can generate cross talk in the output ports and thereby corrupt proper switch function.

Where this is a problem the embodiments may be modified so that the zero-order signals pass safely out of the optical aperture of the system. Referring to Figure 7, in a first switch, the input and output arrays (21,29) are offset to opposite sides of a system optic axis (18) whilst all other components remain symmetrically on-axis. Thus the optic axis (18) of the system passes through the centre of all lens elements in the switch, but the input array (21) is offset completely to one side of this axis, and the output array (29) is completely offset to the opposite side. In addition, it is apparent that the optimum aspect ratio for the input and output arrays, given the same maximum diffraction angle capability of the hologram devices, is now 1:2 rather than a square array because of the system asymmetry. This change in aspect ratio will typically be reflected in slightly

BNSDOCID: <WO 0125848A2 I >

TS0000434

higher design values of parameter C (see equation 6 above).

The switch of Figure 7, due to the need to operate in an off-axis manner, may lead to the introduction of performance-limiting optical aberrations.

A configuration which is functionally identical but which allows the optical system to operate in a near-paraxial manner is to adopt the configuration shown in Figure 8. In the switch of Figure 8, the input and output arrays and all lens components remain symmetrically on-axis except a central field or relay lens element (22) or (25) which is laterally offset by a small amount.

Referring to Figure 8, if a point (19) located on the optic axis in the plane of the input array (1) emits an optical signal then it may be interconnected to a point (20) located on the optic axis in the plane of the output array by deflecting an optical beam through an angle +A at device (10) and through an angle -A at device (11). Angle A is a parameter determined by the switch designer in order to avoid zero-order cross talk problems. Points (19) and (20) are typically located in the geometric centres of the input and output array regions respectively. The required lateral offset, α, of the central lens element, as shown in Figure 8, is then, (equation 12):

$$\alpha = (2f_{12} + f_{13}) \times A \qquad (12)$$

if the central element is a negative lens as per figure 5, or

if the central element is a positive lens as per figure 6 (equation 13):

$$a = f_{16} \times A \qquad (13)$$

In both cases A is measured in radians about the axis orthogonal to the direction of displacement of the central lens.

Devices such as multiple-quantum-well modulator arrays, acousto-optic and electro-optic cells and liquid-crystal modulators are all potentially suitable devices for displaying reconfigurable holograms. Hologram devices (10,11) may in actuality be a single hologram pixel array, two individual hologram pixel arrays, or a multiplicity of pixel arrays. As discussed above ferroelectric liquid-crystal (FLC) pixel arrays are particularly well suited to holographic switches because they may be configured as phase holograms in a polarisation insensitive way. Polarisation insensitivity is particularly important for fibre-to-fibre switches where it is relatively difficult to control the polarisation states entering the switch. A thin layer of an FLC material may also be conveniently integrated above a semi-conducting device as a spatial light modulator (SLM). In this case, circuitry on the silicon chip acts as both addressable electrodes for modulating the liquid-crystal, and as mirrors for reflecting the incident light. Holographic switches constructed with FLC-SLMs (Ferroelectric Liquid Crystal Spatial Light Modulators) can be reconfigured relatively quickly.

TS0000436

Referring to Figure 9, an embodiment of a holographic optical switch using reflective hologram devices will be described. Such reflective devices may for example be FLC-on-semiconductor SLMs. Note that beam-splitters are often used in optical systems to accommodate components such as reflective SLMs. However unless such beam-splitting components have careful polarisation control of the optical signal passing through them, they introduce 3dB optical loss per pass. Such constraints are unacceptable in many optical switching applications.

The embodiment discussed with reference to Figure 9 therefore demonstrates a system without the use of beam-splitters.

In figure 9, the input array (1) and output array (9) are arranged at the ends of the switch optics. The input signal beams are collimated by a first lens (32), and focused back into the output ports by a second lens (30). Two reflective hologram devices (35, 38) are arranged about an interconnect region comprising two lenses (34,37), and an additional relay or field lens (36) is added as required. Due to the reflective nature of the hologram devices however, the optical signal beams must now pass twice through lenses (34, 37) in opposite directions. The inward and outward passes through these lenses must also be spatially or angularly separated, to provide a zigzag path. The optical system therefore takes the form of a squashed or upright 'Z' respectively. In addition, lenses (33) and (39) have been added to the switch in order to compensate for these double passes. The combination of lenses (32) and (33) form an optical magnification stage (e.g. an objective lens) which

projects an image of the input array in front of lens (34). Lens (34) then collimates the beams onto the first SLM (35) and feeds the signals into the interconnect region. Likewise, lens (37) collimates the beams onto the second SLM (38) and feeds the signals to the demagnification stage formed by the combination of lenses (39) and (30).

Figure 10 shows a partial block schematic diagram of the switch of Figure 2. Referring to Figure 10, the spatial light modulator (11) has an lcd screen area (211) which has associated control and drive circuitry (not shown) for powering the device. Memory circuitry (212) stores hologram data and selector circuitry (213) responds to a control input (220) to effect switching as desired, by selecting a hologram pattern from the memory for display on the screen area (211). A computer (230) calculates a set of hologram data for storage in the memory circuitry, as will later be described herein. The computer may be disconnected from the memory circuitry in use, once the hologram data has been derived.

In normal use, the second collimating lens (6) provides output beams (206 - only one shown for clarity) which are parallel and applied to the liquid crystal screen area. Upon the screen area a display is provided in accordance with a hologram pattern selected by the control input (220) and the incident beam is diverted by means of the hologram to the required output element in the output array (9, not shown).

An ideal computer-generated hologram (CGH) is a spatial pattern of continuous phase and/or intensity modulation

generated by some fixed or reconfigurable display device. In practice, processing limitations in producing CGH patterns, and device limitations in displaying reconfigurable CGH patterns, mean that practical CGHs are typically spatially sampled (e.g. pixellated) and then quantised to a discrete number of modulation levels. The most common types of CGH provide phase-only modulation, and are often limited to binary phase capability (e.g. $0,\pi$.). Because of the non-linear nature of the phase quantisation process, direct calculation of the optimum CGH pattern required to generate a particular pattern of replay is usually impossible, and therefore heuristic iteration techniques such as simulated annealing or error diffusion have often been employed for hologram design.

Iterative CGH design procedures provide a good balance between optimising the replay field generated by a CGH against some target field, whilst broadly minimising the unwanted noise in the replay. However, the inherent randomness that is typically programmed into these algorithms also means that each calculation cycle may create a CGH with unique noise characteristics, i.e. the user must intervene at some stage to select the most appropriate hologram for his or her application. This 'hit and miss' approach is not well suited to the use of CGHs for optical switches, where the background noise in the replay field must typically be well quantified in order to prevent cross talk build up within the system. There will now be described a design procedure for CGH patterns sets that is suitable for holographic optical switches.

Viewing the diffraction replay image created by a CGH typically involves illuminating the CGH device with coherent or partially-coherent light, and then forming the Fraunhofer far-field diffraction image at some subsequent plane. Referring to Figure 11, the most convenient arrangement for achieving this is to illuminate the CGH 200 with collimated perpendicular light 201, and then to form the replay image 202 in the focal plane of an infinite conjugate-ratio lens 203. According to scalar diffraction theory, the replay image is related to the complex optical transmittance of the CGH device by a scaled 2-dimensional Fourier transform. If the CGH is removed from the system then the lens focuses the light into a single 'zero-order' spot at the centre of the replay field. With the CGH in place, light is diffracted out of this spot into an optical replay distribution of intensity and phase arranged in an (x,y) transverse plane about this zero-order location. In some circumstances, the replay lens may not be present. In these cases, the replay image can be thought of as an angular spectrum of superimposed plane waves.

In a holographic optical switch, the typical requirement for the CGH pattern is for it to produce a replay field with as much optical power concentrated into a single output spot as possible. This condition minimises the routing loss through the switch and is usually achieved by defining a target field for the CGH iteration procedure which contains a single peak at the required replay peak location (equation 14):

BNSDOCID: <WO 0125848A2 I >

$$\text{Target}(x,y)=\delta(x-X_p,y-Y_p) \qquad (14)$$

where δ is the idealised delta-function replay peak profile, and (X_p, Y_p) is the main replay spot location relative to the zero-order position.

In addition, the locations and intensities of all noise peaks within the CGH replay field must also be well quantified in order that the switch can be designed in such a way that this noise does not reach any of the switch output ports - this noise could give rise to cross talk within the switch. This design problem for holographic switches can be tackled by examining the replay fields for all the CGH patterns that will be required to operate the switch in all configurations. The switch inputs and outputs must then be placed in appropriate positions to avoid cross talk problems. However since the set of required holograms is actually determined by the positions of the inputs and outputs in the first place, this cross talk minimisation problem is an iterative process by necessity. The complexity of traditional CGH design procedures combined with the complexity of the switch design procedure means that it has not been possible to design large holographic switches according to the prior art knowledge.

In summary, using an iterative CGH design algorithm has several significant drawbacks when applied to optical switching: 1) it is difficult to control the noise distributions in the replay fields that are generated; 2) the CGH design algorithms are numerically intensive to calculate; 3) the target output spot position defined by

equation (1) has limited resolution. The last point arises because the target field for the CGH algorithm is typically sampled at the same resolution as (or an integer fraction of) the actual CGH display device. Thus if the hologram display contains M pixels, then the target field also contains a maximum of M discrete and evenly spaced sample points. Using traditional approaches to CGH design, the target peak may only be located on these grid points.

A non-heuristic method for generating phase-only hologram patterns suitable for optical switch applications, has been developed based on the generation and quantisation of a mathematical phase mask. The method allows better resolution for the positioning of the target spot in the replay field, and allows CGHs to be determined rapidly, thereby allowing much greater iteration in the design and placement of the switch input and output ports. In addition, the noise fields generated by CGH patterns designed using this method can be accurately quantified in terms of noise intensity and location.

Phase-only CGHs suitable for optical switches are defined by a pixellated base-cell pattern. This base-cell is directly calculated from the co-ordinates of the main replay spot for the desired hologram, and is constructed using a rapid phase-quantisation procedure. In order to form the final CGH, the base-cell pattern is tiled or replicated in the (x,y) plane of the hologram display device until the entire aperture of the device is filled. Therefore contrary to other CGH design procedures, the design of the hologram pattern does not directly relate to the resolution of the hologram display device.

BNSDOCID: <WO 0125848A2 I >

TS0000442

Instead, the base-cell is typically tiled a non-integer number of times, and generally a different number of times in the x and y directions respectively. As a consequence of this approach, the principal CGH replay mode location is not restricted to a discrete number of locations, but can be placed anywhere within the addressable region of the CGH replay plane in a quasi-continuous manner.

Furthermore, the design of the base-cell pattern is optimised to maximise the power in a single peak (henceforth called the 'principal mode') of the CGH replay field. The precise location of this peak relative to the zero-order location is used to uniquely define the base-cell design of the hologram according to a deterministic algorithm. Furthermore, the noise properties of the replay field generated by the CGH can typically be described analytically in terms of a summation of regularly spaced peaks (henceforth called modes). Given the direct correspondence between base-cell pattern, principal mode location and noise field, it is then a relatively simple matter to construct procedures to design CGH sets for holographic switches. The speed of CGH generation, and the predictable harmonic structure of the replay field are advantageous in the design of holographic switches.

The hologram base cell pattern is calculated from the normalised angular deviation that the CGH is required to impart upon a collimated paraxial beam of light incident upon the hologram pattern. Thus if θ_y & θ_x are the (small-angle) optical diffraction angles of rotation that the CGH is to introduce about the y and x axes

respectively then two dimensionless parameters (η_p, ξ_p) that describe the principal replay mode coordinate for the desired hologram can be defined by:

$$\theta_y \approx \frac{\lambda}{P_x}\eta_p \qquad \theta_x \approx \frac{\lambda}{P_y}\zeta_p \tag{15}$$

where λ is the wavelength of light incident upon the CGH,

P is the pixel pitch of the CGH display device (along x & y axial directions).

Alternatively (η_p, ξ_p) may be defined in terms of the physical coordinate of the principal replay spot relative to the zero-order location (equation 16):

$$X_p = \frac{f\lambda}{P_x}\eta_p \qquad Y_p = \frac{f\lambda}{P_y}\zeta_p \tag{16}$$

where (X_p, Y_p) is the target principal mode location for the hologram, and

f is the focal length of the lens used to form the far-field diffraction image.

In order to calculate the base-cell pattern that will route light to according to equations (15) and (16), the normalised target coordinate (η_p, ξ_p) for the principal mode should be written as rational numbers (equation 17):

$$\eta_p = N_x/D_x \qquad \zeta_p = N_y/D_y \tag{17}$$

where N_x, N_y, D_x and D_y are integers.

TS0000444

However according to normal CGH diffraction theory, there is an upper limit on the maximum useful diffraction angle that may be generated by a pixellated hologram pattern. In terms of the normalised target coordinates (η_p, ξ_p), the principal replay mode can only be located within a square region bounded by the corners (-0.5,-0.5) to (+0.5,+0.5) inclusively, where (0,0) represents the zero-order location. The 4 integers that describe the hologram base-cell must therefore satisfy equation 18:

$$-\tfrac{1}{2}D_x \le N_x \le \tfrac{1}{2}D_x \quad -\tfrac{1}{2}D_x \le N_y \le \tfrac{1}{2}D_y \quad 1 \le D_x \le R_x \quad 1 \le D_y \le R_y \qquad (18)$$

where (R_x, R_y) is the resolution (in number of pixels) of the hologram display device.

For cases where the normalised target coordinate of the principal mode cannot precisely be written as rational fractions, then coordinate (η_p, ζ_p) should be rounded until it does satisfy equations (17) and (18). However it can immediately be seen that the technique described here is advantageous compared to prior art methods of hologram generation. For example, if R_x=R_y=25 pixels, then simulated annealing provides a grid of only 625 locations where the target principal mode can be located. In contrast, the technique described here provides a potential capability of 10,000 target locations. When R_x=R_y=100 then the advantage is even more convincing - 10,000 locations vs. 2,316,484.

D_x and D_y specify the size (number of pixels) of the base-cell pattern required to define the hologram. In general, the smaller the values of D_x and D_y, the more robust the hologram will be against any image errors within the

hologram device, and the cleaner the replay field generated, i.e. fewer noise peaks will be present in the replay. The rational fractions of equation (40) must be simplified to their lowest denominator forms, or the procedure for generating the base-cell pattern will produce incorrect results, i.e. D_x must not be an integer multiple of N_x and D_y must not be an integer multiple of N_y.

The unique base-cell pattern for routing light to coordinate (η_p, ζ_p) is now calculated in 2 steps. Firstly, (Equation 19) a spatially sampled phase-screen ϕ is defined in terms of the above rational fractions. This phase-screen contains $(D_x \times D_y)$ sample points, which correspond to the pixels of the base-cell pattern. A typical phase-screen is shown graphically in figure 12.

$$\phi(k,l) = k\frac{N_x}{D_x} + l\frac{N_y}{D_y} \qquad (19)$$

Where $k = 0,1,2 \ldots (D_x - 1)$, and $l = 0,1,2 \ldots (D_y - 1)$.

In the second step, the phase-screen is phase-quantised to the same number of discrete, uniformly distributed phase-levels, ψ, that are supported by the device that the hologram will be displayed on:

$$\varphi_s(k,l) = \exp(2\pi j \times int\{\phi(k,l) \times \psi\}/\psi) \qquad (20)$$

where $\varphi_s(k,l)$ is the final sampled and quantised representation of the base-cell

pattern for the target hologram device,

& j is the complex operator $(-1)^{\frac{1}{2}}$,

& exp(…) is the exponential operator,

& *int*(…) is a quantisation function that rounds its argument to the nearest integer towards minus infinity.

Table 2 below gives some design examples of base-cell hologram images for binary-phase devices. Here the base-cell patterns are expressed in terms of the relative phase-angle that the hologram display device must impart at each pixel. These phase angles are defined as:

$$arg\{\varphi_s(k,l)\} = arctan\left\{ Imag\{\varphi_s\} \Big/ Real\{\varphi_s\} \right\} \qquad (21)$$

	CGH Base-Cell Design, $arg\{\varphi_s(k,l)\}$								
	η_p=0.5, ζ_p=0.5		η_p=0.375, ζ_p=−0.25 i.e. (3/8,-1/4)						
Binary-phase (ψ = 2)	π	0	0	π	0	0	π	0	π	π
	0	π	π	π	0	π	0	0	π	0
			π	0	π	π	0	π	0	0
			0	0	π	0	π	π	0	π

To form the final hologram image on the display device, the base-cell pattern must be tiled to fill the entire available hologram aperture. This replication will typically occur a non-integer number of times, and generally a different number of times in the *x* and *y* directions, figure 13.

Fourier theory predicts that a non-integer number of replications of the base-cell will typically cause a phenomenon known as 'spectral leakage,' whereby a distortion of the spectral domain (i.e. the replay field) occurs unless a 'windowing' function is employed. The holograms generated are thus not illuminated by plane waves, but instead by beams exhibiting apodisation. This apodisation provides the required windowing function and ensures that the replays of the base-cell and of the final hologram image correspond.

One example of a suitable apodisation function is the TEM_{00} Gaussian mode profile. This is a good approximation to the fundamental optical profile emitted by most lasers, waveguides and cleaved fibres. A circularly symmetric TEM_{00} Gaussian intensity profile is usually defined in terms of a beam radius, w, as in equation 22:

$$E_I(x,y) = \left| \exp\left\{ -\frac{x^2 + y^2}{w^2} \right\} \right|^2 \qquad (22)$$

If this Gaussian field is incident upon a hologram device having a total optical aperture of A, then a useful measure of the effect of the windowing function can be gauged from the parameter γ, where (equation 23):

$$\gamma = \frac{w}{A} \qquad (23)$$

Empirically, it is found that values of $\gamma \approx 3$ and above provide adequate Gaussian apodisation. This Gaussian apodisation meets the windowing function requirement that the optical field intensity must tend towards zero at the edges of the hologram device aperture. Other optical

TS0000448

profiles may also be employed provided this condition is met.

Provided the apodisation function is appropriate, then the location of the principal mode generated by the composite tiled hologram will be the same as the location of the principal mode that was used to design the base-cell pattern, subject to any limitations of scalar diffraction theory. In the case of Gaussian apodisation, it is empirically found that approximately 2 complete replications of the base-cell pattern should be present in the final hologram image in order to produce a reliable replay image. However provided this constraint is observed, then the replay spots have profiles determined by the apodisation function, but the spot locations generated by the apodised CGH are the same as predicted by analysis of the base-cell pattern alone.

Holograms designed according to the steps outlined above typically exhibit a regularly spaced array of noise peaks in their replay images. In terms of normalised coordinates, if the principal mode is located at a position denoted by the fraction N/D, then noise modes may also arise at fractional locations n/D, where n is any integer between minus infinity and plus infinity such that $n \neq N$. However not all indicated fractional locations may actually exhibit noise. The presence or absence of a particular noise mode in the hologram replay can be predicted by examining the Fourier series for the base-cell pattern, i.e. the presence or absence of specific harmonics in the Fourier series reveals the presence or absence of the corresponding noise modes in the final hologram replay.

BNSDOCID: <WO 0125848A2 I >

TS0000449

Binary-phase holograms are particularly important because they may be displayed on reconfigurable hologram display devices such as ferroelectric liquid-crystal spatial-light-modulators see O'Brien et al for example. The basic modal structure for a binary-phase hologram replay image can be derived analytically from the target peak position coordinates (γ_p, ζ_p) using Fourier theory. If D is calculated as the lowest common multiple of D_x and D_y given in equation (17), then the positions and relative intensities of the replay modes are given by equation 24:

If D is an even integer:

$$Modes(\eta,\zeta) = Env(\eta,\zeta) \times \sum_{m=1}^{D/2} \sum_{p=-\infty}^{\infty} \sum_{q=-\infty}^{\infty} \left\{ \frac{2}{D\sin\left(\frac{(2m+1)}{D}\pi\right)} \right\}^2 \times \delta\left(p+\eta-(2m+1)\eta_p, q+\zeta-(2m+1)\zeta_p\right)$$

If D is an odd integer:

$$Modes(\eta,\zeta) = Env(\eta,\zeta) \times \sum_{m=1}^{D} \sum_{p=-\infty}^{\infty} \sum_{q=-\infty}^{\infty} \left\{ \frac{0.5}{D\sin\left(\frac{(2m+1)}{2D}\pi\right)} \right\}^2 \times \delta\left(p+\eta-(2m+1)\eta_p, q+\zeta-(2m+1)\zeta_p\right) \quad (24$$

The function $Env(\eta,\zeta)$ is an intensity envelope function calculated as the optical diffraction image of a single CGH pixel aperture. For square or rectangular pixels, this function is given by equation 25:

$$Env(\eta,\zeta) = \left(\tau_x\tau_y \,\mathrm{sinc}(\pi\tau_x\eta)\,\mathrm{sinc}(\pi\tau_y\zeta)\right)^2 \quad (25)$$

where τ is a pixel "fill-factor" term defined as the ratio of the pixel aperture that modulates light divided by the pixel separation.

BNSDOCID: <WO 012584BA2 I >

TS0000450

Equation (24) only includes the mode locations and signal/noise powers. It does not include the mode-shaping or broadening effects caused by apodisation of the CGH illumination. Analysis of these effects generally requires a full diffraction calculation of the composite hologram image. However, the relatively simple modal representation of the hologram replay distribution derived from the base-cell pattern (and equivalent expressions derived for hologram displays capable of more than 2 phase-levels) is usually adequate to describe the performance of the CGH, and considerably reduces the calculation time required to design hologram sets for optical switches.

In a first application, a reconfigurable CGH pattern designed according to the above procedure is used as an adaptive optical element in order to route an optical beam or signal into an output port, optical receiver or detector. In this case using an illuminated CGH display, a Fourier replay lens and an output port or ports which are located in the plane of the hologram replay image, a hologram or set of holograms are then displayed in order to locate the principal mode (or other replay mode) into the output port. In embodiments of the present technique, the principal mode can be located into the output port with much greater resolution and precision than is achievable using alternative hologram design techniques. Using this technique, the principal mode can typically be located around the (x,y) plane of the replay image with sub-micron accuracy. This high resolution is particularly important for alignment critical systems such as applications where the output receiver is a single-mode optical fibre.

BNSDOCID: <WO 0125848A2 I >

In a second application, an array of optical receivers or detectors is placed in the replay plane of the hologram and the principal mode (or other replay mode) is scanned about (x,y) in order to characterise the individual positions of the array elements. In this embodiment, a device such as a single-mode fibre array can be tested by varying the CGH in order to maximise the optical return signal in each fibre output and thereby determine the relative positions of the array elements. In this way, it is possible to assess any alignment errors or defects in the locations of the array elements.

In a third application, the principal replay mode (or other replay mode) is scanned about (x,y) in order to determine the numerical aperture, linear aperture, or acceptance mode-distribution of an output receiver or detector.

In a fourth application, simulated annealing or other CGH design procedure is applied *to the base-cell pattern* of the hologram (rather than to the hologram itself) in order to suppress a particular noise mode or modes, or otherwise to alter the distribution of optical power within the replay image.

In a fifth application, the shift-invariant nature of the CGH image is utilised in order to change or update the hologram image without altering the replay intensity distribution. In this case, the base-cell pattern is placed at different locations within the CGH aperture before it is tiled to fill the available display aperture. Each CGH thus generated is a shifted and

BNSDOCID: <WO 0125848A2 I >

apertured version of the other CGHs, but the replay intensity image remains unaltered to all intensive purposes no matter which hologram is displayed. A further set of hologram patterns can also be calculated such that when they are displayed in sequence, all pixels of the hologram device spend an equal (or otherwise specified) amount of time in each hologram phase state. The sequence may then be repeated for as long as necessary. This application is particularly important for CGH devices such as FLC-SLMs, where the phase-modulating pixels must be continuously switched in order to maintain a net AC voltage at each pixel, but where it may be desirable to maintain a constant replay image.

It is well known to those skilled in the art that it is undesirable for liquid crystal devices to have a constant potential applied to them so that they remain in a predetermined bias state for long periods of time. It is also known to those skilled in the art that holograms are translation-invariant. An advantageous technique is thus to scroll the hologram pattern (in either 1- or 2-dimensions as appropriate) across the display device by one or more pixels at a time and at regular intervals. Circuitry is accordingly provided for this purpose. Such operation has no effect on the functionality, by contrast to what would happen in a display application, where the viewer would see movement taking place. The sequence of frames typically repeats when the shifted base-cell pattern used to generate each frame exactly coincides with a tiled version of the base-cell used to generate the first frame, i.e. the hologram has shifted by an integer number of base-cell lengths. Figure 14(a) demonstrates a frame sequence for a binary-phase hologram

device with 7 pixels displaying a (0.25,0) hologram. In this figure, the base-cell pattern shifts rightwards by 1 pixel between each frame and the next. Note that each column of the sequence in this example achieves an equal overall amount time in each phase state.

For devices such as FLC-SLMs, it may also be desirable to minimise the number of pixels that must undergo phase-state changes per frame change whilst still achieving a near-constant replay field. This is particularly important in applications where there is continuous optical data stream passing through the system. For these applications it may be necessary to "evolve" each frame into the next by altering one, or a group, of pixels at a time, rather than instantaneously displaying the whole of the next frame. Figure 14(b) shows a partial sequence of the extra frames that could be inserted into the sequence of figure 14(a) in order to reduce the number of pixels that change at a time. In this example, only 1 pixel changes at a time in order to evolve frame #1 of figure 14(a) into frame #2. Using the sequence of figure 14(b), there may be some distortion of the replay image due to the imperfect intermediate holograms that are introduced. However, such distortion may be minimised by careful choice of the frame sequence.

For some base-cell patterns, simply shifting the hologram may not be sufficient to produce an equal duration in all phase states. In this case, it may be necessary to introduce versions of the base-cell that have been adjusted by a phase-offset of $(2\pi.u)/\psi$. where u is an integer in the range $1...\psi$. Because the offset is applied to all pixels, it doesn't alter the replay image.

However, it does alter the representation of the base-cell. Figure 14(c) shows an example for a binary-phase (0.2,0) hologram that combines the phase-offset method with frame shifting.

In a sixth application, such holograms are used to construct an optical switch. Optical switches are emerging as an important enabling technology for optical networks. Holographic optical switches that use reconfigurable CGHs to route beams of light in free-space between arrays of optical inputs and arrays of optical outputs have several important performance advantages compared to competing technologies such as scalability and high signal to noise margins. A 1xM holographic switch is described in "Polarisation insensitive operation of ferroelectric liquid crystal devices", S.T. Warr and R.J. Mears, Electronics Letters 31:9(1995) p.714-715 and an MxM switch has also been described.

Up until the present time, the complexity of hologram design algorithms, the limited 'resolution' available in the CGH replay field, and the full scalar-wave diffraction theory required to analyse the replay images has made it impossible to design holographic switches with large numbers of inputs and outputs. However, the currently described technique is capable of providing much better prospects for designing these large holographic switches.

According to "Polarisation insensitive operation of ferroelectric liquid crystal devices", S.T. Warr and R.J. Mears, Electronics Letters 31:9(1995) p.714-715, a 1xM switch comprises an input signal which is collimated to

TS0000455

illuminate a reconfigurable CGH; a Fourier lens to form the replay image; and an array of optical outputs. The array of outputs are placed in the replay plane of the hologram and various CGH images are displayed in order to route the input signal to one or more of the output ports. The 1xM switch therefore requires a set of at least M different hologram images so that the input signal may be routed to each of the output ports. The switch must be designed in such a way that the outputs coincide with the locations of the principal replay modes of the hologram set, but also in such a way that the noise modes generated by any hologram in this set never gives rise to a significant output signal. The challenge then is to design a set of "orthogonal" holograms suitable for providing the switching function without introducing crosstalk.

Thus, the design of a set of holograms to implement a 1xM switch is reduced to the problem of determining a set of M fractions defined by equation (17) which represent both the CGH patterns required to operate the switch, as well as the proper locations for the output ports as given by equation (16). Typically there are a number of constraints that must be satisfied by the chosen set of fractions, including but not limited to:

- there may be some limit to the minimum allowable physical distance between any pair of output ports related to the physical dimensions (or other property) of these ports,

- there may be some finite number of CGH pixels available which places a limit on the set of fractions that can be

BNSDOCID: <WO 0125848A2 I >

considered during the design procedure according to equation (19),

- there may be some maximum allowable variation of optical insertion loss through the switch as it is configured between the various outputs. Because the optical power diffracted into the principal replay mode generally declines with increased angular deflection, this constraint may determine the largest fraction that can be considered in the design,

- there may be some time-limit allocated to complete the design, and therefore less useful fractions such as those with large denominators (which exhibit a greater number of noise modes) may be automatically excluded from the design process,

- there may be additional constraints introduced by the CGH display device, such as the automatic production of a large zero-order spot, which may influence the final choice of fractions,

- there may be some crosstalk specification for the switch which determines how close any noise mode generated by any hologram in the set may be located relative to one of the output ports.

The set of fractions determines both the positions of the output ports and the positions of the noise modes relative to these outputs. In order to minimise crosstalk, the design procedure must therefore be iterative. Thus the search for a suitable set of fractions for the 1xM switch given the above constraints

can be solved using a goal-search procedure such as any one of a number of well-known heuristic algorithms (examples include recursive functions and tree-searches). In this case, a simple analytical expression for the location and intensity of the noise modes such as given by equation (24) for binary-phase devices, can greatly reduce the calculation time required to design the hologram set.

A similar approach can also be employed to design MxM switches. An MxM switch comprises an array of optical input signals; an array of reconfigurable CGHs displayed on a first hologram device; a free-space interconnect region; an array of reconfigurable CGHs displayed on a second hologram device; and an array of optical outputs. The input signals are collimated to illuminate the array of CGHs on the first device, are deflected by the hologram images on this device and then propagate across the interconnect region where they are allowed to spatially reorder. The second array of CGHs then deflects the signals into the output ports. In order to route any input to any output, the optical signal must be deflected through some angle at the first CGH device, and then typically through an equal and opposite angle at the second CGH device.

For design of an MxM switch, the input port locations may be represented in normalised coordinates by (η_i,ξ_i) and the output port locations by (η_o,ξ_o). The holograms required to route an input to an output according to the invention are therefore $(\eta_o-\eta_i,\xi_{..o}-,\xi_i)$ and $(\eta_i-\eta_{o..},\xi_i-,\xi_o)$ displayed in the correct array positions upon the first and second hologram devices respectively. In addition,

RNSDOCID: <WO 0125848A2 I >

the first hologram generates a set of noise modes which propagate in different directions and arrive at the second device in various spatial locations. The second hologram also has a set of noise modes which allow different optical propagation directions to reach the output port. Thus for each of the M^2 different connection paths between an input port and an output port, the noise modes generated by the 2 hologram devices must be checked that they do not give rise to an unacceptable crosstalk signal in any of the other output ports.

Thus even using a simplified expression for the noise modes such as equation (24), the iterative placement of input and output ports for an MxM switch is a formidable task. However in many applications it is desirable for the input and output ports to be arranged on a regular grid, e.g. $\eta_i=\eta_o={}^1/_{13}$, ${}^2/_{13}$, ${}^3/_{13}$ etc. Unfortunately, the noise modes generated by the holograms required to interconnect ports arranged in a regular fashion tend to route noise straight into other output ports, thereby leading to severe crosstalk problems. The solution disclosed here is to choose a denominator for the fractional locations of the input and output ports which is divisible by 2,3,4, etc. such that the noise mode distribution is more favourable. An example of a 32x32 switch configuration that exhibits very high signal-to-noise margins by using a denominator of 60 (=3x4x5) is given in table 3.

An alternative technique employs a Fourier Series 'picture' of a beam-steering switch.

The physics is a 2-D version of X-ray diffraction from a crystalline lattice of atoms, so the same notation and analysis methods can be used.

The input to the SLM is the far-field from the fibre or input waveguide, call this Fib(x,y).

The SLM is treated as an infinite, periodic, phase-modulation, Ph(x,y, Λ), of period Λ, multiplied by a top-hat function, Top(x,y), representing the finite extent of the SLM. Hence the electric field just after phase modulation is given by equation 26 as

$$Fib(x,y) \bullet Ph(x,y,\Lambda) \bullet Top(x,y) = (Fib(x,y) \bullet Top(x,y)) \bullet Ph(x,y,\Lambda) \quad (26)$$

where the • represents multiplication.

The output from the switch is the FT (Fourier Transform) of the electric field just after phase modulation is given by expression 27 as

$$FT(Fib(x,y) \bullet Top(x,y)) * FT(Ph(x,y,\Lambda)) \quad (27)$$

where the * symbol represents convolution.

Now, because the phase modulation Ph(x,y, Λ) is periodic and of infinite extent, the FT is an infinite set of delta functions of separation in ksinθ space of $2\pi/\Lambda$, centred on the origin given by equation 28:

$$FT(Ph(x,y,\Lambda) = \sum_{i=-\infty}^{\infty} \sum_{j=-\infty}^{\infty} p_{ij} \delta\left(\sin\theta_X - \frac{j\lambda}{\Lambda_X}, \sin\theta_Y - \frac{i\lambda}{\Lambda_Y}\right) \quad (28)$$

where λ is the optical wavelength, θ_X is the beam-steering angle from the x-axis, measured in the x-z plane, θ_Y is

the beam-steering angle from the y-axis, measured in the y-z plane. In its most general form Λ can be represented as a vector: Λ_X and Λ_Y are the x and y components of the period vector Λ.

Input Port Locations (η_i , ξ_i)	Output Port Locations (η_o , ξ_o)
$(-1/60 , -1/12)$	$(+1/60 , -1/12)$
$(-1/30 , -1/12)$	$(+1/30 , -1/12)$
$(-1/20 , -1/12)$	$(+1/20 , -1/12)$
$(-1/60 , -1/15)$	$(+1/60 , -1/15)$
$(-1/30 , -1/15)$	$(+1/30 , -1/15)$
$(-1/20 , -1/15)$	$(+1/20 , -1/15)$
$(-1/60 , -1/20)$	$(+1/60 , -1/20)$
$(-1/30 , -1/20)$	$(+1/30 , -1/20)$
$(-1/20 , -1/20)$	$(+1/20 , -1/20)$
$(-1/60 , -1/30)$	$(+1/60 , -1/30)$
$(-1/30 , -1/30)$	$(+1/30 , -1/30)$
$(-1/20 , -1/30)$	$(+1/20 , -1/30)$
$(-1/60 , -1/60)$	$(+1/60 , -1/60)$
$(-1/30 , -1/60)$	$(+1/30 , -1/60)$
$(-1/20 , -1/60)$	$(+1/20 , -1/60)$
$(-1/60 , 0)$	$(+1/60 , 0)$
$(-1/30 , 0)$	$(+1/30 , 0)$
$(-1/20 , 0)$	$(+1/20 , 0)$
$(-1/60 , +1/60)$	$(+1/60 , +1/60)$
$(-1/30 , +1/60)$	$(+1/30 , +1/60)$
$(-1/20 , +1/60)$	$(+1/20 , +1/60)$
$(-1/60 , +1/30)$	$(+1/60 , +1/30)$
$(-1/30 , +1/30)$	$(+1/30 , +1/30)$

$(-1/20\ ,\ +1/30)$	$(+1/20\ ,\ +1/30)$
$(-1/60\ ,\ +1/20)$	$(+1/60\ ,\ +1/20)$
$(-1/30\ ,\ +1/20)$	$(+1/30\ ,\ +1/20)$
$(-1/20\ ,\ +1/20)$	$(+1/20\ ,\ +1/20)$
$(-1/60\ ,\ +1/15)$	$(+1/60\ ,\ +1/15)$
$(-1/30\ ,\ +1/15)$	$(+1/30\ ,\ +1/15)$
$(-1/20\ ,\ +1/15)$	$(+1/20\ ,\ +1/15)$
$(-1/60\ ,\ +1/12)$	$(+1/60\ ,\ +1/12)$
$(-1/30\ ,\ +1/12)$	$(+1/30\ ,\ +1/12)$

Table 3 - Input and output port locations for a 32x32 switch.

Due to the periodicity of the phase modulation we can use Fourier series to calculate the amplitude, p_{jj} , of each of these delta functions: the answer is exact, assuming diffraction in the Fraunhofer limit. For large beam-steering angles the Fresnel obliquity factor $((1+\cos\theta)/2)$ should be included, but SLM pixels are not small enough for this to be relevant. This obliquity factor (which arises from the electromagnetic scattering properties of a Hertzian dipole) is the only fundamental reason for a maximum beam-steering efficiency that decreases with beam-steering angle.

Let the optical system be such that a beam-steering angle θ is converted to a transverse position, $L\tan\theta$. Assuming $\sin\theta \approx \tan\theta$ we then have a set of delta functions at output positions (u,v) given by equation 29:

$$FT(Ph(x,y,\Lambda) = \sum_{i=-\infty}^{\infty}\sum_{j=-\infty}^{\infty} p_{ij}\delta\left(u - \frac{jL\lambda}{\Lambda_x}, v_Y - \frac{iL\lambda}{\Lambda_Y}\right) \quad (29)$$

RNSDOCID: <WO 0125848A2 I >

The net output is the above, convolved with the FT(Fib(x,y) • Top(x,y)): call this g(u,v), or in words, the output 'spot'. Hence what we get is g(u,v) (the output spot) replicated all over the output plane with an amplitude (and phase) depending on the value of the Fourier coefficients of the periodic phase modulation according to equation 30:

$$output = \sum_{i=-\infty}^{\infty} \sum_{j=-\infty}^{\infty} p_{ij} g\left(u - \frac{jL\lambda}{\Lambda_X}, v_Y - \frac{iL\lambda}{\Lambda_Y}\right) \quad (30)$$

A transverse translation of the phase modulation Ph(x,y, Λ) changes the phase of the Fourier coefficients p_{ij} , and hence the phase of the output spots, but not their amplitude. As long as the separation of the delta functions is greater than the significant extent (in transverse width) of the output spots, each spot can be considered independent, and hence the coupling efficiency into the output fibre or waveguide is not affected by transverse translation of the phase modulation.

To design a switch using beam-steering, the general objective is to position a set of output fibres or waveguides so that for each configuration of the SLM, the selected output fibre or waveguide will receive ONE of these replications of g(u,v) (one of the output spots), and to minimise (or keep below a set threshold) the power coupled from any other (unwanted) replication of g(u,v) into any other output fibre or waveguide.

A method has been previously presented (M J Holmes et al "Low crosstalk devices for wavelength routed networks" IEE Colloquium, June 8th, 1995) so that the unwanted output spots will never couple perfectly (i.e. in perfect alignment) into any other waveguide or output fibre. The

method in the paper was for a 1:N beam-steering switch with output into a non-regular 2-D array of output fibres or waveguides. We discuss here:

(i) a special case of the earlier method allowing beam-steering into a regular 2-D array of output fibres or waveguides. It is this regularity of the output fibre spacing that allows the crosstalk suppression method to be further applied to an N:N switch.

(ii) an extension of the earlier method in that it is recognised that even diffraction orders tend to be very weakly generated, particularly when the period of the phase modulation is an even number of pixels. This increases the number of allowable periods.

BNSDOCID: <WO 0125848A2 I >

Claims:

1. An optical switch comprising an input optical fibre array and a receiver array, and an optical system connecting the input optical fibre array to the receiver array wherein the optical system comprises a first bulk lens for receiving light from the input optical fibre array, a first ferroelectric liquid crystal spatial light modulator, a second ferroelectric liquid crystal spatial light modulator, each spatial light modulator being adapted for providing a respective selectable set of holograms, an interconnect region between said first and second ferroelectric liquid crystal spatial light modulators, and a second bulk lens providing output light to the output array.

2. The optical switch of claim 1 further comprising a pair of lenses disposed respectively between said first bulk lens and the first spatial light modulator, and between the second spatial light modulator and the second bulk lens.

3. The optical switch of claim further comprising a pair of lenses disposed between said spatial light modulators to define there between said interconnect region.

4. The optical switch of any of claims 1 -3wherein said spatial light modulators are transmissive.

5. The optical switch of any preceding claim wherein the first bulk lens is disposed to provide a plurality of collimated light beams from said input optical fibre array, said pair of lenses comprises a second lens and a

RNSDOCID: <WO 0125848A2 I >

third lens, said second lens for receiving said collimated light beams and providing a corresponding plurality of mutually parallel beams and said third lens being disposed for receiving said mutually parallel beams and collimating said beams, and said second bulk lens is a fourth lens being disposed for focussing said beams onto said receiver array.

6. The optical switch of any of claims 1- 4 wherein the first bulk lens is disposed to provide a plurality of collimated light beams from said input optical fibre array, said pair of lenses comprises a second lens and a fourth lens, the said second lens for receiving said collimated light beams and providing a corresponding plurality of mutually convergent beams, the optical system further comprising a third lens having a negative power, receiving said convergent beams and providing mutually divergent output beams, and the fourth lens being disposed for receiving said mutually divergent beams and collimating said beams wherein said second bulk lens is a fifth lens being disposed for focussing said beams onto said receiver array.

7. The optical switch of any of claims 1-4wherein the first bulk lens is disposed to provide a plurality of collimated light beams from said input optical fibre array, said pair of lenses comprises a second lens and a fourth lens, the said second lens for receiving said collimated light beams and providing a corresponding plurality of mutually convergent beams, the optical system further comprising a third lens having a positive power, receiving said convergent beams and providing mutually divergent output beams as a unity conjugate

BNSDOCID: <WO 0125848A2 I >

TS0000466

lens, and the fourth lens being disposed for receiving said mutually divergent beams and collimating said beams wherein said second bulk lens is a fifth lens being disposed for focussing said beams onto said receiver array.

8. The optical switch of any preceding claim wherein the optical system has an optical axis and the input and receiver arrays are mutually offset to opposite sides of the system optical axis, other components remaining on-axis.

9. The optical switch of claim 6 or 7 wherein the optical system has an optical axis and the input and receiver arrays, the first, second, fourth and fifth lenses are disposed on the system optical axis and the third lens is laterally offset there from.

10. The optical switch of claim 1, 2 or 3 wherein the spatial light modulators are reflective.

11. The optical switch of claim 10 wherein the optical system has a zigzag axis, and each of said pair of lenses is disposed with respect to an associated spatial light modulator such that light travelling along said axis passes twice through each of said lenses.

12. The optical switch of claim 10 or 11 wherein each of said first and second bulk lenses has an associated further lens disposed to form an optical magnification stage.

13. The optical switch of any of claims 10 - 12 wherein a relay lens is disposed in the interconnect region.

14. The optical system of any of claims 10 -12 wherein a field lens is disposed in the interconnect region.

15. The optical switch of claim 13 wherein said relay lens is disposed off-axis.

16. The optical switch of claim 14 wherein said field lens is disposed off-axis.

17. The optical switch of any preceding claim wherein said input optical fibre array and said receiver array have respective input and output ports each comprising a respective 32X32 array of ports, and said ports are disposed at normalised coordinate locations defined by:

Input Port Locations (η_i , ξ_i)	Output Port Locations (η_o , ξ_o)
$(-1/60 , -1/12)$	$(+1/60 , -1/12)$
$(-1/30 , -1/12)$	$(+1/30 , -1/12)$
$(-1/20 , -1/12)$	$(+1/20 , -1/12)$
$(-1/60 , -1/15)$	$(+1/60 , -1/15)$
$(-1/30 , -1/15)$	$(+1/30 , -1/15)$
$(-1/20 , -1/15)$	$(+1/20 , -1/15)$
$(-1/60 , -1/20)$	$(+1/60 , -1/20)$
$(-1/30 , -1/20)$	$(+1/30 , -1/20)$
$(-1/20 , -1/20)$	$(+1/20 , -1/20)$
$(-1/60 , -1/30)$	$(+1/60 , -1/30)$
$(-1/30 , -1/30)$	$(+1/30 , -1/30)$
$(-1/20 , -1/30)$	$(+1/20 , -1/30)$
$(-1/60 , -1/60)$	$(+1/60 , -1/60)$
$(-1/30 , -1/60)$	$(+1/30 , -1/60)$
$(-1/20 , -1/60)$	$(+1/20 , -1/60)$

BNSDOCID: <WO 012584842 >

$(-1/60, 0)$	$(+1/60, 0)$
$(-1/30, 0)$	$(+1/30, 0)$
$(-1/20, 0)$	$(+1/20, 0)$
$(-1/60, +1/60)$	$(+1/60, +1/60)$
$(-1/30, +1/60)$	$(+1/30, +1/60)$
$(-1/20, +1/60)$	$(+1/20, +1/60)$
$(-1/60, +1/30)$	$(+1/60, +1/30)$
$(-1/30, +1/30)$	$(+1/30, +1/30)$
$(-1/20, +1/30)$	$(+1/20, +1/30)$
$(-1/60, +1/20)$	$(+1/60, +1/20)$
$(-1/30, +1/20)$	$(+1/30, +1/20)$
$(-1/20, +1/20)$	$(+1/20, +1/20)$
$(-1/60, +1/15)$	$(+1/60, +1/15)$
$(-1/30, +1/15)$	$(+1/30, +1/15)$
$(-1/20, +1/15)$	$(+1/20, +1/15)$
$(-1/60, +1/12)$	$(+1/60, +1/12)$
$(-1/30, +1/12)$	$(+1/30, +1/12)$

18. An optical switch comprising an input optical fibre array and a receiver array, and an optical system connecting the input optical fibre array to the receiver array wherein the optical system comprises a first binary reconfigurable spatial light modulator, a second binary reconfigurable spatial light modulator, each spatial light modulator being adapted for providing a respective selectable set of holograms each for a desired switching operation, and a pair of lenses between said first and second binary reconfigurable spatial light modulators for defining therebetween an interconnect region, wherein each spatial light modulator comprises a display screen, memory circuitry for a plurality of sets of hologram data and selection circuitry for selecting one of said sets according to a desired switching function, each stored set of hologram data being calculated by:

TS0000469

determining principal replay coordinates of a said hologram according to a desired switching function;
using said coordinates:

calculate the size in pixels of a base cell; and

evaluating a base cell pattern by a phase quantisation procedure;

and

replicating said base cell pattern data until the entire aperture of the spatial light modulator is filled.

19. An optical switch comprising an input optical fibre array and a receiver array, and an optical system connecting the input optical fibre array to the receiver array wherein the optical system comprises a first ferroelectric liquid crystal spatial light modulator, a second ferroelectric liquid crystal spatial light modulator, each spatial light modulator being adapted for providing a respective selectable set of holograms each for a desired switching operation, and a pair of lenses between said first and second ferroelectric liquid crystal spatial light modulators for defining therebetween an interconnect region, wherein each spatial light modulator comprises a display screen, memory circuitry for a plurality of sets of hologram data and selection circuitry for selecting one of said sets according to a desired switching function, each stored set of hologram data being calculated by:
determining principal replay coordinates of a said hologram according to a desired switching function;
using said coordinates:

calculate the size in pixels of a base cell; and

evaluating a base cell pattern by a phase quantisation procedure;

RNSDOCID: WO 0125848A2 I >

and

replicating said base cell pattern data until the entire aperture of the spatial light modulator is filled.

20. The optical switch of claim 18 or 19 wherein said step of determining principal replay coordinates of a desired hologram comprises

determining the normalised angular deviation upon a collimated paraxial beam required of a desired hologram;

deriving from said deviation the principal replay mode coordinates for said desired hologram;

21. The optical switch of any of claims 18 - 20 wherein said step of calculating comprises:

converting said coordinates to rational numbers each comprising a numerator and a denominator, wherein said rational numbers are simplified so that said denominators have their lowest integer values, and using said denominators as the number of pixels for said base cell pattern.

22. A method of producing a phase-only computer generated hologram for a pixellated hologram device, having a respective (x,y) plane and a predetermined number of uniformly distributed phase levels, the method comprising:

determining principal replay coordinates of a desired hologram;

using said coordinates:

calculating the size in pixels of a base cell; and

evaluating a base cell pattern by a phase quantisation procedure;

and

replicating said base cell in the plane of the said hologram device until the entire aperture of the device is filled.

23. The method of claim 22 wherein said step of determining principal replay coordinates of a desired hologram comprises
determining the normalised angular deviation upon a collimated paraxial beam required of a desired hologram;
deriving from said deviation the principal replay mode coordinates for said desired hologram;

24. The method of claim 22 or 23 wherein said step of evaluating comprises:
converting said coordinates to rational numbers each comprising a numerator and a denominator, wherein said rational numbers are simplified so that said denominators have their lowest integer values, and using said denominators as the number of pixels for said base cell pattern.

25. The method of any of claims 21-24 and further comprising constraining said numerator and denominator by a predetermined mathematical relationship.

26. The method of claim 25 wherein said mathematical relationship is specified by

$$-\tfrac{1}{2}D_x \le N_x \le \tfrac{1}{2}D_x \quad -\tfrac{1}{2}D_x \le N_y \le \tfrac{1}{2}D_y \qquad 1 \le D_x \le R_x \quad 1 \le D_y \le R_y$$

where N_x, N_y are said numerators and D_x, D_y are said denominators.

BNSDOCID: <WO 0125848A2 I >

TS0000472

27. The method of any of claims 22-26 wherein said evaluating step comprises defining a spatially sampled phase screen using said rational fractions such that

$$\phi(k,l)=k\frac{N_x}{D_x}+l\frac{N_y}{D_y}$$

wherein ϕ is the phase screen, k =0,1,2 ...(D_x-1) and 1= 0,1,2 ...(D_y-1)

28. The method of claim 27 wherein said evaluating step further comprises:
phase-quantising said phase screen to said predetermined number of uniformly distributed phase levels using

$$\varphi_s(k,l)=\exp(2\pi j\times int\{\phi(k,l)\times\psi\}/\psi)$$

where $\varphi_s(k,l)$ is the final sampled and quantised representation of the base-cell pattern for the target hologram device,

j is the complex operator $(-1)^{1/2}$, exp(...)is the exponential operator, and *int*{...} is a quantisation function that rounds its argument to the nearest integer towards minus infinity.

29. The switch of any of claims 18-20 having circuitry for scrolling the hologram pattern across the display device by one or more pixels at a time.

30. A method of operating the switch of any of claims 18-20 comprising scrolling the hologram pattern (in either 1- or 2-dimensions as appropriate) across the

display device by one or more pixels at a time and at regular intervals.

TS0000474

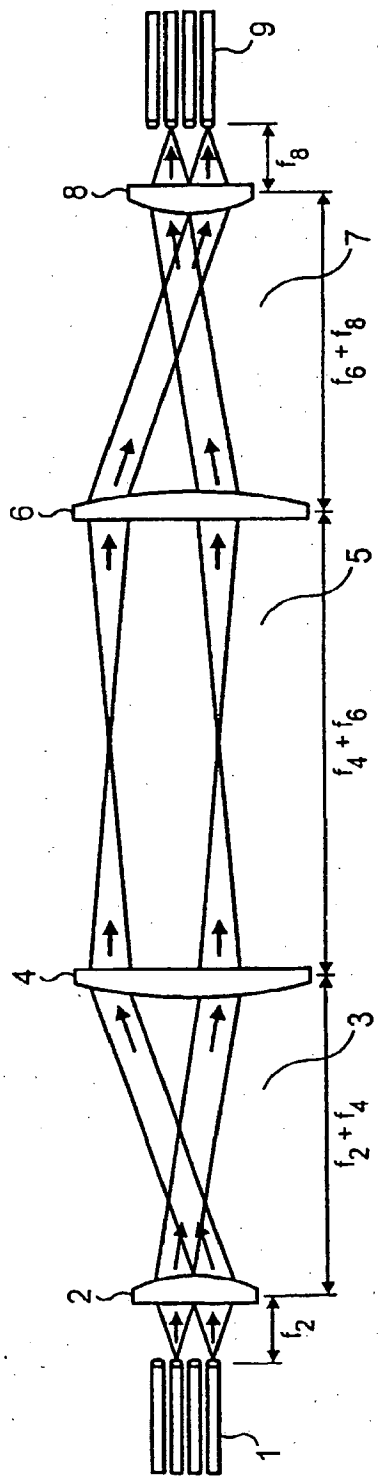
9
8
7
6
5
4
3
2
1
f_8
f_6+f_8
f_4+f_6
f_2+f_4
f_2

FIG. 1

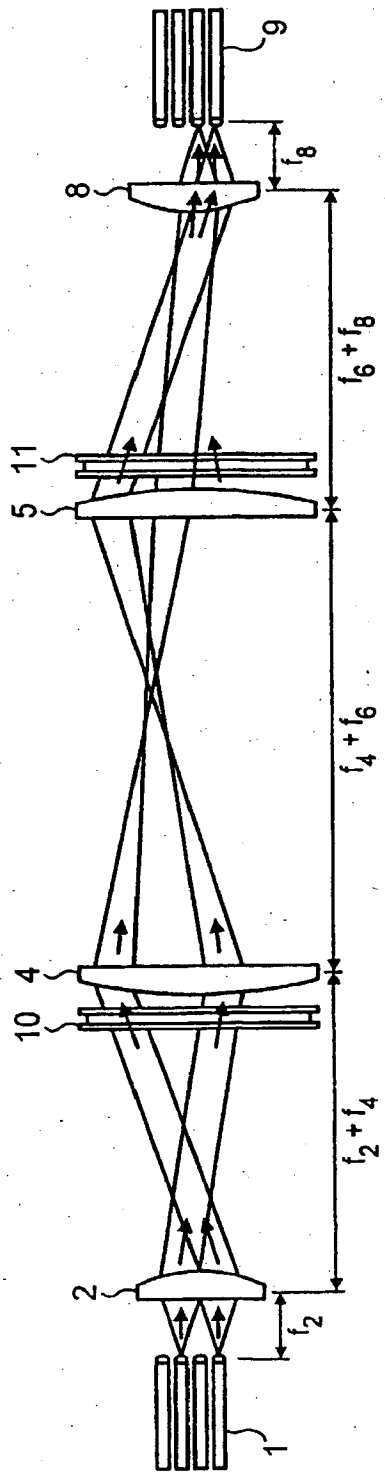
9
8
11
5
4
10
2
1
f_8
f_6+f_8
f_4+f_6
f_2+f_4
f_2

FIG. 2

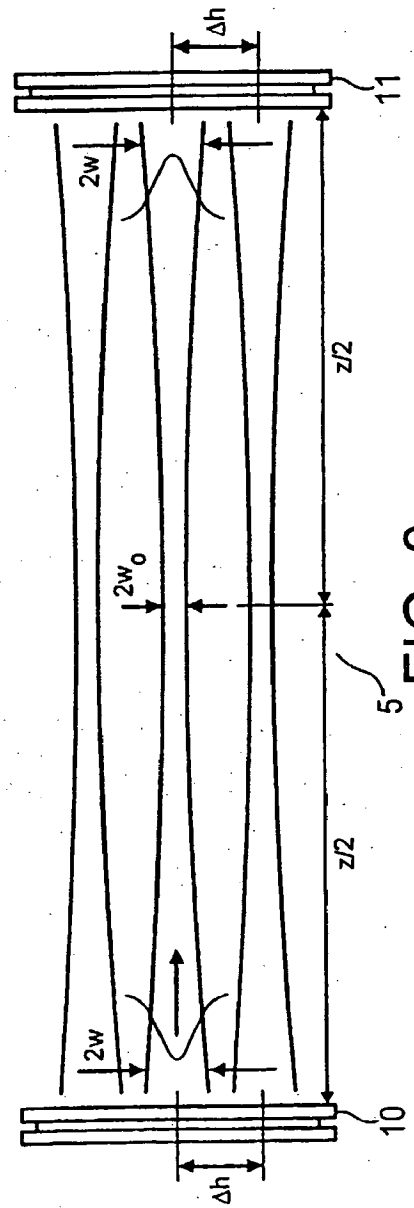

FIG. 3

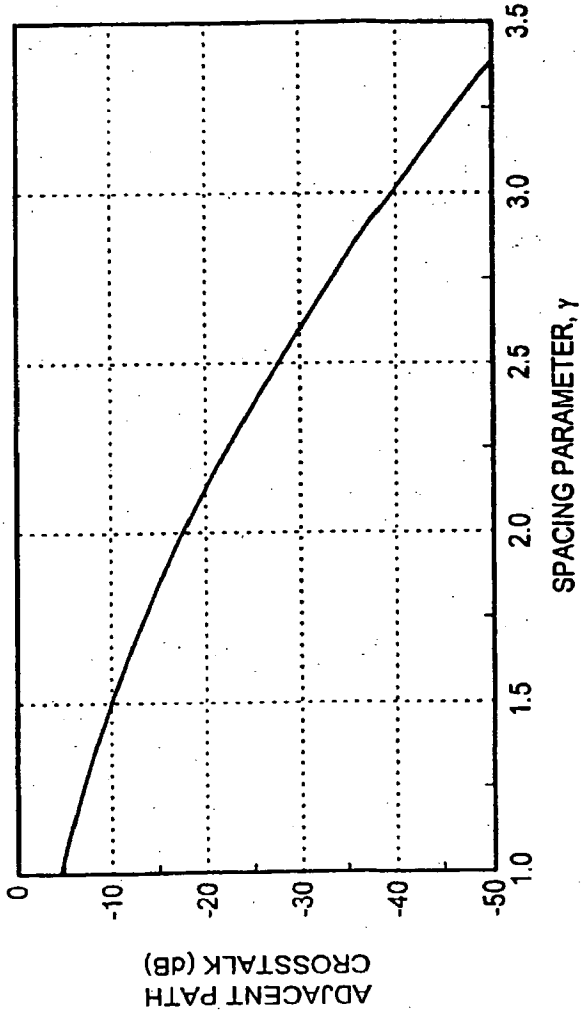

FIG. 4

BNSDOCID: <WO 0125848A2 I >

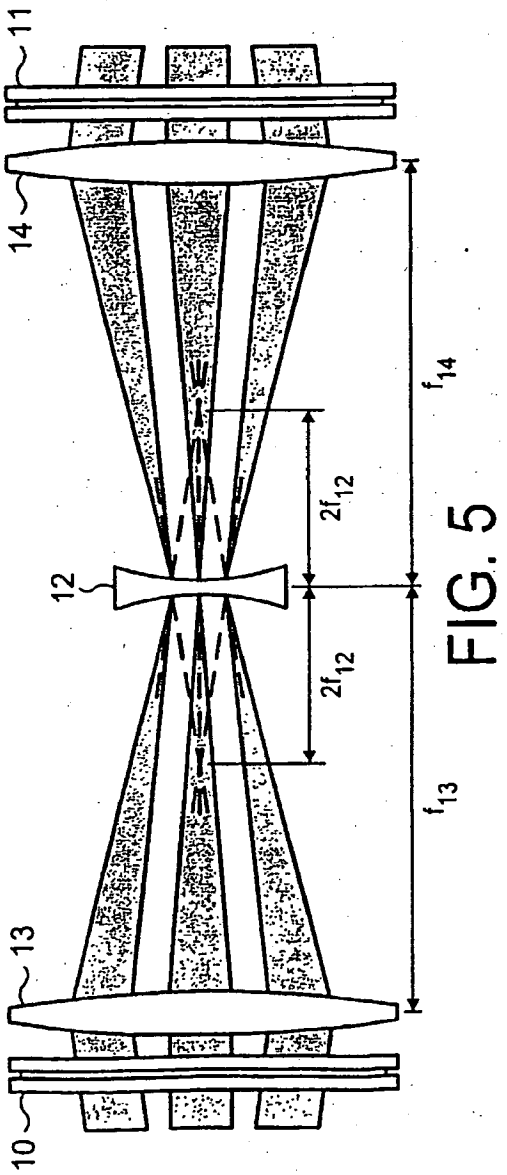

FIG. 5

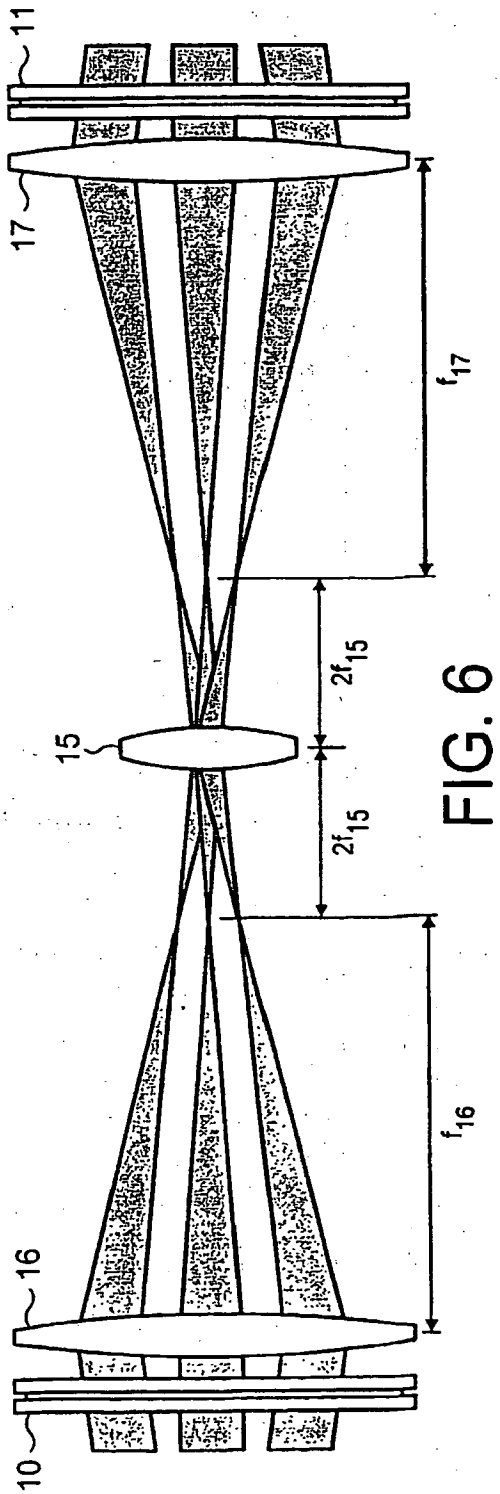

FIG. 6

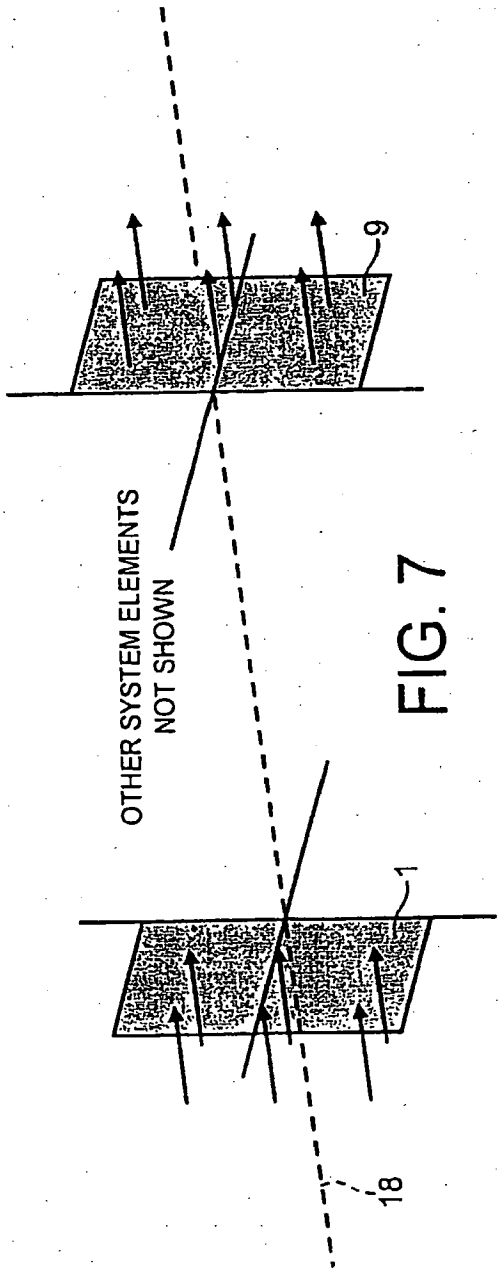

FIG. 7

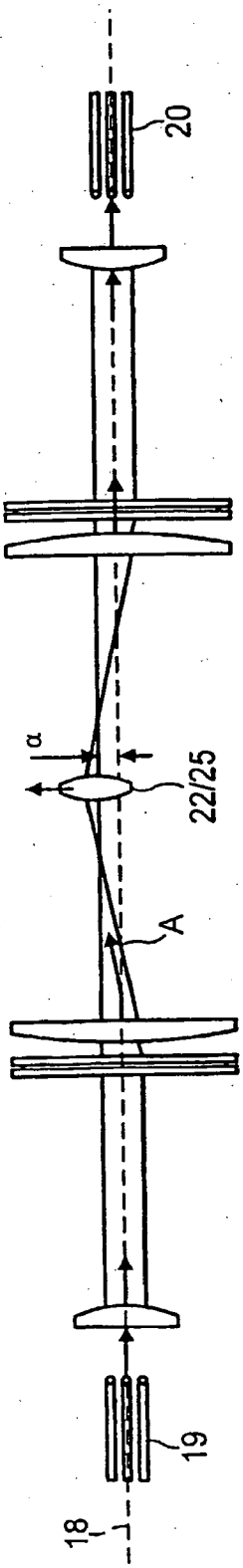

FIG. 8

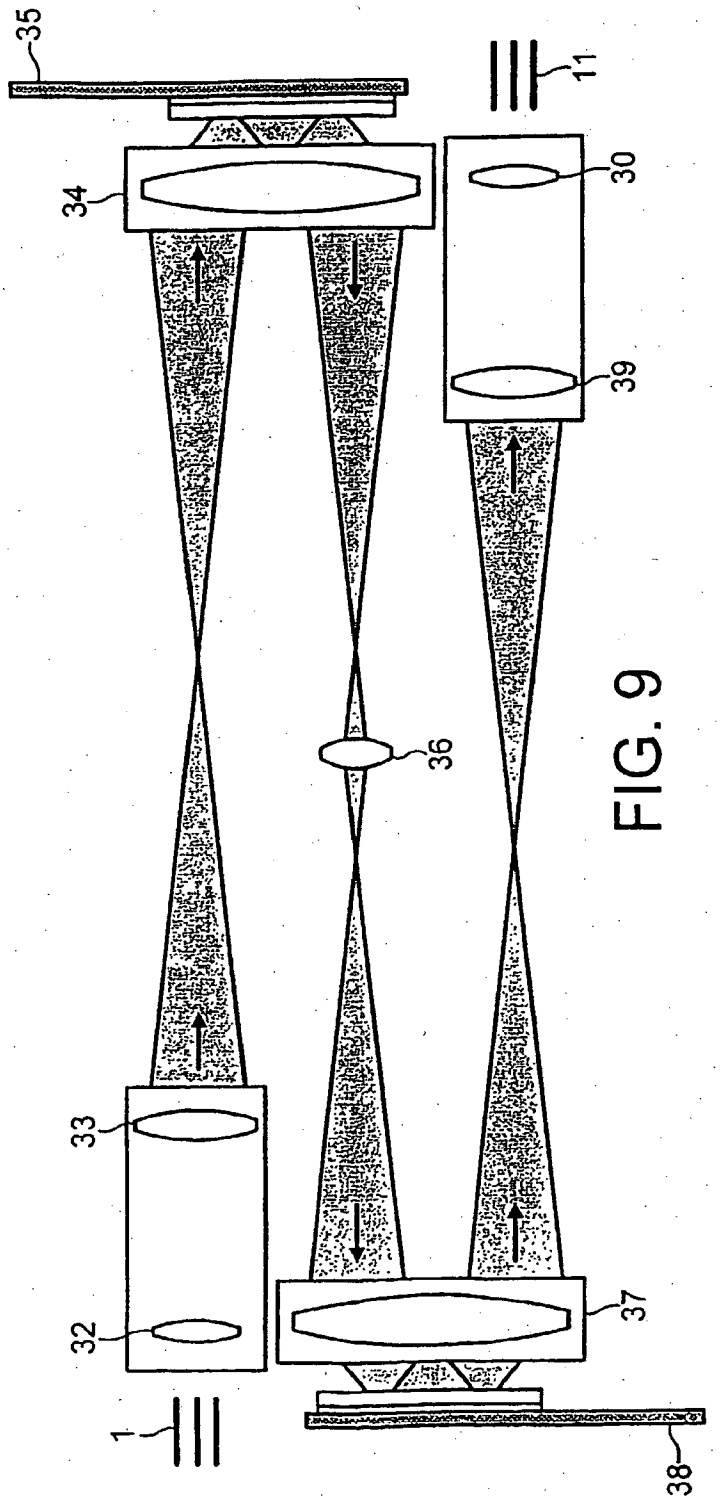

FIG. 9

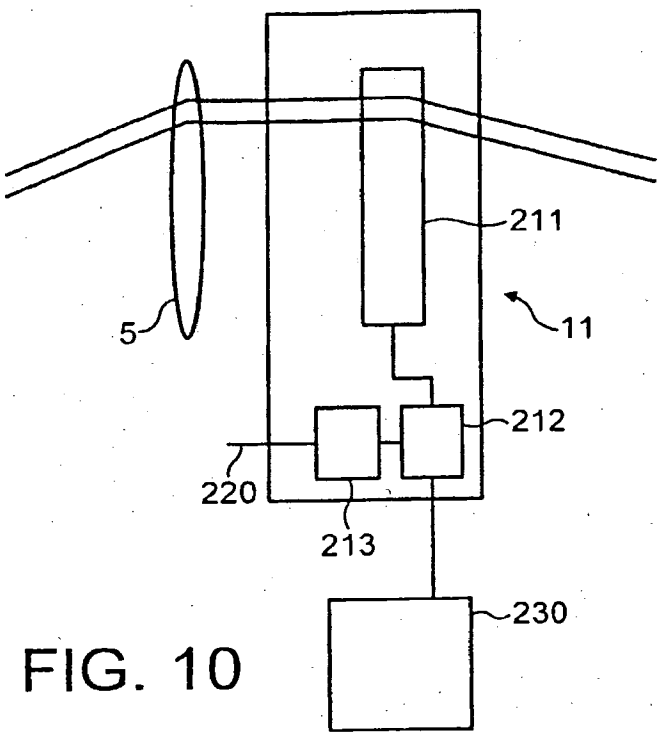

FIG. 10

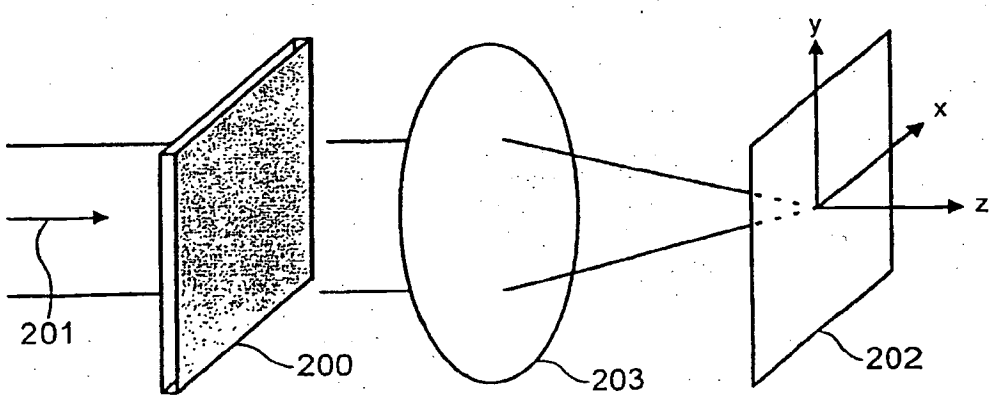

FIG. 11

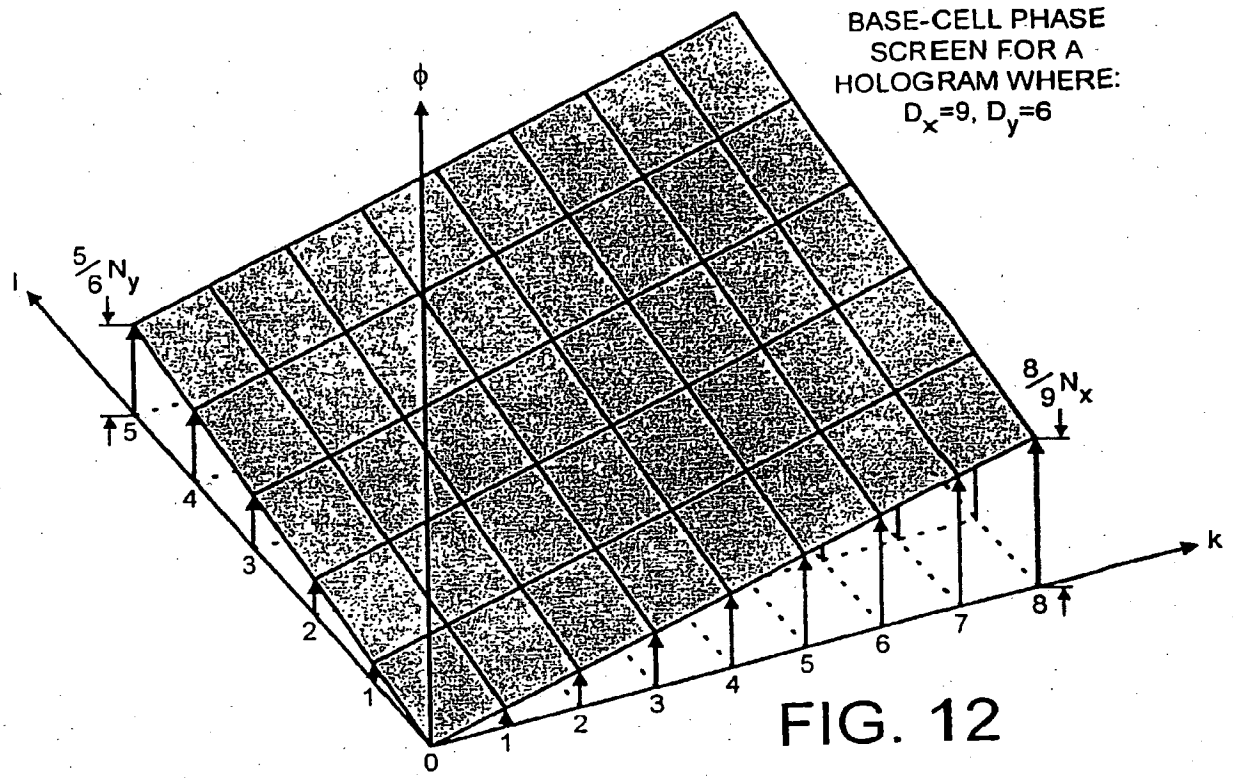
BASE-CELL PHASE SCREEN FOR A HOLOGRAM WHERE: D_x=9, D_y=6
ϕ
l
$\frac{5}{6}N_y$
$\frac{8}{9}N_x$
k
0
1
2
3
4
5
6
7
8

FIG. 12

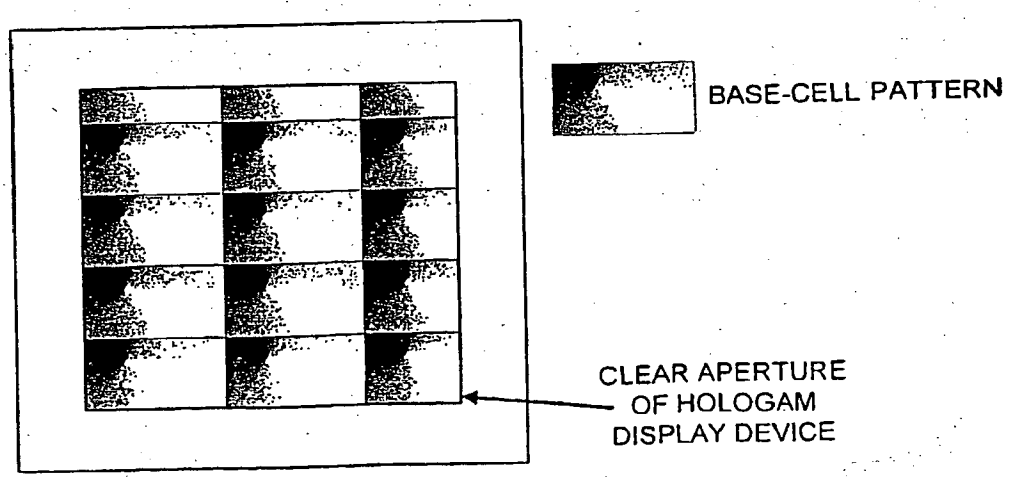
BASE-CELL PATTERN
CLEAR APERTURE OF HOLOGAM DISPLAY DEVICE

FIG. 13

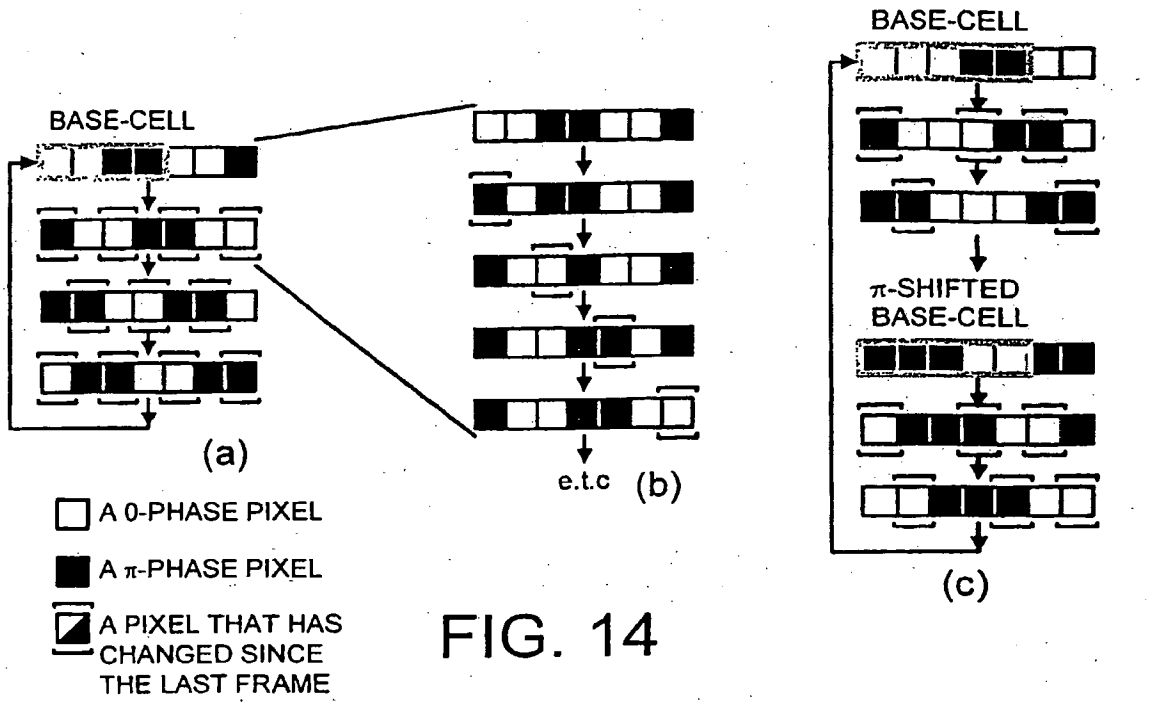

FIG. 14

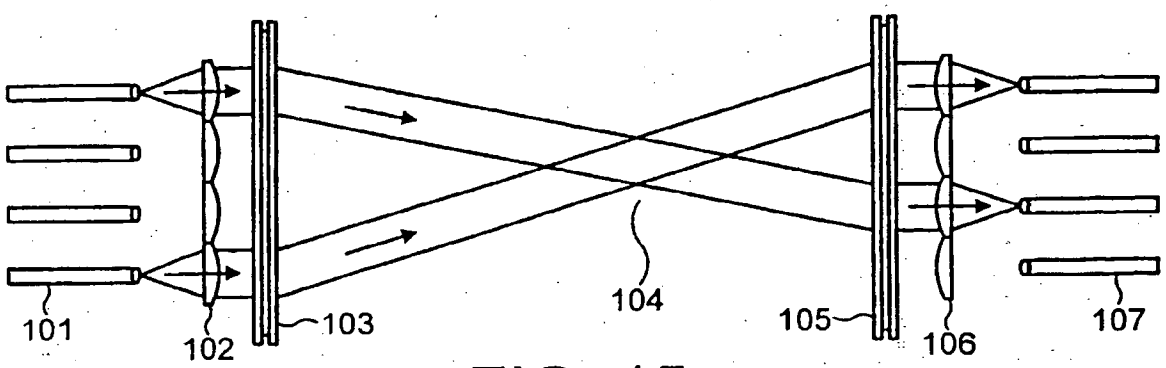

FIG. 15
(PRIOR ART)

(12) INTERNATIONAL APPLICATION PUBLISHED UNDER THE PATENT COOPERATION TREATY (PCT)

(19) World Intellectual Property Organization
International Bureau

(43) International Publication Date
12 April 2001 (12.04.2001)

PCT

(10) International Publication Number
WO 01/25848 A3

(51) International Patent Classification[7]: G02F 1/31, 1/141, 1/1347, G03H 1/08, G02B 5/32

(21) International Application Number: PCT/GB00/03810

(22) International Filing Date: 4 October 2000 (04.10.2000)

(25) Filing Language: English

(26) Publication Language: English

(30) Priority Data:
9923428.8 4 October 1999 (04.10.1999) GB

(71) Applicant *(for all designated States except US)*: **THOMAS SWAN & CO., LTD.** [GB/GB]; Crookhall, Consett, Durham DH8 7ND (GB).

(72) Inventors; and

(75) Inventors/Applicants *(for US only)*: **WARR, Steven** [GB/GB]; 11 Monkley Court, Piggotts Road, Caversham, Reading RG4 8EW (GB). **TAN, Kim, Leong** [MY/US]; Apartment #6, 1178 Curtiss Avenue, San Jose CA 95125 (US). **CROSSLAND, William** [GB/GB]; Odd Spot, 15 School Lane, Harlow, Essex CM20 8QD (GB). **MANOLIS, Ilias** [GR/GR]; Nea Figalia, GR-270 56 Olympias Hleias (GR). **REDMOND, Maura** [GB/GB]; 24 Thornton Road, Girton, Cambridge CB3 0NW (GB). **WILKINSON, Timothy** [NZ/GB]; Jesus College, Cambridge CB5 8BL (GB). **HOLMES, Melanie** [GB/GB]; The Forge, The Street, Brundish, Woodbridge, Suffolk IP13 8BL (GB). **ROBERTSON, Brian** [GB/GB]; c/o Raymond Robertson, 75 Poplar Avenue, Hove, East Sussex BN3 8PT (GB).

(74) Agents: **NEOBARD, William, John** et al.; W. H. Beck, Greener & Co., 7 Stone Buildings, London WC2A 3SZ (GB).

(81) Designated States *(national)*: AE, AG, AL, AM, AT, AU, AZ, BA, BB, BG, BR, BY, BZ, CA, CH, CN, CR, CU, CZ, DE, DK, DM, DZ, EE, ES, FI, GB, GD, GE, GH, GM, HR, HU, ID, IL, IN, IS, JP, KE, KG, KP, KR, KZ, LC, LK, LR, LS, LT, LU, LV, MA, MD, MG, MK, MN, MW, MX, MZ, NO, NZ, PL, PT, RO, RU, SD, SE, SG, SI, SK, SL, TJ, TM, TR, TT, TZ, UA, UG, US, UZ, VN, YU, ZA, ZW.

(84) Designated States *(regional)*: ARIPO patent (GH, GM, KE, LS, MW, MZ, SD, SL, SZ, TZ, UG, ZW), Eurasian patent (AM, AZ, BY, KG, KZ, MD, RU, TJ, TM), European patent (AT, BE, CH, CY, DE, DK, ES, FI, FR, GB, GR, IE, IT, LU, MC, NL, PT, SE), OAPI patent (BF, BJ, CF, CG, CI, CM, GA, GN, GW, ML, MR, NE, SN, TD, TG).

Published:
— *with international search report*

(88) Date of publication of the international search report:
31 January 2002

For two-letter codes and other abbreviations, refer to the "Guidance Notes on Codes and Abbreviations" appearing at the beginning of each regular issue of the PCT Gazette.

(54) Title: OPTICAL SWITCHING WITH FERROELECTRIC LIQUID CRYSTAL SLMS

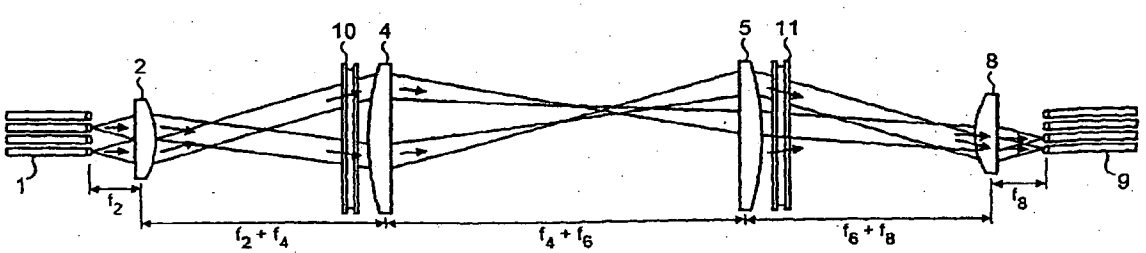

(57) Abstract: An optical switch uses two ferroelectric liquid crystal spatial light modulators (10, 11) with an interconnect region in between. The switch uses bulk lenses (2, 8) to focus light from an input fibre array (1) to a first spatial light modulator (10), and from the second spatial light modulator (11) to an output array (9). Each spatial light modulator displays a respective hologram selected from a previously calculated set, to cause a desired switching of light from the input fibre array to the output array.

WO 01/25848 A3

INTERNATIONAL SEARCH REPORT

International Application No
PCT/GB 00/03810

A. CLASSIFICATION OF SUBJECT MATTER
IPC 7 G02F1/31 G02F1/141 G02F1/1347 G03H1/08 G02B5/32

According to International Patent Classification (IPC) or to both national classification and IPC

B. FIELDS SEARCHED

Minimum documentation searched (classification system followed by classification symbols)
IPC 7 G02F G03H

Documentation searched other than minimum documentation to the extent that such documents are included in the fields searched

Electronic data base consulted during the international search (name of data base and, where practical, search terms used)
WPI Data, PAJ, IBM-TDB, EPO-Internal, INSPEC, COMPENDEX

C. DOCUMENTS CONSIDERED TO BE RELEVANT

Category °	Citation of document, with indication, where appropriate, of the relevant passages	Relevant to claim No.
A	US 5 930 012 A (MEARS ROBERT JOSEPH ET AL) 27 July 1999 (1999-07-27) column 1, line 55 -column 2, line 48 column 3, line 60 -column 5, line 52; claims 1,3,5; figures 3,4 ---	1-5,9-12
A	PATENT ABSTRACTS OF JAPAN vol. 018, no. 241 (P-1733), 9 May 1994 (1994-05-09) & JP 06 027501 A (OKI ELECTRIC IND CO LTD), 4 February 1994 (1994-02-04) abstract; figures 1-7 --- -/--	1,4,6

[X] Further documents are listed in the continuation of box C.

[X] Patent family members are listed in annex.

° Special categories of cited documents :

"A" document defining the general state of the art which is not considered to be of particular relevance

"E" earlier document but published on or after the international filing date

"L" document which may throw doubts on priority claim(s) or which is cited to establish the publication date of another citation or other special reason (as specified)

"O" document referring to an oral disclosure, use, exhibition or other means

"P" document published prior to the international filing date but later than the priority date claimed

"T" later document published after the international filing date or priority date and not in conflict with the application but cited to understand the principle or theory underlying the invention

"X" document of particular relevance; the claimed invention cannot be considered novel or cannot be considered to involve an inventive step when the document is taken alone

"Y" document of particular relevance; the claimed invention cannot be considered to involve an inventive step when the document is combined with one or more other such documents, such combination being obvious to a person skilled in the art.

"&" document member of the same patent family

Date of the actual completion of the international search	Date of mailing of the international search report
13 June 2001	06 07 2001

Name and mailing address of the ISA	Authorized officer
European Patent Office, P.B. 5818 Patentlaan 2 NL - 2280 HV Rijswijk Tel. (+31-70) 340-2040, Tx. 31 651 epo nl, Fax: (+31-70) 340-3016	Krametz, E

Form PCT/ISA/210 (second sheet) (July 1992)

TS0000484

INTERNATIONAL SEARCH REPORT

Intern. nal Application No
PCT/GB 00/03810

C.(Continuation) DOCUMENTS CONSIDERED TO BE RELEVANT

Category °	Citation of document, with indication, where appropriate, of the relevant passages	Relevant to claim No.
A	O'BRIEN D C ET AL: "A HOLOGRAPHICALLY ROUTED OPTICAL CROSSBAR: THEORY AND SIMULATION" OPTICAL COMPUTING AND PROCESSING,GB,TAYLOR AND FRANCIS, LONDON, vol. 1, no. 3, 1 July 1991 (1991-07-01), pages 233-243, XP000243218 ISSN: 0954-2264 * sections 1 - 5 * figures 1-4 ---	1-17
A	R.J.MEARS ET AL.: "TELECOMMUNICATIONS APPLICATIONS OF FERROELECTRIC LIQUID-CRYSTAL SMART PIXELS" IEEE JOURNAL OF SELECTED TOPICS IN QUANTUM ELECTRONICS, vol. 2, no. 1, April 1996 (1996-04), pages 35-46, XP002155684 * section 5 * ---	1,10
A	US 5 539 543 A (LIU HUA-KUANG ET AL) 23 July 1996 (1996-07-23) column 2, line 7 - line 53 column 3, line 44 -column 4, line 42 claims -----	18,19,22

INTERNATIONAL SEARCH REPORT

International application No.
PCT/GB 00/03810

Box I Observations where certain claims were found unsearchable (Continuation of item 1 of first sheet)

This International Search Report has not been established in respect of certain claims under Article 17(2)(a) for the following reasons:

1. ☐ Claims Nos.:
because they relate to subject matter not required to be searched by this Authority, namely:

2. ☐ Claims Nos.:
because they relate to parts of the International Application that do not comply with the prescribed requirements to such an extent that no meaningful International Search can be carried out, specifically:

3. ☐ Claims Nos.:
because they are dependent claims and are not drafted in accordance with the second and third sentences of Rule 6.4(a).

Box II Observations where unity of invention is lacking (Continuation of item 2 of first sheet)

This International Searching Authority found multiple inventions in this international application, as follows:

see additional sheet

1. ☒ As all required additional search fees were timely paid by the applicant, this International Search Report covers all searchable claims.

2. ☐ As all searchable claims could be searched without effort justifying an additional fee, this Authority did not invite payment of any additional fee.

3. ☐ As only some of the required additional search fees were timely paid by the applicant, this International Search Report covers only those claims for which fees were paid, specifically claims Nos.:

4. ☐ No required additional search fees were timely paid by the applicant. Consequently, this International Search Report is restricted to the invention first mentioned in the claims; it is covered by claims Nos.:

Remark on Protest

☐ The additional search fees were accompanied by the applicant's protest.

☒ No protest accompanied the payment of additional search fees.

TS0000486

FURTHER INFORMATION CONTINUED FROM PCT/ISA/ 210

This International Searching Authority found multiple (groups of) inventions in this international application, as follows:

1. Claims: 1-17

An optical switch comprising input and output fiber arrays and first and second ferroelectric liquid crystal spatial light modulators both providing a selectable set of holograms; this optical switch being characterised by first and second bulk lenses disposed between fiber arrays and spatial light modulators

2. Claims: 18 - 30

A method of producing a phase-only computer generated hologram for a pixellated hologram device.

INTERNATIONAL SEARCH REPORT

Information on patent family members

Intern. nal Application No
PCT/GB 00/03810

Patent document cited in search report	Publication date	Patent family member(s)	Publication date
US 5930012 A	27-07-1999	AU 3573195 A	26-04-1996
		AU 3573295 A	26-04-1996
		DE 69515889 D	27-04-2000
		DE 69515889 T	07-12-2000
		EP 0783713 A	16-07-1997
		EP 0783724 A	16-07-1997
		WO 9610762 A	11-04-1996
		WO 9610776 A	11-04-1996
		US 6141361 A	31-10-2000
JP 06027501 A	04-02-1994	NONE	
US 5539543 A	23-07-1996	NONE	

TS0000488

(12) INTERNATIONAL APPLICATION PUBLISHED UNDER THE PATENT COOPERATION TREATY (PCT)

(19) World Intellectual Property Organization
International Bureau

(43) International Publication Date
19 December 2002 (19.12.2002)

PCT

(10) International Publication Number
WO 02/101451 A1

(51) International Patent Classification[7]: G02F 1/313, G02B 6/34, 26/08, 5/18

(21) International Application Number: PCT/US02/18255

(22) International Filing Date: 6 June 2002 (06.06.2002)

(25) Filing Language: English

(26) Publication Language: English

(30) Priority Data:
09/877,323 8 June 2001 (08.06.2001) US

(71) Applicant: HONEYWELL INTERNATIONAL INC. [US/US]; 101 Columbia Road, P.O. Box 2245, Morristown, NJ 07962 (US).

(72) Inventors: HOCKER, Benjamin, G.; 5730 Covington Circle, Minnetonka, MN 55345 (US). PLOWMAN, Thomas, E.; 4001 Weston Parkway, Cary, NC 27513 (US). SINCLAIR, Michael, B.; 9605 Mendoza Ave. N.E., Albuquerque NM 87109 (US). BUTLER, Michael, A.; 13007 Cedarbrool N.E., Albuquerque NM 87111 (US). DEUTSCH, Erik, R.; 143 Albany Street, 213-B, Cambridge, MA 02139 (US). SENTURIA, Stephen, D.; 98 Crowninshield Road, Brookline, MA 02146 (US). YOUNGNER, Daniel, W.; 8836 Queensland Lane, Maple Grove MN 55311 (US).

(74) Agents: CRISS, Roger, H., Esq. et al.; Honeywell International Inc., 101 Columbia Avenue, P.O. Box 2245, Morristown, NJ 07960 (US).

(81) Designated States *(national)*: CA, JP.

(84) Designated States *(regional)*: European patent (AT, BE, CH, CY, DE, DK, ES, FI, FR, GB, GR, IE, IT, LU, MC, NL, PT, SE, TR).

Published:
— *with international search report*
— *before the expiration of the time limit for amending the claims and to be republished in the event of receipt of amendments*

For two-letter codes and other abbreviations, refer to the "Guidance Notes on Codes and Abbreviations" appearing at the beginning of each regular issue of the PCT Gazette.

(54) Title: APPARATUS AND METHOD FOR PROCESSING LIGHT

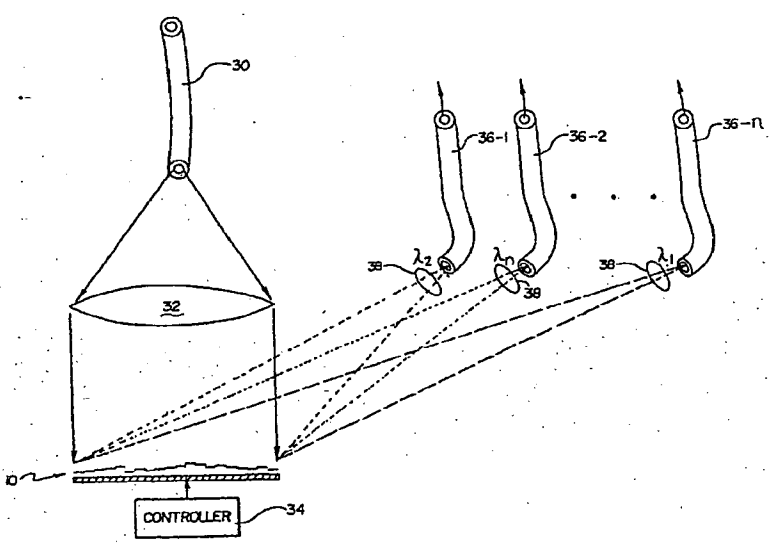

(57) Abstract: Optical processing apparatus for processing a stream of light. The apparatus includes a light input emitted, for example, by fiber optic cable (30). Multiple wavelength bands of light are, typically, emitted and transmitted in a direction parallel to an axis. The apparatus also includes a plurality of receptors (36-1, ..., 36-n) which are positioned at defined locations spaced from one another. A diffracting member (10) is employed to diffract the wavelength bands of light transmitted parallel to the axis. In one embodiment of the invention, the diffracting member is a controllable diffraction grating. The wavelength bands are selectively diffracted to various of the receptors. The apparatus further includes a controller (34) for selectively adjusting the diffracting member to independently vary a particular receptor to which any one wavelength band is diffracted.

WO 02/101451 A1

BNSDOCID: <WO 02101451A1 >

AO

TS0000489

APPARATUS AND METHOD FOR PROCESSING LIGHT

Statement Regarding Federally Sponsored Research or Development

This invention was made with Government support under Contract No. N66001-97-C-8620 awarded by the Defense Advanced Research Projects Agency, and under Contract No. DE-AC04-94AL85000 awarded by the U.S. Department of Energy. The Government has certain rights in the invention.

Technical Field

The present invention relates broadly to the processing of light. More specifically, however, it deals with directing a multiplicity of individual streams of light, each having a different wavelength band, to one or more distinct outputs or receptors. It enables the direction of each of the wavelength bands to be changed in order to direct the bands to different output locations, as desired. An apparatus and method in accordance with the invention are particularly useful for controlling transmission of light with regard to optical communication systems and, more particularly, for being used in a programmable wavelength selective switch.

Background of the Invention

In general, optical communication systems involve the encoding of information on beams of light and the transmission of this light through thin transparent optical fibers and other optical components. Fiber optic communications provides advantages over conventional electrical communications over copper communications wire. For instance, optical fibers are not sensitive to electrical noise because light signals rather than electrical signals are transmitted through the optical fiber. In addition, because the frequency of the light used in optical communications is much greater than the frequency of electrical signals used in conventional copper wire, the communications rate for optical communications systems can be much greater than the communications rate of copper wire communications systems.

Although the communication rate for fiber optic systems already is high, the demand for ever higher rates is continually increasing, as is the demand for an ability to selectively direct and switch light signals. Wavelength Division Multiplexing (WDM) has been developed in an attempt to support such increased demand. With WDM, several wavelength bands of light, following common paths through optical fibers and other components, may be utilized at the same time with each band carrying different information. For instance, a light beam may comprise four light

streams, each having a different wavelength band (for example, wavelength bands around 1.5510, 1.5520, 1.5530, and 1.5540 micrometers). The four streams may all be sent along a single path through an optical fiber, with each stream carrying different information. Thus, a single optical fiber can be used to transmit four times the information, as compared to a fiber used for a single light stream comprised of a single wavelength band.

Because each light stream can be modulated to carry information at a very high rate, for example, at 10 Gbits/second, a WDM transmission having four light streams of four distinct wavelength bands, transmitted simultaneously, would yield data rates of approximately four times greater, or about 40 Gbits/second, through a single optical fiber.

In optical communication systems and elsewhere, it is desirable to separate, redirect, and combine separate light beams. As is well known to those skilled in the art of optics, it is possible to separate, redirect and combine light beams, for example, by use of mirrors and lenses. Mirrors can be miniaturized and their positions switched and controlled to allow the desired control of the directions of light beams. However, this technique controls the entire light beam in the same fashion, and cannot individually and separately control the

individual light streams of different wavelength bands which comprise the light beam. In order to further separate the individual light streams of different wavelength bands within the light beam, well-known optical devices such as wavelength-selective filters, prisms, and conventional diffraction gratings can be used. A limitation of these devices is that different wavelengths of light are processed in a fixed manner and in a way that cannot be flexibly or selectively controlled. For example, it is well-known that a conventional diffraction grating diffracts light in a defined and fixed angular relationship, with shorter wavelengths being directed at a smaller angle relative to the input beam, and longer wavelengths directed at larger angles. This angular relationship is fixed and thereby limits its usefulness in directing light streams with different wavelength bands. That is, a diffraction grating cannot be varied or switched to rearrange this angular relationship between two light streams with different ranges of wavelength. It cannot be switched to reverse the angular directions of the two streams or to direct both light streams having different wavelength bands in the same direction.

Technology has been described recently for controllable or programmable diffraction grating devices. A controllable diffraction grating may employ an electrostatic system for use in

moving a diffraction grating element. Typically, such devices include an array of grating elements that are able to be individually displaced in at least one direction to collectively control the diffraction of a stream of light relative to the grating device. Generally, a grating element is constructed such that at least a portion of the element is made of a resilient material. A reflective coating is applied to one side of the element to diffract the light stream.

The element also includes a conductive or magnetic material to thereby allow an electronic or magnetic force to be applied in order to flex the element. When the individual elements are flexed in certain manners, the diffraction of the light stream with respect to the array of elements is changed. The change in angle of diffraction thereby alters the direction in which the light stream is directed.

U.S. Patent No. 5,905,571 to Butler et al. discloses an optical apparatus for forming correlation spectrometers and optical processors. It teaches a diffractive optical element formed on a substrate comprising a plurality of controllable grating elements with a varying height of adjacent grating elements, and a modulation means to switch between two grating states in order to obtain two different correlations with the incident light beam. This diffractive optical element is used

for correlation spectroscopy. A single input light beam is diffracted in a specified single output direction in order to perform an optical correlation function. In this teaching, a single specific angular direction θ is selected for the diffractive light with respect to the incident light, and the apparatus used to alter the intensities of different wavelengths that are diffracted at that angle θ. This patent is hereby incorporated by reference.

U.S. Patent No. 5,677,783 to Bloom et al. describes a deformable grating apparatus for modulating a light beam. It teaches modulating the intensity of an input ray of light of a determinable wavelength diffracted into a viewing cone, for use as an optical display.

None of these devices has been utilized to separate and selectively direct multiple input wavelength ranges from a single input beam to multiple output locations. None of these devices has been utilized to separate and selectively direct multiple input wavelength ranges from multiple input beams to a single output location, nor to multiple output locations.

There exist, therefore, additional unmet needs for methods and apparatus for processing light in useful ways. The prior art defines needs to selectively control the directions of individual light streams of different wavelength bands. There are needs to

direct individual light streams of different wavelength bands from one or more sources to outputs, and to selectively switch between different sets of directions.

The present invention considers these problems and dictates and addresses the needs of the prior art. The present invention is an apparatus for processing a band of light to achieve the solution of problems and accomplishment of goals necessitated by the prior art.

Summary of the Invention

It is an object of the present invention to separate and selectively direct each of multiple input wavelength bands of a light beam to an intended output. Another object of the invention is the selected switching of an output receptor to which a defined wavelength band is directed. Such switching is accomplished for one wavelength band independently of other wavelength bands.

It is another object of the invention to direct different input wavelength bands, selectively, to a common output. It is a further object of the present invention to enable the division and direction of a single wavelength band to multiple outputs. It is a further object of the present invention to selectively direct each of multiple input wavelength bands of multiple input light beams to intended outputs.

To achieve these objects, the present invention is an

apparatus and method for processing light. A beam of light is transmitted along an axis from a source. The beam of light contains individual light streams, each having a different wavelength band. Such a light stream within a wavelength band may contain a signal carrying information. The apparatus also includes a plurality of receptors which are positioned at defined locations. A diffracting member is provided to diffract the wavelength bands of light transmitted from the source. The diffracting member effects diffraction of the wavelength bands to one or more of the receptors. A controller is provided to enable selective adjustment of the member to accomplish diffraction of a selected wavelength band independent of other wavelength bands. The controller thereby acts to direct a signal contained within one or more selected wavelength bands to be directed to one or more recipients. For example, a signal may comprise information such as voice or data and may be communicated within one wavelength band.

The apparatus can comprise at least one fiber optic emitter. Further, the diffracting member can include multiple grating elements which operate to diffract at least one output stream of light having a wavelength band and carrying a signal and to direct that signal toward a predetermined receptor.

A diffractive member for use in accordance with the present invention may comprise a plurality of grating elements for

TS0000497

diffracting incoming light, a support to which the grating elements are mounted, and means for selectively adjusting the grating elements. The elements may be optically reflective or transmissive. The adjustment changes the reflective phase of the light reflected from, or transmitted through, each element, thereby controlling the direction in which each wavelength band of light is individually and selectively directed to a predetermined receptor.

The invention includes a method for directing a particular wavelength band or multiple wavelength bands of incoming light. The method includes a step of providing a controllable diffraction grating which includes a plurality of diffraction grating elements. The adjustments of the diffraction grating elements necessary to direct a predetermined wavelength band of the incoming light to a predetermined output receptor are ascertained. Such adjustments may be, for example, adjustments of the position of each element. An array or group of diffraction grating elements are positioned at the ascertained positions and work together to effect diffraction of the predetermined wavelength band of light to a predetermined output receptor.

The invention may be designed to work with a plurality of input wavelength bands. Steps, as indicated hereinafter, may be added as desired. For a diffracting grating utilizing reflective elements, the positions of the grating elements that are necessary

TS0000498

to direct a first predetermined wavelength band to a first predetermined output receptor and each additional predetermined wavelength band to a specified output receptor are ascertained. The diffraction grating elements are positioned at the ascertained positions to diffract each of the input wavelength bands of light to the specified set of output receptors.

This embodiment may also be utilized to switch the directions of output signals so that the signals are independently transmitted to the same receptor or to different output receptors. The method can include additional steps to facilitate these functions. For the first disposition of the switch, the apparatus ascertains the first set of positions of the grating elements that are necessary to direct the input wavelength bands to a first specified set of output receptors. For the second disposition of the switch, the apparatus ascertains the second set of positions of the grating elements that are necessary to direct the input wavelength bands to the second desired set of output receptors. Thus by switching the grating elements between the two ascertained sets of positions, the input wavelength bands are switched between the two sets of output receptors.

In addition to the case where there is a single input beam of light containing multiple wavelength bands, the apparatus of this invention may be employed to direct and to switch input wavelength

TS0000499

bands in multiple input beams from multiple separate emitters.

The present invention is thus an improved apparatus and method for solving problems and addressing dictates of the prior art. The benefits discussed above and other benefits will become apparent from the following description by reference to the accompanying drawings.

Brief Description of the Drawings

Figure 1 is a plan view of a controllable diffraction grating suitable for use with one embodiment of the apparatus and method of the present invention;

Figures 2a and 2b illustrate the vertical translation of grating elements in a controllable diffraction grating which can be utilized in accordance with the present invention;

Figure 3 is a schematic diagram illustrating operation of apparatus in accordance with the present invention in which an input light beam is separated into a plurality of optical individual streams of light, each having a different wavelength band, which are then directed to separate optical output fibers;

Figure 4 is a schematic diagram of the embodiment shown in Figure 3 with the output optical signals carried on individual light streams, each having a different wavelength band, switched to a different combination of optical output

TS0000500

fibers;

Figure 5 is a schematic diagram illustrating an operation in which one of the optical output signals is directed to multiple optical output fibers, and in which multiple optical signals are combined and directed to one optical output fiber;

Figure 6 is a schematic diagram illustrating an operation of apparatus in accordance with the present invention in which multiple optical input signals are redirected and provided to multiple optical output fibers;

Figure 7 is a schematic diagram illustrating an operation of apparatus in accordance with the present invention in which multiple optical signals are provided to one optical output fiber;

Figure 8 is a functional schematic illustration of a diffracting member in the form of a controllable diffraction grating employing reflective grating elements to effect diffraction of an incoming light stream; and

Figure 9 is a functional schematic illustration of a diffracting member in the form of a controllable diffraction grating employing transmissive grating elements to effect diffraction of an incoming light stream.

TS0000501

Detailed Description of the Invention

The present invention is an apparatus and method for processing light. The apparatus functions to distribute and direct one or more optical signals, having different wavelength bands, emanating from one or more optical inputs, such as input fiber 30 as seen in Figure 3, to one or more optical outputs positioned at defined locations. The optical signals can be distributed and directed to the desired output locations independently of one another. The pattern of distribution of these signals can be volitionally selected and can be switched and rearranged from one distribution pattern to another. In effecting such switching, each optical signal can be redirected independently of the other signals.

As will be discussed hereinafter with reference to a specific embodiment of the invention, positions of the grating elements 14 of Figures 1, 2a and 2b within a controllable diffracting grating 10 can be varied in a direction generally perpendicular to a plane defined by a coplanar configuration of elements 14. Such positional adjustment functions to effect an optical phase shift (or, less ideally, regulation of amplitude) of the light emanating from the optical input or inputs. Control of these processes is achieved by use of a controller 34 as in Figure 3. As will be discussed hereinafter, grating elements 14 can be either reflective

BNSDOCID: <WO_02101451A1_I_>

or transmissive. In either case, phase shift or amplitude regulation is controlled by the controller 34. Again, such adjustments can accomplish individual control of the various wavelength bands of the light stream.

The set of phase shifts for each of the grating elements 14 which are required to generate any desired distribution pattern can be calculated. A variety of diffraction models can be employed for this purpose. The most simple model, and one which applies when the width of the individual grating elements is larger than the wavelength being focused upon, is Fraunhoffer diffraction. In this model, the diffraction from the array of grating elements 14 is determined by the Fourier transform of the phase profile imposed upon an incident optical wavelength band by the grating array. Thus, the problem of designing the phase profile is equivalent to finding a profile whose Fourier transform exhibits the appropriate spatial and spectral properties. This type of calculation is known as a "phase retrieval" problem.

For a very simple switching application consisting of one input direction, one wavelength, and one output direction, the phase profile produced by the array need only contain a single spatial frequency. More complicated switching applications consisting of multiple input wavelengths and multiple output directions require the phase profile to contain a large number of

BNISDOCID: <WO 02101451A1 >

spatial frequencies. In such a case, there are a number of phase retrieval algorithms such as Iterative Fast-Fourier Transform (IFFT), simulated annealing, and genetic algorithms, that can be employed to determine the appropriate deflection profile.

In the Fraunhoffer diffraction regime, Fourier transforms and inverse Fourier transforms are used to move back and forth between x-space (defined as the positional space measure along the grating array) and u-space, where u is defined by the formula:

$$u = \frac{\sin \Theta}{\lambda}$$

where θ is the outgoing diffraction angle, λ is the wavelength under consideration and normal incidence has been assumed for the incoming radiation. For optical switching, one must direct a series of input wavelengths (λ_i) into a sequence of predefined output ports that are located at different diffraction angles (θ_j). Thus, one must design the x-space phase profile $\varphi(x)$ to diffract the desired fraction of the incident optical energy into each of a set of u-space points given by the formula:

$$u_{i,j} = \frac{\sin \Theta_j}{\lambda_i}$$

The desired intensity distribution into the set of u-space points defines a desired u-space spectrum. The IFFT algorithm begins by taking the square-root of the u-space spectrum to obtain the u-

BNSDOCID: <WO 02101451A1 I >

space amplitude profile. The u-space amplitude profile is combined with an arbitrary phase profile in order to obtain a complex u-space profile. This profile is Fourier transformed to x-space, yielding a complex x-space profile. The amplitude of the x-space profile is replaced by a profile that represents the known input intensity profile, while the phase of the x-space profile is retained. The x-space profile is then transformed back to u-space, where the amplitude is replaced by the desired u-space amplitude and, once again, the phase is retained. This procedure is repeated until the u-space amplitude profile obtained by transforming the x-space profile converges on the desired u-space amplitude. At this point, the x-space phase profile is the phase profile that should be produced by the grating array.

As previously mentioned, the grating elements 14 can be either reflective or transmissive. Figures 8 and 9, respectively, schematically illustrate these two types of diffraction. Figure 8 illustrates a series of grating elements 14 which diffract the incident light with each element creating an individually controllable relative phase shift φ_1-φ_N. Although not essential to the invention, the grating elements 14 shown in Figure 8 are illustrated in a coplanar configuration. Again, however, it will be understood that their relative locations can be adjusted (typically, up and down as viewed in Figure 8) in order to adjust

the relative phase shifts and thus effect diffraction of the wavelength bands to desired spatial locations at which receptors are positioned.

Figure 9 illustrates a situation where the grating elements 14' are transmissive. This can be the case where the elements 14' are, for example, liquid crystals. The incident light is diffracted by the grating elements 14' with each element providing an individually controlled relative phase shifts φ_1-φ_N. As in the case of Figure 8, grating elements 14' in Figure 9 are shown in a coplanar configuration. Again, the relative phase shift of the light diffracted by of these elements 14' can be adjusted (typically by application of a voltage to each of the liquid crystal elements to adjust the optical path length) to vary the spatial positions to which the wavelength bands are diffracted.

Referring now to Figures 1, 2a, and 2b, a controllable diffraction grating 10 is described. Those figures illustrate construction of a controllable diffraction grating for use in accordance with the present invention. Figure 1 is a top plan view of a controllable diffracting grating device that may be utilized with the present invention. It will be understood, however, that, while a specific controllable diffraction grating structure is illustrated, other structures are specifically contemplated for

effecting diffraction of light in accordance with the present invention. For example, liquid crystals, etc., as discussed hereinbefore, could also be used as the diffractive element.

The device shown generally includes an array of elements 14 for diffracting the incoming light. Also shown are a support to which the grating elements are mounted, and means for selectively adjusting the position of the grating elements relative to the incoming light so that the direction in which each wavelength band of light diffracts can be varied and a wavelength band is individually and selectively directed to a desired receptor. In this device, a base substrate 12 supports the diffraction grating. The individual diffraction elements comprise grating elements 14, each having a diffraction surface 16, a resilient layer 20, and means for adjusting the position of the grating elements 14 provided by electrode 28 connected through conducting layer 13 to an electrical control voltage V. The grating elements 14 and resilient layer 20 are spaced from each other by support members 18, and the resilient layer 20 is spaced from the base substrate 12 by support members 24. The device also comprises additional layers 15 and 17 that provide electrical insulation, grounded electrodes 26, and ground connections 19 to the resilient layer 20. The specific details of a similar device to that shown in Figures 1, 2a and 2b are discussed in U.S. Patent No. 5,757,536 to Ricco et al.

and in U.S. Patent Application Serial No. 09/537,936 to Elmer Hung et al. These are hereby incorporated by reference.

As shown in Figures 3-7, an apparatus configured according to the present invention can provide a variety of functions. For example, the apparatus can take a single input beam, separate it into a plurality of output light streams, each having a different wavelength band and forming a signal, and direct the output light stream to different output receptors. An input light beam could emanate from the end of an optical fiber, from an optical waveguide, or other source. Typically, an optical output fiber is placed to define each output receptor. An output receptor may also be defined by an optical detector or by an optical waveguide. The direction of each output signal can be selectively and independently adjusted to enable the output signal to enter any one or more of the output fibers.

Additionally, light from the signal may be collimated with an optical collimating device 32 prior to being provided to the controllable diffracting grating 10, and the light diffracted by the grating 10 can be focused with an optical focusing device 38 while being directed to output fibers 36. Collimating and focusing devices 32 and 38, respectively, may include one or more optical elements such as lenses, mirrors, apertures and the like.

Figures 3-5 show some examples of the various device

operations capable with the present invention. For example, as shown in Figure 3, output signal λ_1 is directed to the leftmost output fiber 36-1, λ_2 is directed to the center output fiber 36-2, and λ_n is directed to the rightmost output fiber 36-n. In Figure 4, the directions of the output signals have been changed, by operating grating members 14, and they are shown as entering different output fibers. As shown in Figure 4, output signal λ_1 is directed to the rightmost output fiber 36-n, λ_2 is directed to the leftmost output fiber 36-1, and λ_n is directed to the center output fiber 36-2. These changes in the direction are made by the precise arrangement of the positions of the different grating elements 14 to achieve the phase shifts calculated by the method previously described, and as implemented by controller 34. In order to effectuate a change in the directions of the output signals, the positions of the grating elements are reconfigured into a new arrangement, calculated as described previously.

Figure 5 shows two other types of output operations capable with a device in accordance with the present invention. As shown, both of the output signals λ_1 and λ_n are directed to the leftmost output fiber 36-1, while λ_2 is directed to both the center output fiber 36-2 and the rightmost output fiber 36-n. The directing of signals λ_1 and λ_n show that a user, connected to a particular output

fiber 36-1, can receive a large amount of information at once. The directing of signal λ_2 shows that several users can receive the same information at the same time.

The device of the present invention may also be utilized to receive input beams from several fibers or other sources at the same time. In Figure 6 the device takes several input signals from multiple input sources and selectively directs them to several output fibers 36-1 - 36n. In Figure 7, the device takes several input signals from multiple input fibers 30 and directs them into a single output fiber 36. In an alternative embodiment, fibers 30 can be replaced by an array of individual waveguides.

The controller 34 is a device that directs movement of the individual grating elements into the proper positioning to effectuate the direction of the output signals to the correct output fibers 36. The controller 34 may include one or more electronic control circuits for addressing and actuating the grating elements 14 of programmable wavelength selective switch 10. Controller 34 may also include a microprocessor or means for accessing the controller by an external microprocessor or computer.

The position of the grating elements is provided, as shown, by selectively adjusting the positions of the grating elements relative to the incoming light so that adjustment of the grating elements changes the relative optical phase of light diffracted

from each element, and hence the direction in which each wavelength band, or wavelength bands, of light is individually and selectively directed to a desired receptor. Any means known in the art may, however, be utilized for positioning the grating elements.

Operation of the controllable diffraction grating 10 is illustrated in Figures 2a and 2b. During operation of controllable diffraction grating 10, each grating element 14 is translated in a direction generally perpendicular with respect to the underlying base 12. Translation is provided by applying a voltage to one or more actuating electrodes 28, thereby forming an air gap capacitor between one or more actuating electrodes 28 and resilient member 20, which can be grounded. The resultant electrostatic force of attraction tends to flex resilient member 20, and in turn move grating element 14 toward the actuating electrodes 28. Landing electrodes 26 prevent resilient member 20 from contacting one or more of the actuating electrodes 28. By calibrating the electromechanical characteristics of the grating element, the voltage required to move each grating element to a desired position may be calculated.

It will be understood that, irrespective of the diffraction operation illustrated in Figures 3-7 being performed, the present invention enables selective and independent direction and redirection of a single wavelength band of light or multiple

wavelength bands of light to be accomplished. This can be done independent of the status of other bands of light. The present invention thus affords significantly greater versatility than that presently known in the art.

It will be understood that this disclosure, in many respects, is only illustrative. Changes may be made in details, particularly in matters of shape, size, material, and arrangement of parts without exceeding the scope of the invention. Accordingly, the scope of the invention is as defined in the language of the appended claims.

WHAT IS CLAIMED IS:

1. Apparatus for processing light, comprising:

(a) an emitter for transmitting light including multiple wavelength bands generally along an axis, each band including a distinct related range of collateral wavelengths;

(b) a plurality of spatially positioned receptors;

(c) a diffracting member for diffracting said wavelength bands to various of said receptors; and

(d) a controller for selectively adjusting said diffracting member to independently vary the receptor to which each wavelength band is diffracted.

2. Apparatus in accordance with Claim 1 wherein said diffracting member is a controllable diffraction grating.

3. Apparatus in accordance with Claim 2 wherein said controllable diffraction grating comprises a plurality of diffractive elements, each element being individually controllable by said controller.

4. Apparatus in accordance with Claim 3 wherein said elements effect diffraction by regulating the relative phase of light of

said wavelength bands emanating from each element.

5. Apparatus in accordance with Claim 2 wherein said controller is programmable.

6. Apparatus in accordance with Claim 5 wherein said diffractive elements are controlled by said controller to vary the relative positions thereof to effect diffraction of said wavelength bands.

7. Apparatus in accordance with Claim 5 wherein said diffractive elements are reflective.

8. Apparatus in accordance with Claim 5 wherein said diffractive elements are transmissive.

9. Apparatus in accordance with Claim 2 wherein said elements effect diffraction by regulating amplitude of said wavelength bands.

10. An optical processor, comprising:

(a) an optical input transmitting a plurality of copropagating optical signals, each signal having a

distinct wavelength band;

(b) a plurality of optical outputs;

(c) a variably controllable diffraction grating member including a plurality of diffractive elements, wherein one of the relative phase shift and amplitude of said copropagating optical signals processed by each element is individually controlled; and

(d) a controller operatively connected to the variable diffraction grating member to control the wavelength bands so as to direct the plurality of copropagating optical signals to selected one or more of said optical outputs.

11. An optical processor in accordance with Claim 10 wherein the copropagating optical signals define communications information.

12. An optical processor in accordance with Claim 10 further comprising optics intermediate said optical input and said variable diffraction grating member to direct a copropagating optical signal onto said variable diffraction grating member.

13. An optical processor in accordance with Claim 12 further comprising optics intermediate said variable diffraction grating

member and an optical output to direct a copropagating optical signal onto a corresponding, selected optical output.

14. An optical processor in accordance with Claim 10 wherein said optical input comprises an emitting end surface of an optical fiber.

15. An optical processor in accordance with Claim 10 wherein said optical outputs comprise end surfaces of respective optical fibers.

16. An optical processor in accordance with Claim 10 wherein said optical input comprises a light-emitting region of an optical wave guide.

17. An optical processor in accordance with Claim 10 wherein said optical outputs comprise input surfaces of respective optical wave guides.

18. An optical processor in accordance with Claim 10 wherein said elements of said variable diffraction grating member are reflective.

19. An optical processor in accordance with Claim 10 wherein said elements of said variable diffraction grating member are transmissive.

20. An optical processor in accordance with Claim 10 wherein said diffractive elements are controlled by said grating member to vary the relative positions thereof to effect diffraction of the wavelength band of each copropagating optical signal.

21. An optical processor in accordance with Claim 10 wherein said processor comprises a plurality of optical inputs, each transmitting a copropagating optical signal having a distinct wavelength band.

22. An optical processor in accordance with Claim 10 wherein said controller is electrically operated.

23. A method of processing light emanating from an input and directing each of multiple distinct wavelength bands of the light to a desired receptor, comprising the steps of:

(a) directing the light along an axis;

(b) diffracting the wavelength bands of the light in different directions; and

(c) selectively varying the direction of each wavelength band to a receptor independent of other wavelength bands.

24. A method in accordance with Claim 23 further comprising the step of allowing redirection of each wavelength band to a different one of multiple receptors.

25. A method for directing a particular wavelength band of a plurality of wavelength bands of incoming light, comprising the steps of:

providing a diffraction grating including a plurality of diffraction grating elements;

calculating a position and orientation of each diffraction grating element necessary to direct a wavelength band of the incoming light to a predetermined output location; and

positioning the diffraction grating elements in calculated positions and orientations to diffract the wavelength bands of light to predetermined output locations.

26. An optical processor, comprising:

(a) a plurality of optical inputs, each transmitting one or

more copropagating optical signals, each signal having a distinct wavelength band;

(b) an optical output;

(c) a variably controllable diffraction grating member including a plurality of elements, wherein one of the relative phase shift and amplitude of said copropagating optical signals processed by each element is individually controlled; and

(d) a controller operatively connected to the variable diffraction grating member to control wavelength bands so as to direct the plurality of copropagating optical signals to said optical output.

27. An optical processor in accordance with Claim 26 wherein said controller is operatively connected to the variable diffraction grating member to control the wavelength bands so as to direct the plurality of copropagating optical signals to a plurality of optical outputs.

28. A wavelength selective optical switch for directing one wavelength band of multiple bands of incoming light transmitted by an emitter, comprising:

(a) a controllable diffraction grating comprising a

plurality of grating elements for diffracting the incoming light; and

(b) a controller for selectively adjusting a position of each grating element, wherein a direction in which each wavelength band of light is individually and selectively diffracted to a desired location is controlled.

29. A switch according to Claim 28, wherein said controller is configured to adjust one or more of said grating elements, and wherein adjustment of said grating elements changes the direction in which each wavelength band of light is individually and selectively diffracted to predetermined locations.

30. A switch according to Claim 28, wherein said controller electrostatically adjusts the position of each of said grating elements.

31. A method for directing a plurality of wavelength bands of incoming light, comprising the steps of:

providing a diffraction grating including a plurality of diffraction grating elements;

determining locations of the plurality of diffraction

grating elements necessary to direct wavelength bands of the incoming light to desired output locations; and

positioning the plurality of diffraction grating elements at the determined locations to selectively diffract a wavelength band of light to a predetermined output location independently of other of the wavelength bands.

Fig. 1

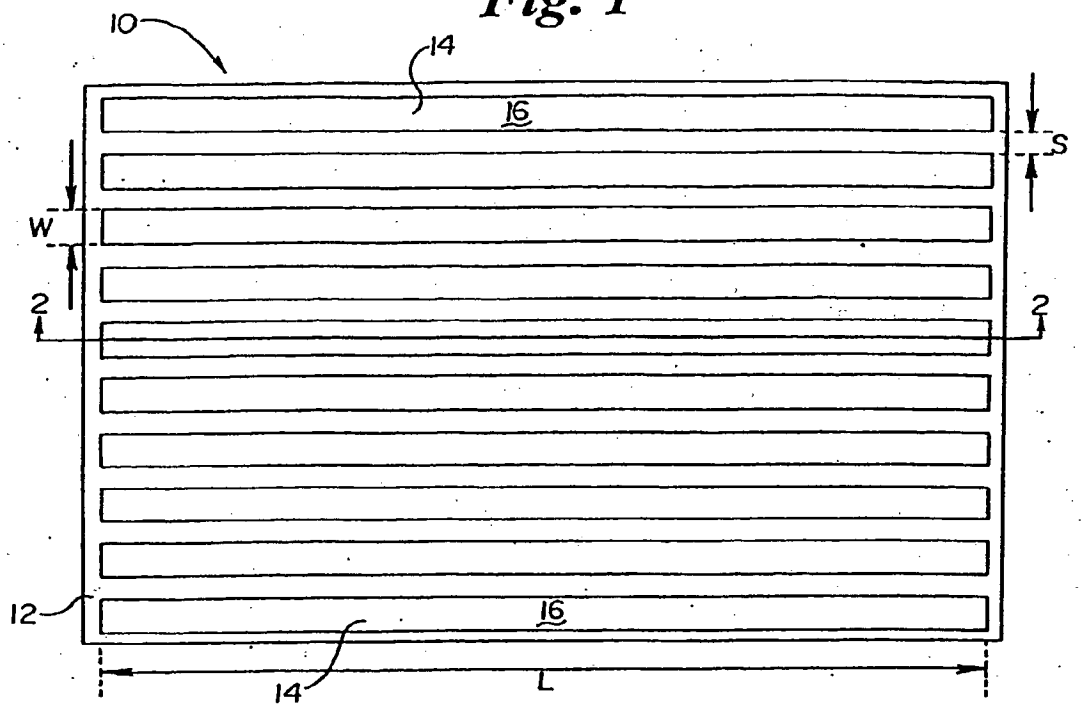

Fig. 2a

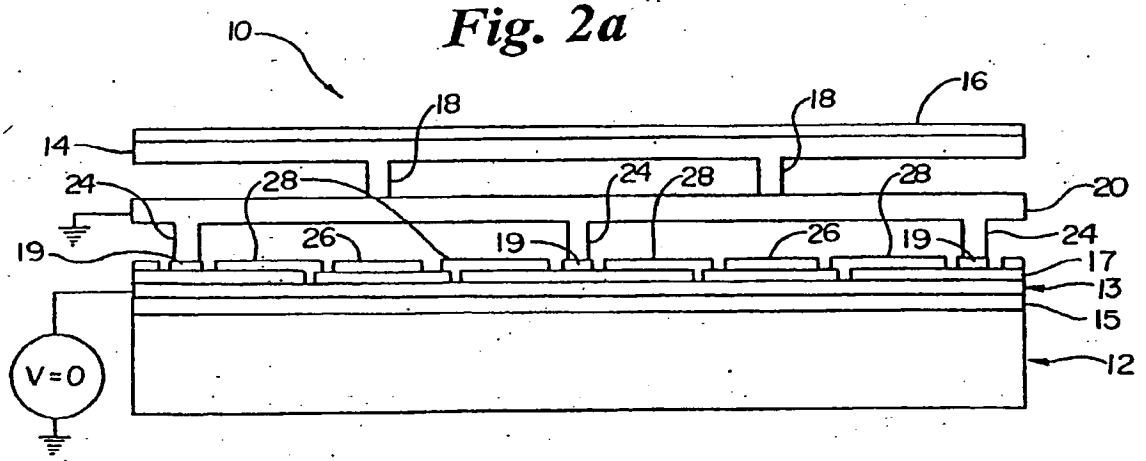

Fig. 2b

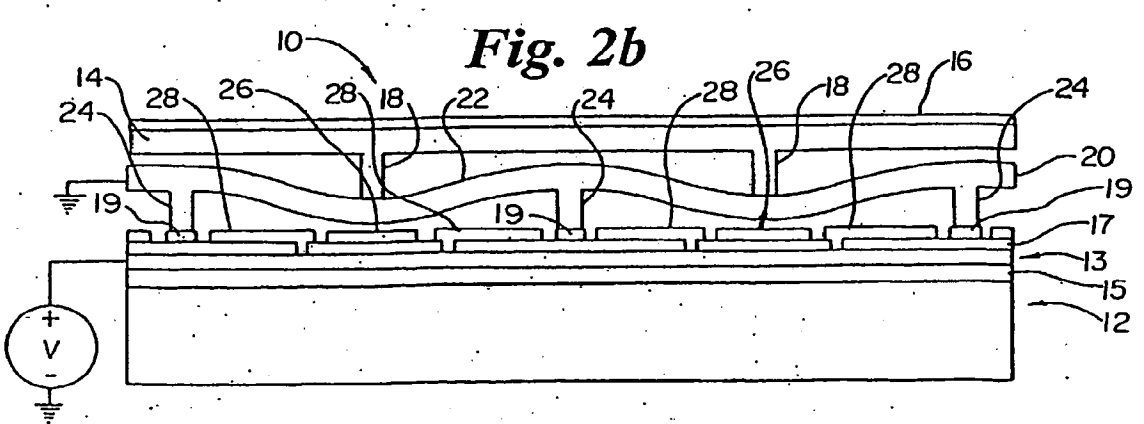

Fig. 3

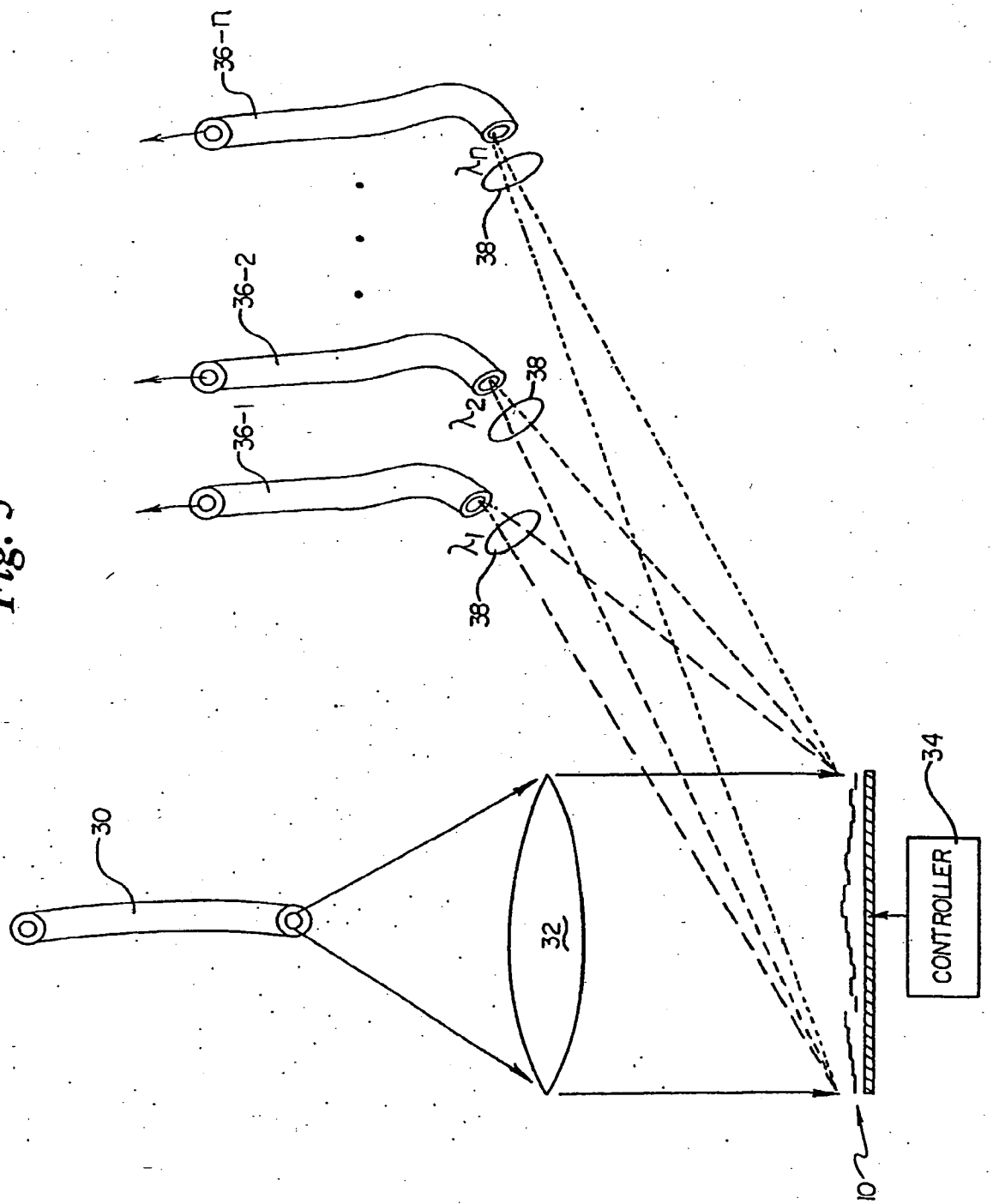

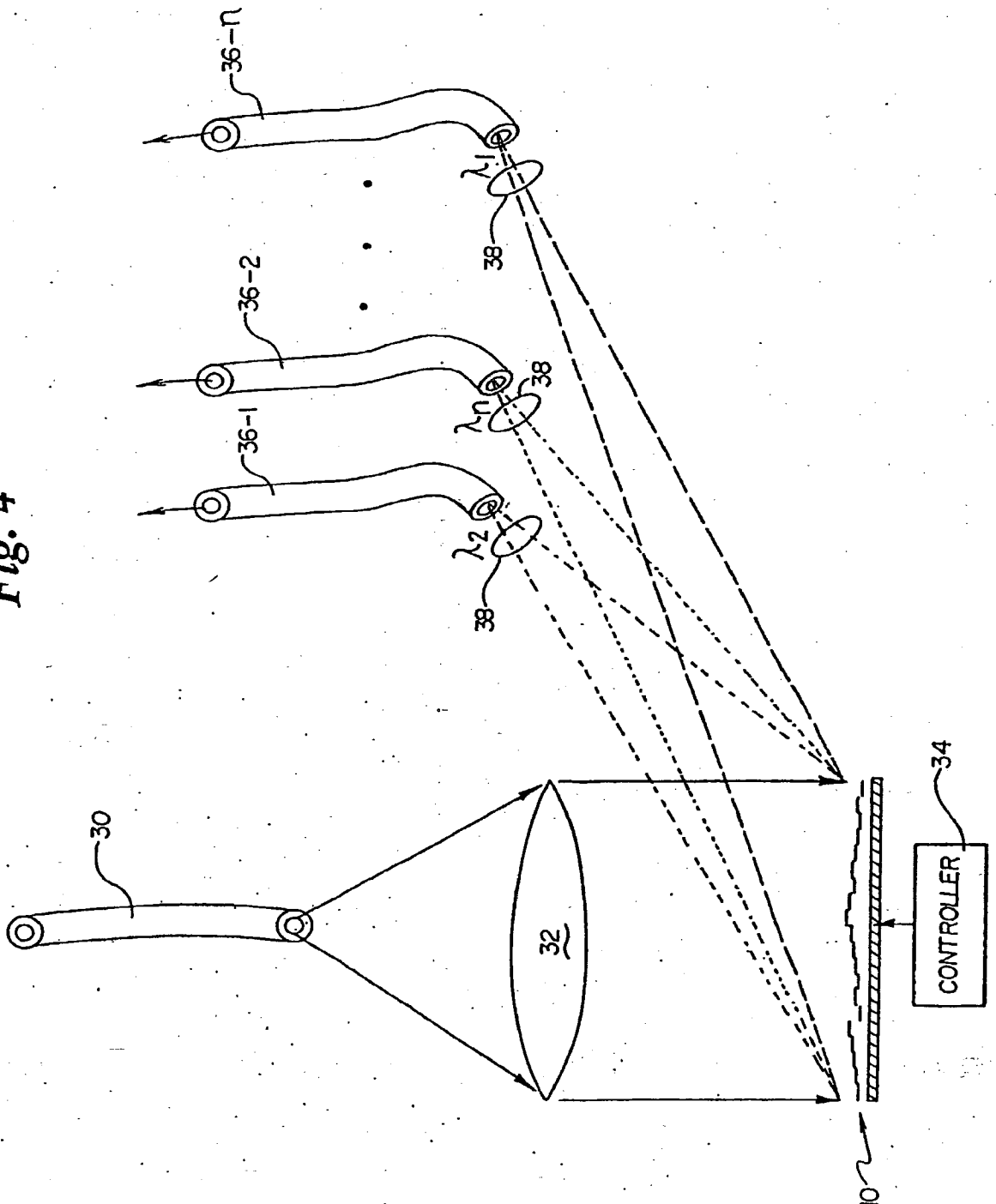

Fig. 4

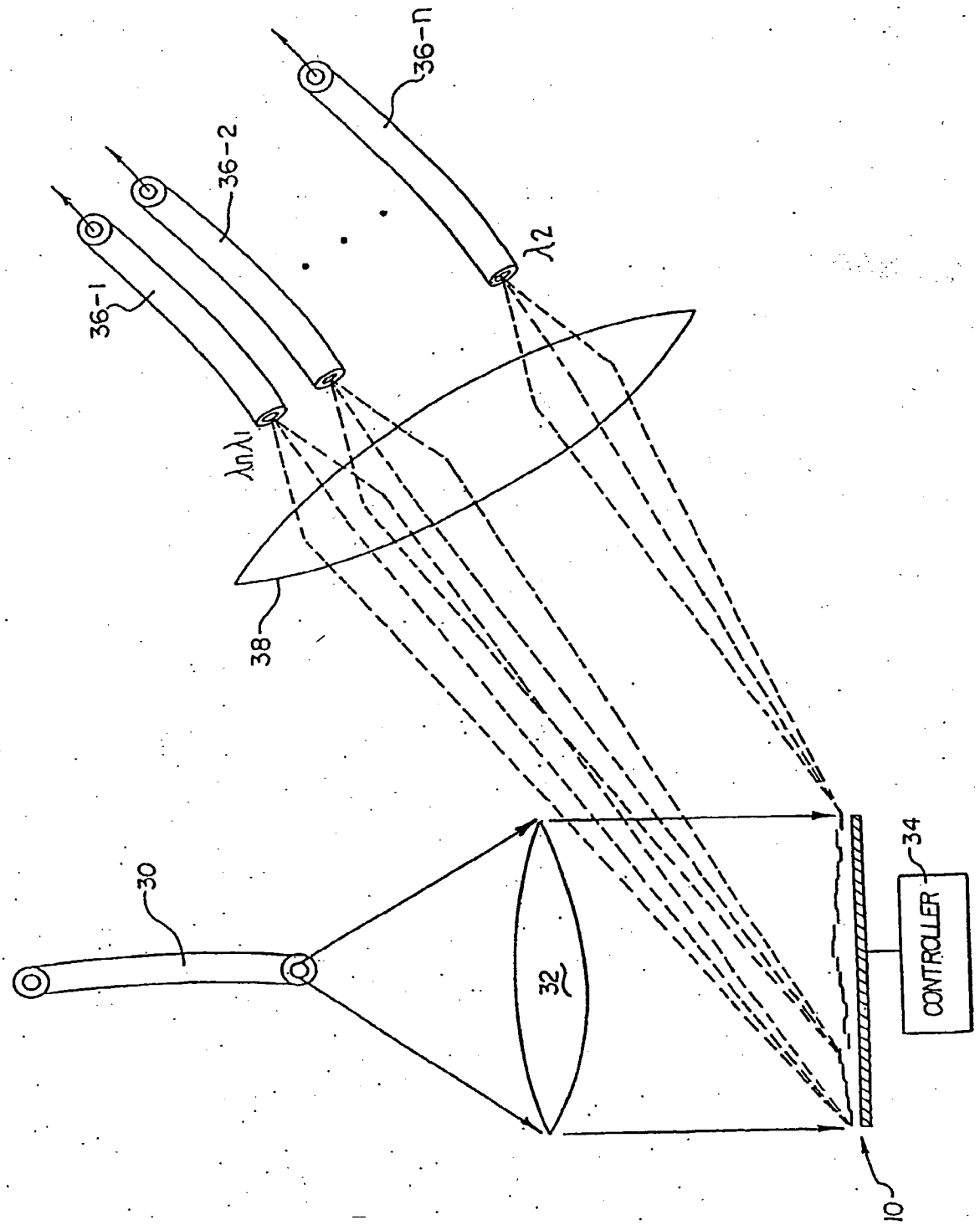

Fig. 5

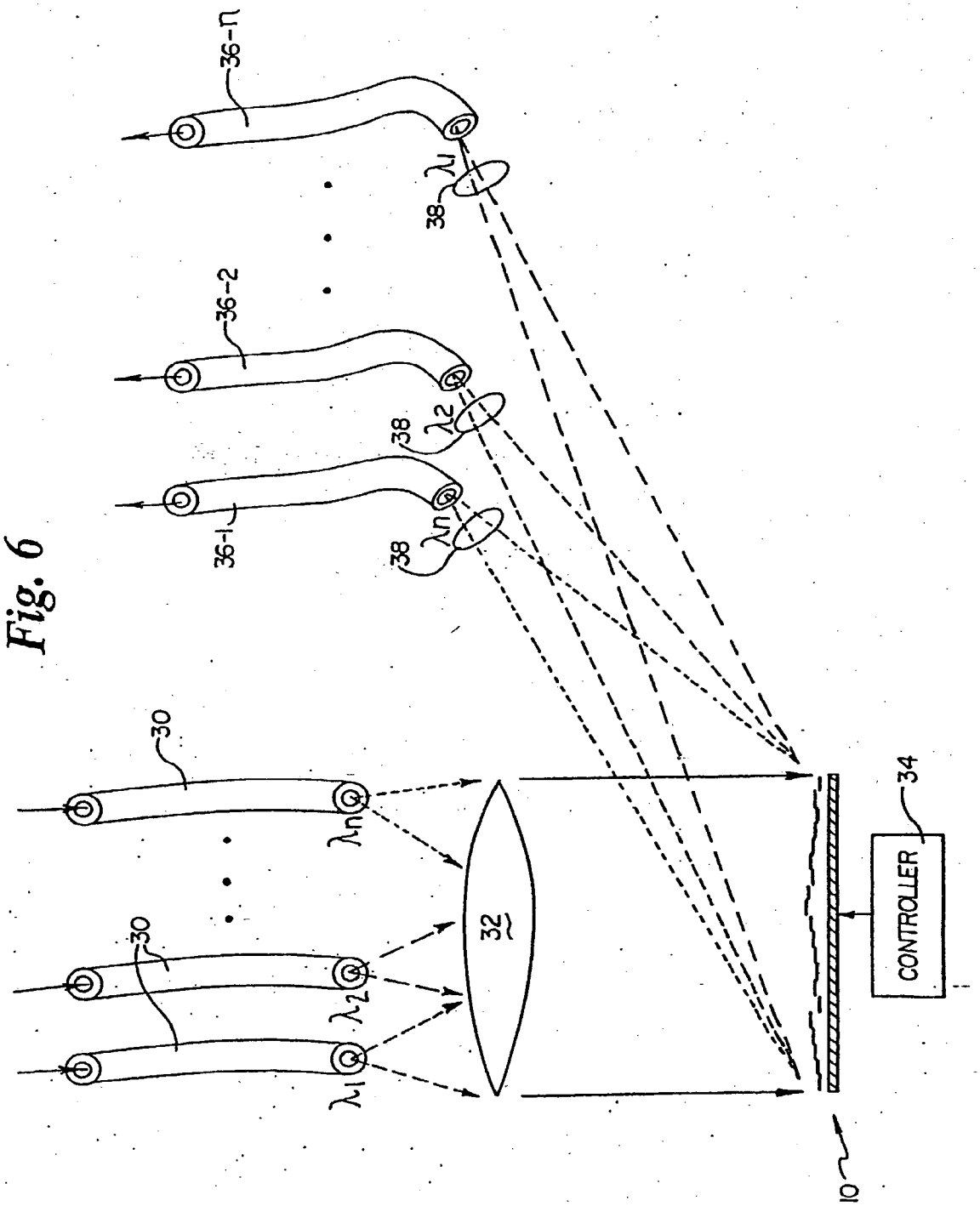

Fig. 6

Fig. 7

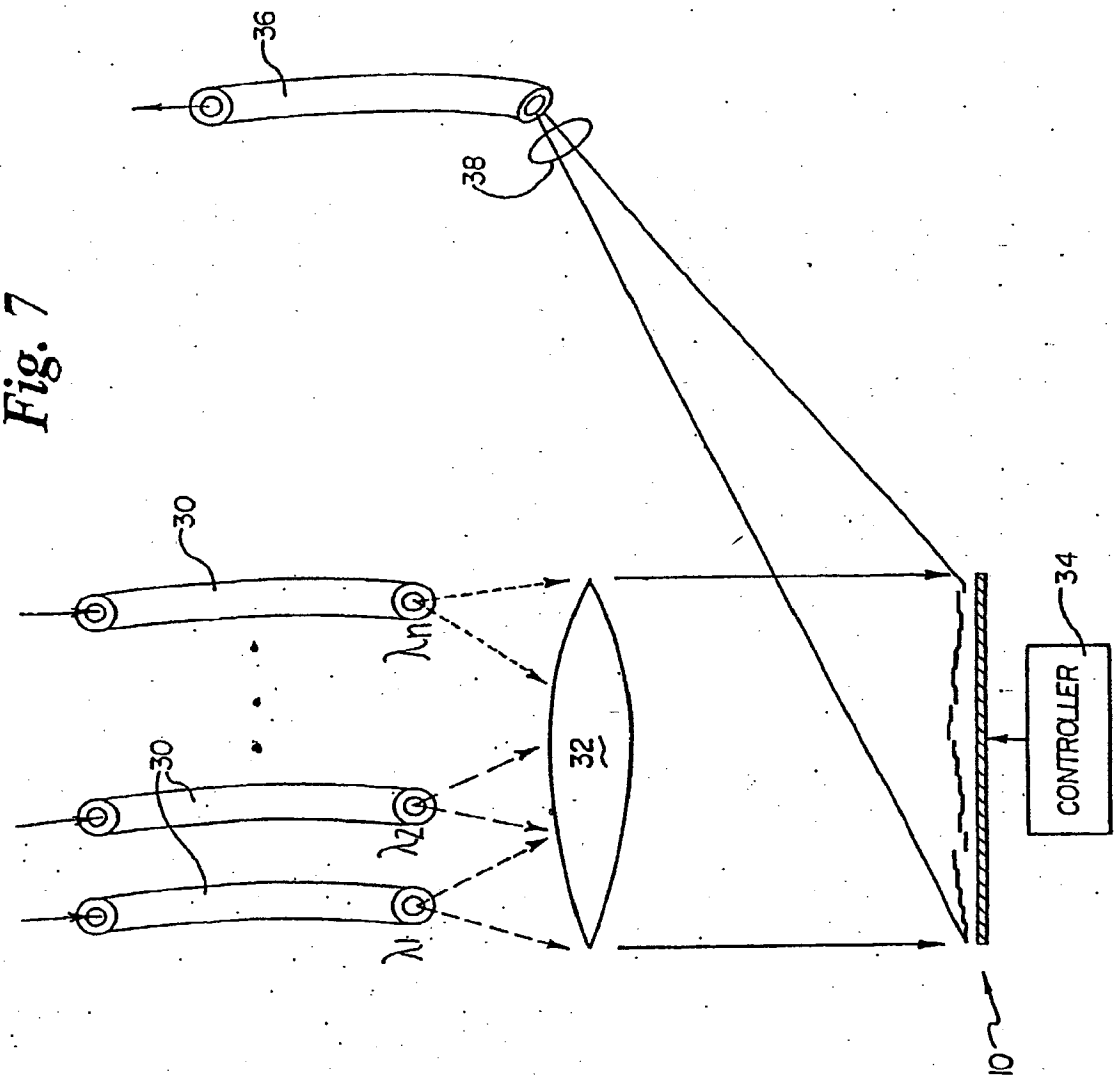

Fig. 8

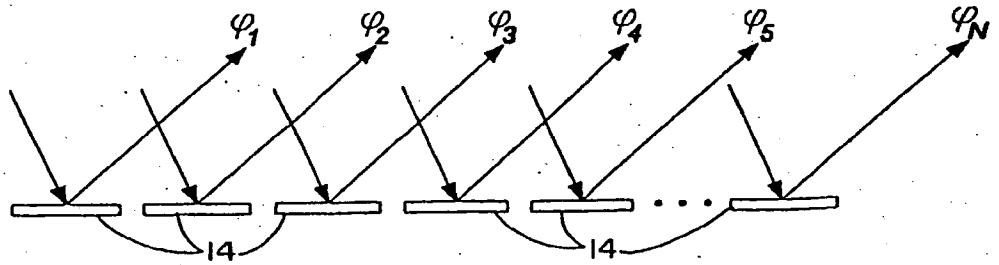

Fig. 9

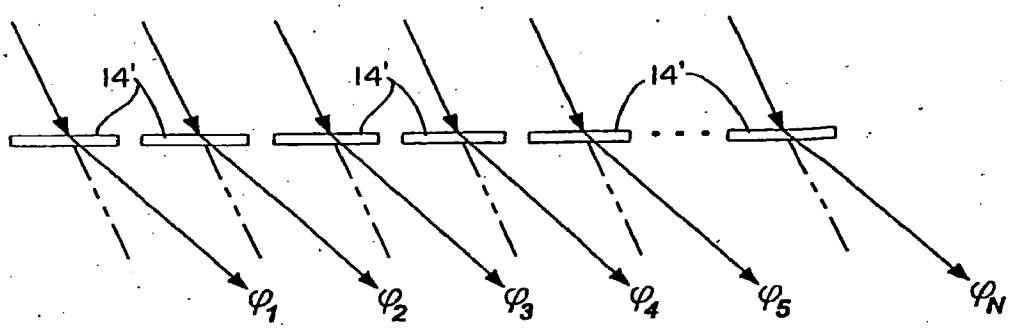

INTERNATIONAL SEARCH REPORT

Internatl Application No
PCT/US 02/18255

A. CLASSIFICATION OF SUBJECT MATTER
IPC 7 G02F1/313 G02B6/34 G02B26/08 G02B5/18

According to International Patent Classification (IPC) or to both national classification and IPC

B. FIELDS SEARCHED

Minimum documentation searched (classification system followed by classification symbols)
IPC 7 G02F G02B

Documentation searched other than minimum documentation to the extent that such documents are included in the fields searched

Electronic data base consulted during the international search (name of data base and, where practical, search terms used)
EPO-Internal, WPI Data

C. DOCUMENTS CONSIDERED TO BE RELEVANT

Category °	Citation of document, with indication, where appropriate, of the relevant passages	Relevant to claim No.
X	US 5 757 536 A (RICCO ANTONIO J ET AL) 26 May 1998 (1998-05-26) cited in the application	1-7,10, 11, 14-18, 20-31
Y	figures 1,2,8 column 1, line 10-27 column 2, line 45-67 column 4, line 32 -column 5, line 14 column 12, line 12 -column 13, line 53 --- -/--	12,13

[X] Further documents are listed in the continuation of box C. [X] Patent family members are listed in annex.

° Special categories of cited documents :

"A" document defining the general state of the art which is not considered to be of particular relevance
"E" earlier document but published on or after the international filing date
"L" document which may throw doubts on priority claim(s) or which is cited to establish the publication date of another citation or other special reason (as specified)
"O" document referring to an oral disclosure, use, exhibition or other means
"P" document published prior to the international filing date but later than the priority date claimed

"T" later document published after the international filing date or priority date and not in conflict with the application but cited to understand the principle or theory underlying the invention
"X" document of particular relevance; the claimed invention cannot be considered novel or cannot be considered to involve an inventive step when the document is taken alone
"Y" document of particular relevance; the claimed invention cannot be considered to involve an inventive step when the document is combined with one or more other such documents, such combination being obvious to a person skilled in the art.
"&" document member of the same patent family

Date of the actual completion of the international search	Date of mailing of the international search report
30 September 2002	09/10/2002

Name and mailing address of the ISA	Authorized officer
European Patent Office, P.B. 5818 Patentlaan 2 NL – 2280 HV Rijswijk Tel. (+31-70) 340-2040, Tx. 31 651 epo nl, Fax: (+31-70) 340-3016	Noirard, P

Form PCT/ISA/210 (second sheet) (July 1992)

INTERNATIONAL SEARCH REPORT

Internat[illegible] Application No
PCT/US 02/18255

C.(Continuation) DOCUMENTS CONSIDERED TO BE RELEVANT

Category °	Citation of document, with indication,where appropriate, of the relevant passages	Relevant to claim No.
X	US 5 581 642 A (BISCHEL WILLIAM K ET AL) 3 December 1996 (1996-12-03) figures 7,8,38,39 column 20, line 61,62 column 22, line 29-40 column 58, line 60 -column 59, line 5 column 61, line 27-29 column 61, line 44 -column 62, line 47	1-5, 7-11, 16-19, 21-24, 26,27
X	US 5 832 148 A (YARIV AMNON) 3 November 1998 (1998-11-03) column 4, line 27 -column 5, line 4; figures 1A,1B,2,4 column 8, line 15-64	1-3,5, 23,24
Y	GB 2 105 489 A (PHILIPS NV) 23 March 1983 (1983-03-23) abstract; figure 3	12,13
A	MEARS R J ET AL: "TELECOMMUNICATIONS APPLICATIONS OF FERROELECTRIC LIQUID-CRYSTAL SMART PIXELS" IEEE JOURNAL OF SELECTED TOPICS IN QUANTUM ELECTRONICS, IEEE SERVICE CENTER, US, vol. 2, no. 1, April 1996 (1996-04), pages 35-46, XP002155684 ISSN: 1077-260X paragraphs '0003!,'0005!	7-9,18, 19
X	WO 01 37014 A (PAWLUCZYK ROMUALD ;CME TELEMETRIX INC (CA)) 25 May 2001 (2001-05-25)	23
A	page 1 -page 8; figures 1A,1B	1,10,25, 26,28,31

Form PCT/ISA/210 (continuation of second sheet) (July 1992)

INTERNATIONAL SEARCH REPORT

Information on patent family members

Internat Application No
PCT/US 02/18255

Patent document cited in search report		Publication date	Patent family member(s)		Publication date
US 5757536	A	26-05-1998	NONE		
US 5581642	A	03-12-1996	WO	9607940 A1	14-03-1996
			US	5781670 A	14-07-1998
US 5832148	A	03-11-1998	NONE		
GB 2105489	A	23-03-1983	NL	8104124 A	05-04-1983
			AU	552527 B2	05-06-1986
			AU	8798482 A	17-03-1983
			CA	1188552 A1	11-06-1985
			DE	3232493 A1	24-03-1983
			FR	2512560 A1	11-03-1983
			IT	1152528 B	07-01-1987
			JP	58060721 A	11-04-1983
			SE	8205021 A	03-09-1982
WO 0137014	A	25-05-2001	AU	1262201 A	30-05-2001
			WO	0137014 A1	25-05-2001
			EP	1228388 A1	07-08-2002

XP-000783511

G02B6/3434

WDM CHANNEL MANAGEMENT USING PROGRAMMABLE HOLOGRAPHIC ELEMENTS

R J Mears*, A D Cohen,** and M C Parker*

P.D. 18-06-98
p. 11/1 - 11/6 = 6

We describe results of a high-resolution (0.8nm) holographic, digital multi-wavelength filter, based on a ferroelectric liquid crystal (FLC) spatial light modulator (SLM). The filter has applications as a wavelength-division-multiplexing (WDM) technology for use in optical telecommunications. The polarisation-insensitive FLC SLM acting as a programmable holographic element in conjunction with a highly wavelength-dispersive fixed diffractive element has been used to perform a number of important WDM functions: Demultiplexing of single and multiple (up to 4), segmented passbands spaced by 0.8nm, and dynamic erbium-doped fibre ampifier (EDFA) gain equalisation. Apodisation of the filter passband has been demonstrated, and optical add/drop multiplexing is also possible using the holographic technique. The filter offers potential low loss, excellent crosstalk characterisitcs, and a high resolution over a large tuning range.

Introduction

The development of the erbium-doped fibre amplifier (EDFA) [1] has opened up the possibility of very high bandwidth data pipes, for example by using WDM [2], as well as allowing new optically transparent architectures, such as wavelength-routed networks [3]. These new systems require specialised functional components, such as tunable sources, receivers, switches and routers, reconfigurable optical amplifiers and wavelength converters. Optical telecommunications networks require components which are optically transparent and polarisation-insensitive, have a low crosstalk and low loss, achieve high resolution tuning, are compact and operate at low powers. In this paper we describe how holographic filtering already satisfies most of these demands, and is becoming increasingly attractive as a polarisation-insensitive [4] WDM technology for active channel management [5,6]. To date, holographic filtering has been used to demonstrate 4, 6 and 8 WDM channel equalisation spaced by 4nm [6,7,8]. However, by using a high-spatial frequency (300 lines/mm) blazed grating, a resolution of 0.22nm has been achieved, which allows the filter to manage WDM channels spaced by the ITU 0.8nm standard.

Holographic Filter Operation

The operation of the high-resolution tunable holographic wavelength filter, shown schematically in figure 1, is based on the wavelength-dispersive nature of diffraction gratings. On its own, the SLM pixel pitch (165μm) is too large for useful tuning to be obtained. However, a fixed blazed diffraction grating of high spatial frequency (300 lines/mm, i.e. line-pair width of 6.66μm) used in conjunction with the SLM yields a compact high resolution filter. The use of an electrically addressed SLM (EASLM), to display a desired phase pattern, provides a programmable grating (*i.e.* a hologram) whose spatial period can be altered at will. In addition, holograms can be designed to have multiple spatial periods, to allow multiple wavelength tuning. A lens placed after the SLM and fixed diffraction grating converts the angular separation of wavelengths to a spatial separation, and a single-moded (SM) optical fibre acts as a fixed spatial filter to select the desired wavelengths.

* Department of Engineering, University of Cambridge, Trumpington St., Cambridge, CB2 1PZ, U.K. *Email*: rjm@eng.cam.ac.uk,
** JDS Fitel, 570 West Hunt Club Rd, Nepean, Ont. K2G 5W8, Canada. *Email*: Adam_Cohen@jdsfitel.com
* Fujitsu Telecommunications Europe Ltd., Research, Northgate House, St Peter's St, Colchester, Essex, CO1 1HH, U.K., *Email*: M.Parker@ftel.co.uk

© 1998 The Institution of Electrical Engineers.
Printed and published by the IEE, Savoy Place, London WC2R 0BL, UK.

BEST AVAILABLE COPY

AS

TS0000532

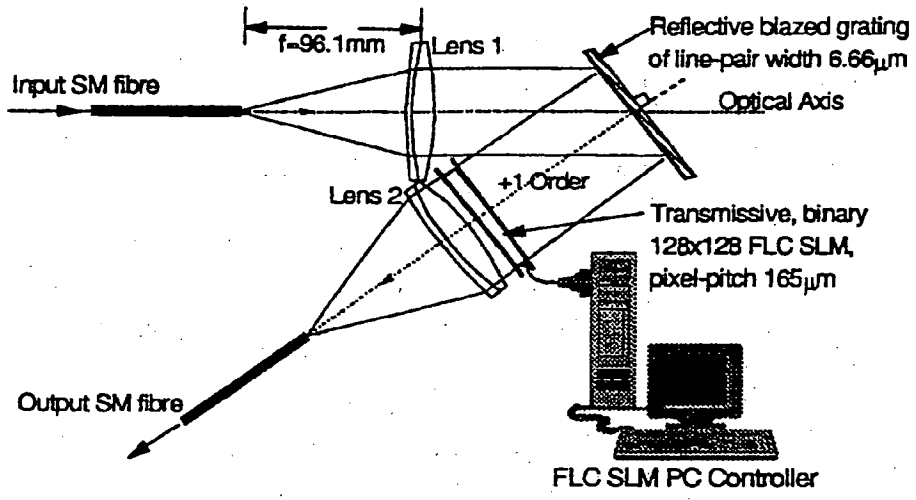

Figure 1: Schematic diagram of polarisation-insensitive holographic wavelength filter

Tunable Holographic Wavelength Filter

The current filter has a tuning range of 12.4nm in steps averaging 0.22nm, with a 3dB passband of 0.3[illegible] is polarisation-insensitive. Figure 2 shows the spectral profile of the filter transmission using a holo[illegible] Without apodisation, it is close to Gaussian in shape. However, beyond 0.66nm either side of [illegible]

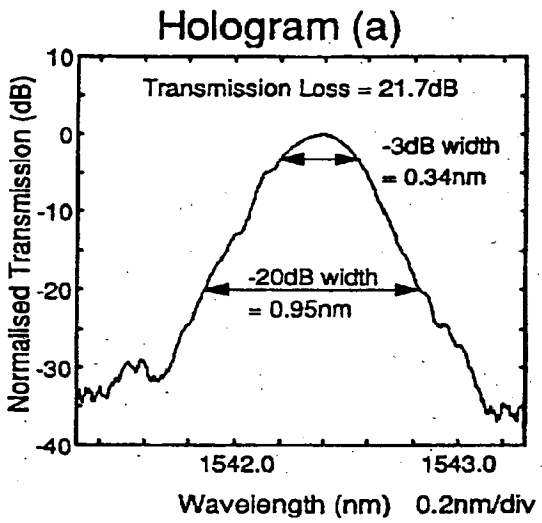

Figure 2: Logarithmic plot of filter passband with FWHM=0.34nm

wavelength, the filter extremities depart from Gaussian behaviour and has the larger 'tails', as illustra[illegible] figure, of a Bessel function, which converges to zero more slowly than a Gaussian. The diagram show[illegible] filter has an optical signal-to-noise ratio, SNR >30dB. However, this is only achieved for wavelengt[illegible] than ~0.7nm away from the central wavelength, owing to the convolution arising from the Gauss[illegible] coupling efficiency into the fibre end. The 21.7dB loss of the filter is accounted for in the following tab[illegible]

BEST AVAILABLE COPY

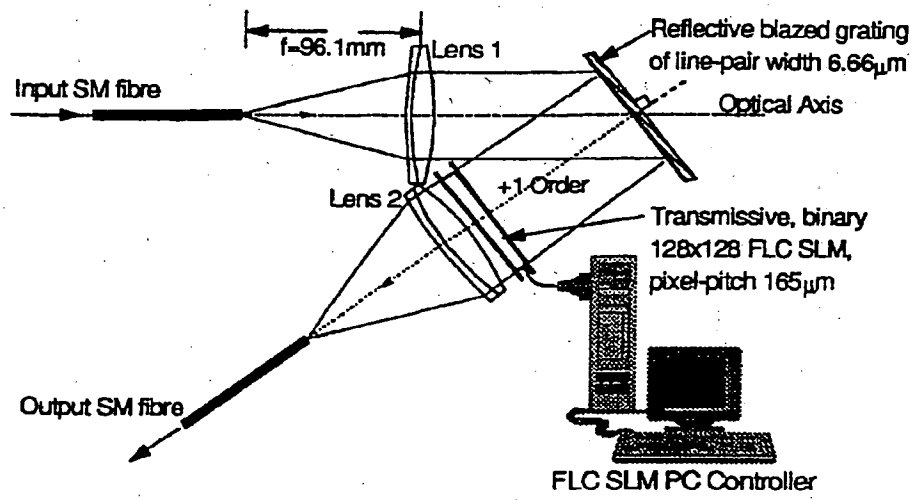

Figure 1: Schematic diagram of polarisation-insensitive holographic wavelength filter

Tunable Holographic Wavelength Filter

The current filter has a tuning range of 12.4nm in steps averaging 0.22nm, with a 3dB passband of 0.34nm, and is polarisation-insensitive. Figure 2 shows the spectral profile of the filter transmission using a hologram (a). Without apodisation, it is close to Gaussian in shape. However, beyond 0.66nm either side of the centre

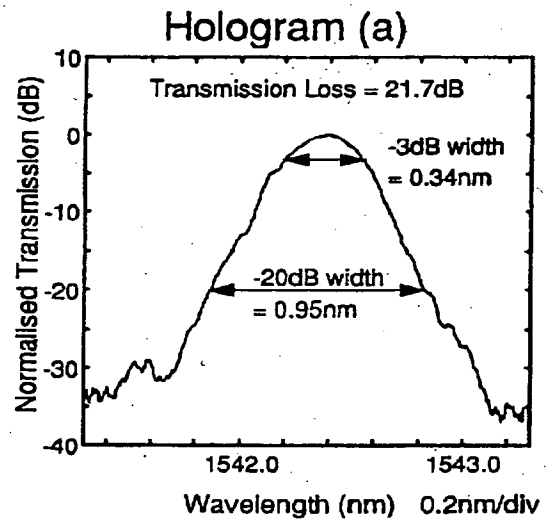

Figure 2: Logarithmic plot of filter passband with FWHM=0.34nm

wavelength, the filter extremities depart from Gaussian behaviour and has the larger 'tails', as illustrated in the figure, of a Bessel function, which converges to zero more slowly than a Gaussian. The diagram shows that the filter has an optical signal-to-noise ratio, SNR >30dB. However, this is only achieved for wavelengths greater than ~0.7nm away from the central wavelength, owing to the convolution arising from the Gaussian/Bessel coupling efficiency into the fibre end. The 21.7dB loss of the filter is accounted for in the following table:

BEST AVAILABLE COPY

TS0000534

SLM Losses	dB
FLC switching angle (2θ=28°)	6.57
Diffraction efficiency (η=36.5%)	4.38
Aperturing of SLM	0.79
Blazed Grating Losses	
Diffraction efficiency (η=~65%)	1.90
Phase depth optimised for λ=1μm	1.43
Sundry Losses	
10 reflecting surfaces, each contributing 4% loss	1.77
FC/PC patchcord uniter losses (×2)	1.14
fibre/lens coupling efficiency (~42%)	3.72
TOTAL	**21.7**

Optimisation of the FLC and optical components, use of a 1.55μm blazed grating and careful design should allow a total optical loss of only ~7dB.

Since the FLC is not fully bistable it is necessary to periodically update all the pixels, with the frame being downloaded row by row. A practical device, however, would make use of either a bistable FLC or an alternative addressing scheme, removing the need for the update process other than when changing between different holograms. The effect of the periodic updating is to cause a small modulation during normal transmission of approximately 0.035dB. This is illustrated in Figure 3. The ~1dB loss of the signal that occurs during the periodic frame update is undesirable, but new pixel addressing schemes currently under development for silicon backplane FLC SLMs should eliminate the need for this process, even with an FLC material that is not fully bistable. A fully bistable FLC used within the SLM would avoid all temporal modulation of the light and also allow fail-safe operation of the device. In the event of a power failure, the SLM would still continue to diffract the light and the device still operate, albeit without reconfigurability.

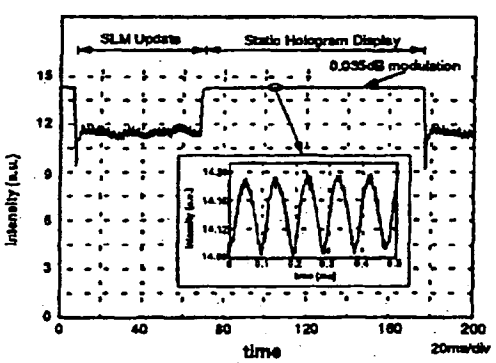

Figure 3: Temporal modulation of filtered light

Passband Apodisation

The Gaussian spectral-profile may be tailored to achieve a more apodised, passband-flattened response, by modifying the hologram. This is shown in figure 4, which shows the normalised transmission characteristic for a different hologram (b). The −3 dB width is now 0.59nm, increasing to 1.35nm at −20 dB, i.e. a more rectangular response. This is at the expense of an additional 2.3dB loss, and a reduction in the noise suppression to 18 dB.

BEST AVAILABLE COPY

TS0000535

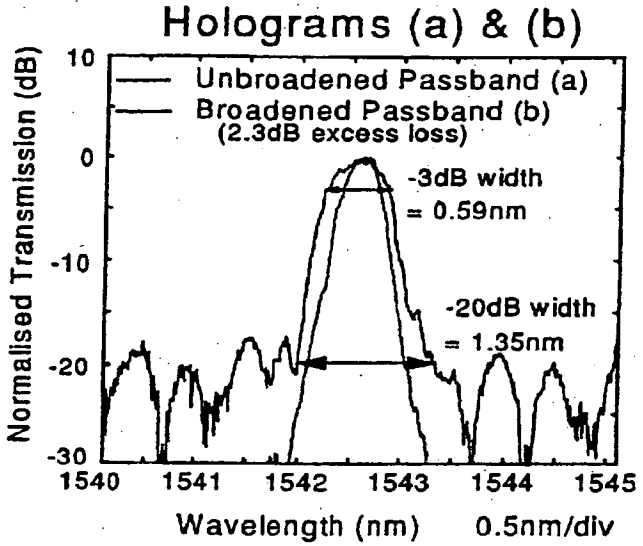

Figure 4: Holographic Filter Passband Apodisation

EDFA Gain Equalisation

Multiple wavelength filtering is one of the distinguishing features of holographic wavelength filtering and is important for WDM demultiplexing and EDFA gain equalisation. Figure 5 shows the transmission of four passbands separated by about 0.8nm. The 3dB width of each passband is still about 0.34nm, and noise supression is generally substantially greater than 8dB, with inter-channel ASE suppression reaching 20dB. Passband uniformity is within 2dB. There is an associated higher loss due to the available light being divided into 4 passbands, and the reduced diffraction efficiency of binary-phase holograms when they function to fan-out light. The average optical *SNR* or channel isolation for a binary hologram is proportional to the number of hologram pixels N, and inversely proportional to the number of filtered channels C, such that:

$$SNR \geq \frac{N}{2C} \tag{1}$$

Thus the SNR performance of a hologram reduces as it is required to control more channels, but improves with more pixels. Likewise, binary-phase holograms show an additional transmission loss of $\sim 10\log_{10}(C)$, when filtering C channels [9], hence the 7.3dB excess loss when filtering 4 channels.

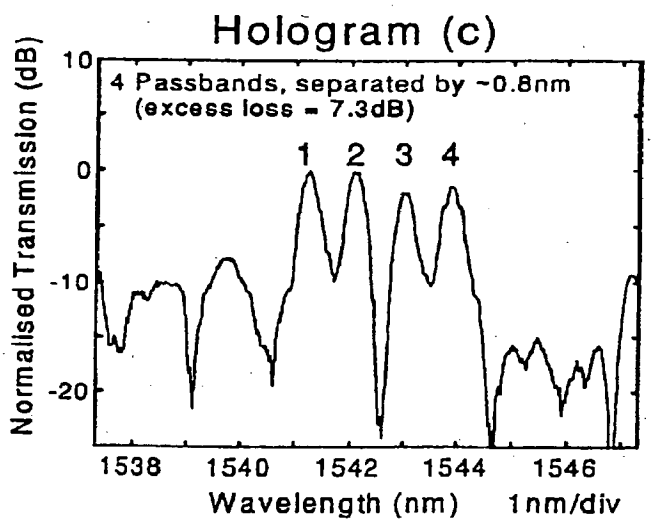

Figure 5: Filtering of 4 WDM channels spaced by 0.8nm

BEST AVAILABLE COPY

TS0000536

Tunable Fibre Laser

Tunable fibre lasers may potentially serve an important function in WDM telecommunications networks, acting as stable and pure laser sources. They have a very narrow linewidth, high output powers and large tuning ranges. We have already published the results of a tunable erbium-doped fibre laser [10], tuned using a holographic wavelength filter. The holographic filter and a high-gain EDFA were placed within a unidirectional fibre ring-resonator. A 3dB coupler was used to access the output power. Tuning over 38.5nm, in the range 1528.6-1567.1nm with steps of 1.3nm was achieved, with output powers of up to -13dBm. The inherent EDFL 3dB lasing linewidth was found to be of the order of 3kHz, and the long term wavelength stability was about 0.1nm. A hologram with a mixed spatial frequency has also been designed to allow the EDFL to simultaneously lase at 1562.5nm and 1556.0nm, as shown in Figure 6. Due to the gain medium being relatively homogeneous and dependent at the two wavelengths, mode competition means that the lasing mode powers fluctuated considerably. The power in each mode is also considerably lower than usual, since only half the EDFA power is available to each mode, the hologram has less than half the usual diffraction efficiency for each of the two wavelengths, and a 10/90 coupler is used for the laser output.

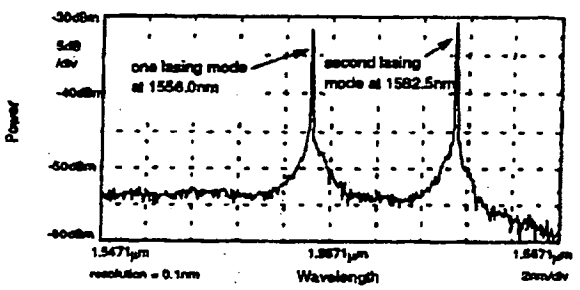

Figure 6: Multiple lasing wavelengths

Future Work

The currently unused extra dimension of the SLM can also be used to add functionality, such as in a space-wavelength switch. This could serve as an add-drop multiplexer (ADM) in dynamic wavelength-routed optical networks. Figure 7 shows an 'exploded' concept for a polarisation-insensitive, optically transparent, compact, low-loss space-wavelength switch, using a reflective FLC SLM. The switch acts as a 3×3 fibre cross-connect, which can also perfectly shuffle wavelengths between the various fibres. The integrated design incorporates a graded-index (GRIN) lens instead of a bulk refractive lens, but the limited numerical aperture of a GRIN lens will tend to limit the number of fibres possible to interconnect. Figure 8 shows how the packaged, integrated device might look.

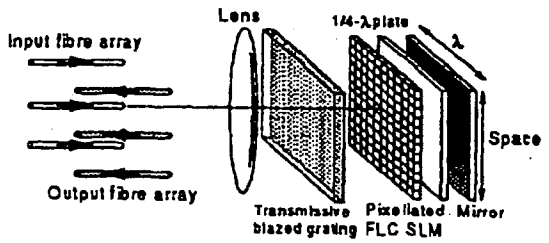

Figure 7: 'Exploded' 3×3 space-wavelength switch

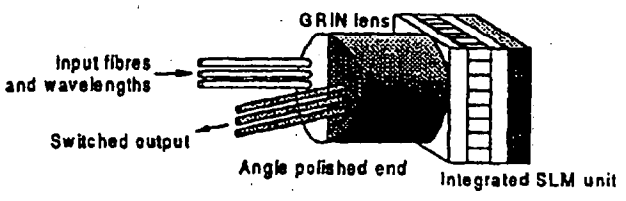

Figure 8: Packaged, integrated space-λ switch

BEST AVAILABLE COPY

TS0000537

Conclusions

In this paper, we have presented holographic filtering as a potential technology for dynamic WDM channel management. Holographic wavelength tuning may also find application in WDM telecommunications systems, where tunable sources, filters and receivers are required. The advantages of holographic tuning are:

- optical transparency
- polarisation insensitivity
- digital, fast (~10μs), low power operation
- fail-safe operation and robustness
- fine resolution over a large wavelength range
- multiple wavelength operation
- low crosstalk

Dynamic gain equalisation, an important issue in WDM networks, has been addressed using holographic tuning. The holographically tunable, multiwavelength erbium-doped fibre laser may also find use as a source in a WDM network. The technique can be used within a holographic space-wavelength switch, allowing arbitrary switching and shuffling of the wavelengths between the fibres.

References:

[1] R.J.Mears, L.Reekie, I.M.Jauncey, and D.N.Payne, 'Low-noise erbium-doped fibre amplifier at 1.54μm', *Electronics Letters*, 23 (19), p.1026-1028, 1987

[2] C.A.Brackett, "Dense Wavelength Division Multiplexing Networks: Principles and Applications", *IEEE Journal on Selected Areas In Communications*, 8(6), p.948-964, 1990

[3] G.R.Hill, "A wavelength routeing approach to optical communication networks", Br. Telecom. Technol. J., 6(3) , p.24-31, 1988

[4] S.T.Warr and R.J.Mears, 'Polarisation-insensitive operation of ferroelectric liquid-crystal devices', *Electronic Letters*, 31, p.714-716, 1995

[5] R.J.Mears, W.A.Crossland, M.P.Dames, J.Collington, M.C.Parker, S.T.Warr, T.D.Wilkinson, and A.B.Davey, 'Telecommunications applications of FLC smart pixels (invited)', *IEEE Journal Selected Topics in Quantum Electronics*, April 1996, p.35-46

[6] A.D.Cohen, M.C.Parker, R.J.Mears, "Active holographic spectral equalisation and channel management for WDM", *OSA TOPS Vol. 12 System Technologies*, p.344-349, 1997.

[7] M.C.Parker, A.D.Cohen, R.J.Mears, "Dynamic digital holographic wavelength filtering", to be published in *IEEE Journal of Lightwave Technology*, July 1998.

[8] A.D.Cohen and R.J.Mears, "Dynamic Holographic Eight-Channel Spectral Equaliser for WDM" *IEEE-LEOS Topical Meeting on WDM Components Technology*, Paper ThC2, Montréal, Canada, August 1997

[9] M.C.Parker, A.D.Cohen, and R.J.Mears, 'Dynamic Holographic Spectral Equalization for WDM', *IEEE Photonics Technology Letters*, Vol. 9, No. 4, p.529-531, April 1997

[10] M.C.Parker and R.J.Mears, 'Digitally tunable wavelength filter and laser', *IEEE Photonics Technology Letters*, Vol.8, No.8, p.1007-1008, August 1996

BEST AVAILABLE COPY

TS0000538

P.D. 04-1996
p. 35-46 = (12)

Telecommunications Applications of Ferroelectric Liquid-Crystal Smart Pixels

Robert J. Mears, *Associate Member, IEEE*, William A. Crossland, Mark P. Dames, James R. Collington, Michael C. Parker, Steve T. Warr, Timothy D. Wilkinson, and Anthony B. Davey

XP-002155684

(Invited Paper)

***Abstract*—Ferroelectric liquid crystal over silicon smart pixels offers potential advantages over conventional electronic and waveguide approaches to telecommunications switching. The role of such smart-pixel architectures in space/wavelength optical interconnect and in high-performance ATM switches based on interconnection of optically accessed memory is discussed.**

I. Introduction

SMART pixels are the subject of considerable interest for telecommunications switching.[1] The purpose of this paper is to review applications of smart pixels based on ferroelectric liquid crystal (FLC) over silicon technology [2]. The large electrooptic effects in liquid crystals and the integratability of large numbers of modulators [e.g., 320 × 240[2]] with the functionality of silicon VLSI gives rise to a number of useful switching applications. The devices discussed employ free-space optics. We review fiber-to-fiber space [6] and wavelength [7] switches that use FLC as phase modulators. We discuss fiber-to-fiber switches[3] and ATM switch structures [9] with optically accessed silicon memories (opto-RAM) [10] that both use FLC shutters in a matrix–matrix [11], [12] configuration.

The ever-increasing bit rate and the economic pressures on network operators to reduce the number of nodes in national networks leads to increasing node complexity and a potential electronic demultiplexing bottleneck. At the same time, the introduction of the EDFA [13], [14] to both submarine [15] and terrestrial routes[4] increases the potential for WDM techniques and wavelength routing in such networks. A schematic view of a future optoelectronic node is shown in Fig. 1. With the possibility of aggregated switch node throughputs of 1 Tbps being required beyond the turn of the century, it would seem desirable, if not inevitable, that much of the transit node traffic will at least be only partially demultiplexed, if at all.

There is a growing need for fiber matrix switches both in association with electronic switches (such as replacements to current digital crossconnects) and ultimately as space-wavelength routing switches. This is represented by the upper part of Fig. 1. Optical transparency is essential for bit-rate independence, and the switching speeds necessary for network restoration and management, route protection, and maintenance are approachable by FLC over silicon technology. Such devices might become an important part of wavelength-routed networks. The photonics group at Cambridge University is actively involved in research into such switches for both national and local area networks as part of the UK EPSRC POETS (parallel optoelectronic telecommunications systems)[5] and OST (optical switching testbed) projects.[6]

The core switch technology represented by the lower part of Fig. 1 is seen as essentially a silicon electronic system, but optical interconnections will clearly be needed to achieve the necessary aggregate capacity. Switch capacities measured in Tb/ps are currently being postulated. Future deployment of public broadband ATM-based services [16] is likely to place severe demands on all-electronic approaches to switch design. While there have undoubtedly been impressive efforts in the density of gates achievable on silicon, this has never been matched by the performance of the metal-based interconnect between chips, either for multichip modules or backplanes. Since an ATM switching fabric requires a considerably higher degree of interconnectivity than that necessary for circuit switching, electronic interconnectivity is identified as a severe limitation of present approaches to broadband switch design. A

Manuscript received June 14, 1996; revised July 12, 1996. This work was supported in part by the UK EPSRC under the POETS and OST Research Grants, Nortel, and the DTI.

R. J. Mears, J. R. Collington, M. C. Parker, S. T. Warr, T. D. Wilkinson, and A. B. Davey are with the Cambridge University Engineering Department, Cambridge CB2 1PZ, U.K.

W. A. Crossland is with the Cambridge University Engineering Department, Cambridge CB2 1PZ, U.K., and he is also a Nortel Research Professor of Photonics.

M. P. Dames is with the Cambridge University Engineering Department, Cambridge CB2 1PZ, U.K., on sabbatical leave from BT Laboratories, Martlesham Heath, Ipswich, Suffolk IP5 7RE, U.K.

Publisher Item Identifier S 1077-260X(96)07968-3.

[1] See, for example, [1] and this issue.

[2] A 320 × 240 array of modulators on a 14-mm silicon chip is currently being built under DRA Contract MAL 1b/2256. See also [3] (176 × 176 modulator array) and [4], [5] (256 × 256 array).

[3] The OCPM project (optically connected parallel machines) is a collaboration between British Aerospace (Sowerby Research Centre), BNR Europe (Nortel), Herriot Watt University, the University of Bath, and Thorn EMI CRL. Work at BNR Europe was subcontracted to the Engineering Department at the University of Cambridge. The project was coordinated by British Aerospace and was funded in part by the DTI and EPSRC. (DTI Reference No. IED2-430-30-004) See also Final Report: OCPM-039 013-ADM-BAe-HW 960223 and [8].

[4] For example, MCI/Pirelli link between Chicago, IL, and Salt Lake City, UT.

[5] Parallel Optoelectronic Telecommunications Systems (POETS), UK EPSRC GR/J44773. The POETS project involves Cambridge University (coordinator), King's College, London, and University College London.

[6] Optical Switching Testbed UK EPSRC GR/J44728 (Cambridge University Engineering Department and Computer Laboratories).

BEST AVAILABLE COPY

AR

TS0000539

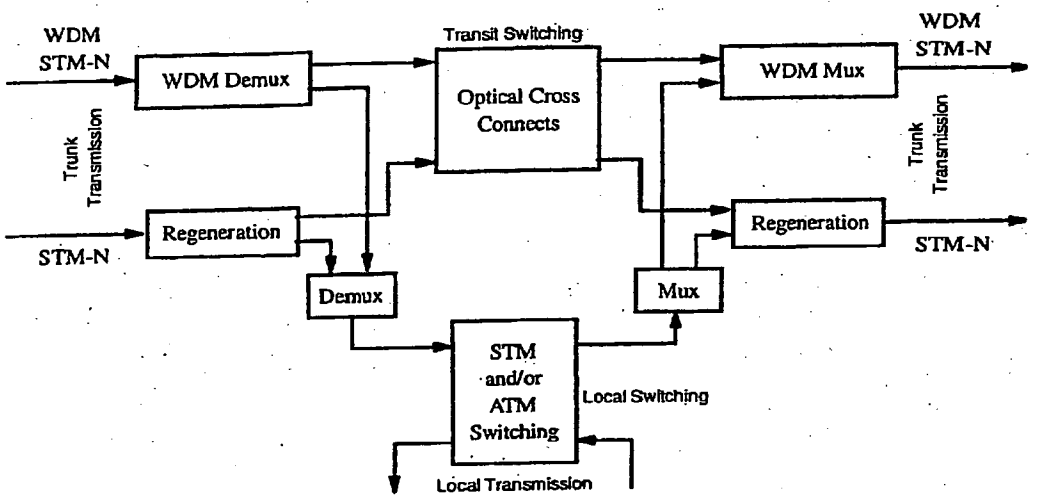

Fig. 1. Schematic of a possible future optoelectronic node.

free-space optically assisted approach to an ATM switch fabric may help by using its inherent spatial bandwidth to increase the connectivity and reduce the limiting effects of buses, low pin-out integrated circuits, printed circuit boards, and multichip modules. Unless overcome, such pin-out limitations can result in suboptimal system partitioning and architectures. Previous important attempts at harnessing free-space optics have been technologically limited to a small switch node functionality as well as low fan-out [17]. Such a limitation has the effect of increasing the number of stages of switching necessary to produce a suitably connected fabric.

In contrast to the many attempts at alleviating interconnection bottlenecks by the selective replacement of electrical connections with on-board optical equivalents [18], we have adopted a fresh approach to the problem in an attempt to understand how a hybrid optoelectronic approach may fundamentally affect the design of an ATM switch fabric from a theoretical performance as well as an interconnection perspective. Clearly, any successful approach must partition the optics and electronics in a befitting manner. Such partitioning has already been described within the context of multiple-quantum-well devices [19]. FLC over silicon opto-RAM [10] allows the incorporation of a degree of optical switching to assist the electronic switching. Some of the available optical parallelism must be used to obtain a high enough chip-to-chip transfer rate due to the modest switching speed currently available from this form of light modulator. However, chip-to-chip transfer rates are ideally matched to the read/write times of silicon VLSI structures, rather than the data rates of the incoming links.

II. FLC over Silicon Smart-Pixel Technology

The addition of a thin layer of ferroelectric liquid crystal to standard CMOS silicon yields an optoelectronic technology that boasts the versatility of VLSI with massively parallel optical input/output [2]. Photodetectors can be implemented within CMOS design rules and the very large electrooptic effects of the liquid crystal enable the implementation of both intensity and π-phase modulators (see Section III). A

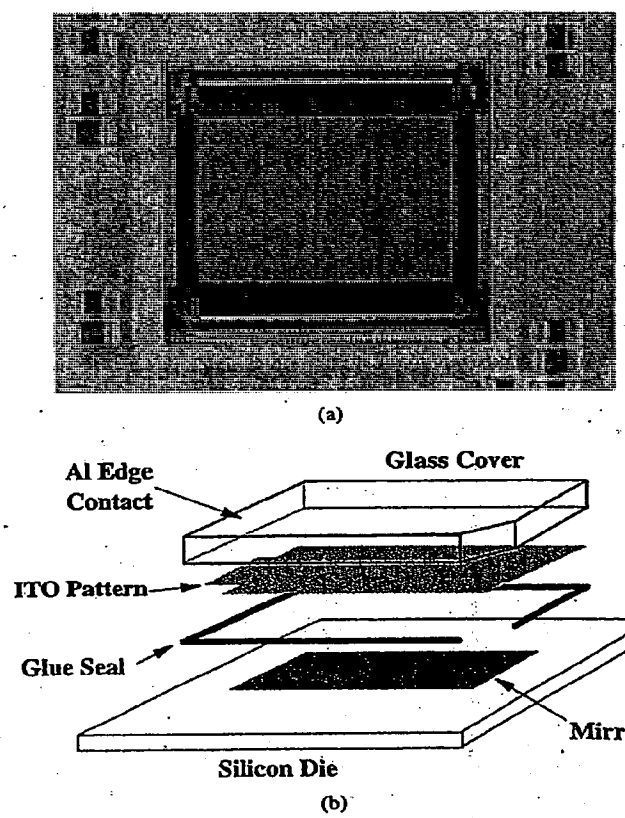

Fig. 2. FLC on silicon technology.

schematic construction of a smart-pixel device and a photograph of a recently designed 320 × 240 modulator chip are shown in Fig. 2.

The modulator bandwidth is a function of the required electrooptic effect and the permissible driving voltage. A recent optical interconnect project, optically connected parallel machine (OCPM), demonstrated intensity shutters with a reconfiguration time of less than 20 μs at 45 °C using addressing voltages of 10 V [8]. The fastest reconfiguration time for

BNSDOCID: <XP 2155684A I >

TS0000540

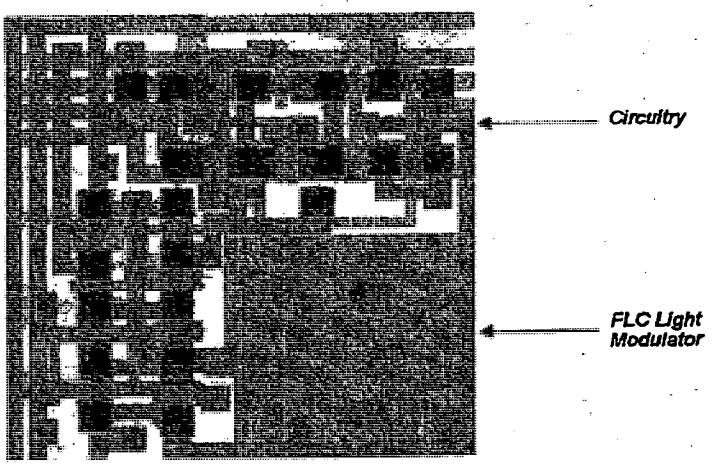

Fig. 3. Opto-RAM cell (single pixel).

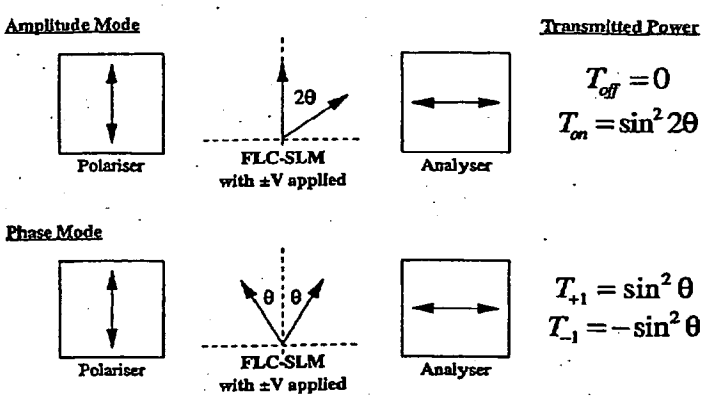

Fig. 4. Modulation schemes for FLC smart pixels.

intensity modulation suitable for interconnect is extrapolated to be about 1 μs at 80 °C [20]. To achieve efficient phase modulation, a larger switching angle of up to $\pi/2$ radians is required [21]. For fields of 10 Vμm^{-1} or less, this limits the switching times for currently available materials to the order of 400 μs at 45 °C but times below 40 μs have been obtained at 80 °C [22]. Switching down to 200 ns has been observed for much smaller switching angles ($\leq 2°$) in electroclinic liquid crystals [23]. While the implied lack of contrast/loss would probably make electroclinic LC's unsuitable for optical interconnect, they do have promise for signaling modulators in architectures such as the opto-RAM. The driver circuitry can be as simple as a single transistor (DRAM), so that given a small-geometry CMOS process, the limiting smart pixel packing density will be the optical input/output (photodiode/modulator) geometry, even for relatively complex pixel logic. The layout for an experimental optical read opto-RAM memory pixel is shown in Fig. 3.

The pixel shown in Fig. 3 is on a 70-μm pitch with a modulator size of approximately 30 μm. The large dimensions are due to the 2.0-μm CMOS used and to allow a large read beam to simplify alignment in our experimental system. As liquid crystal technology matures and switching voltages decrease, it will be possible to reduce the process geometry. Also, as the optical beam used to illuminate the modulator becomes closer to being diffraction limited, then the modulator will be of order 5 μm. Previous work has focused two beams into a 6-μm× 20-μm area [24], although with ferroelectric liquid crystals only one beam is required. This is because the transmission of a reference beam is not required due to a high contrast ratio alleviating any problems associated with variations in receiver threshold over the area of a die. Therefore, feasible pixel pitches will be of order 15 μm with the die size approaching 20 mm. (Crosstalk considerations suggest a limiting pixel pitch of about 8 μm [11]). This will allow for at least 10^6 pixels per single chip.

III. Liquid-Crystal Modulation Schemes

Ferroelectric liquid crystal modulators can be configured as either phase or intensity modulators and drive schemes can be chosen for continuous or synchronized read-out [25]. The choice of modulation and drive scheme have important consequences for smart-pixel system design. The thin layer of (surface stabilized) ferroelectric liquid crystal can be optically modeled as a rotatable waveplate with fast and slow axes in the plane of the modulator, i.e., perpendicular to the direction of light propagation. The alignment layers are usually chosen so that the crystal will lie in one of two bistable states such that there is an angle of 2θ between the fast axes of the two states where θ is known as the tilt angle of the crystal. Application of an electric field is required to switch from one state to the other and the field must be reversed to switch back. The ferroelectricity (spontaneous polarization) of the LC implies that charge needs to be transferred to and from the crystal—too little charge will result in incomplete switching. To ensure long lifetime of the crystal, charge balancing should also be maintained. Interconnect applications demand a drive scheme which permits continuous viewing. The preferred scheme for the smart-pixel architectures uses an alternating front electrode (ITO on glass) voltage. Thus, depending on the phase of the silicon pad voltage, an FLC field is produced which, in one half cycle, switches pixels needing to change from state 1 to state 2 and, in the next half cycle, those changing from state 2 to state 1, otherwise leaving a net zero voltage across the crystal so that pixels not needing to change are left unaltered.

The schemes for intensity and phase modulation are depicted in Fig. 4. A fuller description may be obtained from Jones' matrix analysis [26], but a more qualitative description is adopted here.

Perhaps the key difference between intensity and phase modulation, which has only been fully elucidated relatively recently [27] is that, to obtain high contrast, intensity modulation is polarization sensitive, requiring crossed polarizers at the input and output, and therefore, polarization control of the source. However, when phase modulators are used to form a (binary) phase grating or hologram, the relative modulation between pixels in alternate states is always π radians irrespective of the input polarization. Thus, in the output plane, there will be a central (zero-order spot) whose intensity will vary as $\sin^2(2\theta)$

$$I(\text{zero order}) = I_o\left[1 - \sin^2(2\theta)\,\sin^2\frac{\delta}{2}\right] \qquad (1)$$

TS0000541

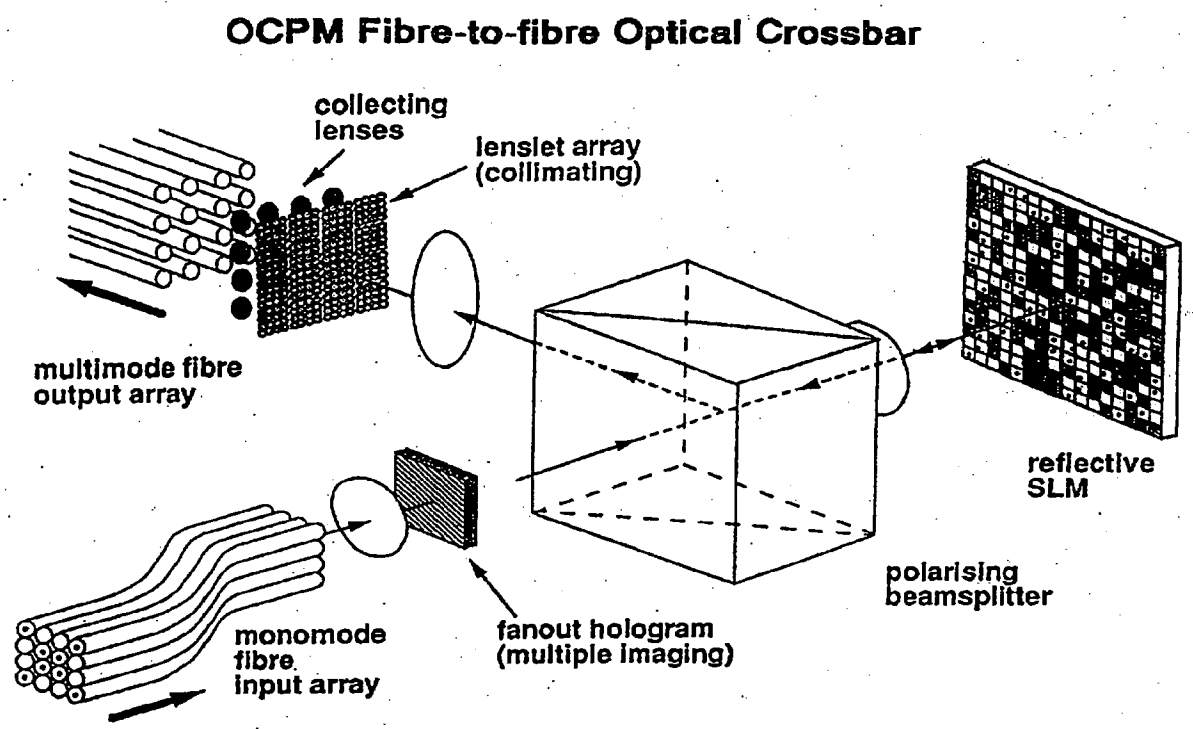

Fig. 5. The matrix–matrix intensity crossbar.

where I_o is the incident intensity and δ is the optical path difference between the fast and slow axes expressed in radians) and the intensity of the diffracted spots will be independent of the input polarization. It is this unique feature which enables the design and implementation of optically transparent beam-steering switches for telecommunications systems. Furthermore, the attainment of binary phase is wavelength independent, being essentially a symmetry property. Thus, the phase holograms can be expected to be broadband, the only limitation being the unavoidable shifts in spot position from the wavelength dependence of diffraction.

IV. Space-Switch Architectures

A. Matrix–Matrix Intensity Switches

The majority of implementations of optical switches using FLC have been of the full crossbar architecture, since the use of free-space optics permits high fan-out and fan-in. The OCPM demonstrator, for example, uses an input array of 64 single-mode high-birefringence fibers and an output array of 64 multimode fibers. The interconnect is based on the matrix–matrix principle [11], [12] with holographic fan-out and fan-in. The matrix–matrix crossbar makes more efficient use of the numerical aperture than, for example, the vector-matrix multiplier [28]. As it performs a full crossbar function it allows both broadcast and multicast. A schematic of the matrix–matrix crossbar is shown in Fig. 5. The critical performance parameters are the loss (and scaleability), isolation/crosstalk, and the ease of implementation of the routing algorithm.

1) Loss: Fan-out losses of $1/N$ are unavoidable through the replication of the inputs to achieve the full crossbar function. Holographic replication can be achieved with low excess loss (~1 dB) [29] at the expense of making the switch relatively narrow-band (~ ±1 nm). For the matrix–matrix crossbar, the fan-in losses are reduced by the use of multimode fiber but would scale as $1/N$ if single-mode output were required. A single-mode fiber-to-multimode fiber loss of 28 dB was achieved in the first prototype 64 × 64 switch against an intrinsic fan-out loss of 18 dB.

2) Isolation: The isolation that can be achieved is directly related to the intensity contrast of the individual FLC pixels. There is usually a single pixel acting as each crosspoint. A single port isolation of 16.6 dB was measured in the OCPM demonstrator, which was dominated by the poor 40:1 contrast ratio of the SLM. With better quality mirrors, it is reasonable to expect a contrast of 25–30 dB to be achievable with FLC over silicon devices.

3) Control and Arbitration: The use of a single-stage crossbar architecture with intensity pixels acting as single crosspoints permits the trivial routing algorithm: open the requisite pixel to make the connection. Likewise, arbitration requires that only one pixel in a block associated with each output is open at one time.

For applications where polarization control of the source fibers is permitted and where multimode fibers can be used, the single-stage matrix–matrix crossbar remains attractive for moderate switch sizes. The OCPM 64 × 64 demonstrator was tested at 270 Mb/ps at 10^{-12} BER using 3 mW in fiber laser power at 800 nm. An existing optical design suggests a 33-dB power budget at 2.5 Gb/ps with a +3 dBm source and −33-

BNSDOCID: <XP 2155684A 1 >

TS0000542

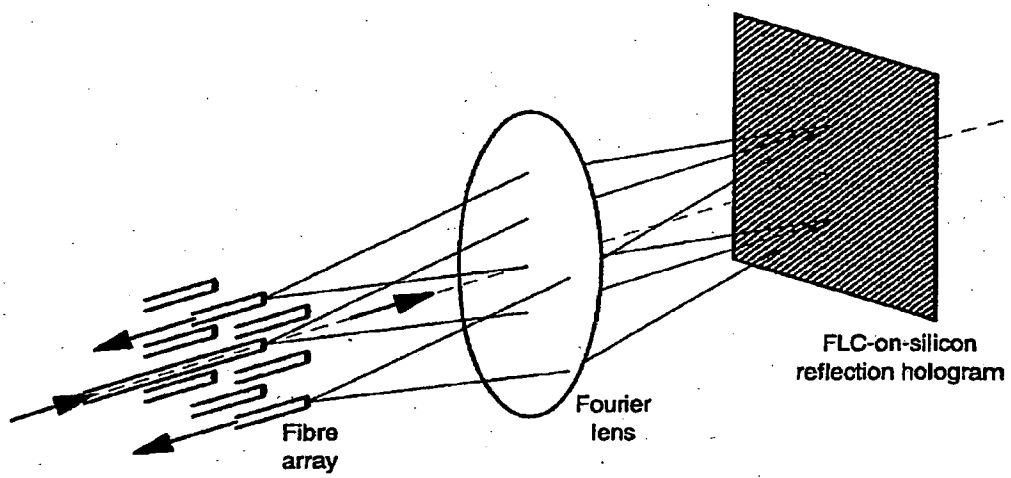

Fig. 6. Schematic of one possible implementation of a holographic crossbar.

dBm receiver with an excess loss of 7.5 dB over the intrinsic fan-out losses. Subject to the acceptable contrast, these figures would support a 144 × 144 crossbar at 10^{-12} BER.

B. Holographic Beam-Steering Switches

Since the first proposal for FLC on silicon modulators to be used as (binary) phase holograms for optical interconnect [30], [31], there has been much debate over their best configuration for switching. The architectures and implementation differ from the polarization-dependent, intensity-based matrix–matrix crossbar in a number of important respects. First, the use of groups of phase pixels associated with each input permits beam-steering architectures. Although a single-stage crossbar can be implemented, it is more power- and crosstalk-efficient to use a two-stage architecture such as the deflector-selector [32]. The fan-out of a single stage is determined by the space-bandwidth product (number of pixels) and the physical dimensions of the output fiber array. Clearly, if the fan-out does prove a limitation for very large switches, then banyan, Clos, or other architectures might be employed, with a concomitant increase in the complexity of control and arbitration. However, single-stage dynamic fan-out of 1:64 or 1:128 appears technologically feasible—routing on array sizes of this dimension has been demonstrated in the laboratory, but not yet to single-mode fiber arrays. A schematic of one mode of interconnection for a $1 : N$ switch using a FLC silicon backplane is shown in Fig. 6.

1) Loss: The loss of a single $1 : N$ or $N : 1$ stage is predominantly a function of the efficiency of the beam-steering FLC phase hologram. Binary phase holograms, because of the output plane symmetry, incur a loss to a single spot of about 4 dB. This may not be so severe if it is remembered that the symmetric spot might be usefully employed to provide redundancy.

Free-space single-mode to single-mode fiber losses of 2–3 dB have been observed in simple laboratory switch rigs. The other potential source of loss is the use of nonoptimal FLC switching angle and thickness. While this has hampered experimental demonstrations to date (typically incurring a 6 dB penalty), new FLC materials such as low molar mass siloxanes [22] have been shown in the laboratory to obviate this penalty.

2) Isolation: Unlike the matrix–matrix crossbar, the isolation of the holographic beam-steering switch is not so critically dependent on the liquid crystal alignment, since binary-phase operation is assured. Rather, it is dependent on the number of pixels associated with the beam-steering hologram and residual scattering losses. A crude estimate for the single-port isolation is [33] is

$$\text{Isolation} \sim 10 \log_{10} \left[\frac{m\eta}{2(1-\eta)} \right] \text{dB} \qquad (2)$$

where m is the number of pixels in the routing hologram and η is the hologram efficiency. Equation (2) assumes that power is distributed evenly over the output plane away from the desired spot. Various solutions can be theoretically determined which dramatically reduce the power at other fiber positions than the desired output [34], [35]. However, experimentally determined isolation to date has yielded figures more closely in agreement with (2) (typically 25–35 dB). For example, the fiber switch reported in [27] has a fiber-to-fiber loss of 13 dB and an isolation of 35 dB for a 64 × 64 routing hologram. Of course, in the deflector-selector architecture, the single-stage isolation will be squared (per input port), i.e., 50–70 dB. Such figures are compatible with the stringent requirements on crosstalk for optically transparent [36] and particularly for wavelength-routed systems [35].

3) Control and Arbitration: For a $N \times N$ switch (or each $1 : N$ or $N : 1$ switch), N different routing holograms will be required. These are of course determined during the switch fabrication. Irregularities in the fiber array can be built into the hologram design, and the precise holograms can be optimized *in situ* [37]. As an example, the 1:16 experimental fiber switch shown in Fig. 7 used a series of search holograms to determine the core positions of the fibers in the array and hence the optimum hologram set. It is envisaged that further monitoring and optimization should be possible during the lifetime of the switch. It should be possible to extend the FLC over silicon smart-pixel technology to incorporate the (digital) hologram patterns in on-chip memory (a 1:64 module would

TS0000543

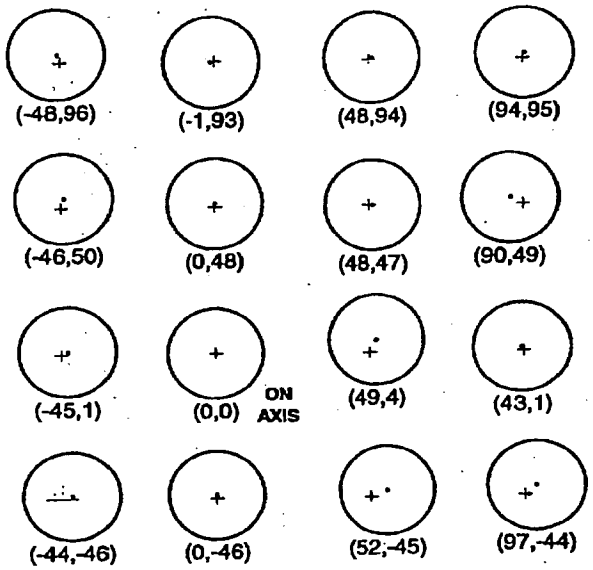

Fig. 7. Fiber array alignment for holographic 1:16 interconnect.

require about 500 kB). Like the crossbar, the fully connected deflector-selector has a straightforward routing algorithm.

V. Wavelength Routing

The diffracted spot positions in the beam-steering switch are of course wavelength-dependent. The relatively large FLC pixel dimensions compared to the wavelength lead to small diffraction angles and the need to pack output fibers closely together if larger dimension switches are to be achieved. The wavelength sensitivity depends on the tolerance of the output fiber launch efficiency to lateral displacements. To a first approximation, the ratio of this tolerance to the actual deflection (i.e., displacement of the fiber core from the zero-order optical axis) is equal to the ratio of the bandwidth to the wavelength. Thus, at a telecoms wavelength of 1.55 μm, a tolerance of ± 5 μm yields a bandwidth of 30 nm for a 500-μm displacement. The need for compact fiber arrays is thus important for large dimension switches if a broad bandwidth is to be maintained. On the other hand, the small wavelength dependence can be turned to advantage to form a wavelength filter if a larger deflection angle is used. This can be achieved by concatenating a fixed phase grating of higher spatial frequency with the FLC device. The resultant filter is tuned by changing the digitally generated FLC binary phase hologram—hence, a digitally tunable wavelength filter [7], [38]. Fig. 8 shows the layout of an experimental filter using a transmissive FLC SLM at a wavelength of 1.5 μm. The filter is tunable in steps of 1.3 nm over more than 80 nm at 1.5 μm with a FWHM bandwidth of 2 nm. The step and bandwidth are both functions of the physical layout and can be optimized for other applications. They were chosen here to reflect a view of the likely future channel spacing in commercial WDM systems. An overall fiber-to-fiber loss of 22 dB was due to the small switching angle of the FLC in the SLM and the large diffraction losses associated with

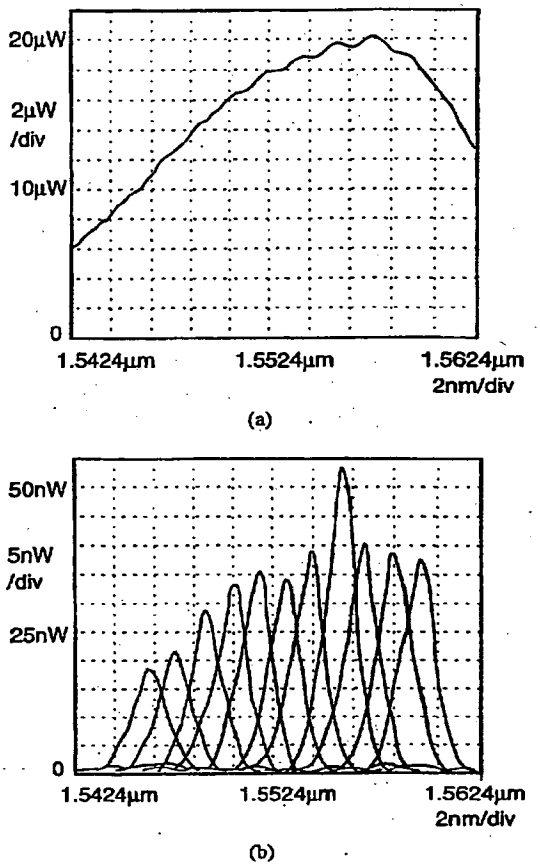

Fig. 8. Wavelength filter tuning characteristic.

the experimental fixed (binary) phase grating. With the full switching angle and a commercial low-loss phase grating, the filter should have losses of less than 10 dB. Although the current losses associated with FLC phase holograms prohibit a competitive filter, the tunability and reproducibility of the wavelength filter makes it an attractive prospect for the future. It is also possible to design multiple wavelength multiplexers and demultiplexers based on the passive designs described in [39]. By combining active or passive WDM splitters with holographic space switches, it is possible to create flexible optical routers with crosstalk performance which outstrips acoustooptic tunable filters (AOTF) [40].

The digitally tunable filter can be put inside a laser cavity to yield a precisely controllable WDM source [41]. Fig. 9 shows the discrete tuning of such a laser in 1.3 nm steps across the erbium window at 1.55 μm. A long-term stability of 0.1 nm (monitored over four hours) was limited by the mechanical instability of the laboratory rig and would be considerably improved by a solid glass (e.g., GRIN) interconnect. The short-term linewidth (measured by a self-heterodyne technique for a ring laser configuration) is of the order of 1 kHz.

VI. Opto-RAM Technology

Many of the proposed optical information processing and interconnection systems involve interaction and exchange of data between spatial light modulators and silicon electronic

TS0000544

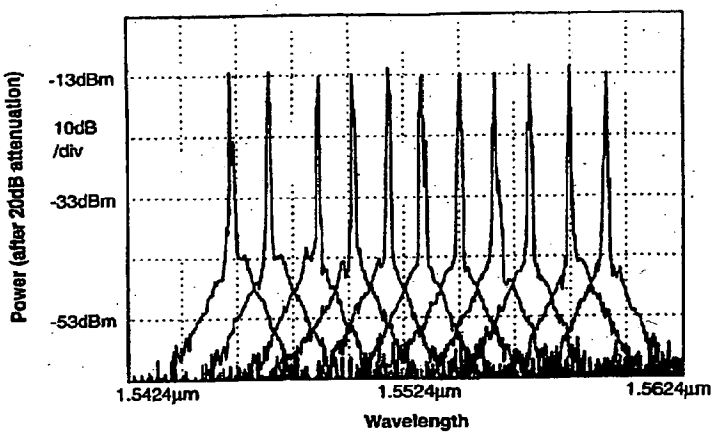

Fig. 9. Digitally tunable laser characteristic.

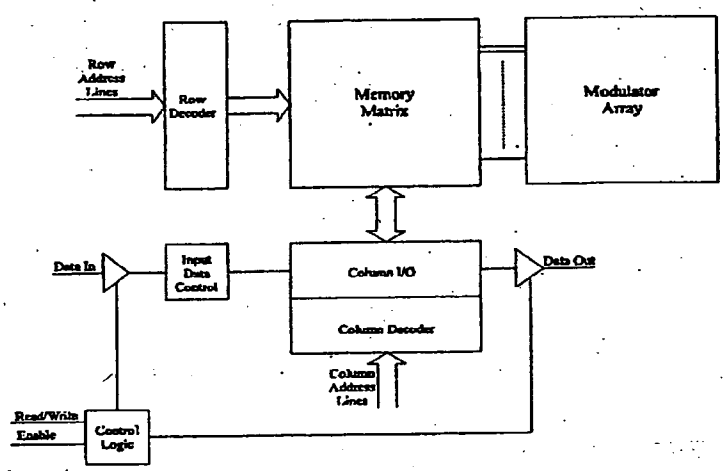

Fig. 10. Block diagram of an optically accessed memory (optical-read).

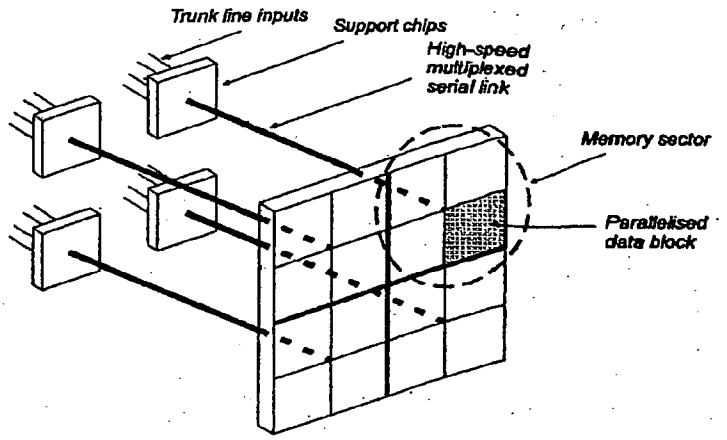

Fig. 11. Use of peripheral chips to support a sectorized opto-RAM.

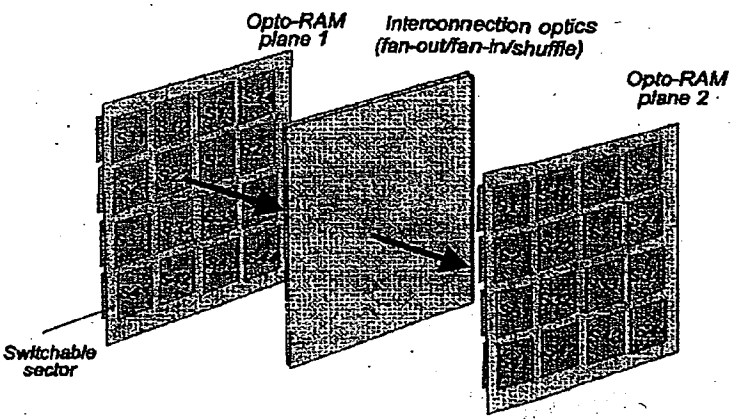

Fig. 12. Free-space optical interconnection of two planes of opto-RAM smart pixels.

memory. A generic component in these applications might be an "opto-RAM," i.e., an optically accessed electronic memory which: 1) optically presents/receives parallelized data images to/from a high fan-out free-space optical network and 2) performs electronic rearrangement within memory sectors [10]. The internal circuitry of opto-RAM is almost identical to a standard VLSI CMOS RAM, with the exception of the addition of opto-electronic transducers to modulate/detect light when optically reading/writing the memory. Fast memory access times are ~1–10 ns per word. The modulator/detector rate can be matched to the number of words on the opto-RAM multiplied by the access time, i.e., a switching rate of the order of 10 μs, which is well suited to FLC technology. This could enable very fast block data transfer to be made between areas of memory and even spatial processing (such as block switching or optical transformation of data [42]) to be carried out within the optical interconnect. A classic connection intensive application of this type is in (core) telecommunications switching.

Fig. 10 shows a block diagram of a complete optical read opto-RAM, where no sectorization has been shown for clarity. The electronic circuitry of the memory is identical to a VLSI CMOS electronic memory (with address and data buses being the main inputs) however a modulator array has been added to allow for optical read. Each bit of storage has its own modulator. The equivalent optical write opto-RAM incorporates an integrated silicon photodetector [43], rather than a modulator, for each bit of storage. Such photodetectors have been successfully operated at 224 Mb/ps [43].

Fig. 11 shows the operational configuration of an optical read opto-RAM, showing 16 parallelized data images optically presented to the free-space optical center stage. The opto-RAM has been partitioned into four sectors due to addressing constraints. Such constraints arise due to the aggregate data rate to/from a device exceeding the rate at which a single memory may be addressed. Sectorization therefore allows the opto-RAM to be scaleable with future requirements. Each sector has its own data and address buses which are independent of other sectors. Data coming in on a particular trunk link, which could be a high-speed fiber serial multiplex (e.g., STM-16), may only be written into an area in the memory sector addressed by the associated support chip. The support chip writes data into the opto-RAM at a suitable location as defined by the address of that location. Suitable locations are defined as locations which can be optically switched, by the free-space optical switch, to free locations on the output links. This results

TS0000545

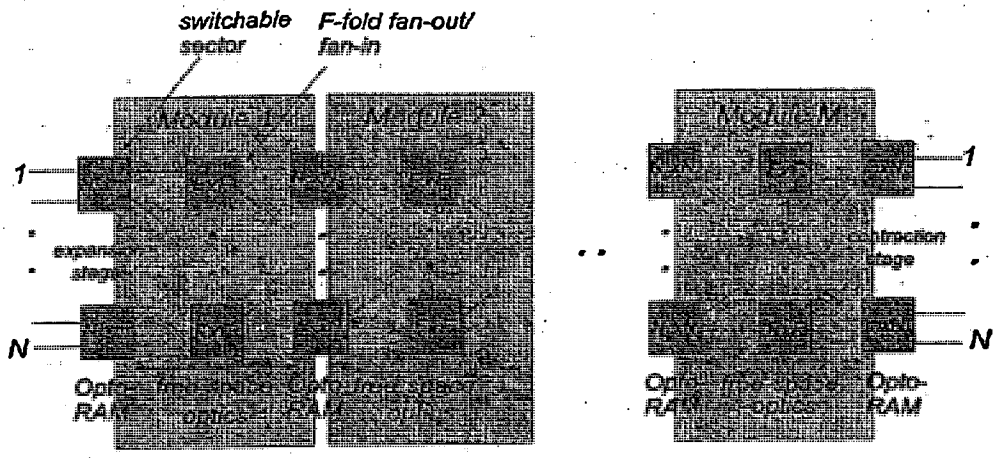

Fig. 13. Model for interconnected opto-RAM planes using F-fold fan-out/fan-in and shuffle.

in the support chips being responsible for part of the switch arbitration. Output links are also accessed by a similar opto-RAM structure. Each support chip must therefore be able to determine the output locations which have already been used. The support chip accesses the address bus of the opto-RAM sector it is writing to in order to specify the correct spatial position and then writes the data to that location. Data may be in the form of a multiplicity of bits presented in parallel as an image to the optical switch, where in the limit this parallelism could be an entire ATM cell (approximately 400 bit).

VII. Generalized ATM Switch Architecture

We have explored the tradeoffs which exist between the degree of interchip optical fan-out/fan-in versus on-chip opto-RAM sector functionality for interconnecting two planes of opto-RAM in a manner suitable to meet ATM switching connectivity requirements. A suitable interconnect for ATM switching must meet certain criteria.

1) It must (in principle) be technologically and practically realizable.
2) It must provide acceptable connectivity and hence cell-loss probability.
3) A path-hunting mechanism for routing ATM cells from input opto-RAM plane to output opto-RAM plane must be able to be carried out within the time limits imposed by ATM (for STM-1 input lines at 155 Mb/ps, this imposes a minimum cell period time restriction of 2.7 μs to find all the paths through the fabric if only one cell per channel is switched per distribution period, up to a maximum of 256 μs set by the permissible latency per node).

As an example, Fig. 12 schematically shows an opto-RAM plane partitioned into a number (16 shown here) of independent, switchable sectors.

The performance of a variety of interconnection options may be assessed using the generalized interconnection model shown in Fig. 13. This shows a number of modules, where each module consists of two opto-RAM planes interconnected by an optical fan-out/fan-in/shuffle. It will be assumed that in general M modules will be required to give sufficient

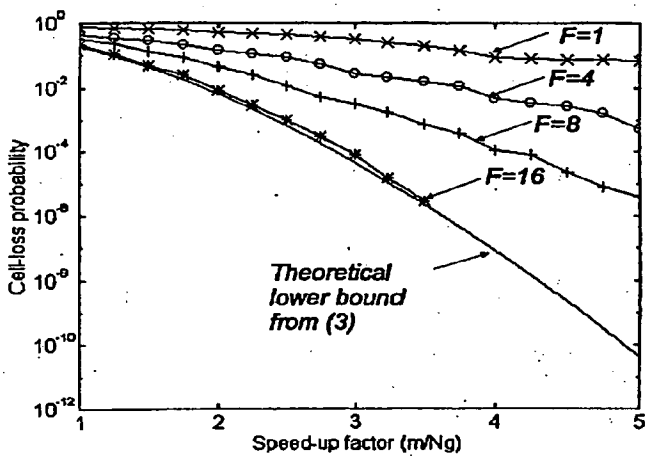

Fig. 14. Effect of speed-up factor (m/N_g) on cell-loss probability for $N = 64$, $N_g = 4$ for fan-outs $F = 1, 4, 8, 16$ for uniform traffic.

connectivity between the N inputs and N outputs. It should be borne in mind that it is desirable to limit the number of stages as failure to do so can lead to practical difficulties with the opto-mechanics. The input opto-RAM plane is assumed to be sectorized such that each sector may receive N_g ATM cells and electronically write them to any of m memory locations (i.e., each sector is effectively an $N_g \times m$ crossbar switch). By ensuring $m > N_g$ (i.e., the first stage acts as an expansion stage), the designer may dilate the network and hence build in sufficient paths such that any internal blocking may be reduced to acceptable levels. Clearly, a contraction stage will be required at the output stage of the network.

Topologically speaking, each opto-RAM plane is connected to a center-stage switching plane composed of a number of $F \times F$ crossbar switching elements. It is proposed that the $F \times F$ switching operation and the shuffle required to connect these switches to the opto-RAM planes on either side is realized optically by a space-invariant F-fold fan-out/fan-in operation using a computer-generated hologram followed by a shuffle. A space-invariant operation involves an operation where the same operation is carried out on all beams (in contrast, a space-

TS0000546

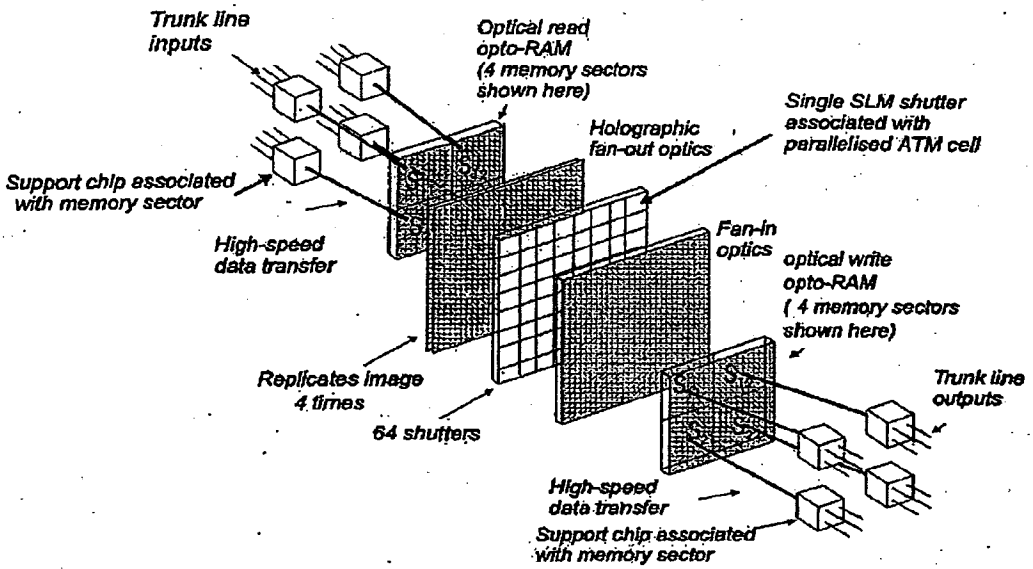

Fig. 15. Three-stage ATM switching fabric (16 × 16 shown for clarity), with $F = N_g = 4$.

variant operation allows a completely arbitrary interconnection pattern to be carried out on the various beams). Space-invariant operations are well matched to the capabilities of optical components such as lenses, mirrors, and holograms, and are relatively easy to implement (space-variant operations require much more complex optical implementations that often result in low interconnection density and high cost). The effect of employing differing degrees of fan-out/fan-in F for given values of N_g and m (since in general each of these parameters will be subject to a technological constraint) will be explored. Cell-loss probability between the two planes for uniform ATM traffic may be used as the means of comparing differing options.

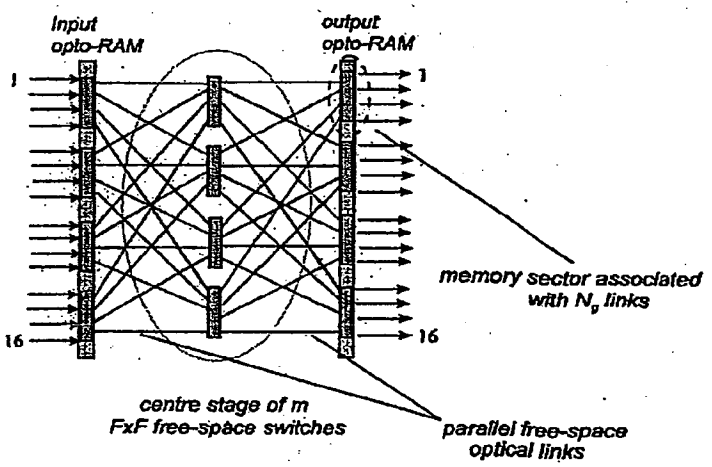

Fig. 16. Clos representation of Fig. 15.

A. Queuing Strategy

Of considerable interest is the ability to queue cells on the output, since this is known to provide the best possible throughput and delay performance for ATM traffic [44]. Such an approach requires sufficient dilation (i.e., expansion) of the fabric to allow many cells to address a particular output without blocking. It is possible to provide this dilation by adding extra memory locations to the input-stage opto-RAM. Such dilation does not affect the fan-out/fan-in required, but merely the size of the image to be fanned in/out.

Output queuing is assisted by the sectorization of the opto-RAM. From the model of Fig. 13, we can see ATM cells only have to route themselves toward a particular output sector rather than a particular port associated with that sector. Any subsequent contention for ports when cells have successfully arrived at the memory sector is taken care of by queuing cells in memory associated with the output sector. As the sector size becomes large, the law of large numbers helps to reduce the statistical variation in the number of cells addressing a particular sector. This has the beneficial effect of reducing the degree of dilation required within the network. The theoretical lower bound for the cell-loss probability when m links feed an output sector of size N_g (i.e., the $m \times N_g$ contraction stage in Fig. 13) may be calculated by assuming that all m of these links may be reached by cells when required (clearly, this is not the case in general due to internal network blocking). Hence, the lower-bound cell-loss probability is the ratio of the mean number of cells which are lost per sector per arbitration due to a number of arrivals exceeding m, divided by the mean number of cells which are addressed to that sector [45], shown as

$$P_{loss} = \frac{1}{N_g \rho} \sum_{j=m+1}^{N} (j-m) \left(\frac{N_g \rho}{N}\right)^j \left(1 - \frac{N_g \rho}{N}\right)^{N-j} \quad (3)$$

where ρ is the mean occupancy of the incoming links to the switch. This is a lower bound since it may well be that, despite there being m memory locations feeding a particular opto-RAM sector, internal blocking may occur in attempting to fill these free locations. Such internal blocking (not to be confused with output port contention) may be reduced by implementing a higher fan-out/fan-in value F, or indeed by further increasing

TS0000547

m. Alternatively, an extra stage may be added to increase the number of available paths.

Fig. 14 plots the results of computer simulations to determine the cell-loss probability for various dilations for a 64×64 switch where $N_g = 4$, $F = 1, 4, 8, 16$, $M = 1$, and $\rho = 1$. When $F = 1$, no center-stage switching is actually occurring, only a shuffle existing between the two opto-RAM planes. The continuous curve represents the theoretical lower bound as given by (3). The effect of increasing fan-out is to reduce internal blocking within the switch for a given dilation. The interesting point to note is that the cell-loss probability almost reaches its lowest-bound value when $F = 16$. This corresponds to a Clos topology. The small difference is attributable to the use of the suboptimal arbitration algorithm employed which picks possible free paths at random. Increasing the fan-out further to $F = 64$ (and thereby no longer making use of the switching within opto-RAM sectors) will have the effect of removing the small arbitration loss term entirely, though clearly at the expense of a more demanding optical system. $F = 4$ corresponds to a banyan network, widely known to be blocking.

B. Three-Stage ATM Switching Fabric

A particular case that we have proposed as an attractive approach to the construction of a large ATM switching fabric is a three-stage switching configuration [9], shown in Fig. 15. The first stage of switching is achieved using an optical-read optically accessible memory. Its input comprises a high-speed synchronous multiplex of a number of ATM links, while its output comprises a spatial multiplex of ATM data, suitably parallelized in to data images to match the modulation speeds of ferroelectric liquid-crystal technology and the available parallelism of the optical system. This spatial multiplex may now be optically presented to a free-space crossbar, where the central switching function of the data images is carried out. The outputs of the free-space crossbar are subsequently written to an opto-RAM configured for optical write, where the third stage of switching of the three-stage operation is carried out. For a crossbar of dimensionality $F \times F$, where each input comprises a spatial multiplex of N_g parallelized ATM links, the overall switching dimensionality of the three-stage network shown in the figure is clearly $(F \times N_g) \times (F \times N_g)$. It is proposed that the central optical switching function be carried out using a free-space optical crossbar [46]. The fan-out required is equal to the number of high-speed synchronous multiplexes feeding the crossbar, namely F. Fig. 16 shows the same switch redrawn to show the functional equivalence to a three-stage Clos network.

C. Scaleability of Three-Stage Switching Fabric

The feasible data rate that could be transferred off such a smart-pixel device (for 10^6 pixels and 1 μs switching) approaches 1 Tb/s. For an $N = 1024$ port switch, and assuming approximately equal partitioning between electronic and optical switching, there are approximately 30 000 switched channels in the interconnect plane. In the case of a LC switching time of 100 ns, it would be appropriate to switch cells of approximately 50 bit wide. This would require approximately 10^6 resolvable points in the interconnect plane. Such a system places a demanding requirement upon the optical system, but one which we believe to be practical for a high-capacity switch.

VIII. Conclusion

FLC over silicon smart-pixel devices have considerable promise both for reconfigurable optical interconnect and as optically accessible memory within electronic switch architectures. Space and wavelength switches with the required isolation for wavelength routed systems have been designed and implemented. A novel approach to ATM switch design based on FLC smart pixels configured as optically accessed memory and a low-blocking three-stage architecture incorporating both electronic- and optical-switches stages has been presented.

Acknowledgment

The authors gratefully acknowledge the advice and guidance of H. White of British Aerospace (and coordinator of the OCPM project) in the preparation of this paper.

References

[1] *IEEE/LEOS Top. Meet. Smart Pixels*, 1992, 1994, and 1996.
[2] N. Collings, W. A. Crossland, P. J. Ayliffe, D. G. Vass, and I. Underwood, "Evolutionary development of advanced liquid crystal spatial light modulators," *Appl. Opt.*, vol. 28, pp. 4740–4747, 1989.
[3] I. Underwood, D. G. Vass, R. M. Sillito, G. Bradford, N. E. Fancy, A. O. Al Chalabi, M. J. Birch, W. A. Crossland, A. P. Sparks, and S. G. Latham, "A high performance spatial light modulator," in *Devices for Optical Processing, Proc. SPIE*, D. M. Gookin, Ed., 1991, vol. 1562, pp. 107–115.
[4] K. M. Johnson, D. J. McKnight, and I. Underwood, "Smart patial light modulators using liquid crystals on silicon," *IEEE J. Quantum Electron.*, vol. 29, pp. 699–714, 1993.
[5] D. C. Burns, "Design and characterisation of a ferroelectric liquid crystal over silicon spatial light modulator," Ph.D. thesis, University of Edinburgh, U.K., 1994.
[6] D. C. O'Brien, R. J. Mears, T. D. Wilkinson, and W. A. Crossland, "Dynamic holographic interconnects that use ferroelectric liquid-crystal spatial light modulators," *Appl. Opt.*, vol. 33, pp. 2795–2803, 1994.
[7] S. T. Warr, M. C. Parker, and R. J. Mears, "Optically transparent digitally tunable wavelength filter," *Electron. Lett.*, vol. 31, pp. 129–130, 1995.
[8] H. J. White, G. M. Proudley, C. Stace, N. A. Brownjohn, R. Dawkins, A. C. Walker, M. R. Taghizadeh, C. P. Barrett, D. T. Neilson, W. A. Crossland, J. R. Brocklehurst, and M. J. Birch, "The OCPM demonstrator system," *Opt. Soc. Amer. 1995 Tech. Dig. Ser., Photonics in Switching*, vol. 12, pp. 152–154, Mar. 1995.
[9] M. P. Dames; J. R. Collington, W. A. Crossland, and R. W. A. Scarr, "Three-stage high-performance opto-electronic ATM switch: Design and performance," to appear in *Opt. Eng.*, 1996.
[10] J. R. Collington, M. P. Dames, W. A. Crossland, and R. W. A. Scarr, "Optically accessed electronic memory," *Ferroelectrics*, vol. 181, pp. 99–110, 1996.
[11] A. G. Kirk, W. A. Crossland, and T. J. Hall, "A compact and scaleable free-space optical crossbar," *Proc. of 3rd Int. Conf. on Holographic Systems, Components, and Applications*, vol. 342, pp. 137–141, 1991.
[12] P. J. De Groot and R. J. Noll, *Appl. Optics*, vol. 28, pp. 1582–1587, 1989.
[13] R. J. Mears, L. Reekie, I. M. Jauncey, and D. N. Payne, "Low-noise erbium-doped fiber amplifier operating at 1.54 μm," *Electron. Lett.*, vol. 23, pp. 1026–1028, 1987.
[14] R. J. Mears, "Optical fiber lasers and amplifiers," Ph.D. thesis, Southampton University, July 1987.
[15] *IEEE Comm. Mag.*, TAT 12/13 Transatlantic Cable, Feb. 1996.

BNSDOCID: <XP 2155684A >

TS0000548

[16] M. De Prycker, *Asynchronous Transfer Mode: Solution For Broadband ISDN.* New York: Ellis Horwood, 1993, ISN 0-13-178542-7.
[17] T. J. Cloonan, F. B. McCormick, M. J. Herron, F. A. P. Tooley, G. W. Richards, E. Kerbis, J. L. Brubaker, and A. L. Lentine, "A 3D crossover switching network based on S-seed arrays," *Photonic Switching II*, K. Tada and H. S. Hinton, Eds. Berlin: Springer-Verlag, pp. 196–199.
[18] P. J. Vetter, J. Vandewege, G. De Pestel, Q. Tan, F. Migom, J. Van Koetsem, D. Morlion, A. Picard, A. Ambrosy, and G. Vendrome, "Optical interconnection using 'fiber in board' technology," in *Proc. 21st Eur. Conf. Opt. Comm. (ECOC '95)*, Brussels, Sept. 17–21, 1995.
[19] T. J. Cloonan, "Comparative study of optical and electronic interconnection technologies for large asynchronous transfer mode packet switching applications," *Opt. Eng.*, vol. 33, pp. 1512–1523, 1994.
[20] M. A. Handschy, K. M. Johnson, and G. Moddel, "Electro-optic applications of ferroelectric liquid crystals to optical computing," *Ferroelectrics*, vol. 85, pp. 279–289, 1988.
[21] M. J. O'Callaghan and M. A. Handschy, "Diffractive ferroelectric liquid crystal shutters for unpolarized light," *Opt. Lett.*, vol. 16, pp. 770–772, 1991.
[22] H. J. Coles, private communication, 1996.
[23] A. B. Davey and W. A. Crossland, "Potential and limitations of the electroclinic effect in device applications," *Ferroelectrics*, vol. 114, pp. 101–112, 1991.
[24] F. B. McCormick, T. J. Cloonan, A. L. Lentine, J. M. Sasian, R. L. Morrison, M. G. Beckman, S. L. Walker, M. J. Wojcik, S. J. Hinterlong, R. J. Crisci, R. A. Novotny, and H. S. Hinton, "Five-stage free-space optical switching network with field-effect transistor self-electro-optic-effect device smart-pixel arrays," *Appl. Opt.*, vol. 33, pp. 1601–1618, 1994.
[25] W. A. Crossland and A. B. Davey, "Addressing requirements for chiral smectic liquid crystal active backplane spatial light modulators," *Ferroelectrics*, vol. 149, pp. 361–374, 1993.
[26] E. Hecht and A. Zajac, *Optics.* Reading, MA: Addison-Wesley, 1974, pp. 268–271.
[27] S. T. Warr and R. J. Mears, "Polarization insensitive operation of ferroelectric liquid crystal devices," *Electron. Lett.*, vol. 31, pp. 714–716, 1995.
[28] A. R. Dias, R. F. Kalman, J. W. Goodman, and A. A. Sawchuk, "Fiber optic crossbar switch with broadcast capability," *Opt. Eng.*, vol. 22, pp. 955–960, 1988.
[29] M. P. Dames, R. J. Dowling, P. McKee, and D. Wood, "Efficient optical elements to generate intensity weighted spot arrays: Design and fabrication," *Appl. Opt.*, vol. 30, pp. 2685–2691, 1991.
[30] D. C. O'Brien and R. J. Mears, "Computer generated holograms optimized for illumination with partially coherent light using a silicon backplane spatial light modulator as the recording device," *Proc. SPIE*, vol. 1505, pp. 32–37, 1991.
[31] D. C. O'Brien, W. A. Crossland, and R. J. Mears, "A holographically routed optical crossbar: Theory and simulation," *Opt. Comput. Process.*, vol. 1, pp. 233–243, 1991.
[32] H. Okayama and M. Kawahara, "Experiment on deflector-selector optical switch matrix," *Electron. Lett.*, vol. 28, pp. 638–639, 1992.
[33] W. A. Crossland, R. J. Mears, S. T. Warr, and R. W. A. Scarr, "Spatial-light-modulator based routing switches," in *Proc. Opt. Comput. Inst. Phys. Conf.*, 1994, Ser. no. 139, pt. II, pp. 177–182.
[34] S. T. Warr, "Spatial light modulator optical network switch architectures: Theory and simulation," Cambridge University, Tech. Rep., May 1993.
[35] M. J. Holmes, P. Dainty, F. P. Payne, T. J. Hall, and W. A. Crossland, "Low crosstalk devices for wavelength routed networks," *IEE Coll. Guided Wave Opt. Sig. Process.*, IEE Digest no. 95-128, June 1995.
[36] L. Eskildsen and E. L. Goldstein, "Scaling limitations in transparent optical networks due to low-level crosstalk," in *IEEE/LEOS Top. Meet. Opt. Net. and Their Enabling Tech.*, Aug. 1994.
[37] S. T. Warr and R. J. Mears, "Polarization insensitive one-to-any single-mode fiber switch," *Ferroelectrics*, vol. 181, pp. 53–59, 1996.
[38] M. C. Parker and R. J. Mears, "Digital holographic tuning mechanism for WDM," *IEE Coll. Opt. Hybrid Access Net.*, IEE Digest no. 96-052, Mar. 1996.
[39] M. J. Holmes and W. A. Crossland, "Optimization of WDM demultiplexers," *IEE Coll. Transparent Optical Networks—Applications, Architectures, and Technology*, IEE Digest no. 94-103, 1994.
[40] K. W. Cheng, D. A. Smith, J. E. Baran, and B. L. Heffner, "Multiple channel operation of integrated acousto-optic tunable filter," *Electron. Lett.*, vol. 25, pp. 375–376, 1989.
[41] M. C. Parker and R. J. Mears, "A digitally tunable wavelength filter and laser," *IEEE Photon. Technol. Lett.*, vol. 8, pp. 1007–1008, Aug. 1996.
[42] T. D. Wilkinson and R. J. Mears, "Compact optical correlator using silicon backplane SLM for fingerprint recognition," *Ferroelectrics*, vol. 181, pp. 47–52, 1996.
[43] J. E. Morris, M. R. Feldman, W. H. Welch, M. Nakkar, H. Yang, J. Childers, and Y. Raja, "Prototype optically interconnected multichip module based on computer-generated hologram technology," in *Proc. SPIE Conf. 1849 Optoelectronic Interconnects (OE/LASE '93)*, 1993.
[44] M. G. Hluchyj and M. J. Karol, "Queuing in high-performance packet switching," *IEEE J. Select. Areas Commun.*, vol. 6, pp. 1587–1597, 1988.
[45] K. Y. Eng, M. J. Karol, and Y. S. Yeh, "A growable packet (ATM) switch architecture: Design principles and applications," in *GLOBECOM '89 Conf. Rec.*, 1989, pp. 1159–1165.
[46] W. A. Crossland and R. W. A. Scarr, "Optical TDM switch architectures," *IEE Colloq. Opt. Switching*, Digest no. 1993/137, June 1993.

Robert J. Mears (A'92) is a University Lecturer in Engineering at Cambridge University and a Fellow of Pembroke College. His original research was in optical fiber communications, and whilst a student at Southampton he originated and developed the erbium-doped fiber amplifier (EDFA) and other rare-earth-doped fiber devices (various GB and US Patents). He was awarded the IEE Electronics Letters Premium (jointly) for the 1986/1987 session for his publications on these devices. He has been a lecturer at CUED since 1988. His research interests span optical fiber communications for broadband networks and parallel photonic information processing to facilitate intelligent networks, particularly involving spatial light modulators. Recent EPSRC grants include GR/J44773 Parallel Opto-Electronic Telecommunications Systems (POETS) and GR/J44728 Optical Switching Testbed (OST), DTI LINK Smart Advanced Spatial Light Modulators (SASLM) and ESPRIT 7050 Highly Integrated and Compact Opto-electronic Processing Systems (HICOPOS), of which he is Principal Investigator. He has authored or co-authored more than 50 publications and a number of patents.

William A. Crossland was appointed as the Nortel Research Professor of Photonics at Cambridge University Engineering Department in November 1992. Prior to this, he worked with STL (latterly BNR Europe), where he was involved with liquid-crystal devices for fifteen years and photonic switching for three years. He has been a pioneer of ferroelectric liquid-crystal devices for both displays and information processing, and has been co-originator of FLC/VLSI technology, where ferroelectric liquid crystals are combined with silicon VLSI to produce a broadly based electrooptic technology.

Mark P. Dames received the B.S. (Honors) degree in electronics and physics from Edinburgh University, Scotland, in 1988. He is presently working towards the Ph.D. degree in optically assisted ATM switching fabrics at Cambridge University, England.

After receiving the B.S. degree, he then took up a position at BT Laboratories, Martlesham Heath, England, working in the Optical Physics Division on optical switching, computer-generated holography, and optical interconnection technologies, before moving to work on the development of network management systems.

TS0000549

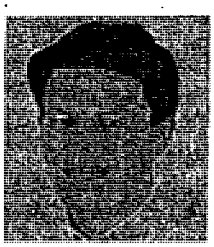

James R. Collington received the B.A. degree in electrical and information sciences from Cambridge University, England, in 1993. He is presently working towards the Ph.D. degree in optically accessed memory technology at Cambridge University.

Michael C. Parker received the B.A. degree in electrical and information sciences at Cambridge University, England, in 1992. He is presently working towards the Ph.D. degree at Cambridge University.

During a six-month sabbatical, he worked at Carl Zeiss, Germany. His doctoral research has been the development of optical telecommunications components using free-space ferroelectric liquid-crystal spatial light modulators, such as holographic space and wavelength (WDM) switches and tunable erbium-doped fiber lasers.

Steve T. Warr received the B.A. degree in electrical and information sciences from Cambridge University, England, in 1993. He is presently working towards the Ph.D. degree.

He has spent more than three years designing holographic liquid-crystal-based switches. He is closely involved in the Optical Switching Testbed (OST) research project.

Timothy D. Wilkinson received the B.E. (Elec.) degree from Canterbury University, New Zealand, in 1989 and the Ph.D. degree from Cambridge University, England, in 1994.

He is currently the Sir Henry Jones British Gas Research Fellow at Pembroke College, Cambridge. He developed the Binary phase-only matched filter (BPOMF) correlator during his Ph.D. research, demonstrating filter invariance using simulated annealing and a novel technique to achieve asymmetry. He has co-authored seven refereed journal papers on optical processing. He is currently responsible for SLM and device fabrication at Cambridge University Engineering Department.

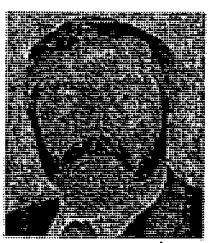

Anthony B. Davey received the degree in chemistry and the Ph.D. degree from University College, London, in 1962 and 1967, respectively.

He has been working on liquid-crystal electrooptic effects since 1980. During this time, he has been involved in the development of various kinds of displays and spatial light modulators.

TS0000550

This Page is Inserted by IFW Indexing and Scanning Operations and is not part of the Official Record

BEST AVAILABLE IMAGES

Defective images within this document are accurate representations of the original documents submitted by the applicant.

Defects in the images include but are not limited to the items checked:

- ☐ BLACK BORDERS
- ☐ IMAGE CUT OFF AT TOP, BOTTOM OR SIDES
- ☐ FADED TEXT OR DRAWING
- ☒ BLURRED OR ILLEGIBLE TEXT OR DRAWING
- ☐ SKEWED/SLANTED IMAGES
- ☐ COLOR OR BLACK AND WHITE PHOTOGRAPHS
- ☐ GRAY SCALE DOCUMENTS
- ☐ LINES OR MARKS ON ORIGINAL DOCUMENT
- ☐ REFERENCE(S) OR EXHIBIT(S) SUBMITTED ARE POOR QUALITY
- ☐ OTHER: _____

IMAGES ARE BEST AVAILABLE COPY.
As rescanning these documents will not correct the image problems checked, please do not report these problems to the IFW Image Problem Mailbox.

(12) INTERNATIONAL APPLICATION PUBLISHED UNDER THE PATENT COOPERATION TREATY (PCT)

(19) World Intellectual Property Organization
International Bureau

(43) International Publication Date
12 April 2001 (12.04.2001)

PCT

(10) International Publication Number
WO 01/25840 A1

(51) International Patent Classification[7]: G02F 1/1335, 1/139, 1/31, G02B 5/32, G03H 1/08

(21) International Application Number: PCT/GB00/03796

(22) International Filing Date: 4 October 2000 (04.10.2000)

(25) Filing Language: English

(26) Publication Language: English

(30) Priority Data:
9923428.8 4 October 1999 (04.10.1999) GB

(71) Applicant *(for all designated States except US)*: **THOMAS SWAN & CO. LTD.** [GB/GB]; Crookhall, Consett, County Durham DH8 7ND (GB).

(72) Inventors; and

(75) Inventors/Applicants *(for US only)*: **CROSSLAND, William** [GB/GB]; Odd Spot, 15 School Lane, Harlow, Essex CM20 8QD (GB). **HOLMES, Melanie** [GB/GB]; The Forge, The Street, Brundish, Woodbridge, Suffolk IP13 8BL (GB). **MANOLIS, Ilias** [GR/GR]; Nea Figalia, Olympia Hleias, GR-270 56 (GR). **WILKINSON, Timothy** [NZ/GB]; Jesus College, Cambridge CB5 8BL (GB). **REDMOND, Maura** [GB/GB]; 24 Thornton Road, Girton, Cambridge CB3 0NW (GB). **ROBERTSON, Brian** [GB/GB]; c/o Robertson, Raymond, 75 Poplar Avenue, Hove, East Sussex BN3 8PT (GB).

(74) Agents: **NEOBARD, William, John** et al.; Page White & Farrer, 54 Doughty Street, London WC1N 2LS (GB).

(81) Designated States *(national)*: AE, AG, AL, AM, AT, AU, AZ, BA, BB, BG, BR, BY, BZ, CA, CH, CN, CR, CU, CZ, DE, DK, DM, DZ, EE, ES, FI, GB, GD, GE, GH, GM, HR, HU, ID, IL, IN, IS, JP, KE, KG, KP, KR, KZ, LC, LK, LR, LS, LT, LU, LV, MA, MD, MG, MK, MN, MW, MX, MZ, NO, NZ, PL, PT, RO, RU, SD, SE, SG, SI, SK, SL, TJ, TM, TR, TT, TZ, UA, UG, US, UZ, VN, YU, ZA, ZW.

(84) Designated States *(regional)*: ARIPO patent (GH, GM, KE, LS, MW, MZ, SD, SL, SZ, TZ, UG, ZW), Eurasian patent (AM, AZ, BY, KG, KZ, MD, RU, TJ, TM), European patent (AT, BE, CH, CY, DE, DK, ES, FI, FR, GB, GR, IE, IT, LU, MC, NL, PT, SE), OAPI patent (BF, BJ, CF, CG, CI, CM, GA, GN, GW, ML, MR, NE, SN, TD, TG).

Published:
— *With international search report.*

For two-letter codes and other abbreviations, refer to the "Guidance Notes on Codes and Abbreviations" appearing at the beginning of each regular issue of the PCT Gazette.

(54) Title: OPTICAL SWITCH

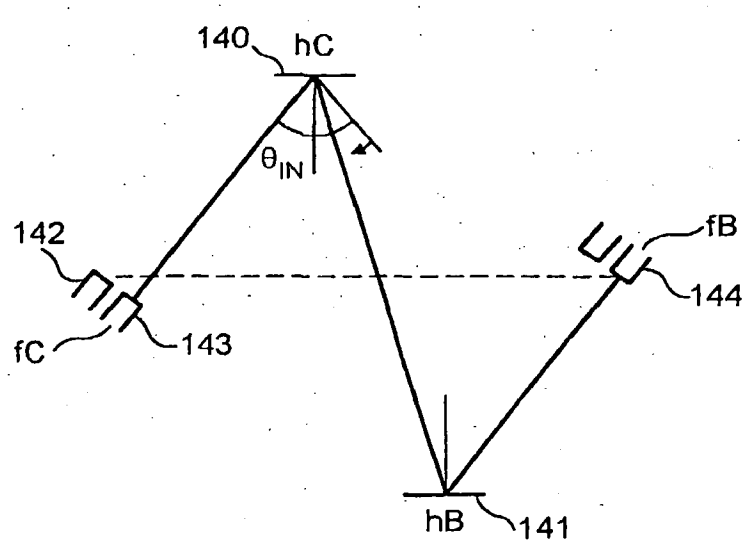

(57) Abstract: An optical switch uses a polarisation insensitive spatial light modulator operating by a double pass through a liquid crystal cell. The switch includes two such modulators in a cross bar arrangement. Different embodiments employing techniques for reducing cross talk are described.

WO 01/25840 A1

AN

OPTICAL SWITCH

FIELD OF THE INVENTION

The invention relates to the general field of optical switching and more particularly to optical switching using multiphase or continuous phase hologram devices.

BACKGROUND OF THE INVENTION

Optical fibre switching components are fundamental to modern global information systems. Single-stage matrix switches operating independently of the optical bit-rate and modulation formats, capable of reconfigurably interconnecting N optical inputs to M optical outputs (where N and M are generally, but not necessarily the same number), are particularly attractive. Many switches for achieving the required switching are limited in functional size to less than 64x64, and/or suffer from relatively poor noise performance. One method which provides good noise performance and is potentially more scalable than other optical switch technologies is to use reconfigurable holograms as elements for deflecting optical beams between arrays of optical inputs and optical outputs.

A known holographic optical switch, otherwise known as an optical shuffle, is shown in figure 1.

In figure 1, an array of optical sources 1 and an array of optical receivers 7 are arranged as the inputs and

TS0000553

outputs of a holographic switch. For many applications, the sources and receivers may comprise cleaved or end-polished fibres. In other applications, the inputs may be light emitting sources such as lasers or LEDs, and the outputs may be photo-detectors. Each input 1 may transmit a different digital or analog optical signal through the switch to one (or possibly several) of the outputs 7. Thus up to N different inputs may be simultaneously passing through the switch at any instant. Each input may consist of a single-wavelength modulated by data; a number of different data sources operating at different wavelengths (e.g. a wavelength-multiplexed system); or a continuum of wavelengths. Although the switch is shown in cross-section in figure 1, the input & output arrays 1,7 are typically 2-dimensional arrays, and the holographic switch occupies a 3-dimensional volume.

To achieve switching, the input array 1 is arranged behind a first lens array 2. Each optical signal emitted by the input array enters free-space, where it is collimated by one of the lenses in first lens array 2. Each collimated beam then passes through a first hologram display device 3. The first hologram display device 3 displays a holographic pattern of phase and/or intensity and/or birefringence which has been designed to produce a specific deflection of the optical propagation directions of the beams incident upon the device. The hologram pattern may also be designed such that each optical beam experiences a different angle of deflection. The first hologram display device 3 may also have the effect of splitting an individual beam into several different angles or diffraction orders. One application for utilising this power splitting effect is to route an input port to more than one output port.

BNSDOCID: <WO 0125840A1 I >

The deflected optical signals propagate in free-space across an interconnect region 4 until they reach a second hologram device 5. The hologram pattern at second hologram device 5 is designed in such a way to reverse the deflections introduced at the first hologram display device 3 so that the emerging signal beams are parallel with the system optic axis again.

The optical signals then pass through a second lens array 6 where each lens focuses its associated optical signal into the output ports of a receiver array 7. Thus the hologram pattern displayed on first hologram display device 3 and the associated "inverse" hologram pattern displayed on second hologram display device 5 determine which output fibre or fibres 7 receive optical data from which input fibre or fibres 1. The interconnect region 4 allows the signal beams to spatially reorder in a manner determined by the specific hologram patterns displayed on the first 3 and second 5 hologram display devices. The switch also operates reversibly such that outputs 7 may transmit optical signals back to the inputs 1.

The system shown in figure 1 (and functionally equivalent configurations utilising planes of symmetry within the switch optics) is well known as a method for static optical shuffle, using fixed hologram recordings as first 3 and second 5 hologram display devices whereby the input signals are "hard-wired" to specific outputs.

It has been proposed to extend the optical shuffle of Figure 1 to provide a reconfigurable switch by displaying hologram patterns on a spatial light modulator (SLM). There are however a number of practical design problems associated with the migration from a static optical

RNSDOCID: <WO 0125840A1 I >

shuffle to a reconfigurable switch. Among these are the following:

1) Known SLMs, using a ferroelectric liquid crystal provide binary phase modulation and such phase modulation can be
2) polarisation-insensitive. However, the maximum theoretical diffraction efficiency for a binary phase device is only 40.5%. For example, the architecture shown in figure 1 uses two SLM devices, and hence the maximum net diffraction efficiency of this system is 16.4 %. The diffraction efficiency of holographic system would be improved significantly by using multiple phase modulation. For many applications this multiple phase modulation must be polarisation-insensitive. It is desirable that the phase may be varied continuously between 0 and (at least) 2π.

3) In order to implement a holographic switch using two SLMs, an appropriate set of hologram patterns must be chosen. This hologram set must be capable of routing any input channel to any input channel whilst keeping the crosstalk figures within specified values. In particular, the hologram set must be optimised to prevent beams associated with unwanted diffraction orders from being launched down the wrong channel. Increasing the number of phase levels tends to result in a decrease in the strength of the unwanted diffraction orders.

4) A convenient method of constructing reconfigurable holograms for use within an NxN switch would be to integrate a layer of liquid crystal material above a silicon circuit. This type of SLM typically operates in reflection rather than transmission, and the switch layout shown in figure 1 is therefore no longer appropriate.

TS0000556

Accordingly the present invention aims to address at least some of these issues.

SUMMARY OF THE INVENTION

According to a first aspect of the invention there is provided a switch comprising an integrated spatial light modulator for receiving light of a predetermined wavelength, the modulator comprising a liquid crystal layer spaced from a second layer by a layer having an optical retardance of an odd integer number of quarter-waves of said wavelength, wherein the second layer is reflective of said light of said wavelength.

In one embodiment said liquid crystal layer is a nematic crystal layer.

In another said liquid crystal layer is a π-cell.

Preferably the second layer is a metallic layer.

Advantageously the metallic layer is of Aluminium.

Conveniently said wavelength is 1.57 μm

According to a second aspect of the invention there is provided a switch comprising an integrated spatial light modulator for receiving light of a predetermined wavelength, the modulator comprising a liquid crystal cell having a pair of opposed and mutually substantially parallel end plates disposed substantially parallel to an axial plane, and spaced apart by a liquid crystal layer providing a director angle tilt in a tilt plane substantially orthogonal to said axial plane, said liquid crystal being spaced from a second layer by an optical layer having a retardance of an odd integer number of

BNSDOCID: <WO 0125840A1 I >

quarter-waves of said wavelength, wherein the second layer is reflective of said light of said wavelength, and the optical layer being disposed with respect to said tilt plane such that light polarised in said tilt plane returns through said liquid crystal layer polarised substantially orthogonal to said tilt plane.

Preferably said liquid crystal layer is a nematic crystal layer.

Alternatively said liquid crystal layer is a π-cell.

Preferably the second layer is a metallic layer.

Conveniently the metallic layer is of Aluminium.

Advantageously the modulator has a glass cover disposed over said liquid crystal layer, and the metallic layer has a connection to driving circuitry for switching the modulator.

According to another aspect of the invention there is provided a method of switching a light beam having a first component polarised in a first direction and a second component polarised in a second direction orthogonal to the first, the method comprising providing a device having a liquid crystal layer and an optical retardance, the liquid crystal being responsive to a variable drive voltage to provide a corresponding variation in director angle tilt; and further comprising: applying a variable drive voltage to said liquid crystal device; applying said beam to said liquid crystal device to provide an intermediate beam having a variable phase delay applied to said first component and an at least substantially fixed phase delay to said second component;

by said retardance, rotating the polarisation of said intermediate beam; applying the resultant light to said liquid crystal device whereby a component of said resultant light polarised in said first direction receives said variable phase delay and a component of said resultant light polarised in said second direction receives said at least substantially fixed phase delay.

Preferably the rotating step comprises rotating said polarisation through 90 degrees whereby at least substantially equal amounts of variable phase delay are applied to each of said first and second components.

Advantageously the rotating step comprises a step of reflecting said intermediate beam back along its incoming path.

According to yet another aspect of the invention there is provided an optical switch comprising a plurality of input optical fibres for providing plural input light beams, a plurality of optical receivers for receiving output light beams, a first and a second reflective spatial light modulator, and drive circuitry for forming a respective plurality of switching holograms on each spatial light modulator, said holograms being selected to couple each said input optical source to a respective desired optical receiver, wherein each spatial light modulator incorporates a liquid crystal device for modulating the phase of light travelling through said liquid crystal device, a reflector device for returning light back through said liquid crystal device and a device, disposed between said liquid crystal device and said reflector device, for rotating the polarisation of light by 90 degrees, wherein the optical switch has an axis of symmetry and the spatial light modulators are

disposed on opposite sides of said axis, each said switching hologram on said first spatial light modulator being operative to deflect said input light beams to said switching holograms on said second spatial light modulator and each said switching hologram on said second spatial light modulator being operative to deflect said light beams to a respective optical receiver.

Preferably each said input optical fibre is directed towards a respective switching hologram on said first spatial light modulator, and each said optical receiver comprises an output optical fibre, wherein each output optical fibre is directed towards a respective switching hologram on said second spatial light modulator.

In one embodiment the first and second spatial light modulators are disposed such that a respective zero-order beam reflected from each switching hologram on said first spatial light modulator is incident on a respective switching hologram on said second spatial light modulator.

Preferably a half wave plate is disposed between said first and second spatial light modulators.

Alternatively the switching holograms are spaced apart on said first and second spatial light modulators and the first and second spatial light modulators are disposed such that a respective zero-order beam reflected from each switching hologram on said first spatial light modulator is incident on a spacing between two adjacent switching holograms on said second spatial light modulator.

Advantageously a half wave plate is disposed between said first and second spatial light modulators.

Conveniently the switch further comprises respective optical systems disposed between said input fibres and said first spatial light modulator and between said output fibres and said second spatial light modulator, wherein each said optical system comprises two confocal lenses, the input and output fibres being disposed in respective planes and a focal plane of a first lens of each optical system coinciding with the plane of the associated fibres.

Preferably the input and output fibres are disposed in respective planes and the optical switch further comprises respective arrays of microlenses, said microlenses being disposed in front of each fibre plane such that each microlens corresponds to a respective fibre, and respective optical systems disposed between said input fibres and said first spatial light modulator and between said output fibres and said second spatial light modulator, wherein each said optical system comprises two confocal lenses, and a focal plane of a first lens of each optical system coinciding with the output focal plane of the associated microlens array.

Advantageously said optical fibres are thermally expanded core (TEC) fibres.

In another embodiment the first and second spatial light modulators are mutually offset so that no zero order beams from the first spatial light modulator is incident on the second spatial light modulator.

TS0000561

Conveniently at least one optical receiving element is disposed in a region receiving said zero-order beams from said first spatial light modulator, whereby input signal may be monitored.

Advantageously, the or each element is a fibre. Alternatively other elements such as receiver diodes could be used.

Preferably each switching hologram provides a repeating pattern on its spatial light modulator, whereby the repeating patterns on the two SLMs satisfy the relation:

$$\theta_2(u) = \theta_1(-u)$$

where $\theta_2(u)$ is the repeating pattern on the second SLM and $\theta_1(-u)$ is the repeating pattern on the first SLM, and the angle of incidence is such that the Poynting vector of the input light beam incident on the first SLM, and of the light beams leaving the second SLM, is in the plane of tilt of the director.

In a preferred embodiment, the output fibres are secured together in an array by a glue containing black pigment to attenuate misaligned light.

In another preferred embodiment, the output fibres are secured together to form an array and the spacing between the fibres of the array is occupied by interstitial fibres which serve to accept and guide away cross talk from the switching zone.

BRIEF DESCRIPTION OF THE DRAWINGS

Non-limiting embodiments of the invention will now be described with reference to the accompanying drawings, in which:

Figure 1 shows a prior art optical switch useful in understanding the present invention;

Figure 2 is a schematic diagram showing the propagation of a planar wave front through a uniaxial liquid crystal device;

Figure 3 shows the use of a quarter-wave plate, and illustrates the polarisation states of an input field in a double-pass reflective system;

Figure 4 shows a schematic cross-sectional view of a first embodiment of a SLM with integral quarter-wave plate;

Figure 5 shows a schematic cross-sectional view of a second embodiment of a SLM with integral quarter-wave plate;

Figure 6 shows an overview of an exemplary silicon back plate layout for the device of Figure 5;

Figure 7 shows a schematic diagram of a pi cell for use in the invention;

Figure 8 shows a partial layout diagram of a first embodiment of an optical switch using two reflective SLMs, in accordance with the invention;

Figure 9 shows a schematic diagram of a part of a first optical system useable in the switch of Figure 8;

Figure 10 shows a schematic diagram of a part of a second optical system including a microlens array, useable in the switch of Figure 8;

Figure 11 shows the effects of zero-order cross talk in the device of Figure 8;

Figure 12 shows a partial layout diagram of a second embodiment of an optical switch in accordance with the invention, being a modification of Figure 8 to include a half wave plate in the optical path between the two SLMs;

Figure 13 shows a partial layout diagram of a third embodiment of an optical switch in accordance with the invention, being a modification of Figure 8 having the output SLM offset laterally to reduce cross talk.

Figure 14 shows a fourth embodiment in which the output SLM is offset transversally to avoid cross talk;

Figure 15 shows propagation conditions inside the liquid crystal; and

Figure 16 shows the differing propagation conditions inside the input and output SLMs.

DESCRIPTION OF THE PREFERRED EMBODIMENTS

In the various figures, like reference signs indicate like parts.

Figure 2 shows the propagation of a planar wave front 100, travelling along the z-direction through a layer of

uniaxial liquid crystal cell 101 of uniform alignment. The cell comprises a front plate 102 and a rear plate 103 sandwiching the liquid crystal 104. The optical axis 105, later also referred to herein as a director axis of the uniaxial medium has been taken in the general case to tilt away from the x-direction by an angle θ on to the plane xOz. The tilt angle θ is electrically controllable by a voltage applied across the liquid crystal cell 101. The two propagation modes travel along the z-direction with different velocities: these may be calculated using a geometric construction in which an ellipsoid is drawn with a long axis of length n_e parallel to the director. For a uniaxial medium the other two axes of the ellipsoid have equal lengths (n_0). A plane is constructed perpendicular to the Poynting vector (in this case the plane is parallel to the xOy plane). The intersection of this plane with the ellipsoid defines an ellipse 110. The directions of the major and minor axes 111, 112 of this ellipse define the two orthogonal polarisation modes, while the lengths of these two axes define the refractive index experienced by the corresponding mode. For a tilt in the xOz plane, the minor axis of this ellipse is parallel to the $\underline{y}$ direction, and the major axis is therefore parallel to the $\underline{x}$ direction, for all values of θ. Hence, for any θ, the $\underline{x}$ and $\underline{y}$ directions are parallel to the polarisation modes, so that the components of incident light polarised in these directions will remain in these directions on propagation through the liquid crystal. This remains true even if the tilt angle θ is changing inside the medium.

The length of the minor axis 112 is n_0, for all values of θ. Hence the component of the field that is parallel to the y-axis experiences refractive index n_o whatever the

BNSDOCID: <WO 0125840A1 >

TS0000565

tilt angle θ is, and therefore the phase delay caused to it by the cell is independent of the voltage across it (ordinary wave). On the contrary, the length of the major axis does depend on the tilt angle θ, and so the x-component of the field (extraordinary wave) experiences different refractive index n for different values of the tilt angle.

The length of the major axis 111 is $n(\theta)$, and is given by equation (1):

$$\frac{1}{n^2(\theta)} = \frac{\cos^2(\theta)}{n_o^2} + \frac{\sin^2(\theta)}{n_e^2} \qquad (1)$$

It follows that $n_o \leq n(\theta) \leq n_e$. The relative phase delay between the two components is then given by the equation (2):

$$\Delta\phi = k_0 d \Delta n \qquad (2)$$

In equation (2), d is the thickness of the liquid crystal cell, k_0 the wavenumber of the field in free space and Δn is given by $\Delta n = n(\theta) - n_o$. Since Δn is a function of the voltage across the cell, equation (2) shows that the applied voltage can continuously control the phase difference between the two components across the cell.

It will be understood by those skilled in the art that it is desirable to provide phase modulation that is not sensitive to polarisation, and devices and methods for achieving this will now be described for the situation of normally incident light:

Expression (3) shows a mathematical representation of an arbitrary polarisation state as the superposition of two orthogonal, linearly polarised waves:

$$E_{IN}(x,y,z,t)=\begin{pmatrix}E_{0X}(t)\exp j\varepsilon_x(t)\\E_{0Y}(t)\exp j\varepsilon_Y(t)\end{pmatrix}\exp j(kz-\omega t) \qquad (3)$$

where the amplitudes, $E_{0Y}(t)$ and $E_{0X}(t)$, and phases $\varepsilon_X(t)$ and $\varepsilon_Y(t)$ vary slowly, remaining essentially constant over a large number of oscillations. For unpolarised light the relative amplitude, $E_{0Y}(t)/E_{0X}(t)$ and relative phase, $\varepsilon_Y(t)-\varepsilon_X(t)$, vary rapidly compared to the coherence time of each linearly polarised component, i.e. the two waves are mutually incoherent. For randomly polarised light the relative amplitude and phases vary slowly with respect to the coherence time, i.e. the two waves are mutually coherent. Hence the above representation is valid for any light wave.

Such light could be modulated by applying the same phase delay to both of these components. However, the configuration in figure 2, allows just one of the two components (x-component) to be properly phase-modulated since the y-component always gains the same phase delay.

Figure 3 shows a schematic diagram of a configuration that would allow for both components to be modulated. Referring to figure 3, light is reflected from a mirror 30 after passing through a liquid crystal cell 32 to enable a double-pass configuration. In between the two passes a suitable rotator 31 is introduced, which rotates both components through 90°. As is known to those skilled in the art, a quarter -wave plate acts to retard one polarisation component of light relative to the orthogonally polarised component; thus the combination of a quarter-wave plate (with an optical axis tilted out of

TS0000567

the plane 0xz by 45°) and a mirror acts as a 90° rotator. It would of course be possible to use a 3/4, 5/4 etc-wave plate, the criterion being an odd-integer number of quarter waves, so that a double pass produces the overall 90° rotation. Consider light with an arbitrary polarisation state (as in expression 3) at normal incidence passing through the configuration shown in figure 3. Differences for off-normal incidence will be considered later.

For the first pass, on the way towards the quarter wave plate and mirror, the polarisation component polarised in the $\underline{x}$ direction ($E_{0x}(t)$ exp j $\varepsilon_x(t)$) experiences a refractive index $n(\theta)$, where θ depends on the applied voltage, while the component in the $\underline{y}$ direction ($E_{0Y}(t)$ exp j $\varepsilon_Y(t)$) does not, and instead experiences a refractive index, n_0 , that is independent of the applied voltage. The orientation of the quarter wave plate is such that these two polarisation components are exchanged. For the 2nd pass, on returning back through the liquid crystal, the component $E_{0x}(t)$ exp j $\varepsilon_x(t)$) is now polarised in the $\underline{y}$ direction, and therefore experiences a refractive index n_0, while the component $E_{0Y}(t)$ exp j $\varepsilon_Y(t)$ is now polarised in the $\underline{x}$ direction, and experiences a refractive index $n(\theta)$. In this way both components gain overall the same amount of phase delay through the system since they both experience one pass under a refractive index $n(\theta)$ and one pass under a refractive index n_o.

In particular (equations 4 and 5):

E_{ox} component: $$\Delta\phi_{OX} = \Delta\phi_{1ST-PASS} + \Delta\phi_{2ND-PASS} = kn(\theta)d + kn_0 d \quad (4)$$

RNISDOCID:<WO 01258401 >

$$E_{OY} \text{ component: } \Delta\phi_{OY} = \Delta\phi_{1ST-PASS} + \Delta\phi_{2ND-PASS} = kn_0 d + kn(\theta)d \quad (5)$$

The system may be described mathematically (equation 6) in terms of Jones matrices, with the result that (as expected):

$$\begin{aligned} & E_{OUT}(x,y,z,t) \\ &= \begin{pmatrix} 0 & \exp jkd(n_0 + n(\theta)) \\ \exp jkd(n_0 + n(\theta)) & 0 \end{pmatrix} \begin{pmatrix} E_{0X}(t)\exp j\varepsilon_x(t) \\ E_{0Y}(t)\exp j\varepsilon_Y(t) \end{pmatrix} \exp j(kz - \omega t) \quad (6) \\ &= \begin{pmatrix} E_{0Y}(t)\exp j\{\varepsilon_Y(t) + kd(n_0 + n(\theta))\} \\ E_{0X}(t)\exp j\{\varepsilon_x(t) + kd(n_0 + n(\theta))\} \end{pmatrix} \exp j(kz - \omega t) \end{aligned}$$

It should however be noted that the light exits the system in the opposite orthogonal state. This Jones matrix result uses the convention that the y-axis is inverted on reflection from the mirror. The mathematical result confirms that both components of the output light have the same phase change (in agreement with equation 4 and 5) and therefore polarisation insensitive phase modulation is feasible.

In general θ may vary with z, in which case the index $n(\theta)$ in (6) should be replaced by (expression 7):

$$n(\theta) \rightarrow \frac{1}{d}\int_{z=0}^{d} n(\theta(z))dz \quad (7)$$

The foregoing principle can be applied to an array of modulating elements. A plane wave front of arbitrarily polarised light, which normally impinges on to such an array of pixels, each of which is characterised by a specific value of tilt angle (by the application of

BNSDOCID: <WO 0125840A1 I >

different voltages across it), or a specific distribution of tilt angles, can be spatially phase modulated.

Referring now to Figure 4, a first embodiment of an integrated spatial light modulator in accordance with the invention will now be described:

AS seen in figure 4, the SLM consists of an aluminium pad 120, which forms a pixel array, and is connected to pixel driving circuitry by a connection figuratively shown at 126. On the pixel array 120 there is disposed a quarter -wave plate 121. On the quarter-wave plate, and over an intervening alignment layer, (not shown) there is disposed a liquid crystal layer 122 - here a nematic liquid crystal is used, but the invention is not so limited. The actual requirement is the ability to provide an out of plane tilt. On the liquid crystal layer there is disposed an alignment layer 123, as known to those skilled in the art, and over the alignment layer there is disposed a transparent conductive layer 124 such as an ITO (Indium Tin Oxide) layer forming a common electrode plane, and an upper glass layer 125.

The quarter-wave plate can be deposited on the pixel array by spin-coating a proper reactive monomer, which can be polymerised by exposure to ultraviolet light. In the cell of Figure 4, the aluminium pad acts as a mirror and also provides the necessary power voltage across the cell for the liquid crystal 122 to switch.

A second embodiment is shown in figure 5.

Referring to figure 5, a pixel array 130 is integrated on a silicon-1.5μm-transparent backplane structure 131, and is sandwiched between the backplane structure and one

face of a liquid crystal layer 132. The other side of the liquid crystal layer 132 is in contact with an alignment layer 133, which in turn is covered by an ITO layer 134. A quarter wave-plate 135 is disposed between a front aluminium mirror 136 and the ITO electrode 134. The thickness of the quarter wave plate may be adjusted by spin-coating techniques so that in reflection it functions as a half-wave plate at λ=1.57 μm.

An embodiment of a spatial light modulator in accordance with figure 5 was constructed. The pixels were constructed using the polysilicon layer of a conventional 2μm CMOS process. Figure 6 shows an overview of the silicon backplane layout.

Referring to Figure 7 a further embodiment of the invention uses a twisted nematic liquid crystal mixture in a π-cell configuration, again using a quarter-wave plate. Such a device enables reduced liquid crystal response time. In such cells the director of the nematic liquid crystal twists along the thickness of the cell through an angle. Figure 7A shows the director angle as a series of illustrative lines 50- 56 across the cell thickness, with the cell in the unbiased state. Figure &B shows the other extreme condition with maximum bias, with the directors forming a straight line between the front and rear plates. In a pi cell flow of material within the cell during the switching process is minimised and the response time decreases. Given that the thickness of the cell is large enough so that the field can be actually wave-guided through it, the same principle of figure 2 applies and the cell can give fast, polarisation insensitive switching.

Although the above discussions are in the context of an integral retarder, it is also possible to use a non-integral retarder, such as a non-integral quarter wave plate. The following description is not therefore limited to an integral quarter wave plate.

Referring now to Figure 8, a first partial diagram of an embodiment of a reflective switch uses a first, or input SLM 140 and a second, or output SLM 141, each divided into a set of blocks (or holograms), and disposed spaced apart and generally parallel to and on opposite sides of an axis of symmetry 142. The two SLMs face the axis 142, and are spaced along it. An input fibre array 143 having an input fibre FC is directed towards the first SLM 140, and is disposed such that light from the fibres in the array are incident upon the input SLM at an angle θ_{in} to a plane normal to the plane of the SLM. An output fibre array 144 having an output fibre fB is similarly directed with respect to the output SLM 141. Thus light describes a generally zigzag path from the input fibres of the input array, to the first SLM 140, then to the second opposing output SLM 141 and finally to a fibre of the output array 144. As discussed above, each SLM displays plural holograms, and the disposition of the system is such that for the input SLM 140, each hologram is associated with a particular input fibre, while for the output SLM 141, each hologram is associated with a particular output fibre.

Routing from input fibre fC to output fibre fB is achieved by configuring input hologram hC to deflect the input beam to output hologram hB, so that the angle of reflection typically differs from the incident angle θ_{in}. Output hologram hB deflects the beam incident on it to output fibre fB. In between each hologram and its

corresponding fibre there is an optical system, embodiments of which are described later herein, that has the function of presenting beams of appropriate diameter to the hologram.

In order to minimise the system losses, it is desirable to have as few lenses as possible in the optical system. A first optical system, for use with the switch of Figure 9, is shown in Figure 9. Referring to Figure 9, the optical system has a first 150 and a second 151 confocal lens in a telescopic arrangement. The system has the fibre array 143 to the left, as shown, of the first lens 150, and the SLM 140 on the right of the second lens 151. The focal length f_1 of the first lens 150 is shorter than the focal length f_2 of the second lens 151. The fibre array 143 is positioned at the input focal plane of the first lens 150, while the output focal plane of the second lens 151 is approximately midway between the hologram devices 140, 141 (see figure 8). The same system would be used at both input and output to the switch. Under certain circumstances, as will be clear to those skilled in art, a field flattening lens may be required.

In a co pending patent application an embodiment using reflective SLMs has the beam passing twice through a lens (off-axis) positioned immediately in front of the SLM.

The system of Figure 9 has a relatively low wavelength range. However, a number of measures can be used to improve the wavelength range. These include:

use of fibres with a larger spot-size, such as TEC (Thermally Expanded Core) fibres:

use of fibres with a narrower diameter thus allowing closer packing; and

use of a microlens array after the fibre array, so that the focused spots leaving the microlens array are in the input focal plane of the lens of lower focal length (see figure 10 in which a microlens array 153 having focal length f_m is between the lens 150 and the input fibre array 143. The input microlens array 153 is disposed with respect to the input fibres so as to focus light from those fibres to the focal plane of the lens 150).

An advantageous option is to use both a microlens array and larger spot-size fibres in the fibre array.

As will be clear to those skilled in the art, the required number of pixels in each row of the hologram, M, may be calculated using the beam spot size of the hologram and the maximum beam steering angle, and the cross talk requirement.

The requirements of optimum performance suggest the use of either standard fibres with a microlens array or fibres with larger than standard spot size.

As known to those skilled in the art, a quarter-wave plate will only work perfectly for one particular wavelength, giving rise to errors at other wavelengths. Deviations from the theoretical also result from fabrication tolerances in the quarter-wave plate thickness and birefringence, and from misalignments between the plate orientation and the plane of tilt of the liquid crystal.

It can be shown that these effects produce zero-order (i.e. undiffracted) polarisation-dependent crosstalk in a

TS0000574

switch configuration due to the component of incident light in the $\underline{y}$ polarisation direction.

For incident light polarised in the $\underline{x}$ direction, it can be shown that the result of the errors is to produce a diffraction order at twice the angle of the intended main diffraction order. The amplitude of this doubled-order crosstalk varies with the polarisation state of the input light, and hence the effect is to generate polarisation-dependent crosstalk.

Reference to Figure 8 shows that the input and output holograms deflect the beam in opposite directions. As known, maximal wavelength range is achieved when angular deflection is equal and opposite. The consequence is that, with the SLMs parallel as shown, the beams travelling from the input fibres to the input holograms are parallel to the beams travelling from the output holograms to the output fibres.

As the hologram array is regular, such that the set of tilt angles is quantised into units of Mp/L, where M is the number of pixels in each row of the hologram, p is the pixel pitch, and L is the distance between the holograms, therefore to route to a fibre n_X along in the x direction, and n_Y along in the y direction, the beam deflection at the input hologram is given by equation 8:

$$\delta(\sin\theta_X) = \frac{n_X Mp}{L} \quad and \quad \delta(\sin\theta_Y) = \frac{n_Y Mp}{L} \qquad (8)$$

Also the beam deflection at the output hologram is (equation 9):

$$\delta(\sin\theta_X) = -\frac{n_X Mp}{L} \quad and \quad \delta(\sin\theta_Y) = -\frac{n_Y Mp}{L} \qquad (9)$$

TS0000575

Referring now to Figure 11, the output SLM 141 is arranged such that the zero-order beam reflected from the centre of any hologram on the input SLM 140 is incident on the centre of an output hologram of the output SLM 141. This is the configuration that maximises the wavelength range. For example, the zero-order reflection from hologram hA is incident on the centre of hologram hB.

The effect of the quarter-wave plate tolerances is to route a beam 145 of amplitude a_{yy} from hologram hA on input SLM 140 to hologram hB on output SLM 141, where a_{yy} is the fraction of incident light polarised in the $\underline{y}$ direction which remains in that state after transition through the first SLM 140. Analogous effects at the second SLM 141 cause a beam 146 of net amplitude of up to $(a_{yy})^2$ to pass into the zero-order output from hologram hB. As a result of the system geometry, the zero-order beam 146 reaches output fibre fC. Hence the effect of the $\underline{y}$ polarised light that remains in this polarisation state is to cause crosstalk in fibre fC of maximum amplitude $(a_{yy})^2$ from the signal entering the switch at fibre fA. The remainder of the light from hologram hA directed to hologram hB has amplitude $a_{yy}(1-a_{yy})$. This light will be subject to the intended deflection angle introduced by hologram hB, and will form a light beam 147. Let the distance in hologram units between holograms hA and hC on first, input SLM 140 be (d_x, d_y). What happens next depends on the design of the system. For the basic system (microlens-free system), the beam will enter output fibre fC at a tilt angle. The system may be designed such that this light (of maximum amplitude $a_{yy}(1-a_{yy})$) is partially attenuated by the limited angular acceptance of the

output fibre (or offset acceptance, depending on the optical architecture). It may be shown that the attenuation, α_{TILT}, due to this tilt is given by equation 10:

$$\alpha_{TILT} = \left(d_X^2 + d_Y^2\right)\alpha_T \qquad (10)$$

where

$$\alpha_T = -\frac{5C^2 \log_{10} e}{1 - \left(C\omega/s\right)^2}$$

where C is the clipping parameter at the hologram, such that $Mp=C.\omega_{HOL}$, where ω_{HOL} is the beam spot-size at the hologram. With a switch configured for maximum wavelength range, the worst-case value of $d_X^2 + d_Y^2$ is unity. To improve crosstalk suppression, α_{TILT} should be as high as possible: thus performance is improved by increasing the value of the ratio of the spot-size to the fibre separation.

Referring to Figure 12, a second embodiment of an optical switch differs from that shown in Figure 8 by disposing a half-wave plate 150 between the two spatial light modulators 140,141. The half=wave plate exchanges for a second time the $\underline{x}$ and $\underline{y}$ polarisation components so that the residual zero order beam 151(of maximum amplitude a_{YY}) from the first SLM 140 is $\underline{x}$ polarised on reaching the second SLM 141. Of this light a first output beam 152 results from a fraction a_{XX} being deflected by twice the intended deflection angle, and there is thus no longer crosstalk directed precisely at output fibre fC. In fact this beam is deflected so it comes in at twice the tilt (or twice the offset, depending on the architecture), and

the attenuation is scaled up by a factor of 4. The rest of this polarisation-dependent zero-order light is again deflected by the intended deflection angle, and is subject to the same attenuation as for the system without a central half-wave plate.

Referring to Figure 13, a third embodiment of an optical switch according to the invention has the second SLM 141 offset by half a hologram's width in one plane (e.g. the x direction). Thus zero-order crosstalk 145, including the polarisation-dependent zero order, is directed at a point midway 149 between output fibres. In this case the zero-order crosstalk is subject to an offset of s/2, with a corresponding additional attenuation dependent on the offset.

The third embodiment is most appropriate in the presence of good surface flatness on the SLM. For the case of offset loss, it reduces as the ratio of the spot-size to the fibre separation is increased. In any final design there will be an optimum value of this ratio to obtain the overall required system performance.

Referring now to Figure 14, in a further embodiment a further reduction of the zero order is achieved by offsetting the output SLM 141 with respect to the input SLM 140 by a whole SLM's height (or more) in the direction normal to the plane of incidence. The figure shows two light beams 70a, 70b, each incident on a first SLM 140, and having a zero-order reflection from that SLM to define a respective plane of incidence. It can be seen that each plane of incidence is horizontal - the x-z plane. The output SLM 141 is offset downwardly so that zero orders do not impinge on it. Alternatively, an upward shift could be employed. This embodiment offers

resilience to the effects of bowing or long-range surface distortion of the reflective surface inside the SLM. In this case the zero orders fall outside of the output fibre array, and can be conveniently used for monitoring purposes, for example.

Now consider the polarisation-dependent doubled orders, in a 2-D system. Let these be approaching the output hologram at deflection angles (equation 11):

$$\delta(\sin\theta_X) = \frac{c_X Mp}{L} \quad and \quad \delta(\sin\theta_Y) = \frac{c_Y Mp}{L} \qquad (11)$$

In the zero-order aligned system (Figure 8) the possible values of c_X and c_Y are always even, while n_X and n_Y can take any integer values. Hence it is possible for doubled orders from the input SLM 140 to arrive at the centres of output holograms, and afterwards be focused directly, or at a tilt, into an output fibre. In the zero-order interleaved system (Figure 10), however, the possible values of c_X are always odd integers, while n_X can only take half-integer values. Hence the doubled orders from the input SLM 140 will arrive between the output holograms, and will be focused directly, or at a tilt, into points midway between output fibres. Hence zero-order interleaving also creates doubled-order interleaving.

In a preferred embodiment, the attenuation of beams arriving between the output fibres is increased by adding black paint to the glue holding the fibres together inside the fibre array. It will be understood that other absorbers could also be used. In another embodiment, the spacing between the fibres of the array is occupied by interstitial fibres which serve to accept and guide away cross talk from the switching zone.

BNSDOCID: <WO 0125840A1 >

TS0000579

The amplitude of the doubled-order beam is at most a_{XX}. In the absence of a central half-wave plate, there will be a beam of maximum amplitude a_{XX}^2 coming out at deflection angles (with reference to beams focused directly into an output fibre) given by equation 12:

$$\delta(\sin\theta_X)=\frac{(c_X-2n_X)Mp}{L} \quad and \quad \delta(\sin\theta_Y)=\frac{(c_Y-2n_Y)Mp}{L} \qquad (12)$$

The worst-case scenario is that $c_X=2n_X$, and $c_Y=2n_Y$. In this case for the zero-order aligned system (Figure 11), the beam of maximum amplitude a_{XX}^2 will be focused directly down the output fibre. While for the zero-order interleaved system (Figure 13), this beam will be focused in between the output fibres, and will therefore be subject to an offset loss.

In the presence of a central half-wave plate, a weak beam, of maximum amplitude $a_{XX}a_{YY}$, will be reflected as a zero-order reflection, and will therefore come out at deflection angles given by equation 13:

$$\delta(\sin\theta_X)=\frac{c_X Mp}{L} \quad and \quad \delta(\sin\theta_Y)=\frac{c_Y Mp}{L} \qquad (13)$$

Firstly consider what happens in the zero-order aligned system (Figure 11): this beam is attenuated at the output fibre due to the limited angular acceptance. Either c_X or c_Y could be zero, in which case the minimum value of the tilt loss at the output fibre is $4\alpha_T$.

Now consider what happens in the zero-order interleaved system (Figure 13). The worst-case is $c_Y=0$ and $c_X=1$: the beam will be attenuated by a tilt loss of α_T and also the above described offset loss. In addition, if the output SLM is offset vertically, then the minimum value of n_Y is 1, in which case the beam will additionally be attenuated by a tilt loss of 4 α_T.

Now consider the remaining light in the incident doubled order. Without a central half-wave plate, this beam will have a maximum amplitude of $a_{XX}(1-a_{XX})$, while in the presence of a central half-wave plate, this beam will have a maximum amplitude of $a_{XX}(1-a_{YY})$. With or without the central half-wave plate, this beam is deflected by the intended deflection angle, and so leaves the output hologram at a deflection angle given by equation 14:

$$\delta(\sin\theta_X)=\frac{(c_X-n_X)Mp}{L} \quad and \quad \delta(\sin\theta_Y)=\frac{(c_Y-n_Y)Mp}{L} \qquad (14)$$

For the zero-order aligned system, the worst-case is for either $c_X=n_X$ or $c_Y=n_Y$, but not both. Assume that one of these is true. The minimum attenuation is when $|c_X-n_X| = 1$ or when $|c_Y-n_Y| = 1$ and so the beam will be attenuated by a tilt loss of α_T. For the zero-order interleaved system, the minimum attenuation is when $|c_X-n_X| = 1/2$ and $|c_Y-n_Y| = 0$. The minimum attenuation is then $0.25\alpha_T$, added to the offset loss. If additionally, the output SLM 141 is offset by an odd integer number of hologram heights, then the offset loss is doubled from that previously defined, and the minimum value of $|c_Y-n_Y|$ becomes 1/2, so the tilt attenuation is increased to $0.5\alpha_T$.

To maintain desired back reflection conditions off-normal incidence is preferable: it is likely to occur in any event due to the geometrical constraints of the system. However the closer to normal incidence, the better is the performance.

Where the beam has off-normal incidence, the phase of the reflection coefficient from the mirror of the SLM becomes polarisation-dependent, due to plasmon resonances in the

metal mirror. The effect is to increase the fraction of light in each polarisation state that remains in that state after passing back through the quarter-wave plate. Another effect of off-normal incidence through the quarter-wave plate is to change, for the worse, both the effective thickness and also the birefringence. Hence a consequence of off-normal incidence is to increase the strength of the polarisation-dependent crosstalk into the zero and doubled orders.

Given off-normal incidence, it now becomes necessary to choose the plane of incidence. In this section the effects of off-normal incidence, but still in the x-z plane, are investigated.

Assume the Poynting vector of the incident light to be in the xOz plane, with a polarisation component $E_{0Y}(t)$ exp j $\varepsilon_Y(t)$ in the $\underline{y}$ direction, and $E_{0XZ}(t)$ exp j $\varepsilon_{XZ}(t)$ in the xOz plane (in a direction mutually orthogonal to $\underline{y}$ and the Poynting vector).

Let the light be incident at an angle θ_{INC} to the mirror, as shown in Figure 15, and let the long axis of the index ellipsoid be in the xOz plane, at an angle θ_D to the x-axis. A geometric method as discussed previously may be used to analyse the propagation. As before, the index ellipse is defined by the intersection of the plane perpendicular to the Poynting vector with the index ellipsoid. As long as the Poynting vector remains in the xOz plane, the light component polarised in the $\underline{y}$ direction and travelling towards the mirror ($E_{0Y}(t)$ exp j $\varepsilon_Y(t)$) experiences a refractive index n_0, that is independent of the tilt angle. This means that even if

the tilt angle is changing in the z direction, the y polarised component still perceives a constant refractive index. This index is also independent of the angle of incidence. The index experienced by the orthogonal component ($E_{0xz}(t)$ exp $j\ \varepsilon_{xz}(t)$) is the length of the major axis of this ellipse. On propagation towards the mirror the major axis is at an angle $\theta_D-\theta_{INC}$ to the director in the xOz plane: the length and direction of this axis is shown by the line AB on the figure. Mathematically the index experienced by the orthogonal component ($E_{0xz}(t)$ exp $j\ \varepsilon_{xz}(t)$) is given by substituting $\theta=\theta_D-\theta_{INC}$ into equation (1). After reflection from the mirror and passing back through the quarter wave plate it is the component $E_{0Y}(t)$ exp $j\ \varepsilon_Y(t)$ that is polarised in the xOz plane. For this second pass, the major axis of the index ellipse is now at an angle $\theta_D+\theta_{INC}$ to the director in the xOz plane: the length and direction of this axis is shown by the line AC on the figure. Mathematically the index experienced by the orthogonal component ($E_{0xz}(t)$ exp $j\ \varepsilon_{xz}(t)$) is given by substituting $\theta=\theta_D+\theta_{INC}$ into equation (1). Hence the phase delays for the two components are now given by equations 15 and 16:

E_{0xz} component:

$$\Delta\phi_{OXZ} = \Delta\phi_{1ST-PASS} + \Delta\phi_{2ND-PASS} = kn(\theta_D - \theta_{INC})d + kn_0 d \quad (15)$$

E_{0Y} component:

$$\Delta\phi_{OY} = \Delta\phi_{1ST-PASS} + \Delta\phi_{2ND-PASS} = kn_0 d + kn(\theta_D + \theta_{INC})d \quad (16)$$

Therefore the phase-modulation now has a weak polarisation dependence, which increases with the angle of incidence, and is given approximately (to second order) by equation 17:

$$\Delta\phi_{0Y} - \Delta\phi_{0XZ} = 2k\theta_{INC}\left.\frac{\partial n}{\partial\theta}\right|_{\theta_D} \quad (17)$$

In a cell in which the tilt angle is varying (as in 7), the polarisation dependence of the phase modulation is given by equation 18:

$$\Delta\phi_{0Y} - \Delta\phi_{0XZ} = \frac{2k\theta_{INC}}{d}\int_{z=0}^{d}\left.\frac{\partial n(\theta(z))}{\partial\theta}\right|_{\theta} dz \qquad (18)$$

The rate of change of n with respect to director angle is easily shown to be (equation 19):

$$\frac{\partial n}{\partial\theta} = \frac{n^3(\theta)}{2}\sin 2\theta\left(\frac{1}{{n_0}^2} - \frac{1}{{n_e}^2}\right) \qquad (19)$$

Note that for tilt angles in the range 0 to $\pi/2$, this derivative is always negative, while for tilt angles in the range $\pi/2$ to π, the derivative is always positive. For a pi cell, the tilt angle θ varies between 0 and π. Hence the polarisation-dependent phase modulations may partially cancel.

An important property of this plane of incidence, is that of the directions of the two polarisation modes. Bearing in mind that these are given by the directions of the minor and major axes of the ellipse formed by the intersection of the plane perpendicular to the Poynting vector, with the index ellipsoid, if the Poynting vector is in the x0z plane, then the minor axis is always in the $\underline{y}$ direction and the major axis is always in the x0z plane (and parallel of course to the x0z component of the incident light). Therefore the polarisation states of the $\underline{y}$ polarised and orthogonal components of the incident light are not changed inside the liquid crystal, and therefore proper polarisation component exchange should still take place at the quarter-wave plate and mirror.

Returning now to the polarisation-dependence, the effect on a beam-steering device, is to introduce a polarisation-dependence into the amplitude (but not the output angle) of each diffraction order, where this polarisation-dependence is a function of the angle of incidence. Now consider an NxN switch using two such devices, and let the SLM shown in Figure 15 be the input SLM. In order to keep the mathematics simple,, an analysis is now presented for 1-D SLMs, and hence 1-dimensional beam-steering. The results of this analysis hold good for two dimensional SLMs. Define Fourier coefficients a_{L1} and b_{L1} such that (equations 20 & 21):

$$a_{L1} = \int_{u=-\infty}^{\infty} \exp i\left\{ kn_o d + \phi(u) - kd\theta_{INC} \left.\frac{\partial n}{\partial \theta_D}\right|_{\theta_D(u)} \right\} \exp -i\left(\frac{2\pi Lu}{\Omega}\right) du \qquad (20)$$

$$b_{L1} = \int_{u=-\infty}^{\infty} \exp i\left\{ kn_o d + \phi(u) + kd\theta_{INC} \left.\frac{\partial n}{\partial \theta_D}\right|_{\theta_D(u)} \right\} \exp -i\left(\frac{2\pi Lu}{\Omega}\right) du \qquad (21)$$

where u is the position co-ordinate of each pixel, and $\phi(u)$ is the intended phase modulation, as defined immediately before equation (13). Hence for the input SLM, the $\underline{y}$ polarised component of the incident field is diffracted into orders of amplitude b_{L1}, while the orthogonal component is diffracted into orders of amplitude a_{L1}. For a well-designed hologram, almost all of the power will go into a single diffraction order.

It is assumed that the input and output SLMs are made in the same way. Now consider pixels in the two SLMs applying the same nominal phase modulation (for a normally incident beam), and hence having the same tilt angle, θ_D. Due to the geometry of the arrangement of SLMs etc, the beam entering the 1st SLM is parallel to the beam leaving the second SLM, as shown in Figure 16. Let there again be a half-wave plate between the two SLMs.

The *y* polarised component of the field incident on the 1st SLM, is polarised in the x0z plane on leaving the 1st SLM, and due to the half-wave plate is again *y* polarised on entering the second SLM. This component perceives the ordinary index n_0 on propagation towards the mirror. On propagation away from the mirror, the index perceived is given by an effective tilt angle of $\theta=\theta_D-\theta_{INC}$. Hence the total phase delay for this component is given by (equation 22):

E_{0Y} component:

$$\Delta\phi_{0Y} = \Delta\phi_{1ST-PASS} + \Delta\phi_{2ND-PASS} = kn(\theta_D - \theta_{INC})d + kn_0 d \quad (22)$$

Similarly, it can be shown that for the orthogonal polarised component (in the x0z) plane of the beam incident on the 1st SLM, the phase modulation at the second SLM is given by (equation 23):

E_{0XZ} component:

$$\Delta\phi_{OXZ} = \Delta\phi_{1ST-PASS} + \Delta\phi_{2ND-PASS} = kn_0 d + kn(\theta_D + \theta_{INC})d \quad (23)$$

At the second SLM, and assuming substantially flat SLMs, the hologram is substantially complementary to that at the first SLM. Let the intended phase modulation at the second SLM be $\phi_c(u)$, and let the director angle be $\theta_c(u)$. If at the input SLM, the hologram is designed to maximise the output into the L'th diffraction order, then at the output SLM, the hologram should maximise the output into the -L'th diffraction order. For this output SLM therefore, the Fourier coefficient b_{-L2} that defines the amplitude of the main diffraction order for the *y* polarised component of the field incident on the 1st SLM is given by (equation 24):

$$b_{-L2} = \int_{u=-\infty}^{\infty} \exp i\left\{ kn_o d + \phi_C(u) - kd\theta_{INC} \left.\frac{\partial n}{\partial \theta_C}\right|_{\theta_C(u)} \right\} \exp + i\left(\frac{2\pi Lu}{\Omega}\right) du \qquad (24)$$

while the Fourier coefficient for the main diffraction order from the output SLM for the orthogonal component of the field incident on the 1st SLM is given by (equation 25):

$$a_{-L2} = \int_{u=-\infty}^{\infty} \exp i\left\{ kn_o d + \phi_C(u) + kd\theta_{INC} \left.\frac{\partial n}{\partial \theta_C}\right|_{\theta_C(u)} \right\} \exp + i\left(\frac{2\pi Lu}{\Omega}\right) du \qquad (25)$$

The overall holographic switching efficiency for the y polarised component of the field incident on the 1st SLM is given by (equation 26):

$$\eta_{0Y} = |b_{L1}|^2 |b_{-L2}|^2 \qquad (26)$$

while the overall holographic switching efficiency for the orthogonal component of the field incident on the 1st SLM is given by (equation 27):

$$\eta_{0XZ} = |a_{L1}|^2 |a_{-L2}|^2 \qquad (27)$$

Now consider the hologram patterns, and let the local director angle, $\theta_D(u)$ be expressed in terms of some fundamental repeating pattern, $\theta_1(u)$ (equation 28):

$$\theta_D(u) = \theta_1(u) * \sum_{J=-\infty}^{\infty} \delta(J\Omega - u_0) \qquad (28)$$

Given that the intended or mean phase modulation on the 1st SLM, $\phi(u)$, depends on the local director angle (equations 1 and 7), then it must also show periodicity with the same period Ω, as must any derivatives with respect to $\theta_D(u)$ (equation 19). Therefore, taking into account the effects of off-normal incidence as in equations 20,21 etc, the net phase modulation will still

BNSDOCID: <WO 0125840A1 >

be periodic with the same period. Hence we may define $H^-(u)$ such that (equation 29) :

$$\exp i\left\{kn_o d + \phi(u) - kd\theta_{INC}\left.\frac{\partial n}{\partial \theta_D}\right|_{\theta_D(u)}\right\} = H^-(u) * \sum_{J=-\infty}^{\infty}\delta(J\Omega - u_0) \qquad (29)$$

where u_0 is some (arbitrary) origin. This origin affects the phase, but not the magnitude, of the diffraction orders. The magnitude of a_{L1} may be obtained in terms of H(u) using Fourier series analysis (equation 30):

$$|a_{L1}| = \frac{2}{\Omega}\left|\int_{-\Omega/2}^{\Omega/2} H^-(u)\exp - i\frac{2\pi Lu}{\Omega}du\right| \qquad (30)$$

Similarly, let $\theta_C(u)$ be the director angle on the 2nd hologram, and express it in terms of another fundamental repeating pattern, $\theta_2(u)$ (equation 31):

$$\theta_C(u) = \theta_2(u) * \sum_{J=-\infty}^{\infty}\delta(J\Omega - u_1) \qquad (31)$$

Therefore, using the same arguments as above, the phase modulation on the second SLM must also be periodic with period Ω, and so we may define $G^-(u)$ such that (equation 32):

$$\exp i\left\{kn_o d + \phi_C(u) - kd\theta_{INC}\left.\frac{\partial n}{\partial \theta_C}\right|_{\theta_C(u)}\right\} = G^-(u) * \sum_{J=-\infty}^{\infty}\delta(J\Omega - u_1) \qquad (32)$$

where u_1 is another arbitrary origin. Hence we may calculate the magnitude of b_{-L2} (equation 33):

$$|b_{-L2}| = \frac{2}{\Omega}\left|\int_{-\Omega/2}^{\Omega/2} G^-(u)\exp + i\frac{2\pi Lu}{\Omega}du\right| \qquad (33)$$

If we let $G^-(u)=H^-(-u)$, and make the substitution $u'=-u$, it is clear that (equation 34):

$$|a_{L1}| = |b_{-L2}| \qquad (34)$$

Physically this may be achieved by making the repeating pattern $\theta_2(u)$ on the second SLM equal to $\theta_1(-u)$ on the first SLM. In which case (from equation(1)), $\phi_C(u) = \phi(-u)$ as required. Now consider the other two amplitude coefficients. At the first SLM, define a periodic phase modulation $H^+(u)$, and use the same origin (equation 35):

$$\exp i\left\{kn_o d + \phi(u) + kd\theta_{INC}\left.\frac{\partial n}{\partial \theta_D}\right|_{\theta_D(u)}\right\} = H^+(u) * \sum_{J=-\infty}^{\infty}\delta(J\Omega - u_0) \quad (35)$$

hence we obtain b_{L1} (equation 36):

$$|b_{L1}| = \frac{2}{\Omega}\left|\int_{-\Omega/2}^{\Omega/2} H^+(u)\exp -i\frac{2\pi Lu}{\Omega}du\right| \quad (36)$$

Now, at the second SLM define a periodic phase modulation $G^+(u)$, to obtain a_{-L2} (equation 37, 38):

$$\exp i\left\{kn_o d + \phi_C(u) + kd\theta_{INC}\left.\frac{\partial n}{\partial \theta_C}\right|_{\theta_C(u)}\right\} = G^+(u) * \sum_{J=-\infty}^{\infty}\delta(J\Omega - u_1)$$

(37)

$$|a_{-L2}| = \frac{2}{\Omega}\left|\int_{-\Omega/2}^{\Omega/2} G^+(u)\exp +i\frac{2\pi Lu}{\Omega}du\right|$$

(38)

Again, as we have already chosen that (equation 39)

$$\theta_2(u) = \theta_1(-u) \quad (39)$$

then, automatically, $\phi_C(u) = \phi(-u)$, in which case $G^+(u)=H^+(-u)$, and therefore (equation 40)

$$|b_{L1}| = |a_{-L2}| \quad (40)$$

Combining (36) and (40) we may obtain (equation 41):

$$|a_{L1}||a_{-L2}| = |b_{L1}||b_{-L2}| \quad (41)$$

Hence, if the basic periodic patterns on the two SLMs are chosen to satisfy (39), and the angle of incidence is such that the Poynting vector of the light incident on

the first SLM, and leaving the second SLM, is in the plane of tilt of the director (in this case the x0z plane), the overall switch efficiencies can become polarisation-independent (equation 42):

$$\eta_{0Y} = \eta_{0XZ} \qquad (42)$$

Note that this analysis neglects the change in beam direction between holograms due to diffraction-induced beam-steering. This may create some polarisation-dependent loss, but it is expected that the configuration described is still the optimum, as it cancels the polarisation-dependence of the system as a whole due to the angle of incidence.

Given that the two orthogonal components perceive different phase modulation at each plane, the holograms must be designed that the worst-case unwanted diffraction orders do not cause unacceptable crosstalk.

There have thus been described devices and systems for optical switching which are polarisation insensitive. Embodiments of the invention as described are capable of high performance in respect of cross talk.

Claims

1. A switch comprising an integrated spatial light modulator for receiving light of a predetermined wavelength, the modulator comprising a liquid crystal layer spaced from a second layer by a layer having an optical retardance of an odd integer number of quarter-waves of said wavelength, wherein the second layer is reflective of said light of said wavelength.

2. The switch of Claim 1, wherein said liquid crystal layer is a nematic crystal layer.

3. The switch of claim 1 wherein said liquid crystal layer is a π-cell.

4. The switch of Claim 1 or 2, wherein the second layer is a metallic layer.

5. The switch of Claim 3 wherein the metallic layer is of Aluminium.

6. The switch of any preceding claim wherein said wavelength is 1.57 μm

7. A switch comprising an integrated spatial light modulator for receiving light of a predetermined wavelength, the modulator comprising a liquid crystal cell having a pair of opposed and mutually substantially parallel end plates disposed substantially parallel to an axial plane, and spaced apart by a liquid crystal layer providing a director angle tilt in a tilt plane substantially orthogonal to said axial plane, said liquid crystal being spaced from a second layer by an optical

BNSDOCID: <WO 0125840A1 >

layer having a retardance of an odd integer number of quarter-waves of said wavelength, wherein the second layer is reflective of said light of said wavelength, and the optical layer being disposed with respect to said tilt plane such that light polarised in said tilt plane returns through said liquid crystal layer polarised substantially orthogonal to said tilt plane.

8. The switch of Claim 7, wherein said liquid crystal layer is a nematic crystal layer.

9. The switch of claim 7, wherein said liquid crystal layer is a π-cell.

10 The switch of any of claims 7-9, wherein the second layer is a metallic layer.

11. The switch of Claim 10 wherein the metallic layer is of Aluminium.

13. The switch of any preceding claim, wherein the modulator has a glass cover disposed over said liquid crystal layer, and the metallic layer has a connection to driving circuitry for switching the modulator.

14. A method of switching a light beam having a first component polarised in a first direction and a second component polarised in a second direction orthogonal to the first, the method comprising providing a device having a liquid crystal layer and an integral optical retardance, the liquid crystal being responsive to a variable drive voltage to provide a corresponding variation in director angle tilt; and further comprising: applying a variable drive voltage to said liquid crystal device; applying said beam to said liquid crystal device

to provide an intermediate beam having a variable phase delay applied to said first component and an at least substantially fixed phase delay to said second component; by said retardance, rotating the polarisation of said intermediate beam; applying the resultant light to said liquid crystal device whereby a component of said resultant light polarised in said first direction receives said variable phase delay and a component of said resultant light polarised in said second direction receives said at least substantially fixed phase delay.

15. The method of Claim 14 wherein the rotating step comprises rotating said polarisation through 90 degrees whereby at least substantially equal amounts of variable phase delay are applied to each of said first and second components.

16. The method of claim 15 wherein the rotating step comprises a step of reflecting said intermediate beam back along its incoming path.

17. An optical switch comprising a plurality of input optical fibres for providing plural input light beams, a plurality of optical receivers for receiving output light beams, a first and a second reflective spatial light modulator, and drive circuitry for forming a respective plurality of switching holograms on each spatial light modulator, said holograms being selected to couple each said input optical source to a respective desired optical receiver, wherein each spatial light modulator incorporates a liquid crystal device for modulating the phase of light travelling through said liquid crystal device, a reflector device for returning light back through said liquid crystal device and a device, disposed between said liquid crystal device and said reflector

device, for rotating the polarisation of light by 90 degrees, wherein the optical switch has an axis of symmetry and the spatial light modulators are disposed on opposite sides of said axis, each said switching hologram on said first spatial light modulator being operative to deflect said input light beams to said switching holograms on said second spatial light modulator and each said switching hologram on said second spatial light modulator being operative to deflect said light beams to a respective optical receiver.

18. The switch of Claim 17, wherein each said input optical fibre is directed towards a respective switching hologram on said first spatial light modulator, and each said optical receiver comprises an output optical fibre, wherein each output optical fibre is directed towards a respective switching hologram on said second spatial light modulator.

19. The switch of Claim 17 or 18 wherein the first and second spatial light modulators are disposed such that a respective zero-order beam reflected from each switching hologram on said first spatial light modulator is incident on a respective switching hologram on said second spatial light modulator.

20. The switch of any of claims 17-19 wherein a half wave plate is disposed between said first and second spatial light modulators.

21. The switch of claim 17 wherein the switching holograms are spaced apart on said first and second spatial light modulators and the first and second spatial light modulators are disposed such that a respective zero-order beam reflected from each switching hologram on

said first spatial light modulator is incident on a spacing between two adjacent switching holograms on said second spatial light modulator.

22. The switch of any of Claims 17-21 and further comprising respective optical systems disposed between said input fibres and said first spatial light modulator and between said output fibres and said second spatial light modulator, wherein each said optical system comprises two confocal lenses, the input and output fibres being disposed in respective planes and a focal plane of a first lens of each optical system coinciding with the plane of the associated fibres.

23. The switch of any of claims 17-22 wherein the input and output fibres are disposed in respective planes and the optical switch further comprises respective arrays of microlenses, said microlenses being disposed in front of each fibre plane such that each microlens corresponds to a respective fibre, and respective optical systems disposed between said input fibres and said first spatial light modulator and between said output fibres and said second spatial light modulator, wherein each said optical system comprises two confocal lenses, and a focal plane of a first lens of each optical system coinciding with the output focal plane of the associated microlens array.

24. The switch of Claim 22 or 23 wherein said optical fibres are thermally expanded core (TEC) fibres.

25. The switch of claim 17 wherein the first and second spatial light modulators are mutually offset so that no zero order beams from the first spatial light modulator is incident on the second spatial light modulator.

TS0000595

26. The switch of claim 25, and further comprising at least one optical receiving element disposed in a region receiving said zero-order beams from said first spatial light modulator, whereby input signal may be monitored.

27. The switch of claim 26 wherein the or each element is a fibre.

28. The switch of any of Claims 17 -27 wherein each switching hologram provides a repeating pattern on its spatial light modulator, whereby the repeating patterns on the two SLMs satisfy the relation:

$$\theta_2(u) = \theta_1(-u)$$

where $\theta_2(u)$ is the repeating pattern on the second SLM and $\theta_1(-u)$ is the repeating pattern on the first SLM, and the angle of incidence is such that the Poynting vector of the input light beam incident on the first SLM, and of the light beams leaving the second SLM, is in the plane of tilt of the director.

29. The switch of any of claims 17-28 wherein the output fibres are secured together in an array by a glue containing black pigment to attenuate misaligned light.

30. The switch of any of claims 17-29 wherein the output fibres are secured together to form an array and the spacing between the fibres of the array is occupied by interstitial fibres which serve to accept and guide away cross talk from the switching zone.

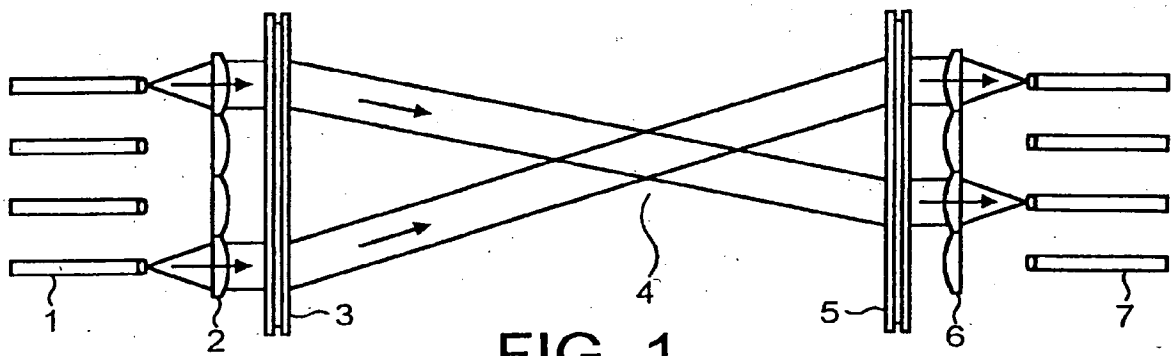

FIG. 1

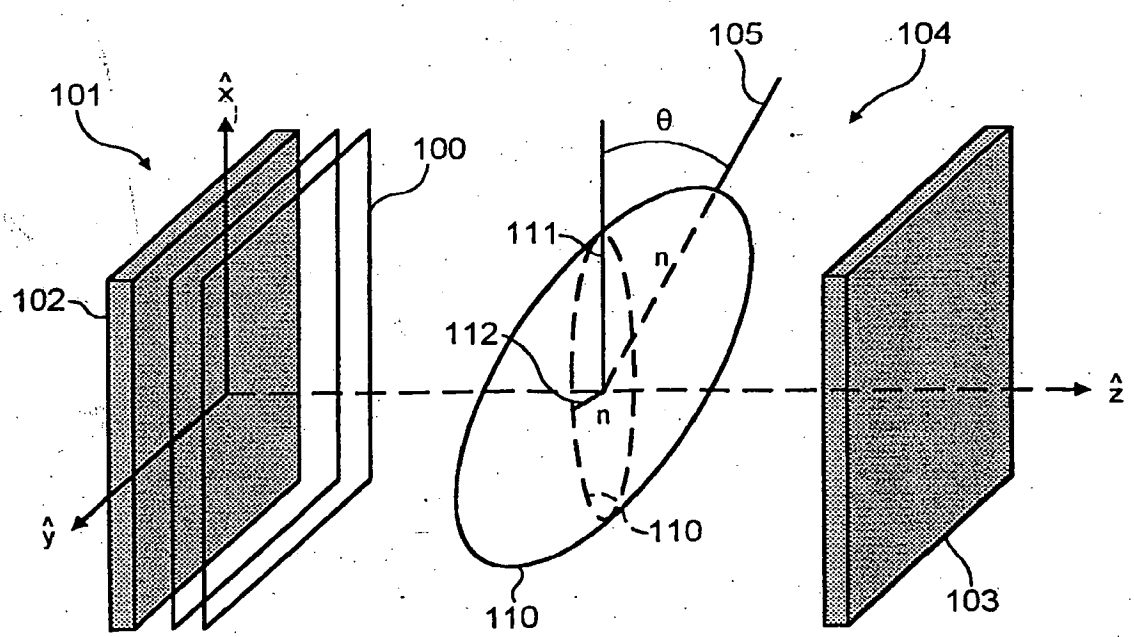

FIG. 2

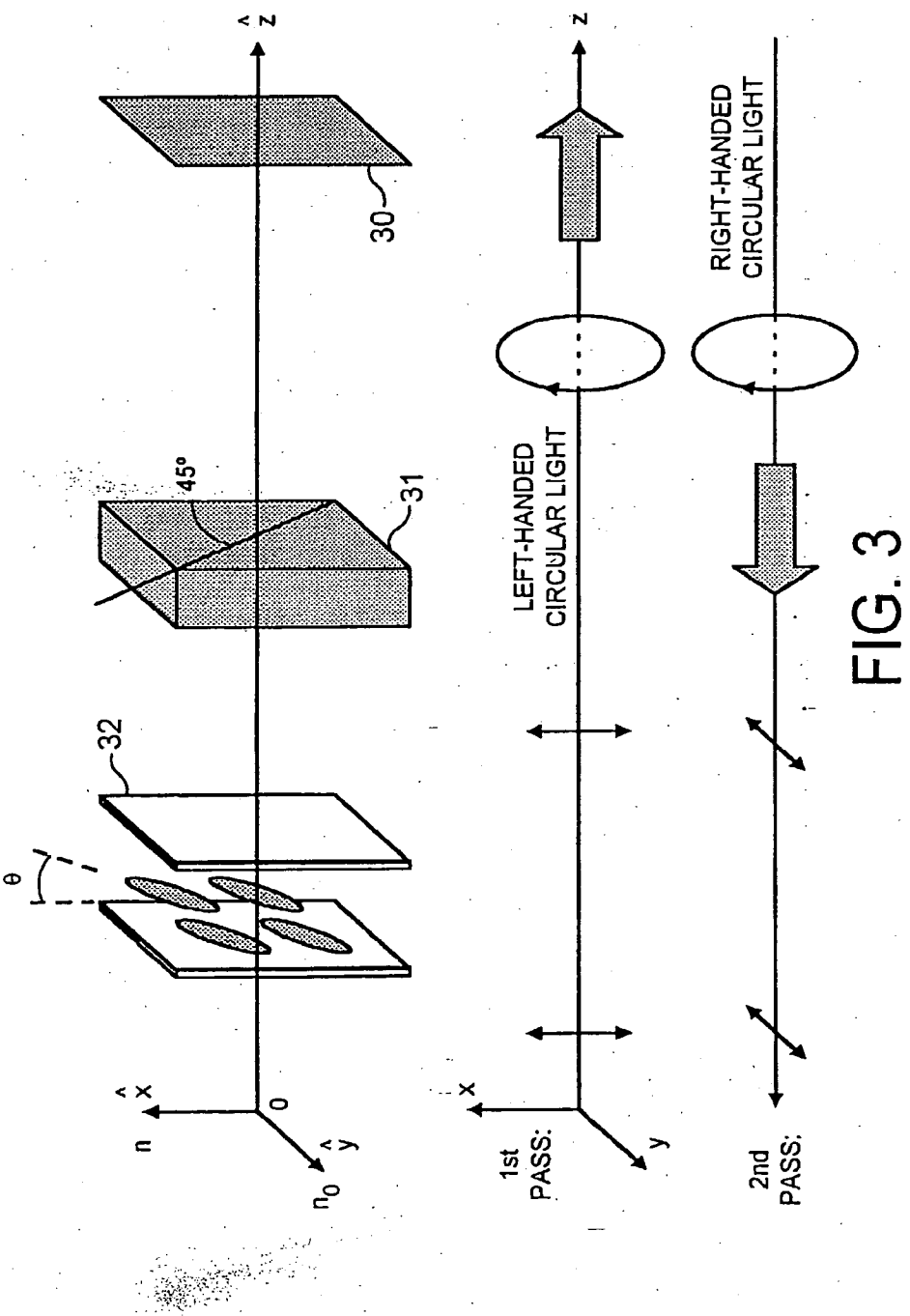
z
30
45°
31
32
θ
x
0
y
n
n_0
z
LEFT-HANDED CIRCULAR LIGHT
x
y
1st PASS:
RIGHT-HANDED CIRCULAR LIGHT
2nd PASS:

FIG. 3

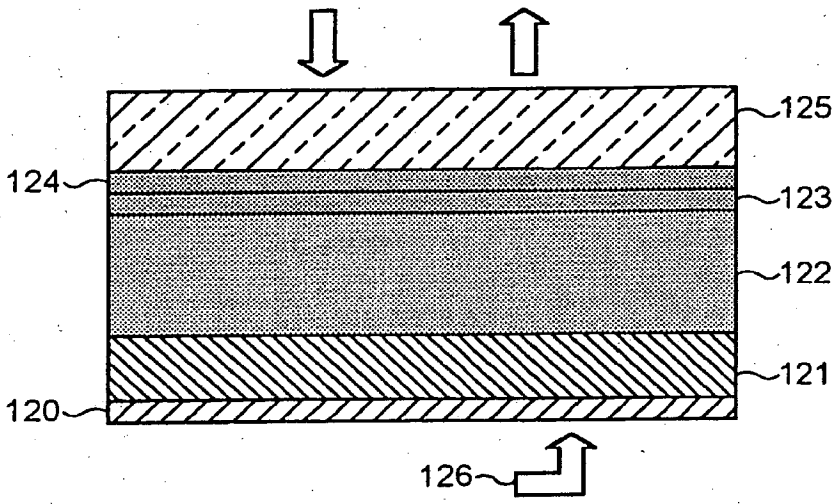

FIG. 4

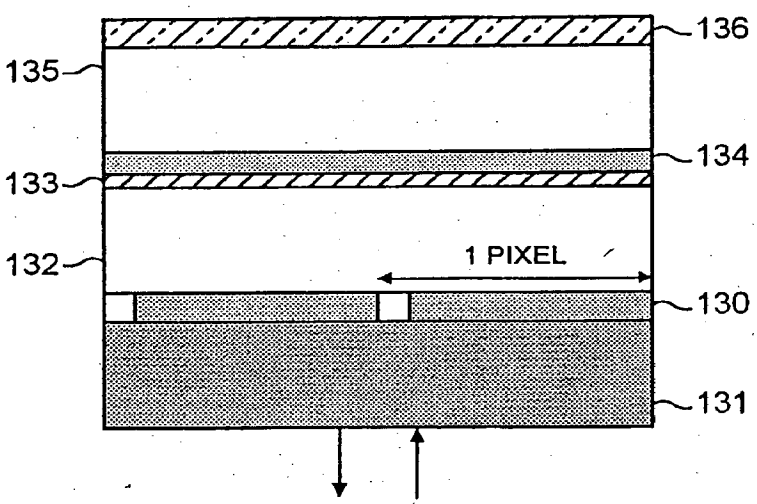

FIG. 5

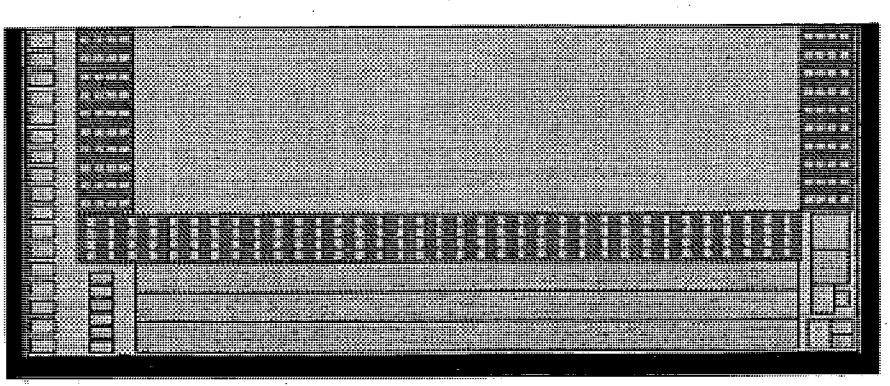

FIG. 6

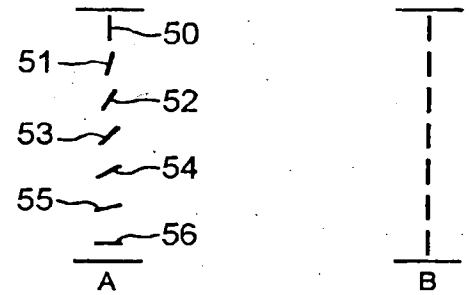

FIG. 7

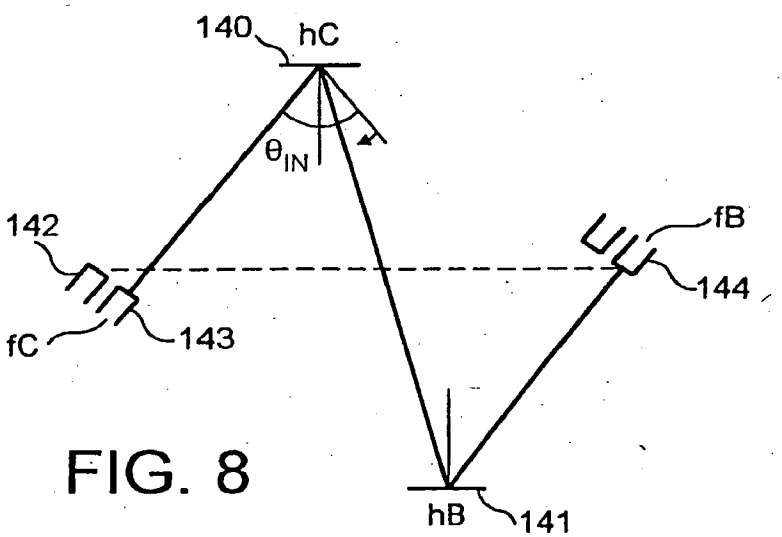

FIG. 8

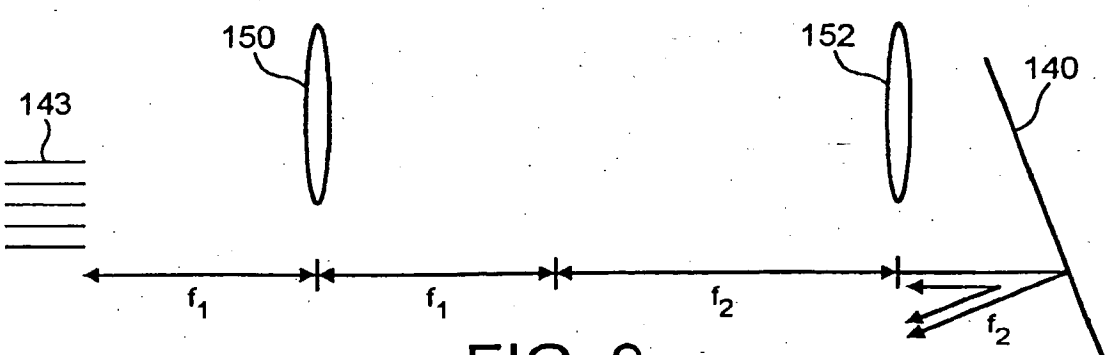

FIG. 9

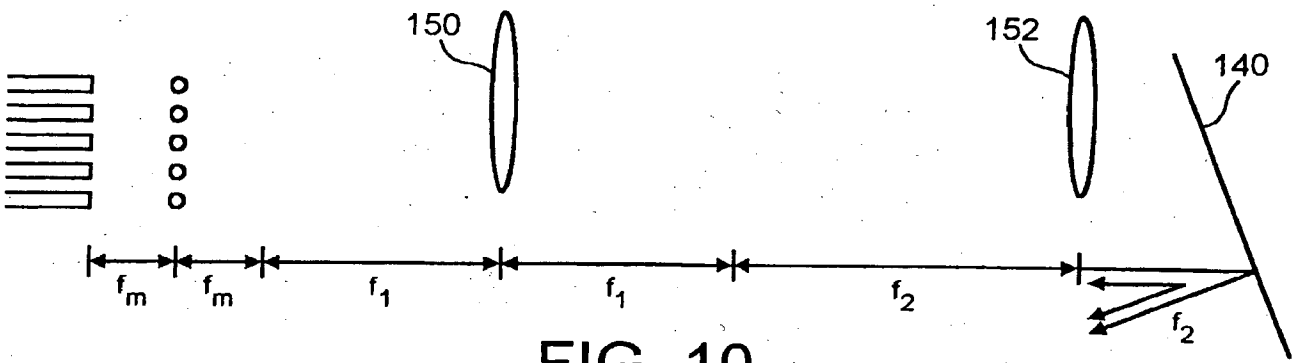

FIG. 10

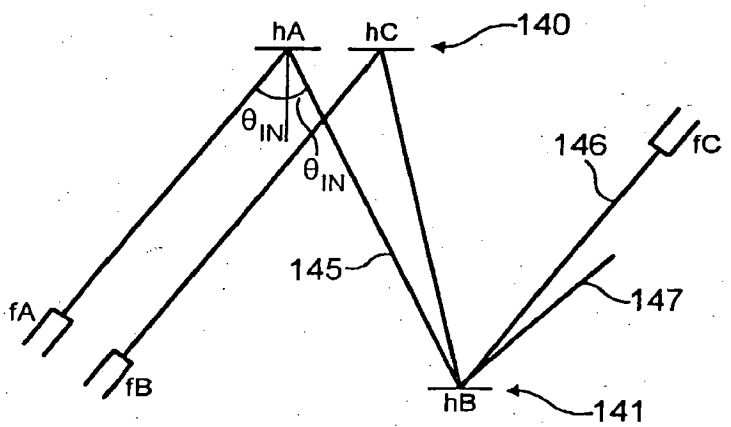

FIG. 11

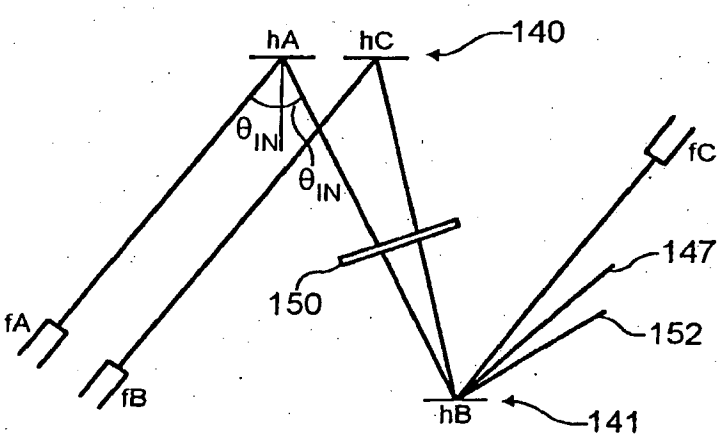

FIG. 12

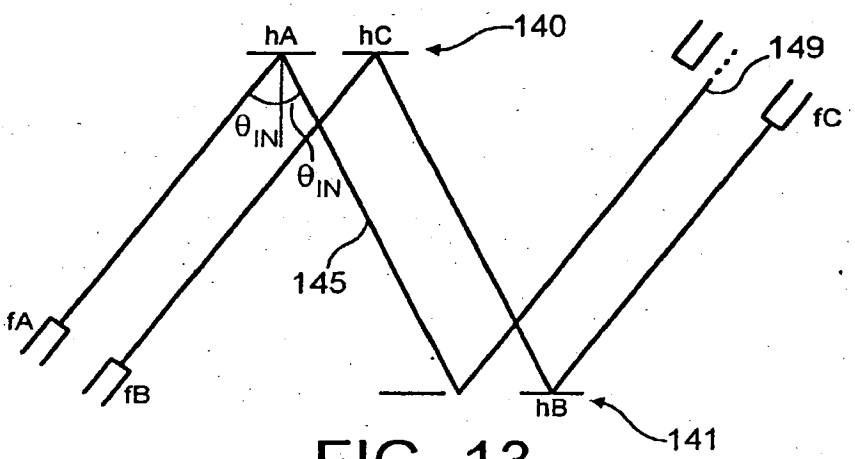

FIG. 13

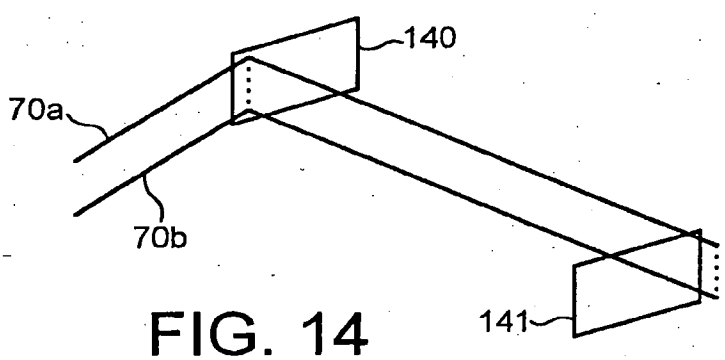

FIG. 14

BNSDOCID: <WO 0125840A1 >

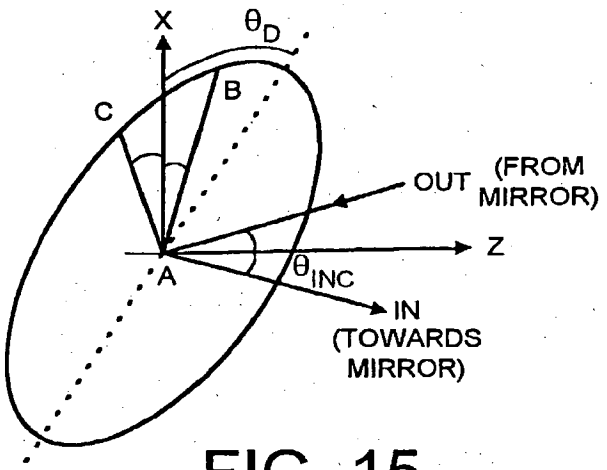
X
θ_D
B
C
OUT
(FROM MIRROR)
Z
A
θ_{INC}
IN
(TOWARDS MIRROR)

FIG. 15

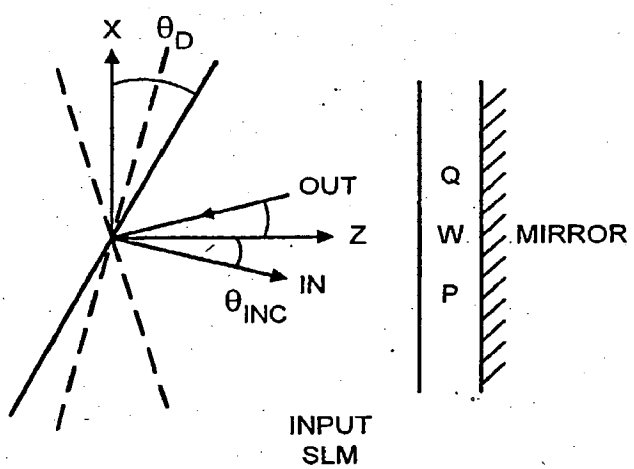
X
θ_D
OUT
Z
IN
θ_{INC}
Q
W
P
MIRROR
INPUT SLM

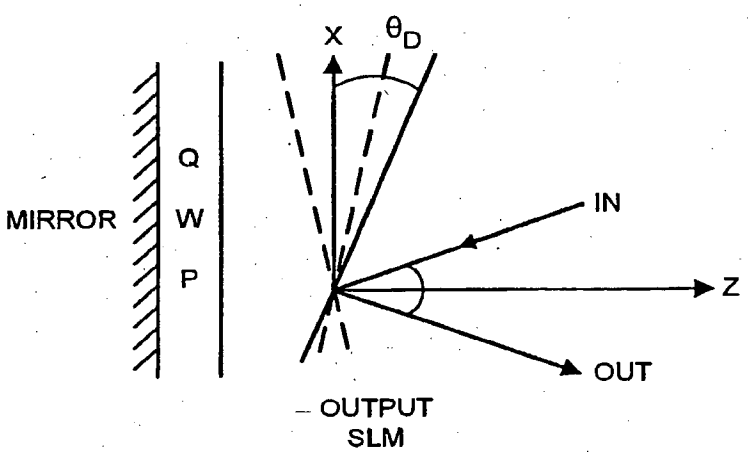
X
θ_D
MIRROR
Q
W
P
IN
Z
OUT
OUTPUT SLM

FIG. 16

INTERNATIONAL SEARCH REPORT

Inte nal Application No
PCT/GB 00/03796

A. CLASSIFICATION OF SUBJECT MATTER
IPC 7 G02F1/1335 G02F1/139 G02F1/31 G02B5/32 G03H1/08

According to International Patent Classification (IPC) or to both national classification and IPC

B. FIELDS SEARCHED

Minimum documentation searched (classification system followed by classification symbols)
IPC 7 G02F G02B

Documentation searched other than minimum documentation to the extent that such documents are included in the fields searched

Electronic data base consulted during the international search (name of data base and, where practical, search terms used)
WPI Data, PAJ, IBM-TDB, EPO-Internal, INSPEC, COMPENDEX

C. DOCUMENTS CONSIDERED TO BE RELEVANT

Category °	Citation of document, with indication, where appropriate, of the relevant passages	Relevant to claim No.
X	G.D.GORDON: "LIQUID-CRYSTAL PHASE MODULATOR FOR UNPOLARIZED LIGHT" APPLIED OPTICS, vol. 32, no. 13, 1 May 1993 (1993-05-01), pages 2222-2223, XP000362787	1,2,4,5, 7,8,10, 11,13-16
A	the whole document	17
X	EP 0 878 729 A (SHARP KK) 18 November 1998 (1998-11-18)	1-5,7-16
A	column 1, line 1 -column 3, line 35 column 5, line 20 -column 7, line 38 column 8, line 53 -column 10, line 39 column 12, line 13 - line 18; figures 7-9	17
A	US 5 930 012 A (MEARS ROBERT JOSEPH ET AL) 27 July 1999 (1999-07-27) the whole document	17,18, 22-24, 27,28

-/--

[X] Further documents are listed in the continuation of box C.

[X] Patent family members are listed in annex.

° Special categories of cited documents :

"A" document defining the general state of the art which is not considered to be of particular relevance

"E" earlier document but published on or after the international filing date

"L" document which may throw doubts on priority claim(s) or which is cited to establish the publication date of another citation or other special reason (as specified)

"O" document referring to an oral disclosure, use, exhibition or other means

"P" document published prior to the international filing date but later than the priority date claimed

"T" later document published after the international filing date or priority date and not in conflict with the application but cited to understand the principle or theory underlying the invention

"X" document of particular relevance; the claimed invention cannot be considered novel or cannot be considered to involve an inventive step when the document is taken alone

"Y" document of particular relevance; the claimed invention cannot be considered to involve an inventive step when the document is combined with one or more other such documents, such combination being obvious to a person skilled in the art.

"&" document member of the same patent family

Date of the actual completion of the international search	Date of mailing of the international search report
18 December 2000	28/12/2000

Name and mailing address of the ISA	Authorized officer
European Patent Office, P.B. 5818 Patentlaan 2 NL – 2280 HV Rijswijk Tel. (+31-70) 340-2040, Tx. 31 651 epo nl, Fax: (+31-70) 340-3016	Stang, I

Form PCT/ISA/210 (second sheet) (July 1992)

TS0000604

INTERNATIONAL SEARCH REPORT

Information on patent family members

Inter nal Application No
PCT/GB 00/03796

Patent document cited in search report	Publication date	Patent family member(s)	Publication date
EP 0878729 A	18-11-1998	GB 2325056 A	11-11-1998
		JP 10311975 A	24-11-1998
		US 5973817 A	26-10-1999
US 5930012 A	27-07-1999	AU 3573195 A	26-04-1996
		AU 3573295 A	26-04-1996
		DE 69515889 D	27-04-2000
		DE 69515889 T	07-12-2000
		EP 0783713 A	16-07-1997
		EP 0783724 A	16-07-1997
		WO 9610762 A	11-04-1996
		WO 9610776 A	11-04-1996
		US 6141361 A	31-10-2000
US 5159473 A	27-10-1992	WO 9215906 A	17-09-1992

REMARKS

Original Claims 3-10, 13 and 26 have been amended. A "Related Applications" paragraph has been added. No new matter has been added.

Information Disclosure Statement

An Information Disclosure Statement (IDS) is being filed concurrently herewith to cite references from the PCT Search report and references cited in the application. Entry of the IDS is respectfully requested.

CONCLUSION

Entry of the Preliminary Amendment is respectfully requested. If the Examiner feels that a telephone conference would expedite prosecution of this case, the Examiner is invited to call the undersigned at (978) 341-0036.

Respectfully submitted,

HAMILTON, BROOK, SMITH & REYNOLDS, P.C.

By _____
Timothy J. Meagher
Registration No. 39,302
Telephone: (978) 341-0036
Facsimile: (978) 341-0136

Concord, MA 01742-9133
Dated: 2/26/04

Amendments to the Claims

Please amend Claims 3-10, 13 and 26. The Claim Listing below will replace all prior versions of the claims in the application:

Claim Listing

1. (Original) A method of operating an optical device comprising an SLM having a two-dimensional array of controllable phase-modulating elements, the method comprising

delineating groups of individual phase-modulating elements;

selecting, from stored control data, control data for each group of phase-modulating elements;

generating from the respective selected control data a respective hologram at each group of phase-modulating elements; and

varying the delineation of the groups and/or the selection of control data

whereby upon illumination of said groups by respective light beams, respective emergent light beams from the groups are controllable independently of each other.

2. (Original) A method of operating an optical device according to clam 1, wherein control of said light beams is selected from the group comprising:

control of direction, control of power, focussing, aberration compensation, sampling and beam shaping.

3. (Currently Amended) A method of operating an optical device according to claim 1 [[or 2]], wherein each phase modulating element is responsive to a respective applied voltage to provide a corresponding phase shift to emergent light, the method further comprising

controlling said phase-modulating elements of the spatial light modulator to provide respective actual holograms derived from the respective generated holograms, wherein the controlling step comprises:

resolving the respective generated holograms modulo 2pi.

4. (Currently Amended) A method of operating an optical device according to claim 1, [[2 or 3,]] comprising:

providing a discrete number of voltages available for application to each phase modulating element;

on the basis of the respective generated holograms, determining the desired level of phase modulation at a predetermined point on each phase modulating element and choosing for each phase modulating element the available voltage which corresponds most closely to the desired level.

5. (Currently Amended) A method of operating an optical device according to claim 1, [[2 or 3,]] comprising:

providing a discrete number of voltages available for application to each phase modulating element;

determining a subset of the available voltages which provides the best fit to the generated hologram.

6. (Currently Amended) A method of operating an optical device according to claim 1 ~~any preceding claim~~, further comprising the step of storing said control data wherein the step of storing said control data comprises calculating an initial hologram using a desired direction change of a beam of light, applying said initial hologram to a group of phase modulating elements, and correcting the initial hologram to obtain an improved result.

7. (Currently Amended) A method of operating an optical device according to claim 1 ~~any preceding claim~~, further comprising the step of providing sensors for detecting temperature change, and performing said varying step in response to the outputs of those sensors.

8. (Currently Amended) A method of operating an optical device according to claim 1 ~~any preceding claim~~, in which the SLM is integrated on a substrate and has an integrated quarter-wave plate whereby it is substantially polarisation insensitive.

9. (Currently Amended) A method of operating an optical device according to claim 1 ~~any preceding claim~~, wherein the phase-modulating elements are substantially reflective, whereby emergent beams are deflected from the specular reflection direction.

10. (Currently Amended) A method of operating an optical device according to claim 3 ~~or any claim dependent on claim 3~~ comprising, for at least one said group of phase-modulating elements, providing control data indicative of two holograms to be displayed by said group and generating a combined hologram before said resolving step.

11. (Original) An optical device comprising an SLM and a control circuit, the SLM having a two-dimensional array of controllable phase-modulating elements and the control circuit having a store constructed and arranged to hold plural items of control data, the control circuit being constructed and arranged to delineate groups of individual phase-modulating elements, to select, from stored control data, control data for each group of phase-modulating elements, and to generate from the respective selected control data a respective hologram at each group of phase-modulating elements,

wherein the control circuit is further constructed and arranged to vary the delineation of the groups and/or the selection of control data,

whereby upon illumination of said groups by respective light beams, respective emergent light beams from the groups are controllable independently of each other.

12. (Original) An optical device according to claim 11, having sensor devices arranged to detect light emergent from the SLM, the control circuit being responsive to signals from the sensors to vary said delineation and/or said selection.

13. (Currently Amended) An optical device according to claim 11 [[or 12]], having temperature responsive devices constructed and arranged to feed signals indicative of

device temperature to said control circuit, whereby said delineation and/or selection is varied.

14. (Original) An optical routing device having at least first and second SLMs and a control circuit, the first SLM being disposed to receive respective light beams from an input fibre array, and the second SLM being disposed to receive emergent light from the first SLM and to provide light to an output fibre array, the first and second SLMs each having a respective two-dimensional array of controllable phase-modulating elements and the control circuit having a store constructed and arranged to hold plural items of control data, the control circuit being constructed and arranged to delineate groups of individual phase-modulating elements, to select, from stored control data, control data for each group of phase-modulating elements, and to generate from the respective selected control data a respective hologram at each group of phase-modulating elements,

wherein the control circuit is further constructed and arranged, to vary the delineation of the groups and/or the selection of control data

whereby upon illumination of said groups by respective light beams, respective emergent light beams from the groups are controllable independently of each other.

15. (Original) A device for shaping one or more light beams in which the or each light beam is incident upon a respective group of pixels of a two-dimensional SLM, and the pixels of the or each respective group are controlled so that the corresponding beams emerging from the SLM are shaped as required.

16. (Original) An optical device comprising one or more optical inputs at respective locations, a diffraction grating constructed and arranged to receive light from the or each optical input, a focussing device and a continuous array of phase modulating elements, the diffraction grating and the array of phase modulating elements being disposed in the focal plane of the focussing device whereby diverging light from a single point on the diffraction grating passes via the focussing device to form beams at the array of phase modulating elements, the device further comprising one or more

optical output at respective locations spatially separate location from the or each optical input, whereby the diffraction grating is constructed and arranged to output light to the or each optical output.

17. (Original) A method of filtering light comprising applying a beam of said light to a diffraction grating whereby emerging light from the grating is angularly dispersed by wavelength, forming respective parallel beams from said emerging light by passing the emerging light to a focussing device having the grating at its focal plane, passing the respective parallel beams to an SLM at the focal plane of the focussing device, the SLM having a two-dimensional array of controllable phase-modulating elements, selectively reflecting light from different locations of said SLM and passing said reflected light to said focussing device and then to said grating.

18. (Original) A method according to claim 17 comprising delineating groups of individual phase-modulating elements to receive beams of light of differing wavelength;

selecting, from stored control data, control data for each group of phase-modulating elements;

generating from the respective selected control data a respective hologram at each group of phase-modulating elements; and

varying the delineation of the groups and/or the selection of control data.

19. (Original) An optical add/drop multiplexer having a reflective SLM having a two-dimensional array of controllable phase-modulating elements, a diffraction device and a focussing device wherein light beams from a common point on the diffraction device are mutually parallel when incident upon the SLM, and wherein the SLM displays respective holograms at locations of incidence of light to provide emergent beams whose direction deviates from the direction of specular reflection.

20. (Original) A test or monitoring device comprising an SLM having a two-dimensional array of pixels, and operable to cause incident light to emerge in a direction deviating

from the specular direction, the device having light sensors at predetermined locations arranged to provide signals indicative of said emerging light.

21. (Original) A test or monitoring device according to claim 20, further comprising further sensors arranged to provide signals indicative of light emerging in the specular directions.

22. (Original) A power control device for one or more beams of light in which the or each beam is incident on respective groups of pixels of a two-dimensional SLM, and power-control holograms are applied to the respective groups so that the emergent beams have power reduced by comparison to the respective incident beams.

23. (Original) An optical routing module having at least one input and at least two outputs and operable to select between the outputs, the module comprising a two dimensional SLM having an array of pixels, with circuitry constructed and arranged to display holograms on the pixels to route beams of different frequency to respective outputs.

24. (Original) A routing device having an input and plural outputs, the input constructed and arranged to receive a light beam having plural wavelengths, the device comprising an optical device for selecting the wavelengths of the input beam to appear in the outputs, wherein each output may contain any desired set of the plural wavelengths.

25. (Original) A routing device according to claim 24, wherein the members of the desired set may be varied in use.

26. (Currently Amended) A routing device according to claim 24 [[or 25]], wherein at least two of the outputs contain at least one common wavelength.

27. (Original) A routing device having plural input signals and an output, the output constructed and arranged to deliver a signal having plural wavelengths, the device comprising a device for combining the wavelengths from the input signals to appear

in the output, wherein each input signal may contain any desired set of the plural wavelengths of the output.

28. (Original) A method of filtering light comprising spatially distributing the light by wavelength across an array of phase-modulating elements to form plural beams, delineating a group of said phase-modulating elements to be aligned with the centre frequency of a desired channel whereby the group truncates the beams according to wavelength, controlling the group to provide images of the truncated light beams incident on the group at a selected output waveguide wherein the original centres of the truncated light beams are substantially coincident with the centre of the output waveguide.

Amendments to the Specification

Please add the following "Related Applications" paragraph after the Title at page 1, line 3:

RELATED APPLICATIONS

This application is the U.S. National Stage of International Application No. PCT/GB02/04011, filed 2 September 2002, published in English, which application claims priority under 35 U.S.C. § 119 or 365 to Great Britain Application No. 0121308.1, filed 3 September 2001, the entire teachings of the above referenced applications are incorporated herein by reference.

@PFDesktop\::ODMA/MHODMA/HBSR05;iManage;455803;1
TJM/jk
02/26/04

PT12 Rec'd PCT/PTO 26 FEB 2004

IN THE UNITED STATES RECEIVING OFFICE (RO/US)
Designated/Elected Office (DO/EO/US)

U.S. National Stage of International Application No.:	PCT/GB02/04011
International Filing Date:	2 September 2002
Earliest Priority Date:	3 September 2001
Applicants:	Melanie Holmes
Title:	OPTICAL PROCESSING
Attorney's Docket No.:	3274.1003-000

Date: 26 February 2004

EXPRESS MAIL LABEL NO. EV 214 917708 US

PRELIMINARY AMENDMENT

Mail Stop PCT
Commissioner for Patents
P.O. Box 1450
Alexandria, VA 22313-1450

Sir:

Please amend the application as follows:

PATENT APPLICATION FEE DETERMINATION RECORD
Effective October 1, 2003

Application or Docket Number
10/487810

CLAIMS AS FILED - PART I

	(Column 1)	(Column 2)
TOTAL CLAIMS		
FOR	NUMBER FILED	NUMBER EXTRA
TOTAL CHARGEABLE CLAIMS	28 minus 20=	* 8
INDEPENDENT CLAIMS	13 minus 3 =	* 10
MULTIPLE DEPENDENT CLAIM PRESENT		☐

* If the difference in column 1 is less than zero, enter "0" in column 2

SMALL ENTITY TYPE ☐☑ OR OTHER THAN SMALL ENTITY

RATE	FEE	OR	RATE	FEE
BASIC FEE	460	OR	BASIC FEE	
XS 9=	72	OR	XS18=	
X43=	430	OR	X86=	
+145=		OR	+290=	
TOTAL	962	OR	TOTAL	

CLAIMS AS AMENDED - PART II

AMENDMENT A

	(Column 1) CLAIMS REMAINING AFTER AMENDMENT		(Column 2) HIGHEST NUMBER PREVIOUSLY PAID FOR	(Column 3) PRESENT EXTRA
Total	*	Minus	**	=
Independent	*	Minus	***	=
FIRST PRESENTATION OF MULTIPLE DEPENDENT CLAIM				☐

SMALL ENTITY OR OTHER THAN SMALL ENTITY

RATE	ADDITIONAL FEE	OR	RATE	ADDITIONAL FEE
XS 9=		OR	XS18=	
X43=		OR	X86=	
+145=		OR	+290=	
TOTAL ADDIT. FEE		OR	TOTAL ADDIT. FEE	

AMENDMENT B

	(Column 1) CLAIMS REMAINING AFTER AMENDMENT		(Column 2) HIGHEST NUMBER PREVIOUSLY PAID FOR	(Column 3) PRESENT EXTRA
Total	*	Minus	**	=
Independent	*	Minus	***	=
FIRST PRESENTATION OF MULTIPLE DEPENDENT CLAIM				☐

RATE	ADDITIONAL FEE	OR	RATE	ADDITIONAL FEE
XS 9=		OR	XS18=	
X43=		OR	X86=	
+145=		OR	+290=	
TOTAL ADDIT. FEE		OR	TOTAL ADDIT. FEE	

AMENDMENT C

	(Column 1) CLAIMS REMAINING AFTER AMENDMENT		(Column 2) HIGHEST NUMBER PREVIOUSLY PAID FOR	(Column 3) PRESENT EXTRA
Total	*	Minus	**	=
Independent	*	Minus	***	=
FIRST PRESENTATION OF MULTIPLE DEPENDENT CLAIM				☐

RATE	ADDITIONAL FEE	OR	RATE	ADDITIONAL FEE
X$ 9=		OR	X$18=	
X43=		OR	X86=	
+145=		OR	+290=	
TOTAL ADDIT. FEE		OR	TOTAL ADDIT. FEE	

* If the entry in column 1 is less than the entry in column 2, write "0" in column 3.
** If the "Highest Number Previously Paid For" IN THIS SPACE is less than 20, enter "20."
*** If the "Highest Number Previously Paid For" IN THIS SPACE is less than 3, enter "3."
The "Highest Number Previously Paid For" (Total or Independent) is the highest number found in the appropriate box in column 1.

PATENT APPLICATION SERIAL NO. 10/487810

U.S. DEPARTMENT OF COMMERCE
PATENT AND TRADEMARK OFFICE
FEE RECORD SHEET

03/02/2004 GFREY1 00000103 10487810

~~01 FC:1613~~ ~~920.00 OP~~
~~02 FC:1615~~ ~~144.00 OP~~
~~03 FC:1614~~ ~~860.00 OP~~

Adjustment date: 09/23/2004 GFREY1
03/02/2004 GFREY1 00000103 10487810
01 FC:1613 -920.00 OP
02 FC:1615 -144.00 OP
03 FC:1614 -860.00 OP

09/23/2004 GFREY1 00000006 10487810

01 FC:2613 460.00 OP
02 FC:2615 72.00 OP
03 FC:2614 430.00 OP

Repln. Ref: 09/23/2004 GFREY1 0014574800
DA#:080380 Name/Number:10487810
FC: 9204 $962.00 CR

PTO-1556
(5/87)

*U.S. Government Printing Office: 2002 — 489-267/69033

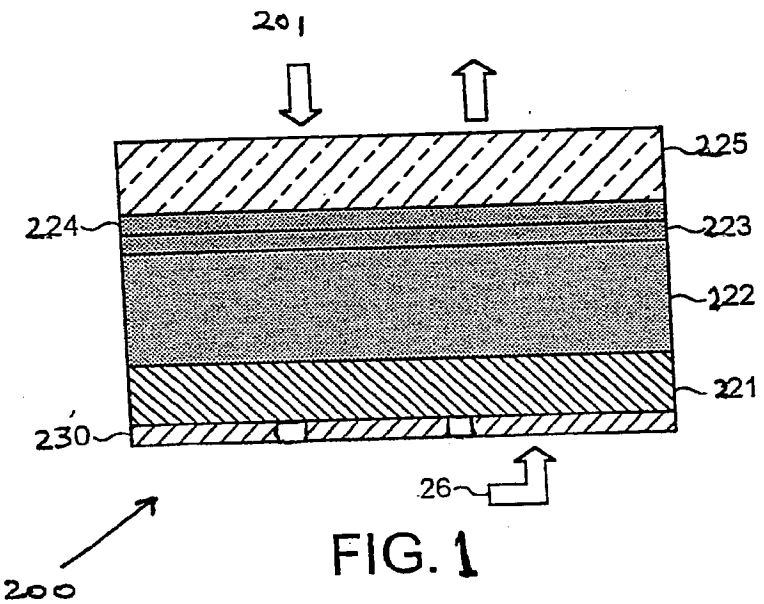

FIG. 1

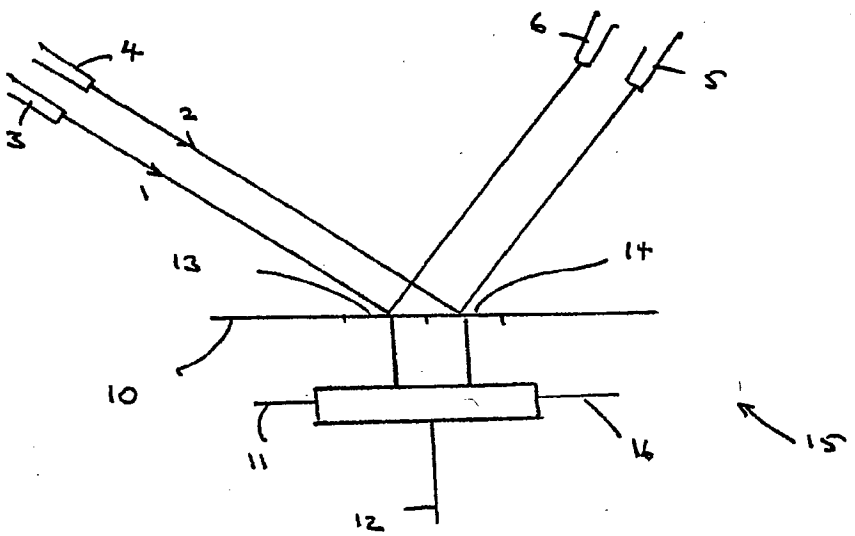

FIG 2

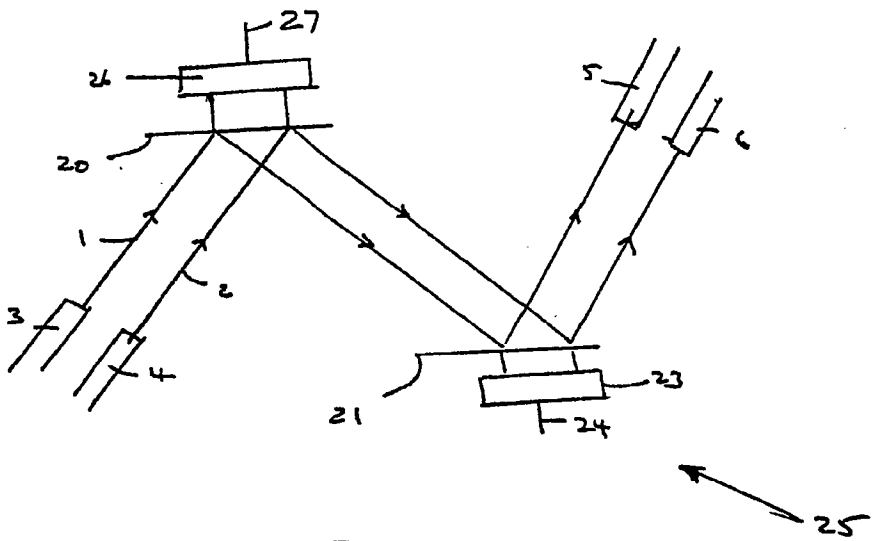

FIG 3

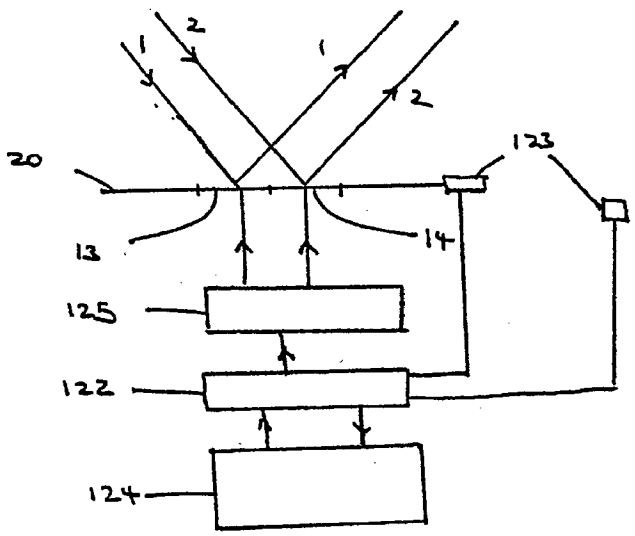

FIG 4

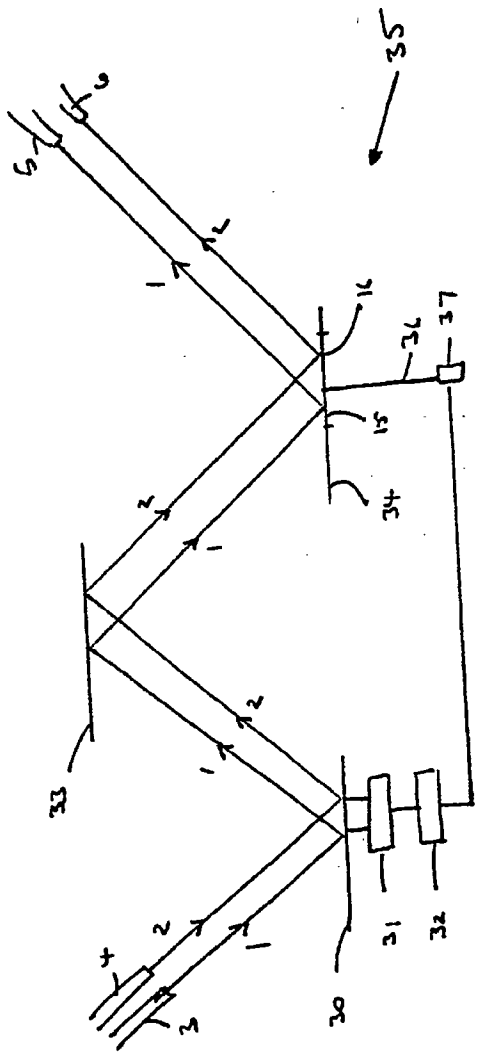

FIG 5

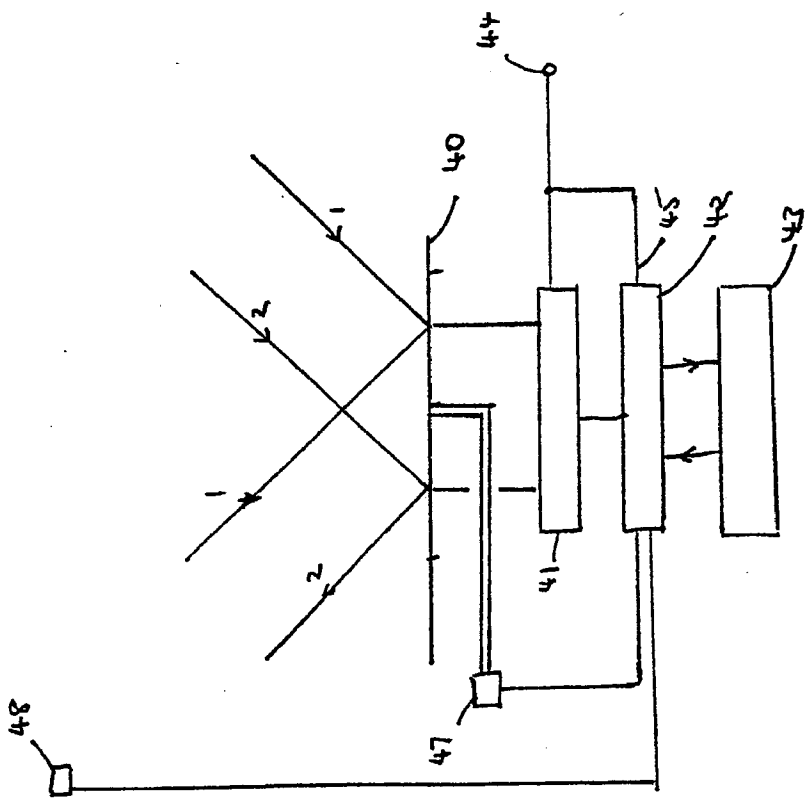

Fig-4

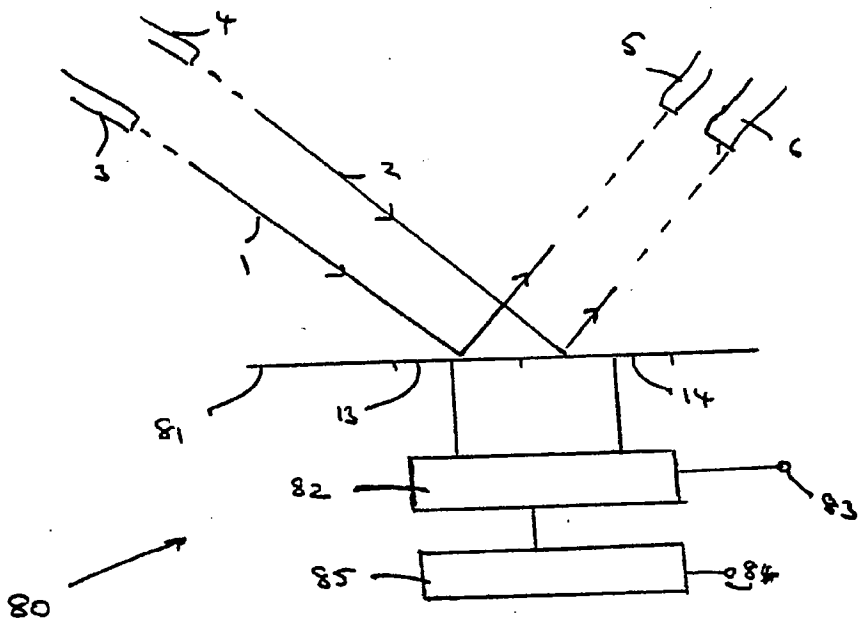

Fig 7

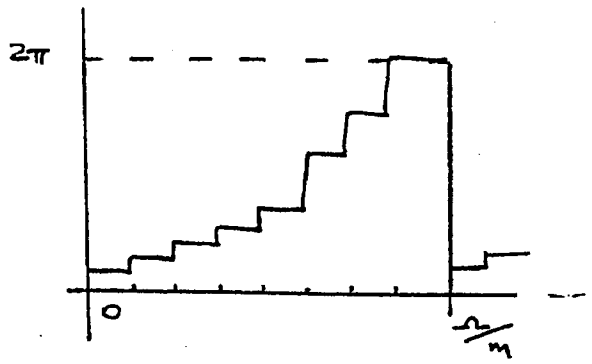

FIG 8a

FIG 8b

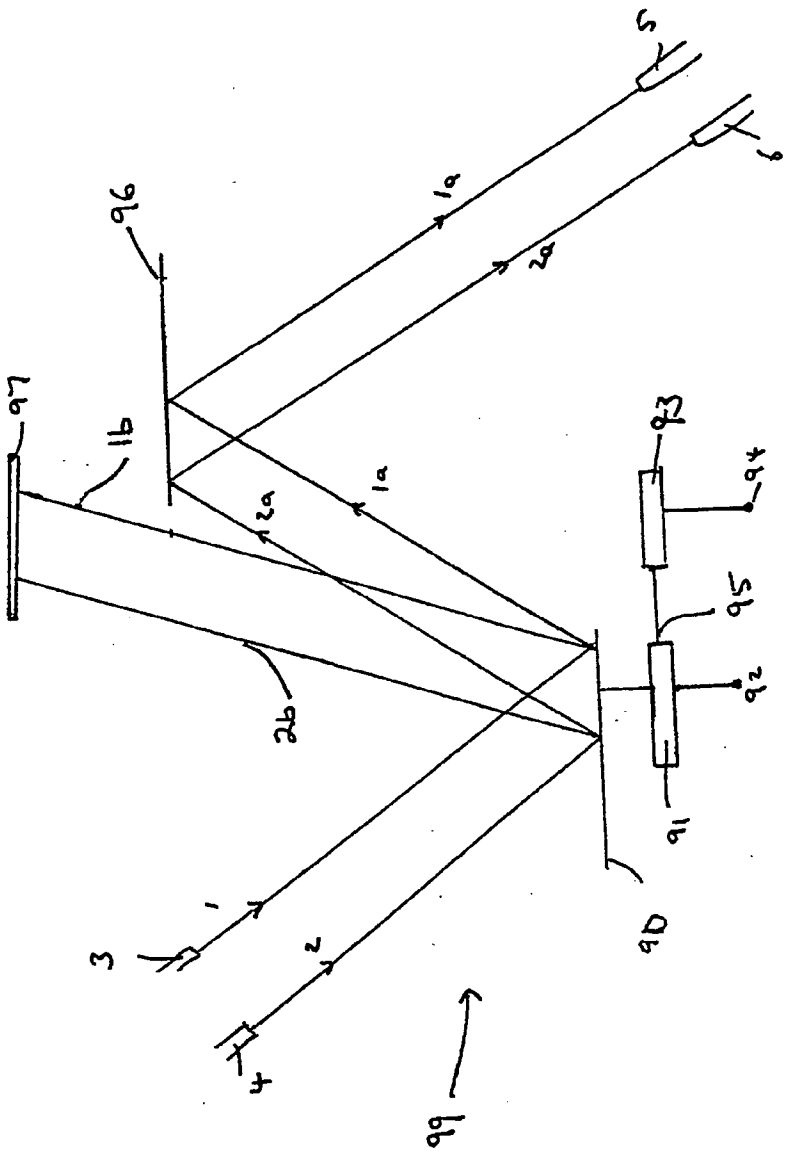

Fig 9

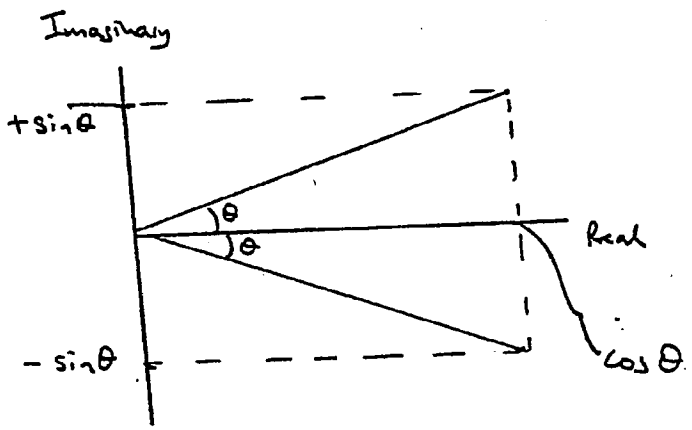

Fig 10

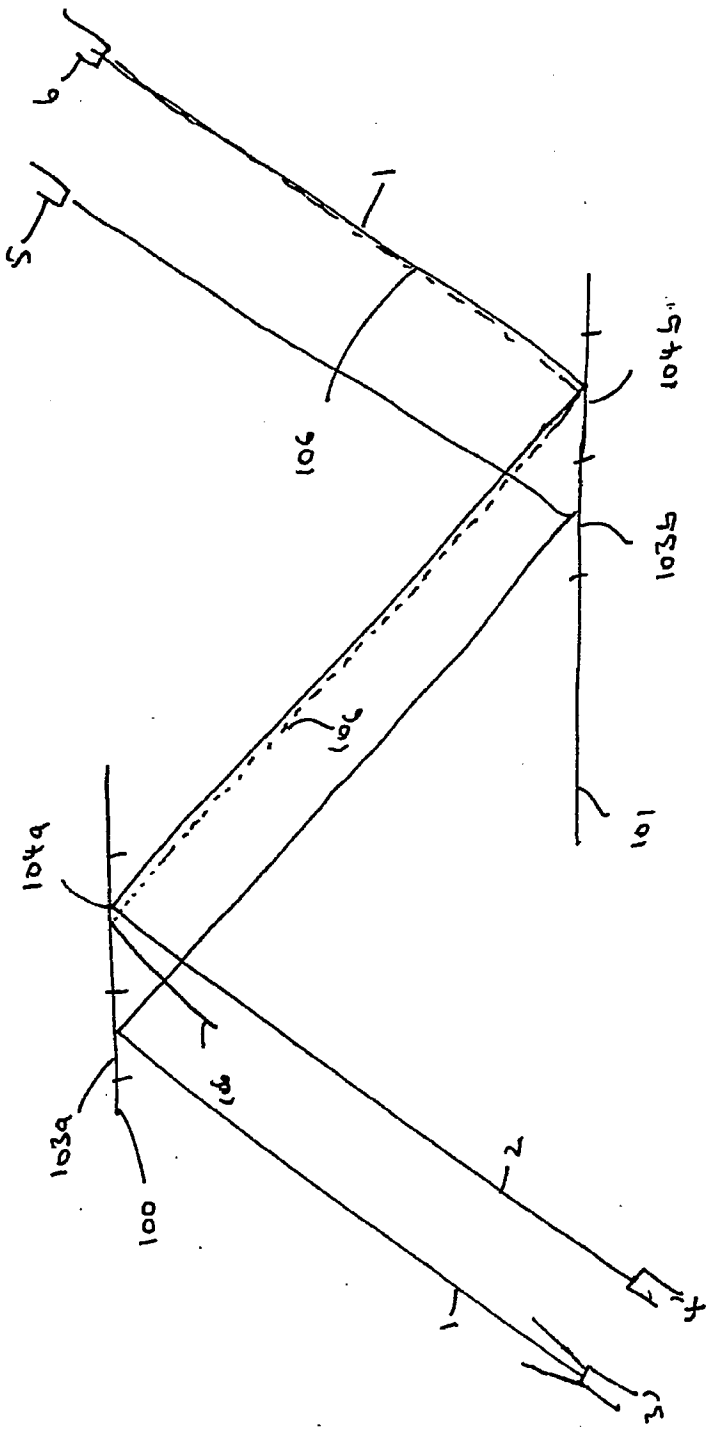

FIG 11

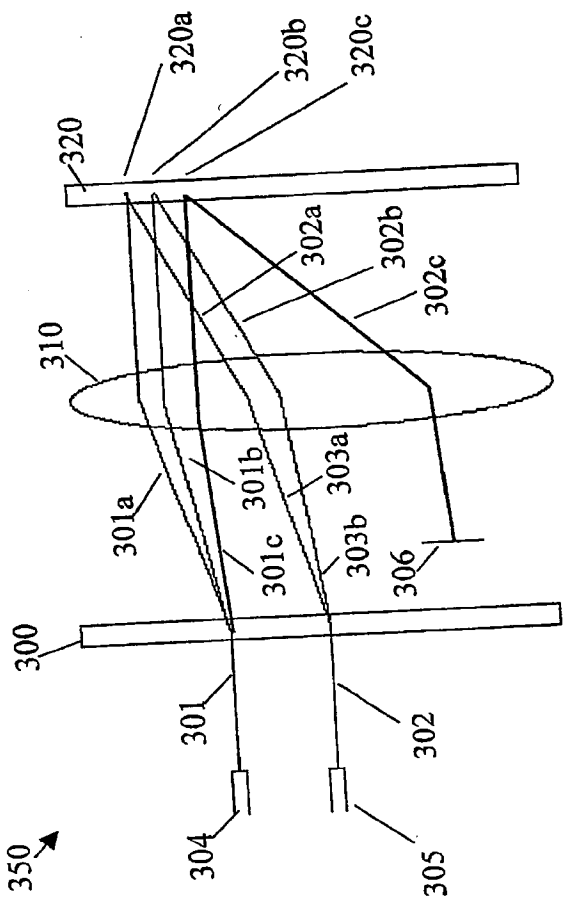
320a
320b
320c
320
302a
302b
302c
310
301b
303a
301a
301c
303b
306
300
301
302
350
304
305

Figure 12

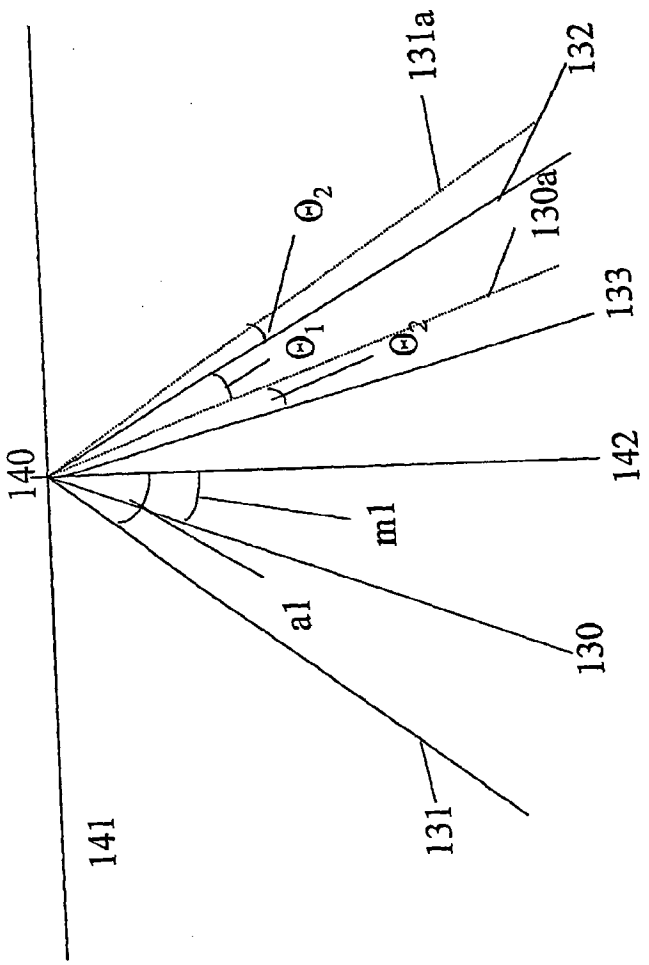
140
141
131a
132
130a
133
142
130
131
m1
a1
Θ_2
Θ_1
Θ_2

Figure 13a

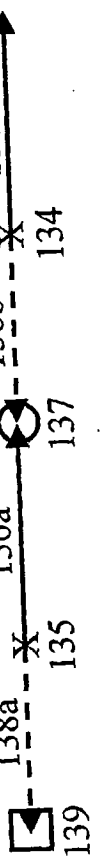

Figure 13b

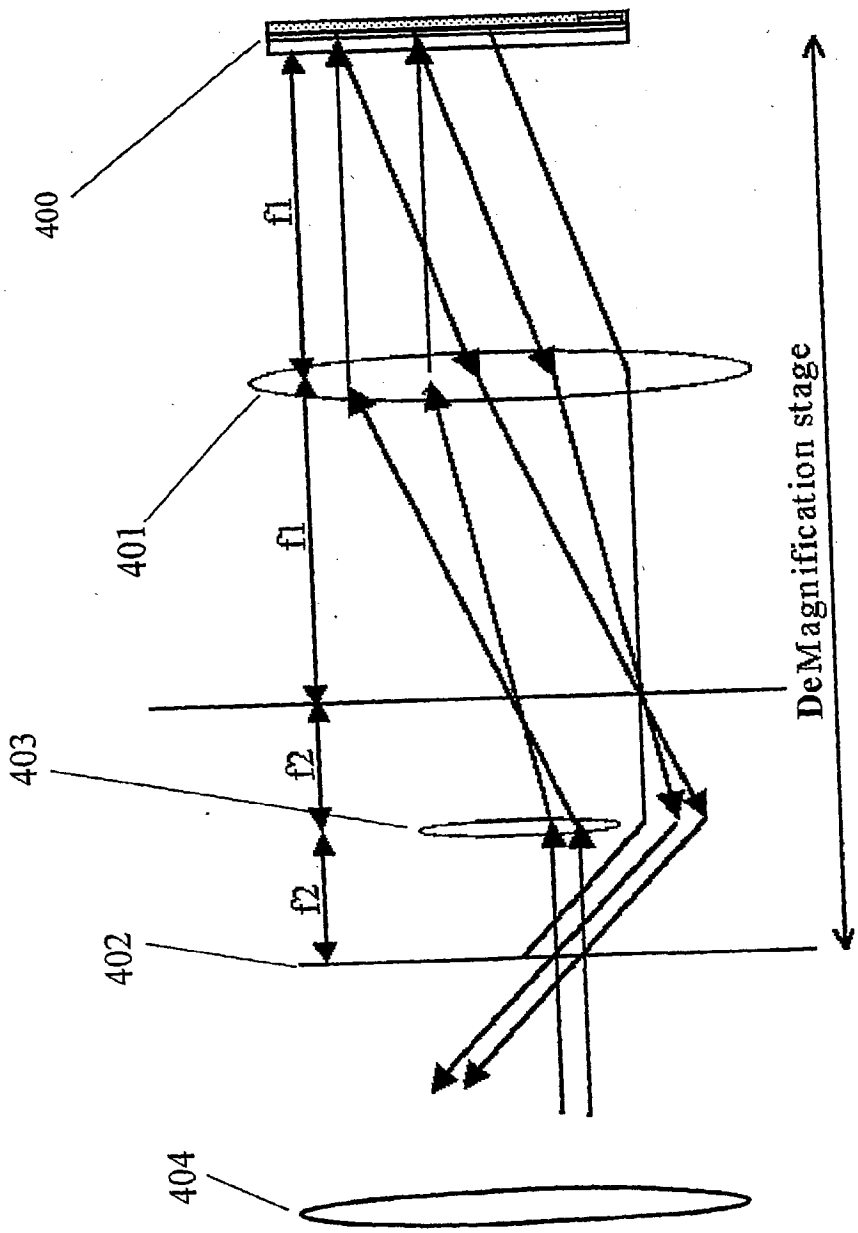

Figure 14

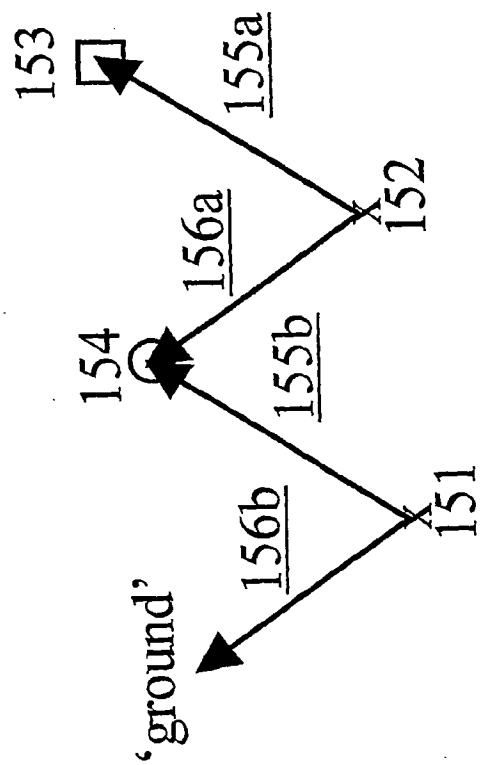

Figure 15

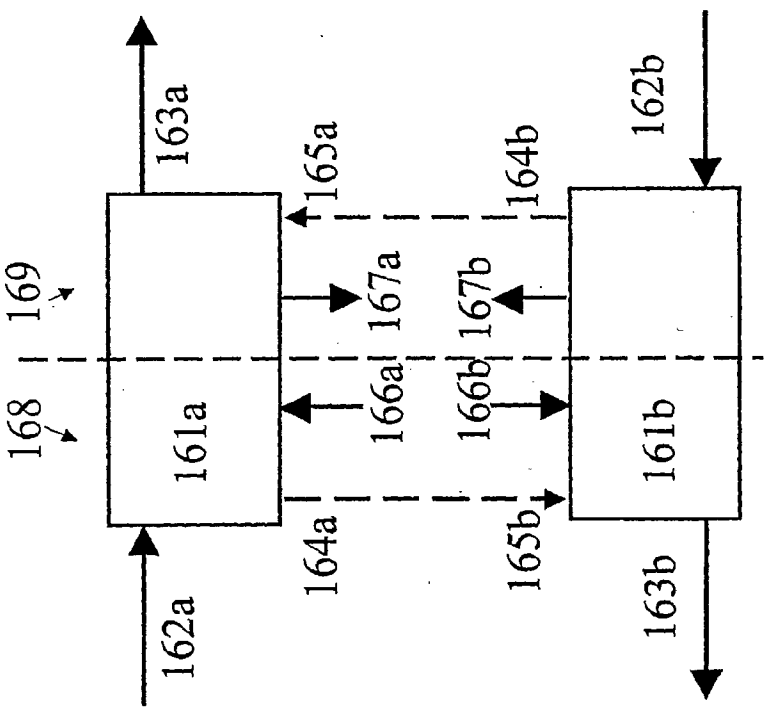
163a
165a
164b
162b
169
167a
167b
168
166a
166b
161a
161b
164a
165b
162a
163b

Figure 16

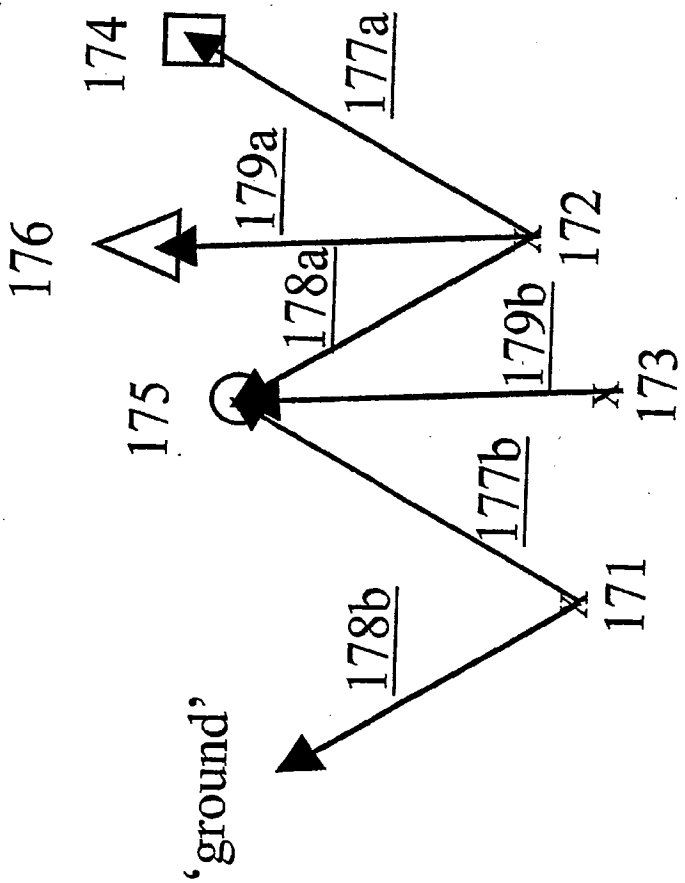

Figure 17

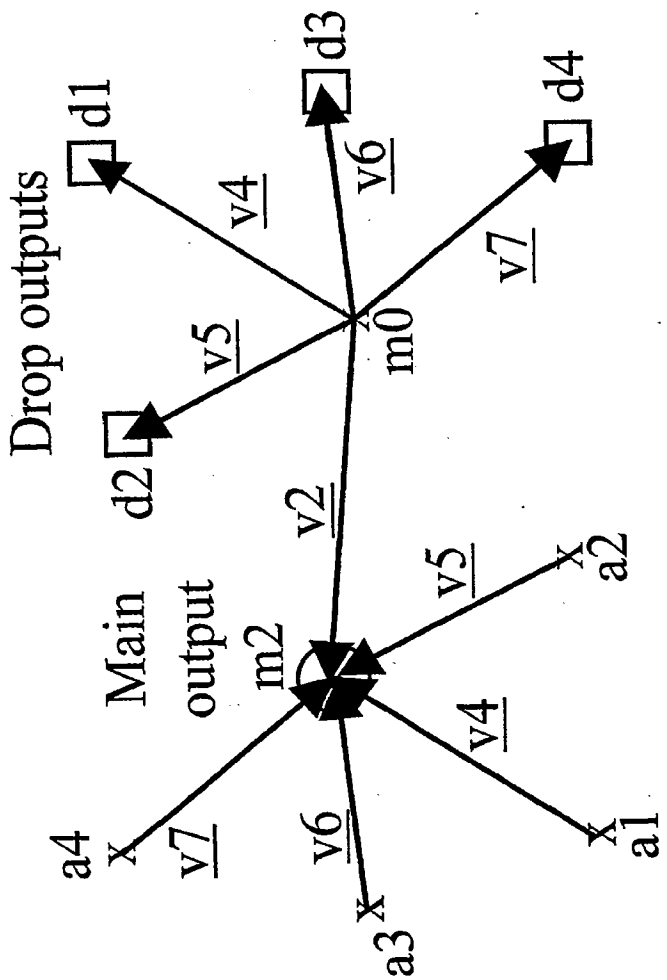
Drop outputs
d1
d2
d3
d4
v4
v5
v6
v7
m0
Main output
m2
v2
a1
a2
a3
a4
v4
v5
v6
v7

Figure 18

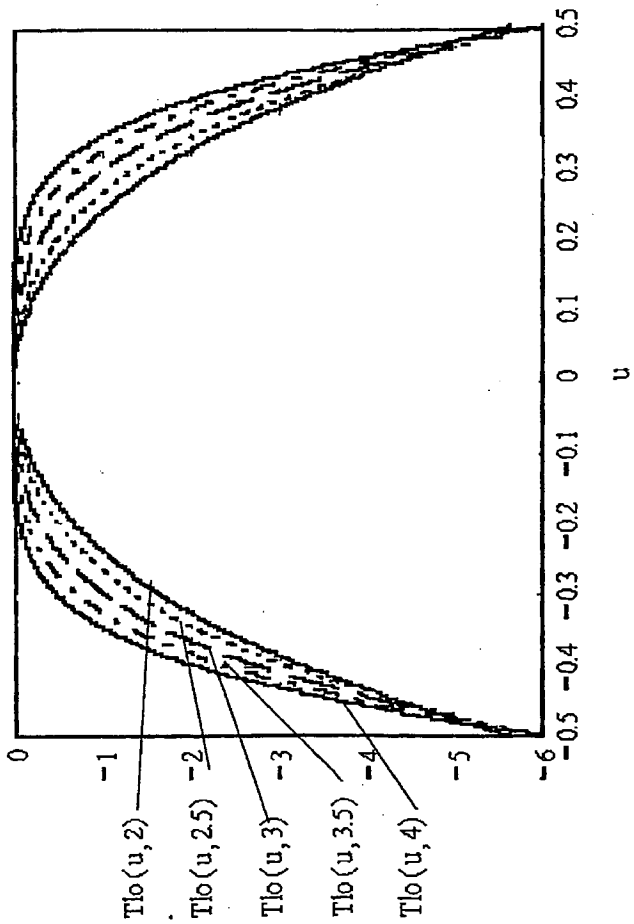
0.5
0.4
0.3
0.2
0.1
0
-0.1
-0.2
-0.3
-0.4
-0.5
u
0
-1
-2
-3
-4
-5
-6
Tlo(u,2)
Tlo(u,2.5)
Tlo(u,3)
Tlo(u,3.5)
Tlo(u,4)

Figure 19

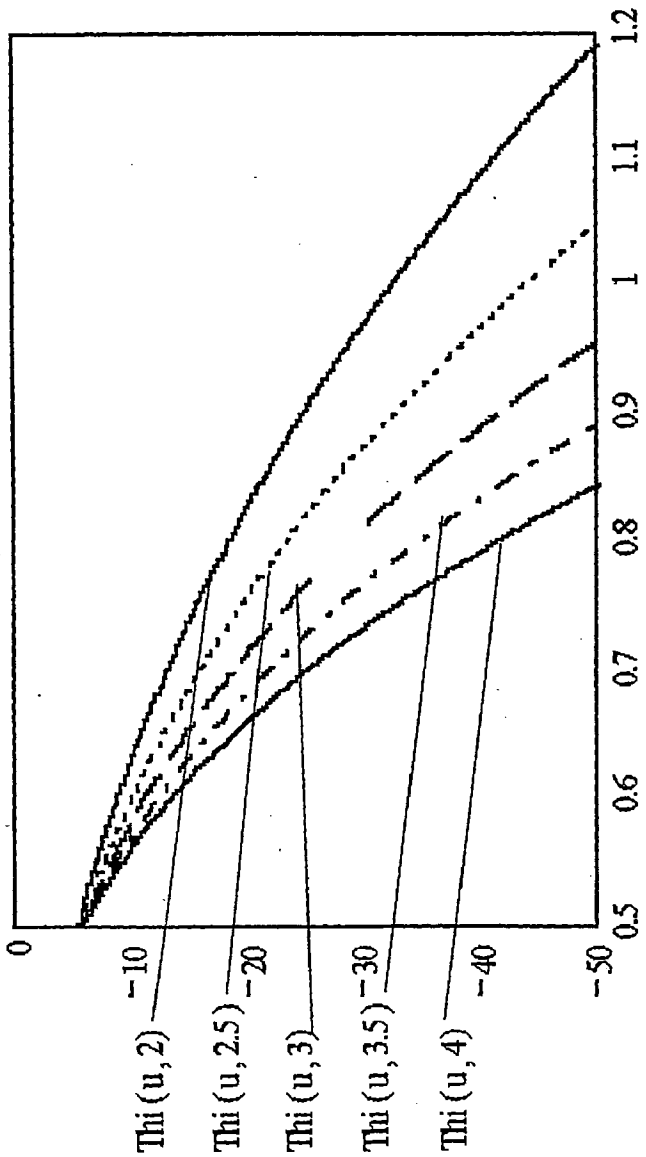
0
-10
-20
-30
-40
-50
0.5
0.6
0.7
0.8
0.9
1
1.1
1.2
u
Thi (u, 2)
Thi (u, 2.5)
Thi (u, 3)
Thi (u, 3.5)
Thi (u, 4)

Figure 20

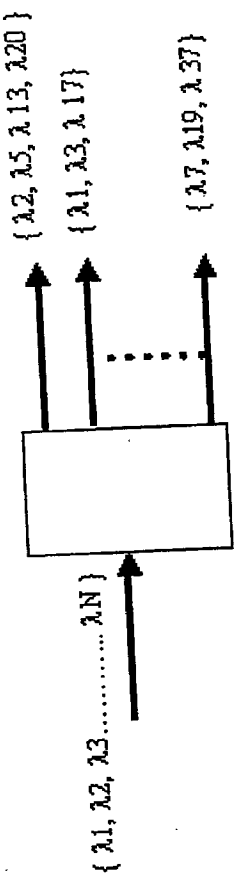

Figure 21

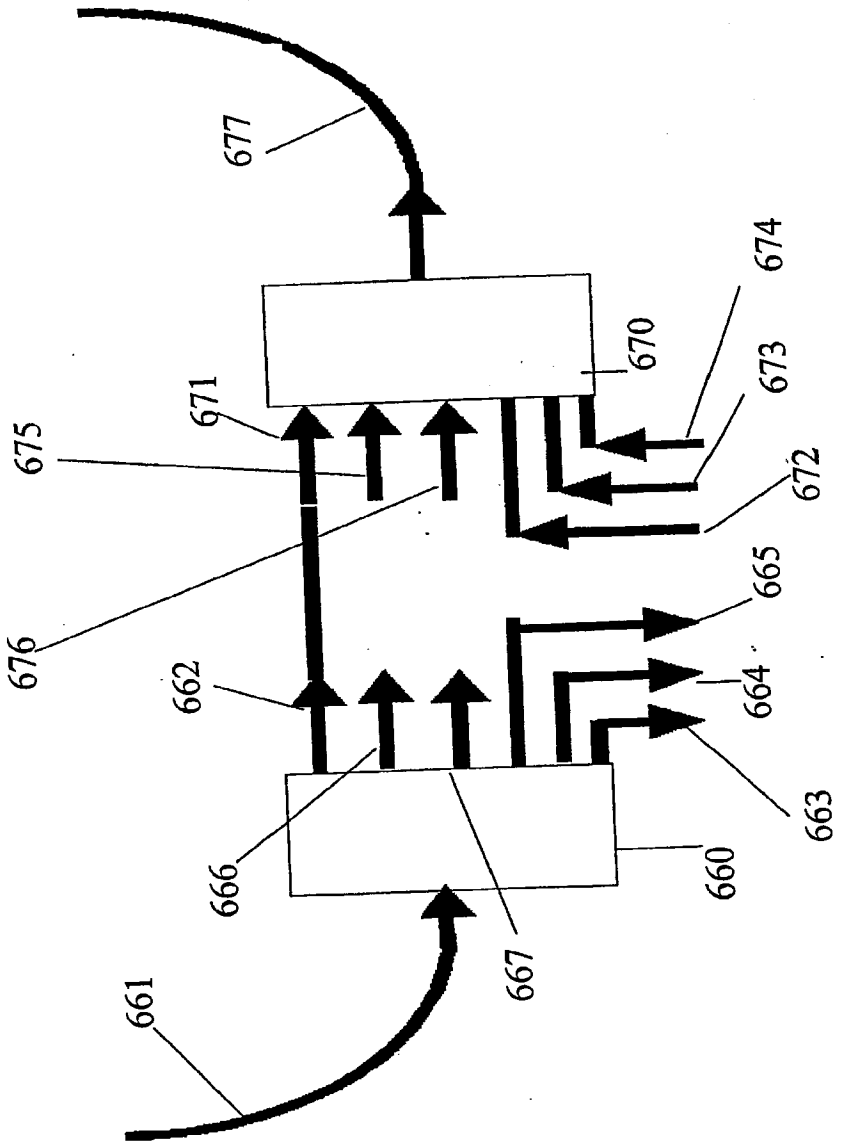

Figure 22

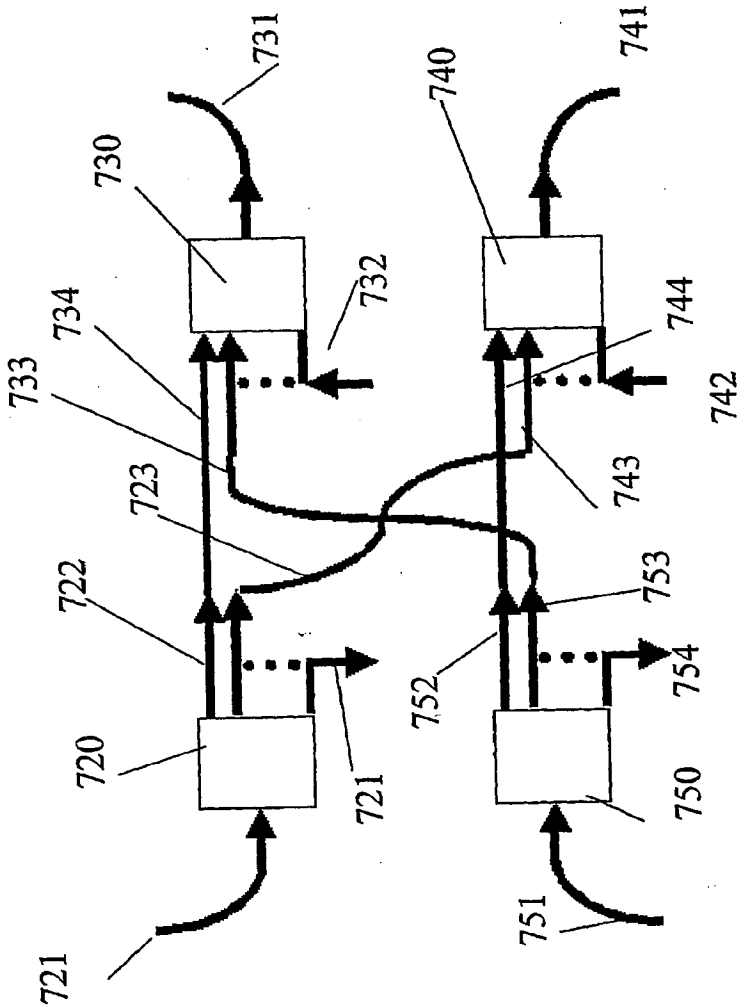
731
730
732
734
733
723
722
720
721
721
740
741
744
742
743
753
752
754
750
751

Figure 23

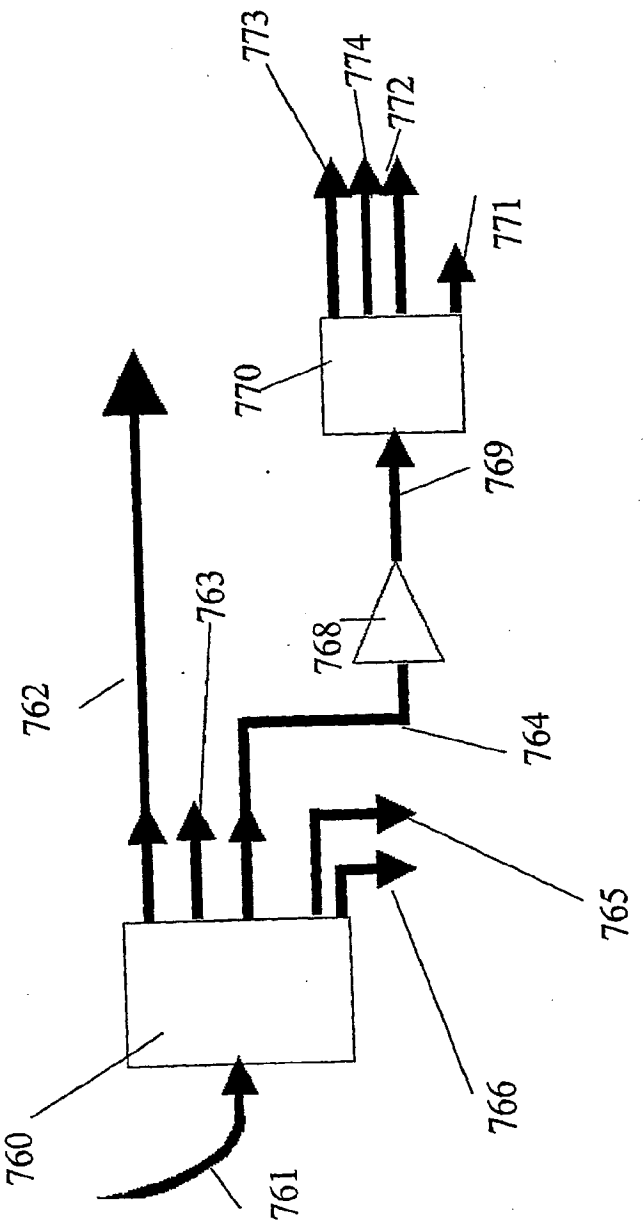

Figure 24

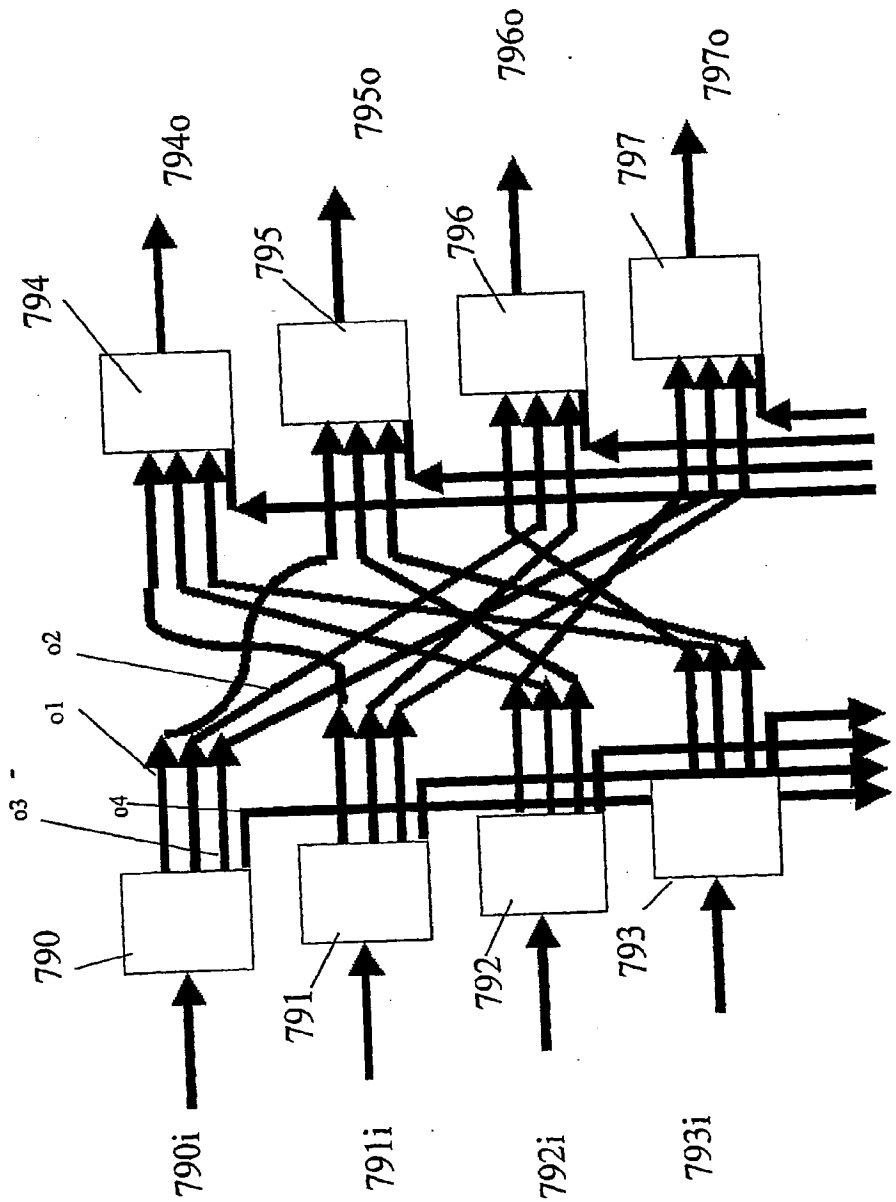
7940
7950
7960
7970
794
795
796
797
o2
o1
o3
o4
790
791
792
793
790i
791i
792i
793i

Figure 25

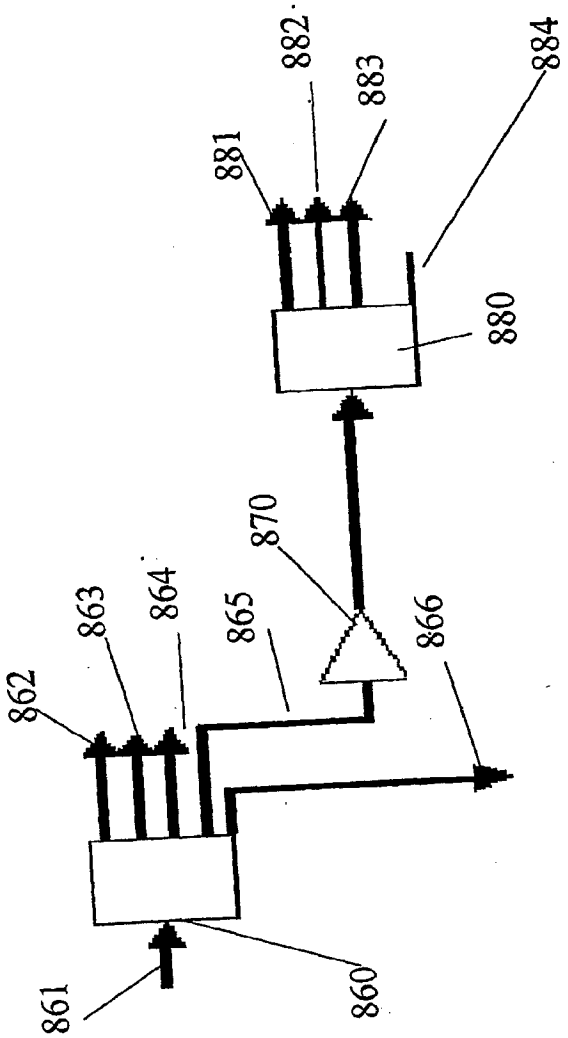

Figure 26

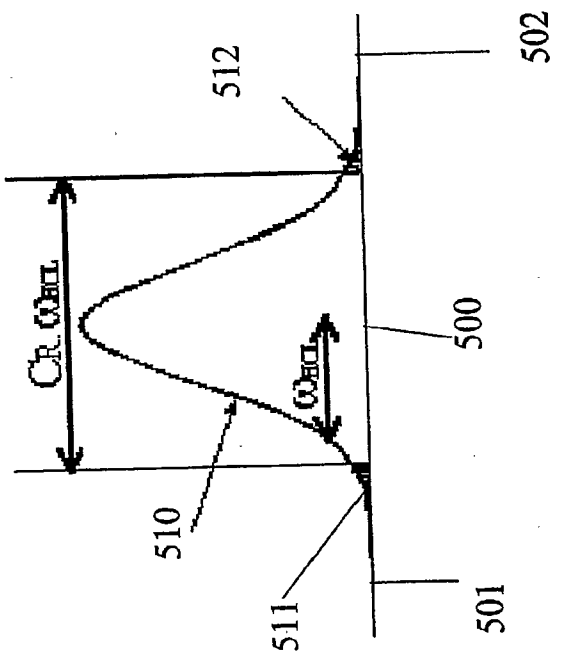

Figure 27

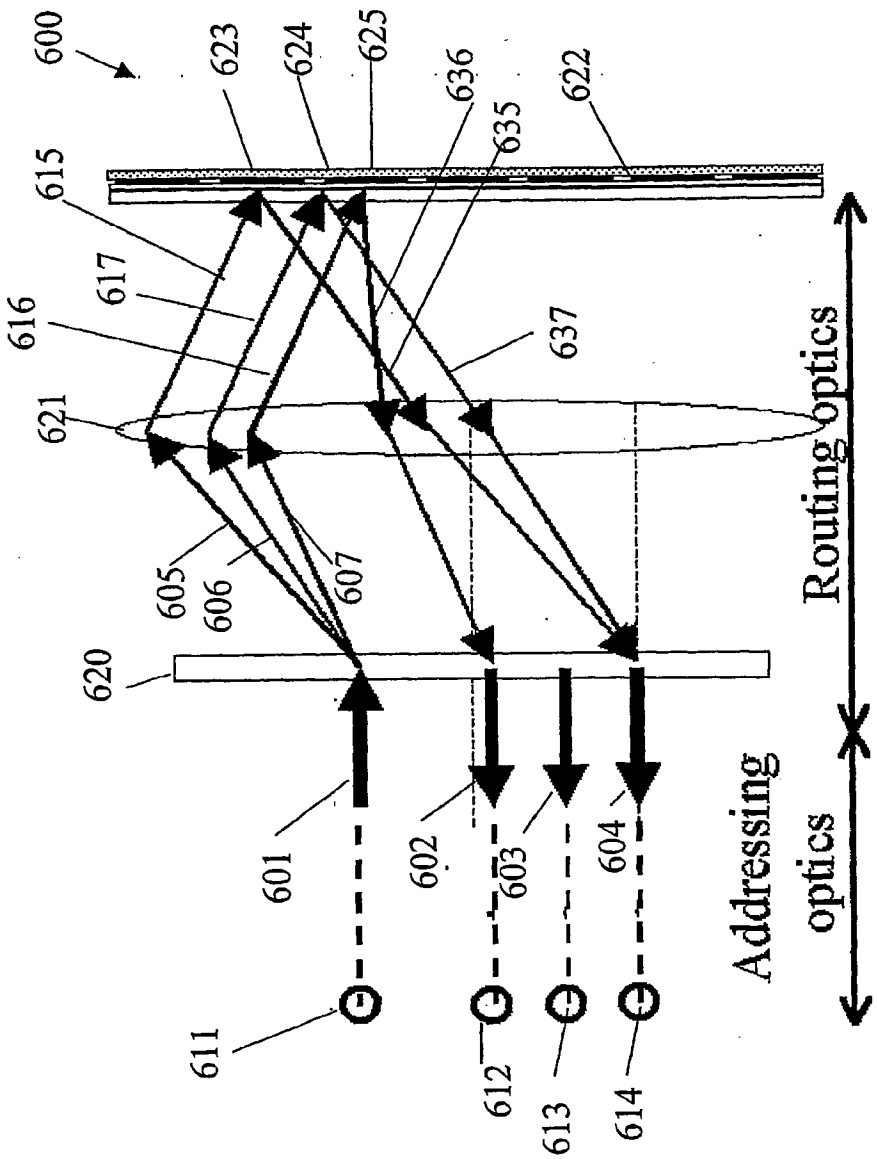
600
623
624
625
636
635
622
615
617
616
637
621
605
606
607
620
601
602
603
604
611
612
613
614
Addressing optics
Routing optics

Figure 28

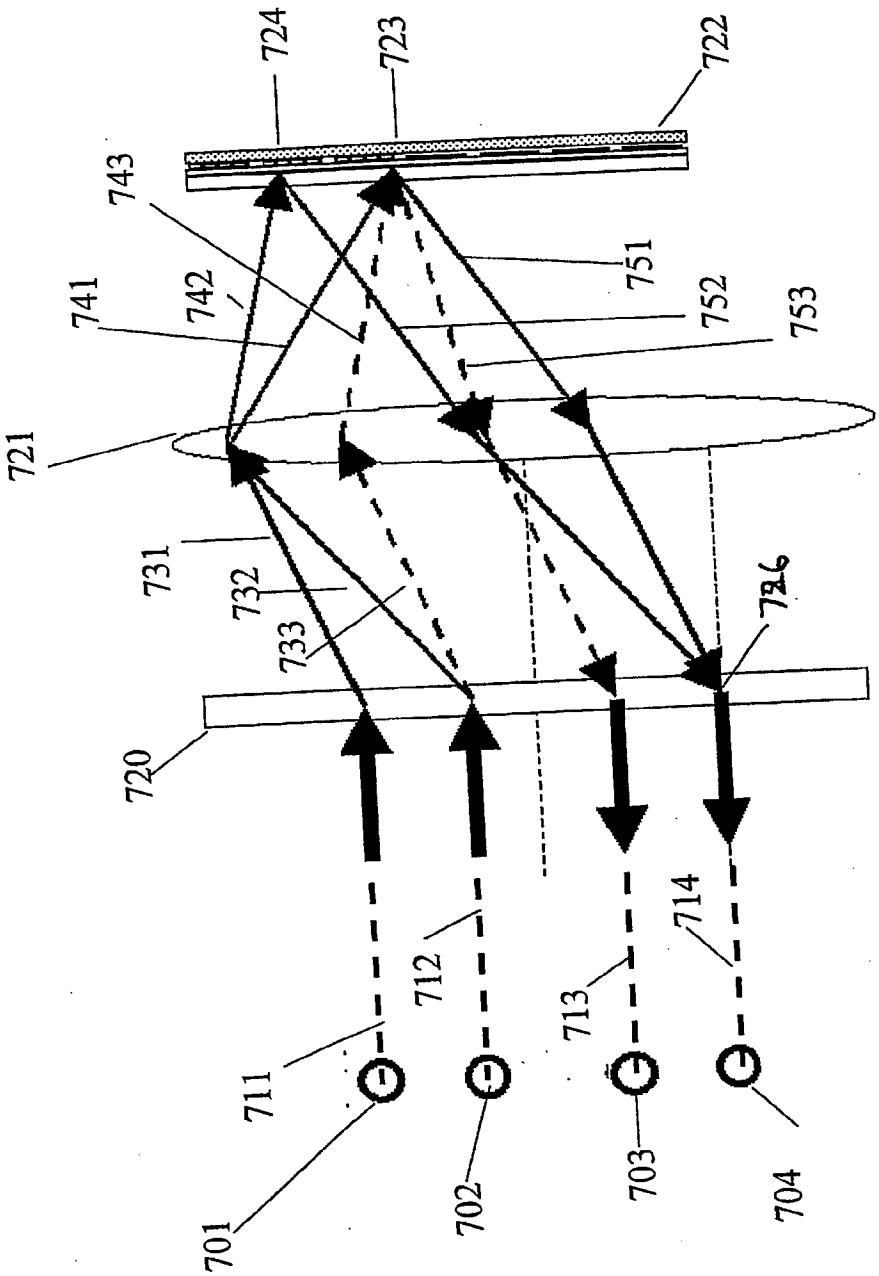
724
723
722
743
741
742
751
752
753
721
731
732
733
726
720
711
712
713
714
701
702
703
704

Figure 29

10/487810

WO 03/021341 PCT/GB02/04011

31/36

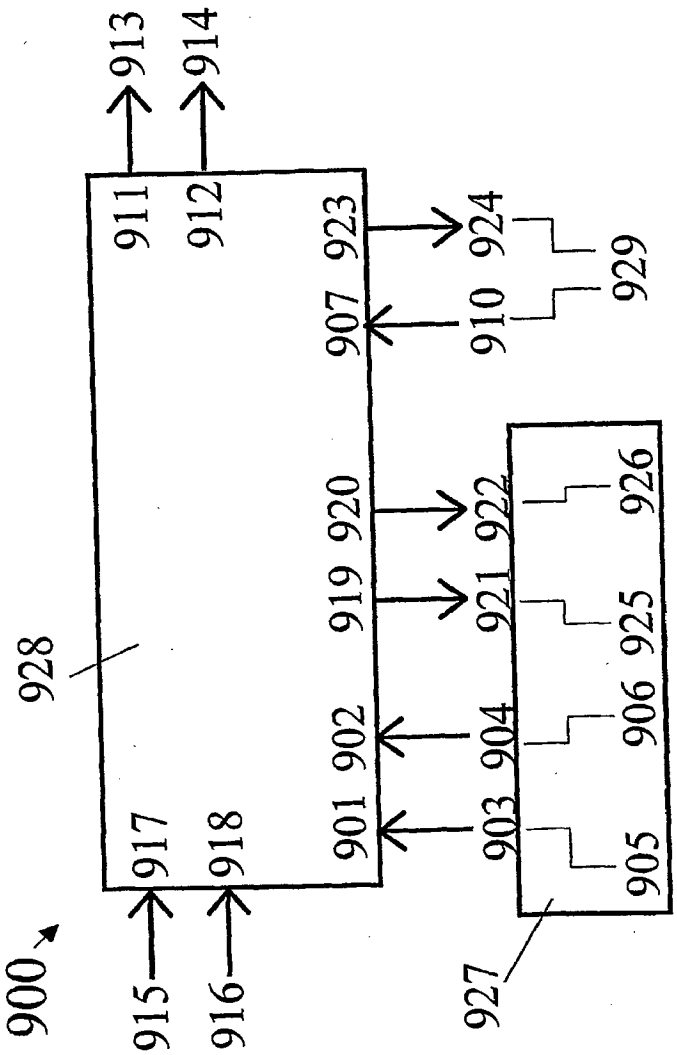

Figure 30

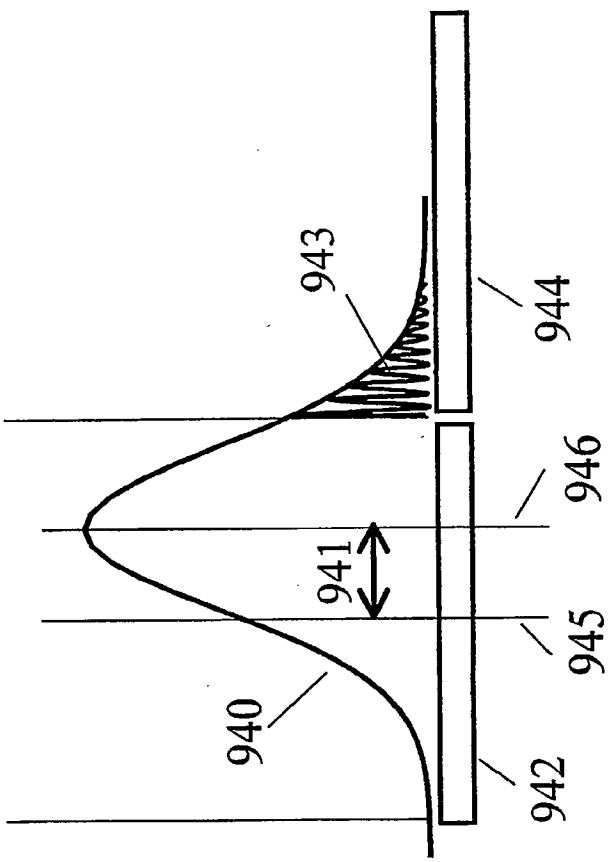

Figure 31

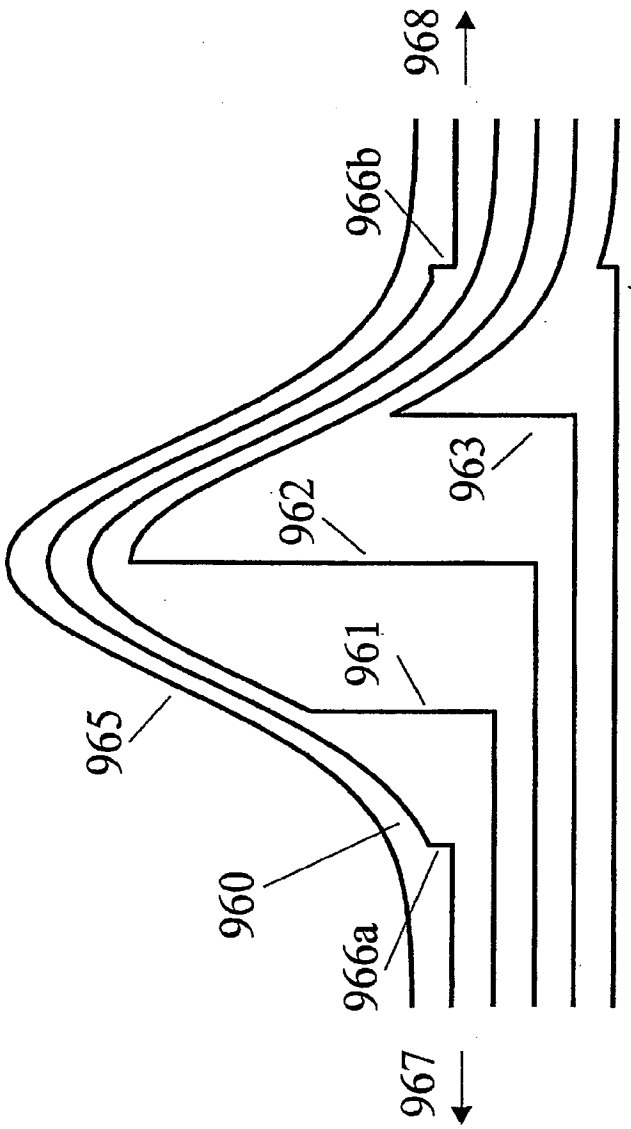

Figure 32

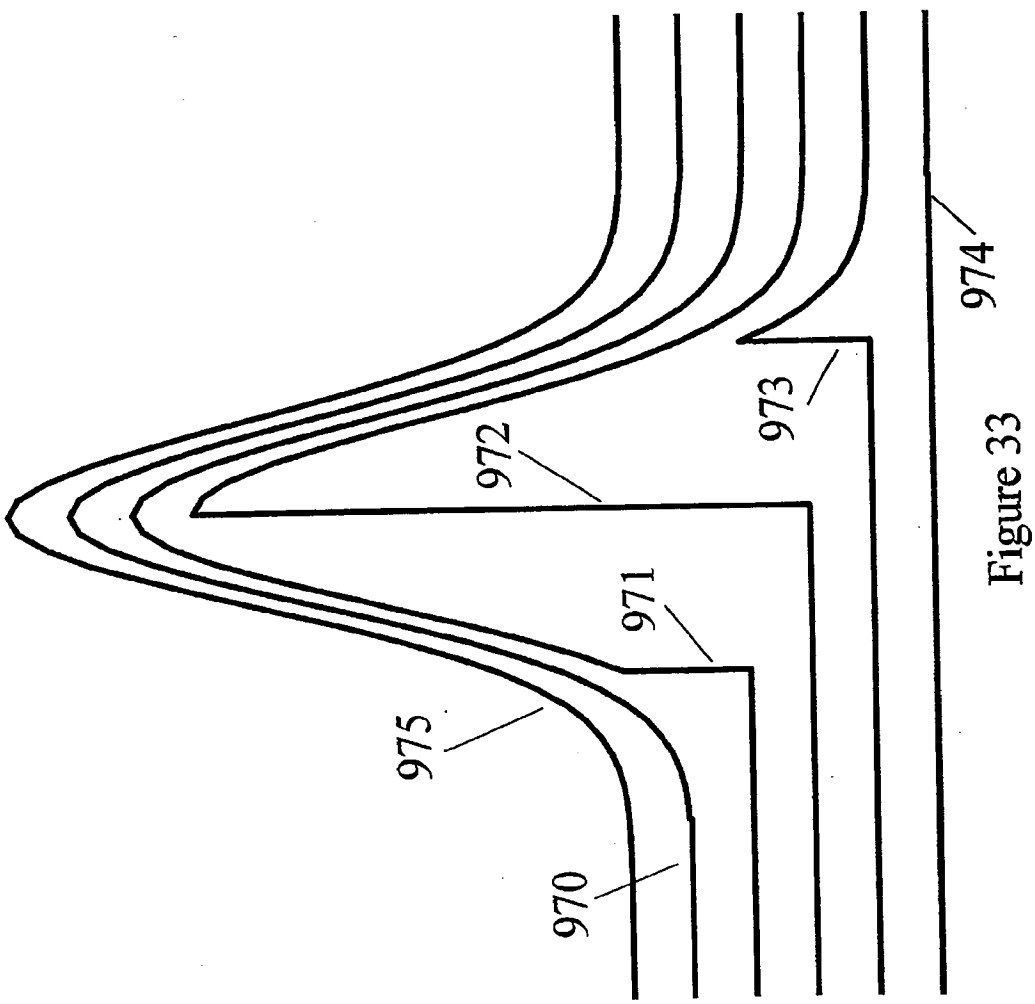

Figure 33

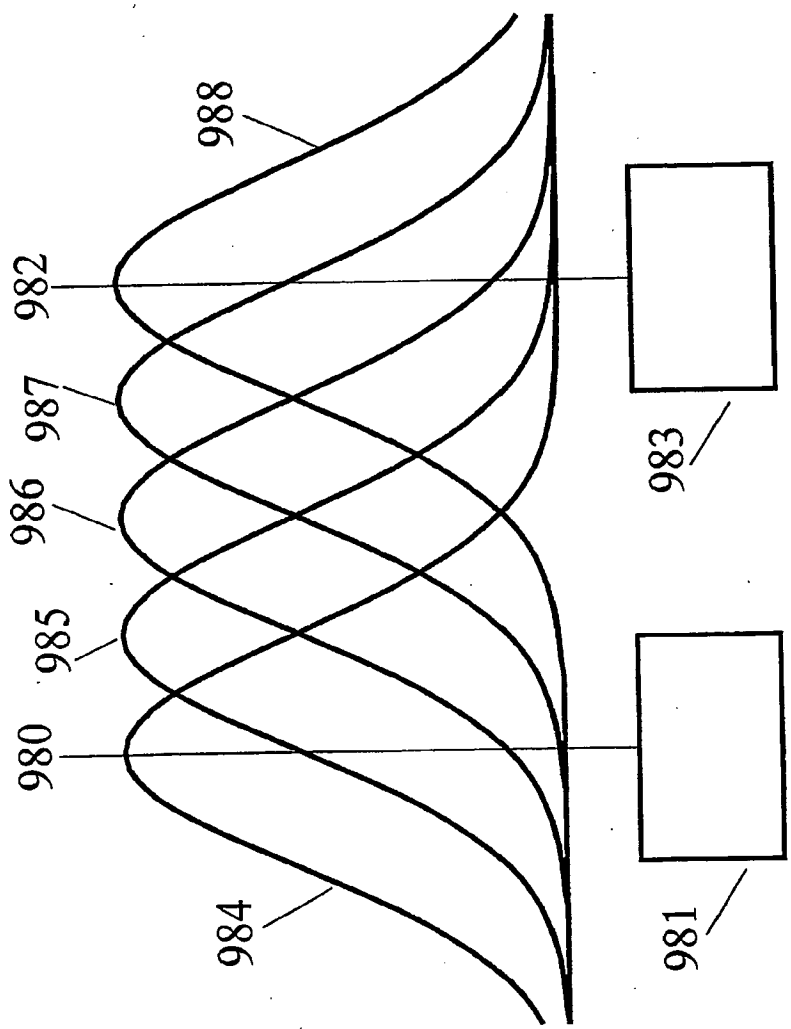

Figure 34

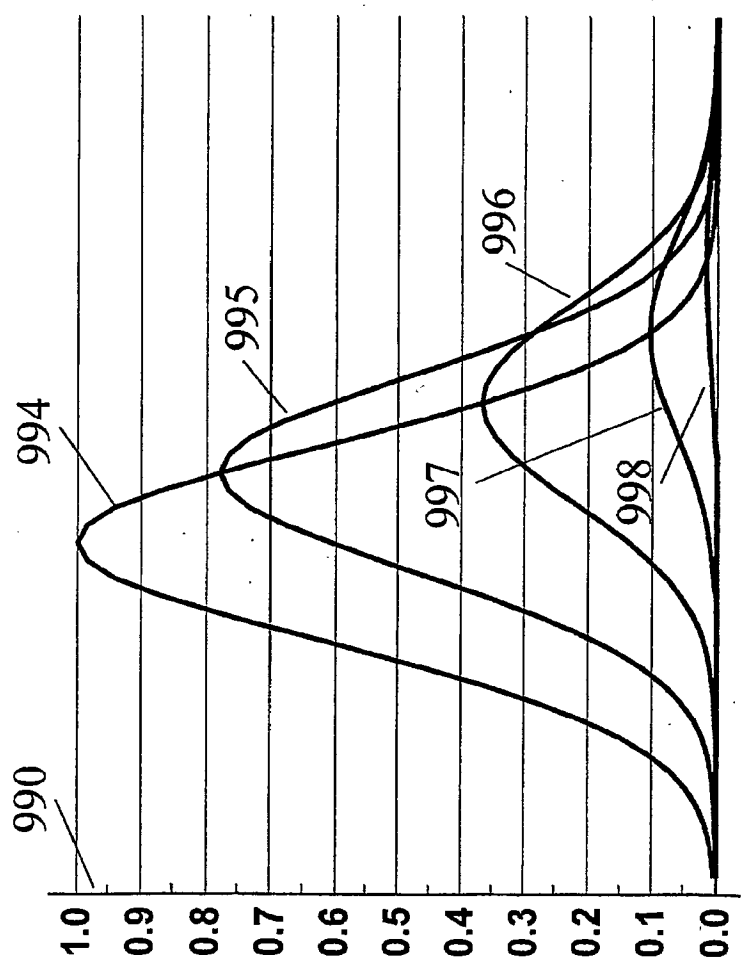

Figure 35

Rec'd PCT/PTO 26 FEB 2004

(12) INTERNATIONAL APPLICATION PUBLISHED UNDER THE PATENT COOPERATION TREATY (PCT)

(19) World Intellectual Property Organization
International Bureau

(43) International Publication Date
13 March 2003 (13.03.2003)

PCT

(10) International Publication Number
WO 03/021341 A2

(51) International Patent Classification[7]: G02F 1/00

(21) International Application Number: PCT/GB02/04011

(22) International Filing Date:
2 September 2002 (02.09.2002)

(25) Filing Language: English

(26) Publication Language: English

(30) Priority Data:
0121308.1 3 September 2001 (03.09.2001) GB

(71) Applicant *(for all designated States except US)*: **THOMAS SWAN & CO. LTD.** [GB/GB]; Crookhall, Consett, Co. Durham DH8 7ND (GB).

(72) Inventor; and

(75) Inventor/Applicant *(for US only)*: **HOLMES, Melanie** [GB/GB]; 39 Orford Street, Ipswich IP1 3PE (GB).

(74) Agent: **NEOBARD, William, J.**; W.H. Beck, Greener & Co., 7 Stone Buildings, Lincoln's Inn, London WC2A 3SZ (GB).

(81) Designated States *(national)*: AE, AG, AL, AM, AT, AU, AZ, BA, BB, BG, BR, BY, BZ, CA, CH, CN, CO, CR, CU, CZ, DE, DK, DM, DZ, EC, EE, ES, FI, GB, GD, GE, GH, GM, HR, HU, ID, IL, IN, IS, JP, KE, KG, KP, KR, KZ, LC, LK, LR, LS, LT, LU, LV, MA, MD, MG, MK, MN, MW, MX, MZ, NO, NZ, OM, PH, PL, PT, RO, RU, SD, SE, SG, SI, SK, SL, TJ, TM, TN, TR, TT, TZ, UA, UG, US, UZ, VC, VN, YU, ZA, ZM, ZW.

(84) Designated States *(regional)*: ARIPO patent (GH, GM, KE, LS, MW, MZ, SD, SL, SZ, TZ, UG, ZM, ZW), Eurasian patent (AM, AZ, BY, KG, KZ, MD, RU, TJ, TM), European patent (AT, BE, BG, CH, CY, CZ, DE, DK, EE, ES, FI, FR, GB, GR, IE, IT, LU, MC, NL, PT, SE, SK, TR), OAPI patent (BF, BJ, CF, CG, CI, CM, GA, GN, GQ, GW, ML, MR, NE, SN, TD, TG).

[Continued on next page]

(54) Title: OPTICAL PROCESSING

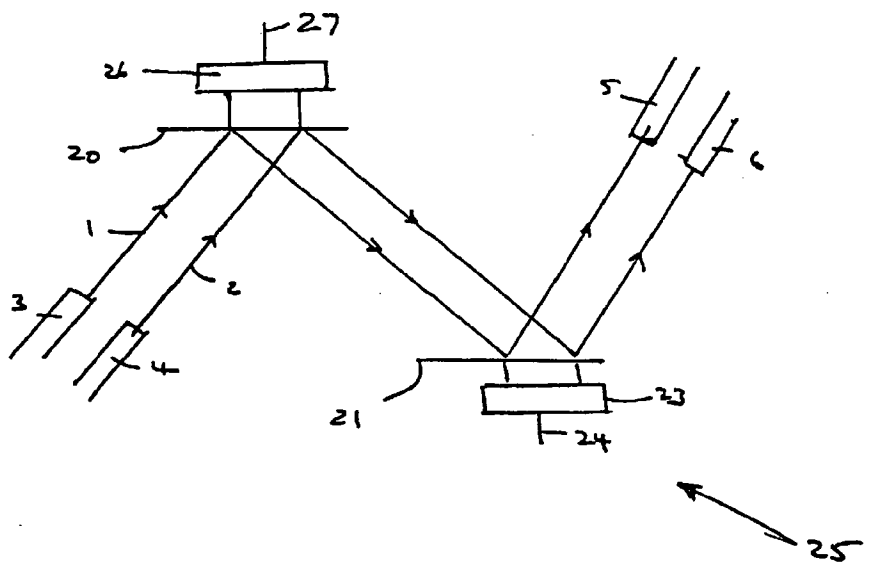

(57) Abstract: To operate an optical device comprising an SLM with a two-dimensional array of controllable phase-modulating elements groups of individual phase-modulating elements are delineated, and control data selected from a store for each delineated group of phase-modulating elements. The selected control data are used to generate holograms at each group and one or both of the delineation of the groups and the selection of control data is/are varied. In this way upon illumination of the groups by light beams, light beams emergent from the groups are controllable independently of each other.

WO 03/021341 A2

CLAIMS

1. A method of operating an optical device comprising an SLM having a two-dimensional array of controllable phase-modulating elements, the method comprising

delineating groups of individual phase-modulating elements;

selecting, from stored control data, control data for each group of phase-modulating elements;

generating from the respective selected control data a respective hologram at each group of phase-modulating elements; and

varying the delineation of the groups and /or the selection of control data

whereby upon illumination of said groups by respective light beams, respective emergent light beams from the groups are controllable independently of each other.

2. A method of operating an optical device according to claim 1, wherein control of said light beams is selected from the group comprising: control of direction, control of power, focussing, aberration compensation, sampling and beam shaping.

3. A method of operating an optical device according to claim 1 or 2, wherein each phase modulating element is responsive to a respective applied voltage to provide a corresponding phase shift to emergent light, the method further comprising

controlling said phase-modulating elements of the spatial light modulator to provide respective actual

holograms derived from the respective generated holograms, wherein the controlling step comprises:

resolving the respective generated holograms modulo 2pi.

4. A method of operating an optical device according to claim 1, 2 or 3, comprising:

providing a discrete number of voltages available for application to each phase modulating element;

on the basis of the respective generated holograms, determining the desired level of phase modulation at a predetermined point on each phase modulating element and choosing for each phase modulating element the available voltage which corresponds most closely to the desired level.

5. A method of operating an optical device according to claim 1,2 or 3, comprising:

providing a discrete number of voltages available for application to each phase modulating element;

determining a subset of the available voltages which provides the best fit to the generated hologram

6. A method of operating an optical device according to any preceding claim, further comprising the step of storing said control data wherein the step of storing said control data comprises calculating an initial hologram using a desired direction change of a beam of light, applying said initial hologram to a group of phase modulating elements, and correcting the initial hologram to obtain an improved result.

7. A method of operating an optical device according to any preceding claim, further comprising the step of providing sensors for detecting temperature change, and performing said varying step in response to the outputs of those sensors.

8. A method of operating an optical device according to any preceding claim, in which the SLM is integrated on a substrate and has an integrated quarter-wave plate whereby it is substantially polarisation insensitive.

9. A method of operating an optical device according to any preceding claim, wherein the phase-modulating elements are substantially reflective, whereby emergent beams are deflected from the specular reflection direction.

10. A method of operating an optical device according to Claim 3 or any claim dependent on claim 3 comprising, for at least one said group of phase-modulating elements, providing control data indicative of two holograms to be displayed by said group and generating a combined hologram before said resolving step.

11. An optical device comprising an SLM and a control circuit, the SLM having a two-dimensional array of controllable phase-modulating elements and the control circuit having a store constructed and arranged to hold plural items of control data, the control circuit being constructed and arranged to delineate groups of individual phase-modulating elements, to select, from stored control data, control data for each group of phase-modulating elements, and to generate from the respective selected

control data a respective hologram at each group of phase-modulating elements,

wherein the control circuit is further constructed and arranged to vary the delineation of the groups and /or the selection of control data,

whereby upon illumination of said groups by respective light beams, respective emergent light beams from the groups are controllable independently of each other.

12. An optical device according to claim 11, having sensor devices arranged to detect light emergent from the SLM, the control circuit being responsive to signals from the sensors to vary said delineation and/ or said selection.

13. An optical device according to claim 11 or 12, having temperature responsive devices constructed and arranged to feed signals indicative of device temperature to said control circuit, whereby said delineation and/ or selection is varied.

14. An optical routing device having at least first and second SLMs and a control circuit, the first SLM being disposed to receive respective light beams from an input fibre array, and the second SLM being disposed to receive emergent light from the first SLM and to provide light to an output fibre array, the first and second SLMs each having a respective two-dimensional array of controllable phase-modulating elements and the control circuit having a store constructed and arranged to hold plural items of control data, the control circuit being constructed and arranged to delineate groups of individual phase-modulating

elements, to select, from stored control data, control data for each group of phase-modulating elements, and to generate from the respective selected control data a respective hologram at each group of phase-modulating elements,

wherein the control circuit is further constructed and arranged, to vary the delineation of the groups and /or the selection of control data

whereby upon illumination of said groups by respective light beams, respective emergent light beams from the groups are controllable independently of each other.

15. A device for shaping one or more light beams in which the or each light beam is incident upon a respective group of pixels of a two-dimensional SLM, and the pixels of the or each respective group are controlled so that the corresponding beams emerging from the SLM are shaped as required.

16. An optical device comprising one or more optical inputs at respective locations, a diffraction grating constructed and arranged to receive light from the or each optical input, a focussing device and a continuous array of phase modulating elements, the diffraction grating and the array of phase modulating elements being disposed in the focal plane of the focussing device whereby diverging light from a single point on the diffraction grating passes via the focussing device to form beams at the array of phase modulating elements, the device further comprising one or more optical output at respective locations spatially separate location from the or each optical input, whereby

the diffraction grating is constructed and arranged to output light to the or each optical output.

17. A method of filtering light comprising applying a beam of said light to a diffraction grating whereby emerging light from the grating is angularly dispersed by wavelength, forming respective parallel beams from said emerging light by passing the emerging light to a focussing device having the grating at its focal plane, passing the respective parallel beams to an SLM at the focal plane of the focussing device, the SLM having a two-dimensional array of controllable phase-modulating elements, selectively reflecting light from different locations of said SLM and passing said reflected light to said focussing device and then to said grating.

18. A method according to claim 17 comprising delineating groups of individual phase-modulating elements to receive beams of light of differing wavelength;

selecting, from stored control data, control data for each group of phase-modulating elements;

generating from the respective selected control data a respective hologram at each group of phase-modulating elements; and

varying the delineation of the groups and /or the selection of control data.

19. An optical add/drop multiplexer having a reflective SLM having a two-dimensional array of controllable phase-modulating elements, a diffraction device and a focussing device wherein light beams from a common point on the diffraction device are mutually

parallel when incident upon the SLM, and wherein the SLM displays respective holograms at locations of incidence of light to provide emergent beams whose direction deviates from the direction of specular reflection.

20. A test or monitoring device comprising an SLM having a two-dimensional array of pixels, and operable to cause incident light to emerge in a direction deviating from the specular direction, the device having light sensors at predetermined locations arranged to provide signals indicative of said emerging light.

21. A test or monitoring device according to claim 20, further comprising further sensors arranged to provide signals indicative of light emerging in the specular directions.

22. A power control device for one or more beams of light in which the or each beam is incident on respective groups of pixels of a two-dimensional SLM, and power-control holograms are applied to the respective groups so that the emergent beams have power reduced by comparison to the respective incident beams.

23. An optical routing module having at least one input and at least two outputs and operable to select between the outputs, the module comprising a two dimensional SLM having an array of pixels, with circuitry constructed and arranged to display holograms on the pixels to route beams of different frequency to respective outputs.

24. A routing device having an input and plural outputs, the input constructed and arranged to receive a light beam having plural wavelengths, the device comprising an optical device for selecting the wavelengths of the input beam to appear in the outputs, wherein each output may contain any desired set of the plural wavelengths.

25. A routing device according to claim 24, wherein the members of the desired set may be varied in use.

26. A routing device according to claim 24 or 25, wherein at least two of the outputs contain at least one common wavelength.

27. A routing device having plural input signals and an output, the output constructed and arranged to deliver a signal having plural wavelengths, the device comprising a device for combining the wavelengths from the input signals to appear in the output, wherein each input signal may contain any desired set of the plural wavelengths of the output.

28. A method of filtering light comprising spatially distributing the light by wavelength across an array of phase-modulating elements to form plural beams, delineating a group of said phase-modulating elements to be aligned with the centre frequency of a desired channel whereby the group truncates the beams according to wavelength, controlling the group to provide images of the truncated light beams incident on the group at a selected output waveguide wherein the original centres of the truncated

light beams are substantially coincident with the centre of the output waveguide.

PT20 Rec'd PCT/PTO 26 FEB 2004

TRANSMITTAL LETTER TO THE UNITED STATES DESIGNATED/ELECTED OFFICE (DO/EO/US) CONCERNING A FILING UNDER 35 U.S.C. 371	ATTORNEY 'S DOCKET NUMBER 3274.1003-000
	U.S. APPLICATION NO. (If known, see 37 CFR 1.5) 10/487810

INTERNATIONAL APPLICATION NO.	INTERNATIONAL FILING DATE	PRIORITY DATE CLAIMED
PCT/GB02/04011	02 September 2002 (02.09.02)	03 September 2001 (03.09.01)

TITLE OF INVENTION
OPTICAL PROCESSING

APPLICANT(S) FOR DO/EO/US
Melanie Holmes

Applicant herewith submits to the United States Designated/Elected Office (DO/EO/US) the following items and other information:

1. [X] This is a **FIRST** submission of items concerning a filing under 35 U.S.C. 371.
2. [ ] This is a **SECOND** or **SUBSEQUENT** submission of items concerning a filing under 35 U.S.C. 371.
3. [ ] This is an express request to begin national examination procedures (35 U.S.C. 371(f)). The submission must include items (5), (6), (9) and (21) indicated below.
4. [X] The US has been elected (Article 31).
5. [X] A copy of the International Application as filed (35 U.S.C. 371(c)(2))
   a. [X] is attached hereto (required only if not communicated by the International Bureau).
   b. [ ] has been communicated by the International Bureau.
   c. [ ] is not required, as the application was filed in the United States Receiving Office (RO/US).
6. [ ] An English language translation of the International Application as filed (35 U.S.C. 371(c)(2)).
   a. [ ] is attached hereto.
   b. [ ] has been previously submitted under 35 U.S.C. 154(d)(4).
7. [X] Amendments to the claims of the International Application under PCT Article 19 (35 U.S.C. 371(c)(3))
   a. [ ] are attached hereto (required only if not communicated by the International Bureau).
   b. [ ] have been communicated by the International Bureau.
   c. [ ] have not been made; however, the time limit for making such amendments has NOT expired.
   d. [X] have not been made and will not be made.
8. [ ] An English language translation of the amendments to the claims under PCT Article 19 (35 U.S.C. 371 (c)(3)).
9. [ ] An oath or declaration of the inventor(s) (35 U.S.C. 371(c)(4)).
10. [ ] An English language translation of the annexes of the International Preliminary Examination Report under PCT Article 36 (35 U.S.C. 371(c)(5)).

Items 11 to 20 below concern document(s) or information included:

11. [X] An Information Disclosure Statement under 37 CFR 1.97 and 1.98.
12. [ ] An assignment document for recording. A separate cover sheet in compliance with 37 CFR 3.28 and 3.31 is included.
13. [X] A preliminary amendment.
14. [ ] An Application Data Sheet under 37 CFR 1.76.
15. [ ] A substitute specification.
16. [ ] A power of attorney and/or change of address letter.
17. [ ] A computer-readable form of the sequence listing in accordance with PCT Rule 13*ter*.2 and 37 CFR 1.821 - 1.825.
18. [ ] A second copy of the published international application under 35 U.S.C. 154(d)(4).
19. [ ] A second copy of the English language translation of the international application under 35 U.S.C. 154(d)(4).
20. [X] Other items or information:
    Full copy of the International Search Report
    Postcard Receipt

@PFDesktop\::ODMA/MHODMA/HBSR05;iManage;456223;1

U.S. APPLICATION NO (if known, see 37 CFR 1.5)	INTERNATIONAL APPLICATION NO.	ATTORNEY'S DOCKET NUMBER
10487810	PCT/GB02/04011	3274.1003-000

21. [X] The following fees are submitted:		CALCULATIONS PTO USE ONLY	
BASIC NATIONAL FEE (37 CFR 1.492 (a) (1) - (5)):			
Neither international preliminary examination fee (37 CFR 1.482) nor international search fee (37 CFR 1.445(a)(2)) paid to USPTO and International Search Report not prepared by the EPO or JPO	**$1080.00**		
International preliminary examination fee (37 CFR 1.482) not paid to USPTO but International Search Report prepared by the EPO or JPO.	**$920.00**		
International preliminary examination fee (37 CFR 1.482) not paid to USPTO but international search fee (37 CFR 1.445(a)(2)) paid to USPTO.	**$770.00**		
International preliminary examination fee (37 CFR 1.482) paid to USPTO but all claims did not satisfy provisions of PCT Article 33(1)-(4).	**$730.00**		
International preliminary examination fee (37 CFR 1.482) paid to USPTO and all claims satisfied provisions of PCT Article 33(1)-(4).	**$100.00**		
ENTER APPROPRIATE BASIC FEE AMOUNT =		$920.00	
Surcharge of **$130.00** for furnishing the oath or declaration later than 30 months from the earliest claimed priority date (37 CFR 1.492(e)).		$	

CLAIMS	NUMBER FILED	NUMBER EXTRA	RATE	$	
Total claims	28 - 20 =	8	x **$18.00**	$144	
Independent claims	13 - 3 =	10	x **$86.00**	$860	
MULTIPLE DEPENDENT CLAIM(S) (if applicable)			+ **$290.00**	$	
TOTAL OF ABOVE CALCULATIONS =				$1,924	
[ ] Applicant claims small entity status. See 37 CFR 1.27. The fees indicated above are reduced by 1/2.				$	
SUBTOTAL =				$1924	
Processing fee of **$130.00** for furnishing the English translation later than 30 months from the earliest claimed priority date (37 CFR 1.492(f)).				$	
TOTAL NATIONAL FEE =				$1,924	
Fee for recording the enclosed assignment (37 CFR 1.21(h)). The assignment must be accompanied by an appropriate cover sheet (37 CFR 3.28, 3.31). **$40.00** per property +				$	
TOTAL FEES ENCLOSED =				$1,924	
				Amount to be refunded:	$
				charged:	$

a. [X] A check in the amount of $1,924.00 to cover the above fees is enclosed.

b. [ ] Please charge my Deposit Account No. in the amount of $[ ] to cover the above fees. A duplicate copy of this sheet is enclosed.

c. [X] The Commissioner is hereby authorized to charge any additional fees which may be required, or credit any overpayment to Deposit Account No. 08-0380. A duplicate copy of this sheet is enclosed.

NOTE: Where an appropriate time limit under 37 CFR 1.495 has not been met, a petition to revive (37 CFR 1.137 (a) or (b)) must be filed and granted to restore the application to pending status.

SEND ALL CORRESPONDENCE TO:

Customer No. 021005
HAMILTON, BROOK, SMITH & REYNOLDS, P.C.
530 Virginia Road
P.O. Box 9133
Concord, MA 01742-9133

SIGNATURE

Timothy J. Meagher
NAME

39,302
REGISTRATION NUMBER

@PFDesktop\::ODMA/MHODMA/HBSR05;iManage;456223;1

@PFDesktop\::ODMA/MHODMA/HBSR05;iManage;45

DT20 Rec'd PCT/PTO 26 FEB 2004

10/487810

IN THE UNITED STATES RECEIVING OFFICE (RO/US)
Designated/Elected Office (DO/EO/US)

U.S. National Stage of
International Application No.: PCT/GB02/04011

International Filing Date: 2 September 2002

Priority Date Claimed: 3 September 2001

Applicant: Melanie Holmes

Title: OPTICAL PROCESSING

Attorney's Docket No.: 3274.1003-000

Date: 26 February 2004

EXPRESS MAIL LABEL NO. EV 214917708 US

10/487810
DT12 Rec'd PCT/PTO 26 FEB 2004

OPTICAL PROCESSING

Field of the invention

The present invention relates to an optical device and to a method of controlling an optical device.

More particularly but not exclusively the invention relates to the general field of controlling one or more light beams by the use of electronically controlled devices. The field of application is mainly envisaged as being to fields in which reconfiguration between inputs and outputs is likely, and stability of performance is a significant requirement.

Background of the invention

It has previously been proposed to use so-called spatial light modulators to control the routing of light beams within an optical system, for instance from selected ones of a number of input optical fibres to selected ones of output fibres.

Optical systems are subject to performance impairments resulting from aberrations, phase distortions and component misalignment. An example is a multiway fibre connector, which although conceptually simple can often be a critical source of system failure or insertion loss due to the very tight alignment tolerances for optical fibres, especially for single-mode optical fibres. Every time a fibre connector is connected, it may provide a different alignment error. Another example is an optical switch in

which aberrations, phase distortions and component misalignments result in poor optical coupling efficiency into the intended output optical fibres. This in turn may lead to high insertion loss. The aberrated propagating waves may diffract into intensity fluctuations creating significant unwanted coupling of light into other output optical fibres, leading to levels of crosstalk that impede operation. In some cases, particularly where long path lengths are involved, the component misalignment may occur due to ageing or temperature effects.

Some prior systems seek to meet such problems by use of expensive components. For example in a communications context, known free-space wavelength multiplexers and demultiplexers use expensive thermally stable opto-mechanics to cope with the problems associated with long path lengths.

Certain optical systems have a requirement for reconfigurability. Such reconfigurable systems include optical switches, add/drop multiplexers and other optical routing systems where the mapping of signals from input ports to output ports is dynamic. In such systems the path-dependent losses, aberrations and phase distortions encountered by optical beams may vary from beam to beam according to the route taken by the beam through the system. Therefore the path-dependent loss, aberrations and phase distortions may vary for each input beam or as a function of the required output port.

The prior art does not adequately address this situation.

Other optical systems are static in terms of input/output configuration. In such systems, effects such as assembly errors, manufacturing tolerances in the optics and also changes in the system behaviour due to temperature and ageing, create the desirability for dynamic direction control, aberration correction, phase distortion compensation or misalignment compensation.

It should be noted that the features of dynamic direction control, phase distortion compensation and misalignment control are not restricted to systems using input beams coming from optical fibres. Such features may also be advantageous in a reconfigurable optical system. Another static system in which dynamic control of phase distortion, direction and (relative) misalignment would be advantageous is one in which the quality and/or position of the input beams is time-varying.

Often the input and output beams for optical systems contain a multiplex of many optical signals at different wavelengths, and these signals may need to be separated and adaptively and individually processed inside the system. Sometimes, although the net aim of a system is not to separate optical signals according to their wavelength and then treat them separately, to do so increases the wavelength range of the system as a whole. Where this separation is effected, it is often advantageous for the device used to route each channel to have a low insertion loss and to operate quickly.

It is an aim of some aspects of the present invention at least partly to mitigate difficulties of the prior art.

It is desirable for certain applications that a method or device for addressing these issues should be polarisation-independent, or have low polarisation-dependence.

SLMs have been proposed for use as adaptive optical components in the field of astronomical devices, for example as wavefront correctors. In this field of activity, the constraints are different to the present field - for example in communication and like devices, the need for consistent performance is paramount if data is to be passed without errors. Communication and like devices are desirably inexpensive, and desirably inhabit and successfully operate in environments that are not closely controlled. By contrast, astronomical devices may be used in conditions more akin to laboratory conditions, and cost constraints are less pressing. Astronomical devices are unlikely to need to select successive routings of light within a system, and variations in performance may be acceptable.

Summary of the invention

According to a first aspect of the invention, there is provided a method of operating an optical device comprising an SLM having a two-dimensional array of controllable phase-modulating elements, the method comprising

delineating groups of individual phase-modulating elements;

selecting, from stored control data, control data for each group of phase-modulating elements;

generating from the respective selected control data a respective hologram at each group of phase-modulating elements; and

varying the delineation of the groups and /or the selection of control data whereby upon illumination of said groups by respective light beams, respective emergent light beams from the groups are controllable independently of each other.

In some embodiments, the variation of the delineation and /or control data selection is in response to a signal or signals indicating a non-optimal performance of the device. In other embodiments, the variation is performed during a set up or training phase of the device. In yet other embodiments, the variation is in response to an operating signal, for example a signal giving the result of sensing non-performance system parameters such as temperature.

An advantage of the method of this aspect of the invention is that stable operation can be achieved in the presence of effects such as ageing, temperature, component, change of path through the system and assembly tolerances.

Preferably, control of said light beams is selected from the group comprising: control of direction, control of power, focussing, aberration compensation, sampling and beam shaping.

Clearly in most situations more than one of these control types will be needed - for example in a routing device (such as a switch, filter or add/drop multiplexer) primary changes of direction are likely to be needed to cope with changes of routing as part of the main system but secondary correction will be needed to cope with effects such as temperature and ageing. Additionally such systems may also need to control power, and to allow sampling (both of which may in some cases be achieved by direction changes).

Advantageously, each phase modulating element is responsive to a respective applied voltage to provide a corresponding phase shift to emergent light, and the method further comprises;

controlling said phase-modulating elements of the spatial light modulator to provide respective actual holograms derived from the respective generated holograms, wherein the controlling step comprises;

resolving the respective generated holograms modulo 2pi.

The preferred SLM uses a liquid crystal material to provide phase shift and the liquid crystal material is not capable of large phase shifts beyond plus or minus 2 pi. Some liquid crystal materials can only provide a smaller range of phase shifts, and if such materials are used, the resolution of the generated hologram is correspondingly smaller.

Preferably the method comprises:

providing a discrete number of voltages available for application to each phase modulating element;

on the basis of the respective generated holograms, determining the desired level of phase modulation at a predetermined point on each phase modulating element and choosing for each phase modulating element the available voltage which corresponds most closely to the desired level.

Where a digital control device is used, the resolution of the digital signal does not provide a continuous spectrum of available voltages. One way of coping with this is to determine the desired modulation for each pixel and to choose the individual voltage which will provide the closest modulation to the desired level.

In another embodiment, the method comprises:

providing a discrete number of voltages available for application to each phase modulating element;

determining a subset of the available voltages which provides the best fit to the generated hologram.

Another technique is to look at the pixels of the group as a whole and to select from the available voltages those that give rise to the nearest phase modulation across the whole group.

Advantageously, the method further comprises the step of storing said control data wherein the step of storing said control data comprises calculating an initial hologram using a desired direction change of a beam of light, applying said initial hologram to a group of phase

modulating elements, and correcting the initial hologram to obtain an improved result.

The method may further comprise the step of providing sensors for detecting temperature change, and performing said varying step in response to the outputs of those sensors.

The SLM may be integrated on a substrate and have an integral quarter-wave plate whereby it is substantially polarisation insensitive.

Preferably the phase-modulating elements are substantially reflective, whereby emergent beams are deflected from the specular reflection direction.

In some aspects, for at least one said group of pixels, the method comprises providing control data indicative of two holograms to be displayed by said group and generating a combined hologram before said resolving step.

According to a second aspect of the invention there is provided an optical device comprising an SLM and a control circuit, the SLM having a two-dimensional array of controllable phase-modulating elements and the control circuit having a store constructed and arranged to hold plural items of control data, the control circuit being constructed and arranged to delineate groups of individual phase-modulating elements, to select, from stored control data, control data for each group of phase-modulating elements, and to generate from the respective selected

control data a respective hologram at each group of phase-modulating elements,

wherein the control circuit is further constructed and arranged, to vary the delineation of the groups and/or the selection of control data

whereby upon illumination of said groups by respective light beams, respective emergent light beams from the groups are controllable independently of each other.

An advantage of the device of this aspect of the invention is that stable operation can be achieved in the presence of effects such as ageing, temperature, component and assembly tolerances. Embodiments of the device can handle many light beams simultaneously. Embodiments can be wholly reconfigurable, for example compensating differently for a number of routing configurations.

Preferably, the optical device has sensor devices arranged to detect light emergent from the SLM, the control circuit being responsive to signals from the sensors to vary said delineation and/or said selection.

In some embodiments, the optical device has temperature responsive devices constructed and arranged to feed signals indicative of device temperature to said control circuit, whereby said delineation and/or selection is varied.

In another aspect, the invention provides an optical routing device having at least first and second SLMs and a control circuit, the first SLM being disposed to receive respective light beams from an input fibre array, and the

second SLM being disposed to receive emergent light from the first SLM and to provide light to an output fibre array, the first and second SLMs each having a respective two-dimensional array of controllable phase-modulating elements and the control circuit having a store constructed and arranged to hold plural items of control data, the control circuit being constructed and arranged to delineate groups of individual phase-modulating elements, to select, from stored control data, control data for each group of phase-modulating elements, and to generate from the respective selected control data a respective hologram at each group of phase-modulating elements,

wherein the control circuit is further constructed and arranged, to vary the delineation of the groups and /or the selection of control data

whereby upon illumination of said groups by respective light beams, respective emergent light beams from the groups are controllable independently of each other.

In a further aspect, the invention provides a device for shaping one or more light beams in which the or each light beam is incident upon a respective group of pixels of a two-dimensional SLM, and the pixels of the or each respective group are controlled so that the corresponding beams emerging from the SLM are shaped as required.

According to a further aspect of the invention there is provided an optical device comprising one or more optical inputs at respective locations, a diffraction grating constructed and arranged to receive light from the or each optical input, a focussing device and a continuous array of phase modulating elements, the diffraction grating

and the array of phase modulating elements being disposed in the focal plane of the focussing device whereby diverging light from a single point on the diffraction grating passes via the focussing device to form beams at the array of phase modulating elements, the device further comprising one or more optical output at respective locations spatially separate from the or each optical input, whereby the diffraction grating is constructed and arranged to output light to the or each optical output.

This device allows multiwavelength input light to be distributed in wavelength terms across different groups of phase-modulating elements. This allows different processing effects to be applied to any desired part or parts of the spectrum.

According to a still further aspect of the invention there is provided a method of filtering light comprising applying a beam of said light to a diffraction grating whereby emerging light from the grating is angularly dispersed by wavelength, forming respective beams from said emerging light by passing the emerging light to a focussing device having the grating at its focal plane, passing the respective beams to an SLM at the focal plane of the focussing device, the SLM having a two-dimensional array of controllable phase-modulating elements, selectively reflecting light from different locations of said SLM and passing said reflected light to said focussing element and then to said grating.

Preferably the method comprises delineating groups of individual phase-modulating elements to receive beams of light of differing wavelength;

selecting, from stored control data, control data for each group of phase-modulating elements;

generating from the respective selected control data a respective hologram at each group of phase-modulating elements; and

varying the delineation of the groups and /or the selection of control data.

According to a still further aspect of the invention there is provided an optical add/drop multiplexer having a reflective SLM having a two-dimensional array of controllable phase-modulating elements, a diffraction device and a focussing device wherein light beams from a common point on the diffraction device are mutually parallel when incident upon the SLM, and wherein the SLM displays respective holograms at locations of incidence of light to provide emergent beams whose direction deviates from the direction of specular reflection.

In a yet further aspect, the invention provides a test or monitoring device comprising an SLM having a two-dimensional array of pixels, and operable to cause incident light to emerge in a direction deviating from the specular direction, the device having light sensors at predetermined locations arranged to provide signals indicative of said emerging light.

The test or monitoring device may further comprise further sensors arranged to provide signals indicative of light emerging in the specular directions.

Yet a further aspect of the invention relates to a power control device for one or more beams of lights in which the said beams are incident on respective groups of pixels of a two-dimensional SLM, and holograms are applied to the respective group so that the emergent beams have power reduced by comparison to the respective incident beams.

The invention further relates to an optical routing module having at least one input and at least two outputs and operable to select between the outputs, the module comprising a two dimensional SLM having an array of pixels, with circuitry constructed and arranged to display holograms on the pixels to route beams of different frequency to respective outputs.

According to a later aspect of the invention there is provided an optoelectronic device comprising an integrated multiple phase spatial light modulator (SLM) having a plurality of pixels, wherein each pixel can phase modulate light by a phase shift having an upper and a lower limit, and wherein each pixel has an input and is responsive to a value at said input to provide a phase modulation determined by said value, and a controller for the SLM, wherein the controller has a control input receiving data indicative of a desired phase modulation characteristic across an array of said pixels for achieving a desired control of light incident on said array, the controller has

outputs to each pixel, each output being capable of assuming only a discrete number of possible values, and the controller comprises a processor constructed and arranged to derive, from said desired phase modulation characteristic, a non-monotonic phase modulation not extending outside said upper and lower limits, and a switch constructed and arranged to select between the possible values to provide a respective one value at each output whereby the SLM provides said non-monotonic phase modulation.

Some or all of the circuitry may be on-chip leading to built-in intelligence. This leads to more compact and ultimately low-cost devices. In some embodiments, some or all on-chip circuitry may operate in parallel for each pixel which may provide huge time advantages; in any event the avoidance of the need to transfer data off chip and thereafter to read in to a computer allows configuration and reconfiguration to be faster.

According to another aspect of the invention there is provided a method of controlling a light beam using a spatial light modulator (SLM) having an array of pixels, the method comprising:

determining a desired phase modulation characteristic across a sub-array of said pixels for achieving the desired control of said beam;

controlling said pixels to provide a phase modulation derived from the desired phase modulation, wherein the controlling step comprises

providing a population of available phase modulation levels for each pixel, said population comprising a discrete number of said phase modulation levels;

on the basis of the desired phase modulation, a level selecting step of selecting for each pixel a respective one of said phase modulation levels; and

causing each said pixel to provide the respective one of said phase modulation levels.

The SLM may be a multiple phase liquid crystal over silicon spatial light modulator having plural pixels, of a type having an integrated wave plate and a reflective element, such that successive passes of a beam through the liquid crystal subject each orthogonally polarised component to a substantially similar electrically-set phase change.

If a non-integrated wave plate is used instead, a beam after reflection and passage through the external wave plate will not pass through the same zone of the SLM, unless it is following the input path, in which case the zero order component of said beam will re-enter the input fibre.

The use of the wave plate and the successive pass architecture allows the SLM to be substantially polarisation independent.

In one embodiment the desired phase modulation at least includes a linear component.

Linear phase modulation, or an approximation to linear phase modulation may be used to route a beam of light, i.e. to select a new direction of propagation for the beam. In many routing applications, two SLMs are used in series, and the displayed information on the one has the inverse effect to the information displayed on the other. Since the information represents phase change data, it may be regarded as a hologram. Hence an output SLM may display a hologram that is the inverse of that displayed on the input SLM. Routing may also be "one-to-many" (i.e. multicasting) or "one-to-all" (i.e. broadcasting) rather than the more usual one-to-one in many routing devices. This may be achieved by correct selection of the relevant holograms.

Preferably the linear modulation is resolved modulo 2pi to provide a periodic ramp.

In another embodiment the desired phase modulation includes a non-linear component.

Preferably the method further comprises selecting, from said array of pixels, a sub-array of pixels for incidence by said light beam.

The size of a selected sub-array may vary from switch to switch according to the physical size of the switch and of the pixels. However, a typical routing device may have pixel arrays of between 100 x 100 and 200 x 200, and other devices such as add/drop multiplexers may have arrays of between 10 x 10 and 50 x 50. Square arrays are not essential.

In one embodiment the level-selecting step comprises determining the desired level of phase modulation at a predetermined point on each pixel and choosing for each pixel, the available level which corresponds most closely to the desired level.

In another embodiment, the level-selecting step comprises determining a subset of the available levels, which provides the best fit to the desired characteristic.

The subset may comprise a subset of possible levels for each pixel.

Alternatively the subset may comprise a set of level distributions, each having a particular level for each pixel.

In one embodiment, the causing step includes providing a respective voltage to an electrode of each pixel, wherein said electrode extends across substantially the whole of the pixel.

Preferably again the level selecting step comprises selecting the level by a modulo 2pi comparison with the desired phase modulation. The actual phase excursion may be from A to A+2pi where A is an arbitrary angle.

Preferably the step of determining the desired phase modulation comprises calculating a direction change of a beam of light.

Conveniently, after the step of calculating a direction change, the step of determining the desired phase modulation further comprises correcting the phase modulation obtained from the calculating step to obtain an improved result.

Advantageously, the correction step is retroactive.

In another embodiment the step of determining the desired phase modulation is retroactive, whereby parameters of the phase modulation are varied in response to a sensed error to reduce the error.

A first class of embodiments relates to the simulation/synthesis of generally corrective elements. In some members of the first class, the method of the invention is performed to provide a device, referred to hereinafter as an accommodation element for altering the focus of the light beam.

An example of an accommodation element is a lens. An accommodation element may also be an anti-astigmatic device, for instance comprising the superposition of two cylindrical lenses at arbitrary orientations.

In other members of the first class, the method of the invention is performed to provide an aberration correction device for correcting greater than quadratic aberrations.

The sub-array selecting step may assign a sub-array of pixels to a beam based on the predicted path of the beam as it approaches the SLM just prior to incidence.

Advantageously, after the sub-array is assigned using the predicted path, it is determined whether the assignment is correct, and if not a different sub-array is assigned.

The assignment may need to be varied in the event of temperature, ageing or other physical changes. The sub-array selection is limited in resolution only by the pixel size. By contrast other array devices such as MEMS have fixed physical edges to their beam steering elements.

An element of this type may be used in a routing device to compensate for aberrations, phase distortions and component misalignment in the system. By providing sensing devices a controller may be used to retroactively control the element and the element may maintain an optimum performance of the system.

In one embodiment of this first class, the method includes both causing the SLM to route a beam and causing the SLM to emulate a corrective element to correct for errors, whereby the SLM receives a discrete approximation of the combination of both a linear phase modulation applied to it to route the beam and a non-linear phase modulation for said corrections.

Synthesising a lens using an SLM can be used to change the position of the beam focused spot and therefore correct for a position error or manufacturing tolerance in one or more other lenses or reflective (as opposed to transmissive) optical elements such as a curved mirror.

The method of the invention may be used to correct for aberrations such as field curvature in which the output 'plane' of the image(s) from an optical system is curved, rather than flat.

In another embodiment of the first class, intelligence may be integrated with sensors that detect the temperature changes and apply data from a look-up table to apply corrections.

In yet another embodiment of this class, misalignment and focus errors are detected by measuring the power coupled into strategically placed sensing devices, such as photodiode arrays, monitor fibres or a wavefront sensor. Compensating holograms are formed as a result of the discrete approximations of the non-linear modulation. Changes or adjustments may then be made to these holograms, for example by applying a stimulus and then correcting the holograms according to the sensed response until the system alignment is measured to be optimised.

In embodiments where the method provides routing functions by approximated linear modulation, adaptation of non-linear modulation due to changes in the path taken through the system desirably takes place on a timescale equivalent to that required to change the hologram routing, i.e. of the order of milliseconds.

A control algorithm may use one or more of several types of compensation.

In one embodiment a look-up table is used with pre-calculated 'expected' values of the compensation taking account of the different routes through the system.

In another embodiment the system is trained before first being operated, by repeated changes of, or adjustments to, the compensating holograms to learn how the system is misaligned.

A further embodiment employs intelligence attached to the monitor fibres for monitoring and calculation of how these compensating holograms should adapt with time to accommodate changes in the system alignment. This is achieved in some embodiments by integrating circuitry components into the silicon backplane of the SLM.

In many optical systems there is a need to control and adapt the power or shape of an optical beam as well as its direction or route through the optical system. In communications applications, power control is required for network management reasons. In general, optical systems require the levelling out or compensation for path and wavelength-dependent losses inside the optical system. It is usually desirable that power control should not introduce or accentuate other performance impairments.

Thus in a second class of embodiments, the modulation applied is modified for controlling the attenuation of an optical channel subjected to the SLM.

In one particular embodiment, the ideal value of phase modulation is calculated for every pixel, and then

multiplied by a coefficient having a value between 0 and 1, selected according to the desired attenuation and the result is compared to the closest available phase level to provide the value applied to the pixels.

In another embodiment, the method further comprises selecting by a discrete approximation to a linear phase modulation, a routing hologram for display by the SLM whereby the beams may be correctly routed; selecting by a discrete approximation to a non-linear phase modulation, a further hologram for separating each beam into main and subsidiary beams, wherein the main beam is routed through the system and the or each subsidiary beam is diffracted out of the system; combining the routing and further holograms together to provide a resultant hologram; and causing the SLM to provide the resultant hologram.

The non-linear phase modulation may be oscillatory.

In yet another embodiment, the method further comprises selecting by a discrete approximation to a linear phase modulation, a routing hologram for display by the SLM whereby the beams may be correctly routed; selecting by a discrete approximation to a non-linear phase modulation, a further hologram for separating each beam into main and subsidiary beams, wherein the main beam is routed through the system and at least one subsidiary beam is incident on an output at an angle such that its contribution is insignificant; combining the routing and further holograms together to provide resultant hologram; and causing the SLM to display the resultant hologram.

The non-linear phase modulation may be oscillatory.

In a closely allied class of embodiments, light may be selectively routed to a sensor device for monitoring the light in the system. The technique used may be a power control technique in which light diverted from the beam transmitted through the system to reduce its magnitude is made incident on the sensor device.

In another class of embodiments, a non-linear phase modulation profile is selected to provide beam shaping, for example so as to reduce cross-talk effects due to width clipping. This may use a pseudo amplitude modulation technique.

In a further class of embodiments, the method uses a non-linear modulation profile chosen to provide wavelength dependent effects.

The light may be at a telecommunications wavelength, for example 850 nm, 1300 nm or in the range 1530 nm to 1620 nm.

Brief description of the drawings

Exemplary embodiments of the invention will now be described with reference to the accompanying drawings in which:

Figure 1 shows a cross-sectional view through an exemplary SLM suitable for use in the invention;

Figure 2 shows a sketch of a routing device in which a routing SLM is used additionally to provide correction for performance impairment due to misalignment;

Figure 3 shows a sketch of a routing device in which a routing SLM is used to route light beams and an additional SLM provides correction for performance impairment due to misalignment;

Figure 4 shows a block diagram of an adaptive corrective SLM;

Figure 5 shows an adaptive optical system using three SLMs;

Figure 6 shows a partial block diagram of a routing device with a dual function SLM and control arrangements;

Figure 7 shows a block diagram of an SLM for controlling the power transferred in an optical system;

Figure 8a shows a diagram of phase change distribution applied by a hologram for minimum attenuation;

Figure 8b shows a diagram of phase change distribution applied by a hologram enabling attenuation of the signal;

Figure 9 shows a power control system;

Figure 10 shows a phasor diagram showing the effect of non-linear oscillatory phase modulation applied to adjacent pixels;

Figure 11 shows a schematic diagram of a part of an optical routing system illustrating the effects of clipping and cross talk;

Figure 12 shows a partial block diagram of a system enabling beams of different wavelength from a composite input beam to be separately controlled before recombination; and

Figure 13 shows a schematic diagram of an add/drop multiplexer using an SLM.

Figure 14 is a diagram similar to Figure 12 but showing a magnification stage for increasing the effective beam deflection angle;

Figure 15 shows a vector diagram of the operation of an add/drop multiplexer;

Figure 16 shows a block diagram showing how loop back may be effected;

Figure 17 is a vector diagram illustrating the operation of part of Figure 16;

Figure 18 is a vector diagram of a multi-input/multi output architecture;

Figure 19 is a graph showing the relative transmission Tlo for in-band wavelengths as a function of the ratio of the wavelength offset u to centre of the wavelength channel separation;

Figure 20 is a graph showing the relative transmission Thi inside adjacent channels;

Figure 21 shows a logical diagram of the sorting function;

Figure 22 shows a block diagram of an add/drop node using two routing modules;

Figure 23 shows a block diagram of modules used to cross-connect two rings;

Figure 24 shows a block diagram of routing modules connected to provide expansion;

Figure 25 shows a block diagram of an optical cross-connect;

Figure 26 shows a block diagram of an upgrades node having a cascaded module at an expansion output port;

Figure 27 is a graph showing the effect of finite hologram size of the field of a beam incident on a hologram;

Figure 28 shows a schematic layout of a wavelength filter device; and,

Figure 29 shows a schematic layout of an add/drop device;

Figure 30 shows a block diagram of an optical test set;

Figure 31 is a diagram showing the effect of finite hologram size on a beam at a wavelength different to the centre wavelength associated with the hologram;

Figure 32 shows the truncated beam shapes for wavelengths at various wavelength differences from the centre of the wavelength channel dropped in isolation;

Figure 33 shows the overlap integrands of the beams of Figure 32 with the fundamental mode of the fibre;

Figure 34 shows beam output positions for different wavelengths with respect to two optical fibres; and

Figure 35 shows the overlap integrand between the beams of Figure 34 and the fundamental mode of one of the optical fibres.

Description of the preferred embodiments

Many of the embodiments of the invention centre upon the realisation that the problems of the prior art can be solved by using a reflective SLM having a two-dimensional array of phase-modulating elements that is large in number, and applying a number of light beams to groups of those phase-modulating elements. A significant feature of these embodiments is the fact that the size, shape and position of those groups need not be fixed and can, if need be, be varied. The groups may display holograms which can be set up as required to deflect the light so as to provide a non-specular reflection at a controllable angle to the specular reflection direction. The holograms may additionally or alternatively provide shaping of the beam.

The SLM may thus simulate a set of highly flexible mirrors, one for each beam of light. The size, shape and position of each mirror can be changed, as can the deflection and the simulated degree of curvature.

Devices embodying the invention act on light beams incident on the device to provide emerging light beams which are controlled independently of one another. Possible types of control include control of direction, control of power, focussing, aberration compensation, sampling and beam shaping.

The structure and arrangement of polarisation-independent multiple phase liquid crystal over silicon spatial light modulators (SLMs) for routing light beams using holograms are discussed in our co-pending patent application PCT/GB00/03796. Such devices have an insertion loss penalty due to the dead-space between the pixels. As discussed in our co-pending patent application GB0107742.9, the insertion loss may be reduced significantly by using a reflecting layer inside the substrate positioned so as to reflect the light passing between the pixels back out again.

Referring to Figure 1, an integrated SLM 200 for modulating light 201 of a selected wavelength, e.g. 1.5 μm, consists of a pixel electrode array 230 formed of reflective aluminium. The pixel electrode array 230, as will later be described acts as a mirror, and disposed on it is a quarter-wave plate 221. A liquid crystal layer 222 is disposed on the quarter-wave plate 221 via an alignment

layer (not shown) as is known to those skilled in the art of liquid crystal structures. Over (as shown) the liquid crystal layer 222 are disposed in order a second alignment layer 223, a common ITO electrode layer 224 and an upper glass layer 225. The common electrode layer 224 defines an electrode plane. The pixel electrode array 230 is disposed parallel to the common electrode plane 224. It will be understood that alignment layers and other intermediate layers will be provided as usual. They are omitted in Figure 1 for clarity.

The liquid crystal layer 222 has its material aligned such that under the action of a varying voltage between a pixel electrode 230 and the common electrode 224, the uniaxial axis changes its tilt direction in a plane normal to the electrode plane 224.

The quarter wave plate 221 is disposed such that light polarised in the plane of tilt of the director is reflected back by the mirror 230 through the SLM with its plane of polarisation perpendicular to the plane of tilt, and vice-versa.

Circuitry, not shown, connects to the pixel electrodes 230 so that different selected voltages are applied between respective pixel electrodes 230 and the common electrode layer 224.

Considering an arbitrary light beam 201 passing through a given pixel, to which a determined potential difference is applied, thus resulting in a selected phase modulation due to the liquid crystal layer over the pixel

electrode 230. Consider first and second orthogonal polarisation components, of arbitrary amplitudes, having directions in the plane of tilt of the director and perpendicular to this plane, respectively. These directions bisect the angles between the fast and slow axes of the quarter-wave plate 221.

The first component experiences the selected phase change on the inward pass of the beam towards the aluminium layer 230, which acts as a mirror. The second component experiences a fixed, non-voltage dependent phase change.

However, the quarter-wave plate 221 in the path causes polarisation rotation of the first and second components by 90 degrees so that the second polarisation component of the light beam is presented to the liquid crystal for being subjected to the selected phase change on the outward pass of the beam away from the mirror layer 230. The first polarisation component experiences the fixed, non-voltage dependent phase change on the outward pass of the beam. Thus, both of the components experience the same overall phase change contribution after one complete pass through the device, the total contribution being the sum of the fixed, non-voltage dependent phase and the selected voltage dependent phase change.

It is not intended that any particular SLM structure is essential to the invention, the above being only exemplary and illustrative. The invention may be applied to other devices, provided they are capable of multiphase operation and are at least somewhat polarisation independent at the wavelengths of concern. Other SLMs are

to be found in our co-pending applications WO01/25840, EP1050775 and EP1053501 as well as elsewhere in the art.

Where liquid crystal materials other than ferroelectric are used, current practice indicates that the use of an integral quarter wave plate contributes to the usability of multiphase, polarisation-independent SLMs.

A particularly advantageous SLM uses a liquid crystal layer configured as a pi cell.

Referring to Figure 2, an integrated SLM 10 has processing circuitry 11 having a first control input 12 for routing first and second beams 1,2 from input fibres 3,4 to output fibres 5,6 in a routing device 15. The processing circuitry 11 includes a store holding control data which is processed to generate holograms which are applied to the SLM 10 for control of light incident upon the SLM 10. The control data are selected in dependence upon the data at the control input 12, and may be stored in a number of ways, including compressed formats. The processing circuitry 11, which may be at least in part on-chip, is also shown as having an additional input 16 for modifying the holograms. This input 16 may be a physical input, or may be a "soft" input -for example data in a particular time slot.

The first beam 1 is incident on, and processed by a first array, or block 13 of pixels, and the second beam 2 is incident on and processed by a second array, or block 14 of pixels. The two blocks of pixels 13,14 are shown as contiguous. In some embodiments they might however be

separated from one another by pixels that allow for misalignment.

Where the SLM is used for routing the beams 1,2 of light, this is achieved by displaying a linearly changing phase ramp in at least one direction across the blocks or arrays 13,14. The processing circuitry 11 determines the parameters of the ramp depending on the required angle of deflection of the beam 1,2. Typically the processing circuitry 11 stores data in a look-up table, or has access to a store of such data, to enable the required ramp to be created in response to the input data or command at the first control input 12. The angle of deflection is probably a two dimensional angle where the plane common to the direction of the incident light and that of the reflected light is not orthogonal to the SLM.

Assigning x and y co-ordinates to the elements of the SLM, the required amount of angular shift from the specular reflection direction may be resolved into the x and y directions. Then, the required phase ramp for the components is calculated using standard diffraction theory, as a "desired phase characteristic".

This process is typically carried out in a training stage, to provide the stored data in the look-up table.

Having established a desired phase modulation characteristic across the array so as to achieve the desired control of said beam the processing circuitry 11 transforms this characteristic into one that can be displayed by the pixels 13,14 of the SLM 10. Firstly it

should be borne in mind that the processing circuitry 11 controlling the pixels of an SLM 10 is normally digital. Thus there is only a discrete population of values of phase modulation for each pixel, depending on the number of bits used to represent those states.

To allow the pixels 13,14 of the SLM 11 to display a suitable phase profile, the processing circuitry 11 carries out a level selecting operation for each pixel. As will be appreciated, the ability of the SLM to phase modulate has limits due to the liquid crystal material, and hence a phase ramp that extends beyond these limits is not possible. To allow for the physical device to provide the effects of the ideal device (having a continuously variable limitless phase modulation ability), the desired phase ramp may be transformed into a non-monotonic variation having maxima and minima within the capability limits of the SLM 10. In one example of this operation, the desired phase modulation is expressed modulo 2pi across the array extent, and the value of the desired modulo-2pi modulation is established at the centre of each pixel. Then for each pixel, the available level nearest the desired modulation is ascertained and used to provide the actual pixel voltage. This voltage is applied to the pixel electrode for the pixel of concern.

For small pixels there may be edge effects due to fringing fields between the pixels and the correlations between the director directions in adjacent pixels. In such systems the available phase level nearest to the value of the desired modulo-2pi modulation at the centre of each pixel (as described above) should be used as a first

approximation. A recursive algorithm is used to calculate the relevant system performance characteristic taking into account these 'edge' effects and to change the applied level in order to improve the system performance to the required level.

"Linear" means that the value of phase across an array of pixels varies linearly with distance from an arbitrary origin, and includes limited linear changes, where upon reaching a maximum phase change at the end of a linear portion, the phase change reverts to a minimum value before again rising linearly.

The additional input 16 causes the processing circuitry 11 to modify the holograms displayed by applying a discrete approximation of a non-linear phase modulation so that the SLM 10 synthesises a corrective optical element such as a lens or an aberration corrector. As will be later described, embodiments may also provide power control (attenuation), sampling and beam shaping by use of the non-linear phase modulation profile. "Non-linear" is intended to signify that the desired phase profile across an array of pixels varies with distance from an arbitrary origin in a curved and/or oscillatory or like manner that is not a linear function of distance. It is not intended that "non-linear" refer to sawtooth or like profiles formed by a succession of linear segments of the same slope mutually separated by "flyback" segments.

The hologram pattern associated with any general non-linear phase modulation $\exp j\phi(u) = \exp j(\phi_0(u) + \phi_1(u) + \phi_3(u) \ldots.)$ where j is the complex operator, can be considered

as a product. In this product, the first hologram term in the product exp j $\phi_0(u)$ implements the routing while the second hologram term exp j $\phi_1(u)$ implements a corrective function providing for example lens simulation and/or aberration correction. The third hologram term exp j $\phi_2(u)$ implements a signal processing function such as sampling and/or attenuation and/or beam shaping. The routing function is implemented as a linear phase modulation while the corrective function includes non-linear terms and the signal processing function includes non-linear oscillatory terms.

Different methods of implementing the combination of these three terms are possible. In one embodiment the total required phase modulation $\phi_0(u) + \phi_1(u) + \phi_2(u)$ including linear routing and corrective function and the signal processing function is resolved modulo 2 pi and approximated to the nearest available phase level before application by the pixels. In another embodiment the summation of the phase modulation required for the linear and corrective function $\phi_0(u) + \phi_1(u)$ is resolved modulo 2 pi and approximated to the nearest phase level in order to calculate a first phase distribution. A second phase distribution $\phi_2(u)$ is calculated to provide sampling and/or attenuation and/or beam shaping. The two phase distributions are then added, re-resolved modulo 2 pi and approximated to the nearest available phase level before application by the pixels. Other methods are also possible.

Mathematically the routing phase modulation is periodic due to the resolution modulo 2pi and by nature of its linearity.

Therefore the routing phase modulation results in a set of equally spaced diffraction orders. The greater the number of available phase levels the closer the actual phase modulation to the ideal value and the stronger the selected diffraction order used for routing.

By contrast, the corrective effects are realised by non-linear phase changes $\phi_1(u)$ that are therefore non-periodic when resolved modulo 2pi. This non-periodic phase modulation changes the distribution of the reflected beam about its centre, but not its direction. The combined effect of both linear (routing) and non-periodic phase modulation is to change both the direction and distribution of the beam, as may be shown using the convolution theorem.

The signal processing effects are usually realised by a method equivalent to 'multiplying' the initial routing and/or corrective hologram $\exp j(\phi_0(u)+\phi_1(u))$ by a further hologram $\exp j\ \phi_2(u)$ in which $\phi_2(u)$ is non-linear and oscillatory. Therefore the set of diffraction orders associated with the further hologram creates a richer structure of subsidiary beams about the original routed beam, as may be shown using the convolution theorem.

While this explanation is for a one-dimensional phase modulator array the same principle may be applied in 2-D.

Hence in a reconfigurable optical system this non-linear phase modulation may be applied by the same spatial light modulator(s) that route the beam. It will be understood by those skilled in the art that the SLM may have only a single control input and the device may have processing circuitry for combining control data for routing and control data for corrective effects and signal processing effects to provide an output to control the SLM.

The data may be entered into the SLM bit-wise per pixel so that for each pixel a binary representation of the desired state is applied. Alternatively, the data may be entered in the form of coefficients of a polynomial selected to represent the phase modulation distribution of the pixel array of concern in the SLM. This requires calculating ability of circuitry of the SLM, but reduces the data transfer rates into the SLM. In an intermediate design the polynomial coefficients are received by a control board that itself sends bit-wise per pixel data to the SLM. On-chip circuitry may interpret data being entered so as to decompress that data.

The pixel array of concern could be all of the pixels associated with a particular beam or a subset of these pixels. The phase modulation distribution could be a combined phase modulation distribution for both routing and corrective effects or separate phase modulation distributions for each. Beam shaping, sampling and attenuation phase modulation distributions, as will be described later, can also be included. In some cases it may not be possible to represent the phase modulation distribution as a simple polynomial. This difficulty may

be overcome by finding a simple polynomial giving a first approximation to the desired phase modulation distribution. The coefficients of this polynomial are sent to the SLM. A bit-wise correction is sent for each pixel requiring a correction, together with an address identifying the location of the pixel. When the applied distribution is periodic only the corrections for one period need be sent.

The processing circuitry 11 may be discrete from or integral with the SLM, or partly discrete and partly integral.

Referring to Figure 3, a routing device 25 includes two SLMs 20,21 which display holograms for routing light 1,2 from an input fibre array 3,4 to an output fibre array 5,6. The two SLMs are reflective and define a zigzag path. The first SLM 20 hereinafter referred to as a "corrective SLM" not only carries out routing but also synthesises a corrective optical element. The second SLM 21 carries out only a routing function in this embodiment, although it could also carry out corrections or apply other effects if required. The second SLM 21 is hereinafter referred to as a "routing SLM". Although the corrective SLM 20 is shown disposed upstream of the routing SLM 21, it may alternatively be disposed downstream of the routing SLM 21, between two routing SLMs, or with systems using routing devices other than the routing SLM 21.

The routing SLM 21 has operating circuitry 23 receiving routing control data at a routing control input 24, and generating at the SLM 21 sets of holograms for routing the beams 1,2. The corrective SLM 20 has operating

circuitry 26 receiving compensation or adaptation data at a control input 27 to cause the SLM 20 to display selected holograms. In this embodiment, the SLM 20 forms a reflective lens.

Synthesising a lens at the SLM 20 can be used to change the position of the beam focused spot and therefore correct for a position error or manufacturing tolerance in one or more other lenses or reflective (as opposed to transmissive) optical elements, such as a curved mirror. The synthesised lens can be spherical or aspheric or cylindrical or a superposition of such lenses. Synthesised cylindrical lenses may have arbitrary orientation between their two long axes and the lens focal lengths can both be positive, or both be negative, or one can be positive and the other negative.

To provide a desired phase modulation profile for a lens or curved mirror to compensate for an unwanted deviation from a required system characteristic, the system is modelled without the lens/mirror. Then a lens/mirror having the correction to cancel out the deviation is simulated, and the parameters of the lens/mirror are transformed so that when applied to an SLM the same effect is achieved.

In one application what is required is to adjust the position and width of the beam waist, of a Gaussian-type beam at some particular point in the optical system, in order to compensate for temperature changes or changes in routing configuration. Hence two properties of the beam must be adjusted and so it is necessary to change two properties of the optical system. In a conventional static

optical system both a lens focal length and the position of the lens are selected to achieve the required beam transformation. In the dynamic systems under consideration it is rarely possible deliberately to adjust the position of the optical components. A single variable focus action at a fixed position changes both the position and the width of the beam waist and only in special circumstances will both properties be adjusted to the required value.

One method to overcome this problem is to apply both corrective phase and corrective 'pseudo-amplitude' modulation (to be described later) with a single SLM. However the amplitude modulation reduces the beam power which may be undesirable in some applications. A further and preferred method is to apply corrective phase modulation with two separate SLMs.

For example consider coupling from one input fibre (or input beam) through a routing system into the selected output fibre (or output beam). Inside the routing system there are at least two SLMs carrying out a corrective function. They may also be routing and carrying out other functions (to be described in this application). In between a given pair of SLMs carrying out focus correction there is an intermediate optical system.

At the first SLM carrying out a corrective function there may be calculated and/or measured the incident amplitude and phase distribution of the input beam that had propagated from the input fibre or beam. At the second SLM carrying out a corrective function there may be calculated and/or measured the ideal amplitude and phase distribution

that the output beam would adopt if coupling perfectly into the output fibre or beam. This can be achieved by backlaunching from the output fibre or beam or by a simulation of a backlaunch. The required focus correction functions of these two SLMs is to transform the incident amplitude and phase distribution arriving at the first SLM to the ideal amplitude and phase distribution at the second SLM to achieve perfect (or the desired) coupling efficiency into the output fibre or output beam.

The corrective phase modulation to be applied at the first SLM should be calculated, so as to achieve the ideal amplitude distribution at the second SLM as the beam arrives at the second SLM after passing from the first SLM and through the intermediate system. This calculation should take into account propagation through the intermediate system between the first and second SLMs. Hence the function of the first SLM is to correct the beam so as to achieve the ideal amplitude distribution for the output beam. The beam phase distribution should also be calculated as it arrives at the second SLM. The corrective phase distribution to be applied at the second SLM should be calculated so as to transform the phase distribution of the beam incident upon it from the intermediate system to the ideal phase distribution required for the output beam at the second SLM.

Two variables available at the SLM to effect corrections from an optimal or other desired level of performance are firstly the blocks of pixels that are delineated for the incident light beam, and secondly the hologram that is displayed on the block(s) of concern.

Starting with the delineation of blocks, it should be borne in mind that the point of arrival of light on the SLM can only be predicted to a certain accuracy and that the point may vary according to physical changes in the system, for example due to temperature effects or ageing. Thus, the device allows for assessment of the results achieved by the current assignment, and comparison of those results with a specified performance. In response to the comparison results, the delineation may be varied so as to improve the results.

In one embodiment a training phase, uses for example a hill climbing approach to control and optimise the position of the centre of the block. Then if the "in-use" results deviate by more than a specified amount from the best value, the delineation of the block is varied. This process reassignment may step the assigned block one pixel at a time in different directions to establish whether an improved result is achieved, and if so continuing to step to endeavour to reach an optimum performance. The variation may be needed where temperature effects cause positional drift between components of the device. It is important to realise that unlike MEMS systems and the like, all the pixels are potentially available for all the beams. Also the size, shape and location of a delineated block is not fixed.

Equally the size and shape of a block may be varied if required. Such changes may be necessary under a variety of situations, especially where a hologram change is needed. If for example a hologram requiring a larger number of

pixels becomes necessary for one beam, the size of the block to display that hologram can be altered. Such changes must of course usually be a compromise due to the presence of other blocks (possibly contiguous with the present block) for displaying holograms for other beams of light.

Monitoring techniques for determining whether the currently assigned block is appropriate include the techniques described later herein as "taking moments".

Turning to variation of the hologram that is displayed on the block of concern, one option to take into account for example physical changes in the system, such as movement out of alignment, is to change one normal linear-type routing hologram for another, or to adjust the present hologram in direct response to the sensed change. Thus if, due for example to temperature effects, a target location for a beam moves, it may be necessary to change the deflection currently being produced at a pixel block. This change or adjustment may be made in response to sensed information at the target location, and may again be carried out "on-line" by varying the hologram step by step. However, it may be possible to obtain an actual measure of the amount and direction of change needed, and in this case either a new hologram can be read in to the SLM or a suitable variation of the existing hologram carried out.

As well as, or instead of, linear changes to linear routing holograms, corrective changes may be needed, for example to refocus a beam or to correct for phase distortion and non-focus aberrations.

Having corrected the beam focus other aberrations may remain in the system. Such aberrations distort the phase distributions of the beams. These aberrations will also change with routing configuration as the beams are passing through different lenses and/or different positions on the same lenses. Similarly the aberrations will change with temperature. To obtain stable and acceptable performance of a reconfigurable optical system, the aberrations can be corrected dynamically.

To provide a desired phase modulation profile for these aberrations the system may be modelled or measured to calculate the phase distortion across the SLM, compared to the ideal phase distribution. The ideal phase distribution may again be found by modelling the system 'backwards' from the desired output beam, or by backlaunching and measurement, while the actual phase distribution may be found by modelling the system forwards from the input beam or measurement. The calculations will include the effects of reflection from the SLM itself. The corrective function of the SLM is to transform between the actual and ideal phase distortion. The phase distortion is defined as the phase difference between the actual phase distribution and the ideal phase distribution. The desired corrective profile is the conjugate phase of the phase distortion.

Alternatively, these corrective functions can be shared by two SLMs, which allows an extra degree of freedom in how the beam propagates inside the intermediate system between the two SLMs.

Further, given a real system a sampling method (as will be described later) may be used to direct a fraction of the beam towards a wavefront sensor that may assess the beam. So far the process is deterministic. Then the changes are applied to the real system, and perturbations on the parameters are applied while monitoring the sensor and/or the input/output state, so as to determine whether an optimum configuration is achieved. If not, the parameters are changed until a best case is achieved. Any known optimising technique may be used. It is preferred to provide a reasonable starting point by deterministic means, as otherwise local non-optimum performance maxima may be used instead of the true optimum.

The method or device of the invention may be used to correct for aberrations such as field curvature in which the output 'plane' of the image(s) from an optical system is curved, rather than flat.

Equally, even if in use the SLM forms a corrective element by having non-linear phase modulation applied across it, if it is operated in separate training and use phases, it may be desirable while training for the SLM to route as well. In this case the SLM scans the processed beam over a detector or routes the beam, for example using one or more dummy holograms, into a monitor fibre.

Referring now to Figure 4, the corrective SLM 20, used purely for synthesising a corrective element, has operating circuitry 125, and further comprises processing circuitry 122 and temperature sensors 123. In this embodiment the operating circuitry, temperature sensors and processing

circuitry are integrated on the same structure as the rest of the SLM, but this is not critical to the invention. Associated with the processing circuitry is a store 124 into which is programmed a lookup table. The sensors detect temperature changes in the system as a whole and in the SLM, and in response to changes access the look up table via the processing circuitry 122 to apply corrections to the operating circuitry. These corrections affect the holograms displayed on the blocks 13, 14 of pixels. The sensors may also be capable of correction for temperature gradients.

This technique may also be applied to an SLM used for routing.

Referring now to Figure 5, an optical system 35 has a corrective SLM 30 with operating circuitry 31, and processing circuitry 32. The system includes further devices, here second and third SLMs 33 and 34, disposed downstream of the corrective SLM 30. The second SLM 33 is intended to route light to particular pixel groups 15, 16 of the third SLM 34. The third SLM 34 has monitor sensors 37 for sensing light at predetermined locations. In one embodiment these sensors 37 are formed by making the reflective layer partially transmissive, and creating a sensing structure underneath. In another, the pixel electrode of selected pixels is replaced by a silicon photodetector or germanium sensor structure.

In either case, circuitry may be integrated into the silicon backplane to process the output of the sensors 37, for example to compare the outputs of adjacent sensors 37,

or to threshold one sensor against neighbouring sensor outputs. Where possible, processing circuitry is on chip, as it is possible to reduce the time taken after light has been received to respond to it in this way. This is because there is no need to read information off-chip for processing, and also because calculations may be able to be performed in parallel.

Provided the routing-together with any compensation effects from the corrective SLM 30 - is true, the sensors 37 will receive only a minimal amount of light. However where misalignment or focus errors are present, the extent of such errors is detected by measuring the power coupled into the monitor sensors. To that end, the sensors 37 provide data, possibly after some on-chip processing, to the processing circuitry 32. The processing circuitry 32 contains a control algorithm to enable it to control the operating circuitry 31 to make changes of, or adjustments to, the compensating holograms displayed on the corrective SLM 30 until the system alignment is measured to be optimised. In some embodiments, changes to the sub-arrays to which beam affecting holograms are applied may be made in response to the sensor output data.

In another embodiment a determined number of dummy ports are provided. For example for a connector two or more such ports are provided and for routing devices three or more dummy ports are provided. These are used for continuous misalignment monitoring and compensation, and also for system training at the start.

Although some embodiments can operate on a trial and error basis, or can be adapted "on the fly", a preferred optical system uses a training stage during which it causes to be stored in the look-up table data enabling operation under each of the conditions to be encountered in use.

In one embodiment, in the training stage, a set of initial starting values is read in for application to the SLM 30 as hologram data, then light is applied at a fibre and the result of varying the hologram is noted. The variations may include both a change of pixels to which the hologram is applied, and a change of the hologram. Where more than one fibre is provided, light is applied to each other fibre in turn, and similar results obtained. Then other environmental changes are applied and their effects noted, e.g. at the sensors 37, and the correction for input data either calculated or sought by varying the presently-applied data using optimisation techniques to seek best or acceptable performance.

Then, in use, the system may be operated on a deterministic basis - i.e. after ascertaining what effect is sought, for example responding to a temperature change or providing a change in routing, the change to the applied data for operating the device can be accessed without the need for experiment.

A preferred embodiment operates in the deterministic way, but uses one or more reference beams of light passed through the device using the SLM 30. In that way the effect of deviations due to the device itself can be isolated. Also it can be confirmed that changes are being

correctly made to take into account environmental and other variations.

The device may also have further monitor sensors placed to receive the zero-order reflections from the SLM(s) to enable an assessment to be made of the input conditions. For example, where an input channel fails, this can be determined by observing the content of the specular reflection from the light beam representing that channel. Where there are two SLMs as in some routing systems, the specular reflections from each SLM may be sensed and compared.

Referring now to Figure 6, a dual-function SLM 40 provides both routing and correction. The SLM 40 has operating circuitry 41 and processing circuitry 42. The operating circuitry 41 receives routing data at a first control input 44 for causing the processing circuitry 42 to generate the holograms on the SLM 40 to achieve the desired routing. The processing circuitry 42 also receives routing data on an input 45, and controls the operating circuitry 41 using an algorithm enabling adaptation due to changes in the path taken through the system to take place on a timescale equivalent to that required to change the hologram display, i.e. of the order of milliseconds.

The control algorithms for this embodiment may use one or more of several types of compensation.

In one embodiment a look-up table is stored in a memory 43, the look-up table storing pre-calculated and

stored values of the compensation for each different route through the system.

In another embodiment the system is trained before first being operated, using changes of, or to the compensating holograms to learn how changing the compensating holograms affects the system performance, the resulting data being held in the memory 43.

In a further embodiment, the processing circuitry 42 employs intelligence responsive to signals from monitor sensors 47,48 for monitoring and calculation of how these compensating holograms should adapt with time to accommodate changes in the system alignment. This is achieved in some embodiments by integrating circuitry components into the silicon backplane of the SLM, or by discrete components such as germanium detectors where the wavelengths are beyond those attainable by silicon devices. In some embodiments sensors 47 are provided for sensing light at areas of the SLM, and in others the sensors 48 may instead or also be remote from the SLM 40 to sense the effects of changes on the holograms at the SLM 40.

Referring now to Figure 7, an optical system 80 includes an SLM 81 for routing beams 1,2 of light from input fibres 3,4 to output fibres 5,6 by means of holograms displayed on pixel groups 13,14 of the SLM. The holograms are generated by processing circuitry 82 which responds to a control input 83 to apply voltages to an array of pixellated elements of the SLM, each of which is applied substantially uniformly across the pixel of concern. This

result is a discrete approximation of a linear phase modulation to route the beams.

The processing circuitry 82 calculates the ideal linear phase ramp to route the beams, on the basis of the routing control input 83 and resolves this phase modulo 2Pi. The processing circuitry at each of the pixels then selects the closest available phase level to the ideal value. For example if it is desired to route into the m'th diffraction order with a grating period Ω the ideal phase at position u on the SLM 81 is $2pi.mu/\Omega$. Therefore, approximately, the phase goes linearly from zero up to 2pi over a distance Ω/m after which it falls back to zero, see Figure 8a.

Control of the power in individual wavelength channels is a common requirement in communication systems. Typical situations are the need to avoid receiver saturation, to maintain stable performance of the optical amplifiers or to suppress non-linear effects in the transmission systems that might otherwise change the information content of the signals. Power control may be combined with sampling or monitoring channels to allow adjustment of the power levels to a common power level (channel equalisation) or to some desired wavelength characteristic.

Deliberate changes to the value of Ω can be used to reduce the coupling efficiency into the output in order to provide a desired attenuation. This is suitable for applying a low attenuation. However, it is not suitable for a high attenuation as, in that event, the beam may then be deflected towards another output fibre, increasing the

crosstalk. If there is only one output fibre this method may be used regardless of the level of attenuation.

To provide a selected desired attenuation of the optical channel in the system, processing circuitry 85 responds to an attenuation control input 84 to modify the operation of the operating circuitry 83 whereby the operating circuitry selects a linear phase modulation such that by the end of each periodic phase ramp the phase has reached less than 2pi, see Figure 8b.

This may be achieved by calculating the ideal value of phase for every pixel, and then multiplying this ideal value by a coefficient r between 0 and 1, determined on the basis of the desired attenuation. The coefficient is applied to every pixel of the array in order to get a reduced level per pixel, and then the available phase level nearest to the reduced level is selected.

The method of this embodiment reduces the power in this diffraction order by making the linear phase modulation incomplete, such that by the end of each periodic phase ramp the phase has only reached 2pi.r. It has however been found that the method of this embodiment may not provide sufficient resolution of attenuation. It also increases the strength of the unwanted diffraction orders likely to cause crosstalk. When combined with deliberate changes in the length of the ideal phase ramp the resolution of attenuation may be improved. Again if there is only a single output fibre the crosstalk is less important.

Resolution may also be improved by having a more complex incomplete linear phase modulation. However, the unwanted diffraction orders may still remain too strong for use in a wavelength-routed network. Hence to control the power by adapting the routing hologram may have undesirable performance implications in many applications, as crosstalk worsens with increase of attenuation. The problem can be overcome by use of a complex iterative design. This could be used to suppress the higher orders but makes the routing control more expensive.

Referring now to Figure 9, a system 99 includes an SLM 90 controlled by applying a discrete approximation of a linear phase modulation to route beams 1,2 from input fibres 3,4 to output fibres 5,6 as previously described with respect to Figure 7. Thus operating circuitry 91 selects a routing hologram for display by the SLM, in accordance with a routing input 92, whereby the beams may be correctly routed, using a look up table or as otherwise known. A memory holds sets of data each allowing the creation of a respective power controlling hologram. Processing circuitry 93 runs an algorithm which chooses a desired power controlling hologram corresponding to a value set at a power control input 94. The power controlling hologram is selected to separate each beam into respective main 1a, 2a and subsidiary 1b, 2b beams, such that the main beams 1a, 2a are routed through the system and the or each subsidiary beam(s) 1b, 2b is/ are diffracted out of the system, for example to a non-reflective absorber 97.

The processing circuitry 93 applies the power controlling hologram data to a second input 95 of the

operating circuitry 91 which acts on the routing hologram data so as to combine the routing and power controlling holograms together to provide a resultant hologram. The operating circuitry then selects voltages to apply to the SLM 90 so that the SLM displays the resultant hologram.

Thus power in a routing context is controlled by combining the routing hologram with another hologram that has the effect of separating the beam into a main beam and a set of one or more subsidiary beams. Of these the main beam is allowed to propagate through the system as required while the other(s) are diffracted out of the system.

For example consider a hologram that applies phases of $+\phi$ and $-\phi$ on adjacent pixels. In terms of real and imaginary parts this hologram has the same real part, cos ϕ, on every pixel, see Figure 10, while the imaginary part oscillates between $\pm \sin \phi$. It can be shown using Fourier theory that the net effect is to multiply the amplitude of the original routed beam by a factor cos ϕ, and to divert the unwanted power into a set of weak beams at angles that are integer multiples of $\pm\lambda/2p$ with respect to the original routed beam, where λ is the operating wavelength and p is the pixel pitch.

The system is designed from a spatial viewpoint such that light propagating at such angles falls outside the region of the output fibres 5,6 of Figure 9. An alternative design directs the unwanted light into output fibres 5,6 at such a large angle of incidence that the coupling into the fundamental mode is very weak, and has no substantial effect. In this case the unwanted power is

coupling into the higher-order modes of the fibre and so will be attenuated rapidly. A fibre spool or some other technique providing mode stripping is then used on the output fibre before the first splice to any other fibre.

In either case, the effective attenuation of the beam is 10 $\log_{10} \cos^2\phi$. Hence, in this way, polarisation-independent phase modulation may be used to create an effect equivalent to polarisation-independent amplitude modulation. This is termed herein "pseudo amplitude modulation". In this particular case the pseudo-amplitude modulation applied at every pixel is $\cos \phi$.

It will be clear to those skilled in the art that use of alternate pixels as the period of alternation is not essential, and may in some cases be undesirable. This is because of edge effects in the pixels.

The period and pattern of alternation can be varied so as to adjust the deflection angle of the 'unwanted power'. This light directed away from the output fibres can be collected and used as a monitor signal. Hence the pseudo-amplitude modulation can be used to sample the beam incident on an SLM as previously discussed. This sampling hologram can be combined with a routing and/or power control and/or corrective SLM. In the latter case the sampled beam can be directed towards a wavefront sensor and then used to assess the quality of the beam correction. While the pseudo-amplitude modulation as described above is applied to the whole beam, it could be applied selectively to one or more parts of the beam.

A further modification to this pseudo-amplitude modulation is to multiply it by a further phase modulating hologram such as to achieve a net effect equivalent to a complex modulation.

It is often important that the sampling hologram takes a true sample of the output beam. Therefore in some cases the sampling hologram should be applied after the combination of all other desired effects including resolution modulo 2 pi and approximation to the nearest available phase level. In this case the overall actual phase modulation distribution is achieved by a method equivalent to forming the product of the sampling hologram and the overall hologram calculated before sampling.

Similar pseudo-amplitude modulation techniques may be extended to suppress the crosstalk created by clipping of the beam tails at the edges of each hologram and to tailor the coupling efficiency vs. transverse offset characteristic of the output fibres. Since the transverse position at the output fibre is wavelength dependent, this tailoring of the coupling efficiency vs. offset can be used to tailor the wavelength response of the system. This is important in the context of wavelength division multiplexing (WDM) systems where the system wavelength can be expected to lie anywhere in the range of the available optical amplifiers. The output angle for beam steering using an SLM and periodic linear phase modulation is proportional to the wavelength while the focal length of corrective lenses is also wavelength-dependent. Therefore a hologram configured to give the optimum coupling efficiency at one wavelength will produce an output beam with transverse and/or longitudinal offset at another

wavelength. These effects result in wavelength-dependent losses in systems required to route many wavelength channels as an ensemble. Hence a method designed to flatten or compensate for such wavelength-dependent losses is useful and important.

Among the envisaged applications are the flattening of the overall wavelength response and the compensation for gain ripple in optical amplifiers, especially Erbium-doped fibre optic amplifiers (EDFA).

An SLM device may also be used to adapt the shape, e.g. the mode field shape, of a beam in order to suppress crosstalk.

Beam shaping is a type of apodisation. It is advantageously used to reduce crosstalk created at a device by clipping of the energy tails of the light beams. Such clipping leads to ripples in the far field. These ripples cause the beam to spread over a wider region than is desired. In telecommunications routing this can lead to crosstalk. Other applications may also benefit from apodisation of a clipped laser beam, such as laser machining, for example, where it is desired to process a particular area of a material without other areas being affected and laser scalpels for use in surgery.

Clipping occurs because the energy of the beam spreads over an infinite extent (although the amplitude of the beam tails tends to zero), while any device upon which the beam is incident has a finite width. Clipping manifests itself

as a discontinuity in the beam amplitude at the edges of the device

Referring to Figure 11, two SLMs 100,101 are used for beam steering or routing of beams 1,2 from input fibres 3,4 to output fibres 5,6, as described in PCT GB00/03796. Each SLM 100,101 is divided into a number of blocks of pixels 103a, 104a; 103b, 104b. Each block 103a, 104a is associated with a particular input fibre 3,4 -i.e. the fibre of concern points to the subject block. Each block displays a hologram that applies routing. As previously discussed herein the holograms may also or alternatively provide focus compensation, aberration correction and/or power control and/or sampling, as required.

The blocks 103a, 104a at the input SLM 100 each receive a beam from an associated input fibre 3,4 while the blocks 103b, 104b at the output SLM 101 each direct a beam towards an associated output fibre 5,6. Each block 103a, 103b has a finite width and height. As known to those skilled in the art and as previously noted, the beam width is infinite, therefore the block clips the beam from or to the associated fibre and this creates undesired ripples in the far field.

The ripples due to clipping of the beam 1 are figuratively shown as including a beam 106 which, it will be seen, is incident on the wrong output hologram, displayed on block 104b at the output SLM 101. "Wrong" signifies holograms other than that to which the beam of concern is being routed, for example holograms displayed by blocks around the block to which the beam should be routed.

Some of these ripples will then be coupled into "wrong" output fibres 5,6 -i.e. those to which the beam is not deliberately being routed- leading to crosstalk. It will be clear to those skilled in the art that these effects will be present on blocks other than those adjacent to the "correct" blocks, as the field of beam 1 is infinite in extent.

In any physical system the effect of the ripples created by clipping at the output SLM 101 depends on the optical architecture.

In practice the non-ideal transfer function of the optics (due to finite lens apertures and aberrations) means that a sharp change in the amplitude spreads out and causes crosstalk in adjacent output fibres. In effect the optics applies a limit to the range of spatial frequencies that can be transmitted. This frequency limit causes crosstalk.

The wider the device, compared to the beam spot size at the device, the weaker the ripples in the far field and the lower the crosstalk. In general a parameter C is defined such that the required width of SLM per beam is given by $H=C.\omega$, where ω is the beam spot size at the SLM. The value of C depends on the beam shape, the optical architecture and the allowable crosstalk. Typically for a Gaussian beam, with no beam shaping and aiming for crosstalk levels around -40 dB, C would be selected to have a value greater than or equal to three. Looking at this system from the spatial frequency viewpoint, the field incident on the SLM contains (for perfect optics) all the spatial frequencies in the input beam. The finite device

width cuts off the higher spatial frequencies, so, again, the optics applies a limit to the range of spatial frequencies that can be transmitted and this frequency limit causes crosstalk.

Beam shaping can be used to decrease the crosstalk for a given value of C, and also allow the use of a lower value of C. Calculations for NxN switches have shown that decreasing the value of C leads to more compact optical switches and increases the wavelength range per port. Hence beam shaping can be employed to provide more compact optical switches and/or an increased wavelength range per port.

The idea behind using beam shaping or 'apodisation' to reduce crosstalk is based on an analogy with digital transmission systems. In these systems a sequence of pulses is transmitted through a channel possessing a limited bandwidth. The frequency response of the channel distorts the edges of pulses being transmitted so that the edges may interfere with one another at the digital receiver leading to crosstalk. The channel frequency response can, however, be shaped so as to minimise such crosstalk effects. Filters with responses that have odd-symmetry can be used to make the edges go through a zero at the time instants when pulses are detected.

Therefore beam-shaping with odd symmetry can be used to make the crosstalk go through a zero at the positions of the output fibres. Such a method is likely to be very sensitive to position tolerances.

Another method used in digital systems is to shape the frequency cut-off so that it goes smoothly to zero. In the present context the ideal case of 'smoothly' is that the channel frequency response and all derivatives of the frequency response become zero. In practice it is not possible to make all derivatives go to zero but a system may be designed in which the amplitude and all derivatives up to and including the k'th derivative become zero at the ends of the frequency range. The higher the value of k, the quicker the tails of the pulse decay. Therefore the beam shaping should go as smoothly as possible to zero.

To investigate the effects of beam shaping the amplitude modulation was treated as continuous. The system studied was a single lens 2f system where 2f is the length of the system between fibres and SLM, assuming f is the focal length with fibres in one focal plane, and an SLM in the other focal plane. The input fibre beam was treated as a Gaussian. Various amplitude modulation shapes were applied at the SLM and the coupling efficiency into the output fibre was calculated. In this architecture and from Abbe theory, the incident field at the SLM is proportional to the Fourier Transform of the field leaving the input fibre. In particular, different spatial frequencies in the fibre mode land on different parts of the SLM. Clipping removes the spatial frequencies outside the area of the hologram. Beam shaping at the SLM has the effect of modifying the relative amplitude of the remaining spatial frequencies.

Residual ripples may still remain due to the discontinuity in the beam derivative but the ripples will

be reduced in amplitude and decay more quickly. Further reduction in the ripple amplitude and increase in the rate of decay may be achieved by shaping the beam such that both the amplitude and the first k derivatives go to zero at the edges.

Mathematical analysis of the effect has also been carried out. The results are as follows:

The nth time derivative of a function can be expressed in terms of its Fourier Transform as shown in equation (1):

$$\frac{d^n g(t)}{dt^n} = \int_{-\infty}^{\infty} (i2\pi f)^n G(f) \exp i2\pi f t \, df \qquad (1)$$

Hence, by inversion, the frequency dependence of the Fourier Transform (FT) may be expressed as an FT of any one of the function's derivatives as shown in equation (2):

$$G(f) = \frac{1}{(i2\pi f)^n} \int_{-\infty}^{\infty} \frac{d^n g(t)}{dt^n} \exp -i2\pi f t \, dt \qquad (2)$$

Choosing the zeroth derivative provides the expression in equation (3):

$$G(f) = \int_{-\infty}^{\infty} g(t) \exp -i2\pi f t \, dt \qquad (3)$$

To apply the analysis to free-space beam-steering:-

let x and y be the position co-ordinates at the fibre output from a switch, and u and v be the position co-ordinates at the SLM. Assume the SLM to be in one focal plane of a lens of focal length f, and the fibre array to be in the other focal plane:

$$E_{FIB}(x,y) = \frac{i}{f\lambda} \exp(-i\frac{2\pi}{\lambda}(2f + nt)) \iint E_{SLM}(u,v) \exp i\frac{2\pi f}{\lambda}(xu + yv) du\, dv \qquad (4)$$

such that the output field (see equation (4)) is a 2-D Fourier Transform of the field at the SLM, E_{SLM}. In this

result t is the lens thickness and N its refractive index, while λ is the optical wavelength.

For the present purposes the 1-D equivalent is considered (relation 5):

$$E_{FIB}(x) = \frac{i}{f\lambda}\exp(-i\frac{2\pi}{\lambda}(2f+nt))\int E_{SLM}(u)\exp i\frac{2\pi f}{\lambda}(xu)du \qquad (5)$$

Comparing with (3) it is clear that the position co-ordinate at the SLM (u) is equivalent to the time domain and the position co-ordinate at the output (x) is equivalent to the frequency domain. Hence from (2) the output field may be expressed in terms of a derivative of the field at the SLM, as shown in equation (6):

$$E_{FIB}(x) = \frac{i}{f\lambda}\exp(-i\frac{2\pi}{\lambda}(2f+nt))\left(\frac{i}{2\pi x}\right)^n\int\frac{d^nE_{SLM}(u)}{du^n}\exp i\frac{2\pi f}{\lambda}(xu)du \qquad (6)$$

Let the kth derivative of $E_{SLM}(u)$ be non-zero and smoothly varying over the range [-H/2, H/2], but zero outside this range, such that the derivative changes discontinuously at u = ±H/2, as defined in (7):

$$\begin{aligned}\frac{d^kE_{SLM}(u)}{du^k} &= 0 && \forall u: u < -\tfrac{H}{2}\\ &= g^H && u = -\tfrac{H}{2}\\ &= s(u) + g^H && -\tfrac{H}{2} < u < \tfrac{H}{2}\\ &= g^H && u = +\tfrac{H}{2}\\ &= 0 && u > \tfrac{H}{2}\end{aligned} \qquad (7)$$

This representation assumes E_{SLM} to be even in u. Physically this situation represents a beam that is perfectly aligned with respect to the centre of a hologram of width H.

This derivative may be expressed as the sum of a rect function and a smoothly varying function, s(u), that is zero at and outside |u|=H/2, as shown in equation (8):

$$\frac{d^k E_{SLM}(u)}{du^k} \equiv g_H rect\left(\frac{u}{H}\right) + s(u) \qquad (8)$$

For example consider a clipped (and unapodised) Gaussian beam; the zeroth derivative (k=0) may be expressed as shown in equations (9) and (10):

$$s(u) = \exp-\left(\frac{u}{\omega_{HOL}}\right)^2 - \exp-\left(\frac{H}{2\omega_{HOL}}\right)^2 \quad \forall |u| < \frac{H}{2} \qquad (9)$$
$$= 0 \quad \forall |u| \geq \frac{H}{2}$$

$$g_H = \exp-\left(\frac{H}{2\omega_{HOL}}\right)^2 \qquad (10)$$

Now returning to the general case (equation(8)) the $k+1^{th}$ derivative is calculated to be as shown in equation (11):

$$\frac{d^{k+1} E_{SLM}(u)}{du^{k+1}} \equiv g_H \left\{\delta\left(u+\frac{H}{2}\right) - \delta\left(u-\frac{H}{2}\right)\right\} + \frac{ds(u)}{du} \qquad (11)$$

It is now convenient to calculate the output field. Set $n=k+1$ in (6) to obtain equation (12):

$$E_{FIB}(x) \propto \frac{1}{(j2\pi x)^{k+1}} \left\{ \begin{array}{l} g_H \int_{-\infty}^{\infty} (\delta(u+H/2) - \delta(u-H/2)) \exp- j2\pi x u \, du \\ + \int_{-\infty}^{\infty} \frac{ds(u)}{du} \exp- j2\pi x u \, du \end{array} \right\} \qquad (12)$$

which becomes equation (13):

$$E_{FIB}(x) \propto \frac{1}{(j2\pi x)^{k+1}} \left\{ 2j g_H \sin(\pi x H) + \int_{\frac{H}{2}}^{\frac{H}{2}} \frac{ds(u)}{du} \exp- j2\pi x u \, du \right\} \qquad (13)$$

As the position is increased, the exponential term in the 2nd integral of (13) oscillates more and more rapidly. Eventually the spatial frequency is so high that the derivative of s(u) can be considered to be constant, or nearly constant, over the spatial period. In which case the integral is zero, or nearly zero, when evaluated over each period of the oscillation. Therefore at high frequencies the whole of the second integral must approach zero.

It is assumed that the behaviour is dominated by the first integral. The first integral shows that if the amplitude changes discontinuously ($k=0$, i.e. an unapodised hologram), the spectrum (E_{FIB}) decays as 1/x. Now, if the amplitude and the first derivative are continuous, it is the second derivative that changes discontinuously, and so $k=2$ and the spectrum (E_{FIB}) decays as $1/x^3$. Numerical simulations have been carried out to confirm this behaviour.

A particularly advantageous shape is one in which the shaped beam has odd symmetry about points midway between the centre and the edges such that the beam amplitude and all of its derivatives go to zero at the beam edges.

The beam shaping may be effected to remove only a small amount of power from the central portion of the beam, to maintain acceptable system efficiency. A method for shaping a beam to achieve suppression of the ripples is now described.

Defining the middle of the beam as $f(u)$, then $f(u)$ can describe the original beam in its central portion, or what is left in the original beam after it has already been partially shaped, using, for example, pseudo-amplitude. To avoid ripples in the far field the edges of the beam go to zero at $u = \pm H/2$, where H is the width of the hologram.

Hence, at the right-hand edge, describe the beam as in equation (14):

$$f_R(u) = f(0) - f(u-H/2) \quad (14)$$

(The left-hand edge is considered later).

To get matching of the amplitude half-way between the middle and the edge it is required that condition (15) should be valid:

$$f(H/4)=f_R(H/4) \quad (15)$$

From which there is obtained equation (16):

$$f(H/4)+f(-H/4)= f(0) \quad (16)$$

Now consider the derivatives at the joining point. The nth derivative of the right-hand edge function is given by equation (17):

$$\left.\frac{d^n f_{RH}}{du^n}\right|_{u=U} = \left.\frac{d^n f}{du^n}\right|_{u=U-H/2} \quad (17)$$

Hence at the joining point condition (18) is valid:

$$\left.\frac{d^n f_{RHEDGE}}{du^n}\right|_{u=H/4} = \left.\frac{d^n f}{du^n}\right|_{u=-H/4} \quad (18)$$

In order to avoid the creation of high frequency effects (crosstalk tails) by the joining point all derivatives are desirably continuous here. Hence it is required that condition (19) should be true:

$$\left.\frac{d^n f}{du^n}\right|_{u=H/4} = \left.\frac{d^n f}{du^n}\right|_{u=-H/4} \qquad (19)$$

To find out whether this is possible, expand the function f in a Taylor series about $x=0$ to obtain equation (20):

$$f = f(0) + a_1 u + a_2 u^2 + a_3 u^3 + a_4 u^4 + a_5 u^5 + a_6 u^6 + \ldots\ldots\ldots \qquad (20)$$

The first derivative is given by equation (21):

$$\frac{df}{du} = a_1 + 2a_2 u + 3a_3 u^2 + 4a_4 u^3 + \ldots\ldots \qquad (21)$$

The required condition (19) for the first derivative ($n=1$) can be obtained provided f is even in x, so that all the odd coefficients $\{a_1, a_3..\}$ in (20) and (21) are zero. This makes the first derivative continuous at the joining point. Furthermore if f is an even function then $f(H/4)=f(-H/4)$ in which case (16) becomes (22):

$$f(H/4) = \tfrac{1}{2} f(0) \qquad (22)$$

Given that f is now an even function, the second derivative of f is given by equation (23):

$$\frac{d^2 f}{du^2} = 2a_2 + 12a_4 u^2 + \ldots\ldots \qquad (23)$$

Returning to the required condition in (19) it is clear that it cannot be satisfied for $n=2$. Hence the

second derivative is discontinuous at the joining point $u=H/4$.

The left-hand edge is given by equation (24)

$$f_{LH}(u) = f(0) - f(u+H/2) \quad (24)$$

Given that f is even, the overall function has odd symmetry in each half plane about $x = \pm H/4$.

To work out what happens at $u= \pm H/2$, expand f_{RH} and f_{LH} in Taylor series, as shown in equations 25 and 26:

$$f_{RH} = a_2\left(u-\tfrac{H}{2}\right)^2 + a_4\left(u-\tfrac{H}{2}\right)^4 + a_6\left(u-\tfrac{H}{2}\right)^6 + \ldots\ldots \quad (25)$$

$$f_{LH} = a_2\left(u+\tfrac{H}{2}\right)^2 + a_4\left(u+\tfrac{H}{2}\right)^4 + a_6\left(u+\tfrac{H}{2}\right)^6 + \ldots\ldots \quad (26)$$

The function and its first derivative are both zero at $u= \frac{1}{2}H$, but the second derivative has the value $2a_2$. Outside of the range $[-\frac{1}{2}H, \frac{1}{2}H]$ the beam drops to zero. Hence the second derivative is discontinuous at both $u=\pm\frac{1}{2}H$ and $u=\pm H/4$, and the far field must therefore decay as the cube of the distance measured in the far field.

From the analysis, the required properties of $f(u)$ for a hologram of width H are that firstly it should be even in u, and that secondly its amplitude at the position $u=H/4$ should be half the amplitude at $u=0$. After apodisation has been applied the shape of the beam in the region between $u=H/4$ and $u=H/2$ should be given by $f_{RH}(u) = f(0) - f(u-H/2)$ while in the region between $u=-H/2$ and $u=-H/4$ the shape of the beam should be given by $f_{LH}(u) = f(0) - f(u+H/2)$. In practice the shaping may not increase the local beam

amplitude. Hence the hologram width and/or the shape of the central portion may have to be adjusted to avoid the requirement for 'amplifying' shaping.

As an example these conditions are satisfied by a Gaussian distribution given by equation 27:

$$f(u) = \exp -\left(\frac{u\sqrt{\ln(2)}}{H/4}\right)^2 \qquad (27)$$

If the original beam satisfies the first two conditions it can be apodised without removing power from the central region. Otherwise shaping can be applied to the central region so that these two conditions are satisfied.

In some systems there may be a requirement to adapt the width of the beam in the far field: either to narrow the beam or to broaden the beam. This may be useful for laser processing of materials as well as for routing. It is advantageous that the method to change the width does not introduce side lobes. A particular application that would benefit is laser drilling of holes. The SLM could be used to narrow the drilling beam as well as to change its focus so that the drilled hole remains of uniform diameter (or has reduced diameter variation) as the hole is progressively bored.

In order to broaden the far field, the near field (at the SLM) needs to be made narrower. This may be implemented by applying shaping to the central portion of the beam so that its full width half maximum (FWHM) points become closer together and so that the beam shape has even symmetry about its centre. Preferably the amplitude at the

very peak is not reduced so as not to lose too much power. The distance between the two FWHM points defines the effective half-width of the hologram. Further shaping should be applied to the left-hand and right-hand edges of this effective hologram, so that the beam shape has the required properties as described previously. Outside of the width of the effective hologram the beam shape should have zero amplitude.

To narrow the far field, the near field (at the SLM) needs to be made broader. This may be implemented by applying shaping to the central portion of the beam, so that the FWHM points become further apart, and so that the beam shape has even symmetry about its centre. Typically this will require reduction of the amplitude around its peak. The extent of this reduction is governed by the need to be able to apply shaping to the right and left hand edges of the hologram with the constraint that the shaping may only decrease the amplitude (and not increase it).

Amplitude-modulating SLMs can be used to implement the shaping but they are polarisation-dependent.

Another pseudo-amplitude modulation can be created to implement the beam shaping by using a phase-modulating SLM, which may be made polarisation-independent. This may be achieved by recognising that a phase modulation exp j $\phi(u)$, where j is the complex operator, is equivalent to a phase modulation cos $\phi(u)$ + j sin $\phi(u)$. Now choose $\phi(u)$ such that the modulus of $\phi(u)$ is varying slowly but the sign is oscillating.

Hence the real part of the modulation, cos $\phi(u)$, will be slowly varying and can act as the amplitude modulator to create the beam shape, while the imaginary part of the modulation, $\pm \sin \phi(u)$, will be oscillating rapidly with an equivalent period of two or more pixels. Hence the energy stripped off by the effective amplitude modulator will be diffracted into a set of beams that are beam-steered out of the system at large angles.

In a preferred embodiment, the system is designed such that light travelling at such angles will either not reach the output plane or will land outside the region defined by the output ports. Therefore the beam component shaped by $\sin \phi(u)$ is rejected by the optical system, while the beam component shaped by $\cos \phi(u)$ is accepted by the system and couples into one or more output ports, as required. While this explanation is for a one-dimensional phase modulator array the same principle is applicable in 2-D. If $\phi(u)$ varies from 0 at the centre of the beam to $\pi/2$ at the edges then the amplitude of the beam shaped by $\cos \phi(u)$ varies from 1 at the centre of the beam to 0 at the edges, thus removing the amplitude discontinuity that creates rippling tails in the far field. This can be achieved with minimal change to the insertion loss of the beam as it passes through the system. Indeed, often the insertion loss due to clipping is due to interference from the amplitude discontinuity, rather than the loss of energy from the beam tails.

The beam-shaping hologram is non-periodic but oscillatory and may be applied as a combination with other

routing and/or lens synthesis and/or aberration correcting and/or power control and/or sampling holograms.

Further advantages of the beam shaping are that it reduces the required value of C for a given required crosstalk, allowing more compact optical switches. Another advantage is that the crosstalk decays much more rapidly with distance away from the target output fibre. Hence, essentially, the output fibres receive crosstalk only from their nearest neighbour fibres.

Therefore in a large optical switch used as a shared NxN switch for a range of wavelengths, it should be possible to arrange the wavelength channel allocation such that no output fibre collects crosstalk from a channel at the same system wavelength as the channel it is supposed to be collecting. This would reduce significantly the homodyne beat noise accumulation in networks using such switches, and, conversely, allow an increase in the allowed crosstalk in each switch as heterodyne crosstalk has much less of an impact at the receiver, and can also be filtered out if necessary.

The crosstalk suppression method uses beam shaping to suppress ripples in the beam tails. The same method can be adapted to change the beam shape around the beam centre. For the case when the output beam is an image of the beam at the SLM the beam shaping is working directly on an image of the output beam. The fraction of the initial beam that is shaped by the slowly varying function cos $\phi(u)$ can have the correct symmetry to couple efficiently into the fundamental mode of the output fibre. The fraction of the

initial beam that is shaped by the rapidly varying function $\pm \sin \phi(u)$ has the wrong symmetry to couple into the fundamental mode and can be adjusted to be at least partially orthogonal to the fundamental mode.

Effectively, it is the fraction of the beam shaped by $\cos \phi(u)$ that dominates the coupling efficiency into the fundamental mode. Therefore the dependence of the coupling efficiency vs. transverse offset is dominated by the overlap integral between the $\cos \phi(u)$ shaped beam and the fibre fundamental mode.

When the incident beam is the same shape as the fundamental mode and for small transverse offsets the coupling efficiency decreases approximately parabolically with transverse offset. In many beam-steering systems using phase-modulating SLMs the transverse offset at the output fibre increases linearly with the wavelength difference from the design wavelength. Consequently the system coupling efficiency decreases approximately parabolically with wavelength difference from the design wavelength. Beam shaping can be used to adjust the shape of the incident beam and optimised to flatten the dependence on transverse offset and hence to flatten the wavelength response. Alternatively a more complex wavelength dependence could be synthesised to compensate for other wavelength-dependent effects.

Beam shaping may also be used during system assembly, training or operation in order to measure mathematical moments of a light beam. A description of the method and

theory will be followed by a description of some example applications.

The method requires a first stage during which corrective phase modulation is applied by the SLM such that the phase profile of the beam leaving the SLM has no non-linear component. This may be confirmed with a collimeter or wavefront sensor or some other suitable device. In a first embodiment the phase profile has no linear component applied to deflect the beam such that the beam is reflected in a specular direction. An optical receiver is placed to receive the reflected beam. The power reflected exactly into the specular direction is proportional to the square of an integral A(n) given in equation (28) where f(n,u,v) is the complex amplitude of the beam leaving the SLM at co-ordinates u,v during the nth stage of the method.

$$A(n) = \iint f(n,u,v)\,du\,dv \qquad (28)$$

The optical power received by the photodiode during the nth stage of the method is given by equation (29).

$$P(n) = K(A(n))^2 \qquad (29)$$

where K is a constant of proportionality.

If received by an optical fibre the received power will be modified according to the fibre misalignment and mode field distribution, leading to possible ambiguities in the method. Hence it is preferred instead to receive the beam by a photodiode. During the first stage of the method the net phase modulation applied by the SLM is such that the beam is of uniform phase. Let b(u,v) be the beam amplitude distribution. Therefore during this first stage

the integral A is equal to the zeroth moment, a0, of the beam amplitude distribution, as shown in equation (30), and f(n,u,v) is equal to b(u,v).

$$A(1) = a0 = \iint b(u,v)\,du\,dv \qquad (30)$$

Therefore the power, P(1), measured by the photodiode during this first stage is given by equation (31).

$$P(1) = Ka_0^{\,2} \qquad (31)$$

In order to characterise a two-dimensional beam, moments of the beam distribution may be taken in two orthogonal directions, in this case the u and v directions. Consider the pixel block of concern to be broken up into a set of columns. To each column in the block a particular effective amplitude modulation may be applied using the pseudo-amplitude method or some other method. For example consider the pixel column with a centre at co-ordinate u*. By applying an alternating phase modulation of $+\phi(u^*)$ and $-\phi(u^*)$ to adjacent pixels in the same column the effective amplitude modulation applied to the particular column is $\cos(\phi(u^*))$.

In order to calculate the first moment in the u direction, during the second stage of the method the values of $\cos(\phi(u^*))$ are chosen such as to approximate to a linear distribution, as described in equation (32).

$$\cos(\phi(u^*)) \approx mu^* + c \qquad (32)$$

Therefore the power P(2) measured during the second stage of the process is given by (33).

$$P(2) \approx K\left(m^2 a_{1U}^{\,2} + 2mca_{1U}a_0 + c^2 a_0^{\,2}\right) \qquad (33)$$

where a1u is the first moment of the beam distribution in the u direction, as given by (34).

$$a1u = \iint ub(u,v)\,du\,dv \qquad (34)$$

The ratio of the powers measured during the two stages is then given by equation (35)

$$\frac{P(2)}{P(0)} \approx m^2\left(\frac{a_{1U}}{a_0}\right)^2 + 2mc\frac{a_{1U}}{a_0} + c^2 \qquad (35)$$

Given the measured power ratio and the values of m and c as chosen to satisfy the constraints of the method, the quadratic equation given in (35) may be solved to calculate the ratio of the first order moment in the u direction to the zeroth order moment.

The constraints on m and c are such that the actual values of the alternating phase of each column need to be chosen from the available set and such that the total phase excursion across the expected area of the beam remains within the range $[0,\pi]$ or $[-\pi,0]$ so that the $\cos(\phi(u^*))$ term may decrease (or increase) monotonically. In practise a photodiode of finite size will receive power diffracted from the SLM within an angular distribution about the specular direction. A further constraint on the gradient 'm' in equation (32) is such that the side lobes created by the linear amplitude modulation fall outside the area of the photodiode.

Similar methods may be used to take approximate higher-order moments in the u direction, and also first and higher-order moments in the v direction. In the latter

case to each row in the block a particular effective amplitude modulation is applied, e.g. by setting adjacent pixels in the row to alternating phases of $+\phi(v^*)$ and $-\phi(v^*)$, where v^* is the position co-ordinate of the row. The second-order moments may also be calculated and used to estimate the beam spot size at the hologram. This estimate can be used as part of the control algorithm for focus adjustment.

In a second embodiment a further linear phase modulation is applied to the hologram during each stage so as to deflect the beam to be measured while taking the moments towards a particular photodiode.

Consider a Gaussian type beam b(u,v) centred at position co-ordinates (u0,v0). The even symmetry of the beam about axes parallel to the u and v directions and through the centre lead to the identities given by equations (36) and (37).

$$\iint (u-u0)b(u,v)\,du\,dv = 0 \qquad (36)$$

$$\iint (v-v0)b(u,v)\,du\,dv = 0 \qquad (37)$$

Hence approximate values of the first order moments measured as described previously, or by some other method, may be used to deduce approximate positions for the beam centres, as shown by equations (38) and (39).

$$u_0 \approx \frac{a_{1U}}{a_0} \qquad (38)$$

$$v_0 \approx \frac{a_{1V}}{a_0} \qquad (39)$$

In the next stage of the measurement the pixel block initially assigned to the beam is re-assigned such that it is centred within half a pixel in each of the u and v directions from the approximate centre of the beam, as just calculated.

Let the new centre of the pixel block be at (u1,v1). A new hologram should be calculated such that the beam leaving the SLM acts as the product of a beam of uniform phase distribution and an effective amplitude distribution given by equation (40).

$$\cos(\phi(u^*)) \approx m(u^* - u1) \qquad (40)$$

The principle is that if the beam centre lies exactly at u1 the measured power exactly in the specular direction will be zero. Taking into account the finite area of the photodiode the measured power cannot be zero but will be minimised when u1 is within half a pixel pitch of the beam centre.

This new hologram should be applied to the pixel block and the power measured. At this point the method can proceed in two ways.

In one embodiment a further estimate of the beam centre can be calculated, as described previously, a new centre position u1 calculated, the hologram recalculated according to equation (40) and the power measured again. This process can be repeated until the value of u1 appears to have converged.

In a second embodiment the centre of the pixel block, u1 can be re-assigned, the hologram recalculated according to (40) and the power measured again. At the current pixel block centre, u1, for which the beam centre is within half a pixel of u1, the measured power should be at a minimum value.

A further embodiment is to use a suitable combination of these two alternative methods.

The centre of the pixel block in the v direction can be measured using similar methods.

The size of the pixel block used should be chosen so as to cover the expected area of the beam. Outside of this area the phase can be modulated on a checkerboard of, for example, $\pm pi/2$, so that the effective amplitude modulation is zero and the light from these regions is diffracted far away from the photodiode.

It can be shown that equations (36) and (37) are also satisfied if the beam waist is not coincident with the SLM, that is the beam is defocused. Although the method as described above will not be calculating the proper moments of the beam, it can be shown that the position of the beam centre may still be identified using the methods described.

The beam shaping method may be extended to control and adapt the amplitude of the beam steered through the system. If $\phi(u)$ varies from ψ at the centre of the beam to $\pi/2$ at the edges then the real part of the pseudo-amplitude modulation can be considered as cos ψ multiplied by an

ideal beam-shaping function that causes insignificant insertion loss. In which case there is an associated additional insertion loss given by approximately $10\log_{10}(\cos^2 \psi)$. By varying the value of ψ the beam power can be varied. Therefore the same device can be used to achieve power control, otherwise known as channel equalisation, as well as changing the routing or direction of a beam. Deliberate changes in the beam shaping function can be used to increase the number of 'grey levels' possible for the beam attenuation, i.e. to provide an increased resolution. As for the beam shaping, the rejected power is diffracted out of the system. Therefore this attenuation method does not increase crosstalk.

Another technique for controlling beam power without increasing crosstalk is to deflect the unwanted energy in a direction orthogonal to the fibres susceptible to crosstalk.

This may be combined with yet another technique, namely distorting the beam phase in such a way that much of the energy couples in to the higher-order modes of the fibre, rather than the fundamental mode that carries the signal. The beam phase distortion may alternatively be used alone.

In an embodiment, these methods are achieved by dividing the area of the SLM on which the beam is incident into a set of 'power controlling' stripes. The long side of the stripes are at least substantially in the plane in which the input and output beam are travelling. By varying the relative phase in the stripes the coupling efficiency

into the fundamental mode of the output fibre is changed, and hence the throughput efficiency of the optical system is set. This method can be applied to a pixellated device that is also routing or otherwise adapting a beam. In this case each 'stripe' would contain between one and many of the pixels already in use.

Alternatively the long side of the power controlling stripes could be in one plane in one electrode, with the long side of the routing pixels in an orthogonal direction in the other electrode, of which either the stripe electrodes, or the pixellated electrodes, or both, are transparent.

Alternatively the device acts solely as a beam power controller, or channel equaliser. In this case each stripe could be a single pixel. The set of stripes for each beam defines a block. Many blocks could be placed side by side to form a row of blocks, with each block in the row providing channel equalisation for a different beam. Many rows could also be provided so as to provide channel equalisation for signals coming in on different input fibres.

If a pair of confocal focusing elements is disposed between the output fibre and SLM then the output fibre receives an image of the field at the SLM. In this case the attenuation at the output fibre is governed by the orthogonality between the image and the fundamental mode of the fibre. Assuming, and without loss of generality, that a perfect image is formed such that sharp phase discontinuities are preserved, it may be shown that the

coupling efficiency into the fundamental mode is proportional to the square of a sum of weighted integrals. The weight is the modulation exp iϕ applied by a stripe, and the associated integral is over the area onto which that stripe is imaged. The integrand is positive and depends on the square of the local electric field associated with the fundamental mode. Each integral is represented as a phasor, with a length depending on how much of the fundamental mode power passes through the region onto which the stripe is imaged, and a phasor angle depending on the phase modulation. The net coupling efficiency is given by the magnitude of the vector summation of the individual phasors associated with each stripe. For simple devices it may be advantageous to use as few stripes as possible as this reduces any losses due to dead space between the stripes and reduces the control complexity. With only two stripes of approximately equal area (and hence two phasors of approximately equal length) the possible vector sums lie on a semicircle and hence the number of possible grey levels is equal to the number of phase levels between 0 and pi, which may not be sufficient. Transverse offset of the output fibre with respect to the centre of the image has the effect of making the two phasors unequal and hence complete extinction is not possible. These problems may be overcome by using three or more stripes per hologram. For example with three stripes the loci of vector sums lie on circles centred about the semicircle taking just two of the stripes into consideration. Hence many more values are possible. Increasing the number of stripes increases the number of grey levels and the depth of attenuation.

A fibre spool is used on the output fibre before any splices are encountered. It will clear to those skilled in the art that other mode stripping devices or techniques could be used instead.

This system can also be adaptive: given knowledge of the applied phase by each stripe and enough measurements of the coupling efficiency, the lengths of the different phasors associated with each stripe can be calculated. Given these lengths the performance can be predicted for any other applied phases. Hence suitable algorithms can be included in the SLM or interface to train and adapt the device performance to cater for transverse offset of the output fibre and other misalignments.

Sharp edges or phase discontinuities in this image will be eroded by the optical modulation transfer function (MTF) but, nevertheless, where a sufficient number of stripes is provided it is possible to vary the phase modulation of each and achieve a wide range of attenuation.

Ultimately what limits the depth of attenuation is the residual zero-order due to, for example, an imperfect quarter-wave plate or Fresnel reflections from different surfaces inside the SLM such that the reflected light has not yet been phase-modulated. An example reflection is from the interface between the cover glass and transparent electrode. Such residual zero orders will couple into the output fibre independently of the phase modulation. In many cases the residual zero order will have a different polarisation state to the beam that has been properly

processed by the phase modulation, so even adapting the phase modulation will not recover the depth of attenuation.

In such cases it is advantageous to apply some routing to the output fibre, such that the zero order is offset from the output fibre and the intended output beam is steered into a diffraction order of the routing hologram. For a many-pixellated SLM this may be achieved using the standard routing algorithm described earlier. For a simple SLM with few pixels, e.g. the one with the stripes in the plane of the input and output fibres, these stripes can be subdivided in an orthogonal direction, that is to create a 2-D array of pixels. This however increases the device complexity.

An alternative simple device is to combine it with a tip-tilt beam-steering element, as described in Optics Letters, Vol. 19, No 15, Aug 1, 1994 "Liquid Crystal Prisms For Tip-Tilt Adaptive Optics" G D Love et al. In this case the top 'common electrode' is divided into a set of top electrodes, one for each device, where each device is assumed to receive a separate beam or set of beams. Each top electrode has different voltages applied on two opposite sides. The shape of the top electrode is such that the voltage between the electrodes varies nonlinearly in such a way as to compensate for the non-linearity of the phase vs. applied volts characteristic of the liquid crystal. Hence with all the stripe electrodes at the same voltage the device provides a linear phase ramp acting like a prism and deflecting the phase-modulated beam in a pre-defined direction, such that the residual zero order falls elsewhere, as required. Changing the stripe electrode

voltage causes phase changes in the imaged beam but does not prevent the deflection. Small adjustments in the phase ramp can be used to compensate for component misalignments and/or curvature of the SLM substrate and/or wavelength difference from the design wavelength for the tip-tilt device. Such small adjustments in the phase ramp can also be used to achieve fine control over the attenuation. Hence such a device would be useful whether or not the required attenuation is sufficiently strong for the residual zero order to become a problem. Alternatively the top electrode can be divided into two or more areas, with the shape of each so as to compensate for the phase vs. volts non-linearity. Varying the voltage on the ends of each electrode can be used to offset the phase modulation of each stripe in order to create the desired attenuation. In this case the aluminium electrode would be common to the device, removing dead-space effects.

In another embodiment of the tip-tilt device, the top electrode is common to all devices and a shaped transparent electrode is provided, e.g. by deposition, on top of the quarter-wave plate, with connections to the SLM circuitry to either side of the device. In this case the aluminium may act only as a mirror and not as an electrode. Again the shaped transparent electrode may be subdivided into two or more areas to provide the attenuation. This embodiment avoids dead-space effects and also a voltage drop across the quarter-wave plate.

In a further embodiment, such a tip-tilt device has a shaped transparent electrode on both cover glass and quarter-wave plate. The planes of tip-tilt for the two

devices may be orthogonal or parallel. With two parallel tip-tilt electrodes the device may act as a power-controlling two-way switch, and also, as will be described later, can be used in a multi-channel add/drop multiplexer. With two orthogonal tip-tilt electrodes the device can beam steer in 2-dimensions such as to correct for positional errors. Either of the two tip-tilt electrodes can be subdivided so as to provide attenuation.

One advantageous SLM is that described in our co-pending patent application EP1053501.

If there is a single focusing element between the output fibre and SLM then the field at the output fibre is the Fourier Transform of the field leaving the SLM. In this case three classes of phase modulation can be used to change the coupling efficiency into the output fibre. The first two classes assume a many-pixellated SLM while the third class assumes a few-pixel SLM with or without tip-tilt features as described earlier. In the third class the tip-tilt feature may be used to compensate for transverse positional errors in the input and output fibre.

The different classes of phase modulation result in a variable coupling efficiency at the output fibres using the following methods:

As noted above, the first class uses a many-pixellated SLM. A periodic phase modulation is applied that creates a set of closely spaced diffraction orders at the output fibre. The spacing is comparable to the fibre mode spot size such that there is significant interference between

the tails of adjacent diffraction orders. The phases of these diffraction orders are chosen such that the resulting superposition is rapidly alternating in phase and therefore couples into the higher-order fibre modes. Varying the strength, phase and position of each diffraction order changes the attenuation. If the long sides of the stripes used to create this alternating output field are in the plane of the input and output fibres, then diffraction orders landing outside the target optical fibre fall along a line orthogonal to the output fibre array, and therefore do not cause crosstalk.

In the second class, again using a many-pixellated SLM, a non-periodic smoothly varying non-linear phase modulation is applied at the SLM, in this case the SLM acts as a diffractive lens such that the beam is defocused and couples into higher-order modes.

In the third class, which uses a simple SLM with few pixels, the pixels are used to apply phase distortion across the beam incident on the SLM. Such phase modulation can be considered to be equivalent to the first class but with a long period. The phase distortion at the SLM results in amplitude and phase distortion in the reflected beam and hence reduces the coupling efficiency into the output fibre.

Again, all three methods require use of a mode stripper on the output fibre. Again suitable algorithms can be included in the SLM or interface to train the system.

Another embodiment, not illustrated, uses a graded-index (GRIN) lens secured to one face of an SLM, and having input and output fibres directed on or attached to the opposite face. The SLM may provide selective attenuation, and/or may selectively route between respective input fibres and selected output fibres. A requirement for stable performance is fundamental for optical devices used in communications and like fields. One of the dominant manufacturing costs for such optical devices is device packaging. The GRIN lens architecture results in a compact packaged device resilient to vibrations. However, the architecture can have problems with spherical aberration and problems in achieving the required alignment accuracy. In particular there is often a requirement for precise transverse positioning of the fibres. Also due to manufacturing tolerances in the GRIN lens the focused spot in the reflected beam can be offset significantly in the longitudinal direction from the end face of the output fibre, resulting in an insertion loss penalty. This problem gets worse the longer the GRIN lens. Applying selected non-linear phase modulation to the SLM may compensate for problems such as focus errors, length errors, longitudinal positional errors and spherical aberration. Applying selected linear phase modulation to the SLM and/or using tip-tilt electrodes may compensate for problems such as transverse positional errors.

Optical systems using SLMs may individually process the channels from an ensemble of channels on different wavelengths, entering the system as a multiplex of signals in a common beam. Given a continuous array of pixels the SLM may also process noise between the channels. Hence the

optical system acts as a multiwavelength optical processor. The processing may include measurement of the characteristics of the signals and accompanying noise as well as routing, filtering and attenuation.

In a first application, the SLMs carry out attenuation, known in this context as channel equalisation. A second application is a channel controller. A third application is an optical monitor. A fourth application is an optical test set. A fifth application is add/drop multiplexing. Further applications are reconfigurable wavelength demultiplexers and finally modular routing nodes. In all of these applications the SLMs may carry out routing and/or power control and/or beam shaping and/or sampling and/or corrective functions as described earlier. The system to be described is not restricted to this set of seven applications but is a general multi-wavelength system architecture for distributing the wavelength spectrum from one or more inputs across an array of devices and recombining the processed spectrum onto one or more selected outputs.

The inputs and outputs may be to and from optical networking equipment such as transmission systems, transmitter line cards and receiver line cards. Alternatively the inputs may be from one or more local optical sources used as part of a test set: either via an intermediate optical fibre or emitting directly into the optical system. The outputs may be to one or more local photo detectors for use in testing and monitoring. Applications outside the field of communications are also possible such as spectroscopy.

Such multi-wavelength architectures can be adaptations of optical architectures used for wavelength de-multiplexing. Wavelength demultiplexers typically have a single input port and many output ports. These can use one or more blazed diffraction gratings: either in free-space or in integrated form such as an AWG (Arrayed Waveguide Grating). These devices are reciprocal and hence work in reverse. Hence if a signal of the appropriate wavelength is injected into the output port it will emerge from the input port. The output port usually consists of an optical waveguide or fibre with an accepting end that receives a focused beam from the optical system and a delivery end providing an external connection. Now consider replacing the acceptance end of the output waveguide/fibre with a reflective SLM: all of the processed signals reflected straight back will couple into the input fibre and emerge from the input port. These signals can be separated from the input signal with a circulator. Alternatively the system is adapted so that the reflected signals emerge and are collected together into a different fibre.

Free-space optical systems performing wavelength de-multiplexing can use diffraction gratings made by ruling, or from a master, or made holographically, or by etching. Usually these work in reflection but some can work in transmission. One or two gratings can be used in the system. The optics used to focus the beams can be based on refractive elements such as lenses or reflective elements such as mirrors or a combination of the two.

Referring to Figure 12, a channel equaliser 350 has a single grating 300 used with a refractive focusing element

310 and an SLM 320. To make the diagram clearer, the grating 300 is drawn as working in transmission. Other embodiments use two gratings and/or reflective focusing elements and/or gratings that work in reflection, such as blazed gratings.

A first input beam 301 from an input port 304 contains an ensemble of channels at different wavelengths entering the equaliser on the same input port 304. As a result of the grating 300 the beam 301 is split into separate beams 301a, 301b, 301c for each wavelength channel, each travelling in a different direction governed by the grating equation. The grating 300 is positioned in the input focal plane of a main routing lens 310 with a reflective SLM 320 at the output focal plane of the routing lens 310. If desired, there may also be a field-flattening lens just in front of the SLM 320.

If lens 310 were an ideal lens, rays passing through the same point on the focal plane of the lens, regardless of direction provided they are incident on the lens, emerge mutually parallel from the lens. As lens 310 is not a real lens, this is no longer strictly true: however well-known lens design techniques can be applied to make it true over the required spatial window.

Hence, the beams 301a, 301b, 301c that were incident upon the lens 310 from the same point on the focal plane, but at different angular orientations, emerge mutually parallel from the routing lens 310, but spatially separate. Thus, the lens refracts each beam to a different transverse position 320a, 320b, 320c on the SLM 320. At each position

the SLM 320 displays a pixellated hologram and/or has a tip-tilt device for processing the relevant wavelength component of the beam. In the preferred embodiment, the SLM 320 is a continuous pixel array of phase-modulating elements and is polarisation independent. The width of each hologram or tip/tilt device compared to the spot size of the incident beam incident is sufficient to avoid clipping effects. Instead, or additionally, beam shaping may be used. The device may be controlled to deflect or attenuate the beam as described earlier, and provides output processed beams 302a, 302b, 302c. Beams 302a and 302b have moderate channel equalisation applied by a power control hologram and routing towards the output port 305 applied by a routing hologram. As explained previously it is advantageous to use a routing hologram as it deflects the beams from their specular output direction and hence increases the available depth of attenuation. Beam 302c has strong attenuation applied in order to "block" the channel: this is achieved by selecting holograms that direct the light well away from the output port 305 towards, for example, an optical absorber 306. The processed beams are reflected back from the SLM 320 towards the main lens 310 and then refracted back by the main lens towards the diffraction grating 300. Assuming the SLM 320 is flat, all beams subjected to the same deflection at the SLM 320 and entering the system in the same common input beam emerge mutually parallel from the diffraction grating. Curvature of the SLM 320 is compensated by small changes in the deflection angle achieved due to the holograms displayed on the SLM 320. As the light beams 302a, 302b emerge parallel from the SLM 320 they are refracted by the lens 310 to beams 303a, 303b propagating towards a common

point in the grating 300, which (having the same grating equation across the whole area of concern) diffracts the beams to provide a single output beam 302. Note that due to the action of the lens, beam 303a is parallel (but in the opposite direction) to beam 301a and beam 303b is parallel (but in the opposite direction) to beam 301b. Therefore all beams subjected to the same eventual output angle from the SLM 320 are collected into the same output port 305. Hence a system may be constructed with a single input port 304 and a single output port 305 that produces independent attenuation or level equalisation for each wavelength channel. Note that to obtain the same deflection angle for all wavelength channels, as required, the effective length of the hologram phase ramp, Ω/m, where m is the mode number of the excited diffraction order and Ω is the hologram period, should be adjusted in proportion to the channel wavelength. That is the wavelength dependence of the beam deflection should be suppressed.

As described later the channel equalisation can be uniform across each channel so as to provide the required compensation as measured at the centre of each channel. Alternatively the channel equalisation can vary across each channel, so as to compensate for effects such as amplifier gain tilt that become important at higher bit rates such as 40 Gb/s. Channels may be blocked as described earlier so as to apply policing to remote transmitters that renege on their access agreements or whose lasing wavelength has drifted too far. Furthermore the noise between selected channels may be partially or completely filtered out, as described later. Hence in a second application the

multiwavelength optical processor acts as a channel controller.

Although such processing can be applied using conventional optics the multiwavelength optical processor has a number of advantages. Compared to a series of reconfigurable optical filters the multiwavelength processor has the advantage that the channels are processed by independent blocks of pixels. Hence reconfiguration of the processing applied to one or more selected channels does not cause transient effects on the other channels. Compared to a parallel optical architecture that separates the channels onto individual waveguides/fibres before delivery to a processing device (and hence avoids the transient effects) the multiwavelength optical processor has a number of advantages. Firstly it can process the whole spectrum entering the processor (subject to the grating spectral response). Secondly the filter passband width is reconfigurable and can be as much as the entire spectrum, reducing concatenation effects that occur when filtering apart sets of channels routed in the same direction. Thirdly the filter centre frequencies are reconfigurable. Further advantages are discussed later in this application.

By having a choice of two or more deflection angles at the SLM every input channel may be routed independently to one of two or more output ports. There may also be two or more input ports. It may be shown that for one or more parallel input beams, the action of the grating and main routing lens is such that all channels at the same wavelength but from different input ports are incident at

the same transverse position at the SLM. Again this is because "parallel rays converge to the same point". Hence these channels at the same wavelength are incident on the same channel processing hologram and/or tip-tilt device. As every wavelength channel is incident on a different device, the device response may be optimised for that particular wavelength. For example if a pixellated SLM is used the deflection angle is proportional to the wavelength. Hence small adjustments in the phase ramp can be used to adjust the deflection angle to suit the wavelength to be routed. All channels incident on a particular transverse position on the SLM must be reflected from that same position. As this position is in the focal plane of the lens beams from said position will emerge parallel from the lens and travelling towards the grating. After the grating the beams will be diffracted (according to their wavelength). It may be shown that all beams entering the system in a parallel direction will emerge from the system in exactly the opposite direction. It may also be shown that all beams subject to the same output angle from the SLM will emerge coincident from the system and may therefore be collected into the same port.

Analysis of the beams at the diffraction grating in this architecture shows that the spot size required for a given wavelength channel separation and beam clipping factor C at the hologram depends on the grating dispersion but does not depend on the routing lens focal length nor the number of output ports. The beam centres must be far enough apart to provide adequate crosstalk suppression. Hence the greater the number of output beams the further the beam must be steered by the SLM and lens. As an example

consider just routing in 1-D, into the m'th diffraction order with a hologram period Ω and a routing lens of focal length f. The output beam at the diffraction grating will be offset from its zero order reflection by a distance given approximately by $f.m.\lambda/\Omega$, where λ is the optical wavelength and Ω/m is the effective length of the phase ramp on the hologram (as explained previously). To increase this offset distance the length of the phase ramp can be reduced, which tends to require smaller pixels, or the lens focal length can be increased. In practice there is a lower limit to the pixel size set by the dead space losses and the size of the pixel drive circuits, while increasing the lens focal length makes the overall system longer. This can be a particular problem when there are many output ports, even when close-packing 2-D geometries are used for the output beams.

Referring to Figure 14, another method is to put a demagnification stage between the SLM 400 and a routing lens 404. This is positioned so that the SLM 400 is in the object plane of the demagnification stage while the image plane of the demagnification stage 402 is where the SLM would otherwise be, that is in the focal plane of the routing lens 404. What appears in this image plane is a demagnified image of the SLM 400, which therefore acts like a virtual SLM 402 with pixels smaller than those of the real SLM 400 and hence a shorter effective phase ramp length. As an example consider the two lens confocal magnification stage shown in Figure 14. In Figure 14 f1 is the focal length of the first lens 401 and f2 is the focal length of the second lens 403 (closer to the virtual SLM).

The demagnification is f2/f1 while the beam-steering deflection angle is magnified by f1/f2.

While this method for increasing the effective beam deflection angle has been described and illustrated in the context of one particular routing architecture it could also be applied to other optical architectures using SLMs to process an optical beam, for routing and other applications. The operating principle is that the virtual SLM 402 has an effective pixel size and hence an effective phase distribution that is smaller in spatial extent than that of the real SLM 400, by an amount equal to the demagnification ratio of the optics. The off-axis aberrations that occur in demagnification stages can be compensated using any of the methods described in this application or known to those skilled in the art.

In an alternative embodiment the input beam or input beams contain bands of channels, each incident on their own device. In this and the previous embodiment for the channel equaliser the beam deflection or channel equalisation may vary discontinuously with wavelength.

In a third embodiment the input beam could contain one or more signals spread almost continuously across the wavelength range. The light at a particular wavelength will be incident over a small transverse region of the SLM, with, typically a Gaussian type spatial distribution of energy against position. The position of the peak in the spatial distribution is wavelength dependent and may be calculated from the grating and lens properties. For such a system the beam deflection or channel equalisation varies continuously with wavelength. The pixellated SLM is

divided into blocks, each characterised by a 'central wavelength', defined by the wavelength whose spatial peak lands in the middle of the block. A particular channel equalisation or beam deflection is applied uniformly across this block. Light of a wavelength with a spatial peak landing in between the centres of two blocks will see a system response averaged across the two blocks. As the spatial peak moves towards the centre of one block the system response will become closer to that of the central wavelength for the block. Hence a continuous wavelength response is obtained. The block size is selected with respect to the spatial width of each beam in order to optimise the system response. This method is particularly attractive for increasing the wavelength range of a 1 to N switch.

To achieve this aim the multi-wavelength architecture described earlier, should be configured so as to allow reconfigurable routing from a single input port to one of a set of multiple output ports. The length of the phase ramp used to route the beam to each output port should vary slowly across the SLM such that the wavelength variation in the deflection angle is minimised, or certainly reduced considerably compared to the case for which the phase ramp length is uniform across the SLM. Hence the transverse position of each output beam will vary considerably less with wavelength, with a consequent reduction in the wavelength dependence of the coupling efficiency at the system output. Alternatively, the length of the phase ramp can be varied spatially so as to obtain some desired wavelength dependence in the coupling efficiency.

The efficiency of a blazed diffraction grating is usually different for light polarised parallel or perpendicular to the grating fringes. In the multi-wavelength systems described above the effect of the quarter-wave plate inside the SLM is such that light initially polarised parallel to the grating fringes before the first reflection from the blazed grating is polarised perpendicular to the grating fringes on the second reflection from the blazed grating. Similarly the light initially polarised perpendicular to the grating fringes before the first reflection from the blazed grating is polarised parallel to the grating fringes on the second reflection from the blazed grating. Hence, in this architecture, the quarter-wave plate substantially removes the polarisation dependence of the double pass from the blazed grating, as well as that of the phase modulation. As is clear to those skilled in the art, this polarisation independence requires the fast and slow axes of the integrated quarter-wave plate to have a particular orientation with respect to the grating fringes. This required orientation is such that the integrated quarter-wave plate exchanges the polarisation components originally parallel and perpendicular to the grating fringes.

Referring to Figure 28 a wavelength routing and selection device 600 is shown. This device has a multiwavelength input 601 from an input port 611, and provides three outputs 602, 603, 604 at output ports 612-614.

The device 600, similar to the device of figure 12, has a grating 620, a lens 621 and an SLM 622, with the

disposition of the devices being such that the grating 620 and SLM 622 are in respective focal planes of the lens 621. Again the grating is shown as transmissive, although a reflective grating 620, such as a blazed grating, would be possible. Equally, the SLM 622 is shown as reflective and instead a transmissive SLM 622 could be used where appropriate.

The grating 620 splits the incoming beam 601 to provide three single wavelength emergent beams 605, 606, 607 each angularly offset by a different amount, and incident on the lens 621. The lens refracts the beams so that they emerge from the lens mutually parallel as beams 615,616, 617. Each of the beams 615,616,617 is incident upon a respective group of pixels 623,624,625 on the SLM 622. The groups of pixels display respective holograms which each provide a different deviation from the specular direction to provide reflected beams 635, 636 and 637. The beams 635, 636, 637 are incident upon the lens 621 and routed back to the grating 620.

In the embodiment shown, the beams 605 and 606 are finally routed together to output port 614 and the beam 607 is routed to output port 612. No light is routed to port 613.

However it will be understood that by careful selection of the holograms, the light can be routed and combined as required. It would be possible to route light of a selected frequency right out of the system if needed so as to extinguish or "block" that wavelength channel. It is also envisaged that holograms be provided which provide

only a reduced amount of light to a given output port, the remaining light being "grounded", and that holograms may be provided to multicast particular frequencies into two or more output ports.

Although the number of output ports shown is three, additional output ports can be included: with appropriate lens design the insertion loss varies weakly with the number of output ports. Although the output ports are shown in the same plane as the input it will be clear to those skilled in the art that a 2-D distribution of output ports is possible.

Hence the device 600 provides the functions of wavelength demultiplexing, routing, multiplexing, channel equalisation and channel blocking in a single subsystem or module. These operations are carried out independently and in parallel on all channels. Reconfiguration of one channel may be performed without significant long-term or transient effects on other channels, as occurs in serial filter architectures. With most conventional optics (including parallel architectures) separate modules would be required for demultiplexing, routing, multiplexing and the power control functions. This adds the overheads of fibre interconnection between each module, separate power supplies, and a yield that decreases with the number of modules. The device 600 has no internal fibre connections, and a single active element requiring power - the SLM. Each active processing operation (routing, power control, monitoring etc) requires an associated hologram pattern to be applied by the controller but may be carried out by the same SLM, hence the yield does not decrease with increased

functionality. Although integrated optical circuits can be made that combine different functions, in general they require a separate device inside the optical chip to perform each function. Again the power (dissipation) and the yield worsen with increased functionality.

Further applications of the multiwavelength optical processor are as an optical performance monitor, and as a programmable multifunction optical test set. In both applications the SLM may perform two or more different but concurrent monitoring or testing functions on two or more portions of the wavelength spectrum. This may be achieved by applying routing holograms to the pixel block associated with said portions of the wavelength spectrum that connect optically a selected input fibre or input optical source to a selected output fibre or output detector. The routing hologram applied to each portion of the spectrum may be reconfigured as required in order to perform different testing or monitoring functions on said portion of the spectrum. To each output photo detector or to each input optical source is applied control circuitry for carrying out the required tests.

Considering firstly the performance monitor, the method described later to measure the centre wavelength of a channel may be applied to a selected channel in order to monitor the lasing wavelength. Earlier in this application there is a description of how to measure the second order moments of a beam. Consider orthogonal axes u and v at the SLM. Choose the orientation of these axes such that all wavelength channels entering the system and incident on the grating in the defined parallel direction have the centres

of their associated beams along a line of constant v. Hence the position along the u axis increases with wavelength. The second order moment in the v direction is related to the spot size of a monochromatic beam. The second order moment in the u direction is related to this spot size and also the wavelength distribution of the energy in each channel. Hence by measuring second order moments, as described previously, an estimate of the channel bandwidth may be obtained. The noise power between a selected pair of channels may be measured by routing that part of the spectrum between the channels towards a photo detector. Similarly the power of a selected channel may be measured by routing towards a photo detector. One or more photo detectors may be assigned to each type of measurement allowing many parallel tests to proceed independently on different portions of the spectrum. Alternatively the control circuitry associated with each photo detector output may be designed to be able to perform two or more of the required monitor functions.

Hence the multiwavelength optical processor acts as an optical spectrum analyser with integrated parallel data processing. Conventional methods for achieving this use either a grating that is rotated mechanically to measure different portions of the spectrum with a photo detector in a fixed position, or a fixed grating with a linear photodiode array. In both cases data acquisition hardware and software and data processing are used to extract the required information from the measured spectrum. Both systems are expensive and require stabilisation against the effects of thermal expansion. The multiwavelength optical processor has no moving parts, can use as few as a single

photodiode, and can adapt the holograms to compensate for temperature changes, ageing, aberrations as described previously in this application. The multiwavelength processor also carries out the data processing to measure centre wavelength and channel bandwidth in the optical domain. When used in a communications network the optical performance monitor would pass the processed data from the measurements to a channel controller, such as the one described previously, and also to a network management system. The signal for monitoring would be tapped out from a monitor port at the channel controller or from a routing system or from elsewhere in the network. The monitor processing could be implemented with the same or a different SLM to the channel controller. Monitor processing can also be implemented with the same or different SLMs used to route beams in the add drop routers and routing modules described later in this application. The control electronics for the monitor processing can be integrated with the control electronics for the pixel array.

With reference to figure 30, the programmable multifunction optical test set 900 has a multiwavelength optical processor 928 with one or more inputs 901, 902 from optical sources, 903, 904 each with control circuitry 905, 906 for performing one or more tests of optical performance. The channel equalisation and blocking functions described earlier may be used to adapt the spectrum of the selected source to suit a particular test. The channel filtering functions described later may be used to synthesise a comb or some other complex wavelength spectrum from a selected broadband optical source. A

further input 907 from an optical source 910 may be used to exchange data and control information from control and communications software 929 with the same 900 or one or more other optical test sets, allowing remote operation over the fibre under test, or some other fibre. One or more outputs ports 911, 912 from the multiwavelength optical processor are connected to a set of optical fibre transmission systems (or other devices) 913, 914 to be tested. Routing holograms are applied to the pixels associated with the selected parts of the spectrum to direct said parts of the spectrum or said data and control information to the selected output port. A further or the same multiwavelength optical processor has input ports 917, 918 connected to the set of optical fibre transmission systems (or other devices) 915, 916 under test and output ports 919, 920 connected to a set of one or more photo detectors, 921, 922 each with associated control circuitry 925, 926 for carrying out testing functions. A further photo detector 924 connected to a further output port 923 is used to receive data and control information from one or more other test sets. Routing holograms are applied to direct the signals from the selected input port to the required photo detector. The optical monitor functions described above can be applied to the signals. The frequency shaping of the source or spectrum can take place at the transmitting test set or the receiving test set. The control electronics for the test set 927 and control and communications software 929 can be integrated with the control electronics for the pixel array.

Conventionally, different optical sources would be used to perform different types of test on the wavelength

and transmission properties of fibres or devices under test; a separate optical switch would be used to poll the devices under test, and an external communications link would be used for communication of data and control information with a remote test set. However, the multiwavelength optical processor may be used to provide a multifunction programmable optical test set that is capable of remote operation. The test set may include as few as a single source and a single photo detector and performs a wide range of tests on fibres or devices selected from a group of fibres or devices attached to the test ports of the multiwavelength processor.

A multiwavelength system with two inputs and two outputs can work as an add/drop multiplexer. Add-drop multiplexers are usually used in ring topologies, with the 'main' traffic travelling between the ring nodes, and 'local' traffic being added and dropped at each node. Considering each node, one input (main in) is for the ensemble of channels that has travelled from the 'previous' routing node. The second input (add) is for the ensemble of channels to be added into the ring network at the add/drop node. One output (main out) is for the ensemble of channels travelling to the 'next' routing node while the second output (drop) is for the ensemble of channels to be dropped out of the ring network at the node. If a particular incoming wavelength channel is not to be 'dropped' at the node, then the channel-dedicated device at the SLM should be configured to route the incoming wavelength from the main input to the main output. However, if a particular incoming wavelength channel is to be dropped, then the channel-dedicated device at the SLM

should be configured to route the incoming wavelength from the main input to the drop output. In this case the main output now has available capacity for an added channel at that same wavelength. Therefore the channel-dedicated device at the SLM should also be configured to route the incoming wavelength from the add input to the main output.

The multiwavelength optical processor described in this application distributes wavelength channels across and collects the wavelength channels from a single SLM, allowing the SLM to provide a set of one or more processing operations to each of the channels. However, in most conventional reconfigurable add drop multiplexers, the routing has to be carried out in two successive stages. Usually a first 1x2 switching stage either drops the channel or routes the channel through, while a second 2x1 switching stage either receives the through channel from the first stage or receives an added channel. Fortunately, careful choice of the deflection angles applied by the SLM, and the sharing of the same hologram by input signals at the same wavelength, allows add drop routing to be carried out in a single stage. Hence add drop routing may be conveniently applied in an independent and reconfigurable manner to every wavelength channel in the multiwavelength optical processor.

An explanatory diagram is shown in Figure 13a.

Referring now to Figure 13a, an SLM 141, used in the context of the multi-wavelength architecture, has a pixel block 140 and/or tip-tilt device upon which a main input beam 130 is incident, at an angle m1 to the normal 142.

The main beam has a zero order or specular reflection 130a. Holograms are made available that will cause deflections at $+\theta_1$ to the specular direction and $-\theta_2$ to the specular direction. Due to the display of a first hologram on the pixel block 140, the main output is deflected by $+\theta_1$ from the specular direction to a main output beam 132. An add input 131 is incident at an angle a1 on the block 140, and produces a zero order reflection 131a. The device also has a drop output beam direction 133.

When the hologram applying the deflection of $+\theta_1$ is displayed, light at the relevant wavelength entering in the add direction 131 is not steered into either of the main output beam direction 132 or the drop output beam direction 133. Effectively it is 'grounded'. This feature may be used to help to stop crosstalk passing between and around rings.

When the hologram applying the alternative deflection of $-\theta_2$ is applied, the add input is routed to the main output beam direction 132 while the main input is routed to the drop output beam direction 133.

In the interests of clarity, a simplified diagram may be used to explain an add-drop using 1-D routing. This is shown in figure 13b in which the point 134 represents the output position of the specular reflection from the add input while the point 135 represents the output position of the specular reflection from the main input. When a first routing hologram is applied the main output beam is deflected by an angle of $+\theta_1$ and therefore the output position of the main beam is deflected by an offset of $f.\theta_1$,

compared to the output position 135 of its specular reflection. Here f is the focal length of the routing lens. In figure 13b this deflection is represented as a vector 136a and the output beam is routed to the main output 137. The beam from the add input is subject to the same angular deflection with respect to its specular reflection and is thus deflected by a vector of equal length and the same direction 136b with no output port to receive it this beam is "grounded". When a second routing hologram is applied the main output beam is deflected in the opposite direction by a vector 138a to arrive at a drop output 139. The beam from the add input is deflected by an identical vector 138b to arrive at the main output 137.

The example in Figure 13a assumes 1-D routing due to the hologram. Given an ability to route in 2-D, either with two orthogonal tip-tilt electrodes or a 2-D pixel array (as described previously) the arrangement of the four ports can be generalised, as shown in Figure 15. The use of 2-D routing allows closer packing of the input and output beams reducing off-axis aberrations. In Figure 15 the output positions are shown in 2-D. The point 151 represents the output position of the zero order (specular) reflection from the add input while the point 152 represents the output position of the zero-order reflection from the main input. The hologram deflections are represented as vectors 155a, 155b, 156a and 156b. Vector 155b has the same length and direction as vector 155a and vector 156b has the same length and direction as vector 156a. When a first routing hologram is applied the add input beam is deflected from its specular output position 151 by the vector 155b to the main output 154 while the

main input is deflected from its specular output position 152 by the identical vector 155a to the drop output 153. When the alternate routing hologram is applied the main input is deflected from its specular output position 152 by the vector 156a to the main output 154 while the add input is again 'grounded' due to deflection by the identical vector 156b.

In this general configuration there are six variables. These are the output positions of the main output and drop output, the positions of the zero order reflections from the main input and add input, and the two hologram deflections. Of these six variables only three are mutually independent.

For example, selection of the input position for the main input with respect to the routing lens axis defines the output position of the zero order reflection, 152. If this is followed by selection of the output positions for the main and drop outputs with respect to the routing lens axis then all three independent variables have been defined. Hence the required hologram deflections are determined as is the input position for the add input with respect to the routing lens axis (which then defines 151).

Figures 13a, 13b and 15 show the hologram deflections required to provide add-drop routing: figures 13a and 13b assume 1-D routing while figure 15 assumes 2-D routing. A multiwavelength add-drop architecture using such hologram deflections is shown in figure 29. Compared to other methods for achieving add-drop functionality, the advantages are as described previously for figure 28.

Turning now to Figure 29, an add/drop multiplexer device 700 has two input ports 701, 702 and two output ports 703,704. The first input port 701 is for an input beam 711 termed "add" and the second input port 702 is for a second input beam 712 termed "main in" having two frequencies in this embodiment. The first output port 703 is for a first output beam 713 termed "drop" and the second output port 704 is for a second output beam 714 termed "main out"

The input beams 711, 712 are incident upon a grating 720 that deflects the beams according to wavelength to provide emergent beams 731, 732 and 733. The emergent beams 731, 732 and 733 are incident upon a lens 722 having its focal plane at the grating 720, and the beams emerge from the lens respectively as beams 741, 742, and 743 to be incident upon an SLM 722 in the other focal plane of the lens 721. As the beams 741, 742 do not originate on the grating 720 from the same location, they are not mutually parallel when emerging from the lens 721. The beam 743 is from a point on the grating 720 common to the origin on the grating 720 of beam742, and hence these beams are mutually parallel. Although the grating is drawn as transmissive and the SLM as reflective, these types are arbitrary.

The first beam 731 and the third beam 733 are at the same wavelength, hence they emerge parallel from the grating 720 and are refracted by the lens 721 propagating as beams 741 and 743 respectively to a first group or block of pixels 723 on the SLM 722. This pixel block 723 applies the required hologram pattern that routes a channel

entering the add port 701 to the main output 704, and also routes a channel entering the main input 702 to the drop port 703. Hence the first group of pixels 723 deflects the first beam 741 to provide first reflected beam 751, and deflects the third beam 743 to provide third reflected beam 753.

The second beam 732 is at a different wavelength to the first and third beams 731 and 733 and therefore emerges at a different angle from the grating 720. This third beam is refracted by the lens 721 and propagates as beam 742 to a second group of pixels or pixel block 724 on the SLM 722. This second group of pixels applies the hologram pattern that routes a channel entering the main input port 702 to the main output port 704 and "grounds" a channel entering the add port 701. The second group of pixels 724 deflects the second beam 742 to provide the second reflected beam 752. The holograms on the first and second groups of pixels are selected, (examples were described for figures 13a, 13b and 15), so that the first and second reflected beams 751,752 are mutually parallel; the third beam 753 is routed in a different direction. The consequence of this is that the first and second beams 751,752, after passing again through the lens 721 become incident at a common point 726 on the grating 720, and emerge as main out beam 714. The third beam 753 is incident upon a different point on the grating 720 and emerges into as the drop beam 713.

In most cases ring networks are bi-directional, with separate add/drop nodes for each direction of travel. In some networks a loopback function is required. This allows isolation of one segment of the ring in case of link

failure, for example. It also allows the transmission systems for both directions of a link between two nodes to be tested from a single node. This latter function is useful to confirm that a failed link has been repaired. Loop back requires the main input on each add/drop node to be routed to the main output on the other add/drop node, as shown in Figure 16.

The figure shows a first module 161a and a second module 161b. The first module 161a has a main input 162a, an add input 166a, a loop back input 165a, a main output 163a, a drop output 167a and a loop back output 164a. The second module 161b has a main input 162b, an add input 166b, a loop back input 165b, a main output 163b, a drop output 167b and a loop back output 164b.

The node is divided into two sides: a west side 168 and an east side 169. Loop back may be required for one or for both sides of the node. Channels coming from the ring enter the first module 161a on a main input 162a and enter the second module 161b on a main input 162b. In normal operation through channels will be routed from the main input 162a to the main output 163a and from the main input 162b to the main output 163b.

In loop back operation for the west side 168 the through channels entering the input 162a on the first module 161a are routed to the loop back output 164a. This output 164a is connected to the loop back input 165b of the second module 161b. In loop back operation for the west side all channels entering the input 165b are routed to the main output 163b of the second module 161b.

In loop back operation for the east side 169 the through channels entering the second module 161b on the main input 162b are routed to the loop back output 164b. This output 164b is connected to the loop back input 165a of the first module 161a. In loop back operation for the east side 169 all channels entering the input 165a are routed to the main output 163a of the first module 161a.

The function can be implemented in the four port add drop node (explained in figures 13, 13a, 15 and 29) by selecting a further hologram deflection 179a and 179b, as shown in Figure 17. In the four port architecture both sides of the node loop back at the same time. This is due to the sharing of the same hologram by input signals at the same wavelength. In figure 17 the vector 179a deflects the main input from its specular output position 172 to the loop back output 176. The identical vector 179b is applied by the shared hologram to the loop back input such that it is deflected from its specular output position 173 by the identical vector 179b to the main output 175. The other vectors 177a, 177b, 178a and 178b are used for normal add-drop operation: 174 is the drop output and 171 is the specular output position for the add input.

When such a hologram is applied the main input is routed to the loopback output and the loop back input is routed to the main output. The two add/drop nodes are then connected as in Figure 16.

The loop back function can be implemented in other add drop architectures (described later) by reserving drop

ports for loop back out and add ports for loop back in. In these other architectures the loop back may be applied to just one side of the node, as well as to both sides.

The method used to provide loop back ports may also be applied to the multiport add drop (figure 18). This method may be used to provide cross connection ports to exchange channels between adjacent add drop nodes.

It is also possible to devise holograms for multicast, i.e. forwarding an incident light beam to each of several outputs. Such a hologram can be applied to route the main input to two outputs, with vectors 177a and 178a (in figure 17). In this case the device is performing a drop and continue function. This is required to provide a duplicated path at nodes connecting two touching ring networks.

Alternatively, or additionally, additional inputs and outputs can be provided so as to have a separate input for each added channel and a separate output for each dropped channel. This saves the expense and space taken up by additional filtering and/or wavelength multiplexing components that would otherwise be used to combine all added channels onto a common add port, and to separate all dropped channels to individual receivers. An example layout is shown in Figure 18. In such an implementation care must be taken that sufficient distance is provided between the zero order reflections from each input, and the output positions for each output, so as to control the crosstalk. In Figure 18 deflection v2 is used to deflect channels entering the main input from the specular output position m0 to the main output position m2. Deflections v4

to v7 are used to route from the four add inputs (with specular output positions a1, a2, a3 and a4) to the main output m2. Identical deflections v4 to v7 are applied by the shared holograms to deflect the main input from its specular output position m0 to the four drop outputs d1 to d4. For example if wavelength channels $\lambda 5$ and $\lambda 7$ enter on add input 2 which has its zero order (specular) reflection at a2, the holograms associated with these wavelength channels are configured to produce deflection v5. Hence these two channels will exit from the main output m2. Any channels entering the main input on these two wavelengths will experience the same hologram deflection, and will then exit from output d2.

In one implementation of the multiwavelength architecture the optics between any input fibre and the corresponding input beam that arrives at the diffraction grating, is such that the beam spot that arrives at the SLM is an image of the beam spot that leaves the input fibre. Similarly the optics between any output beam and the corresponding output fibre is such that the beam spot that arrives at the output fibre is an image of the beam spot that leaves the SLM. An example embodiment that would achieve this behaviour is to have an individual collimating lens associated with and aligned to every optical fibre.

Referring to Figure 27, it is assumed that two adjacent channels are being routed in a different direction to the channel under consideration. Thus the beam under consideration has a first hologram 500, and the two adjacent beams have contiguous holograms 501 and 502 respectively. The beam under consideration has an

intensity distribution shown as 510. Hence the energy incident from the beam under consideration on the two adjacent holograms, shown as 511 and 512, is lost. Given a perfect optical system what arrives at the selected output fibre is a demagnified image of the truncated beam. Due to the way that the optical system works, the centre line of the beam incident at the output fibre will be lined up with the centre of the output fibre (indeed the beam deflection angle at the SLM should be adjusted so this is the case).

To each wavelength channel there is assigned a block of pixels applying the same routing hologram. Preferably this block of pixels should be chosen such that an input light beam exactly at the centre wavelength for the channel arrives at the SLM such that the centre of the beam is within a half pixel's width of the centre of the assigned pixel block. In the presence of thermal expansion of the optomechanical assembly the centre of said beam may arrive at a different point on the pixel block resulting in partial loss of signal as more of the beam tails are lost. This problem can be avoided either by expensive thermally stable optomechanics or by dynamic reassignment of pixels to the blocks associated with each channel. For this to be achievable the pixel array should be continuous. This continuity of the pixel array is advantageous for thermal stability whether or not the imaging criterion used to calculate the filter response is satisfied.

The way that the architecture behaves is that for all parallel beams incident on the grating, the position at which the beam at a particular wavelength reaches the SLM is independent of the input port. Hence a reference signal

of known wavelength will be incident at the same particular point on the SLM, whether it comes in with any of the signals to be routed, or on a separate input. The method to measure the position of the beam centre can be used on one or a pair of such reference signals. Given this information, an interpolation method can be used to measure the wavelength of some other signal entering the system on one of its input ports, given the measurement of the position of the centre of the beam associated with said other signal. This information can be used to monitor the behaviour of the original transmitter lasers, and also to inform the controller for the routing system.

Furthermore, given the position of said reference beams as they reach the SLM, and also the centre wavelength(s) of (an)other signal(s) entering the system, the position of the beam(s) at said centre wavelength(s) upon the SLM may also be calculated. This information can be used to control the adjustment of the pixel blocks and/or holograms used to route and control said other signal(s). Conversely the position of said reference beams may be used to select a pixel block that provides a given required centre wavelength for a filter. Hence reconfigurable assignment of pixel blocks may be used to tune the centre wavelength of one or more filter pass bands.

For the purpose of calculating the wavelength filtering response it is assumed that the centre of the beam at the centre wavelength of the channel (shown as 500 in figure 27) arrives exactly at the centre of the associated pixel block. With reference to figure 31, as

the wavelength is increased above the centre wavelength of the channel the centre line 946 of the beam 940 lands at a distance 941 away from the centre 945 of the pixel block or hologram 942. As a result of the offset 941 due to wavelength difference, the beam loses more energy 943 to the adjacent hologram 944. Assuming perfect imaging, what arrives at the output fibre is a demagnified image of this truncated beam.

An important difference for the multi-wavelength architecture, compared to conventional wavelength demultiplexers, is that a wavelength difference from the centre of a wavelength channel does not (to first order) result in an offset error of the beam at the output. This is because of the way the second pass from the grating 'undoes' the dispersion of the (fixed) diffraction grating, as was shown, for example, in figure 12. Hence the original centre line of the truncated beam should be aligned with the peak of the fundamental mode in the output fibre, or, equivalently, aligned with the optical axis of the output fibre. Standard methods for the calculation of coupling efficiency into single-mode fibres have been used to calculate the filter characteristics. Example results are in Figures 19 and 20.

Figure 19 shows the relative transmission Tlo for in-band wavelengths as a function of the ratio of the wavelength offset u to centre of the wavelength channel separation. Each curve in the Figure is for a different value of the hologram clipping factor (CR) in the range 2 to 4: this factor is defined as the ratio of the hologram width to the beam spot size at the hologram.

Figure 20 shows the relative transmission Thi inside the adjacent channel, with u=1 at the centre of the adjacent channel while u-0.5 is at the boundary with the adjacent channel. Again, each curve in the Figure is for a different value of the hologram clipping factor (CR) in the range 2 to 4. Figures 19 and 20 also show that a change in the width of the pixel block assigned to the filter passband (that is a change in CR) will change the passband width and extinction rate at the edges of the passband. Hence reconfigurable assignment of pixel blocks may be used to tune the shape and width of the filter pass bands.

Independently of the clipping factor, the suppression at the edges of the wavelength channel is 6 dB and the full width half maximum (FWHM) filter bandwidth is approximately 80% of the channel separation. Comparison of the different curves in Figure 19 shows that the flatter the filter passband the steeper the skirts at the edges, leading to greater extinction of the adjacent channel, as shown in Figure 20.

This behaviour is advantageous as it avoids the usual tradeoff between adjacent channel extinction and centre flatness. Good centre flatness means that the filters concatenate better, so more routing nodes using such filters can be traversed by a signal before the signal spectrum and hence fidelity starts to deteriorate. Good adjacent channel extinction is also important as it prevents excessive accumulation of crosstalk corrupting the signal.

For example, in a known conventional wavelength demultiplexer the filter pass bands are Gaussian and the 1 dB and 3 dB filter bandwidths are inversely proportional to the square root of the adjacent channel extinction (in dB), such that the greater the extinction, the narrower the filter passband. For the same FWHM filter bandwidth of 80 % a Gaussian filter would have an adjacent channel extinction weaker than 20 dB, leading to crosstalk problems. However for the SLM multi-wavelength architecture the adjacent channel extinction is better than 30 dB, avoiding such problems in most known networks.

As is well-known to those skilled in the art, an arbitrary beam incident on an optical fibre couples partially into the fundamental mode of the fibre with the rest of the beam energy coupling into a superposition of the higher order modes of the fibre. The higher order modes may be stripped out with a fibre mode stripper. The coupling efficiency into the fundamental mode is given by the modulus squared of the ratio of an overlap integral divided by a normalisation integral. The overlap integrand is the product of the incident field and the fundamental mode. The normalisation integrand is the product of the fundamental mode with itself.

Figures 33 and 34 are included with the aim of explaining the behaviour of the 'imaging filter' as described above. Figure 32 shows the truncated incident beam profiles 960-964 as the wavelength is increased from the centre of the channel under consideration, 960, to the centre of the adjacent channel, 964. Truncated beams 961, 962 and 963 are for wavelength differences of a quarter, a

half and three-quarters, respectively, of the channel separation. In the diagram the truncated beam profiles are offset vertically for clarity. The beam profiles are aligned horizontally as they would be physically at the output fibre; the original centre of each truncated beam is aligned with the centre of the fibre fundamental mode. This is because, as explained above, a wavelength difference from the centre of a wavelength channel does not (to first order) result in an offset error at the output. Beam 965 is the fundamental mode of the fibre. Figure 33 shows the overlap integrands 970-974 of the truncated incident beams with the fundamental mode of the fibre, as the wavelength is increased from the centre of the channel under consideration, 970, to the centre of the adjacent channel, 974. The normalisation integrand, 975, is also shown. The results in the figures show that the overlap integrand 974 has almost vanished explaining why the adjacent channel extinction is very strong. Overlap integrands 971 and 972 are for wavelength differences of a quarter and a half, respectively, of the channel separation. These results explain why the overlap integrand decreases slowly with wavelength difference in this range leading to a flat passband centre. In particular for the halfway case, 972, the overlap integral is exactly half of the normalisation integral (from integrating 975). Hence the amplitude transmission coefficient at this wavelength difference is a half with a power extinction of 6 dB, as was shown in figure 19. Therefore two factors are responsible for the excellent filter characteristics. The first factor is that the field incident on the fibre is an image of the field reflected from the SLM. The second factor is that the second pass

from the grating undoes the dispersion applied by the first pass from the grating, such that whatever the wavelength offset inside the collected channel, (to first order), the peak of the reflected truncated beam is aligned with the peak of the fundamental mode of the fibre.

By way of comparison, Figures 34 and 35 illustrate the filtering process for a conventional wavelength demultiplexer. In Figure 34 the centre of a first beam 984 is aligned with the optical axis 980 of the centre of a first optical fibre or optical waveguide 981. Hence the first beam 984 is at the centre wavelength of the channel collected by the first optical fibre 981. A second optical fibre 983, adjacent to the first fibre 981, has an optical axis 982. A second beam 988 is aligned with the optical axis 982 of this second optical fibre. Hence the second beam is at the centre wavelength of the channel collected by the second optical fibre, that is at the centre of the adjacent optical channel to that collected by the first fibre. Beams 985 to 987 are at wavelength differences from the first beam 984 of a quarter, a half, and three-quarters, respectively, of the wavelength separation between the two adjacent channels. The coupling efficiency of each of the beams 985 to 988 into the first optical fibre 981 again depends on the overlap integral of the respective beam with the fundamental mode of the fibre 981. This is mathematically identical to the overlap integral of the respective beam with the first beam 984.

Figure 35 shows the overlap integrands 994 to 998 plotted against a vertical axis 990. The spatial width and shape of each curve is identical, as may be shown

analytically. Hence the overlap integrand is proportional to the amplitude of the curve, as may be read from the axis 990. Curve 994 is the overlap integrand at the centre of the channel, and is the product of the distribution 984 of figure 34 with itself. This curve has an amplitude of 1.0 and hence maximal coupling efficiency. Curves 995 to 997 are the overlap integrands at wavelength differences from the channel centre of a quarter, a half, and three-quarters, respectively, of the wavelength separation between the two adjacent channels. Curve 998 is the overlap integrand at the centre of the adjacent wavelength channel. The coupling efficiency is given by the square of the amplitude of the overlap integrand. The results in figure 35 show that the coupling efficiency for the conventional wavelength demultiplexer decreases more quickly around the centre of the filter passband than for the 'imaging' filter discussed in this application. The results also show that the adjacent channel extinction is weaker for the conventional demultiplexer.

Figures 34 and 35 also explain why there is a performance tradeoff for the conventional multiplexer between filter passband flatness and adjacent channel extinction: to increase the width of the filter passband the beams 985-986 must be incident closer to the first optical fibre 981. Necessarily the beams 987-988 will also be closer to the first optical fibre, reducing the extinction of the adjacent channel, and requiring the second optical fibre 983 to be moved closer to the first fibre 981.

Figures 32 and 33 explain why the imaging filter behaves in a different way, such that a broader filter passband is associated with a greater extinction of the adjacent channel. Beam 960 in figure 32 shows the truncated reflected beam at the centre of the filter passband. The first and second amplitude discontinuities 966a, 966b are due to the two edges of the hologram. An increase in the hologram width relative to the spot size moves these two discontinuities outwards. The significant amplitude discontinuity in the middle beam 962 is exactly at the centre of said beam, whatever the hologram width. This is because said middle beam is associated with a wavelength halfway between the centres of adjacent channels. Hence the coupling efficiency for this halfway point is 6 dB, independently of the hologram width. The significant amplitude discontinuity in the quarterway beam, 961, is exactly halfway between the first amplitude discontinuity, 966a of the centre beam 960 and the significant amplitude discontinuity in the halfway beam, 962. As the first discontinuity 966a moves outwards due to an increased hologram width (in the direction of arrow 967) the significant discontinuity in the quarterway beam must move in the same direction, increasing the overlap integral and improving the filter passband centre flatness. Similarly as the second discontinuity 966b moves outwards (in the direction of arrow 968) the significant discontinuities in the three-quarter way beam 963 and adjacent beam 964 must move in the direction of arrow 968, decreasing the overlap integral and improving the adjacent channel extinction. This explanation reinforces the argument that the two factors described above (imaging and the second 'undoing' pass from the grating) are responsible

for the excellent filter characteristics. This explanation also explains how the selection of the width of the block of pixels assigned to a channel may control the filter passband characteristics.

Analytically it can be shown that the filter response for dropping or adding an isolated channel is purely real. Hence there are no phase distortions with this type of dropping filter. This is advantageous because in many 'flat-top' filters the phase distortions associated with the steep skirts may distort the pulses, particularly in higher bit-rate transmission systems for which the signal bandwidth is broader.

In these calculations it was assumed that the blocks of pixels assigned to each wavelength channel are contiguous. That is there are no 'guard bands' of pixels between each block. Further analysis showed that introducing such guard bands has the effect of decreasing the channel bandwidth for a given channel separation. Hence, preferably the pixel blocks assigned to each wavelength channel should be contiguous. Alternatively guard bands can be used to route in a third direction to deliberately narrow a channel bandwidth, if required.

While the above discussion is for the case of an isolated channel, in which both adjacent channels are routed in a different direction to the channel under consideration, there are also filtering effects that can occur when one or both adjacent channels are routed in the same direction. These effects are caused by 'stitching errors' at the adjacent edges of a pair of holograms

routing in the same direction. For example a stitching error of pi causes (in theory) complete extinction of a light beam at a wavelength exactly halfway between the centres of two adjacent channels, while for an absence of stitching error at either side of a hologram, the transmission is uniform right across the entire channel. Intermediate stitching errors cause intermediate extinction. This acts as an additional programmable filtering mechanism and can be used to advantage to partially or completely filter out amplifier noise between selected channels, if required. Alternatively when maximally flat passbands are required the stitching error should be minimised.

As described previously, all channels entering the architecture at the same wavelength are incident on the same hologram. This is because the input beams are arranged to be parallel as they arrive at the diffraction grating, such that all channels at the same wavelength emerge parallel from the diffraction grating. As the diffraction grating is at the focal plane of the lens the beams therefore converge towards the same point in the other focal plane of the routing lens (or equivalent mirror), at which point the SLM is placed.

Hence for the four port and multiport add/drop devices the channels entering on the main beam (from the main input fibre) share a hologram with those channels at the same wavelength entering on an add port. When configured with one particular routing hologram the channel entering the main input is routed to the (selected) drop port while the channel entering the add port is routed to the main output. Therefore any channel equalisation applied to an added

channel will also be unavoidably applied to the dropped channel. Hence it is not possible to carry out independent channel equalisation on added and dropped channels.

This problem does not occur, however, for the devices with a single input and/or with a single output. This is because in these devices there is no sharing of individual holograms between channels entering or leaving on different ports. Nor does the problem occur for the devices with multiple inputs and multiple outputs, for channels routed from the main input to the main output.

Another configuration of the multi-wavelength architecture is to have a single input port and a separate output port for every wavelength channel and SLM devices for each channel capable of providing a set of many deflections. When configured so that a single channel leaves on each output port, the device acts as a reconfigurable demultiplexer such that the assignment of a particular wavelength to each output port can be changed dynamically.

Conventional wavelength demultiplexers are not reconfigurable and are therefore less flexible as a routing component. They also have a Gaussian filtering characteristic, which is inferior to the filter characteristic of the SLM multiwavelength optical processor, as described earlier. A further advantage of the invention, compared to a conventional free-space wavelength demultiplexer, is that the channel filter bandwidth is independent of the physical separation between the output fibres and also independent of the spot size of

the output fibre. In contrast, for the conventional demultiplexer, the channel bandwidth is proportional to the ratio of the output waveguide spot size to the physical separation of the output waveguides. Consequently, and in order to obtain sufficient channel bandwidth, microlens arrays are required to increase the effective spot size or waveguide concentrators are used to decrease the waveguide separation.

When used in reverse the device acts as a reconfigurable multiplexer, allowing the use of, for example, tuneable lasers at each input. In contrast, for a conventional wavelength multiplexer, fixed-tuned lasers must be used at each input.

A system with a single input port and many output ports can act as a module to form part of a modular routing node. If the system has M output ports and a single input port, then each routing device produces M different deflections, with small adjustments to compensate for wavelength differences and alignment tolerances. All devices (i.e. holograms) producing the same eventual deflection will cause the associated wavelength channel to be routed out of the same output port. Hence such a system can send none, one or many (up to the number of channels entering the input port) channels out from the same output port. The logical function of the module is to sort the incoming channels on the input port according to their required output port, as also illustrated in Figure 21. Considering firstly the case of the routing architecture shown in Figure 12. As there is a single input port, every wavelength channel has its own hologram. Hence independent

channel equalisation may be applied for all the signals flowing through the module.

One application of these modules is to use two of them to make an add/drop node, as shown in Figure 22. Figure 22 shows a first routing module 660 having one input 661 from a previous node, a through output 662 and three drop outputs 663-5, as well as two spare outputs 666,667. A second routing module 670 has a first input 671 connected to the through output 662 of the first module, three add inputs 672-4 and two spare inputs 675,676. The second module 670 has an output 677 to the next node. The second (output) module can be physically identical to the first (input) module but it is used 'in reverse'.

The first module routes all the through traffic out on a common through port 662 while providing multiple drop ports: one for each dropped channel. Any single wavelength or any set of wavelengths can be sent to any drop port. Hence each of the drop ports may connect to a local optoelectronic receiver in a local electronic switch, or to a remote customer requiring one or more channels for remote demultiplexing. The reconfigurability of the wavelength assignment means that the module acts like a wavelength demultiplexer combined with a matrix switching function, so may reduce the switching demands placed on the electronics servicing the drop ports. The ability to send a selectable set of wavelengths to the same port reduces the need for additional fibre/multiplexing components and increases flexibility. Furthermore the routing applied to each wavelength channel may be multicast, as well as unicast. Hence drop and continue operation may be provided in which

the signal is routed to a drop port and also to the through port. If a transparent optical connection is required through to access and distribution networks this multicasting may also be applied to broadcast signals to a number of drop fibres. In this multicasting operation one or more of the previously described power control methods may be applied to equalise the channels on the through and drop fibres, as required for the transmission systems and receivers to function correctly.

The first module provides any channel equalisation and monitoring required for the drop ports. Channel equalisation and monitoring for the through channels may take place in the first module, or the second module, or both.

The second module provides multiple add ports: one for each added channel. Any single wavelength or any set of wavelengths can be received at any of the input ports. This allows each of the add inputs to be a tuneable laser, which would not be possible with a conventional non-reconfigurable wavelength multiplexer. In the conventional case there are two options for providing the added channels. A first option is to use conventional non-reconfigurable wavelength multiplexing to combine the added channels, because this is much more efficient in terms of insertion loss than a non-wavelength-specific multiplexer (such as a 1:N fibre splitter used in reverse, that is a N:1 combiner). However this requires each input port of the wavelength multiplexer to have a transmitter laser at a fixed wavelength. When a particular wavelength channel is added at the node the associated transmitter is in use.

However when the network reconfigures its wavelength assignment that laser may no longer be in use. To allow complete reconfigurability a complete set of transmitter lasers must be provided, one for each system wavelength. This makes reconfigurable add drop nodes uneconomic when adding small numbers of channels, due to the large overhead of idle transmitter lasers. A second option is to use tuneable lasers, one for each added channel. With conventional optics this requires a non-wavelength-specific multiplexer, which imposes insertion loss penalties. The multi-wavelength architecture described provides a reconfigurable wavelength multiplexer with lower insertion loss than a N:1 combiner. Furthermore the routing applied to each wavelength channel can be reconfigured without transient effects on other wavelength channels, as occurs in 'serial' multiplexing architectures that have a reconfiguration capability.

Any add port can receive a reconfigurable set of wavelength channels from a remote customer. The second module also provides any channel equalisation required for the added signals. Finally the second module routes the through channels entering on the port 671 to the output 677.

The spare ports 666,667,675,676 can be used for routing selected channels to optical regenerators if the signal quality demands it; to wavelength converters to avoid wavelength blocking; to another add/drop node to allow cross-connection between rings, as shown in Figure 23, or to further modules to allow expansion, as shown in Figure 24.

Figure 23 shows a first to fourth routing modules 720, 730, 740 and 750. The first and fourth modules each have one input 721, 751, a through output 722, 752, a cross-connect output 723,753 and a number of drop outputs721, 754. The second and third modules 730,740 each have respective single output 731,741, a number of add inputs 732,742 a cross-connect input 733,743 and a through input 734, 744. The through output 722 of the first module 720 is connected to the through input 734 of the second module 730, and the through output 752 of the fourth module 750 is connected to the through input 744 of the third module 740. The cross-connect output 723 of the first module 720 is connected to the cross-connect input 743 of the third module 740, and the cross-connect output 753 of the fourth module 750 is connected to the cross-connect input 733 of the second module 730.

The first and second modules 720, 730 are on one ring and the third and fourth 740, 750 on a second ring. This cross connection capability allows a new ring network to be overlaid on an original ring network when the original ring capacity is becoming exhausted. Channels may be exchanged between the two rings at each node as required. Hence the ring network acts like a ring with two fibres per link (in each direction around the ring). The concept may be extended to three or more overlaid rings, and hence three or more fibres per link (in each direction around the ring). As is well known from many traffic studies, increasing the number of fibres per link reduces significantly a phenomenon known as wavelength blocking, such that more efficient use is made of the capacity of

each fibre. Hence cross connection between rings makes better use of the available capacity, allowing more traffic to be carried for the same investment in infrastructure. Cross connection may also be used to exchange signals between diverging rings.

Figure 24 shows expansion of a first (input) module 760 having a single input 761, and five outputs 762-6,via an optical amplifier 768 and an intermediate module 770 having four outputs 771-4. The first output 762 of the first module 760 is a through path, the third output 764 is an expansion port and provides an input to the optical amplifier 768, and the output 769 of the optical amplifier is to the intermediate module 770. The intermediate module 770 has an expansion port 771 and three new ports 772-4. Fourth and fifth outputs 765, 766 of the input module 760 form drop outputs. The same principle can also be applied to expansion of a second (output) module. The use of such modules allows extra add and drop ports to be provided without service interruption to the channels flowing through the add drop node. It also allows network operators to apply just in time provisioning, delaying investment in infrastructure until the demand is there to use it. Furthermore it is only the channels dropped or added through the expansion module(s) that are subject to an additional amplification stage. If every node in the ring were upgraded in this manner, the channels should only pass through an additional two amplification stages. This could be reduced to one additional stage by suitable assignment of the added and dropped channels to the original and expansion module.

Returning to the basic routing module shown in Figure 21. This type of connectivity would be useful in mesh networks where each node is connected by a multi-fibre link to, typically, each of between two and five nearest neighbour nodes. Each link carries traffic to and from one of the nearest neighbour nodes. Usually individual fibres in the link carry traffic in just one direction but some are bi-directional. For an example where a link has an average of six pairs of external fibres and a node has five links, then there would be thirty external incoming fibres and thirty external outgoing fibres. The function of the node is to route any wavelength channel from any incoming fibre to any outgoing fibre. Each fibre may carry many wavelength channels. Currently up to 160 channel systems are being installed although 40 or 80 channel systems are more usual.

An ideal node architecture allows the network operator to start with one or more add/drop nodes connected to one or more rings and then allow the individual add/drop nodes to be connected so that the network topology can evolve towards a mesh. The node architecture should also allow extra fibres to be added to each link as required to meet the demand, with the extra parts or modules of the node being installed as and when required. Fibre management and installation between sub-components inside the routing node is also expensive.

A known architecture for such a routing node uses a separate wavelength demultiplexer for every input fibre. The separated wavelength channels are then carried over

optical fibres to NxN optical switches. To avoid internal wavelength blocking then all channels at a particular wavelength must be connected to the same NxN switch. Hence the switch will receive channels at the same wavelength from every single input fibre. The channels leaving the switch are carried over optical fibres to a separate wavelength multiplexer for every output fibre. Hence the switch will route channels at the same wavelength towards every single output fibre.

These switches have a sufficient number of ports for added and dropped channels, and channels passing to and from wavelength conversion and optical regeneration. This sufficient number is estimated based on traffic analysis as it depends on the instantaneous mapping of channels between nodes and the wavelength and fibre allocation. Each switch may service one or more wavelength channels. In one device, the number of fibres is around 3000 resulting in significant fibre management and installation costs. Even grouping together different fibres to or from the same link and grouping together the add fibres and regenerator fibres only reduces the number of separate entities to be managed to 560.

With such a large number of fibres it is not economic to provide optical amplifiers inside the routing node to compensate for insertion losses. Another problem with this architecture is how to add in extra external fibres once the switch capacity has been exhausted with the current number of external fibres. This cannot be done without replacing every single switch. In advance it is difficult

to know how large to provision the switch to avoid or delay this problem.

An alternative node architecture uses one of the multi-wavelength architectures described to provide a separate module for every input fibre and a separate module for every output fibre. Consider first an input module. This should be designed so that none, one, many or all of the input channels may leave any of the output ports (as shown in Figure 21). These output ports are used to carry channels towards output modules and towards other parts of the node providing wavelength conversion, regeneration and ports to electronic switches, for example. A connection between an input module and an output module carries every wavelength channel mapped between the corresponding input and output fibre. Hence the logical function of an input module is to sort the incoming channels according to their destination output fibre. This logical functionality was illustrated in Figure 21.

A particular input module does not have connections to every output module. It does not have connections to output modules going back to the same neighbouring node from which the input channels have travelled, except perhaps for network monitoring and management functions. It might not need to have separate connections to every output module for the output fibres to the other neighbouring nodes. It is however provided with sufficient connectivity to the output channels on every output link to avoid unacceptable levels of wavelength blocking. For example each input module could be connected to a subset of the output modules, with an overflow system used to provide

a connection to the other output modules, when required. An output module is designed like an input module but works in the opposite direction. Hence the logical function of the output module is to collect the channels coming from each input module and direct them to a common output port.

In this architecture, the dropped channels and channels needing wavelength conversion may exit from each module on a common port or a pair of ports. As a result of using the modules it can be shown that satisfactory performance is achieved using fewer than 1000 fibres and fewer than 50 fibre groups.

Hence the total number of fibres inside the node is reduced by a factor of over 3 while the total number of fibre entities to be installed and managed is reduced by a factor of 10 or more. This represents a significant reduction in cost and complexity.

An example wavelength-routing crossconnect using the modules is shown in Figure 25. Figure 25 shows four input routing modules 790-3, each with a respective input 790i-793i and four outputs 790_{o1}-790_{o3} etc. and four output routing modules 794-7 each with four inputs and a respective single output 794o-797o to a respective output fibre. One output of each input module 790-3 forms a drop output. The input and output modules are associated together with input module 790 associated with output module 794, input module 791 associated with output module 795, input module 792 associated with output module 796 and input module 793 associated with output module 797. The remaining three outputs of each input module are cross-

connected to the non associated output modules, so that for example the three non-drop outputs of input module 790 are coupled to respective inputs of output modules 795, 796 and 797. Specifically, output 790_{01} is connected to output module 795. Of the inputs to the four output modules, one per module is an add input and the remainder are connected to outputs of the input modules 790-3.

In the example the routing function carried out by each input module 790-3 is to sort the incoming channels with respect to the selected output fibre 794o-797o for example, and with reference to the figure, all wavelength channels entering the cross-connect on input 790i that need to leave the cross-connect on 795o are routed by the input module 790 to the output 790_{01}. This output carries these channels to the output module 795 which is collecting frequency channels for output 795o. The output module combines all incoming channels onto a respective single output.

In this architecture channel equalisation may be carried out independently for all channels routed through the cross connect.

The cross connect architecture of Figure 25 is modular in that it can be used to build a range of nodes of different connectivity and dimension. The modules can be used to assemble a node like that described above, starting with only 1 or 2 fibre pairs per link and adding in extra modules to allow more fibres per link. Extra modules can be added in and connected up as and when required, allowing the network operator to delay investment in infrastructure

for as long as possible. When the node has reached, for example, 6 fibre pairs per link and the capacity begins to be exhausted there are three ways to upgrade the node. The first way is to upgrade the numbers of wavelength channels on particular fibres in each link. This requires replacing the associated modules with modules processing more channels. However the other modules (and the fibre interconnections) can remain in service. In contrast for the conventional architecture as well as upgrading the demultiplexers and multiplexers associated with the particular fibres to be upgraded, a whole set of NxN switches must be installed, one for every new system wavelength. These switches will remain under-utilised until all the fibre systems have been upgraded.

A second way to upgrade the node is to replace selected modules with models providing an increased number of fibre choices per output link allowing more fibres per link. This requires the installation of more fibre groups inside the node. In contrast for the conventional architecture every NxN switch must be replaced meaning the associated system wavelengths would be out of service on every fibre entering or leaving the node.

A third way to upgrade the node is to upgrade selected modules by cascading another module from a spare, or expansion output port, as shown in Figure 26.

Figure 26 shows a somewhat similar arrangement to Figure 24, and has an input module 860, with an input 861, five outputs 862-6, an optical amplifier 870 and an intermediate module 880 receiving the output of the optical

amplifier 870 and providing four outputs 881-4. The input module has three outputs 862-4 to existing output modules, fourth output 865 to the optical amplifier 870 and fifth output as a drop output. The first to third outputs 881-3 of the intermediate module 880 connect to new or later output modules.

The advantage of this third way is that service interruption is not required during installation.

The smallest node can have as few as two modules, which would act as an add/drop node. Several pairs of such modules can service a stacked set of rings, allowing interconnection between different rings. Adjacent rings can also be interconnected. A hybrid ring/mesh network can be created. Hence the same modular system can be used for ring networks, mesh networks and mixes of the two. It can also allow re-use of existing plant and allow an add/drop node to grow and evolve into a wavelength-routing cross-connect.

It will be clear to those skilled in the art that the use of reflective SLMs may allow optical folding to be accomplished and provide a compact system. Thus folding mirrors which may be found in some systems are replaced by SLMs that serve the dual function of folding and performance management for the system. The performance management may include managing direction change, focus correction, correction of non-focus aberration, power control and sampling. When taken together with the controller and sensors, the SLM can then act as an intelligent mirror.

As an example, this application of SLMs would be attractive in the context of free-space wavelength demultiplexers as it would help to suppress the problems associated with long path lengths.

Another example is to provide correction for alignment tolerances and manufacturing tolerances in systems requiring alignment between fibre arrays and lens arrays. In particular focal length errors in the lenses (due to chromatic aberration or manufacturing tolerance) can be compensated by focus correction at the SLM or SLMs, while transverse misalignment between a fibre and lens which leads to an error in the beam direction after the lens, can be compensated by beam deflection at the SLM or SLMs.

It will also be clear to those skilled in the art that although the described embodiments refer to routing in the context of one-to-one, it would also be possible to devise holograms for multicast and broadcast, i.e. one-to-many and one-to-all, if desired.

Although the invention has been described with reference to a number of embodiments, it will be understood that the invention is not limited to the described details. The skilled artisan will be aware that many alternatives may be employed within the general concepts of the invention as defined in the appended claims.

PT20 Rec'd PCT/PTO 26 FEB 2004

TRANSMITTAL LETTER TO THE UNITED STATES DESIGNATED/ELECTED OFFICE (DO/EO/US) CONCERNING A FILING UNDER 35 U.S.C. 371	ATTORNEY 'S DOCKET NUMBER 3274.1003-000
	U.S. APPLICATION NO. (If known, see 37 CFR 1.5) 10/487810

INTERNATIONAL APPLICATION NO.	INTERNATIONAL FILING DATE	PRIORITY DATE CLAIMED
PCT/GB02/04011	02 September 2002 (02.09.02)	03 September 2001 (03.09.01)

TITLE OF INVENTION
OPTICAL PROCESSING

APPLICANT(S) FOR DO/EO/US
Melanie Holmes

Applicant herewith submits to the United States Designated/Elected Office (DO/EO/US) the following items and other information:

1. [X] This is a **FIRST** submission of items concerning a filing under 35 U.S.C. 371.
2. [ ] This is a **SECOND** or **SUBSEQUENT** submission of items concerning a filing under 35 U.S.C. 371.
3. [ ] This is an express request to begin national examination procedures (35 U.S.C. 371(f)). The submission must include items (5), (6), (9) and (21) indicated below.
4. [X] The US has been elected (Article 31).
5. [X] A copy of the International Application as filed (35 U.S.C. 371(c)(2))
   a. [X] is attached hereto (required only if not communicated by the International Bureau).
   b. [ ] has been communicated by the International Bureau.
   c. [ ] is not required, as the application was filed in the United States Receiving Office (RO/US).
6. [ ] An English language translation of the International Application as filed (35 U.S.C. 371(c)(2)).
   a. [ ] is attached hereto.
   b. [ ] has been previously submitted under 35 U.S.C. 154(d)(4).
7. [X] Amendments to the claims of the International Application under PCT Article 19 (35 U.S.C. 371(c)(3))
   a. [ ] are attached hereto (required only if not communicated by the International Bureau).
   b. [ ] have been communicated by the International Bureau.
   c. [ ] have not been made; however, the time limit for making such amendments has NOT expired.
   d. [X] have not been made and will not be made.
8. [ ] An English language translation of the amendments to the claims under PCT Article 19 (35 U.S.C. 371 (c)(3)).
9. [ ] An oath or declaration of the inventor(s) (35 U.S.C. 371(c)(4)).
10. [ ] An English language translation of the annexes of the International Preliminary Examination Report under PCT Article 36 (35 U.S.C. 371(c)(5)).

Items 11 to 20 below concern document(s) or information included:

11. [X] An Information Disclosure Statement under 37 CFR 1.97 and 1.98.
12. [ ] An assignment document for recording. A separate cover sheet in compliance with 37 CFR 3.28 and 3.31 is included.
13. [X] A preliminary amendment.
14. [ ] An Application Data Sheet under 37 CFR 1.76.
15. [ ] A substitute specification.
16. [ ] A power of attorney and/or change of address letter.
17. [ ] A computer-readable form of the sequence listing in accordance with PCT Rule 13*ter*.2 and 37 CFR 1.821 - 1.825.
18. [ ] A second copy of the published international application under 35 U.S.C. 154(d)(4).
19. [ ] A second copy of the English language translation of the international application under 35 U.S.C. 154(d)(4).
20. [X] Other items or information:
    Full copy of the International Search Report
    Postcard Receipt

@PFDesktop\::ODMA/MHODMA/HBSR05;iManage;456223;1

U.S. APPLICATION NO (if known, see 37 CFR 1.5)	INTERNATIONAL APPLICATION NO.	ATTORNEY'S DOCKET NUMBER
10487810	PCT/GB02/04011	3274.1003-000

21. [X] The following fees are submitted:		CALCULATIONS PTO USE ONLY	
BASIC NATIONAL FEE (37 CFR 1.492 (a) (1) - (5)):			
Neither international preliminary examination fee (37 CFR 1.482) nor international search fee (37 CFR 1.445(a)(2)) paid to USPTO and International Search Report not prepared by the EPO or JPO	**$1080.00**		
International preliminary examination fee (37 CFR 1.482) not paid to USPTO but International Search Report prepared by the EPO or JPO.	**$920.00**		
International preliminary examination fee (37 CFR 1.482) not paid to USPTO but international search fee (37 CFR 1.445(a)(2)) paid to USPTO.	**$770.00**		
International preliminary examination fee (37 CFR 1.482) paid to USPTO but all claims did not satisfy provisions of PCT Article 33(1)-(4).	**$730.00**		
International preliminary examination fee (37 CFR 1.482) paid to USPTO and all claims satisfied provisions of PCT Article 33(1)-(4).	**$100.00**		
ENTER APPROPRIATE BASIC FEE AMOUNT =		$920.00	
Surcharge of **$130.00** for furnishing the oath or declaration later than 30 months from the earliest claimed priority date (37 CFR 1.492(e)).		$	

CLAIMS	NUMBER FILED	NUMBER EXTRA	RATE	$	
Total claims	28 - 20 =	8	x **$18.00**	$144	
Independent claims	13 - 3 =	10	x **$86.00**	$860	
MULTIPLE DEPENDENT CLAIM(S) (if applicable)			+ **$290.00**	$	
TOTAL OF ABOVE CALCULATIONS =				$1,924	
[ ] Applicant claims small entity status. See 37 CFR 1.27. The fees indicated above are reduced by 1/2.				$	
SUBTOTAL =				$1924	
Processing fee of **$130.00** for furnishing the English translation later than 30 months from the earliest claimed priority date (37 CFR 1.492(f)).				$	
TOTAL NATIONAL FEE =				$1,924	
Fee for recording the enclosed assignment (37 CFR 1.21(h)). The assignment must be accompanied by an appropriate cover sheet (37 CFR 3.28, 3.31). **$40.00** per property +				$	
TOTAL FEES ENCLOSED =				$1,924	
				Amount to be refunded:	$
				charged:	$

a. [X] A check in the amount of $1,924.00 to cover the above fees is enclosed.

b. [ ] Please charge my Deposit Account No. in the amount of $[ ] to cover the above fees. A duplicate copy of this sheet is enclosed.

c. [X] The Commissioner is hereby authorized to charge any additional fees which may be required, or credit any overpayment to Deposit Account No. 08-0380. A duplicate copy of this sheet is enclosed.

NOTE: Where an appropriate time limit under 37 CFR 1.495 has not been met, a petition to revive (37 CFR 1.137 (a) or (b)) must be filed and granted to restore the application to pending status.

SEND ALL CORRESPONDENCE TO:

Customer No. 021005
HAMILTON, BROOK, SMITH & REYNOLDS, P.C.
530 Virginia Road
P.O. Box 9133
Concord, MA 01742-9133

SIGNATURE

Timothy J. Meagher
NAME

39,302
REGISTRATION NUMBER

@PFDesktop\::ODMA/MHODMA/HBSR05;iManage;456223;1

@PFDesktop\::ODMA/MHODMA/HE[redacted]5;iManage;455822;1
TJM/jk
02/26/04

PATENT APPLICATION
DOCKET NO.: 3274.1003-000

IAP12 Rec'd PCT/PTO 26 FEB 2004

IN THE UNITED STATES RECEIVING OFFICE (RO/US)
Designated/Elected Office (DO/EO/US)

U.S. National Stage of International Application No.:	PCT/GB02/04011
International Filing Date:	2 September 2002
Earliest Priority Date:	3 September 2001
Applicants:	Melanie Holmes
Title:	OPTICAL PROCESSING
Attorney's Docket No.:	3274.1003-000

Date: 26 February 2004

EXPRESS MAIL LABEL NO. EV 214917708 US

INFORMATION DISCLOSURE STATEMENT

Mail Stop PCT
Commissioner for Patents
P.O. Box 1450
Alexandria, VA 22313-1450

Sir:

This Information Disclosure Statement is submitted:

[ ] under 37 CFR 1.129(a), or
(First/Second submission after Final Rejection)

[X] under 37 CFR 1.97(b), or
(Within any one of the following time periods: three months of filing national application (other than a CPA) or date of entry of the national stage in an international application; or before the mailing date of a first office action on the merits in a non-provisional application, including a CPA, or a Request for Continued Examination).

[ ] under 37 CFR 1.97(c) together with either:

[ ] a Statement under 37 CFR 1.97(e), as checked below, or

[ ] a $180.00 fee under 37 CFR 1.17(p), or
(After the 37 CFR 1.97(b) time period, but before final action or notice of allowance, whichever occurs first)

[ ] under 37 CFR 1.97(d) together with:

[ ] a Statement under 37 CFR 1.97(e), as checked below, and

[ ] a $180.00 fee under 37 CFR 1.17(p), or
(Filed after final action or notice of allowance, whichever occurs first, but on or before payment of the issue fee)

[ ] under 37 CFR 1.97(i):
Applicant requests that the IDS and cited reference(s) be placed in the application filewrapper.
(Filed after payment of issue fee)

Statement Under 37 CFR 1.97(e)

[ ] Each item of information contained in this Information Disclosure Statement was first cited in any communication from a foreign patent office in a counterpart foreign application not more than three months prior to the filing of this Information Disclosure Statement; or

[ ] No item of information contained in this Information Disclosure Statement was cited in a communication from a foreign patent office in a counterpart foreign application, and, to the knowledge of the undersigned, after making reasonable inquiry, no item of information contained in the information disclosure statement was known to any individual designated in 37 CFR 1.56(c) more than three months prior to the filing of this Information Disclosure Statement.

Statement Under 37 CFR 1.704(d) (Patent Term Adjustment)
Applies to original applications (other than design) filed on or after May 29, 2000

[ ] Each item of information contained in the Information Disclosure Statement was cited in a communication from a foreign patent office in a counterpart application and this communication was not received by any individual designated in § 1.56(c) more than thirty days prior to the filing of the Information Disclosure Statement.

[X] Enclosed herewith is form PTO-1449:

[X] Copies of the cited references are enclosed.

[ ] Since this application was filed after June 30, 2003, copies of issued U.S. patents and published U.S. applications are not required and are not being provided.

[ ] Copies of the cited references are enclosed except those entered in prior application, U.S. Application No. [ ], to which priority under 35 U.S.C. 120 is claimed. [The earlier application contains copies of the cited references.]

[X] The listed references, AA, AB, AL-AO and AR-AT, were cited in the enclosed International Search Report in a counterpart foreign application.

[ ] The "concise explanation" requirement (non-English references) for reference(s) [ ] under 37 CFR 1.98(a)(3) is satisfied by:

[ ] the explanation provided on the attached sheet.

[ ] the explanation provided in the Specification.

[ ] submission of the enclosed International Search Report.

[ ] submission of the enclosed English-language version of a foreign Search Report and/or foreign Office Action.

[ ] the enclosed English language abstract.

[ ] Applicant requests that the following non-published pending applications be considered:

Examiner's Initials

_____ U.S. Patent Application No. [ ], by [inventor(s)], filed [ ], Docket No.: [ ]

_____ U.S. Patent Application No. [ ], by [inventor(s)], filed [ ], Docket No.: [ ]

_____ U.S. Patent Application No. [ ], by [inventor(s)], filed [ ], Docket No.: [ ]

_____ _____

Examiner Date

[ ] A copy of each above-cited application, including the current claims, is enclosed.

[ ] A copy of each above-cited application, including the current claims, is enclosed, except those entered in prior application, U.S. Application No. [ ], to which priority under 35 U.S.C. 120 is claimed.

The Examiner is requested to return a copy of the above list of pending applications indicating which references were considered with the next office communication.

It is requested that the information disclosed herein be made of record in this application.

Method of payment:

[ ] A check for the fee noted above is enclosed, or the fee has been included in the check with the accompanying Reply. A copy of this Statement is enclosed.

[ ] Please charge Deposit Account 08-0380 in the amount of $[ ]. A copy of this Statement is enclosed.

[X] Please charge any deficiency in fees and credit any overpayment to Deposit Account 08-0380.

Respectfully submitted,

HAMILTON, BROOK, SMITH & REYNOLDS, P.C.

By _____

Timothy J. Meagher
Registration No.: 39,302
Telephone: (978) 341-0036
Facsimile: (978) 341-0136

Concord, MA 01742-9133

Dated: 2/26/04

PTO-1449 REPRODUCED	ATTORNEY DOCKET NO. 3274.1003-000	APPLICATION NO. 10/787810
INFORMATION DISCLOSURE CITATION IN AN APPLICATION	FIRST NAMED INVENTOR Melanie Holmes	FILING DATE
February 25, 2004	EXAMINER	CONFIRMATION NO. / GROUP
(Use several sheets if necessary)		

U.S. PATENT DOCUMENTS

EXAMINER INITIAL	REF. NO.	DOCUMENT NUMBER Number-Kind Code (if known)	ISSUE DATE / PUBLICATION DATE MM-DD-YYYY	NAME OF PATENTEE OR APPLICANT OF CITED DOCUMENT
	AA	5,107,359	04-21-92	Ohuchida
	AB	5,539,543	07-23-96	Liu, et al.
	AC			
	AD			
	AE			
	AF			
	AG			
	AH			
	AI			
	AJ			
	AK			
	AA2			
	AB2			
	AC2			
	AD2			
	AE2			
	AF2			
	AG2			
	AH2			
	AI2			
	AJ2			
	AK2			
	AA3			
	AB3			
	AC3			

EXAMINER	DATE CONSIDERED

@PFDesktop\::ODMA/MHODMA/HBSR05;iManage;455966;1

PTO-1449 REPRODUCED	ATTORNEY DOCKET NO. 3274.1003-000	APPLICATION NO. 10/487810	
INFORMATION DISCLOSURE CITATION IN AN APPLICATION	FIRST NAMED INVENTOR Melanie Holmes	FILING DATE	
February 25, 2004	EXAMINER	CONFIRMATION NO.	GROUP
(Use several sheets if necessary)			

FOREIGN PATENT DOCUMENTS

		DOCUMENT NUMBER Country Code-Number-Kind Code (if known)	DATE MM-DD-YYYY	NAME OF PATENTEE OR APPLICANT OF CITED DOCUMENT	TRANSLATION YES	TRANSLATION NO
	AL	WO 01 90823 A1	11-29-01	Intelligent Pixels, Inc.		
	AM	WO 01 25848 A2	04-12-01	Thomas Swan & Co., Ltd.		
	AN	WO 01 25840 A1	04-12-01	Thomas Swan & Co., Ltd.		
	AO	WO 02 101451 A1	12-19-02	Honeywell International, Inc.		
	AP	WO 02 079870 A2	10-10-02	Thomas Swan & Co., Ltd.		
	AQ	EP 1 050 775 A1	11-08-00	Thomas Swan & Co., Ltd.		
	AL2	EP 1 053 501 B1	07-23-03	Thomas Swan & Co., Ltd.		
	AM2					
	AN2					
	AO2					
	AP2					
	AQ2					
	AL3					
	AM3					
	AN3					
	AO3					
	AP3					
	AQ3					
	AL4					
	AM4					
	AN4					
	AO4					
	AP4					
	AQ4					

EXAMINER	DATE CONSIDERED

@PFDesktop\::ODMA/MHODMA/HBSR05;iManage;455966;1

PTO-1449 REPRODUCED	ATTORNEY DOCKET NO. 3274.1003-000	APPLICATION NO. 10/487810
INFORMATION DISCLOSURE CITATION IN AN APPLICATION	FIRST NAMED INVENTOR Melanie Holmes	FILING DATE
February 25, 2004	EXAMINER	CONFIRMATION NO. / GROUP
(Use several sheets if necessary)		

		OTHER DOCUMENTS *(Including Author, Title, Date, Pertinent Pages, Etc.)*
	AR	Mears, R. J., et al., "Telecommunications Applications of Ferroelectric Liquid-Crystal Smart Pixels," IEEE Journal of Selected Topics in Quantum Electronics, Vol. 2, No. 1, April 1996, pp. 35-46.
	AS	Mears, R. J., et al., "WDM Channel Management Using Programmable Holographic Elements," IEE Colloquim on Multiwavelength Optical Networks: Devices, Systems and Network Implementations," IEE, London, GB, 18 June 1998, pp. 11-1 - 11-6.
	AT	Pan, Ci-Ling, et al., "Tunable Semiconductor Laser with Liquid Crystal Pixel Mirror in Grating-Loaded External Cavity," Electronics Letters, IEE Stevenage, GB, Vol. 35, No. 17, 19 August 1999, pp. 1472-1473.
	AU	
	AV	
	AW	
	AX	
	AY	
	AZ	
	AR2	
	AS2	
	AT2	
	AU2	
	AV2	
	AW2	
	AY2	

EXAMINER	DATE CONSIDERED

@PFDesktop\::ODMA/MHODMA/HBSR05;iManage;455966;1

PCT/GB2002/004011
10/487810
Rec'd PCT/PTO 26 FEB 2004

The Patent Office
Concept House
Cardiff Road
Newport
South Wales
NP10 8QQ

PRIORITY DOCUMENT
SUBMITTED OR TRANSMITTED IN
COMPLIANCE WITH
RULE 17.1(a) OR (b)

REC'D 26 SEP 2002
WIPO PCT

I, the undersigned, being an officer duly authorised in accordance with Section 74(1) and (4) of the Deregulation & Contracting Out Act 1994, to sign and issue certificates on behalf of the Comptroller-General, hereby certify that annexed hereto is a true copy of the documents as originally filed in connection with the patent application identified therein.

In accordance with the Patents (Companies Re-registration) Rules 1982, if a company named in this certificate and any accompanying documents has re-registered under the Companies Act 1980 with the same name as that with which it was registered immediately before re-registration save for the substitution as, or inclusion as, the last part of the name of the words "public limited company" or their equivalents in Welsh, references to the name of the company in this certificate and any accompanying documents shall be treated as references to the name with which it is so re-registered.

In accordance with the rules, the words "public limited company" may be replaced by p.l.c., plc, P.L.C. or PLC.

Re-registration under the Companies Act does not constitute a new legal entity but merely subjects the company to certain additional company law rules.

Signed

Dated 10 September 2002

BEST AVAILABLE COPY

atents Form 1/77

Pat. Act 1977
(Rule 16)

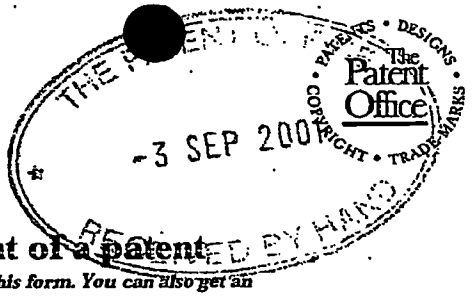

1/77

Request for grant of a patent

(See the notes on the back of this form. You can also get an explanatory leaflet from the Patent Office to help you fill in this form)

The Patent Office

Cardiff Road
Newport
South Wales
NP10 8QQ

04SEP01 E657226-1 D01177
P01/7700 0.00-0121308.1

1. Your reference — WJN/P8591GB

2. Patent application number *(The Patent Office will fill in this part)* — **0121308.1**

03 SEP 2001

3. Full name, address and postcode of the or of each applicant *(underline all surnames)*

Thomas Swan & Co. Ltd.
Crookhall
Consett
Co. Durham
DH8 7ND

Patents ADP number *(if you know it)* 7602428001

If the applicant is a corporate body, give the country/state of its incorporation — United Kingdom

4. Title of the invention — OPTICAL PROCESSING

5. Name of your agent *(if you have one)* — W. H. Beck, Greener & Co.

"Address for service" in the United Kingdom to which all correspondence should be sent *(including the postcode)*

W. H. Beck, Greener & Co.
7 Stone Buildings
Lincoln's Inn
London WC2A 3SZ

Patents ADP number *(if you know it)* — 323001

6. If you are declaring priority from one or more earlier patent applications, give the country and the date of filing of the or of each of these earlier applications and *(if you know it)* the or each application number

Country	Priority application number *(if you know it)*	Date of filing *(day / month / year)*

7. If this application is divided or otherwise derived from an earlier UK application, give the number and the filing date of the earlier application

Number of earlier application	Date of filing *(day / month / year)*

8. Is a statement of inventorship and of right to grant of a patent required in support of this request? *(Answer 'Yes' if:*

a) any applicant named in part 3 is not an inventor, or
b) there is an inventor who is not named as an applicant, or
c) any named applicant is a corporate body.
See note (d))

Yes

Patents Form 1/77

TS0000817

Patents Form 1/77

9. Enter the number of sheets for any of the following items you are filing with this form. Do not count copies of the same document

Continuation sheets of this form	
Description	59
Claim(s)	5
Abstract	1
Drawing(s)	13 + 13 RN

10. If you are also filing any of the following, state how many against each item.

Priority documents	
Translations of priority documents	
Statement of inventorship and right to grant of a patent *(Patents Form 7/77)*	
Request for preliminary examination and search *(Patents Form 9/77)*	
Request for substantive examination *(Patents Form 10/77)*	
Any other documents *(please specify)*	

11. I/We request the grant of a patent on the basis of this application.

Signature Withers & Rogers LLP Date 03.09.01

12. Name and daytime telephone number of person to contact in the United Kingdom

Mr. William J. Neobard - (020) 7405 0921

Warning

After an application for a patent has been filed, the Comptroller of the Patent Office will consider whether publication or communication of the invention should be prohibited or restricted under Section 22 of the Patents Act 1977. You will be informed if it is necessary to prohibit or restrict your invention in this way. Furthermore, if you live in the United Kingdom, Section 23 of the Patents Act 1977 stops you from applying for a patent abroad without first getting written permission from the Patent Office unless an application has been filed at least 6 weeks beforehand in the United Kingdom for a patent for the same invention and either no direction prohibiting publication or communication has been given, or any such direction has been revoked.

Notes

a) If you need help to fill in this form or you have any questions, please contact the Patent Office on 08459 500505.

b) Write your answers in capital letters using black ink or you may type them.

c) If there is not enough space for all the relevant details on any part of this form, please continue on a separate sheet of paper and write "see continuation sheet" in the relevant part(s). Any continuation sheet should be attached to this form.

d) If you have answered 'Yes' Patents Form 7/77 will need to be filed.

e) Once you have filled in the form you must remember to sign and date it.

f) For details of the fee and ways to pay please contact the Patent Office.

OPTICAL PROCESSING

Field of the invention

The present invention relates to the general field of controlling one or more light beams by the use of electronically controlled devices. More particularly, but not exclusively, the field of application is mainly envisaged as being to communications and like devices. In such devices reconfiguration between inputs and outputs is likely, and stability of performance is a significant requirement.

Background of the invention

It has previously been proposed to use so-called spatial light modulators to control the routing of light beams within an optical system, for instance from selected ones of a number of input optical fibres to selected ones of output fibres. Although our earlier patent applications have addressed a number of issues, including architectures aimed at reducing crosstalk, a problem has been to find a simple method of controlling the SLM.

Optical systems are subject to performance impairments resulting from aberrations, phase distortions and component misalignment. An example is a multiway fibre connector, which although conceptually simple can often be a critical source of system failure or insertion loss due to the very tight alignment tolerances for optical fibres, especially for single-mode optical fibres. Every time a fibre connector is connected, it may provide a different alignment error. Another example is an optical switch in which aberrations, phase distortions and component misalignments result in poor optical coupling efficiency into the intended output optical fibres. This in turn may lead to high insertion loss. The aberrated propagating waves may diffract into intensity

TS0000819

fluctuations creating significant unwanted coupling of light into other output optical fibres, leading to levels of crosstalk that impede operation. In some cases, particularly where long path lengths are involved, the component misalignment may occur due to ageing or temperature effects.

Some prior systems seek to meet such problems by use of expensive components. For example in a communications context, known free-space wavelength multiplexers and demultiplexers use expensive thermally stable opto-mechanics to cope with the problems associated with long path lengths.

Certain optical systems have a requirement for reconfigurability. Such reconfigurable systems include optical switches, add-drop multiplexers and other optical routing systems where the mapping of signals from input ports to output ports is dynamic. In such systems the path-dependent losses, aberrations and phase distortions encountered by optical beams may vary from beam to beam according to the route taken by the beam through the system. Therefore the path-dependent loss, aberrations and phase distortions may vary for each input beam or as a function of the required output port.

The prior art does not adequately address this situation.

Other optical systems are static in terms of input/output configuration. In such systems, effects such as assembly errors, manufacturing tolerances in the optics and also changes in the system behaviour due to temperature and ageing, create the desirability for dynamic direction control, aberration correction, phase distortion compensation or misalignment compensation.

It should be noted that the features of dynamic direction control, phase distortion compensation and misalignment control are not restricted to systems using input beams coming from optical fibres. Such features may also be advantageous in a reconfigurable optical system. Another static system in which dynamic control of phase distortion, direction and (relative) misalignment would be advantageous is one in which the quality and/or position of the input beams is time-varying.

Often the input and output beams for optical systems contain a multiplex of many optical signals at different wavelengths, and these signals may need to be separated and adaptively and individually processed inside the system. Sometimes, although the net aim of a system is not to separate optical signals according to their wavelength and then treat them separately, to do so increases the wavelength range of the system as a whole. Where this separation is effected, it is often advantageous for the device used to route each channel to have a low insertion loss and to operate quickly.

It is an aim of some aspects of the present invention at least partly to mitigate difficulties of the prior art.

It is desirable for certain applications that a method or device for addressing these issues should be polarisation-independent, or have low polarisation-dependence. It is also desirable for certain applications to provide built-in intelligence, as it leads to more compact and ultimately low-cost devices.

In the present patent application, the term "SLM" is used to signify a pixellated multiple phase liquid crystal over silicon spatial light modulator, unless the context specifies otherwise.

SLMs have been proposed for use as adaptive optical components in the field of astronomical devices, for example as wavefront correctors. In this field of activity, the constraints are different to the present field -for example in communication and like devices, the need for consistent performance is paramount if data is to be passed without errors. Communication and like devices are desirably inexpensive, and desirably inhabit and successfully operate in environments that are not closely controlled. By contrast, astronomical devices may be used in conditions more akin to laboratory conditions, and cost constraints are less pressing. Astronomical devices are unlikely to need to select successive routings of light within a system, and variations in performance may be acceptable.

Summary of the invention

According to a first aspect of the invention there is provided a method of controlling a light beam using a spatial light modulator (SLM) having a plurality of pixels, the method comprising:

determining a desired phase modulation characteristic across an array of said pixels for achieving the desired control of said beam;

controlling said pixels to provide a phase modulation derived from the desired phase modulation, wherein the controlling step comprises

providing a population of available phase modulation levels for each pixel, said population comprising a discrete number of said phase modulation levels;

on the basis of the desired phase modulation, a level selecting step of selecting for each pixel a respective one of said phase modulation levels; and

causing each said pixel to provide the respective one of said phase modulation levels.

The SLM may be a multiple phase liquid crystal over silicon spatial light modulator having plural pixels, of a type having an integral wave plate and a reflective element, such that successive passes of a beam through the liquid crystal subject each orthogonally polarised component to a substantially similar electrically-set phase change.

If a non-integral wave plate is used instead, a beam after reflection and passage through the external wave plate will not pass through the same zone of the SLM, unless it is following the input path, in which case it will re-enter the input fibre.

The use of the wave plate and the successive pass architecture allows the SLM to be substantially polarisation independent.

In one embodiment the desired phase modulation at least includes a linear component.

Linear phase modulation, or an approximation to linear phase modulation may be used to route a beam of light, i.e. to select a new direction of propagation for the beam. In many routing applications, two SLMs are used in series, and the displayed information on the one has the inverse effect to the information displayed on the other. Since the information represents phase change data, it may be regarded as a hologram. Hence an output SLM may display a hologram

that is the inverse of that displayed on the input SLM. Routing may also be "one-to-many" (i.e. multicasting) or "one-to-all" (i.e. broadcasting) rather than the more usual one-to-one in many routing devices. This may be achieved by correct selection of the relevant holograms.

Preferably the linear modulation is resolved mod 2pi to provide a periodic ramp.

In another embodiment the desired phase modulation includes a non-linear component.

Preferably the method further comprises selecting from said plurality of pixels, an array of pixels for incidence by said light beam.

The size of a selected array may vary from switch to switch according to the physical size of the switch and of the pixels. However, a typical switch may have pixel arrays of between 100 and 200 square.

In one embodiment the level-selecting step comprises determining the desired level of phase modulation at a predetermined point on each pixel and choosing for each pixel, the available level which corresponds most closely to the desired level.

In another embodiment, the level-selecting step comprises determining a subset of the available levels, which provides the best fit to the desired characteristic.

The subset may comprise a subset of possible levels for each pixel.

Alternatively the subset may comprise a set of level distributions, each having a particular level for each pixel.

In one embodiment, the causing step includes providing a respective voltage to an electrode of each pixel, wherein said electrode extends across substantially the whole of the pixel.

Preferably again the level selecting step comprises selecting the level by a modulo 2pi comparison with the desired phase modulation. The actual phase excursion may be from A to A+2pi where A is an arbitrary angle.

Preferably the step of determining the desired phase modulation comprises calculating a direction change of a beam of light.

Conveniently, after the step of calculating a direction change, the step of determining the desired phase modulation further comprises iteratively correcting the phase modulation obtained from the calculating step to obtain an improved result.

Advantageously, the iterative correction step is adaptive.

In another embodiment the step of determining the desired phase modulation is retroactive, whereby parameters of the phase modulation are varied in response to a sensed error to reduce the error.

A first class of embodiments relates to the simulation/ synthesis of generally corrective elements. In some members of the first class, the method of the invention is performed

to provide a device, referred to hereinafter as an accommodation element for altering the focus of the light beam.

An example of an accommodation element is a lens. An accommodation element may also be an anti-astigmatic device, for instance comprising the superposition of two cylindrical lenses at arbitrary orientations.

In other members of the first class, the method of the invention is performed to provide an aberration correction device for correcting greater than quadratic aberrations.

Preferably the array-selecting step selects the array of pixels in dependence on the predicted path of a beam.

Advantageously, after the array is selected using the predicted path, adaptive methods are used to determine whether the predicted path is correct, and if not to select a different pixel array

An element of this type may be used in a routing device to compensate for aberrations, phase distortions and component misalignment in the system. By providing sensing devices a controller may be used to retroactively control the element and the element may maintain an optimum performance of the system.

In one embodiment of this first class, the method includes both causing the SLM to route a beam and causing the SLM to emulate a corrective element to correct for errors, whereby the SLM receives a discrete approximation of the combination of both a linear phase modulation applied to it

to route the beam and a non-linear phase modulation for said corrections.

Synthesising a lens using an SLM can be used to change the position of the beam focused spot and therefore correct for a position error or manufacturing tolerance in one or more other lenses or reflective (as opposed to transmissive) optical elements such as a curved mirror.

The method of the invention may be used to correct for aberrations such as field curvature in which the output 'plane' of the image(s) from an optical system is curved, rather than flat.

In another embodiment of the first class, intelligence may be integrated with sensors that detect the temperature changes and apply data from a look-up table to apply corrections.

In yet another embodiment of this class, misalignment and focus errors are detected by measuring the power coupled into strategically placed monitor devices, such as monitor sensors or monitor fibres. Iterative adaptive changes may then be made to the compensating holograms formed as a result of the discrete approximations of the non-linear modulation until the system alignment is measured to be optimised.

In embodiments where the method provides routing functions by approximated linear modulation, adaptation of non-linear modulation due to changes in the path taken through the system desirably takes place on a timescale equivalent to that required to change the hologram routing, i.e. of the order of milliseconds.

A control algorithm may use one or more of several types of compensation.

In one embodiment a look-up table is used with pre-calculated 'expected' values of the compensation taking account of the different routes through the system.

In another embodiment the system is trained before first being operated, using iterative changes to the compensating holograms to learn how the system is misaligned.

A further embodiment employs intelligence attached to the monitor fibres for monitoring and calculation of how these compensating holograms should adapt with time to accommodate changes in the system alignment. This is achieved in some embodiments by integrating circuitry components into the silicon backplane of the SLM.

In many optical systems there is a need to control and adapt the power or shape of an optical beam as well as its direction or route through the optical system. In communications applications, power control is required for network management reasons. In general, optical systems require the levelling out or compensation for path and wavelength-dependent losses inside the optical system. It is usually desirable that power control should not introduce or accentuate other performance impairments.

Thus in a second class of embodiments, the modulation applied is modified for controlling the attenuation of an optical channel subjected to the SLM.

In one particular embodiment, the ideal value of phase modulation is calculated for every pixel, and then multiplied

TS0000828

by a coefficient having a value between 0 and 1, selected according to the desired attenuation and the resultant is compared to the closest available phase level to provide the value applied to the pixels.

In another embodiment, the method further comprises selecting by a discrete approximation to a linear phase modulation, a routing hologram for display by the SLM whereby the beams may be correctly routed; selecting by a discrete approximation to a non-linear phase modulation, a further hologram for separating each beam into main and subsidiary beams, wherein the main beam is routed through the system and the or each subsidiary beam is diffracted out of the system; combining the routing and further holograms together to provide a resultant hologram; and causing the SLM to provide the resultant hologram.

The non-linear phase modulation may be oscillatory.

In yet another embodiment, the method further comprises selecting by a discrete approximation to a linear phase modulation, a routing hologram for display by the SLM whereby the beams may be correctly routed; selecting by a discrete approximation to a non-linear phase modulation, a further hologram for separating each beam into main and subsidiary beams, wherein the main beam is routed through the system and at least one subsidiary beam is incident on an output at an angle such that its contribution is insignificant; combining the routing and further holograms together to provide resultant hologram; and causing the SLM to display the resultant hologram.

The non-linear phase modulation may be oscillatory.

In a closely allied class of embodiments, light may be selectively routed to a sensor device for monitoring the light in the system. The technique used may be a power control technique in which light diverted from the beam transmitted through the system to reduce its magnitude is made incident on the sensor device.

In another class of embodiments, a non-linear phase modulation profile is selected to provide beam shaping, for example so as to reduce cross-talk effects due to width clipping. This may use a pseudo amplitude modulation technique.

In a further class of embodiments, the method uses a non-linear modulation profile chosen to provide wavelength dependent effects.

The light may be at a telecommunications wavelength, for example 850 nm, 1300 nm or in the range 1530 nm to 1620 nm.

Brief description of the drawings

Exemplary embodiments of the invention will now be described with reference to the accompanying drawings in which:

Figure 1 shows a cross-sectional view through an exemplary SLM suitable for use in the invention;

Figure 2 shows a sketch of a routing device in which a routing SLM is used additionally to provide correction for performance impairment due to misalignment;

Figure 3 shows a sketch of a routing device in which a routing SLM is used to route light beams and an additional SLM provides correction for performance impairment due to misalignment;

TS0000830

Figure 4 shows a block diagram of an adaptive corrective SLM;

Figure 5 shows an adaptive optical system using three SLMs;

Figure 6 shows a partial block diagram of a routing device with a dual function SLM and control arrangements;

Figure 7 shows a block diagram of an SLM for controlling the power transferred in an optical system;

Figure 8a shows a diagram of phase change vs. distance of a hologram for minimum attenuation;

Figure 8b shows a diagram of phase change vs. distance of a hologram enabling attenuation of the signal;

Figure 9 shows a power control system;

Figure 10 shows a phasor diagram showing the effect of non-linear oscillatory phase modulation applied to adjacent pixels;

Figure 11 shows a schematic diagram of a part of an optical routing system illustrating the effects of clipping and cross talk;

Figure 12 shows a partial block diagram of a system enabling beams of different wavelength from a composite input beam to be separately controlled before recombination; and

Figure 13 shows a schematic diagram of an add-drop multiplexer using an SLM.

Description of the preferred embodiments

In the various figures, like reference numerals indicate like parts.

The structure and arrangement of polarisation-independent multiple phase liquid crystal over silicon spatial light modulators (SLMs) for routing a light beams using holograms are discussed in our co-pending patent application PCT/ GB00 /03796. Such devices have an insertion

loss penalty due to the dead-space between the pixels. As discussed in our co-pending patent application GB0107742.9, the insertion loss may be reduced significantly by using a reflecting layer inside the substrate positioned so as to reflect the light passing between the pixels back out again.

Referring to Figure 1, an integrated SLM 200 for modulating light 201 of a selected wavelength, e.g. 1.5 μm, consists of a pixel electrode array 230 formed of reflective aluminium. The pixel array, as will later be described acts as a mirror, and disposed on it is a quarter-wave plate 221. A liquid crystal layer 222 is disposed on the quarter-wave plate 221 via an alignment layer (not shown) as is known to those skilled in the art of liquid crystal structures. Over (as shown) the liquid crystal layer 222 are disposed in order a second alignment layer 223, a common ITO electrode layer 224 and an upper glass layer 225. The common electrode layer 224 defines an electrode plane. The pixel electrode array is disposed parallel to the common electrode plane.

The liquid crystal layer 222 has its material aligned such that under the action of a varying voltage between a pixel electrode and the common electrode, the uniaxial axis changes its tilt direction in a plane normal to the electrode plane.

The quarter wave plate 221 is disposed such that light polarised in the plane of tilt of the director is reflected back by the mirror through the SLM with its plane of polarisation perpendicular to the plane of tilt, and vice-versa.

Circuitry, not shown, connects to the pixel electrodes so that different selected voltages are applied between

respective pixel electrodes and the common electrode layer 224.

Consider an arbitrary light beam 201 passing through a given pixel, to which a determined voltage is applied, thus resulting in a selected phase modulation due to the liquid crystal layer over the pixel electrode. Consider first and second orthogonal polarisation components, of arbitrary amplitudes, having directions in the plane of tilt of the director and perpendicular to this plane, respectively. These directions bisect the angles between the fast and slow axes of the quarter-wave plate.

The first component experiences the selected phase change on the inward pass of the beam towards the aluminium layer 230, which acts as a mirror. The second component experiences a fixed, non-voltage dependent phase change.

However, the quarter-wave plate in the path causes polarisation rotation of the first and second components by 90 degrees so that the second polarisation component of the light beam is presented to the liquid crystal for being subjected to the selected phase change on the outward pass of the beam away from the mirror layer 230. The first polarisation component experiences the fixed, non-voltage dependent phase change on the outward pass of the beam. Thus, both of the components experience the same overall phase change contribution after one complete pass through the device, the total contribution being the sum of the fixed, non-voltage dependent phase and the selected voltage dependent phase change.

It is not intended that any particular SLM structure is essential to the invention, the above being only exemplary

and illustrative. The invention may be applied to other devices, provided they are capable of multiphase operation and are at least somewhat polarisation independent at the wavelengths of concern. Other SLMs are to be found in our co-pending applications WO01/25840, EP1050775 and EP1053501 as well as elsewhere in the art.

A particularly advantageous SLM uses a liquid crystal layer configured as a pi cell.

In use, respective blocks of pixels are associated with respective incident light beams, and each block is controlled to display a respective hologram. The hologram is selected to route the beam entering the SLM 200 in a desired direction.

In an embodiment, the SLM is used for routing a beam of light, and in accordance with the invention this is achieved by displaying a linearly changing phase ramp in at least one direction across an array of pixels upon which the beam is incident. The parameters of the ramp depend on the required angle of reflection of the beam of concern. The angle may be a two dimensional angle where the plane common to the direction of the incident light and that of the reflected light is not orthogonal to the SLM.

Assigning x and y co-ordinates to the elements of the SLM, the required amount of angular shift from the specular reflection direction may be resolved into the x and y directions. Then, the required phase ramp for the components is calculated using standard diffraction theory, as a "desired phase profile".

Having established a desired phase modulation characteristic across the array so as to achieve the desired

control of said beam it is then necessary to transform this characteristic into one that can be displayed by the pixels of the SLM. Firstly it should be borne in mind that the circuitry controlling the pixels of an SLM is normally digital. Thus there is only a discrete population of values of phase modulation for each pixel, because of the number of bits used to represent those states.

To allow the pixels of the SLM to display a suitable phase profile, a level selecting operation is performed for each pixel. In one example of this operation, the desired phase modulation is expressed modulo 2pi across the array extent, and the value of the desired mod-2pi modulation is established at the centre of each pixel. Then for each pixel, the available level nearest the desired modulation is ascertained and used to provide the actual pixel voltage. This voltage is applied to the pixel electrode for the pixel of concern.

For small pixels there may be 'edge' effects due to fringing fields between the pixels and the correlations between the director directions in adjacent pixels. In such systems the available phase level nearest to the value of the desired mod-2pi modulation at the centre of each pixel (as described above) should be used as a first approximation. An iterative algorithm is used to calculate the relevant system performance characteristic taking into account these 'edge' effects and to change the applied level in order to optimise the system performance.

"Linear" means that the value of phase across an array of pixels varies linearly with distance from an arbitrary origin, and includes limited linear changes, where upon reaching a maximum phase change at the end of a linear

TS0000835

portion, the phase change reverts to a minimum value before again rising linearly.

Referring to Figure 2, an SLM 10 has operating circuitry 11 having a first control input 12 for routing beams 1,2 from input fibres 3,4 to output fibres 5,6 in a routing device 15.

Beam 1 is incident on, and processed by a first array, or block 13 of pixels, and beam 2 is incident on and processed by a second array, or block 14 of pixels. The operating circuitry responds to a control at the control input to form respective routing holograms on the blocks 13, 14 in accordance with that input. The operating circuitry further has an additional input 16 for modifying the holograms for applying a discrete approximation of a non-linear phase modulation so that the SLM synthesises a corrective optical element such as a lens or higher-order aberration corrector. As will be later described, embodiments may also provide power control (attenuation), sampling and beam shaping by use of the non-linear phase modulation profile. "Non-linear" is intended to signify that the desired phase profile across an array of pixels varies with distance from an arbitrary origin in a curved and/or oscillatory or like manner that is not a linear function of distance. It is not intended that "non-linear" refer to sawtooth or like profiles formed by a succession of linear segments of the same slope mutually separated by "flyback" segments.

The hologram pattern associated with any general non-linear phase modulation $\exp j\phi(u) = \exp j(\phi_0(u) + \phi_1(u) + \phi_3(u) \ldots.)$ where j is the complex operator, can be considered as a product. In this product, the first hologram term in the product $\exp j\ \phi_0(u)$ implements the routing while the second

hologram term exp j $\phi_1(u)$ implements a corrective function providing for example lens simulation and/or aberration correction. The third hologram term exp j $\phi_2(u)$ implements a signal processing function such as sampling and/or attenuation and/or beam shaping. The routing function is implemented as a linear phase modulation while the corrective function includes non-linear terms and the signal processing function includes non-linear oscillatory terms.

Different methods of implementing the combination of these three terms are possible. In one embodiment the total required phase modulation $\phi_0(u) + \phi_1(u) + \phi_2(u)$ including linear routing and corrective function and the signal processing function is resolved modulo 2 pi and approximated to the nearest available phase level before application by the pixels. In another embodiment the summation of the phase modulation required for the linear and corrective function $\phi_0(u) + \phi_1(u)$ is resolved modulo 2 pi and approximated to the nearest phase level in order to calculate a first phase distribution. A second phase distribution $\phi_2(u)$ is calculated to provide sampling and/or attenuation and/or beam shaping. The two phase distributions are then added, re-resolved modulo 2 pi and approximated to the nearest available phase level before application by the pixels. Other methods are also possible.

Mathematically the routing phase modulation, is periodic due to the resolution modulo 2pi and by nature of its linearity.

Therefore the routing phase modulation results in a set of equally spaced diffraction orders. The greater the number of available phase levels the closer the actual phase

modulation to the ideal value and the stronger the selected diffraction order used for routing.

By contrast, the corrective effects are realised by non-linear phase changes $\phi_1(u)$ that are therefore non-periodic when resolved modulo 2pi. This non-periodic phase modulation changes the distribution of the reflected beam about its centre, but not its direction. The combined effect of both linear (routing) and non-periodic phase modulation is to change both the direction and distribution of the beam, as may be shown using the convolution theorem.

The signal processing effects are usually realised by a method equivalent to 'multiplying' the initial routing and/or hologram $\exp j(\phi_0(u)+\phi_1(u))$ by a further hologram $\exp j\ \phi_2(u)$ in which $\phi_2(u)$ is non-linear and oscillatory. Therefore the set of diffraction orders associated with the further hologram create a richer structure of subsidiary beams about the original routed beam, as may be shown using the convolution theorem.

While this explanation is for a one-dimensional phase modulator array the same principle may be applied in 2-D.

Hence in a reconfigurable optical system this non-linear phase modulation may be applied by the same spatial light modulator(s) that route the beam. It will be understood by those skilled in the art that the SLM may have only a single control input and the device have separate processing circuitry for combining control data for routing and control data for corrective effects and signal processing effects to provide an output to control the SLM.

The data may be entered into the SLM bit-wise per pixel so that for each pixel a binary representation of the desired state is applied. Alternatively, the data may be entered in the form of coefficients of a polynomial selected to represent the phase modulation distribution of the pixel array of concern in the SLM. This requires calculating ability of circuitry of the SLM, but reduces the data transfer rates into the SLM. The pixel array of concern could be all of the pixels associated with a particular beam or a subset of these pixels. The phase modulation distribution could be a combined phase modulation distribution for both routing and corrective effects or separate phase modulation distributions for each. Beam shaping, sampling and attenuation phase modulation distributions, as will be described later, can also be included. In some cases it may not be possible to represent the phase modulation distribution as a simple polynomial. This difficulty may be overcome by finding a simple polynomial giving a first approximation to the desired phase modulation distribution. The coefficients of this polynomial are sent to the SLM. A bit-wise correction is sent for each pixel requiring a correction, together with an address identifying the location of the pixel. When the applied distribution is periodic only the corrections for one period need be sent.

The operating circuitry 11 may be discrete from or integral with the SLM, or partly discrete and partly integral.

Referring to Figure 3, a routing device 25 includes a dedicated SLM 20 hereinafter referred to as a "corrective SLM" which synthesises a corrective optical element. As shown in Figure 2, the corrective SLM 20 is used in combination with a routing SLM 21. Although the corrective SLM 20 is

TS0000839

shown disposed upstream of the routing SLM 21, it will be clear to those skilled in the art that it may alternatively be disposed downstream of the routing SLM 21. Equally, it will be clear to those skilled in the art that systems using routing devices other than the routing SLM 21 may benefit from the addition of a corrective SLM.

The routing SLM 21 has operating circuitry 23 receiving routing control data at a routing control input 24, and providing on the SLM 21 sets of holograms for routing the beams 1,2. The corrective SLM 20 has operating circuitry 26 receiving compensation or adaptation data at a control input 27 to cause the SLM 20 to display selected holograms. In this embodiment, the SLM 20 forms a reflective lens.

Synthesising a lens at an SLM in this way can be used to change the position of the beam focused spot and therefore correct for a position error or manufacturing tolerance in one or more other lenses or reflective (as opposed to transmissive) optical elements such as a curved mirror. The synthesised lens can be spherical or aspheric or cylindrical or a superposition of such lenses. Synthesised cylindrical lenses may have arbitrary orientation between their two long axes and the lens focal lengths can both be positive, or both be negative, or one can be positive and the other negative.

To provide a desired phase modulation profile for a lens or curved mirror to compensate for an unwanted deviation from a required system characteristic, the system is modelled without the lens/mirror. Then a lens/mirror having the correction to cancel out the deviation is simulated, and the parameters of the lens/mirror are transformed so that when applied to an SLM the same effect is achieved. To provide a desired phase modulation profile for other aberrations the

TS0000840

system may be modelled to calculate the phase distortion across the SLM, compared to the ideal phase distribution. The ideal phase distribution may be found by modelling the system 'backwards' from the desired output beam while the actual phase distribution may be found by modelling the system forwards from the input beam. The desired corrective profile is the conjugate phase of the phase distortion. Further, given a real system a sampling method (as will be described later) may be used to direct a fraction of the beam towards a wavefront sensor that may assess the beam. So far the process is deterministic. Then the changes are applied to the real system, and perturbations on the parameters are applied while monitoring the wavefront sensor and/or the input/output state, so as to determine whether an optimum configuration is achieved. If not, the parameters are iteratively changed until a best case is achieved. Any known optimising technique may be used. It is preferred to provide a reasonable starting point by deterministic means, as otherwise local non-optimum performance maxima may be used instead of the true optimum

The method or device of the invention may be used to correct for aberrations such as field curvature in which the output 'plane' of the image(s) from an optical system is curved, rather than flat.

Referring now to Figure 4, the corrective SLM 20, used purely for synthesising a corrective element, has operating circuitry 125, and further comprises processing circuitry 122 and temperature sensors 123. In this embodiment the operating circuitry, temperature sensors and processing circuitry are integrated on the same structure as the rest of the SLM, but this is not critical to the invention. Associated with the processing circuitry is a store 124 into which is programmed a lookup table. The sensors detect temperature changes in the

system as a whole and in the SLM, and in response to changes access the look up table via the processing circuitry 122 to apply corrections to the operating circuitry. These corrections affect the holograms displayed on the blocks 13, 14 of pixels. The sensors may also be capable of correction for temperature gradients.

This technique may also be applied to an SLM used for routing.

Equally, even if in use the SLM forms a corrective element by having non-linear phase modulation applied across it, if it is operated in separate training and use phases, it may be desirable while training for the SLM to route as well. In this case the SLM scans the processed beam over a detector or routes the beam, possibly via one or more dummy holograms, into a monitor fibre.

Referring now to Figure 5, an optical system 35 has a corrective SLM 30 with operating circuitry 31, and processing circuitry 32. The system includes further devices, here second and third SLMs 33 and 34, disposed downstream of the corrective SLM 30. The second SLM 33 is intended to route light to particular pixel groups 15, 16 of the third SLM 34. The third SLM 34 has monitor sensors 37 for sensing light at predetermined locations. In one embodiment these sensors are formed by making the reflective layer partially transmissive, and creating a sensing structure underneath. In another, the pixel electrode of selected pixels is replaced by a silicon photodetector or germanium sensor structure.

Provided the routing -together with any compensation effects from the corrective SLM 30 - is true, the sensors 37 will receive only a minimal amount of light. However where

misalignment or focus errors are present, the extent of such errors is detected by measuring the power coupled into the monitor sensors. To that end, the sensors 37 are coupled to the processing circuitry 32. The processing circuitry contains a control algorithm to enable it to control the operating circuitry to make iterative adaptive changes to the compensating holograms displayed on the corrective SLM 30 until the system alignment is measured to be optimised.

In another embodiment a determined number of dummy ports are provided. For example for a connector two or more such ports are provided and for routing devices 3 or more dummy ports are provided. These are used for continuous misalignment monitoring and compensation, and also for system training at the start.

Referring now to Figure 6, a dual-function SLM 40 provides both routing and correction. The SLM 40 has operating circuitry 41 and processing circuitry 42. The operating circuitry 41 receives routing data at a first control input 44 for setting up the holograms on the SLM 40 to achieve the desired routing. The processing circuitry 42 also receives routing data on an input 45, and controls the operating circuitry using an algorithm enabling adaptation due to changes in the path taken through the system to take place on a timescale equivalent to that required to change the hologram routing, i.e. of the order of milliseconds.

The control algorithms for this embodiment may use one or more of several types of compensation.

In one embodiment a look-up table is stored in a memory 43, the look-up table storing pre-calculated and stored

TS0000843

values of the compensation for each different route through the system.

In another embodiment the system is trained before first being operated, using iterative changes to the compensating holograms to learn how changing the compensating holograms affects the system performance, the resulting data being held in the memory 43.

In a further embodiment, the processing circuitry 42 employs intelligence responsive to signals from monitor sensors 47,48 for monitoring and calculation of how these compensating holograms should adapt with time to accommodate changes in the system alignment. This is achieved in some embodiments by integrating circuitry components into the silicon backplane of the SLM, or by discrete components such as germanium detectors where the wavelengths are beyond those attainable by silicon devices. In some embodiments sensors 47 are provided for sensing light at areas of the SLM, and in others the sensors 48 may be remote from the SLM to sense the effects of changes on the holograms at the SLM.

Referring now to Figure 7, an optical system 80 includes an SLM 81 for routing beams 1,2 of light from input fibres 3,4 to output fibres 5,6 by means of holograms displayed on pixel groups 13,14 of the SLM. The holograms are provided by operating circuitry 82 which responds to a control input 83 to apply voltages to an array of pixellated elements of the SLM, each of which is applied substantially uniformly across the pixel of concern. This result is a discrete approximation of a linear phase modulation to route the beams.

The operating circuitry 82 calculates the ideal linear phase ramp to route the beams, on the basis of the routing

TS0000844

control input 83 and resolves this phase modulo 2π. The operating circuitry at each of the pixels then selects the closest available phase level to the ideal value. For example if it is desired to route into the m'th diffraction order with a grating period Ω the ideal phase at position u on the SLM 81 is $2\pi mu/\Omega$. Therefore, approximately, the phase goes linearly from zero up to 2π over a distance Ω/m after which it falls back to zero, see Figure 8a.

Deliberate changes to the value of 'Ω' can be used to reduce the coupling efficiency into the output in order to provide a desired attenuation. This is suitable for applying a low attenuation but not for a high attenuation as the beam may then be deflected towards another output fibre, increasing the crosstalk. However if there is only one output fibre this method may be used.

To provide a selected desired attenuation of the optical channel in the system, processing circuitry 85 responds to an attenuation control input 84 to modify the operation of the operating circuitry 83 whereby the operating circuitry selects a linear phase modulation such that by the end of each periodic phase ramp the phase has reached less than 2π, see Figure 8b.

This may be achieved by calculating the ideal value of phase for every pixel, and then multiplying this ideal value by a coefficient r between 0 and 1, determined on the basis of the desired attenuation. The coefficient is applied to every pixel of the array in order to get a reduced level per pixel, and then the available phase level nearest to the reduced level is selected.

TS0000845

The method of this embodiment reduces the power in this diffraction order by making the linear phase modulation incomplete, such that by the end of each periodic phase ramp the phase has only reached $2\pi r$. It has however been found that the method of this embodiment may not provide sufficient resolution of attenuation. It also increases the strength of the unwanted diffraction orders likely to cause crosstalk. When combined with deliberate changes in the length of the ideal phase ramp the resolution of attenuation may be improved. Again if there is only a single output fibre the crosstalk is less important.

Resolution may also be improved by having a more complex incomplete linear phase modulation. However, the unwanted diffraction orders may still remain too strong for use in a wavelength-routed network. Hence to control the power by adapting the routing hologram may have undesirable performance implications in many applications, as crosstalk worsens with increase of attenuation. The problem can be overcome by use of a complex iterative design. This could be used to suppress the higher orders but makes the routing control more expensive.

Referring now to Figure 9, a system 99 includes an SLM 90 controlled by applying a discrete approximation of a linear phase modulation to route beams 1,2 from input fibres 3,4 to output fibres 5,6 as previously described with respect to Figure 8. Thus operating circuitry 91 selects a routing hologram for display by the SLM, in accordance with a routing input 92, whereby the beams may be correctly routed, using a look up table or as otherwise known. A memory holds sets of data each allowing the creation of a respective power controlling hologram. Processing circuitry 93 runs an algorithm which chooses a desired power controlling hologram

corresponding to a value set at a power control input 94. The power controlling hologram is selected to separate each beam into respective main 1a, 2a and subsidiary 1b, 2b beams, such that the main beams 1a, 2a are routed through the system and the or each subsidiary beam(s) 1b, 2b is/ are diffracted out of the system, for example to a non-reflective absorber 95.

The processing circuitry 93 applies the power controlling hologram data to a second input 95 of the operating circuitry 91 which acts on the routing hologram data so as to combine the routing and power controlling holograms together to provide a resultant hologram. The operating circuitry then selects voltages to apply to the SLM 90 so that the SLM displays the resultant hologram.

Thus power in a routing context is controlled by combining the routing hologram by another hologram that has the effect of separating the beam into a main beam and a set of one or more subsidiary beams, of which the main beam is allowed to propagate through the system as required while the other(s) are diffracted out of the system.

For example consider a hologram that applies phases of $+\phi$ and $-\phi$ on adjacent pixels. In terms of real and imaginary parts this hologram has the same real part, cos ϕ, on every pixel, see Figure 10 while the imaginary part oscillates between $\pm \sin \phi$. It can be shown using Fourier theory that the net effect is to multiply the amplitude of the original routed beam by a factor cos ϕ, and to divert the unwanted power into a set of weak beams at angles that are integer multiples of $\pm\lambda/2p$ with respect to the original routed beam, where λ is the operating wavelength and p is the pixel pitch.

TS0000847

The system is designed such that light propagating at such angles falls outside the region of the output fibres 5,6 of Figure 9. An alternative design directs the unwanted light into output fibres 5,6 at such a large angle of incidence that the coupling into the fundamental mode is very weak, and has no substantial effect. In this case the unwanted power is coupling into the higher-order modes of the fibre and so will be attenuated rapidly. A fibre spool or some other technique providing mode stripping is then used on the output fibre before the first splice to any other fibre.

In either case, the effective attenuation of the beam is $10 \log_{10} \cos^2\phi$. Hence, in this way, polarisation-independent phase modulation may be used to create an effect equivalent to polarisation-independent amplitude modulation. In this particular case the pseudo-amplitude modulation applied at every pixel is $\cos \phi$.

It will be clear to those skilled in the art that use of alternate pixels as the period of alternation is not essential, and may in some cases be undesirable. This is because of edge effects in the pixels.

The period and pattern of alternation can be varied so as to adjust the deflection angle of the 'unwanted power'. This light directed away from the output fibres can be collected and used as a monitor signal. Hence the pseudo-amplitude modulation can be used to sample the beam incident on an SLM. This sampling hologram can be combined with a routing and/or power control and/or corrective SLM. In the latter case the sampled beam can be directed towards a wavefront sensor and then used to assess the quality of the beam correction. While the pseudo-amplitude modulation as

TS0000848

described above is applied to the whole beam, it could be applied selectively to one or more parts of the beam.

A further modification to this pseudo-amplitude modulation is to multiply it by a further phase modulating hologram such as to achieve a net effect equivalent to a complex modulation. Such a method could be used, for example, to control the strength of unwanted diffraction orders likely to cause crosstalk or back reflection.

It is often important that the sampling hologram takes a true sample of the output beam. Therefore in some cases the sampling hologram should be applied after the combination of all other desired effects including resolution modulo 2 pi and approximation to the nearest available phase level. In this case the overall actual phase modulation distribution is achieved by a method equivalent to forming the product of the sampling hologram and the overall hologram calculated before sampling.

Similar pseudo-amplitude modulation techniques may be extended to suppress the crosstalk created by clipping of the beam tails at the edges and to tailor the coupling efficiency vs. transverse offset characteristic of the output fibres. Since the transverse position at the output fibre is wavelength dependent, this tailoring of the coupling efficiency vs. offset can be used to tailor the wavelength response of the system. This is important in the context of wavelength division multiplexing (WDM) systems where the system wavelength can be expected to lie anywhere in the range of the available optical amplifiers. The output angle for beam steering using an SLM and periodic linear phase modulation is proportional to the wavelength while the focal length of corrective lenses is also wavelength-dependent.

TS0000849

Therefore a hologram configured to give the optimum coupling efficiency at one wavelength will produce an output beam with transverse and/or longitudinal offset at another wavelength. These effects result in wavelength-dependent losses in systems required to route many wavelength channels as an ensemble. Hence a method designed to flatten or compensate for such wavelength-dependent losses is useful and important.

Among the envisaged applications are the flattening of the overall wavelength response and the compensation for gain ripple in optical amplifiers, especially Erbium-doped fibre optic amplifiers (EDFA).

An SLM device may also be used to adapt the shape, e.g. the mode field shape, of a beam in order to suppress crosstalk.

Beam shaping is a type of apodisation. It is advantageously used to reduce crosstalk created at a device by clipping of the energy tails of the light beams. Such clipping leads to ripples in the far field. Clipping occurs because the energy of the beam spreads over an infinite extent (although the amplitude of the beam tails tends to zero), while any device upon which the beam is incident has a finite width. Clipping manifests itself as a discontinuity in the beam amplitude at the edges of the device

Referring to Figure 11, two SLMs 100,101 are used for beam steering or routing of beams 1,2 from input fibres 3,4 to output fibres 5,6, as described in PCT GB00/03796. Each SLM 100,101 is divided into a number of blocks of pixels 103a, 104a; 103b, 104b. Each block 103a, 104a is associated with a particular input fibre 3,4 -i.e. the fibre of concern points to the subject block. Each block displays a hologram

that applies routing. As previously discussed herein the holograms may also or alternatively provide focus compensation, aberration correction and/or power control and/or sampling, as required.

The blocks 103a, 104a at the input SLM 100 each receive a beam from an associated input fibre 3,4 while the blocks 103b, 104b at the output SLM 101 each direct a beam towards an associated output fibre 5,6. Each block 103a, 103b has a finite width and height. As known to those skilled in the art and as previously noted, the beam width is infinite, therefore the block clips the beam from or to the associated fibre and this creates undesired ripples in the far field.

The ripples due to clipping of the beam 1 are figuratively shown as including a beam 106 which, it will be seen, is incident on the wrong output hologram, displayed on block 104b at the output SLM 101. "Wrong" signifies holograms other than that to which the beam of concern is being routed, for example holograms displayed by blocks around the block to which the beam should be routed. Some of these ripples will then be coupled into "wrong" output fibres 5,6 -i.e. those to which the beam is not deliberately being routed- leading to crosstalk. It will be clear to those skilled in the art that these effects will be present on blocks other than those adjacent to the "correct" blocks, as the field of beam 1 is infinite in extent.

In any physical system the effect of the ripples created by clipping at the output SLM 101 depends on the optical architecture. Where a 2-element confocal demagnification stage is used between the SLM and fibres, the beam at the output fibre 5,6 is a demagnified image of the beam coming from the output hologram. The SLM may be at the focal plane

TS0000851

of the associated lens, but more usually the SLMs are not exactly at the focal plane of the second lens in each 'telescope'. In that situation, the beam will only approximate to an image of the beam 'at' the output hologram.

In practice the non-ideal transfer function of the optics means that a sharp change in the amplitude spreads out and causes crosstalk in adjacent output fibres. In effect the optics applies a limit to the range of spatial frequencies that can be transmitted. This frequency limit causes crosstalk.

Now consider a different optical architecture, in which instead of the two-element stage, there is a single lens between the SLM and output fibres where the SLM is at one focal plane of the lens and the output fibre(s) are at the other focal plane. From the Abbe theory of imaging the output field reaching the output fibre is the Fourier Transform of the field leaving the SLM. In fact the output field is the far field of the field leaving the SLM. The ripples due to clipping increase the crosstalk in fibres adjacent to that towards which the beam is being routed.

The wider the device, compared to the beam spot size at the device, the weaker the ripples in the far field and the lower the crosstalk. In general a parameter 'C' is defined such that the required width of SLM per beam is given by $H=C.\omega$, where ω is the beam spot size at the SLM. The value of C depends on the beam shape and the allowable crosstalk. Typically for a Gaussian beam, with no beam shaping and aiming for crosstalk levels around -40 dB, C would be selected to have a value greater than or equal to 3. Looking at this system from the spatial frequency viewpoint, the field incident on the SLM contains (for perfect optics) all

TS0000852

the spatial frequencies in the input beam. The finite device width cuts off the higher spatial frequencies, so, again, the optics applies a limit to the range of spatial frequencies that can be transmitted and this frequency limit causes crosstalk.

Beam shaping can be used to decrease the crosstalk for a given value of C, and also allow the use of a lower value of C. Calculations for NxN switches have shown that decreasing the value of C leads to more compact optical switches and increases the wavelength range per port. Hence beam shaping can be employed to provide more compact optical switches and/or an increased wavelength range per port.

The idea behind using beam shaping or 'apodisation' to reduce crosstalk is based on an analogy with digital transmission systems. In these systems a sequence of pulses is transmitted through a channel possessing a limited bandwidth. The frequency response of the channel distorts the edges of pulses being transmitted so that the edges may interfere with one another at the digital receiver leading to crosstalk. The channel frequency response can, however, be shaped so as to minimise such crosstalk effects. Filters with responses that have odd-symmetry can be used to make the edges go through a zero at the time instants when pulses are detected.

Therefore beam-shaping with odd symmetry can be used to make the crosstalk go through a zero at the positions of the output fibres. Such a method is likely to be very sensitive to position tolerances.

Another method used in digital systems is to shape the frequency cut-off so that it goes smoothly to zero. In the

TS0000853

present context the ideal case of 'smoothly' is that the channel frequency response and all derivatives of the frequency response become zero. In practice it is not possible to make all derivatives go to zero but a system may be designed in which the amplitude and all derivatives up to and including the k'th derivative become zero at the ends of the frequency range. The higher the value of k, the quicker the tails of the pulse decay. Therefore the beam shaping should go as smoothly as possible to zero.

To investigate the effects of beam shaping the amplitude modulation was treated as continuous. The system studied was a single lens 2f system where 2f is the length of the system between fibres and SLM, assuming f is the focal length with fibres in one focal plane, and an SLM in the other focal plane. The input fibre beam was treated as a Gaussian. Various amplitude modulation shapes were applied at the SLM and the coupling efficiency into the output fibre was calculated. In this architecture and from Abbe theory, the incident field at the SLM is proportional to the Fourier Transform of the field leaving the input fibre. In particular, different spatial frequencies in the fibre mode land on different parts of the SLM. Clipping removes the spatial frequencies outside the area of the hologram. Beam shaping at the SLM has the effect of modifying the relative amplitude of the remaining spatial frequencies.

Residual ripples may still remain due to the discontinuity in the beam derivative but the ripples will be reduced in amplitude and decay more quickly. Further reduction in the ripple amplitude and increase in the rate of decay may be achieved by shaping the beam such that both the amplitude and the first k derivatives go to zero at the edges.

TS0000854

A particularly advantageous shape is one in which the shaped beam has odd symmetry about points midway between the centre and the edges such that the beam amplitude and all of its derivatives go to zero at the beam edges.

Another pseudo-amplitude modulation can be created to implement the beam shaping. This may be achieved by recognising that a phase modulation exp. j $\phi(u)$, where j is the complex operator, is equivalent to a phase modulation cos $\phi(u)$ + j sin $\phi(u)$. Now choose $\phi(u)$ such that the modulus of $\phi(u)$ is varying slowly but the sign is oscillating.

Hence the real part of the modulation, cos $\phi(u)$, will be slowly varying and can act as the amplitude modulator to create the beam shape, while the imaginary part of the modulation, $\pm$ sin $\phi(u)$ will be oscillating rapidly with an equivalent period of 2 or more pixels. Hence the energy stripped off by the effective amplitude modulator will be diffracted into a set of beams that are beam-steered out of the system at large angles.

In a preferred embodiment, the system is designed such that light travelling at such angles will either not reach the output plane or will land outside the region defined by the output ports. Therefore the beam component shaped by sin $\phi(u)$ is rejected by the optical system, while the beam component shaped by cos $\phi(u)$ is accepted by the system and couples into one or more output ports, as required. While this explanation is for a one-dimensional phase modulator array the same principle is applicable in 2-D. If $\phi(u)$ varies from 0 at the centre of the beam to $\pi/2$ at the edges then the amplitude of the beam shaped by cos $\phi(u)$ varies from 1 at the

TS0000855

centre of the beam to 0 at the edges, thus removing the amplitude discontinuity that creates rippling tails in the far field. This can be achieved with minimal change to the insertion loss of the beam as it passes through the system. Indeed, often the insertion loss due to clipping is due to interference from the amplitude discontinuity, rather than the loss of energy from the beam tails.

The beam-shaping hologram is non-periodic but oscillatory and may be applied as a combination with other routing and/or lens synthesis and/or aberration correcting and/or power control and/or sampling holograms.

Further advantages of the beam shaping are that it reduces the required value of C for a given required crosstalk, allowing more compact optical switches. Another advantage is that the crosstalk decays much more rapidly with distance away from the target output fibre. Hence, essentially, the output fibres receive crosstalk only from their nearest neighbour fibres.

Therefore in a large optical switch used as a shared NxN switch for a range of wavelengths, it should be possible to arrange the wavelength channel allocation such that no output fibre collects crosstalk from a channel at the same system wavelength as the channel it is supposed to be collecting. This would reduce significantly the homodyne beat noise accumulation in networks using such switches, and, conversely, allow an increase in the allowed crosstalk in each switch as heterodyne crosstalk has much less of an impact at the receiver, and can also be filtered out if necessary.

The crosstalk suppression method uses beam shaping to suppress ripples in the beam tails. The same method can be adapted to change the beam shape around the beam centre. For the case when the output beam is an image of the beam at the SLM the beam shaping is working directly on an image of the output beam. The fraction of the initial beam that is shaped by the slowly varying function $\cos \phi(u)$ can have the correct symmetry to couple efficiently into the fundamental mode of the output fibre. The fraction of the initial beam that is shaped by the rapidly varying function $\pm \sin \phi(u)$ has the wrong symmetry to couple into the fundamental mode and can be adjusted to be at least partially orthogonal to the fundamental mode.

Effectively, it is the fraction of the beam shaped by $\cos \phi(u)$ that dominates the coupling efficiency into the fundamental mode. Therefore the dependence of the coupling efficiency vs. transverse offset is dominated by the overlap integral between the $\cos \phi(u)$ shaped beam and the fibre fundamental mode.

When the incident beam is the same shape as the fundamental mode and for small transverse offsets the coupling efficiency decreases approximately parabolically with transverse offset. In many beam-steering systems using phase-modulating SLMs the transverse offset at the output fibre increases linearly with the wavelength difference from the design wavelength. Consequently the system coupling efficiency decreases approximately parabolically with wavelength difference from the design wavelength. Beam shaping can be used to adjust the shape of the incident beam and optimised to flatten the dependence on transverse offset and hence to flatten the wavelength response. Alternatively a

TS0000857

more complex wavelength dependence could be synthesised to compensate for other wavelength-dependent effects.

The beam shaping method may be extended to control and adapt the amplitude of the beam steered through the system. If $\phi(u)$ varies from ψ at the centre of the beam to $\pi/2$ at the edges then the real part of the pseudo-amplitude modulation can be considered as cos ψ multiplied by an ideal beam-shaping function that causes insignificant insertion loss. In which case there is an associated additional insertion loss given by approximately $10\log_{10}(\cos^2\psi)$. By varying the value of ψ we may vary the beam power. Therefore we may use the same device to achieve power control, otherwise known as channel equalisation, as well as changing the routing or direction of a beam. Deliberate changes in the beam shaping function can be used to increase the number of 'grey levels' possible for the beam attenuation, i.e. to provide an increased resolution. As for the beam shaping, the rejected power is diffracted out of the system. Therefore this attenuation method does not increase crosstalk.

Another technique for controlling beam power without increasing crosstalk is to deflect the unwanted energy in a direction orthogonal to the fibres susceptible to crosstalk. This may be combined with yet another technique, namely distorting the beam phase in such a way that much of the energy couples in to the higher-order modes of the fibre, rather than the fundamental mode that carries the signal. The beam phase distortion may alternatively be used alone.

In a preferred embodiment, these methods are achieved by dividing the area of the SLM on which the beam is incident into a set of 'power controlling' stripes. The long side of the stripes are at least substantially in the plane in which

TS0000858

the input and output beam are travelling. By varying the relative phase in the stripes the coupling efficiency into the fundamental mode of the output fibre is changed, and hence the throughput efficiency of the optical system is set. This method can be applied to a pixellated device that is also routing or otherwise adapting a beam. In this case each 'stripe' would contain between one and many of the pixels already in use.

Alternatively the long side of the power controlling stripes could be in one plane in one electrode, with the long side of the routing pixels in an orthogonal direction in the other electrode, of which either the stripe electrodes, or the pixellated electrodes, or both, are transparent.

Alternatively the device acts solely as a beam power controller, or channel equaliser. In this case each stripe could be a single pixel. The set of stripes for each beam defines a block. Many blocks could be placed side by side to form a row of blocks, with each block in the row providing channel equalisation for a different beam. Many rows could also be provided so as to provide channel equalisation for signals coming in on different input fibres.

If a pair of confocal focusing elements is disposed between the output fibre and SLM then the output fibre receives an image of the field at the SLM. In this case the attenuation at the output fibre is governed by the orthogonality between the image and the fundamental mode of the fibre. Assuming, and without loss of generality, that a perfect image is formed such that sharp phase discontinuities are preserved, it may be shown that the coupling efficiency into the fundamental mode is proportional to the square of a sum of weighted integrals. The weight is the modulation exp

TS0000859

$j\phi$ applied by a stripe, and the associated integral is over the area onto which that stripe is imaged. The integrand is positive and depends on the square of the local electric field associated with the fundamental mode. Each integral is represented as a phasor, with a length depending on how much of the fundamental mode power passes through the region onto which the stripe is imaged, and a phasor angle depending on the phase modulation. The net coupling efficiency is given by the magnitude of the vector summation of the individual phasors associated with each stripe. For simple devices it may be advantageous to use as few stripes as possible as this reduces any losses due to dead space between the stripes and reduces the control complexity. With only two stripes of approximately equal area (and hence two phasors of approximately equal length) the possible vector sums lie on a semicircle and hence the number of possible grey levels is equal to the number of phase levels between 0 and pi, which may not be sufficient. Transverse offset of the output fibre with respect to the centre of the image has the effect of making the two phasors unequal and hence complete extinction is not possible. These problems may be overcome by using ~~three or more stripes per hologram. For example with three~~ stripes the loci of vector sums lie on circles centred about the semicircle taking just two of the stripes into consideration. Hence many more values are possible. Increasing the number of stripes increases the number of grey levels and the depth of attenuation.

A fibre spool is used on the output fibre before any splices are encountered. It will clear to those skilled in the art that other mode stripping devices or techniques could be used instead.

TS0000860

This system can also be adaptive: given knowledge of the applied phase by each stripe and enough measurements of the coupling efficiency, the lengths of the different phasors associated with each stripe can be calculated. Given these lengths the performance can be predicted for any other applied phases. Hence suitable algorithms can be included in the SLM or interface to train and adapt the device performance to cater for transverse offset of the output fibre and other misalignments.

Sharp edges or phase discontinuities in this image will be eroded by the optical modulation transfer function (MTF) but, nevertheless, where a sufficient number of stripes is provided it is possible to vary the phase modulation of each and achieve a wide range of attenuation.

Ultimately what limits the depth of attenuation is the residual zero-order due to, for example, an imperfect quarter-wave plate or Fresnel reflections from different surfaces inside the SLM such that the reflected light has not yet been phase-modulated. An example reflection is from the interface between the cover glass and transparent electrode. Such residual zero orders will couple into the output fibre independently of the phase modulation. In many cases the residual zero order will have a different polarisation state to the beam that has been properly processed by the phase modulation, so even adapting the phase modulation will not recover the depth of attenuation.

In such cases it is advantageous to apply some routing to the output fibre, such that the zero order is offset from the output fibre and the intended output beam is steered into a diffraction order of the routing hologram. For a many-pixellated SLM this may be achieved using the standard

TS0000861

routing algorithm described earlier. For a simple SLM with few pixels, e.g. the one with the stripes in the plane of the input and output fibres, these stripes can be subdivided in an orthogonal direction, that is to create a 2-D array of pixels. This however increases the device complexity.

An alternative simple device is to combine it with a tip-tilt beam-steering element, as described in Optics Letters, Vol. 19, No 15, Aug 1, 1994 "Liquid Crystal Prisms For Tip-Tilt Adaptive Optics" G D Love et al. In this case the top 'common electrode' is divided into a set of top electrodes, one for each device, where each device is assumed to receive a separate beam or set of beams. Each top electrode has different voltages applied on two opposite sides. The shape of the top electrode is such that the voltage between the electrodes varies nonlinearly in such a way as to compensate for the non-linearity of the phase vs. applied volts characteristic of the liquid crystal. Hence with all the stripe electrodes at the same voltage the device provides a linear phase ramp acting like a prism and deflecting the phase-modulated beam in a pre-defined direction, such that the residual zero order falls elsewhere, as required. Changing the stripe electrode voltage causes phase changes in the imaged beam but does not prevent the deflection. Small adjustments in the phase ramp can be used to compensate for component misalignments and/or curvature of the SLM substrate and/or wavelength difference from the design wavelength for the tip-tilt device. Such small adjustments in the phase ramp can also be used to achieve fine control over the attenuation. Hence such a device would be useful whether or not the required attenuation is sufficiently strong for the residual zero order to become a problem. Alternatively the top electrode can be divided into two or more areas, with the shape of each so as to compensate

for the phase vs. volts non-linearity. Varying the voltage on the ends of each electrode can be used to offset the phase modulation of each stripe in order to create the desired attenuation. In this case the aluminium electrode would be common to the device, removing dead-space effects.

In another embodiment of the tip-tilt device, the top electrode is common to all devices and a shaped transparent electrode is provided, e.g. by deposition, on top of the quarter-wave plate, with connections to the SLM circuitry to either side of the device. In this case the aluminium may act only as a mirror and not as an electrode. Again the shaped transparent electrode may be subdivided into two or more areas to provide the attenuation. This embodiment avoids dead-space effects and also a voltage drop across the quarter-wave plate.

In a further embodiment, such a tip-tilt device has a shaped transparent electrode on both cover glass and quarter-wave plate. The planes of tip-tilt for the two devices may be orthogonal or parallel. With two parallel tip-tilt electrodes the device may act as a power-controlling two-way switch, and also, as will be described later, can be used in a multi-channel add-drop multiplexer. With two orthogonal tip-tilt electrodes the device can beam steer in 2-dimensions such as to correct for positional errors. Either of the two tip-tilt electrodes can be subdivided so as to provide attenuation.

One advantageous SLM is that described in our co-pending patent application EP1053501.

If there is a single focusing element between the output fibre and SLM then the field at the output fibre is the Fourier Transform of the field leaving the SLM. Three

TS0000863

classes of phase modulation can be used to change the coupling efficiency into the output fibre. The first two classes assume a many-pixellated SLM while the third class assumes a few-pixel SLM with or without tip-tilt features as described earlier. In the third class the tip-tilt feature may be used to compensate for transverse positional errors in the input and output fibre.

The different classes of phase modulation result in a variable coupling efficiency at the output fibres using the following methods:

As noted above, the first class uses a many-pixellated SLM. A periodic phase modulation is applied that creates a set of closely spaced diffraction orders at the output fibre. The spacing is comparable to the fibre mode spot size such that there is significant interference between the tails of adjacent diffraction orders. The phases of these diffraction orders are chosen such that the resulting superposition is rapidly alternating in phase and therefore couples into the higher-order fibre modes. Varying the strength, phase and position of each diffraction order changes the attenuation. If the long sides of the stripes used to create this alternating output field are in the plane of the input and output fibres, then diffraction orders landing outside the target optical fibre fall along a line orthogonal to the output fibre array, and therefore do not cause crosstalk.

In the second class, again using a many-pixellated SLM, a non-periodic smoothly varying non-linear phase modulation is applied at the SLM, in this case the SLM acts as a diffractive lens such that the beam is defocused and couples into higher-order modes.

In the third class, which uses a simple SLM with few pixels, the pixels are used to apply phase distortion across the beam incident on the SLM. Such phase modulation can be considered to be equivalent to the first class but with a long period. The phase distortion at the SLM results in amplitude and phase distortion in the reflected beam and hence reduces the coupling efficiency into the output fibre.

Again, all three methods require use of a mode stripper on the output fibre. Again suitable algorithms can be included in the SLM or interface to train the system.

Another embodiment, not illustrated, uses a graded-index (GRIN) lens secured to one face of an SLM, and having input and output fibres directed on or attached to the opposite face. The SLM may provide selective attenuation, and/or may selectively route between respective input fibres and selected output fibres. A requirement for stable performance is fundamental for optical devices used in communications and like fields. One of the dominant manufacturing costs for such optical devices is device packaging. The GRIN lens architecture results in a compact packaged device resilient to vibrations. However, the architecture can have problems with spherical aberration and problems in achieving the required alignment accuracy. In particular there is often a requirement for precise transverse positioning of the fibres. Also due to manufacturing tolerances in the GRIN lens the focused spot in the reflected beam can be offset significantly in the longitudinal direction from the end face of the output fibre, resulting in an insertion loss penalty. This problem gets worse the longer the GRIN lens. Applying selected non-linear phase modulation to the SLM may compensate for problems such as focus errors, length errors, longitudinal positional errors and spherical aberration.

TS0000865

Applying selected linear phase modulation to the SLM and/or using tip-tilt electrodes may compensate for problems such as transverse positional errors.

Optical systems using SLM devices may individually process the channels from an ensemble of channels on different wavelengths, entering the system as a multiplex of signals in a common beam. In a first application, the SLM devices carry out attenuation, known in this context as channel equalisation. A second application is add-drop multiplexing. Further applications are reconfigurable wavelength demultiplexers and finally modular routing nodes. In all of these applications the SLMs may carry out routing and/or power control and/or beam shaping and/or sampling and/or corrective functions as described earlier. The system to be described is not restricted to this set of four applications but is a general multi-wavelength system architecture for distributing the wavelength channels across an array of devices and recombining the processed channels onto one or more selected outputs.

Such multi-wavelength architectures can be adaptations of optical architectures used for wavelength de-multiplexing. Wavelength demultiplexers typically have a single input port and many output ports. These can use one or more blazed diffraction gratings: either in free-space or in integrated form such as an AWG (Arrayed Waveguide Grating). These devices are reciprocal and hence work in reverse. Hence if a signal of the appropriate wavelength is injected into the output port it will emerge from the input port. The output port usually consists of an optical waveguide or fibre with an accepting end that receives a focused beam from the optical system and a delivery end providing an external connection. Now consider replacing the acceptance end of the

TS0000866

output waveguide/fibre with a reflective SLM: all of the processed signals reflected straight back will couple into the input fibre and emerge from the input port. These signals can be separated from the input signal with a circulator. Alternatively the system is adapted so that the reflected signals emerge and are collected together into a different fibre.

Free-space optical systems performing wavelength de-multiplexing can use diffraction gratings made by ruling, or from a master, or made holographically, or by etching. Usually these work in reflection but some can work in transmission. One or two gratings can be used in the system. The optics used to focus the beams can be based on refractive elements such as lenses or reflective elements such as mirrors or a combination of the two.

Referring to Figure 12, a single grating 300 is used with refractive focusing elements and, to make the diagram clearer, the grating is drawn as if it works in transmission. Possible adaptations are to use two gratings and/or reflective focusing elements and/or gratings that work in reflection.

A first input beam 301 from an input port 304 (please note there will be some additional optics between the input port/output port and the diffraction grating) contains an ensemble of channels at different wavelengths entering the system on the same input port. After passing through the grating 300 the beam 301 is split into separate beams 301a, 301b for each wavelength channel, each travelling in a different direction governed by the grating equation. The grating 300 is positioned in the input focal plane of a main lens 310 with a reflective SLM 320 at the output focal plane

TS0000867

of lens 310. If desired, there may also be a field-flattening lens just in front of the SLM.

As is clear to those skilled in the art, the incident beams 301a, 301b emerge mutually parallel from the lens 310, but spatially separate. Thus, the lens refracts each beam to a different transverse position 320a, 320b on the SLM. At each position there is a pixellated hologram device and/or tip-tilt device for processing the relevant wavelength component of the beam. The width of each hologram or tip/tilt device compared to the spot size of the incident beam incident is sufficient to avoid clipping effects. Instead, or additionally, beam shaping may be used. The device may be controlled to deflect or attenuate the beam as described earlier, and provides output processed beams 302a, 302b. The processed beams are reflected back from the SLM 320 towards the main lens 310 and then refracted back by the main lens towards the diffraction grating 300. The grating then diffracts the beams. It may be shown that, assuming the SLM is flat, all beams subjected to the same deflection at the SLM and entering the system in the same common input beam will emerge parallel and coincident from the diffraction grating. SLM curvature can be compensated by small changes in the deflection angle due to the SLM. Therefore all beams subjected to the same eventual deflection from the SLM are collected into the same output port 305. Hence a system may be constructed with a single input port 304 and a single output port 305 that produces independent attenuation or level equalisation for each wavelength channel.

By having a choice of two or more deflection angles at the SLM every input channel may be routed independently to one of two or more output ports. There may also be two or more input ports. It may be shown that for one or more

TS0000868

parallel input beams, the action of the grating and main lens is such that all channels at the same wavelength but from different input ports are incident at the same transverse position at the SLM. Hence these channels at the same wavelength are incident on the same channel processing hologram and/or tip-tilt device. As every wavelength channel is incident on a different device, the device response may be optimised for that particular wavelength. For example if a pixellated SLM is used the deflection angle is proportional to the wavelength. Hence small adjustments in the phase ramp can be used to adjust the deflection angle to suit the wavelength to be routed.

In an alternative embodiment the input beam or input beams contain bands of channels, each incident on their own device. In this and the previous embodiment the beam deflection or channel equalisation may vary discontinuously with wavelength.

In a third embodiment the input beam could contain one or more signals spread almost continuously across the wavelength range. The light at a particular wavelength will be incident over a small transverse region of the SLM, with, typically a Gaussian type spatial distribution of energy against position. The position of the peak in the spatial distribution is wavelength dependent and may be calculated from the grating and lens properties. For such a system the beam deflection or channel equalisation varies continuously with wavelength. The pixellated SLM is divided into blocks, each characterised by a 'central wavelength', defined by the wavelength whose spatial peak lands in the middle of the block. A particular channel equalisation or beam deflection is applied uniformly across this block. Light of a wavelength with a spatial peak landing in between the centres of two

TS0000869

blocks will see a system response averaged across the two blocks. As the spatial peak moves towards the centre of one block the system response will become closer to that of the central wavelength for the block. Hence a continuous wavelength response is obtained. The block size is selected with respect to the spatial width of each beam in order to optimise the system response. This method is particularly attractive for increasing the wavelength range of a 1 to N switch.

The efficiency of a blazed diffraction grating is usually different for light polarised parallel or perpendicular to the grating fringes. In the multi-wavelength systems described above the effect of the quarter-wave plate inside the SLM is such that light initially polarised parallel to the grating fringes before the first reflection from the blazed grating is polarised perpendicular to the grating fringes on the second reflection from the blazed grating. Similarly the light initially polarised perpendicular to the grating fringes before the first reflection from the blazed grating is polarised parallel to the grating fringes on the second reflection from the blazed grating. Hence, in this architecture, the quarter-wave plate substantially removes the polarisation dependence of the double pass from the blazed grating, as well as that of the phase modulation.

Returning to the architecture that produces independent effects for every wavelength channel, a system with two inputs and two outputs can work as an add-drop multiplexer. Add-drop multiplexers are usually used in ring topologies, with the 'main' traffic travelling between the ring nodes, and 'local' traffic being added and dropped at each node. Considering each node, one input (main in) is for the

TS0000870

ensemble of channels that has travelled from the 'previous' routing node. The second input (add) is for the ensemble of channels to be added into the ring network at the add-drop node. One output (main out) is for the ensemble of channels travelling to the 'next' routing node while the second output (drop) is for the ensemble of channels to be dropped out of the ring network at the node. If a particular incoming wavelength channel is not to be 'dropped' at the node, then the channel-dedicated device at the SLM should be configured to route the incoming wavelength from the main input to the main output. However, if a particular incoming wavelength channel is to be dropped, then the channel-dedicated device at the SLM should be configured to route the incoming wavelength from the main input to the drop output. In this case the main output now has available capacity for an added channel at that same wavelength. Therefore the input beam carrying the channels entering the add port should be positioned so that when the device is configured to route from main in to drop, any channel coming in from the add port is routed to the main out. An embodiment is shown in Figure 13.

Referring now to Figure 13, an SLM 141, used in the context of the multi-wavelength architecture shown in Figure 12, has a pixel block 140 and/or tip-tilt device upon which a main input beam 130 is incident, at an angle m1 to the normal 142. Holograms are provided to cause deflections selected from $+\theta_1$ and $-\theta_2$. The main beam has a zero order or specular reflection 130a. Due to the display of a first hologram on the block 140, the main output is deflected by $+\theta_1$ from the specular direction to a main output beam 132. An add input 131 is incident at an angle a1 on the block 140, and produces a zero order reflection 131a. The device also has a drop output beam direction 133.

TS0000871

When the hologram applying the deflection of $+\theta_1$ is displayed, light at the relevant wavelength entering in the add direction 131 is not steered into either of the main output beam direction 132 or the drop output beam direction 133. Effectively it is 'grounded'. This feature may be used to help to stop crosstalk passing between and around rings.

When the hologram applying the alternative deflection of $-\theta_2$ is applied, the add input is routed to the main output beam direction 132 while the main input is routed to the drop output beam direction 133.

Another configuration of the multi-wavelength architecture is to have a single input port and a separate output port for every wavelength channel and SLM devices for each channel capable of providing a set of many deflections. When configured so that a single channel leaves on each output port, the device acts as a reconfigurable demultiplexer.

A system with a single input port and many output ports can act as a module to form part of a modular routing node. With M output ports then each routing device should produce M different deflections, with small adjustments to compensate for wavelength differences and alignment tolerances. All devices producing the same eventual deflection will cause the associated wavelength channel to be routed out of the same output port. Hence such a system can send none, one or many (up to the number of channels entering the input port) channels out from the same output port.

This type of connectivity would be useful in mesh networks where each node is connected by a multi-fibre link

to, typically, between 2 and 5 nearest neighbour nodes. Each link carries traffic to and from the nearest neighbour nodes. Usually individual fibres in the link carry traffic in just one direction but some are bi-directional. For an example where a link has an average of 6 pairs of external fibres and a node has 5 links, then there would be 30 external incoming fibres ~~in~~ and 30 external outgoing fibres ~~out~~. The function of the node is to route any wavelength channel from any incoming fibre to any outgoing fibre. Each fibre may carry many wavelength channels. Currently up to 160 channel systems are being installed although 40 or 80 channel systems are more usual.

An ideal node architecture allows the network operator to start with one or more add-drop nodes connected to one or more rings and then allow the individual add-drop nodes to be connected so that the network topology can evolve towards a mesh. The node architecture should also allow extra fibres to be added to each link as required to meet the demand, with the extra parts or modules of the node being installed as and when required. Fibre management and installation between sub-components inside the routing node is also expensive.

A known architecture for such a routing node uses a separate wavelength demultiplexer for every input fibre. The separated wavelength channels are then carried over optical fibres to NxN optical switches. To avoid internal wavelength blocking then all channels at a particular wavelength must be connected to the same NxN switch. Hence the switch will receive channels at the same wavelength from every single input fibre. The channels leaving the switch are carried over optical fibres to a separate wavelength multiplexer for every output fibre. Hence the switch will route channels at the same wavelength towards every single output fibre.

TS0000873

These switches have a sufficient number of ports for added and dropped channels, and channels passing to and from wavelength conversion and optical regeneration. This sufficient number is estimated based on traffic analysis as it depends on the instantaneous mapping of channels between nodes and the wavelength and fibre allocation. Each switch may service one or more wavelength channels. In one device, the number of fibres is around 3000 resulting in significant fibre management and installation costs. Even grouping together different fibres to or from the same link and grouping together the add fibres and regenerator fibres only reduces the number of separate entities to be managed to 560.

With such a large number of fibres it is not economic to provide optical amplifiers inside the routing node to compensate for insertion losses. Another problem with this architecture is how to add in extra external fibres once the switch capacity has been exhausted with the current number of external fibres. This cannot be done without replacing every single switch. In advance it is difficult to know how large to provision the switch to avoid or delay this problem.

An alternative node architecture uses the multi-wavelength architecture described earlier to provide a separate module for every input fibre and a separate module for every output fibre. Consider first an input module. This should be designed so that none, one, many or all of the input channels may leave any of the output ports. These output ports are used to carry channels towards output modules and towards other parts of the node providing wavelength conversion, regeneration and ports to electronic switches, for example. A connection between an input module and an output module carries every wavelength channel mapped

TS0000874

between the corresponding input and output fibre. A particular input module does not have connections to every output module. It does have connections to output modules going back to the same neighbouring node from which the input channels have travelled, except perhaps for network monitoring and management functions. It might not need to have separate connections to every output module for the output fibres to the other neighbouring nodes. It is however provided with sufficient connectivity to the output channels on every output link to avoid unacceptable levels of wavelength blocking. For example each input module could be connected to a subset of the output modules, with an overflow system used to provide a connection to the other output modules, when required. An output module is designed like an input module but works in the opposite direction.

In this architecture, the dropped channels and channels needing wavelength conversion exit from a common port or a pair of ports. As a result it can be shown that satisfactory performance is achieved using fewer than 1000 fibres and fewer than 50 fibre groups.

Hence the total number of fibres inside the node is reduced by a factor of over 3 while the total number of fibre entities to be installed and managed is reduced by a factor of 10 or more. This represents a significant reduction in cost and complexity.

The node architecture just described is modular in that it can be used to build a range of nodes of different connectivity and dimension. The modules can be used to assemble a node like that described above, starting with only 1 or 2 fibre pairs per link and adding in extra modules to

TS0000875

allow more fibres per link. Extra modules can be added in and connected up as and when required, allowing the network operator to delay investment in infrastructure for as long as possible. When the node has reached, for example, 6 fibre pairs per link and the capacity begins to be exhausted there are two ways to upgrade the node. The first way is to upgrade the numbers of wavelength channels on particular fibres in each link. This requires replacing the associated modules with modules processing more channels. However the other modules (and the fibre interconnections) can remain in service. In contrast for the conventional architecture as well as upgrading the demultiplexers and multiplexers associated with the particular fibres to be upgraded, a whole set of NxN switches must be installed, one for every new system wavelength. These switches will remain under-utilised until all the fibre systems have been upgraded.

The second way to upgrade the node is to replace selected modules with models providing an increased number of fibre choices per output link allowing more fibres per link. This requires the installation of more fibre groups inside the node. In contrast for the conventional architecture every NxN switch must be replaced meaning the associated system wavelengths would be out of service on every fibre entering or leaving the node.

The smallest node can have as few as two modules, which would act as an add-drop node. Several pairs of such modules can service a stacked set of rings, allowing interconnection between different rings. Adjacent rings can also be interconnected. A hybrid ring/mesh network can be created. Hence the same modular system can be used for ring networks, mesh networks and mixes of the two. It can also allow re-use

TS0000876

of existing plant and allow an add-drop node to grow and evolve into a wavelength-routing cross-connect.

It will be clear to those skilled in the art that the use of reflective SLMs may allow optical folding to be accomplished and provide a compact system. Thus folding mirrors which may be found in some systems are replaced by SLMs that serve the dual function of folding and correction for system. As an example, this application of SLMs would be attractive in the context of free-space wavelength demultiplexers as it would help to suppress the problems associated with long path lengths.

It will also be clear to those skilled in the art that although the described embodiments refer to routing in the context of one-to-one, it would also be possible to devise holograms for multicast and broadcast, i.e. one-to-many and one-to-all, if desired.

Although the invention has been described with reference to a number of embodiments, it will be understood that the invention is not limited to the described details. The skilled artisan will be aware that many alternatives may be employed within the general concepts of the invention as defined in the appended claims.

TS0000877

Claims

1. A method of controlling a light beam using a spatial light modulator (SLM) having a plurality of pixels, the method comprising:

determining a desired phase modulation characteristic across an array of said pixels for achieving the desired control of said beam;

controlling said pixels to provide a phase modulation derived from the desired phase modulation, wherein the controlling step comprises

providing a population of available phase modulation levels for each pixel, said population comprising a discrete number of said phase modulation levels;

on the basis of the desired phase modulation, a level selecting step of selecting for each pixel a respective one of said phase modulation levels; and

causing each said pixel to provide the respective one of said phase modulation levels.

2. The method of Claim 1, wherein in each pixel of the ~~SLM each orthogonally polarised component of the light beam~~ is subject to a respective substantially similar electrically set phase change, whereby the SLM is substantially polarisation independent.

3. A method of routing a light beam comprising the method of Claim 1 or Claim 2, wherein the desired phase modulation at least includes a linear component.

4. The method of any preceding claim comprising resolving the desired modulation modulo 2pi.

5. The method of any preceding claim wherein the desired phase modulation at least includes a non-linear component.

6. The method of any preceding claim wherein the method further comprises selecting a said array of pixels from said plurality for incidence by said light beam.

7. The method of any preceding claim wherein the level selecting step comprises determining the desired level of phase modulation at a predetermined point on each pixel and choosing for each pixel the available level which corresponds most closely to the desired level.

8. The method of any of Claims 1-6, wherein the level selecting step comprises determining a subset of the possible levels for each pixel which provides the best fit to the desired characteristic.

9. The method of any of Claims 1-6, wherein the level selecting step comprises determining a subset of the possible levels, which provides the best fit to the desired characteristic, wherein the subset comprises a set of level distributions, each having a particular level for each pixel.

10. The method of any preceding claim wherein the causing step includes providing a respective voltage to an electrode of each pixel, wherein said electrode extends across substantially the whole of the pixel.

11. The method of any preceding claim wherein the step of determining the desired phase modulation comprises calculating a desired direction change of a beam of light.

12. The method of Claim 11 wherein, after the step of calculating a direction change, the step of controlling the pixels comprises iteratively correcting the levels applied to obtain an improved result.

13. The method of any preceding claim wherein the step of determining the desired phase modulation is retroactive, whereby parameters of the phase modulation are varied in response to a sensed error to reduce the error.

14. A method for controlling the focus of a beam of light comprising the method of any preceding claim.

15. The method of any preceding claim wherein the array selecting step selects the array of pixels in dependence on the predicted path of a beam.

16. The method of Claim 15, comprising, after the array is selected using the predicted path, adaptively determining whether the predicted path is correct, and if not selecting a different pixel array.

---

17. The method of any of Claims 11-16, wherein the method includes both causing the SLM to route a beam and causing the SLM to emulate a corrective element to correct for errors, whereby the SLM receives both a discrete approximation of a linear phase modulation applied to it to route the beam and a discrete approximation of a non-linear phase modulation for said correction.

18. The method of any preceding claim, further comprising the step of providing sensors for detecting temperature change, and processing circuitry responsive to the outputs of those sensors, and the step of modifying the

phase modulation levels applied to the pixels to reduce the effect of temperature change.

19. The method of any preceding claim, further comprising the step of providing sensors disposed to detect misalignment and focus errors, the step of measuring the power coupled into the sensors and the step of modifying the phase modulation levels applied to the pixels to reduce the measured power to thereby reduce the errors.

20. The method of any preceding claim comprising changing non-linear modulation values in response to changes in the path taken through the system at a timescale equivalent to that required to change linear modulation values.

21. The method of any preceding claim, comprising modifying the phase modulation levels applied to the pixels whereby the attenuation of an optical channel passing subjected to the SLM is controlled.

22. The method of Claim 21, comprising calculating the desired phase modulation value for every pixel, and then multiplying the desired values by a coefficient having a value selected according to the desired attenuation between 0 and 1, and comparing the resultant to the closest available phase level to provide the phase modulation level applied to the pixel.

23. The method of Claim 21, further comprising selecting by a discrete approximation to a linear phase modulation, a routing hologram for display by the SLM whereby the beams may be correctly routed; selecting by a discrete approximation to a non-linear phase modulation, a further

hologram for separating each beam into main and subsidiary beams, wherein the main beam is routed through the system and the or each subsidiary beam is diffracted out of the system; forming from the routing and further holograms a resultant hologram; and causing the SLM to display the resultant hologram.

24. The method of Claim 21, further comprising selecting by a discrete approximation to a linear phase modulation, a routing hologram for display by the SLM whereby the beams may be correctly routed; selecting by a discrete approximation to a non-linear phase modulation, a further hologram for separating each beam into main and subsidiary beams, wherein the main beam is routed through the system and at least one subsidiary beam is incident on an output at an angle such that its contribution is insignificant; forming from the routing and further holograms a resultant hologram; and

causing the SLM to display the resultant hologram.

25. A method of reducing the effects of width clipping ~~of a light beam comprising modifying the shape of the light~~ beam using the method of any preceding claim in which the desired phase modulation is selected to include a non-linear phase modulation profile.

26. The method of any preceding claim comprising selecting a non-linear modulation profile to provide wavelength dependent effects, and applying said profile to the SLM.

27. The method of any preceding claim wherein said light beam is at a telecommunication wavelength.

OPTICAL PROCESSING

A pixel array on a pixellated multiple phase liquid crystal over silicon spatial light modulator is controlled to provide an approximation to a desired phase profile by selecting from a discrete population of phase levels. The SLM may be polarisation independent.

By selection of a linear phase profile a beam of incident light is deflected in a selected direction. A non-linear profile may also or alternatively be used. Such a non-linear profile may attenuate a beam, change the focus of the beam, sample the beam and/or correct for misalignments, aberrations and tolerances in an optical system.

Add-drop devices are described, as is a system for spatially separating a beam into different frequency components for application to different arrays of such an SLM.

TS0000883

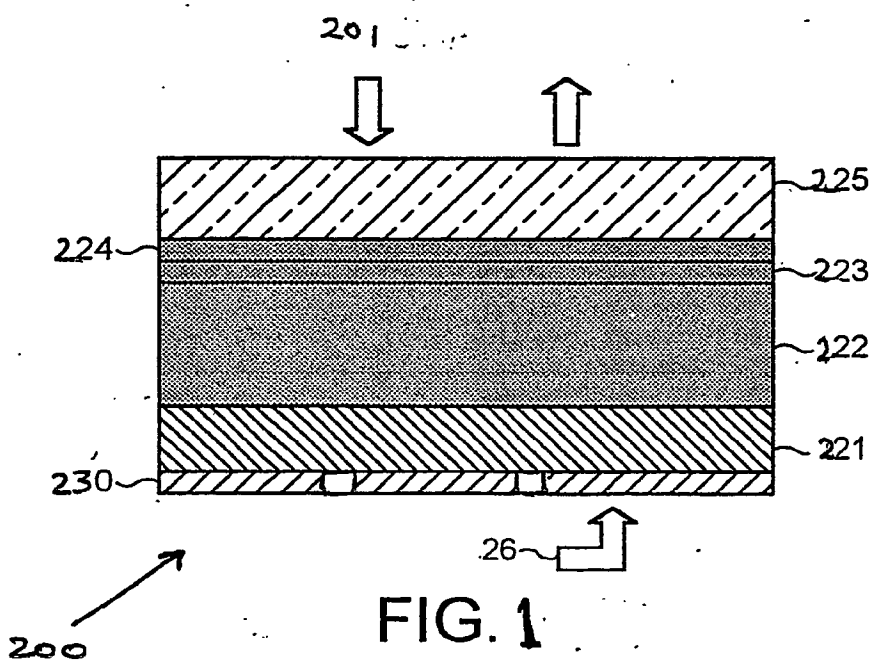

FIG. 1

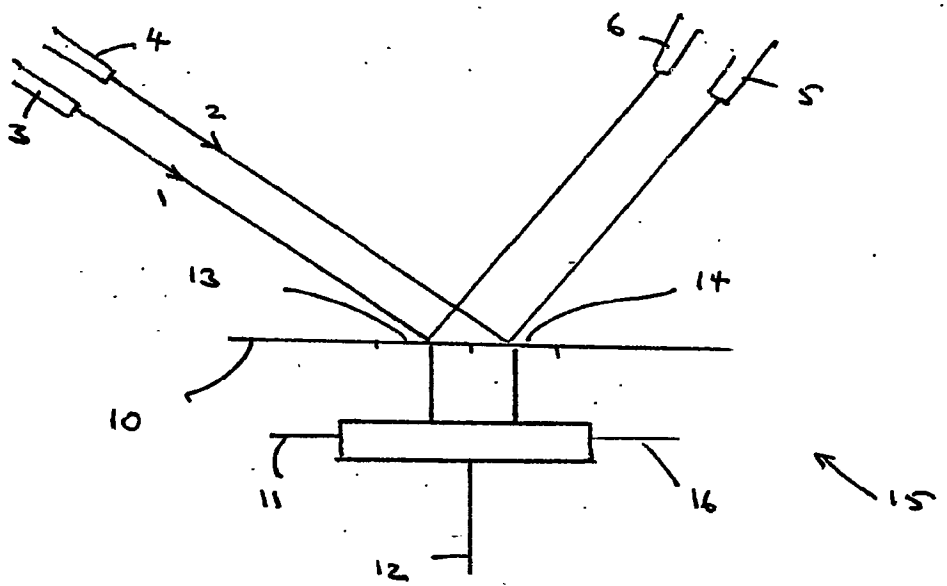

FIG 2

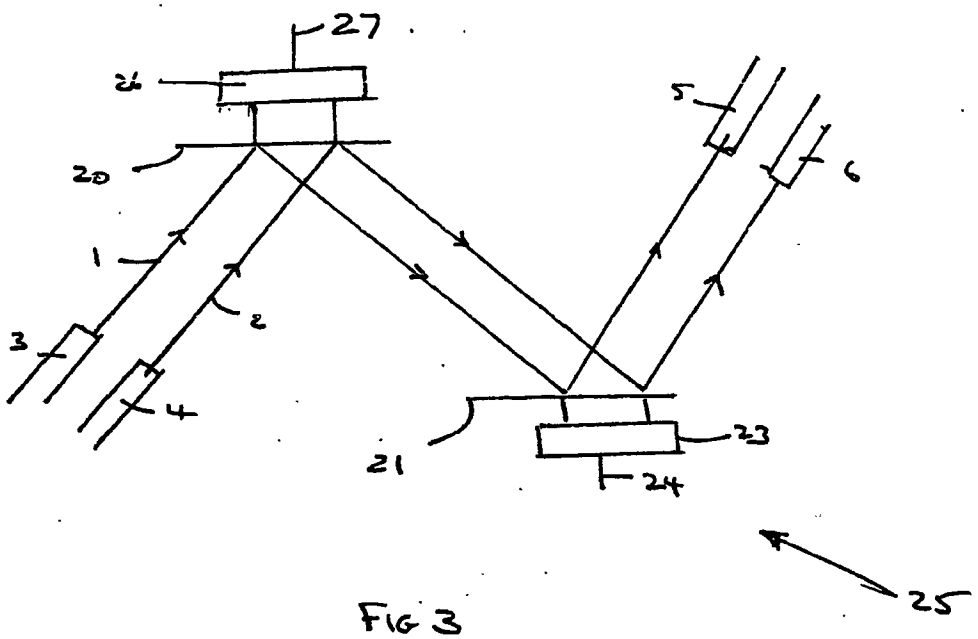

FIG 3

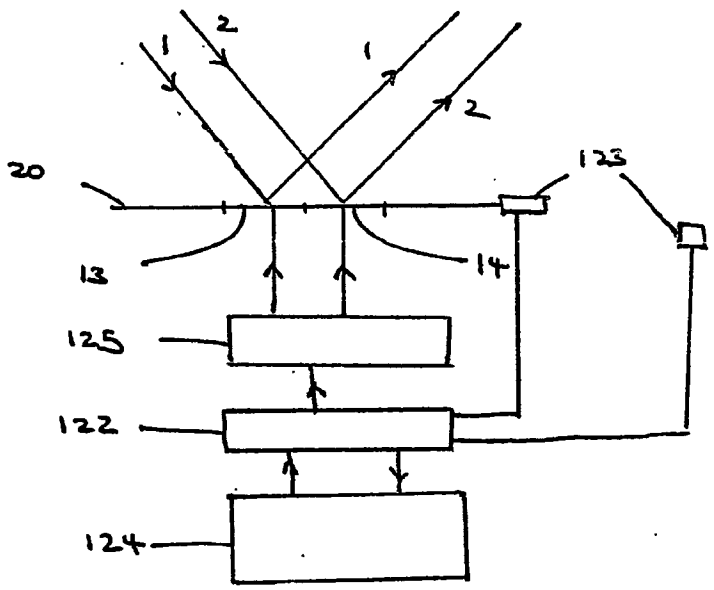

FIG 4

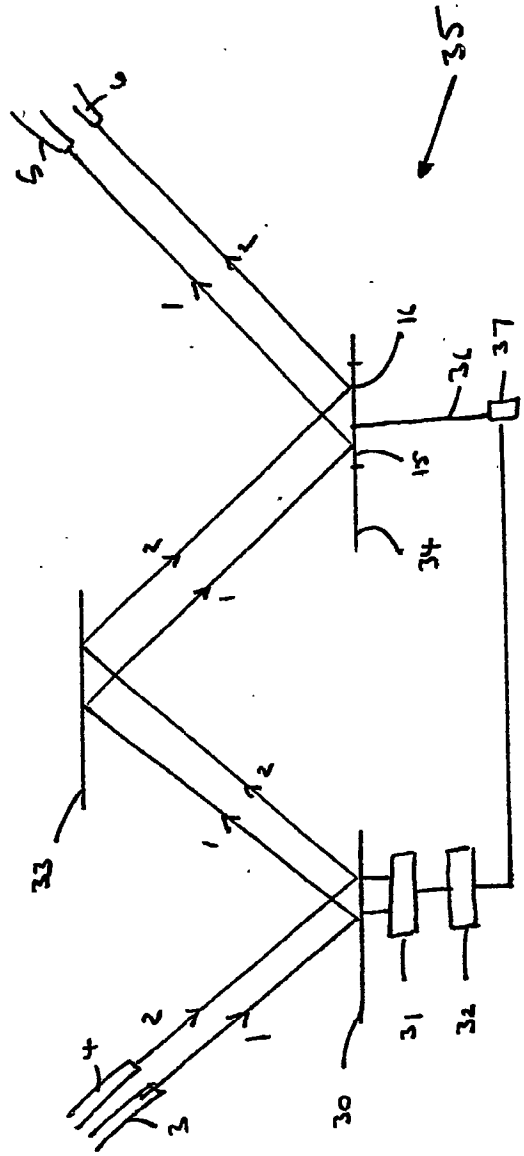

FIG 5

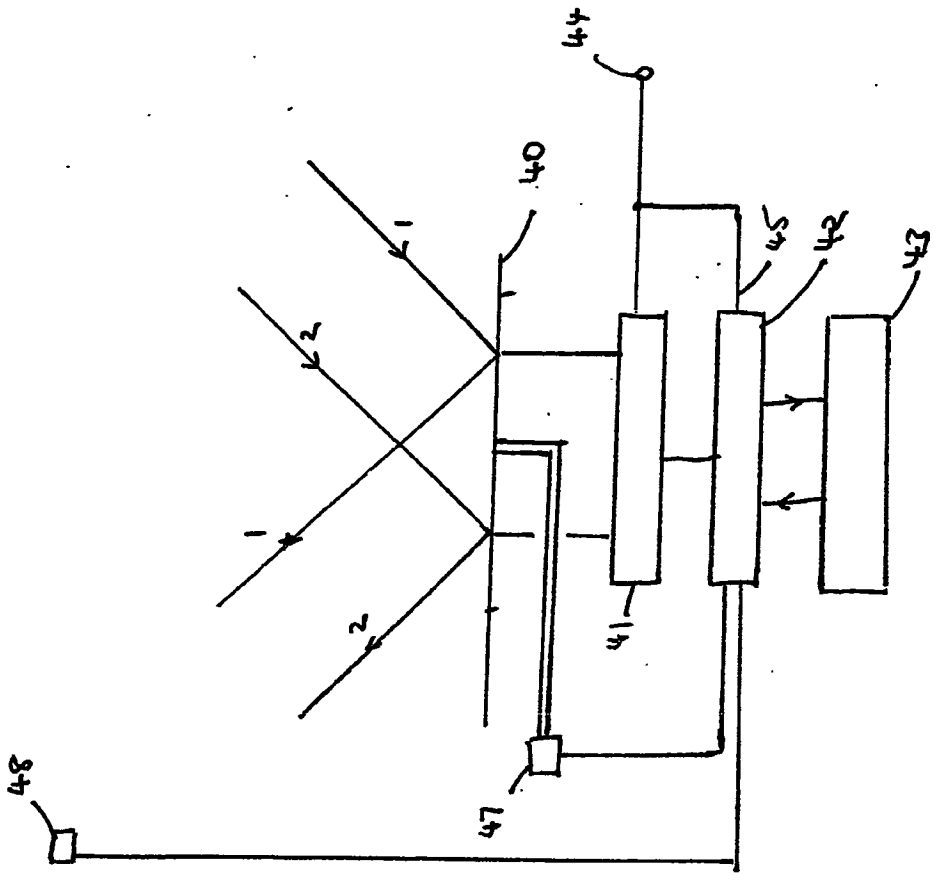

FIG 4

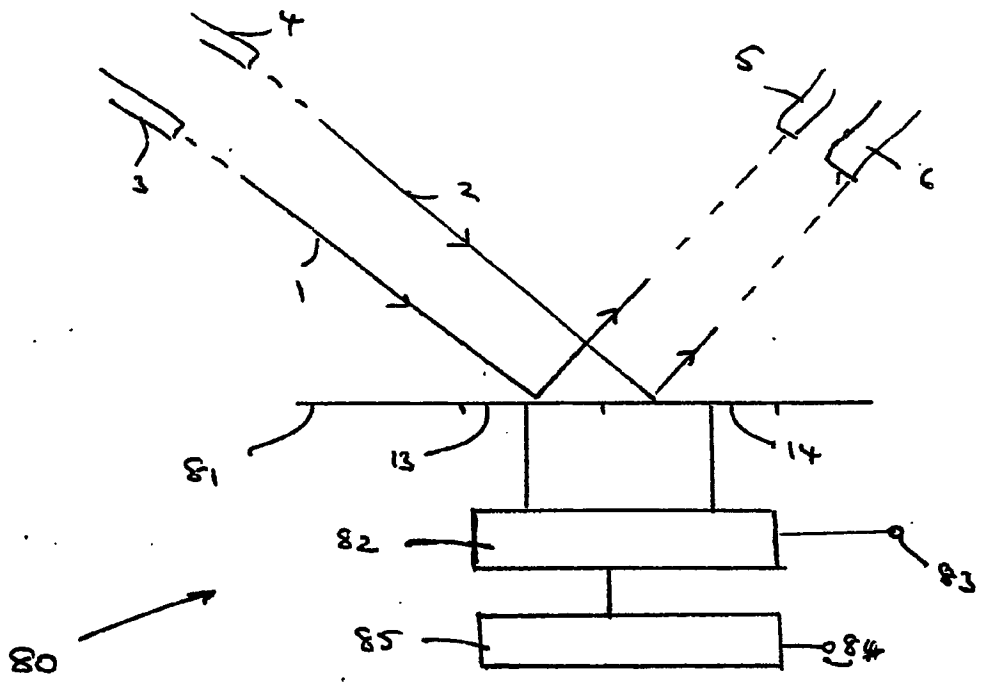

Fig 7

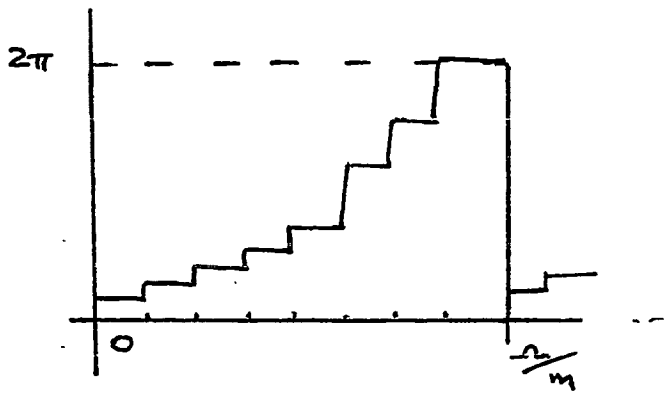

FIG 8a

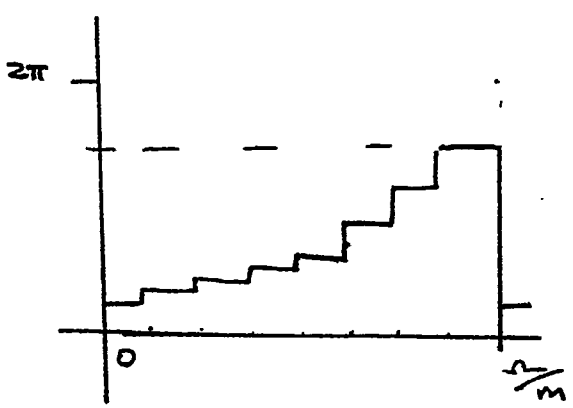

FIG 8b

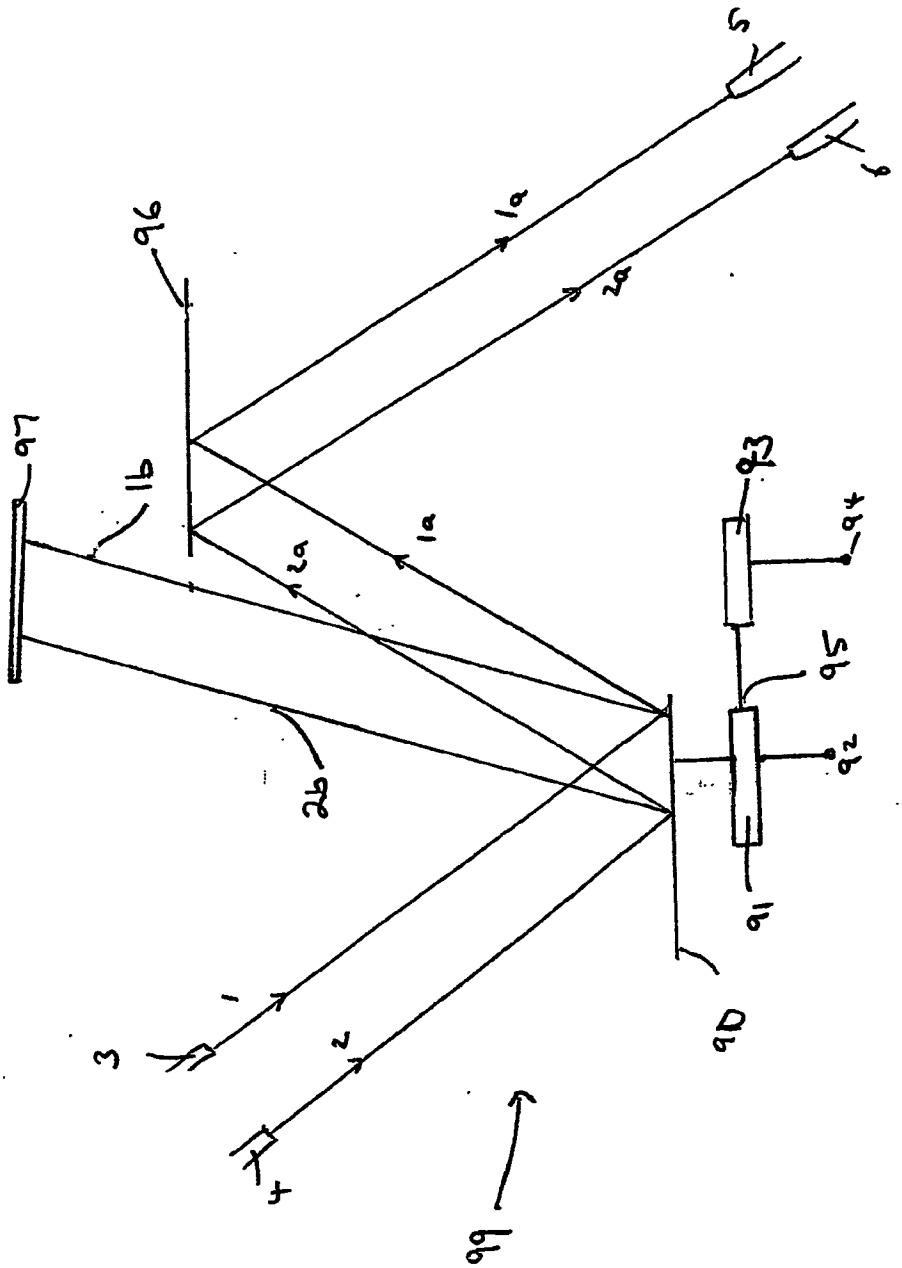

FIG 9

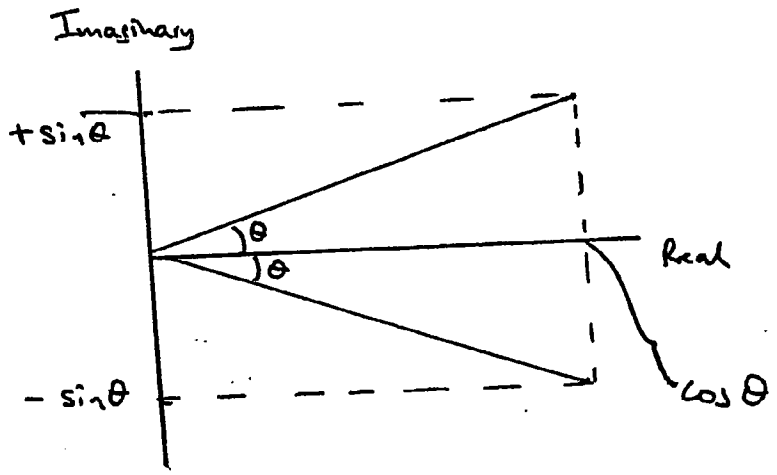

Fig 10

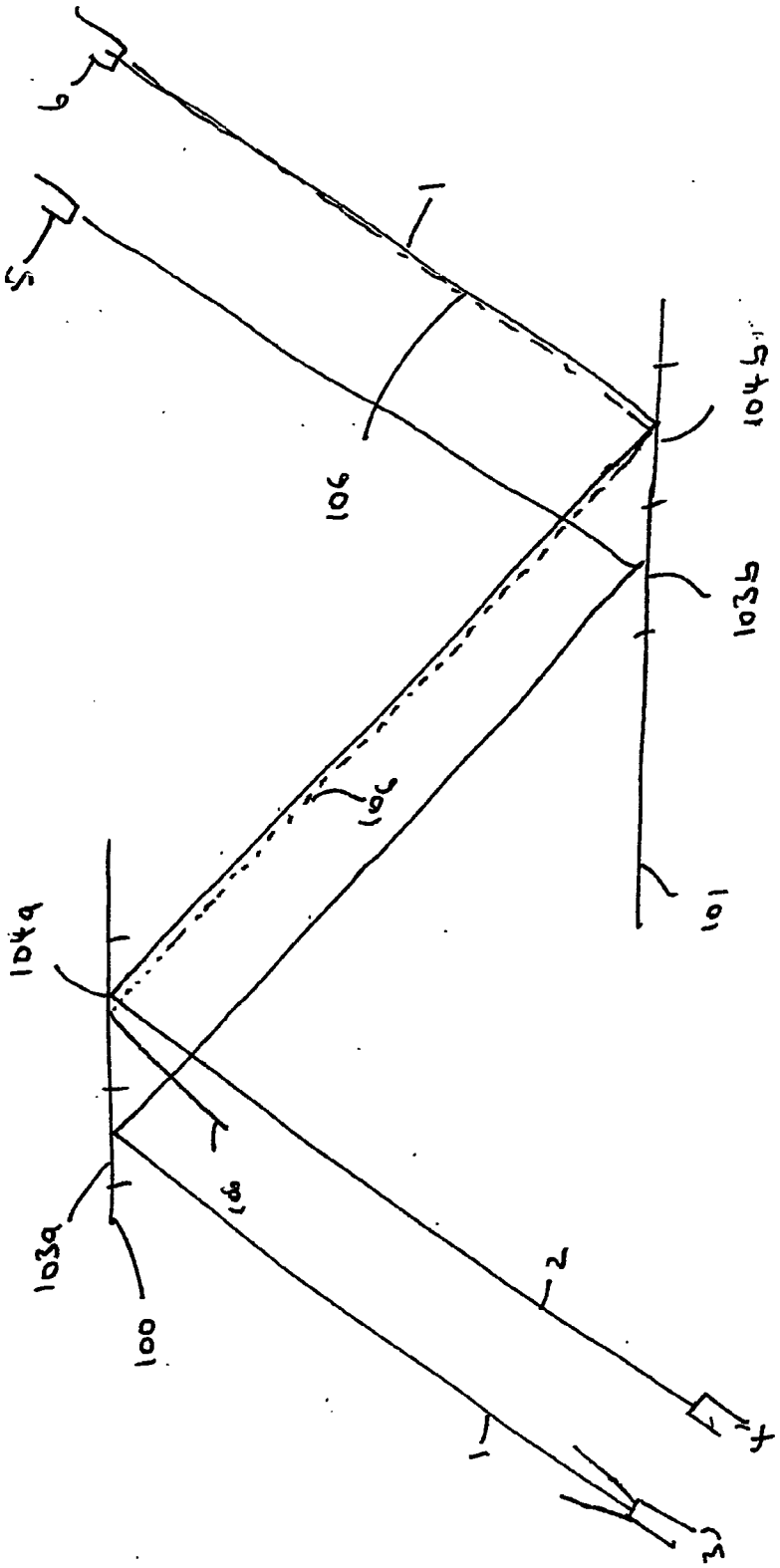

FIG 11

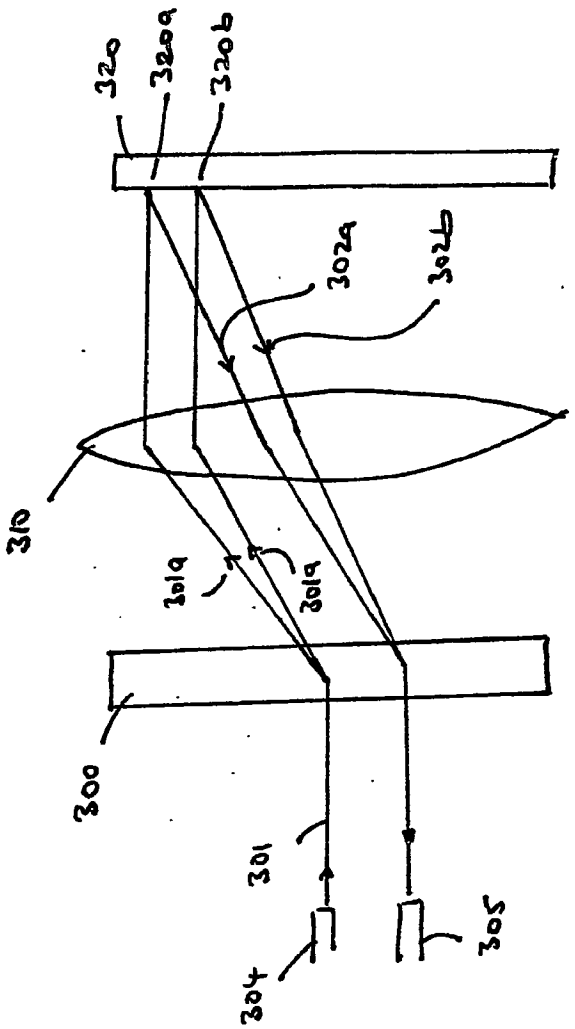

Fig 12

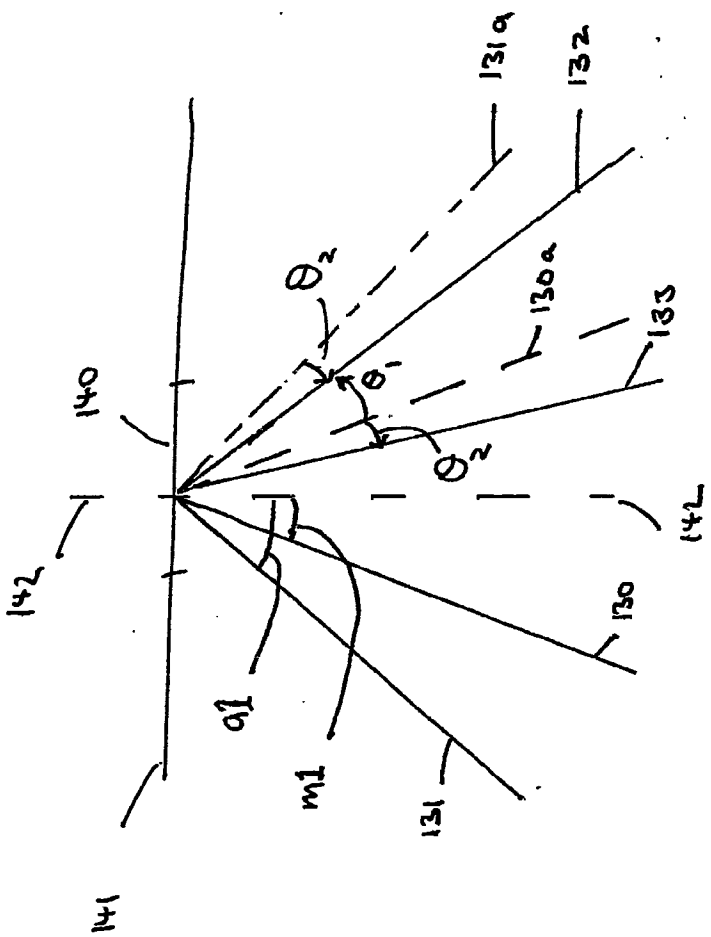

FIG 13

This Page is Inserted by IFW Indexing and Scanning Operations and is not part of the Official Record

BEST AVAILABLE IMAGES

Defective images within this document are accurate representations of the original documents submitted by the applicant.

Defects in the images include but are not limited to the items checked:

- ☐ BLACK BORDERS
- ☐ IMAGE CUT OFF AT TOP, BOTTOM OR SIDES
- ☐ FADED TEXT OR DRAWING
- ☐ BLURRED OR ILLEGIBLE TEXT OR DRAWING
- ☐ SKEWED/SLANTED IMAGES
- ☐ COLOR OR BLACK AND WHITE PHOTOGRAPHS
- ☐ GRAY SCALE DOCUMENTS
- ☒ LINES OR MARKS ON ORIGINAL DOCUMENT
- ☐ REFERENCE(S) OR EXHIBIT(S) SUBMITTED ARE POOR QUALITY
- ☐ OTHER: _____

IMAGES ARE BEST AVAILABLE COPY.
As rescanning these documents will not correct the image problems checked, please do not report these problems to the IFW Image Problem Mailbox.

Booker

DO/EO WORKSHEET

U.S. Appl. No. 10/487810 International Appl. No. PCT/GB02/04011

Application filed by : ☐ 20 months ☐ 30 months

WIPO PUBLICATION INFORMATION :

Publication No.: WO 03/021341 Publication Language : ☐ English ☐ Japanese ☐ German ☐ French ☐ Other : _____ Screening Done by : B

Publication Date : 13 Mar 03 Not Published : ☐ U.S. only designated ☐ EP request

INTERNATIONAL APPLICATION PAPERS IN THE APPLICATION FILE :

- ☒ International Application *(RECORD COPY)*
- ☐ Article 19 Amendments
- ☐ PCT/IB/331
- ☐ PCT/IPEA/409 IPER (PCT/IPEA/416 on front)
- ☐ Annexes to 409
- ☒ Priority Document (s) No. 1
- ☐ International Appl. on Double Sided Paper *(COPIES MADE)*
- ☐ Request form PCT/RO/101
- ☒ PCT/ISA/210 - Search Report
- ☐ Search Report References
- ☐ Other : Assertion of Small Entity 26 May 04

RECEIPTS FROM THE APPLICANT *(other than checked above)*

- ☒ Basic National Fee *(or authorization to charge)*
- ☒ Description 28/13
- ☒ Claims
- ☐ Words in the Drawing Figure(s)
- ☐ Article 19 Amendments
  - ☐ english transl. of annexes NOT present
  - ☐ entered ☐ not entered :
    - ☐ not a page for page substitution
    - ☐ other : _____
- ☐ Annexes to 409
  - ☐ english transl. of annexes NOT present
  - ☐ entered ☐ not entered :
    - ☐ not a page for page substitution
    - ☐ other : _____
- ☒ Preliminary Amendment(s) Filed on : 1. _____ 2. _____ 3. _____
- ☒ Information Disclosure Statement(s) Filed on : 1. _____ 2. _____ 3. _____
- ☐ Assignment Document
- ☒ Power of Attorney/ Change of Address 10 Sep 2004
- ☐ Substitute Specification Filed on : 1. _____ 2. _____
- ☒ Verified Small Status Statement (executed) 10 Sep 2004
- ☒ Oath/ Declaration (executed) 10 Sep 2004
  - ☐ surcharge was paid at the time of filing
- ☐ DNA Diskette
- ☐ Other : 1. _____ 2. _____

NOTES : ☐ I.A. used as Specification ☐ Other :

35 U.S.C. 371 - Receipt of Request (PTO-1390) 36 prints
Date Acceptable Oath/ Declaration Received
Date of Completion of requirements under 35 U.S.C. 371
102(e) Date
Date of Completion of DO/ EO 906 - Notification of Missing 102(e) Requirements
Date of Completion of DO/ EO 907 - Notification of Acceptance for 102(e) Date
Date of Completion of DO/ EO 911 - Application Accepted Under 35 U.S.C. 111
Date of Completion of DO/ EO 905 - Notification of Missing Requirements
Date of Completion of DO/ EO 916 - Notification of Defective Response
Date of Completion of DO/ EO 903 - Notification of Acceptance
Date of Completion of DO/ EO 909 - Notification of Abandonment

PATENT COOPERATION TREATY

RECEIVED 3 MAR 2003

From the INTERNATIONAL SEARCHING AUTHORITY

PCT

NOTIFICATION OF TRANSMITTAL OF THE INTERNATIONAL SEARCH REPORT OR THE DECLARATION

(PCT Rule 44.1)

To:
W. H. BECK, GREENER & CO.
Attn. Neobard, William J.
7 Stone Buildings
Lincoln's Inn
London WC2A 3SZ
UNITED KINGDOM

Date of mailing *(day/month/year)* 27/02/2003	
Applicant's or agent's file reference WJN/P9177WO	**FOR FURTHER ACTION** See paragraphs 1 and 4 below
International application No. PCT/GB 02/04011	International filing date *(day/month/year)* 02/09/2002
Applicant THOMAS SWAN & CO. LTD.	

1. [X] The applicant is hereby notified that the International Search Report has been established and is transmitted herewith.

Filing of amendments and statement under Article 19:
The applicant is entitled, if he so wishes, to amend the claims of the International Application (see Rule 46):

When? The time limit for filing such amendments is normally 2 months from the date of transmittal of the International Search Report; however, for more details, see the notes on the accompanying sheet.

Where? Directly to the International Bureau of WIPO
34, chemin des Colombettes
1211 Geneva 20, Switzerland
Fascimile No.: (41-22) 740.14.35

For more detailed instructions, see the notes on the accompanying sheet.

2. [ ] The applicant is hereby notified that no International Search Report will be established and that the declaration under Article 17(2)(a) to that effect is transmitted herewith.

3. [ ] **With regard to the protest** against payment of (an) additional fee(s) under Rule 40.2, the applicant is notified that:

[ ] the protest together with the decision thereon has been transmitted to the International Bureau together with the applicant's request to forward the texts of both the protest and the decision thereon to the designated Offices.

[ ] no decision has been made yet on the protest; the applicant will be notified as soon as a decision is made.

4. **Further action(s):** The applicant is reminded of the following:

Shortly after **18 months** from the priority date, the international application will be published by the International Bureau. If the applicant wishes to avoid or postpone publication, a notice of withdrawal of the international application, or of the priority claim, must reach the International Bureau as provided in Rules 90*bis*.1 and 90*bis*.3, respectively, before the completion of the technical preparations for international publication.

Within **19 months** from the priority date, a demand for international preliminary examination must be filed if the applicant wishes to postpone the entry into the national phase until 30 months from the priority date (in some Offices even later).

Within **20 months** from the priority date, the applicant must perform the prescribed acts for entry into the national phase before all designated Offices which have not been elected in the demand or in a later election within 19 months from the priority date or could not be elected because they are not bound by Chapter II.

Name and mailing address of the International Searching Authority	Authorized officer
European Patent Office, P.B. 5818 Patentlaan 2 NL-2280 HV Rijswijk Tel. (+31-70) 340-2040, Tx. 31 651 epo nl, Fax: (+31-70) 340-3016	Jacinta Reddy

Form PCT/ISA/220 (July 1998)

NOTES TO FORM PCT/ISA/220

These Notes are intended to give the basic instructions concerning the filing of amendments under article 19. The Notes are based on the requirements of the Patent Cooperation Treaty, the Regulations and the Administrative Instructions under that Treaty. In case of discrepancy between these Notes and those requirements, the latter are applicable. For more detailed information, see also the PCT Applicant's Guide, a publication of WIPO.

In these Notes, "Article", "Rule", and "Section" refer to the provisions of the PCT, the PCT Regulations and the PCT Administrative Instructions, respectively.

INSTRUCTIONS CONCERNING AMENDMENTS UNDER ARTICLE 19

The applicant has, after having received the international search report, one opportunity to amend the claims of the international application. It should however be emphasized that, since all parts of the international application (claims, description and drawings) may be amended during the international preliminary examination procedure, there is usually no need to file amendments of the claims under Article 19 except where, e.g. the applicant wants the latter to be published for the purposes of provisional protection or has another reason for amending the claims before international publication. Furthermore, it should be emphasized that provisional protection is available in some States only.

What parts of the international application may be amended?

Under Article 19, only the claims may be amended.

During the international phase, the claims may also be amended (or further amended) under Article 34 before the International Preliminary Examining Authority. The description and drawings may only be amended under Article 34 before the International Examining Authority.

Upon entry into the national phase, all parts of the international application may be amended under Article 28 or, where applicable, Article 41.

When?

Within 2 months from the date of transmittal of the international search report or 16 months from the priority date, whichever time limit expires later. It should be noted, however, that the amendments will be considered as having been received on time if they are received by the International Bureau after the expiration of the applicable time limit but before the completion of the technical preparations for international publication (Rule 46.1).

Where not to file the amendments?

The amendments may only be filed with the International Bureau and not with the receiving Office or the International Searching Authority (Rule 46.2).

Where a demand for international preliminary examination has been/is filed, see below.

How?

Either by cancelling one or more entire claims, by adding one or more new claims or by amending the text of one or more of the claims as filed.

A replacement sheet must be submitted for each sheet of the claims which, on account of an amendment or amendments, differs from the sheet originally filed.

All the claims appearing on a replacement sheet must be numbered in Arabic numerals. Where a claim is cancelled, no renumbering of the other claims is required. In all cases where claims are renumbered, they must be renumbered consecutively (Administrative Instructions, Section 205(b)).

The amendments must be made in the language in which the international application is to be published.

What documents must/may accompany the amendments?

Letter (Section 205(b)):

The amendments must be submitted with a letter.

The letter will not be published with the international application and the amended claims. It should not be confused with the "Statement under Article 19(1)" (see below, under "Statement under Article 19(1)").

The letter must be in English or French, at the choice of the applicant. However, if the language of the international application is English, the letter must be in English; if the language of the international application is French, the letter must be in French.

The letter must indicate the differences between the claims as filed and the claims as amended. It must, in particular, indicate, in connection with each claim appearing in the international application (it being understood that identical indications concerning several claims may be grouped),whether

(i) the claim is unchanged;

(ii) the claim is cancelled;

(iii) the claim is new;

(iv) the claim replaces one or more claims as filed;

(v) the claim is the result of the division of a claim as filed.

The following examples illustrate the manner in which amendments must be explained in the accompanying letter:

1. [Where originally there were 48 claims and after amendment of some claims there are 51]:
"Claims 1 to 29, 31, 32, 34, 35, 37 to 48 replaced by amended claims bearing the same numbers; claims 30, 33 and 36 unchanged; new claims 49 to 51 added."

2. [Where originally there were 15 claims and after amendment of all claims there are 11]:
"Claims 1 to 15 replaced by amended claims 1 to 11."

3. [Where originally there were 14 claims and the amendments consist in cancelling some claims and in adding new claims]:
"Claims 1 to 6 and 14 unchanged; claims 7 to 13 cancelled; new claims 15, 16 and 17 added." or
"Claims 7 to 13 cancelled; new claims 15, 16 and 17 added; all other claims unchanged."

4. [Where various kinds of amendments are made]:
"Claims 1-10 unchanged; claims 11 to 13, 18 and 19 cancelled; claims 14, 15 and 16 replaced by amended claim 14; claim 17 subdivided into amended claims 15, 16 and 17; new claims 20 and 21 added."

"Statement under article 19(1)" (Rule 46.4)

The amendments may be accompanied by a statement explaining the amendments and indicating any impact that such amendments might have on the description and the drawings (which cannot be amended under Article 19(1)).

The statement will be published with the international application and the amended claims.

It must be in the language in which the international application is to be published.

It must be brief, not exceeding 500 words if in English or if translated into English.

It should not be confused with and does not replace the letter indicating the differences between the claims as filed and as amended. It must be filed on a separate sheet and must be identified as such by a heading, preferably by using the words "Statement under Article 19(1)."

It may not contain any disparaging comments on the international search report or the relevance of citations contained in that report. Reference to citations, relevant to a given claim, contained in the international search report may be made only in connection with an amendment of that claim.

Consequence if a demand for international preliminary examination has already been filed

If, at the time of filing any amendments and any accompanying statement, under Article 19, a demand for international preliminary examination has already been submitted, the applicant must preferably, at the time of filing the amendments (and any statement) with the International Bureau, also file with the International Preliminary Examining Authority a copy of such amendments (and of any statement) and, where required, a translation of such amendments for the procedure before that Authority (see Rules 55.3(a) and 62.2, first sentence). For further information, see the Notes to the demand form (PCT/IPEA/401).

Consequence with regard to translation of the international application for entry into the national phase

The applicant's attention is drawn to the fact that, upon entry into the national phase, a translation of the claims as amended under Article 19 may have to be furnished to the designated/elected Offices, instead of, or in addition to, the translation of the claims as filed.

For further details on the requirements of each designated/elected Office, see Volume II of the PCT Applicant's Guide.

PATENT COOPERATION TREATY

PCT

INTERNATIONAL SEARCH REPORT

(PCT Article 18 and Rules 43 and 44)

Applicant's or agent's file reference	FOR FURTHER ACTION	see Notification of Transmittal of International Search Report (Form PCT/ISA/220) as well as, where applicable, item 5 below.
WJN/P9177WO		
International application No.	International filing date *(day/month/year)*	(Earliest) Priority Date *(day/month/year)*
PCT/GB 02/04011	02/09/2002	03/09/2001
Applicant		
THOMAS SWAN & CO. LTD.		

This International Search Report has been prepared by this International Searching Authority and is transmitted to the applicant according to Article 18. A copy is being transmitted to the International Bureau.

This International Search Report consists of a total of 07 sheets.

[X] It is also accompanied by a copy of each prior art document cited in this report.

1. **Basis of the report**

a. With regard to the **language,** the international search was carried out on the basis of the international application in the language in which it was filed, unless otherwise indicated under this item.

[ ] the international search was carried out on the basis of a translation of the international application furnished to this Authority (Rule 23.1(b)).

b. With regard to any **nucleotide and/or amino acid sequence** disclosed in the international application, the international search was carried out on the basis of the sequence listing :

[ ] contained in the international application in written form.

[ ] filed together with the international application in computer readable form.

[ ] furnished subsequently to this Authority in written form.

[ ] furnished subsequently to this Authority in computer readble form.

[ ] the statement that the subsequently furnished written sequence listing does not go beyond the disclosure in the international application as filed has been furnished.

[ ] the statement that the information recorded in computer readable form is identical to the written sequence listing has been furnished

2. [ ] **Certain claims were found unsearchable** (See Box I).

3. [X] **Unity of invention is lacking** (see Box II).

4. With regard to the **title,**

[X] the text is approved as submitted by the applicant.

[ ] the text has been established by this Authority to read as follows:

5. With regard to the **abstract,**

[ ] the text is approved as submitted by the applicant.

[X] the text has been established, according to Rule 38.2(b), by this Authority as it appears in Box III. The applicant may, within one month from the date of mailing of this international search report, submit comments to this Authority.

6. The figure of the **drawings** to be published with the abstract is Figure No. 3, 4

[ ] as suggested by the applicant.

[ ] because the applicant failed to suggest a figure.

[X] because this figure better characterizes the invention.

[ ] None of the figures.

INTERNATIONAL SEARCH REPORT

International application No.
PCT/GB 02/04011

Box III TEXT OF THE ABSTRACT (Continuation of Item 5 of the first sheet)

To operate an optical device comprising an SLM (20,21) with a two-dimensional array of controllable phase-modulating elements, groups of individual phase-modulating elements (13,14) are delineated, and control data selected from a store (124) for each delineated group of phase-modulating elements. The selected control data are used to generate (122) holograms at each group and one or both of the delineation of the groups and the selection of control data is/are varied. In this way upon illumination of the groups by light beams (1,2), light beams emergent from the groups are controllable independently of each other, wherein said control includes control of direction (e.g. a routing device), control of power, focussing, aberration compensation, sampling, beam shaping and wavelength filtering (e.g. a wavelength add drop multiplexer.)

INTERNATIONAL SEARCH REPORT

International Application No
PCT/GB 02/04011

A. CLASSIFICATION OF SUBJECT MATTER
IPC 7 G03H1/08 G02B5/32 G02F1/313 G02B6/42 G02B6/34

According to International Patent Classification (IPC) or to both national classification and IPC

B. FIELDS SEARCHED

Minimum documentation searched (classification system followed by classification symbols)
IPC 7 G03H G02B G02F H04J

Documentation searched other than minimum documentation to the extent that such documents are included in the fields searched

Electronic data base consulted during the international search (name of data base and, where practical, search terms used)
EPO-Internal

C. DOCUMENTS CONSIDERED TO BE RELEVANT

Category °	Citation of document, with indication, where appropriate, of the relevant passages	Relevant to claim No.
X,P	WO 01 90823 A (INTELLIGENT PIXELS INC) 29 November 2001 (2001-11-29) page 8, line 7 -page 9, line 25 page 11, line 17 -page 13, line 12 page 14, line 3 -page 15, line 25 page 16, line 10-18; figures 2A,5	1,2,4-6, 9,11,12, 14,15, 20,22
X	WO 01 25848 A (CROSSLAND WILLIAM ;WILKINSON TIMOTHY (GB); REDMOND MAURA (GB); WAR) 12 April 2001 (2001-04-12) page 18-49; figures 2,7,9-14	1-6, 9-12,14, 20-22
X	WO 01 25840 A (CROSSLAND WILLIAM ;WILKINSON TIMOTHY (GB); REDMOND MAURA (GB); HOL) 12 April 2001 (2001-04-12) claim 17; figures 3-5,8	1,8,9

-/--

[X] Further documents are listed in the continuation of box C.

[X] Patent family members are listed in annex.

° Special categories of cited documents :

"A" document defining the general state of the art which is not considered to be of particular relevance

"E" earlier document but published on or after the international filing date

"L" document which may throw doubts on priority claim(s) or which is cited to establish the publication date of another citation or other special reason (as specified)

"O" document referring to an oral disclosure, use, exhibition or other means

"P" document published prior to the international filing date but later than the priority date claimed

"T" later document published after the international filing date or priority date and not in conflict with the application but cited to understand the principle or theory underlying the invention

"X" document of particular relevance; the claimed invention cannot be considered novel or cannot be considered to involve an inventive step when the document is taken alone

"Y" document of particular relevance; the claimed invention cannot be considered to involve an inventive step when the document is combined with one or more other such documents, such combination being obvious to a person skilled in the art.

"&" document member of the same patent family

Date of the actual completion of the international search	Date of mailing of the international search report
19 February 2003	27.02.03

Name and mailing address of the ISA	Authorized officer
European Patent Office, P.B. 5818 Patentlaan 2 NL - 2280 HV Rijswijk Tel. (+31-70) 340-2040, Tx. 31 651 epo nl, Fax: (+31-70) 340-3016	Noirard, P

2

Form PCT/ISA/210 (second sheet) (July 1992)

INTERNATIONAL SEARCH REPORT

International Application No
PCT/GB 02/04011

C.(Continuation) DOCUMENTS CONSIDERED TO BE RELEVANT

Category °	Citation of document, with indication, where appropriate, of the relevant passages	Relevant to claim No.
X	US 5 539 543 A (LIU HUA-KUANG ET AL) 23 July 1996 (1996-07-23) column 5, line 25-57	22
A	MEARS R J ET AL: "TELECOMMUNICATIONS APPLICATIONS OF FERROELECTRIC LIQUID-CRYSTAL SMART PIXELS" IEEE JOURNAL OF SELECTED TOPICS IN QUANTUM ELECTRONICS, IEEE SERVICE CENTER, US, vol. 2, no. 1, April 1996 (1996-04), pages 35-46, XP002155684 ISSN: 1077-260X	
E	WO 02 101451 A (HONEYWELL INT INC) 19 December 2002 (2002-12-19) figure 5	23-27
X	MEARS R J ET AL: "WDM CHANNEL MANAGEMENT USING PROGRAMMABLE HOLOGRAPHIC ELEMENTS" IEE COLLOQUIUM ON MULTIWAVELENGTH OPTICAL NETWORKS: DEVICES, SYSTEMS AND NETWORK IMPLEMENTATIONS, IEE, LONDON, GB, 18 June 1998 (1998-06-18), pages 11-1-11-6, XP000783511	23-25,27
A	page 11-5; figure 7	16,17, 19,28
X	US 5 107 359 A (OHUCHIDA SHIGERU) 21 April 1992 (1992-04-21) figures 1,3	24,27
A	PAN CI-LING ET AL: "Tunable semiconductor laser with liquid crystal pixel mirror in grating-loaded external cavity" ELECTRONICS LETTERS, IEE STEVENAGE, GB, vol. 35, no. 17, 19 August 1999 (1999-08-19), pages 1472-1473, XP006012546 ISSN: 0013-5194 figure 1	16,17

2

INTERNATIONAL SEARCH REPORT

International application No.
PCT/GB 02/04011

Box I Observations where certain claims were found unsearchable (Continuation of item 1 of first sheet)

This International Search Report has not been established in respect of certain claims under Article 17(2)(a) for the following reasons:

1. ☐ Claims Nos.:
because they relate to subject matter not required to be searched by this Authority, namely:

2. ☐ Claims Nos.:
because they relate to parts of the International Application that do not comply with the prescribed requirements to such an extent that no meaningful International Search can be carried out, specifically:

3. ☐ Claims Nos.:
because they are dependent claims and are not drafted in accordance with the second and third sentences of Rule 6.4(a).

Box II Observations where unity of invention is lacking (Continuation of item 2 of first sheet)

This International Searching Authority found multiple inventions in this international application, as follows:

see additional sheet

1. ☒ As all required additional search fees were timely paid by the applicant, this International Search Report covers all searchable claims.

2. ☐ As all searchable claims could be searched without effort justifying an additional fee, this Authority did not invite payment of any additional fee.

3. ☐ As only some of the required additional search fees were timely paid by the applicant, this International Search Report covers only those claims for which fees were paid, specifically claims Nos.:

4. ☐ No required additional search fees were timely paid by the applicant. Consequently, this International Search Report is restricted to the invention first mentioned in the claims; it is covered by claims Nos.:

Remark on Protest

☐ The additional search fees were accompanied by the applicant's protest.

☒ No protest accompanied the payment of additional search fees.

FURTHER INFORMATION CONTINUED FROM PCT/ISA/ 210

This International Searching Authority found multiple (groups of) inventions in this international application, as follows:

1. Claims: 1-15,20-22

An optical device and corresponding method of operating comprising a Spatial Light Modulator (SLM), on which a Computer generated Hologram (CGH) is applied for controlling the direction, power, or shape of light beams

2. Claims: 16-19,23-28

An optical device for filtering or routing light beams according to their wavelengths.

INTERNATIONAL SEARCH REPORT

Information on patent family members

International Application No
PCT/GB 02/04011

Patent document cited in search report	Publication date	Patent family member(s)	Publication date
WO 0190823 A	29-11-2001	AU 7125301 A	03-12-2001
		WO 0190823 A1	29-11-2001
		US 2001050787 A1	13-12-2001
WO 0125848 A	12-04-2001	AU 7542300 A	10-05-2001
		AU 7543500 A	10-05-2001
		EP 1222494 A1	17-07-2002
		EP 1221068 A2	10-07-2002
		WO 0125840 A1	12-04-2001
		WO 0125848 A2	12-04-2001
WO 0125840 A	12-04-2001	AU 7542300 A	10-05-2001
		AU 7543500 A	10-05-2001
		EP 1222494 A1	17-07-2002
		EP 1221068 A2	10-07-2002
		WO 0125840 A1	12-04-2001
		WO 0125848 A2	12-04-2001
US 5539543 A	23-07-1996	NONE	
WO 02101451 A	19-12-2002	US 2002191913 A1	19-12-2002
		WO 02101451 A1	19-12-2002
US 5107359 A	21-04-1992	JP 2143203 A	01-06-1990

10/487810
Rec'd PCT/PTO 26 FEB 2004

(12) INTERNATIONAL APPLICATION PUBLISHED UNDER THE PATENT COOPERATION TREATY (PCT)

(19) World Intellectual Property Organization
International Bureau

(43) International Publication Date
13 March 2003 (13.03.2003)

PCT

(10) International Publication Number
WO 03/021341 A2

(51) International Patent Classification[7]: G02F 1/00

(21) International Application Number: PCT/GB02/04011

(22) International Filing Date:
2 September 2002 (02.09.2002)

(25) Filing Language: English

(26) Publication Language: English

(30) Priority Data:
0121308.1 3 September 2001 (03.09.2001) GB

(71) Applicant *(for all designated States except US)*: **THOMAS SWAN & CO. LTD.** [GB/GB]; Crookhall, Consett, Co. Durham DH8 7ND (GB).

(72) Inventor; and

(75) Inventor/Applicant *(for US only)*: **HOLMES, Melanie** [GB/GB]; 39 Orford Street, Ipswich IP1 3PE (GB).

(74) Agent: **NEOBARD, William, J.**; W.H. Beck, Greener & Co., 7 Stone Buildings, Lincoln's Inn, London WC2A 3SZ (GB).

(81) Designated States *(national)*: AE, AG, AL, AM, AT, AU, AZ, BA, BB, BG, BR, BY, BZ, CA, CH, CN, CO, CR, CU, CZ, DE, DK, DM, DZ, EC, EE, ES, FI, GB, GD, GE, GH, GM, HR, HU, ID, IL, IN, IS, JP, KE, KG, KP, KR, KZ, LC, LK, LR, LS, LT, LU, LV, MA, MD, MG, MK, MN, MW, MX, MZ, NO, NZ, OM, PH, PL, PT, RO, RU, SD, SE, SG, SI, SK, SL, TJ, TM, TN, TR, TT, TZ, UA, UG, US, UZ, VC, VN, YU, ZA, ZM, ZW.

(84) Designated States *(regional)*: ARIPO patent (GH, GM, KE, LS, MW, MZ, SD, SL, SZ, TZ, UG, ZM, ZW), Eurasian patent (AM, AZ, BY, KG, KZ, MD, RU, TJ, TM), European patent (AT, BE, BG, CH, CY, CZ, DE, DK, EE, ES, FI, FR, GB, GR, IE, IT, LU, MC, NL, PT, SE, SK, TR), OAPI patent (BF, BJ, CF, CG, CI, CM, GA, GN, GQ, GW, ML, MR, NE, SN, TD, TG).

[Continued on next page]

(54) Title: OPTICAL PROCESSING

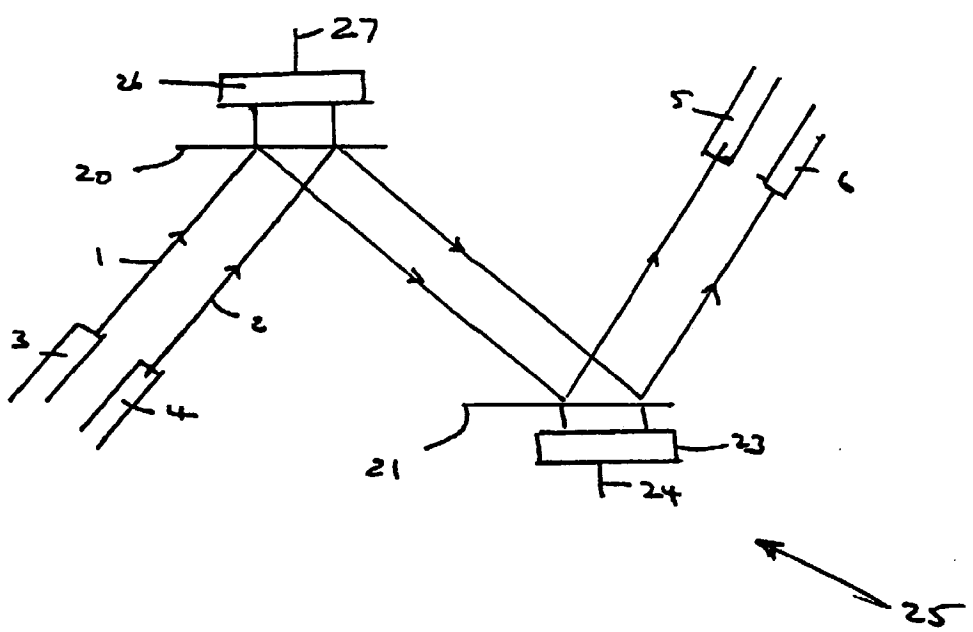

(57) Abstract: To operate an optical device comprising an SLM with a two-dimensional array of controllable phase-modulating elements groups of individual phase-modulating elements are delineated, and control data selected from a store for each delineated group of phase-modulating elements. The selected control data are used to generate holograms at each group and one or both of the delineation of the groups and the selection of control data is/are varied. In this way upon illumination of the groups by light beams, light beams emergent from the groups are controllable independently of each other.

WO 03/021341 A2

Published:
— *without international search report and to be republished upon receipt of that report*

For two-letter codes and other abbreviations, refer to the "Guidance Notes on Codes and Abbreviations" appearing at the beginning of each regular issue of the PCT Gazette.

OPTICAL PROCESSING

Field of the invention

The present invention relates to an optical device and to a method of controlling an optical device.

More particularly but not exclusively the invention relates to the general field of controlling one or more light beams by the use of electronically controlled devices. The field of application is mainly envisaged as being to fields in which reconfiguration between inputs and outputs is likely, and stability of performance is a significant requirement.

Background of the invention

It has previously been proposed to use so-called spatial light modulators to control the routing of light beams within an optical system, for instance from selected ones of a number of input optical fibres to selected ones of output fibres.

Optical systems are subject to performance impairments resulting from aberrations, phase distortions and component misalignment. An example is a multiway fibre connector, which although conceptually simple can often be a critical source of system failure or insertion loss due to the very tight alignment tolerances for optical fibres, especially for single-mode optical fibres. Every time a fibre connector is connected, it may provide a different alignment error. Another example is an optical switch in

which aberrations, phase distortions and component misalignments result in poor optical coupling efficiency into the intended output optical fibres. This in turn may lead to high insertion loss. The aberrated propagating waves may diffract into intensity fluctuations creating significant unwanted coupling of light into other output optical fibres, leading to levels of crosstalk that impede operation. In some cases, particularly where long path lengths are involved, the component misalignment may occur due to ageing or temperature effects.

Some prior systems seek to meet such problems by use of expensive components. For example in a communications context, known free-space wavelength multiplexers and demultiplexers use expensive thermally stable opto-mechanics to cope with the problems associated with long path lengths.

Certain optical systems have a requirement for reconfigurability. Such reconfigurable systems include optical switches, add/drop multiplexers and other optical routing systems where the mapping of signals from input ports to output ports is dynamic. In such systems the path-dependent losses, aberrations and phase distortions encountered by optical beams may vary from beam to beam according to the route taken by the beam through the system. Therefore the path-dependent loss, aberrations and phase distortions may vary for each input beam or as a function of the required output port.

The prior art does not adequately address this situation.

Other optical systems are static in terms of input/output configuration. In such systems, effects such as assembly errors, manufacturing tolerances in the optics and also changes in the system behaviour due to temperature and ageing, create the desirability for dynamic direction control, aberration correction, phase distortion compensation or misalignment compensation.

It should be noted that the features of dynamic direction control, phase distortion compensation and misalignment control are not restricted to systems using input beams coming from optical fibres. Such features may also be advantageous in a reconfigurable optical system. Another static system in which dynamic control of phase distortion, direction and (relative) misalignment would be advantageous is one in which the quality and/or position of the input beams is time-varying.

Often the input and output beams for optical systems contain a multiplex of many optical signals at different wavelengths, and these signals may need to be separated and adaptively and individually processed inside the system. Sometimes, although the net aim of a system is not to separate optical signals according to their wavelength and then treat them separately, to do so increases the wavelength range of the system as a whole. Where this separation is effected, it is often advantageous for the device used to route each channel to have a low insertion loss and to operate quickly.

It is an aim of some aspects of the present invention at least partly to mitigate difficulties of the prior art.

It is desirable for certain applications that a method or device for addressing these issues should be polarisation-independent, or have low polarisation-dependence.

SLMs have been proposed for use as adaptive optical components in the field of astronomical devices, for example as wavefront correctors. In this field of activity, the constraints are different to the present field - for example in communication and like devices, the need for consistent performance is paramount if data is to be passed without errors. Communication and like devices are desirably inexpensive, and desirably inhabit and successfully operate in environments that are not closely controlled. By contrast, astronomical devices may be used in conditions more akin to laboratory conditions, and cost constraints are less pressing. Astronomical devices are unlikely to need to select successive routings of light within a system, and variations in performance may be acceptable.

Summary of the invention

According to a first aspect of the invention, there is provided a method of operating an optical device comprising an SLM having a two-dimensional array of controllable phase-modulating elements, the method comprising

delineating groups of individual phase-modulating elements;

selecting, from stored control data, control data for each group of phase-modulating elements;

generating from the respective selected control data a respective hologram at each group of phase-modulating elements; and

varying the delineation of the groups and /or the selection of control data whereby upon illumination of said groups by respective light beams, respective emergent light beams from the groups are controllable independently of each other.

In some embodiments, the variation of the delineation and /or control data selection is in response to a signal or signals indicating a non-optimal performance of the device. In other embodiments, the variation is performed during a set up or training phase of the device. In yet other embodiments, the variation is in response to an operating signal, for example a signal giving the result of sensing non-performance system parameters such as temperature.

An advantage of the method of this aspect of the invention is that stable operation can be achieved in the presence of effects such as ageing, temperature, component, change of path through the system and assembly tolerances.

Preferably, control of said light beams is selected from the group comprising: control of direction, control of power, focussing, aberration compensation, sampling and beam shaping.

Clearly in most situations more than one of these control types will be needed - for example in a routing device (such as a switch, filter or add/drop multiplexer) primary changes of direction are likely to be needed to cope with changes of routing as part of the main system but secondary correction will be needed to cope with effects such as temperature and ageing. Additionally such systems may also need to control power, and to allow sampling (both of which may in some cases be achieved by direction changes).

Advantageously, each phase modulating element is responsive to a respective applied voltage to provide a corresponding phase shift to emergent light, and the method further comprises;

controlling said phase-modulating elements of the spatial light modulator to provide respective actual holograms derived from the respective generated holograms, wherein the controlling step comprises;

resolving the respective generated holograms modulo 2pi.

The preferred SLM uses a liquid crystal material to provide phase shift and the liquid crystal material is not capable of large phase shifts beyond plus or minus 2 pi. Some liquid crystal materials can only provide a smaller range of phase shifts, and if such materials are used, the resolution of the generated hologram is correspondingly smaller.

Preferably the method comprises:

providing a discrete number of voltages available for application to each phase modulating element;

on the basis of the respective generated holograms, determining the desired level of phase modulation at a predetermined point on each phase modulating element and choosing for each phase modulating element the available voltage which corresponds most closely to the desired level.

Where a digital control device is used, the resolution of the digital signal does not provide a continuous spectrum of available voltages. One way of coping with this is to determine the desired modulation for each pixel and to choose the individual voltage which will provide the closest modulation to the desired level.

In another embodiment, the method comprises:

providing a discrete number of voltages available for application to each phase modulating element;

determining a subset of the available voltages which provides the best fit to the generated hologram.

Another technique is to look at the pixels of the group as a whole and to select from the available voltages those that give rise to the nearest phase modulation across the whole group.

Advantageously, the method further comprises the step of storing said control data wherein the step of storing said control data comprises calculating an initial hologram using a desired direction change of a beam of light, applying said initial hologram to a group of phase

modulating elements, and correcting the initial hologram to obtain an improved result.

The method may further comprise the step of providing sensors for detecting temperature change, and performing said varying step in response to the outputs of those sensors.

The SLM may be integrated on a substrate and have an integral quarter-wave plate whereby it is substantially polarisation insensitive.

Preferably the phase-modulating elements are substantially reflective, whereby emergent beams are deflected from the specular reflection direction.

In some aspects, for at least one said group of pixels, the method comprises providing control data indicative of two holograms to be displayed by said group and generating a combined hologram before said resolving step.

According to a second aspect of the invention there is provided an optical device comprising an SLM and a control circuit, the SLM having a two-dimensional array of controllable phase-modulating elements and the control circuit having a store constructed and arranged to hold plural items of control data, the control circuit being constructed and arranged to delineate groups of individual phase-modulating elements, to select, from stored control data, control data for each group of phase-modulating elements, and to generate from the respective selected

control data a respective hologram at each group of phase-modulating elements,

wherein the control circuit is further constructed and arranged, to vary the delineation of the groups and/or the selection of control data

whereby upon illumination of said groups by respective light beams, respective emergent light beams from the groups are controllable independently of each other.

An advantage of the device of this aspect of the invention is that stable operation can be achieved in the presence of effects such as ageing, temperature, component and assembly tolerances. Embodiments of the device can handle many light beams simultaneously. Embodiments can be wholly reconfigurable, for example compensating differently for a number of routing configurations.

Preferably, the optical device has sensor devices arranged to detect light emergent from the SLM, the control circuit being responsive to signals from the sensors to vary said delineation and/or said selection.

In some embodiments, the optical device has temperature responsive devices constructed and arranged to feed signals indicative of device temperature to said control circuit, whereby said delineation and/or selection is varied.

In another aspect, the invention provides an optical routing device having at least first and second SLMs and a control circuit, the first SLM being disposed to receive respective light beams from an input fibre array, and the

second SLM being disposed to receive emergent light from the first SLM and to provide light to an output fibre array, the first and second SLMs each having a respective two-dimensional array of controllable phase-modulating elements and the control circuit having a store constructed and arranged to hold plural items of control data, the control circuit being constructed and arranged to delineate groups of individual phase-modulating elements, to select, from stored control data, control data for each group of phase-modulating elements, and to generate from the respective selected control data a respective hologram at each group of phase-modulating elements,

wherein the control circuit is further constructed and arranged, to vary the delineation of the groups and /or the selection of control data

whereby upon illumination of said groups by respective light beams, respective emergent light beams from the groups are controllable independently of each other.

In a further aspect, the invention provides a device for shaping one or more light beams in which the or each light beam is incident upon a respective group of pixels of a two-dimensional SLM, and the pixels of the or each respective group are controlled so that the corresponding beams emerging from the SLM are shaped as required.

According to a further aspect of the invention there is provided an optical device comprising one or more optical inputs at respective locations, a diffraction grating constructed and arranged to receive light from the or each optical input, a focussing device and a continuous array of phase modulating elements, the diffraction grating

and the array of phase modulating elements being disposed in the focal plane of the focussing device whereby diverging light from a single point on the diffraction grating passes via the focussing device to form beams at the array of phase modulating elements, the device further comprising one or more optical output at respective locations spatially separate from the or each optical input, whereby the diffraction grating is constructed and arranged to output light to the or each optical output.

This device allows multiwavelength input light to be distributed in wavelength terms across different groups of phase-modulating elements. This allows different processing effects to be applied to any desired part or parts of the spectrum.

According to a still further aspect of the invention there is provided a method of filtering light comprising applying a beam of said light to a diffraction grating whereby emerging light from the grating is angularly dispersed by wavelength, forming respective beams from said emerging light by passing the emerging light to a focussing device having the grating at its focal plane, passing the respective beams to an SLM at the focal plane of the focussing device, the SLM having a two-dimensional array of controllable phase-modulating elements, selectively reflecting light from different locations of said SLM and passing said reflected light to said focussing element and then to said grating.

Preferably the method comprises delineating groups of individual phase-modulating elements to receive beams of light of differing wavelength;

selecting, from stored control data, control data for each group of phase-modulating elements;

generating from the respective selected control data a respective hologram at each group of phase-modulating elements; and

varying the delineation of the groups and /or the selection of control data.

According to a still further aspect of the invention there is provided an optical add/drop multiplexer having a reflective SLM having a two-dimensional array of controllable phase-modulating elements, a diffraction device and a focussing device wherein light beams from a common point on the diffraction device are mutually parallel when incident upon the SLM, and wherein the SLM displays respective holograms at locations of incidence of light to provide emergent beams whose direction deviates from the direction of specular reflection.

In a yet further aspect, the invention provides a test or monitoring device comprising an SLM having a two-dimensional array of pixels, and operable to cause incident light to emerge in a direction deviating from the specular direction, the device having light sensors at predetermined locations arranged to provide signals indicative of said emerging light.

The test or monitoring device may further comprise further sensors arranged to provide signals indicative of light emerging in the specular directions.

Yet a further aspect of the invention relates to a power control device for one or more beams of lights in which the said beams are incident on respective groups of pixels of a two-dimensional SLM, and holograms are applied to the respective group so that the emergent beams have power reduced by comparison to the respective incident beams.

The invention further relates to an optical routing module having at least one input and at least two outputs and operable to select between the outputs, the module comprising a two dimensional SLM having an array of pixels, with circuitry constructed and arranged to display holograms on the pixels to route beams of different frequency to respective outputs.

According to a later aspect of the invention there is provided an optoelectronic device comprising an integrated multiple phase spatial light modulator (SLM) having a plurality of pixels, wherein each pixel can phase modulate light by a phase shift having an upper and a lower limit, and wherein each pixel has an input and is responsive to a value at said input to provide a phase modulation determined by said value, and a controller for the SLM, wherein the controller has a control input receiving data indicative of a desired phase modulation characteristic across an array of said pixels for achieving a desired control of light incident on said array, the controller has

outputs to each pixel, each output being capable of assuming only a discrete number of possible values, and the controller comprises a processor constructed and arranged to derive, from said desired phase modulation characteristic, a non-monotonic phase modulation not extending outside said upper and lower limits, and a switch constructed and arranged to select between the possible values to provide a respective one value at each output whereby the SLM provides said non-monotonic phase modulation.

Some or all of the circuitry may be on-chip leading to built-in intelligence. This leads to more compact and ultimately low-cost devices. In some embodiments, some or all on-chip circuitry may operate in parallel for each pixel which may provide huge time advantages; in any event the avoidance of the need to transfer data off chip and thereafter to read in to a computer allows configuration and reconfiguration to be faster.

According to another aspect of the invention there is provided a method of controlling a light beam using a spatial light modulator (SLM) having an array of pixels, the method comprising:

determining a desired phase modulation characteristic across a sub-array of said pixels for achieving the desired control of said beam;

controlling said pixels to provide a phase modulation derived from the desired phase modulation, wherein the controlling step comprises

providing a population of available phase modulation levels for each pixel, said population comprising a discrete number of said phase modulation levels;

on the basis of the desired phase modulation, a level selecting step of selecting for each pixel a respective one of said phase modulation levels; and

causing each said pixel to provide the respective one of said phase modulation levels.

The SLM may be a multiple phase liquid crystal over silicon spatial light modulator having plural pixels, of a type having an integrated wave plate and a reflective element, such that successive passes of a beam through the liquid crystal subject each orthogonally polarised component to a substantially similar electrically-set phase change.

If a non-integrated wave plate is used instead, a beam after reflection and passage through the external wave plate will not pass through the same zone of the SLM, unless it is following the input path, in which case the zero order component of said beam will re-enter the input fibre.

The use of the wave plate and the successive pass architecture allows the SLM to be substantially polarisation independent.

In one embodiment the desired phase modulation at least includes a linear component.

Linear phase modulation, or an approximation to linear phase modulation may be used to route a beam of light, i.e. to select a new direction of propagation for the beam. In many routing applications, two SLMs are used in series, and the displayed information on the one has the inverse effect to the information displayed on the other. Since the information represents phase change data, it may be regarded as a hologram. Hence an output SLM may display a hologram that is the inverse of that displayed on the input SLM. Routing may also be "one-to-many" (i.e. multicasting) or "one-to-all" (i.e. broadcasting) rather than the more usual one-to-one in many routing devices. This may be achieved by correct selection of the relevant holograms.

Preferably the linear modulation is resolved modulo 2pi to provide a periodic ramp.

In another embodiment the desired phase modulation includes a non-linear component.

Preferably the method further comprises selecting, from said array of pixels, a sub-array of pixels for incidence by said light beam.

The size of a selected sub-array may vary from switch to switch according to the physical size of the switch and of the pixels. However, a typical routing device may have pixel arrays of between 100 x 100 and 200 x 200, and other devices such as add/drop multiplexers may have arrays of between 10 x 10 and 50 x 50. Square arrays are not essential.

In one embodiment the level-selecting step comprises determining the desired level of phase modulation at a predetermined point on each pixel and choosing for each pixel, the available level which corresponds most closely to the desired level.

In another embodiment, the level-selecting step comprises determining a subset of the available levels, which provides the best fit to the desired characteristic.

The subset may comprise a subset of possible levels for each pixel.

Alternatively the subset may comprise a set of level distributions, each having a particular level for each pixel.

In one embodiment, the causing step includes providing a respective voltage to an electrode of each pixel, wherein said electrode extends across substantially the whole of the pixel.

Preferably again the level selecting step comprises selecting the level by a modulo 2pi comparison with the desired phase modulation. The actual phase excursion may be from A to A+2pi where A is an arbitrary angle.

Preferably the step of determining the desired phase modulation comprises calculating a direction change of a beam of light.

Conveniently, after the step of calculating a direction change, the step of determining the desired phase modulation further comprises correcting the phase modulation obtained from the calculating step to obtain an improved result.

Advantageously, the correction step is retroactive.

In another embodiment the step of determining the desired phase modulation is retroactive, whereby parameters of the phase modulation are varied in response to a sensed error to reduce the error.

A first class of embodiments relates to the simulation/synthesis of generally corrective elements. In some members of the first class, the method of the invention is performed to provide a device, referred to hereinafter as an accommodation element for altering the focus of the light beam.

An example of an accommodation element is a lens. An accommodation element may also be an anti-astigmatic device, for instance comprising the superposition of two cylindrical lenses at arbitrary orientations.

In other members of the first class, the method of the invention is performed to provide an aberration correction device for correcting greater than quadratic aberrations.

The sub-array selecting step may assign a sub-array of pixels to a beam based on the predicted path of the beam as it approaches the SLM just prior to incidence.

Advantageously, after the sub-array is assigned using the predicted path, it is determined whether the assignment is correct, and if not a different sub-array is assigned.

The assignment may need to be varied in the event of temperature, ageing or other physical changes. The sub-array selection is limited in resolution only by the pixel size. By contrast other array devices such as MEMS have fixed physical edges to their beam steering elements.

An element of this type may be used in a routing device to compensate for aberrations, phase distortions and component misalignment in the system. By providing sensing devices a controller may be used to retroactively control the element and the element may maintain an optimum performance of the system.

In one embodiment of this first class, the method includes both causing the SLM to route a beam and causing the SLM to emulate a corrective element to correct for errors, whereby the SLM receives a discrete approximation of the combination of both a linear phase modulation applied to it to route the beam and a non-linear phase modulation for said corrections.

Synthesising a lens using an SLM can be used to change the position of the beam focused spot and therefore correct for a position error or manufacturing tolerance in one or more other lenses or reflective (as opposed to transmissive) optical elements such as a curved mirror.

The method of the invention may be used to correct for aberrations such as field curvature in which the output 'plane' of the image(s) from an optical system is curved, rather than flat.

In another embodiment of the first class, intelligence may be integrated with sensors that detect the temperature changes and apply data from a look-up table to apply corrections.

In yet another embodiment of this class, misalignment and focus errors are detected by measuring the power coupled into strategically placed sensing devices, such as photodiode arrays, monitor fibres or a wavefront sensor. Compensating holograms are formed as a result of the discrete approximations of the non-linear modulation. Changes or adjustments may then be made to these holograms, for example by applying a stimulus and then correcting the holograms according to the sensed response until the system alignment is measured to be optimised.

In embodiments where the method provides routing functions by approximated linear modulation, adaptation of non-linear modulation due to changes in the path taken through the system desirably takes place on a timescale equivalent to that required to change the hologram routing, i.e. of the order of milliseconds.

A control algorithm may use one or more of several types of compensation.

In one embodiment a look-up table is used with pre-calculated 'expected' values of the compensation taking account of the different routes through the system.

In another embodiment the system is trained before first being operated, by repeated changes of, or adjustments to, the compensating holograms to learn how the system is misaligned.

A further embodiment employs intelligence attached to the monitor fibres for monitoring and calculation of how these compensating holograms should adapt with time to accommodate changes in the system alignment. This is achieved in some embodiments by integrating circuitry components into the silicon backplane of the SLM.

In many optical systems there is a need to control and adapt the power or shape of an optical beam as well as its direction or route through the optical system. In communications applications, power control is required for network management reasons. In general, optical systems require the levelling out or compensation for path and wavelength-dependent losses inside the optical system. It is usually desirable that power control should not introduce or accentuate other performance impairments.

Thus in a second class of embodiments, the modulation applied is modified for controlling the attenuation of an optical channel subjected to the SLM.

In one particular embodiment, the ideal value of phase modulation is calculated for every pixel, and then

multiplied by a coefficient having a value between 0 and 1, selected according to the desired attenuation and the result is compared to the closest available phase level to provide the value applied to the pixels.

In another embodiment, the method further comprises selecting by a discrete approximation to a linear phase modulation, a routing hologram for display by the SLM whereby the beams may be correctly routed; selecting by a discrete approximation to a non-linear phase modulation, a further hologram for separating each beam into main and subsidiary beams, wherein the main beam is routed through the system and the or each subsidiary beam is diffracted out of the system; combining the routing and further holograms together to provide a resultant hologram; and causing the SLM to provide the resultant hologram.

The non-linear phase modulation may be oscillatory.

In yet another embodiment, the method further comprises selecting by a discrete approximation to a linear phase modulation, a routing hologram for display by the SLM whereby the beams may be correctly routed; selecting by a discrete approximation to a non-linear phase modulation, a further hologram for separating each beam into main and subsidiary beams, wherein the main beam is routed through the system and at least one subsidiary beam is incident on an output at an angle such that its contribution is insignificant; combining the routing and further holograms together to provide resultant hologram; and causing the SLM to display the resultant hologram.

The non-linear phase modulation may be oscillatory.

In a closely allied class of embodiments, light may be selectively routed to a sensor device for monitoring the light in the system. The technique used may be a power control technique in which light diverted from the beam transmitted through the system to reduce its magnitude is made incident on the sensor device.

In another class of embodiments, a non-linear phase modulation profile is selected to provide beam shaping, for example so as to reduce cross-talk effects due to width clipping. This may use a pseudo amplitude modulation technique.

In a further class of embodiments, the method uses a non-linear modulation profile chosen to provide wavelength dependent effects.

The light may be at a telecommunications wavelength, for example 850 nm, 1300 nm or in the range 1530 nm to 1620 nm.

Brief description of the drawings

Exemplary embodiments of the invention will now be described with reference to the accompanying drawings in which:

Figure 1 shows a cross-sectional view through an exemplary SLM suitable for use in the invention;

Figure 2 shows a sketch of a routing device in which a routing SLM is used additionally to provide correction for performance impairment due to misalignment;

Figure 3 shows a sketch of a routing device in which a routing SLM is used to route light beams and an additional SLM provides correction for performance impairment due to misalignment;

Figure 4 shows a block diagram of an adaptive corrective SLM;

Figure 5 shows an adaptive optical system using three SLMs;

Figure 6 shows a partial block diagram of a routing device with a dual function SLM and control arrangements;

Figure 7 shows a block diagram of an SLM for controlling the power transferred in an optical system;

Figure 8a shows a diagram of phase change distribution applied by a hologram for minimum attenuation;

Figure 8b shows a diagram of phase change distribution applied by a hologram enabling attenuation of the signal;

Figure 9 shows a power control system;

Figure 10 shows a phasor diagram showing the effect of non-linear oscillatory phase modulation applied to adjacent pixels;

Figure 11 shows a schematic diagram of a part of an optical routing system illustrating the effects of clipping and cross talk;

Figure 12 shows a partial block diagram of a system enabling beams of different wavelength from a composite input beam to be separately controlled before recombination; and

Figure 13 shows a schematic diagram of an add/drop multiplexer using an SLM.

Figure 14 is a diagram similar to Figure 12 but showing a magnification stage for increasing the effective beam deflection angle;

Figure 15 shows a vector diagram of the operation of an add/drop multiplexer;

Figure 16 shows a block diagram showing how loop back may be effected;

Figure 17 is a vector diagram illustrating the operation of part of Figure 16;

Figure 18 is a vector diagram of a multi-input/multi output architecture;

Figure 19 is a graph showing the relative transmission Tlo for in-band wavelengths as a function of the ratio of the wavelength offset u to centre of the wavelength channel separation;

Figure 20 is a graph showing the relative transmission Thi inside adjacent channels;

Figure 21 shows a logical diagram of the sorting function;

Figure 22 shows a block diagram of an add/drop node using two routing modules;

Figure 23 shows a block diagram of modules used to cross-connect two rings;

Figure 24 shows a block diagram of routing modules connected to provide expansion;

Figure 25 shows a block diagram of an optical cross-connect;

Figure 26 shows a block diagram of an upgrades node having a cascaded module at an expansion output port;

Figure 27 is a graph showing the effect of finite hologram size of the field of a beam incident on a hologram;

Figure 28 shows a schematic layout of a wavelength filter device; and,

Figure 29 shows a schematic layout of an add/drop device;

Figure 30 shows a block diagram of an optical test set;

Figure 31 is a diagram showing the effect of finite hologram size on a beam at a wavelength different to the centre wavelength associated with the hologram;

Figure 32 shows the truncated beam shapes for wavelengths at various wavelength differences from the centre of the wavelength channel dropped in isolation;

Figure 33 shows the overlap integrands of the beams of Figure 32 with the fundamental mode of the fibre;

Figure 34 shows beam output positions for different wavelengths with respect to two optical fibres; and

Figure 35 shows the overlap integrand between the beams of Figure 34 and the fundamental mode of one of the optical fibres.

Description of the preferred embodiments

Many of the embodiments of the invention centre upon the realisation that the problems of the prior art can be solved by using a reflective SLM having a two-dimensional array of phase-modulating elements that is large in number, and applying a number of light beams to groups of those phase-modulating elements. A significant feature of these embodiments is the fact that the size, shape and position of those groups need not be fixed and can, if need be, be varied. The groups may display holograms which can be set up as required to deflect the light so as to provide a non-specular reflection at a controllable angle to the specular reflection direction. The holograms may additionally or alternatively provide shaping of the beam.

The SLM may thus simulate a set of highly flexible mirrors, one for each beam of light. The size, shape and position of each mirror can be changed, as can the deflection and the simulated degree of curvature.

Devices embodying the invention act on light beams incident on the device to provide emerging light beams which are controlled independently of one another. Possible types of control include control of direction, control of power, focussing, aberration compensation, sampling and beam shaping.

The structure and arrangement of polarisation-independent multiple phase liquid crystal over silicon spatial light modulators (SLMs) for routing light beams using holograms are discussed in our co-pending patent application PCT/GB00/03796. Such devices have an insertion loss penalty due to the dead-space between the pixels. As discussed in our co-pending patent application GB0107742.9, the insertion loss may be reduced significantly by using a reflecting layer inside the substrate positioned so as to reflect the light passing between the pixels back out again.

Referring to Figure 1, an integrated SLM 200 for modulating light 201 of a selected wavelength, e.g. 1.5 μm, consists of a pixel electrode array 230 formed of reflective aluminium. The pixel electrode array 230, as will later be described acts as a mirror, and disposed on it is a quarter-wave plate 221. A liquid crystal layer 222 is disposed on the quarter-wave plate 221 via an alignment

layer (not shown) as is known to those skilled in the art of liquid crystal structures. Over (as shown) the liquid crystal layer 222 are disposed in order a second alignment layer 223, a common ITO electrode layer 224 and an upper glass layer 225. The common electrode layer 224 defines an electrode plane. The pixel electrode array 230 is disposed parallel to the common electrode plane 224. It will be understood that alignment layers and other intermediate layers will be provided as usual. They are omitted in Figure 1 for clarity.

The liquid crystal layer 222 has its material aligned such that under the action of a varying voltage between a pixel electrode 230 and the common electrode 224, the uniaxial axis changes its tilt direction in a plane normal to the electrode plane 224.

The quarter wave plate 221 is disposed such that light polarised in the plane of tilt of the director is reflected back by the mirror 230 through the SLM with its plane of polarisation perpendicular to the plane of tilt, and vice-versa.

Circuitry, not shown, connects to the pixel electrodes 230 so that different selected voltages are applied between respective pixel electrodes 230 and the common electrode layer 224.

Considering an arbitrary light beam 201 passing through a given pixel, to which a determined potential difference is applied, thus resulting in a selected phase modulation due to the liquid crystal layer over the pixel

electrode 230. Consider first and second orthogonal polarisation components, of arbitrary amplitudes, having directions in the plane of tilt of the director and perpendicular to this plane, respectively. These directions bisect the angles between the fast and slow axes of the quarter-wave plate 221.

The first component experiences the selected phase change on the inward pass of the beam towards the aluminium layer 230, which acts as a mirror. The second component experiences a fixed, non-voltage dependent phase change.

However, the quarter-wave plate 221 in the path causes polarisation rotation of the first and second components by 90 degrees so that the second polarisation component of the light beam is presented to the liquid crystal for being subjected to the selected phase change on the outward pass of the beam away from the mirror layer 230. The first polarisation component experiences the fixed, non-voltage dependent phase change on the outward pass of the beam. Thus, both of the components experience the same overall phase change contribution after one complete pass through the device, the total contribution being the sum of the fixed, non-voltage dependent phase and the selected voltage dependent phase change.

It is not intended that any particular SLM structure is essential to the invention, the above being only exemplary and illustrative. The invention may be applied to other devices, provided they are capable of multiphase operation and are at least somewhat polarisation independent at the wavelengths of concern. Other SLMs are

to be found in our co-pending applications WO01/25840, EP1050775 and EP1053501 as well as elsewhere in the art.

Where liquid crystal materials other than ferroelectric are used, current practice indicates that the use of an integral quarter wave plate contributes to the usability of multiphase, polarisation-independent SLMs.

A particularly advantageous SLM uses a liquid crystal layer configured as a pi cell.

Referring to Figure 2, an integrated SLM 10 has processing circuitry 11 having a first control input 12 for routing first and second beams 1,2 from input fibres 3,4 to output fibres 5,6 in a routing device 15. The processing circuitry 11 includes a store holding control data which is processed to generate holograms which are applied to the SLM 10 for control of light incident upon the SLM 10. The control data are selected in dependence upon the data at the control input 12, and may be stored in a number of ways, including compressed formats. The processing circuitry 11, which may be at least in part on-chip, is also shown as having an additional input 16 for modifying the holograms. This input 16 may be a physical input, or may be a "soft" input -for example data in a particular time slot.

The first beam 1 is incident on, and processed by a first array, or block 13 of pixels, and the second beam 2 is incident on and processed by a second array, or block 14 of pixels. The two blocks of pixels 13,14 are shown as contiguous. In some embodiments they might however be

separated from one another by pixels that allow for misalignment.

Where the SLM is used for routing the beams 1,2 of light, this is achieved by displaying a linearly changing phase ramp in at least one direction across the blocks or arrays 13,14. The processing circuitry 11 determines the parameters of the ramp depending on the required angle of deflection of the beam 1,2. Typically the processing circuitry 11 stores data in a look-up table, or has access to a store of such data, to enable the required ramp to be created in response to the input data or command at the first control input 12. The angle of deflection is probably a two dimensional angle where the plane common to the direction of the incident light and that of the reflected light is not orthogonal to the SLM.

Assigning x and y co-ordinates to the elements of the SLM, the required amount of angular shift from the specular reflection direction may be resolved into the x and y directions. Then, the required phase ramp for the components is calculated using standard diffraction theory, as a "desired phase characteristic".

This process is typically carried out in a training stage, to provide the stored data in the look-up table.

Having established a desired phase modulation characteristic across the array so as to achieve the desired control of said beam the processing circuitry 11 transforms this characteristic into one that can be displayed by the pixels 13,14 of the SLM 10. Firstly it

should be borne in mind that the processing circuitry 11 controlling the pixels of an SLM 10 is normally digital. Thus there is only a discrete population of values of phase modulation for each pixel, depending on the number of bits used to represent those states.

To allow the pixels 13,14 of the SLM 11 to display a suitable phase profile, the processing circuitry 11 carries out a level selecting operation for each pixel. As will be appreciated, the ability of the SLM to phase modulate has limits due to the liquid crystal material, and hence a phase ramp that extends beyond these limits is not possible. To allow for the physical device to provide the effects of the ideal device (having a continuously variable limitless phase modulation ability), the desired phase ramp may be transformed into a non-monotonic variation having maxima and minima within the capability limits of the SLM 10. In one example of this operation, the desired phase modulation is expressed modulo 2pi across the array extent, and the value of the desired modulo-2pi modulation is established at the centre of each pixel. Then for each pixel, the available level nearest the desired modulation is ascertained and used to provide the actual pixel voltage. This voltage is applied to the pixel electrode for the pixel of concern.

For small pixels there may be edge effects due to fringing fields between the pixels and the correlations between the director directions in adjacent pixels. In such systems the available phase level nearest to the value of the desired modulo-2pi modulation at the centre of each pixel (as described above) should be used as a first

approximation. A recursive algorithm is used to calculate the relevant system performance characteristic taking into account these 'edge' effects and to change the applied level in order to improve the system performance to the required level.

"Linear" means that the value of phase across an array of pixels varies linearly with distance from an arbitrary origin, and includes limited linear changes, where upon reaching a maximum phase change at the end of a linear portion, the phase change reverts to a minimum value before again rising linearly.

The additional input 16 causes the processing circuitry 11 to modify the holograms displayed by applying a discrete approximation of a non-linear phase modulation so that the SLM 10 synthesises a corrective optical element such as a lens or an aberration corrector. As will be later described, embodiments may also provide power control (attenuation), sampling and beam shaping by use of the non-linear phase modulation profile. "Non-linear" is intended to signify that the desired phase profile across an array of pixels varies with distance from an arbitrary origin in a curved and/or oscillatory or like manner that is not a linear function of distance. It is not intended that "non-linear" refer to sawtooth or like profiles formed by a succession of linear segments of the same slope mutually separated by "flyback" segments.

The hologram pattern associated with any general non-linear phase modulation $\exp j\phi(u) = \exp j(\phi_0(u) + \phi_1(u) + \phi_3(u) \ldots.)$ where j is the complex operator, can be considered

as a product. In this product, the first hologram term in the product exp j $\phi_0(u)$ implements the routing while the second hologram term exp j $\phi_1(u)$ implements a corrective function providing for example lens simulation and/or aberration correction. The third hologram term exp j $\phi_2(u)$ implements a signal processing function such as sampling and/or attenuation and/or beam shaping. The routing function is implemented as a linear phase modulation while the corrective function includes non-linear terms and the signal processing function includes non-linear oscillatory terms.

Different methods of implementing the combination of these three terms are possible. In one embodiment the total required phase modulation $\phi_0(u) + \phi_1(u) + \phi_2(u)$ including linear routing and corrective function and the signal processing function is resolved modulo 2 pi and approximated to the nearest available phase level before application by the pixels. In another embodiment the summation of the phase modulation required for the linear and corrective function $\phi_0(u) + \phi_1(u)$ is resolved modulo 2 pi and approximated to the nearest phase level in order to calculate a first phase distribution. A second phase distribution $\phi_2(u)$ is calculated to provide sampling and/or attenuation and/or beam shaping. The two phase distributions are then added, re-resolved modulo 2 pi and approximated to the nearest available phase level before application by the pixels. Other methods are also possible.

Mathematically the routing phase modulation is periodic due to the resolution modulo 2pi and by nature of its linearity.

Therefore the routing phase modulation results in a set of equally spaced diffraction orders. The greater the number of available phase levels the closer the actual phase modulation to the ideal value and the stronger the selected diffraction order used for routing.

By contrast, the corrective effects are realised by non-linear phase changes $\phi_1(u)$ that are therefore non-periodic when resolved modulo 2pi. This non-periodic phase modulation changes the distribution of the reflected beam about its centre, but not its direction. The combined effect of both linear (routing) and non-periodic phase modulation is to change both the direction and distribution of the beam, as may be shown using the convolution theorem.

The signal processing effects are usually realised by a method equivalent to 'multiplying' the initial routing and/or corrective hologram $\exp j(\phi_0(u)+\phi_1(u))$ by a further hologram $\exp j\ \phi_2(u)$ in which $\phi_2(u)$ is non-linear and oscillatory. Therefore the set of diffraction orders associated with the further hologram creates a richer structure of subsidiary beams about the original routed beam, as may be shown using the convolution theorem.

While this explanation is for a one-dimensional phase modulator array the same principle may be applied in 2-D.

Hence in a reconfigurable optical system this non-linear phase modulation may be applied by the same spatial light modulator(s) that route the beam. It will be understood by those skilled in the art that the SLM may have only a single control input and the device may have processing circuitry for combining control data for routing and control data for corrective effects and signal processing effects to provide an output to control the SLM.

The data may be entered into the SLM bit-wise per pixel so that for each pixel a binary representation of the desired state is applied. Alternatively, the data may be entered in the form of coefficients of a polynomial selected to represent the phase modulation distribution of the pixel array of concern in the SLM. This requires calculating ability of circuitry of the SLM, but reduces the data transfer rates into the SLM. In an intermediate design the polynomial coefficients are received by a control board that itself sends bit-wise per pixel data to the SLM. On-chip circuitry may interpret data being entered so as to decompress that data.

The pixel array of concern could be all of the pixels associated with a particular beam or a subset of these pixels. The phase modulation distribution could be a combined phase modulation distribution for both routing and corrective effects or separate phase modulation distributions for each. Beam shaping, sampling and attenuation phase modulation distributions, as will be described later, can also be included. In some cases it may not be possible to represent the phase modulation distribution as a simple polynomial. This difficulty may

be overcome by finding a simple polynomial giving a first approximation to the desired phase modulation distribution. The coefficients of this polynomial are sent to the SLM. A bit-wise correction is sent for each pixel requiring a correction, together with an address identifying the location of the pixel. When the applied distribution is periodic only the corrections for one period need be sent.

The processing circuitry 11 may be discrete from or integral with the SLM, or partly discrete and partly integral.

Referring to Figure 3, a routing device 25 includes two SLMs 20,21 which display holograms for routing light 1,2 from an input fibre array 3,4 to an output fibre array 5,6. The two SLMs are reflective and define a zigzag path. The first SLM 20 hereinafter referred to as a "corrective SLM" not only carries out routing but also synthesises a corrective optical element. The second SLM 21 carries out only a routing function in this embodiment, although it could also carry out corrections or apply other effects if required. The second SLM 21 is hereinafter referred to as a "routing SLM". Although the corrective SLM 20 is shown disposed upstream of the routing SLM 21, it may alternatively be disposed downstream of the routing SLM 21, between two routing SLMs, or with systems using routing devices other than the routing SLM 21.

The routing SLM 21 has operating circuitry 23 receiving routing control data at a routing control input 24, and generating at the SLM 21 sets of holograms for routing the beams 1,2. The corrective SLM 20 has operating

circuitry 26 receiving compensation or adaptation data at a control input 27 to cause the SLM 20 to display selected holograms. In this embodiment, the SLM 20 forms a reflective lens.

Synthesising a lens at the SLM 20 can be used to change the position of the beam focused spot and therefore correct for a position error or manufacturing tolerance in one or more other lenses or reflective (as opposed to transmissive) optical elements, such as a curved mirror. The synthesised lens can be spherical or aspheric or cylindrical or a superposition of such lenses. Synthesised cylindrical lenses may have arbitrary orientation between their two long axes and the lens focal lengths can both be positive, or both be negative, or one can be positive and the other negative.

To provide a desired phase modulation profile for a lens or curved mirror to compensate for an unwanted deviation from a required system characteristic, the system is modelled without the lens/mirror. Then a lens/mirror having the correction to cancel out the deviation is simulated, and the parameters of the lens/mirror are transformed so that when applied to an SLM the same effect is achieved.

In one application what is required is to adjust the position and width of the beam waist, of a Gaussian-type beam at some particular point in the optical system, in order to compensate for temperature changes or changes in routing configuration. Hence two properties of the beam must be adjusted and so it is necessary to change two properties of the optical system. In a conventional static

optical system both a lens focal length and the position of the lens are selected to achieve the required beam transformation. In the dynamic systems under consideration it is rarely possible deliberately to adjust the position of the optical components. A single variable focus action at a fixed position changes both the position and the width of the beam waist and only in special circumstances will both properties be adjusted to the required value.

One method to overcome this problem is to apply both corrective phase and corrective 'pseudo-amplitude' modulation (to be described later) with a single SLM. However the amplitude modulation reduces the beam power which may be undesirable in some applications. A further and preferred method is to apply corrective phase modulation with two separate SLMs.

For example consider coupling from one input fibre (or input beam) through a routing system into the selected output fibre (or output beam). Inside the routing system there are at least two SLMs carrying out a corrective function. They may also be routing and carrying out other functions (to be described in this application). In between a given pair of SLMs carrying out focus correction there is an intermediate optical system.

At the first SLM carrying out a corrective function there may be calculated and/or measured the incident amplitude and phase distribution of the input beam that had propagated from the input fibre or beam. At the second SLM carrying out a corrective function there may be calculated and/or measured the ideal amplitude and phase distribution

that the output beam would adopt if coupling perfectly into the output fibre or beam. This can be achieved by backlaunching from the output fibre or beam or by a simulation of a backlaunch. The required focus correction functions of these two SLMs is to transform the incident amplitude and phase distribution arriving at the first SLM to the ideal amplitude and phase distribution at the second SLM to achieve perfect (or the desired) coupling efficiency into the output fibre or output beam.

The corrective phase modulation to be applied at the first SLM should be calculated, so as to achieve the ideal amplitude distribution at the second SLM as the beam arrives at the second SLM after passing from the first SLM and through the intermediate system. This calculation should take into account propagation through the intermediate system between the first and second SLMs. Hence the function of the first SLM is to correct the beam so as to achieve the ideal amplitude distribution for the output beam. The beam phase distribution should also be calculated as it arrives at the second SLM. The corrective phase distribution to be applied at the second SLM should be calculated so as to transform the phase distribution of the beam incident upon it from the intermediate system to the ideal phase distribution required for the output beam at the second SLM.

Two variables available at the SLM to effect corrections from an optimal or other desired level of performance are firstly the blocks of pixels that are delineated for the incident light beam, and secondly the hologram that is displayed on the block(s) of concern.

Starting with the delineation of blocks, it should be borne in mind that the point of arrival of light on the SLM can only be predicted to a certain accuracy and that the point may vary according to physical changes in the system, for example due to temperature effects or ageing. Thus, the device allows for assessment of the results achieved by the current assignment, and comparison of those results with a specified performance. In response to the comparison results, the delineation may be varied so as to improve the results.

In one embodiment a training phase, uses for example a hill climbing approach to control and optimise the position of the centre of the block. Then if the "in-use" results deviate by more than a specified amount from the best value, the delineation of the block is varied. This process reassignment may step the assigned block one pixel at a time in different directions to establish whether an improved result is achieved, and if so continuing to step to endeavour to reach an optimum performance. The variation may be needed where temperature effects cause positional drift between components of the device. It is important to realise that unlike MEMS systems and the like, all the pixels are potentially available for all the beams. Also the size, shape and location of a delineated block is not fixed.

Equally the size and shape of a block may be varied if required. Such changes may be necessary under a variety of situations, especially where a hologram change is needed. If for example a hologram requiring a larger number of

pixels becomes necessary for one beam, the size of the block to display that hologram can be altered. Such changes must of course usually be a compromise due to the presence of other blocks (possibly contiguous with the present block) for displaying holograms for other beams of light.

Monitoring techniques for determining whether the currently assigned block is appropriate include the techniques described later herein as "taking moments".

Turning to variation of the hologram that is displayed on the block of concern, one option to take into account for example physical changes in the system, such as movement out of alignment, is to change one normal linear-type routing hologram for another, or to adjust the present hologram in direct response to the sensed change. Thus if, due for example to temperature effects, a target location for a beam moves, it may be necessary to change the deflection currently being produced at a pixel block. This change or adjustment may be made in response to sensed information at the target location, and may again be carried out "on-line" by varying the hologram step by step. However, it may be possible to obtain an actual measure of the amount and direction of change needed, and in this case either a new hologram can be read in to the SLM or a suitable variation of the existing hologram carried out.

As well as, or instead of, linear changes to linear routing holograms, corrective changes may be needed, for example to refocus a beam or to correct for phase distortion and non-focus aberrations.

Having corrected the beam focus other aberrations may remain in the system. Such aberrations distort the phase distributions of the beams. These aberrations will also change with routing configuration as the beams are passing through different lenses and/or different positions on the same lenses. Similarly the aberrations will change with temperature. To obtain stable and acceptable performance of a reconfigurable optical system, the aberrations can be corrected dynamically.

To provide a desired phase modulation profile for these aberrations the system may be modelled or measured to calculate the phase distortion across the SLM, compared to the ideal phase distribution. The ideal phase distribution may again be found by modelling the system 'backwards' from the desired output beam, or by backlaunching and measurement, while the actual phase distribution may be found by modelling the system forwards from the input beam or measurement. The calculations will include the effects of reflection from the SLM itself. The corrective function of the SLM is to transform between the actual and ideal phase distortion. The phase distortion is defined as the phase difference between the actual phase distribution and the ideal phase distribution. The desired corrective profile is the conjugate phase of the phase distortion.

Alternatively, these corrective functions can be shared by two SLMs, which allows an extra degree of freedom in how the beam propagates inside the intermediate system between the two SLMs.

Further, given a real system a sampling method (as will be described later) may be used to direct a fraction of the beam towards a wavefront sensor that may assess the beam. So far the process is deterministic. Then the changes are applied to the real system, and perturbations on the parameters are applied while monitoring the sensor and/or the input/output state, so as to determine whether an optimum configuration is achieved. If not, the parameters are changed until a best case is achieved. Any known optimising technique may be used. It is preferred to provide a reasonable starting point by deterministic means, as otherwise local non-optimum performance maxima may be used instead of the true optimum.

The method or device of the invention may be used to correct for aberrations such as field curvature in which the output 'plane' of the image(s) from an optical system is curved, rather than flat.

Equally, even if in use the SLM forms a corrective element by having non-linear phase modulation applied across it, if it is operated in separate training and use phases, it may be desirable while training for the SLM to route as well. In this case the SLM scans the processed beam over a detector or routes the beam, for example using one or more dummy holograms, into a monitor fibre.

Referring now to Figure 4, the corrective SLM 20, used purely for synthesising a corrective element, has operating circuitry 125, and further comprises processing circuitry 122 and temperature sensors 123. In this embodiment the operating circuitry, temperature sensors and processing

circuitry are integrated on the same structure as the rest of the SLM, but this is not critical to the invention. Associated with the processing circuitry is a store 124 into which is programmed a lookup table. The sensors detect temperature changes in the system as a whole and in the SLM, and in response to changes access the look up table via the processing circuitry 122 to apply corrections to the operating circuitry. These corrections affect the holograms displayed on the blocks 13, 14 of pixels. The sensors may also be capable of correction for temperature gradients.

This technique may also be applied to an SLM used for routing.

Referring now to Figure 5, an optical system 35 has a corrective SLM 30 with operating circuitry 31, and processing circuitry 32. The system includes further devices, here second and third SLMs 33 and 34, disposed downstream of the corrective SLM 30. The second SLM 33 is intended to route light to particular pixel groups 15, 16 of the third SLM 34. The third SLM 34 has monitor sensors 37 for sensing light at predetermined locations. In one embodiment these sensors 37 are formed by making the reflective layer partially transmissive, and creating a sensing structure underneath. In another, the pixel electrode of selected pixels is replaced by a silicon photodetector or germanium sensor structure.

In either case, circuitry may be integrated into the silicon backplane to process the output of the sensors 37, for example to compare the outputs of adjacent sensors 37,

or to threshold one sensor against neighbouring sensor outputs. Where possible, processing circuitry is on chip, as it is possible to reduce the time taken after light has been received to respond to it in this way. This is because there is no need to read information off-chip for processing, and also because calculations may be able to be performed in parallel.

Provided the routing-together with any compensation effects from the corrective SLM 30 - is true, the sensors 37 will receive only a minimal amount of light. However where misalignment or focus errors are present, the extent of such errors is detected by measuring the power coupled into the monitor sensors. To that end, the sensors 37 provide data, possibly after some on-chip processing, to the processing circuitry 32. The processing circuitry 32 contains a control algorithm to enable it to control the operating circuitry 31 to make changes of, or adjustments to, the compensating holograms displayed on the corrective SLM 30 until the system alignment is measured to be optimised. In some embodiments, changes to the sub-arrays to which beam affecting holograms are applied may be made in response to the sensor output data.

In another embodiment a determined number of dummy ports are provided. For example for a connector two or more such ports are provided and for routing devices three or more dummy ports are provided. These are used for continuous misalignment monitoring and compensation, and also for system training at the start.

Although some embodiments can operate on a trial and error basis, or can be adapted "on the fly", a preferred optical system uses a training stage during which it causes to be stored in the look-up table data enabling operation under each of the conditions to be encountered in use.

In one embodiment, in the training stage, a set of initial starting values is read in for application to the SLM 30 as hologram data, then light is applied at a fibre and the result of varying the hologram is noted. The variations may include both a change of pixels to which the hologram is applied, and a change of the hologram. Where more than one fibre is provided, light is applied to each other fibre in turn, and similar results obtained. Then other environmental changes are applied and their effects noted, e.g. at the sensors 37, and the correction for input data either calculated or sought by varying the presently-applied data using optimisation techniques to seek best or acceptable performance.

Then, in use, the system may be operated on a deterministic basis - i.e. after ascertaining what effect is sought, for example responding to a temperature change or providing a change in routing, the change to the applied data for operating the device can be accessed without the need for experiment.

A preferred embodiment operates in the deterministic way, but uses one or more reference beams of light passed through the device using the SLM 30. In that way the effect of deviations due to the device itself can be isolated. Also it can be confirmed that changes are being

correctly made to take into account environmental and other variations.

The device may also have further monitor sensors placed to receive the zero-order reflections from the SLM(s) to enable an assessment to be made of the input conditions. For example, where an input channel fails, this can be determined by observing the content of the specular reflection from the light beam representing that channel. Where there are two SLMs as in some routing systems, the specular reflections from each SLM may be sensed and compared.

Referring now to Figure 6, a dual-function SLM 40 provides both routing and correction. The SLM 40 has operating circuitry 41 and processing circuitry 42. The operating circuitry 41 receives routing data at a first control input 44 for causing the processing circuitry 42 to generate the holograms on the SLM 40 to achieve the desired routing. The processing circuitry 42 also receives routing data on an input 45, and controls the operating circuitry 41 using an algorithm enabling adaptation due to changes in the path taken through the system to take place on a timescale equivalent to that required to change the hologram display, i.e. of the order of milliseconds.

The control algorithms for this embodiment may use one or more of several types of compensation.

In one embodiment a look-up table is stored in a memory 43, the look-up table storing pre-calculated and

stored values of the compensation for each different route through the system.

In another embodiment the system is trained before first being operated, using changes of, or to the compensating holograms to learn how changing the compensating holograms affects the system performance, the resulting data being held in the memory 43.

In a further embodiment, the processing circuitry 42 employs intelligence responsive to signals from monitor sensors 47,48 for monitoring and calculation of how these compensating holograms should adapt with time to accommodate changes in the system alignment. This is achieved in some embodiments by integrating circuitry components into the silicon backplane of the SLM, or by discrete components such as germanium detectors where the wavelengths are beyond those attainable by silicon devices. In some embodiments sensors 47 are provided for sensing light at areas of the SLM, and in others the sensors 48 may instead or also be remote from the SLM 40 to sense the effects of changes on the holograms at the SLM 40.

Referring now to Figure 7, an optical system 80 includes an SLM 81 for routing beams 1,2 of light from input fibres 3,4 to output fibres 5,6 by means of holograms displayed on pixel groups 13,14 of the SLM. The holograms are generated by processing circuitry 82 which responds to a control input 83 to apply voltages to an array of pixellated elements of the SLM, each of which is applied substantially uniformly across the pixel of concern. This

result is a discrete approximation of a linear phase modulation to route the beams.

The processing circuitry 82 calculates the ideal linear phase ramp to route the beams, on the basis of the routing control input 83 and resolves this phase modulo 2Pi. The processing circuitry at each of the pixels then selects the closest available phase level to the ideal value. For example if it is desired to route into the m'th diffraction order with a grating period Ω the ideal phase at position u on the SLM 81 is 2pi.mu/Ω. Therefore, approximately, the phase goes linearly from zero up to 2pi over a distance Ω/m after which it falls back to zero, see Figure 8a.

Control of the power in individual wavelength channels is a common requirement in communication systems. Typical situations are the need to avoid receiver saturation, to maintain stable performance of the optical amplifiers or to suppress non-linear effects in the transmission systems that might otherwise change the information content of the signals. Power control may be combined with sampling or monitoring channels to allow adjustment of the power levels to a common power level (channel equalisation) or to some desired wavelength characteristic.

Deliberate changes to the value of Ω can be used to reduce the coupling efficiency into the output in order to provide a desired attenuation. This is suitable for applying a low attenuation. However, it is not suitable for a high attenuation as, in that event, the beam may then be deflected towards another output fibre, increasing the

crosstalk. If there is only one output fibre this method may be used regardless of the level of attenuation.

To provide a selected desired attenuation of the optical channel in the system, processing circuitry 85 responds to an attenuation control input 84 to modify the operation of the operating circuitry 83 whereby the operating circuitry selects a linear phase modulation such that by the end of each periodic phase ramp the phase has reached less than 2pi, see Figure 8b.

This may be achieved by calculating the ideal value of phase for every pixel, and then multiplying this ideal value by a coefficient r between 0 and 1, determined on the basis of the desired attenuation. The coefficient is applied to every pixel of the array in order to get a reduced level per pixel, and then the available phase level nearest to the reduced level is selected.

The method of this embodiment reduces the power in this diffraction order by making the linear phase modulation incomplete, such that by the end of each periodic phase ramp the phase has only reached 2pi.r. It has however been found that the method of this embodiment may not provide sufficient resolution of attenuation. It also increases the strength of the unwanted diffraction orders likely to cause crosstalk. When combined with deliberate changes in the length of the ideal phase ramp the resolution of attenuation may be improved. Again if there is only a single output fibre the crosstalk is less important.

Resolution may also be improved by having a more complex incomplete linear phase modulation. However, the unwanted diffraction orders may still remain too strong for use in a wavelength-routed network. Hence to control the power by adapting the routing hologram may have undesirable performance implications in many applications, as crosstalk worsens with increase of attenuation. The problem can be overcome by use of a complex iterative design. This could be used to suppress the higher orders but makes the routing control more expensive.

Referring now to Figure 9, a system 99 includes an SLM 90 controlled by applying a discrete approximation of a linear phase modulation to route beams 1,2 from input fibres 3,4 to output fibres 5,6 as previously described with respect to Figure 7. Thus operating circuitry 91 selects a routing hologram for display by the SLM, in accordance with a routing input 92, whereby the beams may be correctly routed, using a look up table or as otherwise known. A memory holds sets of data each allowing the creation of a respective power controlling hologram. Processing circuitry 93 runs an algorithm which chooses a desired power controlling hologram corresponding to a value set at a power control input 94. The power controlling hologram is selected to separate each beam into respective main 1a, 2a and subsidiary 1b, 2b beams, such that the main beams 1a, 2a are routed through the system and the or each subsidiary beam(s) 1b, 2b is/ are diffracted out of the system, for example to a non-reflective absorber 97.

The processing circuitry 93 applies the power controlling hologram data to a second input 95 of the

operating circuitry 91 which acts on the routing hologram data so as to combine the routing and power controlling holograms together to provide a resultant hologram. The operating circuitry then selects voltages to apply to the SLM 90 so that the SLM displays the resultant hologram.

Thus power in a routing context is controlled by combining the routing hologram with another hologram that has the effect of separating the beam into a main beam and a set of one or more subsidiary beams. Of these the main beam is allowed to propagate through the system as required while the other(s) are diffracted out of the system.

For example consider a hologram that applies phases of $+\phi$ and $-\phi$ on adjacent pixels. In terms of real and imaginary parts this hologram has the same real part, cos ϕ, on every pixel, see Figure 10, while the imaginary part oscillates between $\pm$ sin ϕ. It can be shown using Fourier theory that the net effect is to multiply the amplitude of the original routed beam by a factor cos ϕ, and to divert the unwanted power into a set of weak beams at angles that are integer multiples of $\pm\lambda/2p$ with respect to the original routed beam, where λ is the operating wavelength and p is the pixel pitch.

The system is designed from a spatial viewpoint such that light propagating at such angles falls outside the region of the output fibres 5,6 of Figure 9. An alternative design directs the unwanted light into output fibres 5,6 at such a large angle of incidence that the coupling into the fundamental mode is very weak, and has no substantial effect. In this case the unwanted power is

coupling into the higher-order modes of the fibre and so will be attenuated rapidly. A fibre spool or some other technique providing mode stripping is then used on the output fibre before the first splice to any other fibre.

In either case, the effective attenuation of the beam is 10 $\log_{10} \cos^2\phi$. Hence, in this way, polarisation-independent phase modulation may be used to create an effect equivalent to polarisation-independent amplitude modulation. This is termed herein "pseudo amplitude modulation". In this particular case the pseudo-amplitude modulation applied at every pixel is $\cos \phi$.

It will be clear to those skilled in the art that use of alternate pixels as the period of alternation is not essential, and may in some cases be undesirable. This is because of edge effects in the pixels.

The period and pattern of alternation can be varied so as to adjust the deflection angle of the 'unwanted power'. This light directed away from the output fibres can be collected and used as a monitor signal. Hence the pseudo-amplitude modulation can be used to sample the beam incident on an SLM as previously discussed. This sampling hologram can be combined with a routing and/or power control and/or corrective SLM. In the latter case the sampled beam can be directed towards a wavefront sensor and then used to assess the quality of the beam correction. While the pseudo-amplitude modulation as described above is applied to the whole beam, it could be applied selectively to one or more parts of the beam.

A further modification to this pseudo-amplitude modulation is to multiply it by a further phase modulating hologram such as to achieve a net effect equivalent to a complex modulation.

It is often important that the sampling hologram takes a true sample of the output beam. Therefore in some cases the sampling hologram should be applied after the combination of all other desired effects including resolution modulo 2 pi and approximation to the nearest available phase level. In this case the overall actual phase modulation distribution is achieved by a method equivalent to forming the product of the sampling hologram and the overall hologram calculated before sampling.

Similar pseudo-amplitude modulation techniques may be extended to suppress the crosstalk created by clipping of the beam tails at the edges of each hologram and to tailor the coupling efficiency vs. transverse offset characteristic of the output fibres. Since the transverse position at the output fibre is wavelength dependent, this tailoring of the coupling efficiency vs. offset can be used to tailor the wavelength response of the system. This is important in the context of wavelength division multiplexing (WDM) systems where the system wavelength can be expected to lie anywhere in the range of the available optical amplifiers. The output angle for beam steering using an SLM and periodic linear phase modulation is proportional to the wavelength while the focal length of corrective lenses is also wavelength-dependent. Therefore a hologram configured to give the optimum coupling efficiency at one wavelength will produce an output beam with transverse and/or longitudinal offset at another

wavelength. These effects result in wavelength-dependent losses in systems required to route many wavelength channels as an ensemble. Hence a method designed to flatten or compensate for such wavelength-dependent losses is useful and important.

Among the envisaged applications are the flattening of the overall wavelength response and the compensation for gain ripple in optical amplifiers, especially Erbium-doped fibre optic amplifiers (EDFA).

An SLM device may also be used to adapt the shape, e.g. the mode field shape, of a beam in order to suppress crosstalk.

Beam shaping is a type of apodisation. It is advantageously used to reduce crosstalk created at a device by clipping of the energy tails of the light beams. Such clipping leads to ripples in the far field. These ripples cause the beam to spread over a wider region than is desired. In telecommunications routing this can lead to crosstalk. Other applications may also benefit from apodisation of a clipped laser beam, such as laser machining, for example, where it is desired to process a particular area of a material without other areas being affected and laser scalpels for use in surgery.

Clipping occurs because the energy of the beam spreads over an infinite extent (although the amplitude of the beam tails tends to zero), while any device upon which the beam is incident has a finite width. Clipping manifests itself

as a discontinuity in the beam amplitude at the edges of the device

Referring to Figure 11, two SLMs 100,101 are used for beam steering or routing of beams 1,2 from input fibres 3,4 to output fibres 5,6, as described in PCT GB00/03796. Each SLM 100,101 is divided into a number of blocks of pixels 103a, 104a; 103b, 104b. Each block 103a, 104a is associated with a particular input fibre 3,4 -i.e. the fibre of concern points to the subject block. Each block displays a hologram that applies routing. As previously discussed herein the holograms may also or alternatively provide focus compensation, aberration correction and/or power control and/or sampling, as required.

The blocks 103a, 104a at the input SLM 100 each receive a beam from an associated input fibre 3,4 while the blocks 103b, 104b at the output SLM 101 each direct a beam towards an associated output fibre 5,6. Each block 103a, 103b has a finite width and height. As known to those skilled in the art and as previously noted, the beam width is infinite, therefore the block clips the beam from or to the associated fibre and this creates undesired ripples in the far field.

The ripples due to clipping of the beam 1 are figuratively shown as including a beam 106 which, it will be seen, is incident on the wrong output hologram, displayed on block 104b at the output SLM 101. "Wrong" signifies holograms other than that to which the beam of concern is being routed, for example holograms displayed by blocks around the block to which the beam should be routed.

Some of these ripples will then be coupled into "wrong" output fibres 5,6 -i.e. those to which the beam is not deliberately being routed- leading to crosstalk. It will be clear to those skilled in the art that these effects will be present on blocks other than those adjacent to the "correct" blocks, as the field of beam 1 is infinite in extent.

In any physical system the effect of the ripples created by clipping at the output SLM 101 depends on the optical architecture.

In practice the non-ideal transfer function of the optics (due to finite lens apertures and aberrations) means that a sharp change in the amplitude spreads out and causes crosstalk in adjacent output fibres. In effect the optics applies a limit to the range of spatial frequencies that can be transmitted. This frequency limit causes crosstalk.

The wider the device, compared to the beam spot size at the device, the weaker the ripples in the far field and the lower the crosstalk. In general a parameter C is defined such that the required width of SLM per beam is given by $H=C.\omega$, where ω is the beam spot size at the SLM. The value of C depends on the beam shape, the optical architecture and the allowable crosstalk. Typically for a Gaussian beam, with no beam shaping and aiming for crosstalk levels around -40 dB, C would be selected to have a value greater than or equal to three. Looking at this system from the spatial frequency viewpoint, the field incident on the SLM contains (for perfect optics) all the spatial frequencies in the input beam. The finite device

width cuts off the higher spatial frequencies, so, again, the optics applies a limit to the range of spatial frequencies that can be transmitted and this frequency limit causes crosstalk.

Beam shaping can be used to decrease the crosstalk for a given value of C, and also allow the use of a lower value of C. Calculations for NxN switches have shown that decreasing the value of C leads to more compact optical switches and increases the wavelength range per port. Hence beam shaping can be employed to provide more compact optical switches and/or an increased wavelength range per port.

The idea behind using beam shaping or 'apodisation' to reduce crosstalk is based on an analogy with digital transmission systems. In these systems a sequence of pulses is transmitted through a channel possessing a limited bandwidth. The frequency response of the channel distorts the edges of pulses being transmitted so that the edges may interfere with one another at the digital receiver leading to crosstalk. The channel frequency response can, however, be shaped so as to minimise such crosstalk effects. Filters with responses that have odd-symmetry can be used to make the edges go through a zero at the time instants when pulses are detected.

Therefore beam-shaping with odd symmetry can be used to make the crosstalk go through a zero at the positions of the output fibres. Such a method is likely to be very sensitive to position tolerances.

Another method used in digital systems is to shape the frequency cut-off so that it goes smoothly to zero. In the present context the ideal case of 'smoothly' is that the channel frequency response and all derivatives of the frequency response become zero. In practice it is not possible to make all derivatives go to zero but a system may be designed in which the amplitude and all derivatives up to and including the k'th derivative become zero at the ends of the frequency range. The higher the value of k, the quicker the tails of the pulse decay. Therefore the beam shaping should go as smoothly as possible to zero.

To investigate the effects of beam shaping the amplitude modulation was treated as continuous. The system studied was a single lens 2f system where 2f is the length of the system between fibres and SLM, assuming f is the focal length with fibres in one focal plane, and an SLM in the other focal plane. The input fibre beam was treated as a Gaussian. Various amplitude modulation shapes were applied at the SLM and the coupling efficiency into the output fibre was calculated. In this architecture and from Abbe theory, the incident field at the SLM is proportional to the Fourier Transform of the field leaving the input fibre. In particular, different spatial frequencies in the fibre mode land on different parts of the SLM. Clipping removes the spatial frequencies outside the area of the hologram. Beam shaping at the SLM has the effect of modifying the relative amplitude of the remaining spatial frequencies.

Residual ripples may still remain due to the discontinuity in the beam derivative but the ripples will

be reduced in amplitude and decay more quickly. Further reduction in the ripple amplitude and increase in the rate of decay may be achieved by shaping the beam such that both the amplitude and the first k derivatives go to zero at the edges.

Mathematical analysis of the effect has also been carried out. The results are as follows:

The nth time derivative of a function can be expressed in terms of its Fourier Transform as shown in equation (1):

$$\frac{d^n g(t)}{dt^n} = \int_{-\infty}^{\infty} (i2\pi f)^n G(f) \exp i2\pi f t \, df \qquad (1)$$

Hence, by inversion, the frequency dependence of the Fourier Transform (FT) may be expressed as an FT of any one of the function's derivatives as shown in equation (2):

$$G(f) = \frac{1}{(i2\pi f)^n} \int_{-\infty}^{\infty} \frac{d^n g(t)}{dt^n} \exp -i2\pi f t \, dt \qquad (2)$$

Choosing the zeroth derivative provides the expression in equation (3):

$$G(f) = \int_{-\infty}^{\infty} g(t) \exp -i2\pi f t \, dt \qquad (3)$$

To apply the analysis to free-space beam-steering:-

let x and y be the position co-ordinates at the fibre output from a switch, and u and v be the position co-ordinates at the SLM. Assume the SLM to be in one focal plane of a lens of focal length f, and the fibre array to be in the other focal plane:

$$E_{FIB}(x,y) = \frac{i}{f\lambda} \exp(-i\frac{2\pi}{\lambda}(2f + nt)) \iint E_{SLM}(u,v) \exp i\frac{2\pi f}{\lambda}(xu + yv) du\,dv \qquad (4)$$

such that the output field (see equation (4)) is a 2-D Fourier Transform of the field at the SLM, E_{SLM}. In this

result t is the lens thickness and N its refractive index, while λ is the optical wavelength.

For the present purposes the 1-D equivalent is considered (relation 5):

$$E_{FIB}(x) = \frac{i}{f\lambda}\exp(-i\frac{2\pi}{\lambda}(2f+nt))\int E_{SLM}(u)\exp i\frac{2\pi f}{\lambda}(xu)du \qquad (5)$$

Comparing with (3) it is clear that the position co-ordinate at the SLM (u) is equivalent to the time domain and the position co-ordinate at the output (x) is equivalent to the frequency domain. Hence from (2) the output field may be expressed in terms of a derivative of the field at the SLM, as shown in equation (6):

$$E_{FIB}(x) = \frac{i}{f\lambda}\exp(-i\frac{2\pi}{\lambda}(2f+nt))\left(\frac{i}{2\pi x}\right)^n\int\frac{d^nE_{SLM}(u)}{du^n}\exp i\frac{2\pi f}{\lambda}(xu)du \qquad (6)$$

Let the kth derivative of $E_{SLM}(u)$ be non-zero and smoothly varying over the range [-H/2, H/2], but zero outside this range, such that the derivative changes discontinuously at u = ±H/2, as defined in (7):

$$\begin{aligned}\frac{d^kE_{SLM}(u)}{du^k} &= 0 && \forall u: u < -\tfrac{H}{2}\\ &= g^H && u = -\tfrac{H}{2}\\ &= s(u) + g^H && -\tfrac{H}{2} < u < \tfrac{H}{2}\\ &= g^H && u = +\tfrac{H}{2}\\ &= 0 && u > \tfrac{H}{2}\end{aligned} \qquad (7)$$

This representation assumes E_{SLM} to be even in u. Physically this situation represents a beam that is perfectly aligned with respect to the centre of a hologram of width H.

This derivative may be expressed as the sum of a rect function and a smoothly varying function, s(u), that is zero at and outside |u|=H/2, as shown in equation (8):

$$\frac{d^k E_{SLM}(u)}{du^k} \equiv g_H rect\left(\frac{u}{H}\right) + s(u) \qquad (8)$$

For example consider a clipped (and unapodised) Gaussian beam; the zeroth derivative (k=0) may be expressed as shown in equations (9) and (10):

$$s(u) = \exp-\left(\frac{u}{\omega_{HOL}}\right)^2 - \exp-\left(\frac{H}{2\omega_{HOL}}\right)^2 \quad \forall |u| < \frac{H}{2} \qquad (9)$$

$$= 0 \quad \forall |u| \geq \frac{H}{2}$$

$$g_H = \exp-\left(\frac{H}{2\omega_{HOL}}\right)^2 \qquad (10)$$

Now returning to the general case (equation(8)) the k+1th derivative is calculated to be as shown in equation (11):

$$\frac{d^{k+1} E_{SLM}(u)}{du^{k+1}} \equiv g_H \left\{\delta\left(u+\frac{H}{2}\right) - \delta\left(u-\frac{H}{2}\right)\right\} + \frac{ds(u)}{du} \qquad (11)$$

It is now convenient to calculate the output field. Set $n=k+1$ in (6) to obtain equation (12):

$$E_{FIB}(x) \propto \frac{1}{(j2\pi x)^{k+1}} \left\{ \begin{array}{l} g_H \int_{-\infty}^{\infty} (\delta(u+H/2) - \delta(u-H/2)) \exp- j2\pi x u \, du \\ + \int_{-\infty}^{\infty} \frac{ds(u)}{du} \exp- j2\pi x u \, du \end{array} \right\} \qquad (12)$$

which becomes equation (13):

$$E_{FIB}(x) \propto \frac{1}{(j2\pi x)^{k+1}} \left\{ 2j g_H \sin(\pi x H) + \int_{-\frac{H}{2}}^{\frac{H}{2}} \frac{ds(u)}{du} \exp- j2\pi x u \, du \right\} \qquad (13)$$

As the position is increased, the exponential term in the 2nd integral of (13) oscillates more and more rapidly. Eventually the spatial frequency is so high that the derivative of s(u) can be considered to be constant, or nearly constant, over the spatial period. In which case the integral is zero, or nearly zero, when evaluated over each period of the oscillation. Therefore at high frequencies the whole of the second integral must approach zero.

It is assumed that the behaviour is dominated by the first integral. The first integral shows that if the amplitude changes discontinuously ($k=0$, i.e. an unapodised hologram), the spectrum (E_{FIB}) decays as 1/x. Now, if the amplitude and the first derivative are continuous, it is the second derivative that changes discontinuously, and so $k=2$ and the spectrum (E_{FIB}) decays as $1/x^3$. Numerical simulations have been carried out to confirm this behaviour.

A particularly advantageous shape is one in which the shaped beam has odd symmetry about points midway between the centre and the edges such that the beam amplitude and all of its derivatives go to zero at the beam edges.

The beam shaping may be effected to remove only a small amount of power from the central portion of the beam, to maintain acceptable system efficiency. A method for shaping a beam to achieve suppression of the ripples is now described.

Defining the middle of the beam as $f(u)$, then $f(u)$ can describe the original beam in its central portion, or what is left in the original beam after it has already been partially shaped, using, for example, pseudo-amplitude. To avoid ripples in the far field the edges of the beam go to zero at u = ±H/2, where H is the width of the hologram.

Hence, at the right-hand edge, describe the beam as in equation (14):

$$f_R(u) = f(0) - f(u-H/2) \qquad (14)$$

(The left-hand edge is considered later).

To get matching of the amplitude half-way between the middle and the edge it is required that condition (15) should be valid:

$$f(H/4) = f_R(H/4) \qquad (15)$$

From which there is obtained equation (16):

$$f(H/4) + f(-H/4) = f(0) \qquad (16)$$

Now consider the derivatives at the joining point. The nth derivative of the right-hand edge function is given by equation (17):

$$\left.\frac{d^n f_{RH}}{du^n}\right|_{u=U} = \left.\frac{d^n f}{du^n}\right|_{u=U-H/2} \qquad (17)$$

Hence at the joining point condition (18) is valid:

$$\left.\frac{d^n f_{RHEDGE}}{du^n}\right|_{u=H/4} = \left.\frac{d^n f}{du^n}\right|_{u=-H/4} \qquad (18)$$

In order to avoid the creation of high frequency effects (crosstalk tails) by the joining point all derivatives are desirably continuous here. Hence it is required that condition (19) should be true:

$$\left.\frac{d^n f}{du^n}\right|_{u=H/4} = \left.\frac{d^n f}{du^n}\right|_{u=-H/4} \qquad (19)$$

To find out whether this is possible, expand the function f in a Taylor series about x=0 to obtain equation (20):

$$f = f(0) + a_1 u + a_2 u^2 + a_3 u^3 + a_4 u^4 + a_5 u^5 + a_6 u^6 + \ldots\ldots\ldots \qquad (20)$$

The first derivative is given by equation (21):

$$\frac{df}{du} = a_1 + 2a_2 u + 3a_3 u^2 + 4a_4 u^3 + \ldots\ldots \qquad (21)$$

The required condition (19) for the first derivative (n=1) can be obtained provided f is even in x, so that all the odd coefficients $\{a_1, a_3..\}$ in (20) and (21) are zero. This makes the first derivative continuous at the joining point. Furthermore if f is an even function then $f(H/4)=f(-H/4)$ in which case (16) becomes (22):

$$f(H/4) = \tfrac{1}{2} f(0) \qquad (22)$$

Given that f is now an even function, the second derivative of f is given by equation (23):

$$\frac{d^2 f}{du^2} = 2a_2 + 12a_4 u^2 + \ldots\ldots \qquad (23)$$

Returning to the required condition in (19) it is clear that it cannot be satisfied for n=2. Hence the

second derivative is discontinuous at the joining point $u=H/4$.

The left-hand edge is given by equation (24)

$$f_{LH}(u) = f(0) - f(u+H/2) \quad (24)$$

Given that f is even, the overall function has odd symmetry in each half plane about x = ± H/4.

To work out what happens at u= ±H/2, expand f_{RH} and f_{LH} in Taylor series, as shown in equations 25 and 26:

$$f_{RH} = a_2\left(u-\tfrac{H}{2}\right)^2 + a_4\left(u-\tfrac{H}{2}\right)^4 + a_6\left(u-\tfrac{H}{2}\right)^6 + \ldots\ldots\ldots \quad (25)$$

$$f_{LH} = a_2\left(u+\tfrac{H}{2}\right)^2 + a_4\left(u+\tfrac{H}{2}\right)^4 + a_6\left(u+\tfrac{H}{2}\right)^6 + \ldots\ldots\ldots \quad (26)$$

The function and its first derivative are both zero at u= ½H, but the second derivative has the value $2a_2$. Outside of the range [-½H, ½H] the beam drops to zero. Hence the second derivative is discontinuous at both u=±½H and u=±H/4, and the far field must therefore decay as the cube of the distance measured in the far field.

From the analysis, the required properties of $f(u)$ for a hologram of width H are that firstly it should be even in u, and that secondly its amplitude at the position $u=H/4$ should be half the amplitude at $u=0$. After apodisation has been applied the shape of the beam in the region between $u=H/4$ and $u=H/2$ should be given by $f_{RH}(u) = f(0) - f(u-H/2)$ while in the region between $u=-H/2$ and $u=-H/4$ the shape of the beam should be given by $f_{LH}(u) = f(0) - f(u+H/2)$. In practice the shaping may not increase the local beam

amplitude. Hence the hologram width and/or the shape of the central portion may have to be adjusted to avoid the requirement for 'amplifying' shaping.

As an example these conditions are satisfied by a Gaussian distribution given by equation 27:

$$f(u) = \exp -\left(\frac{u\sqrt{\ln(2)}}{H/4}\right)^2 \qquad (27)$$

If the original beam satisfies the first two conditions it can be apodised without removing power from the central region. Otherwise shaping can be applied to the central region so that these two conditions are satisfied.

In some systems there may be a requirement to adapt the width of the beam in the far field: either to narrow the beam or to broaden the beam. This may be useful for laser processing of materials as well as for routing. It is advantageous that the method to change the width does not introduce side lobes. A particular application that would benefit is laser drilling of holes. The SLM could be used to narrow the drilling beam as well as to change its focus so that the drilled hole remains of uniform diameter (or has reduced diameter variation) as the hole is progressively bored.

In order to broaden the far field, the near field (at the SLM) needs to be made narrower. This may be implemented by applying shaping to the central portion of the beam so that its full width half maximum (FWHM) points become closer together and so that the beam shape has even symmetry about its centre. Preferably the amplitude at the

very peak is not reduced so as not to lose too much power. The distance between the two FWHM points defines the effective half-width of the hologram. Further shaping should be applied to the left-hand and right-hand edges of this effective hologram, so that the beam shape has the required properties as described previously. Outside of the width of the effective hologram the beam shape should have zero amplitude.

To narrow the far field, the near field (at the SLM) needs to be made broader. This may be implemented by applying shaping to the central portion of the beam, so that the FWHM points become further apart, and so that the beam shape has even symmetry about its centre. Typically this will require reduction of the amplitude around its peak. The extent of this reduction is governed by the need to be able to apply shaping to the right and left hand edges of the hologram with the constraint that the shaping may only decrease the amplitude (and not increase it).

Amplitude-modulating SLMs can be used to implement the shaping but they are polarisation-dependent.

Another pseudo-amplitude modulation can be created to implement the beam shaping by using a phase-modulating SLM, which may be made polarisation-independent. This may be achieved by recognising that a phase modulation exp j $\phi(u)$, where j is the complex operator, is equivalent to a phase modulation cos $\phi(u)$ + j sin $\phi(u)$. Now choose $\phi(u)$ such that the modulus of $\phi(u)$ is varying slowly but the sign is oscillating.

Hence the real part of the modulation, cos $\phi(u)$, will be slowly varying and can act as the amplitude modulator to create the beam shape, while the imaginary part of the modulation, $\pm \sin \phi(u)$, will be oscillating rapidly with an equivalent period of two or more pixels. Hence the energy stripped off by the effective amplitude modulator will be diffracted into a set of beams that are beam-steered out of the system at large angles.

In a preferred embodiment, the system is designed such that light travelling at such angles will either not reach the output plane or will land outside the region defined by the output ports. Therefore the beam component shaped by sin $\phi(u)$ is rejected by the optical system, while the beam component shaped by cos $\phi(u)$ is accepted by the system and couples into one or more output ports, as required. While this explanation is for a one-dimensional phase modulator array the same principle is applicable in 2-D. If $\phi(u)$ varies from 0 at the centre of the beam to $\pi/2$ at the edges then the amplitude of the beam shaped by cos $\phi(u)$ varies from 1 at the centre of the beam to 0 at the edges, thus removing the amplitude discontinuity that creates rippling tails in the far field. This can be achieved with minimal change to the insertion loss of the beam as it passes through the system. Indeed, often the insertion loss due to clipping is due to interference from the amplitude discontinuity, rather than the loss of energy from the beam tails.

The beam-shaping hologram is non-periodic but oscillatory and may be applied as a combination with other

routing and/or lens synthesis and/or aberration correcting and/or power control and/or sampling holograms.

Further advantages of the beam shaping are that it reduces the required value of C for a given required crosstalk, allowing more compact optical switches. Another advantage is that the crosstalk decays much more rapidly with distance away from the target output fibre. Hence, essentially, the output fibres receive crosstalk only from their nearest neighbour fibres.

Therefore in a large optical switch used as a shared NxN switch for a range of wavelengths, it should be possible to arrange the wavelength channel allocation such that no output fibre collects crosstalk from a channel at the same system wavelength as the channel it is supposed to be collecting. This would reduce significantly the homodyne beat noise accumulation in networks using such switches, and, conversely, allow an increase in the allowed crosstalk in each switch as heterodyne crosstalk has much less of an impact at the receiver, and can also be filtered out if necessary.

The crosstalk suppression method uses beam shaping to suppress ripples in the beam tails. The same method can be adapted to change the beam shape around the beam centre. For the case when the output beam is an image of the beam at the SLM the beam shaping is working directly on an image of the output beam. The fraction of the initial beam that is shaped by the slowly varying function cos $\phi(u)$ can have the correct symmetry to couple efficiently into the fundamental mode of the output fibre. The fraction of the

initial beam that is shaped by the rapidly varying function $\pm \sin \phi(u)$ has the wrong symmetry to couple into the fundamental mode and can be adjusted to be at least partially orthogonal to the fundamental mode.

Effectively, it is the fraction of the beam shaped by $\cos \phi(u)$ that dominates the coupling efficiency into the fundamental mode. Therefore the dependence of the coupling efficiency vs. transverse offset is dominated by the overlap integral between the $\cos \phi(u)$ shaped beam and the fibre fundamental mode.

When the incident beam is the same shape as the fundamental mode and for small transverse offsets the coupling efficiency decreases approximately parabolically with transverse offset. In many beam-steering systems using phase-modulating SLMs the transverse offset at the output fibre increases linearly with the wavelength difference from the design wavelength. Consequently the system coupling efficiency decreases approximately parabolically with wavelength difference from the design wavelength. Beam shaping can be used to adjust the shape of the incident beam and optimised to flatten the dependence on transverse offset and hence to flatten the wavelength response. Alternatively a more complex wavelength dependence could be synthesised to compensate for other wavelength-dependent effects.

Beam shaping may also be used during system assembly, training or operation in order to measure mathematical moments of a light beam. A description of the method and

theory will be followed by a description of some example applications.

The method requires a first stage during which corrective phase modulation is applied by the SLM such that the phase profile of the beam leaving the SLM has no non-linear component. This may be confirmed with a collimeter or wavefront sensor or some other suitable device. In a first embodiment the phase profile has no linear component applied to deflect the beam such that the beam is reflected in a specular direction. An optical receiver is placed to receive the reflected beam. The power reflected exactly into the specular direction is proportional to the square of an integral A(n) given in equation (28) where f(n,u,v) is the complex amplitude of the beam leaving the SLM at co-ordinates u,v during the nth stage of the method.

$$A(n) = \iint f(n,u,v)\,du\,dv \qquad (28)$$

The optical power received by the photodiode during the nth stage of the method is given by equation (29).

$$P(n) = K(A(n))^2 \qquad (29)$$

where K is a constant of proportionality.

If received by an optical fibre the received power will be modified according to the fibre misalignment and mode field distribution, leading to possible ambiguities in the method. Hence it is preferred instead to receive the beam by a photodiode. During the first stage of the method the net phase modulation applied by the SLM is such that the beam is of uniform phase. Let b(u,v) be the beam amplitude distribution. Therefore during this first stage

the integral A is equal to the zeroth moment, a0, of the beam amplitude distribution, as shown in equation (30), and f(n,u,v) is equal to b(u,v).

$$A(1) = a0 = \iint b(u,v)\,du\,dv \qquad (30)$$

Therefore the power, P(1), measured by the photodiode during this first stage is given by equation (31).

$$P(1) = Ka_0^{\,2} \qquad (31)$$

In order to characterise a two-dimensional beam, moments of the beam distribution may be taken in two orthogonal directions, in this case the u and v directions. Consider the pixel block of concern to be broken up into a set of columns. To each column in the block a particular effective amplitude modulation may be applied using the pseudo-amplitude method or some other method. For example consider the pixel column with a centre at co-ordinate u*. By applying an alternating phase modulation of $+\phi(u^*)$ and $-\phi(u^*)$ to adjacent pixels in the same column the effective amplitude modulation applied to the particular column is $\cos(\phi(u^*))$.

In order to calculate the first moment in the u direction, during the second stage of the method the values of $\cos(\phi(u^*))$ are chosen such as to approximate to a linear distribution, as described in equation (32).

$$\cos(\phi(u^*)) \approx mu^* + c \qquad (32)$$

Therefore the power P(2) measured during the second stage of the process is given by (33).

$$P(2) \approx K\left(m^2 a_{1U}^{\,2} + 2mca_{1U}a_0 + c^2 a_0^{\,2}\right) \qquad (33)$$

where a1u is the first moment of the beam distribution in the u direction, as given by (34).

$$a1u = \iint ub(u,v)\,du\,dv \qquad (34)$$

The ratio of the powers measured during the two stages is then given by equation (35)

$$\frac{P(2)}{P(0)} \approx m^2\left(\frac{a_{1U}}{a_0}\right)^2 + 2mc\frac{a_{1U}}{a_0} + c^2 \qquad (35)$$

Given the measured power ratio and the values of m and c as chosen to satisfy the constraints of the method, the quadratic equation given in (35) may be solved to calculate the ratio of the first order moment in the u direction to the zeroth order moment.

The constraints on m and c are such that the actual values of the alternating phase of each column need to be chosen from the available set and such that the total phase excursion across the expected area of the beam remains within the range $[0,\pi]$ or $[-\pi,0]$ so that the $\cos(\phi(u^*))$ term may decrease (or increase) monotonically. In practise a photodiode of finite size will receive power diffracted from the SLM within an angular distribution about the specular direction. A further constraint on the gradient 'm' in equation (32) is such that the side lobes created by the linear amplitude modulation fall outside the area of the photodiode.

Similar methods may be used to take approximate higher-order moments in the u direction, and also first and higher-order moments in the v direction. In the latter

case to each row in the block a particular effective amplitude modulation is applied, e.g. by setting adjacent pixels in the row to alternating phases of $+\phi(v^*)$ and $-\phi(v^*)$, where v^* is the position co-ordinate of the row. The second-order moments may also be calculated and used to estimate the beam spot size at the hologram. This estimate can be used as part of the control algorithm for focus adjustment.

In a second embodiment a further linear phase modulation is applied to the hologram during each stage so as to deflect the beam to be measured while taking the moments towards a particular photodiode.

Consider a Gaussian type beam b(u,v) centred at position co-ordinates (u0,v0). The even symmetry of the beam about axes parallel to the u and v directions and through the centre lead to the identities given by equations (36) and (37).

$$\iint (u-u0)b(u,v)\,du\,dv = 0 \qquad (36)$$

$$\iint (v-v0)b(u,v)\,du\,dv = 0 \qquad (37)$$

Hence approximate values of the first order moments measured as described previously, or by some other method, may be used to deduce approximate positions for the beam centres, as shown by equations (38) and (39).

$$u_0 \approx \frac{a_{1U}}{a_0} \qquad (38)$$

$$v_0 \approx \frac{a_{1V}}{a_0} \qquad (39)$$

In the next stage of the measurement the pixel block initially assigned to the beam is re-assigned such that it is centred within half a pixel in each of the u and v directions from the approximate centre of the beam, as just calculated.

Let the new centre of the pixel block be at (u1,v1). A new hologram should be calculated such that the beam leaving the SLM acts as the product of a beam of uniform phase distribution and an effective amplitude distribution given by equation (40).

$$\cos(\phi(u^*)) \approx m(u^* - u1) \qquad (40)$$

The principle is that if the beam centre lies exactly at u1 the measured power exactly in the specular direction will be zero. Taking into account the finite area of the photodiode the measured power cannot be zero but will be minimised when u1 is within half a pixel pitch of the beam centre.

This new hologram should be applied to the pixel block and the power measured. At this point the method can proceed in two ways.

In one embodiment a further estimate of the beam centre can be calculated, as described previously, a new centre position u1 calculated, the hologram recalculated according to equation (40) and the power measured again. This process can be repeated until the value of u1 appears to have converged.

In a second embodiment the centre of the pixel block, u1 can be re-assigned, the hologram recalculated according to (40) and the power measured again. At the current pixel block centre, u1, for which the beam centre is within half a pixel of u1, the measured power should be at a minimum value.

A further embodiment is to use a suitable combination of these two alternative methods.

The centre of the pixel block in the v direction can be measured using similar methods.

The size of the pixel block used should be chosen so as to cover the expected area of the beam. Outside of this area the phase can be modulated on a checkerboard of, for example, ±pi/2, so that the effective amplitude modulation is zero and the light from these regions is diffracted far away from the photodiode.

It can be shown that equations (36) and (37) are also satisfied if the beam waist is not coincident with the SLM, that is the beam is defocused. Although the method as described above will not be calculating the proper moments of the beam, it can be shown that the position of the beam centre may still be identified using the methods described.

The beam shaping method may be extended to control and adapt the amplitude of the beam steered through the system. If $\phi(u)$ varies from ψ at the centre of the beam to $\pi/2$ at the edges then the real part of the pseudo-amplitude modulation can be considered as cos ψ multiplied by an

ideal beam-shaping function that causes insignificant insertion loss. In which case there is an associated additional insertion loss given by approximately $10\log_{10}(\cos^2 \psi)$. By varying the value of ψ the beam power can be varied. Therefore the same device can be used to achieve power control, otherwise known as channel equalisation, as well as changing the routing or direction of a beam. Deliberate changes in the beam shaping function can be used to increase the number of 'grey levels' possible for the beam attenuation, i.e. to provide an increased resolution. As for the beam shaping, the rejected power is diffracted out of the system. Therefore this attenuation method does not increase crosstalk.

Another technique for controlling beam power without increasing crosstalk is to deflect the unwanted energy in a direction orthogonal to the fibres susceptible to crosstalk.

This may be combined with yet another technique, namely distorting the beam phase in such a way that much of the energy couples in to the higher-order modes of the fibre, rather than the fundamental mode that carries the signal. The beam phase distortion may alternatively be used alone.

In an embodiment, these methods are achieved by dividing the area of the SLM on which the beam is incident into a set of 'power controlling' stripes. The long side of the stripes are at least substantially in the plane in which the input and output beam are travelling. By varying the relative phase in the stripes the coupling efficiency

into the fundamental mode of the output fibre is changed, and hence the throughput efficiency of the optical system is set. This method can be applied to a pixellated device that is also routing or otherwise adapting a beam. In this case each 'stripe' would contain between one and many of the pixels already in use.

Alternatively the long side of the power controlling stripes could be in one plane in one electrode, with the long side of the routing pixels in an orthogonal direction in the other electrode, of which either the stripe electrodes, or the pixellated electrodes, or both, are transparent.

Alternatively the device acts solely as a beam power controller, or channel equaliser. In this case each stripe could be a single pixel. The set of stripes for each beam defines a block. Many blocks could be placed side by side to form a row of blocks, with each block in the row providing channel equalisation for a different beam. Many rows could also be provided so as to provide channel equalisation for signals coming in on different input fibres.

If a pair of confocal focusing elements is disposed between the output fibre and SLM then the output fibre receives an image of the field at the SLM. In this case the attenuation at the output fibre is governed by the orthogonality between the image and the fundamental mode of the fibre. Assuming, and without loss of generality, that a perfect image is formed such that sharp phase discontinuities are preserved, it may be shown that the

coupling efficiency into the fundamental mode is proportional to the square of a sum of weighted integrals. The weight is the modulation exp iϕ applied by a stripe, and the associated integral is over the area onto which that stripe is imaged. The integrand is positive and depends on the square of the local electric field associated with the fundamental mode. Each integral is represented as a phasor, with a length depending on how much of the fundamental mode power passes through the region onto which the stripe is imaged, and a phasor angle depending on the phase modulation. The net coupling efficiency is given by the magnitude of the vector summation of the individual phasors associated with each stripe. For simple devices it may be advantageous to use as few stripes as possible as this reduces any losses due to dead space between the stripes and reduces the control complexity. With only two stripes of approximately equal area (and hence two phasors of approximately equal length) the possible vector sums lie on a semicircle and hence the number of possible grey levels is equal to the number of phase levels between 0 and pi, which may not be sufficient. Transverse offset of the output fibre with respect to the centre of the image has the effect of making the two phasors unequal and hence complete extinction is not possible. These problems may be overcome by using three or more stripes per hologram. For example with three stripes the loci of vector sums lie on circles centred about the semicircle taking just two of the stripes into consideration. Hence many more values are possible. Increasing the number of stripes increases the number of grey levels and the depth of attenuation.

A fibre spool is used on the output fibre before any splices are encountered. It will clear to those skilled in the art that other mode stripping devices or techniques could be used instead.

This system can also be adaptive: given knowledge of the applied phase by each stripe and enough measurements of the coupling efficiency, the lengths of the different phasors associated with each stripe can be calculated. Given these lengths the performance can be predicted for any other applied phases. Hence suitable algorithms can be included in the SLM or interface to train and adapt the device performance to cater for transverse offset of the output fibre and other misalignments.

Sharp edges or phase discontinuities in this image will be eroded by the optical modulation transfer function (MTF) but, nevertheless, where a sufficient number of stripes is provided it is possible to vary the phase modulation of each and achieve a wide range of attenuation.

Ultimately what limits the depth of attenuation is the residual zero-order due to, for example, an imperfect quarter-wave plate or Fresnel reflections from different surfaces inside the SLM such that the reflected light has not yet been phase-modulated. An example reflection is from the interface between the cover glass and transparent electrode. Such residual zero orders will couple into the output fibre independently of the phase modulation. In many cases the residual zero order will have a different polarisation state to the beam that has been properly

processed by the phase modulation, so even adapting the phase modulation will not recover the depth of attenuation.

In such cases it is advantageous to apply some routing to the output fibre, such that the zero order is offset from the output fibre and the intended output beam is steered into a diffraction order of the routing hologram. For a many-pixellated SLM this may be achieved using the standard routing algorithm described earlier. For a simple SLM with few pixels, e.g. the one with the stripes in the plane of the input and output fibres, these stripes can be subdivided in an orthogonal direction, that is to create a 2-D array of pixels. This however increases the device complexity.

An alternative simple device is to combine it with a tip-tilt beam-steering element, as described in Optics Letters, Vol. 19, No 15, Aug 1, 1994 "Liquid Crystal Prisms For Tip-Tilt Adaptive Optics" G D Love et al. In this case the top 'common electrode' is divided into a set of top electrodes, one for each device, where each device is assumed to receive a separate beam or set of beams. Each top electrode has different voltages applied on two opposite sides. The shape of the top electrode is such that the voltage between the electrodes varies nonlinearly in such a way as to compensate for the non-linearity of the phase vs. applied volts characteristic of the liquid crystal. Hence with all the stripe electrodes at the same voltage the device provides a linear phase ramp acting like a prism and deflecting the phase-modulated beam in a pre-defined direction, such that the residual zero order falls elsewhere, as required. Changing the stripe electrode

voltage causes phase changes in the imaged beam but does not prevent the deflection. Small adjustments in the phase ramp can be used to compensate for component misalignments and/or curvature of the SLM substrate and/or wavelength difference from the design wavelength for the tip-tilt device. Such small adjustments in the phase ramp can also be used to achieve fine control over the attenuation. Hence such a device would be useful whether or not the required attenuation is sufficiently strong for the residual zero order to become a problem. Alternatively the top electrode can be divided into two or more areas, with the shape of each so as to compensate for the phase vs. volts non-linearity. Varying the voltage on the ends of each electrode can be used to offset the phase modulation of each stripe in order to create the desired attenuation. In this case the aluminium electrode would be common to the device, removing dead-space effects.

In another embodiment of the tip-tilt device, the top electrode is common to all devices and a shaped transparent electrode is provided, e.g. by deposition, on top of the quarter-wave plate, with connections to the SLM circuitry to either side of the device. In this case the aluminium may act only as a mirror and not as an electrode. Again the shaped transparent electrode may be subdivided into two or more areas to provide the attenuation. This embodiment avoids dead-space effects and also a voltage drop across the quarter-wave plate.

In a further embodiment, such a tip-tilt device has a shaped transparent electrode on both cover glass and quarter-wave plate. The planes of tip-tilt for the two

devices may be orthogonal or parallel. With two parallel tip-tilt electrodes the device may act as a power-controlling two-way switch, and also, as will be described later, can be used in a multi-channel add/drop multiplexer. With two orthogonal tip-tilt electrodes the device can beam steer in 2-dimensions such as to correct for positional errors. Either of the two tip-tilt electrodes can be subdivided so as to provide attenuation.

One advantageous SLM is that described in our co-pending patent application EP1053501.

If there is a single focusing element between the output fibre and SLM then the field at the output fibre is the Fourier Transform of the field leaving the SLM. In this case three classes of phase modulation can be used to change the coupling efficiency into the output fibre. The first two classes assume a many-pixellated SLM while the third class assumes a few-pixel SLM with or without tip-tilt features as described earlier. In the third class the tip-tilt feature may be used to compensate for transverse positional errors in the input and output fibre.

The different classes of phase modulation result in a variable coupling efficiency at the output fibres using the following methods:

As noted above, the first class uses a many-pixellated SLM. A periodic phase modulation is applied that creates a set of closely spaced diffraction orders at the output fibre. The spacing is comparable to the fibre mode spot size such that there is significant interference between

the tails of adjacent diffraction orders. The phases of these diffraction orders are chosen such that the resulting superposition is rapidly alternating in phase and therefore couples into the higher-order fibre modes. Varying the strength, phase and position of each diffraction order changes the attenuation. If the long sides of the stripes used to create this alternating output field are in the plane of the input and output fibres, then diffraction orders landing outside the target optical fibre fall along a line orthogonal to the output fibre array, and therefore do not cause crosstalk.

In the second class, again using a many-pixellated SLM, a non-periodic smoothly varying non-linear phase modulation is applied at the SLM, in this case the SLM acts as a diffractive lens such that the beam is defocused and couples into higher-order modes.

In the third class, which uses a simple SLM with few pixels, the pixels are used to apply phase distortion across the beam incident on the SLM. Such phase modulation can be considered to be equivalent to the first class but with a long period. The phase distortion at the SLM results in amplitude and phase distortion in the reflected beam and hence reduces the coupling efficiency into the output fibre.

Again, all three methods require use of a mode stripper on the output fibre. Again suitable algorithms can be included in the SLM or interface to train the system.

Another embodiment, not illustrated, uses a graded-index (GRIN) lens secured to one face of an SLM, and having input and output fibres directed on or attached to the opposite face. The SLM may provide selective attenuation, and/or may selectively route between respective input fibres and selected output fibres. A requirement for stable performance is fundamental for optical devices used in communications and like fields. One of the dominant manufacturing costs for such optical devices is device packaging. The GRIN lens architecture results in a compact packaged device resilient to vibrations. However, the architecture can have problems with spherical aberration and problems in achieving the required alignment accuracy. In particular there is often a requirement for precise transverse positioning of the fibres. Also due to manufacturing tolerances in the GRIN lens the focused spot in the reflected beam can be offset significantly in the longitudinal direction from the end face of the output fibre, resulting in an insertion loss penalty. This problem gets worse the longer the GRIN lens. Applying selected non-linear phase modulation to the SLM may compensate for problems such as focus errors, length errors, longitudinal positional errors and spherical aberration. Applying selected linear phase modulation to the SLM and/or using tip-tilt electrodes may compensate for problems such as transverse positional errors.

Optical systems using SLMs may individually process the channels from an ensemble of channels on different wavelengths, entering the system as a multiplex of signals in a common beam. Given a continuous array of pixels the SLM may also process noise between the channels. Hence the

optical system acts as a multiwavelength optical processor. The processing may include measurement of the characteristics of the signals and accompanying noise as well as routing, filtering and attenuation.

In a first application, the SLMs carry out attenuation, known in this context as channel equalisation. A second application is a channel controller. A third application is an optical monitor. A fourth application is an optical test set. A fifth application is add/drop multiplexing. Further applications are reconfigurable wavelength demultiplexers and finally modular routing nodes. In all of these applications the SLMs may carry out routing and/or power control and/or beam shaping and/or sampling and/or corrective functions as described earlier. The system to be described is not restricted to this set of seven applications but is a general multi-wavelength system architecture for distributing the wavelength spectrum from one or more inputs across an array of devices and recombining the processed spectrum onto one or more selected outputs.

The inputs and outputs may be to and from optical networking equipment such as transmission systems, transmitter line cards and receiver line cards. Alternatively the inputs may be from one or more local optical sources used as part of a test set: either via an intermediate optical fibre or emitting directly into the optical system. The outputs may be to one or more local photo detectors for use in testing and monitoring. Applications outside the field of communications are also possible such as spectroscopy.

Such multi-wavelength architectures can be adaptations of optical architectures used for wavelength de-multiplexing. Wavelength demultiplexers typically have a single input port and many output ports. These can use one or more blazed diffraction gratings: either in free-space or in integrated form such as an AWG (Arrayed Waveguide Grating). These devices are reciprocal and hence work in reverse. Hence if a signal of the appropriate wavelength is injected into the output port it will emerge from the input port. The output port usually consists of an optical waveguide or fibre with an accepting end that receives a focused beam from the optical system and a delivery end providing an external connection. Now consider replacing the acceptance end of the output waveguide/fibre with a reflective SLM: all of the processed signals reflected straight back will couple into the input fibre and emerge from the input port. These signals can be separated from the input signal with a circulator. Alternatively the system is adapted so that the reflected signals emerge and are collected together into a different fibre.

Free-space optical systems performing wavelength de-multiplexing can use diffraction gratings made by ruling, or from a master, or made holographically, or by etching. Usually these work in reflection but some can work in transmission. One or two gratings can be used in the system. The optics used to focus the beams can be based on refractive elements such as lenses or reflective elements such as mirrors or a combination of the two.

Referring to Figure 12, a channel equaliser 350 has a single grating 300 used with a refractive focusing element

310 and an SLM 320. To make the diagram clearer, the grating 300 is drawn as working in transmission. Other embodiments use two gratings and/or reflective focusing elements and/or gratings that work in reflection, such as blazed gratings.

A first input beam 301 from an input port 304 contains an ensemble of channels at different wavelengths entering the equaliser on the same input port 304. As a result of the grating 300 the beam 301 is split into separate beams 301a, 301b, 301c for each wavelength channel, each travelling in a different direction governed by the grating equation. The grating 300 is positioned in the input focal plane of a main routing lens 310 with a reflective SLM 320 at the output focal plane of the routing lens 310. If desired, there may also be a field-flattening lens just in front of the SLM 320.

If lens 310 were an ideal lens, rays passing through the same point on the focal plane of the lens, regardless of direction provided they are incident on the lens, emerge mutually parallel from the lens. As lens 310 is not a real lens, this is no longer strictly true: however well-known lens design techniques can be applied to make it true over the required spatial window.

Hence, the beams 301a, 301b, 301c that were incident upon the lens 310 from the same point on the focal plane, but at different angular orientations, emerge mutually parallel from the routing lens 310, but spatially separate. Thus, the lens refracts each beam to a different transverse position 320a, 320b, 320c on the SLM 320. At each position

the SLM 320 displays a pixellated hologram and/or has a tip-tilt device for processing the relevant wavelength component of the beam. In the preferred embodiment, the SLM 320 is a continuous pixel array of phase-modulating elements and is polarisation independent. The width of each hologram or tip/tilt device compared to the spot size of the incident beam incident is sufficient to avoid clipping effects. Instead, or additionally, beam shaping may be used. The device may be controlled to deflect or attenuate the beam as described earlier, and provides output processed beams 302a, 302b, 302c. Beams 302a and 302b have moderate channel equalisation applied by a power control hologram and routing towards the output port 305 applied by a routing hologram. As explained previously it is advantageous to use a routing hologram as it deflects the beams from their specular output direction and hence increases the available depth of attenuation. Beam 302c has strong attenuation applied in order to "block" the channel: this is achieved by selecting holograms that direct the light well away from the output port 305 towards, for example, an optical absorber 306. The processed beams are reflected back from the SLM 320 towards the main lens 310 and then refracted back by the main lens towards the diffraction grating 300. Assuming the SLM 320 is flat, all beams subjected to the same deflection at the SLM 320 and entering the system in the same common input beam emerge mutually parallel from the diffraction grating. Curvature of the SLM 320 is compensated by small changes in the deflection angle achieved due to the holograms displayed on the SLM 320. As the light beams 302a, 302b emerge parallel from the SLM 320 they are refracted by the lens 310 to beams 303a, 303b propagating towards a common

point in the grating 300, which (having the same grating equation across the whole area of concern) diffracts the beams to provide a single output beam 302. Note that due to the action of the lens, beam 303a is parallel (but in the opposite direction) to beam 301a and beam 303b is parallel (but in the opposite direction) to beam 301b. Therefore all beams subjected to the same eventual output angle from the SLM 320 are collected into the same output port 305. Hence a system may be constructed with a single input port 304 and a single output port 305 that produces independent attenuation or level equalisation for each wavelength channel. Note that to obtain the same deflection angle for all wavelength channels, as required, the effective length of the hologram phase ramp, Ω/m, where m is the mode number of the excited diffraction order and Ω is the hologram period, should be adjusted in proportion to the channel wavelength. That is the wavelength dependence of the beam deflection should be suppressed.

As described later the channel equalisation can be uniform across each channel so as to provide the required compensation as measured at the centre of each channel. Alternatively the channel equalisation can vary across each channel, so as to compensate for effects such as amplifier gain tilt that become important at higher bit rates such as 40 Gb/s. Channels may be blocked as described earlier so as to apply policing to remote transmitters that renege on their access agreements or whose lasing wavelength has drifted too far. Furthermore the noise between selected channels may be partially or completely filtered out, as described later. Hence in a second application the

multiwavelength optical processor acts as a channel controller.

Although such processing can be applied using conventional optics the multiwavelength optical processor has a number of advantages. Compared to a series of reconfigurable optical filters the multiwavelength processor has the advantage that the channels are processed by independent blocks of pixels. Hence reconfiguration of the processing applied to one or more selected channels does not cause transient effects on the other channels. Compared to a parallel optical architecture that separates the channels onto individual waveguides/fibres before delivery to a processing device (and hence avoids the transient effects) the multiwavelength optical processor has a number of advantages. Firstly it can process the whole spectrum entering the processor (subject to the grating spectral response). Secondly the filter passband width is reconfigurable and can be as much as the entire spectrum, reducing concatenation effects that occur when filtering apart sets of channels routed in the same direction. Thirdly the filter centre frequencies are reconfigurable. Further advantages are discussed later in this application.

By having a choice of two or more deflection angles at the SLM every input channel may be routed independently to one of two or more output ports. There may also be two or more input ports. It may be shown that for one or more parallel input beams, the action of the grating and main routing lens is such that all channels at the same wavelength but from different input ports are incident at

the same transverse position at the SLM. Again this is because "parallel rays converge to the same point". Hence these channels at the same wavelength are incident on the same channel processing hologram and/or tip-tilt device. As every wavelength channel is incident on a different device, the device response may be optimised for that particular wavelength. For example if a pixellated SLM is used the deflection angle is proportional to the wavelength. Hence small adjustments in the phase ramp can be used to adjust the deflection angle to suit the wavelength to be routed. All channels incident on a particular transverse position on the SLM must be reflected from that same position. As this position is in the focal plane of the lens beams from said position will emerge parallel from the lens and travelling towards the grating. After the grating the beams will be diffracted (according to their wavelength). It may be shown that all beams entering the system in a parallel direction will emerge from the system in exactly the opposite direction. It may also be shown that all beams subject to the same output angle from the SLM will emerge coincident from the system and may therefore be collected into the same port.

Analysis of the beams at the diffraction grating in this architecture shows that the spot size required for a given wavelength channel separation and beam clipping factor C at the hologram depends on the grating dispersion but does not depend on the routing lens focal length nor the number of output ports. The beam centres must be far enough apart to provide adequate crosstalk suppression. Hence the greater the number of output beams the further the beam must be steered by the SLM and lens. As an example

consider just routing in 1-D, into the m'th diffraction order with a hologram period Ω and a routing lens of focal length f. The output beam at the diffraction grating will be offset from its zero order reflection by a distance given approximately by $f.m.\lambda/\Omega$, where λ is the optical wavelength and Ω/m is the effective length of the phase ramp on the hologram (as explained previously). To increase this offset distance the length of the phase ramp can be reduced, which tends to require smaller pixels, or the lens focal length can be increased. In practice there is a lower limit to the pixel size set by the dead space losses and the size of the pixel drive circuits, while increasing the lens focal length makes the overall system longer. This can be a particular problem when there are many output ports, even when close-packing 2-D geometries are used for the output beams.

Referring to Figure 14, another method is to put a demagnification stage between the SLM 400 and a routing lens 404. This is positioned so that the SLM 400 is in the object plane of the demagnification stage while the image plane of the demagnification stage 402 is where the SLM would otherwise be, that is in the focal plane of the routing lens 404. What appears in this image plane is a demagnified image of the SLM 400, which therefore acts like a virtual SLM 402 with pixels smaller than those of the real SLM 400 and hence a shorter effective phase ramp length. As an example consider the two lens confocal magnification stage shown in Figure 14. In Figure 14 f1 is the focal length of the first lens 401 and f2 is the focal length of the second lens 403 (closer to the virtual SLM).

The demagnification is f2/f1 while the beam-steering deflection angle is magnified by f1/f2.

While this method for increasing the effective beam deflection angle has been described and illustrated in the context of one particular routing architecture it could also be applied to other optical architectures using SLMs to process an optical beam, for routing and other applications. The operating principle is that the virtual SLM 402 has an effective pixel size and hence an effective phase distribution that is smaller in spatial extent than that of the real SLM 400, by an amount equal to the demagnification ratio of the optics. The off-axis aberrations that occur in demagnification stages can be compensated using any of the methods described in this application or known to those skilled in the art.

In an alternative embodiment the input beam or input beams contain bands of channels, each incident on their own device. In this and the previous embodiment for the channel equaliser the beam deflection or channel equalisation may vary discontinuously with wavelength.

In a third embodiment the input beam could contain one or more signals spread almost continuously across the wavelength range. The light at a particular wavelength will be incident over a small transverse region of the SLM, with, typically a Gaussian type spatial distribution of energy against position. The position of the peak in the spatial distribution is wavelength dependent and may be calculated from the grating and lens properties. For such a system the beam deflection or channel equalisation varies continuously with wavelength. The pixellated SLM is

divided into blocks, each characterised by a 'central wavelength', defined by the wavelength whose spatial peak lands in the middle of the block. A particular channel equalisation or beam deflection is applied uniformly across this block. Light of a wavelength with a spatial peak landing in between the centres of two blocks will see a system response averaged across the two blocks. As the spatial peak moves towards the centre of one block the system response will become closer to that of the central wavelength for the block. Hence a continuous wavelength response is obtained. The block size is selected with respect to the spatial width of each beam in order to optimise the system response. This method is particularly attractive for increasing the wavelength range of a 1 to N switch.

To achieve this aim the multi-wavelength architecture described earlier, should be configured so as to allow reconfigurable routing from a single input port to one of a set of multiple output ports. The length of the phase ramp used to route the beam to each output port should vary slowly across the SLM such that the wavelength variation in the deflection angle is minimised, or certainly reduced considerably compared to the case for which the phase ramp length is uniform across the SLM. Hence the transverse position of each output beam will vary considerably less with wavelength, with a consequent reduction in the wavelength dependence of the coupling efficiency at the system output. Alternatively, the length of the phase ramp can be varied spatially so as to obtain some desired wavelength dependence in the coupling efficiency.

The efficiency of a blazed diffraction grating is usually different for light polarised parallel or perpendicular to the grating fringes. In the multi-wavelength systems described above the effect of the quarter-wave plate inside the SLM is such that light initially polarised parallel to the grating fringes before the first reflection from the blazed grating is polarised perpendicular to the grating fringes on the second reflection from the blazed grating. Similarly the light initially polarised perpendicular to the grating fringes before the first reflection from the blazed grating is polarised parallel to the grating fringes on the second reflection from the blazed grating. Hence, in this architecture, the quarter-wave plate substantially removes the polarisation dependence of the double pass from the blazed grating, as well as that of the phase modulation. As is clear to those skilled in the art, this polarisation independence requires the fast and slow axes of the integrated quarter-wave plate to have a particular orientation with respect to the grating fringes. This required orientation is such that the integrated quarter-wave plate exchanges the polarisation components originally parallel and perpendicular to the grating fringes.

Referring to Figure 28 a wavelength routing and selection device 600 is shown. This device has a multiwavelength input 601 from an input port 611, and provides three outputs 602, 603, 604 at output ports 612-614.

The device 600, similar to the device of figure 12, has a grating 620, a lens 621 and an SLM 622, with the

disposition of the devices being such that the grating 620 and SLM 622 are in respective focal planes of the lens 621. Again the grating is shown as transmissive, although a reflective grating 620, such as a blazed grating, would be possible. Equally, the SLM 622 is shown as reflective and instead a transmissive SLM 622 could be used where appropriate.

The grating 620 splits the incoming beam 601 to provide three single wavelength emergent beams 605, 606, 607 each angularly offset by a different amount, and incident on the lens 621. The lens refracts the beams so that they emerge from the lens mutually parallel as beams 615,616, 617. Each of the beams 615,616,617 is incident upon a respective group of pixels 623,624,625 on the SLM 622. The groups of pixels display respective holograms which each provide a different deviation from the specular direction to provide reflected beams 635, 636 and 637. The beams 635, 636, 637 are incident upon the lens 621 and routed back to the grating 620.

In the embodiment shown, the beams 605 and 606 are finally routed together to output port 614 and the beam 607 is routed to output port 612. No light is routed to port 613.

However it will be understood that by careful selection of the holograms, the light can be routed and combined as required. It would be possible to route light of a selected frequency right out of the system if needed so as to extinguish or "block" that wavelength channel. It is also envisaged that holograms be provided which provide

only a reduced amount of light to a given output port, the remaining light being "grounded", and that holograms may be provided to multicast particular frequencies into two or more output ports.

Although the number of output ports shown is three, additional output ports can be included: with appropriate lens design the insertion loss varies weakly with the number of output ports. Although the output ports are shown in the same plane as the input it will be clear to those skilled in the art that a 2-D distribution of output ports is possible.

Hence the device 600 provides the functions of wavelength demultiplexing, routing, multiplexing, channel equalisation and channel blocking in a single subsystem or module. These operations are carried out independently and in parallel on all channels. Reconfiguration of one channel may be performed without significant long-term or transient effects on other channels, as occurs in serial filter architectures. With most conventional optics (including parallel architectures) separate modules would be required for demultiplexing, routing, multiplexing and the power control functions. This adds the overheads of fibre interconnection between each module, separate power supplies, and a yield that decreases with the number of modules. The device 600 has no internal fibre connections, and a single active element requiring power - the SLM. Each active processing operation (routing, power control, monitoring etc) requires an associated hologram pattern to be applied by the controller but may be carried out by the same SLM, hence the yield does not decrease with increased

functionality. Although integrated optical circuits can be made that combine different functions, in general they require a separate device inside the optical chip to perform each function. Again the power (dissipation) and the yield worsen with increased functionality.

Further applications of the multiwavelength optical processor are as an optical performance monitor, and as a programmable multifunction optical test set. In both applications the SLM may perform two or more different but concurrent monitoring or testing functions on two or more portions of the wavelength spectrum. This may be achieved by applying routing holograms to the pixel block associated with said portions of the wavelength spectrum that connect optically a selected input fibre or input optical source to a selected output fibre or output detector. The routing hologram applied to each portion of the spectrum may be reconfigured as required in order to perform different testing or monitoring functions on said portion of the spectrum. To each output photo detector or to each input optical source is applied control circuitry for carrying out the required tests.

Considering firstly the performance monitor, the method described later to measure the centre wavelength of a channel may be applied to a selected channel in order to monitor the lasing wavelength. Earlier in this application there is a description of how to measure the second order moments of a beam. Consider orthogonal axes u and v at the SLM. Choose the orientation of these axes such that all wavelength channels entering the system and incident on the grating in the defined parallel direction have the centres

of their associated beams along a line of constant v. Hence the position along the u axis increases with wavelength. The second order moment in the v direction is related to the spot size of a monochromatic beam. The second order moment in the u direction is related to this spot size and also the wavelength distribution of the energy in each channel. Hence by measuring second order moments, as described previously, an estimate of the channel bandwidth may be obtained. The noise power between a selected pair of channels may be measured by routing that part of the spectrum between the channels towards a photo detector. Similarly the power of a selected channel may be measured by routing towards a photo detector. One or more photo detectors may be assigned to each type of measurement allowing many parallel tests to proceed independently on different portions of the spectrum. Alternatively the control circuitry associated with each photo detector output may be designed to be able to perform two or more of the required monitor functions.

Hence the multiwavelength optical processor acts as an optical spectrum analyser with integrated parallel data processing. Conventional methods for achieving this use either a grating that is rotated mechanically to measure different portions of the spectrum with a photo detector in a fixed position, or a fixed grating with a linear photodiode array. In both cases data acquisition hardware and software and data processing are used to extract the required information from the measured spectrum. Both systems are expensive and require stabilisation against the effects of thermal expansion. The multiwavelength optical processor has no moving parts, can use as few as a single

photodiode, and can adapt the holograms to compensate for temperature changes, ageing, aberrations as described previously in this application. The multiwavelength processor also carries out the data processing to measure centre wavelength and channel bandwidth in the optical domain. When used in a communications network the optical performance monitor would pass the processed data from the measurements to a channel controller, such as the one described previously, and also to a network management system. The signal for monitoring would be tapped out from a monitor port at the channel controller or from a routing system or from elsewhere in the network. The monitor processing could be implemented with the same or a different SLM to the channel controller. Monitor processing can also be implemented with the same or different SLMs used to route beams in the add drop routers and routing modules described later in this application. The control electronics for the monitor processing can be integrated with the control electronics for the pixel array.

With reference to figure 30, the programmable multifunction optical test set 900 has a multiwavelength optical processor 928 with one or more inputs 901, 902 from optical sources, 903, 904 each with control circuitry 905, 906 for performing one or more tests of optical performance. The channel equalisation and blocking functions described earlier may be used to adapt the spectrum of the selected source to suit a particular test. The channel filtering functions described later may be used to synthesise a comb or some other complex wavelength spectrum from a selected broadband optical source. A

further input 907 from an optical source 910 may be used to exchange data and control information from control and communications software 929 with the same 900 or one or more other optical test sets, allowing remote operation over the fibre under test, or some other fibre. One or more outputs ports 911, 912 from the multiwavelength optical processor are connected to a set of optical fibre transmission systems (or other devices) 913, 914 to be tested. Routing holograms are applied to the pixels associated with the selected parts of the spectrum to direct said parts of the spectrum or said data and control information to the selected output port. A further or the same multiwavelength optical processor has input ports 917, 918 connected to the set of optical fibre transmission systems (or other devices) 915, 916 under test and output ports 919, 920 connected to a set of one or more photo detectors, 921, 922 each with associated control circuitry 925, 926 for carrying out testing functions. A further photo detector 924 connected to a further output port 923 is used to receive data and control information from one or more other test sets. Routing holograms are applied to direct the signals from the selected input port to the required photo detector. The optical monitor functions described above can be applied to the signals. The frequency shaping of the source or spectrum can take place at the transmitting test set or the receiving test set. The control electronics for the test set 927 and control and communications software 929 can be integrated with the control electronics for the pixel array.

Conventionally, different optical sources would be used to perform different types of test on the wavelength

and transmission properties of fibres or devices under test; a separate optical switch would be used to poll the devices under test, and an external communications link would be used for communication of data and control information with a remote test set. However, the multiwavelength optical processor may be used to provide a multifunction programmable optical test set that is capable of remote operation. The test set may include as few as a single source and a single photo detector and performs a wide range of tests on fibres or devices selected from a group of fibres or devices attached to the test ports of the multiwavelength processor.

A multiwavelength system with two inputs and two outputs can work as an add/drop multiplexer. Add-drop multiplexers are usually used in ring topologies, with the 'main' traffic travelling between the ring nodes, and 'local' traffic being added and dropped at each node. Considering each node, one input (main in) is for the ensemble of channels that has travelled from the 'previous' routing node. The second input (add) is for the ensemble of channels to be added into the ring network at the add/drop node. One output (main out) is for the ensemble of channels travelling to the 'next' routing node while the second output (drop) is for the ensemble of channels to be dropped out of the ring network at the node. If a particular incoming wavelength channel is not to be 'dropped' at the node, then the channel-dedicated device at the SLM should be configured to route the incoming wavelength from the main input to the main output. However, if a particular incoming wavelength channel is to be dropped, then the channel-dedicated device at the SLM

should be configured to route the incoming wavelength from the main input to the drop output. In this case the main output now has available capacity for an added channel at that same wavelength. Therefore the channel-dedicated device at the SLM should also be configured to route the incoming wavelength from the add input to the main output.

The multiwavelength optical processor described in this application distributes wavelength channels across and collects the wavelength channels from a single SLM, allowing the SLM to provide a set of one or more processing operations to each of the channels. However, in most conventional reconfigurable add drop multiplexers, the routing has to be carried out in two successive stages. Usually a first 1x2 switching stage either drops the channel or routes the channel through, while a second 2x1 switching stage either receives the through channel from the first stage or receives an added channel. Fortunately, careful choice of the deflection angles applied by the SLM, and the sharing of the same hologram by input signals at the same wavelength, allows add drop routing to be carried out in a single stage. Hence add drop routing may be conveniently applied in an independent and reconfigurable manner to every wavelength channel in the multiwavelength optical processor.

An explanatory diagram is shown in Figure 13a.

Referring now to Figure 13a, an SLM 141, used in the context of the multi-wavelength architecture, has a pixel block 140 and/or tip-tilt device upon which a main input beam 130 is incident, at an angle m1 to the normal 142.

The main beam has a zero order or specular reflection 130a. Holograms are made available that will cause deflections at $+\theta_1$ to the specular direction and $-\theta_2$ to the specular direction. Due to the display of a first hologram on the pixel block 140, the main output is deflected by $+\theta_1$ from the specular direction to a main output beam 132. An add input 131 is incident at an angle a1 on the block 140, and produces a zero order reflection 131a. The device also has a drop output beam direction 133.

When the hologram applying the deflection of $+\theta_1$ is displayed, light at the relevant wavelength entering in the add direction 131 is not steered into either of the main output beam direction 132 or the drop output beam direction 133. Effectively it is 'grounded'. This feature may be used to help to stop crosstalk passing between and around rings.

When the hologram applying the alternative deflection of $-\theta_2$ is applied, the add input is routed to the main output beam direction 132 while the main input is routed to the drop output beam direction 133.

In the interests of clarity, a simplified diagram may be used to explain an add-drop using 1-D routing. This is shown in figure 13b in which the point 134 represents the output position of the specular reflection from the add input while the point 135 represents the output position of the specular reflection from the main input. When a first routing hologram is applied the main output beam is deflected by an angle of $+\theta_1$ and therefore the output position of the main beam is deflected by an offset of $f.\theta_1$,

compared to the output position 135 of its specular reflection. Here f is the focal length of the routing lens. In figure 13b this deflection is represented as a vector 136a and the output beam is routed to the main output 137. The beam from the add input is subject to the same angular deflection with respect to its specular reflection and is thus deflected by a vector of equal length and the same direction 136b with no output port to receive it this beam is "grounded". When a second routing hologram is applied the main output beam is deflected in the opposite direction by a vector 138a to arrive at a drop output 139. The beam from the add input is deflected by an identical vector 138b to arrive at the main output 137.

The example in Figure 13a assumes 1-D routing due to the hologram. Given an ability to route in 2-D, either with two orthogonal tip-tilt electrodes or a 2-D pixel array (as described previously) the arrangement of the four ports can be generalised, as shown in Figure 15. The use of 2-D routing allows closer packing of the input and output beams reducing off-axis aberrations. In Figure 15 the output positions are shown in 2-D. The point 151 represents the output position of the zero order (specular) reflection from the add input while the point 152 represents the output position of the zero-order reflection from the main input. The hologram deflections are represented as vectors 155a, 155b, 156a and 156b. Vector 155b has the same length and direction as vector 155a and vector 156b has the same length and direction as vector 156a. When a first routing hologram is applied the add input beam is deflected from its specular output position 151 by the vector 155b to the main output 154 while the

main input is deflected from its specular output position 152 by the identical vector 155a to the drop output 153. When the alternate routing hologram is applied the main input is deflected from its specular output position 152 by the vector 156a to the main output 154 while the add input is again 'grounded' due to deflection by the identical vector 156b.

In this general configuration there are six variables. These are the output positions of the main output and drop output, the positions of the zero order reflections from the main input and add input, and the two hologram deflections. Of these six variables only three are mutually independent.

For example, selection of the input position for the main input with respect to the routing lens axis defines the output position of the zero order reflection, 152. If this is followed by selection of the output positions for the main and drop outputs with respect to the routing lens axis then all three independent variables have been defined. Hence the required hologram deflections are determined as is the input position for the add input with respect to the routing lens axis (which then defines 151).

Figures 13a, 13b and 15 show the hologram deflections required to provide add-drop routing: figures 13a and 13b assume 1-D routing while figure 15 assumes 2-D routing. A multiwavelength add-drop architecture using such hologram deflections is shown in figure 29. Compared to other methods for achieving add-drop functionality, the advantages are as described previously for figure 28.

Turning now to Figure 29, an add/drop multiplexer device 700 has two input ports 701, 702 and two output ports 703,704. The first input port 701 is for an input beam 711 termed "add" and the second input port 702 is for a second input beam 712 termed "main in" having two frequencies in this embodiment. The first output port 703 is for a first output beam 713 termed "drop" and the second output port 704 is for a second output beam 714 termed "main out"

The input beams 711, 712 are incident upon a grating 720 that deflects the beams according to wavelength to provide emergent beams 731, 732 and 733. The emergent beams 731, 732 and 733 are incident upon a lens 722 having its focal plane at the grating 720, and the beams emerge from the lens respectively as beams 741, 742, and 743 to be incident upon an SLM 722 in the other focal plane of the lens 721. As the beams 741, 742 do not originate on the grating 720 from the same location, they are not mutually parallel when emerging from the lens 721. The beam 743 is from a point on the grating 720 common to the origin on the grating 720 of beam742, and hence these beams are mutually parallel. Although the grating is drawn as transmissive and the SLM as reflective, these types are arbitrary.

The first beam 731 and the third beam 733 are at the same wavelength, hence they emerge parallel from the grating 720 and are refracted by the lens 721 propagating as beams 741 and 743 respectively to a first group or block of pixels 723 on the SLM 722. This pixel block 723 applies the required hologram pattern that routes a channel

entering the add port 701 to the main output 704, and also routes a channel entering the main input 702 to the drop port 703. Hence the first group of pixels 723 deflects the first beam 741 to provide first reflected beam 751, and deflects the third beam 743 to provide third reflected beam 753.

The second beam 732 is at a different wavelength to the first and third beams 731 and 733 and therefore emerges at a different angle from the grating 720. This third beam is refracted by the lens 721 and propagates as beam 742 to a second group of pixels or pixel block 724 on the SLM 722. This second group of pixels applies the hologram pattern that routes a channel entering the main input port 702 to the main output port 704 and "grounds" a channel entering the add port 701. The second group of pixels 724 deflects the second beam 742 to provide the second reflected beam 752. The holograms on the first and second groups of pixels are selected, (examples were described for figures 13a, 13b and 15), so that the first and second reflected beams 751,752 are mutually parallel; the third beam 753 is routed in a different direction. The consequence of this is that the first and second beams 751,752, after passing again through the lens 721 become incident at a common point 726 on the grating 720, and emerge as main out beam 714. The third beam 753 is incident upon a different point on the grating 720 and emerges into as the drop beam 713.

In most cases ring networks are bi-directional, with separate add/drop nodes for each direction of travel. In some networks a loopback function is required. This allows isolation of one segment of the ring in case of link

failure, for example. It also allows the transmission systems for both directions of a link between two nodes to be tested from a single node. This latter function is useful to confirm that a failed link has been repaired. Loop back requires the main input on each add/drop node to be routed to the main output on the other add/drop node, as shown in Figure 16.

The figure shows a first module 161a and a second module 161b. The first module 161a has a main input 162a, an add input 166a, a loop back input 165a, a main output 163a, a drop output 167a and a loop back output 164a. The second module 161b has a main input 162b, an add input 166b, a loop back input 165b, a main output 163b, a drop output 167b and a loop back output 164b.

The node is divided into two sides: a west side 168 and an east side 169. Loop back may be required for one or for both sides of the node. Channels coming from the ring enter the first module 161a on a main input 162a and enter the second module 161b on a main input 162b. In normal operation through channels will be routed from the main input 162a to the main output 163a and from the main input 162b to the main output 163b.

In loop back operation for the west side 168 the through channels entering the input 162a on the first module 161a are routed to the loop back output 164a. This output 164a is connected to the loop back input 165b of the second module 161b. In loop back operation for the west side all channels entering the input 165b are routed to the main output 163b of the second module 161b.

In loop back operation for the east side 169 the through channels entering the second module 161b on the main input 162b are routed to the loop back output 164b. This output 164b is connected to the loop back input 165a of the first module 161a. In loop back operation for the east side 169 all channels entering the input 165a are routed to the main output 163a of the first module 161a.

The function can be implemented in the four port add drop node (explained in figures 13, 13a, 15 and 29) by selecting a further hologram deflection 179a and 179b, as shown in Figure 17. In the four port architecture both sides of the node loop back at the same time. This is due to the sharing of the same hologram by input signals at the same wavelength. In figure 17 the vector 179a deflects the main input from its specular output position 172 to the loop back output 176. The identical vector 179b is applied by the shared hologram to the loop back input such that it is deflected from its specular output position 173 by the identical vector 179b to the main output 175. The other vectors 177a, 177b, 178a and 178b are used for normal add-drop operation: 174 is the drop output and 171 is the specular output position for the add input.

When such a hologram is applied the main input is routed to the loopback output and the loop back input is routed to the main output. The two add/drop nodes are then connected as in Figure 16.

The loop back function can be implemented in other add drop architectures (described later) by reserving drop

ports for loop back out and add ports for loop back in. In these other architectures the loop back may be applied to just one side of the node, as well as to both sides.

The method used to provide loop back ports may also be applied to the multiport add drop (figure 18). This method may be used to provide cross connection ports to exchange channels between adjacent add drop nodes.

It is also possible to devise holograms for multicast, i.e. forwarding an incident light beam to each of several outputs. Such a hologram can be applied to route the main input to two outputs, with vectors 177a and 178a (in figure 17). In this case the device is performing a drop and continue function. This is required to provide a duplicated path at nodes connecting two touching ring networks.

Alternatively, or additionally, additional inputs and outputs can be provided so as to have a separate input for each added channel and a separate output for each dropped channel. This saves the expense and space taken up by additional filtering and/or wavelength multiplexing components that would otherwise be used to combine all added channels onto a common add port, and to separate all dropped channels to individual receivers. An example layout is shown in Figure 18. In such an implementation care must be taken that sufficient distance is provided between the zero order reflections from each input, and the output positions for each output, so as to control the crosstalk. In Figure 18 deflection v2 is used to deflect channels entering the main input from the specular output position m0 to the main output position m2. Deflections v4

to v7 are used to route from the four add inputs (with specular output positions a1, a2, a3 and a4) to the main output m2. Identical deflections v4 to v7 are applied by the shared holograms to deflect the main input from its specular output position m0 to the four drop outputs d1 to d4. For example if wavelength channels $\lambda 5$ and $\lambda 7$ enter on add input 2 which has its zero order (specular) reflection at a2, the holograms associated with these wavelength channels are configured to produce deflection v5. Hence these two channels will exit from the main output m2. Any channels entering the main input on these two wavelengths will experience the same hologram deflection, and will then exit from output d2.

In one implementation of the multiwavelength architecture the optics between any input fibre and the corresponding input beam that arrives at the diffraction grating, is such that the beam spot that arrives at the SLM is an image of the beam spot that leaves the input fibre. Similarly the optics between any output beam and the corresponding output fibre is such that the beam spot that arrives at the output fibre is an image of the beam spot that leaves the SLM. An example embodiment that would achieve this behaviour is to have an individual collimating lens associated with and aligned to every optical fibre.

Referring to Figure 27, it is assumed that two adjacent channels are being routed in a different direction to the channel under consideration. Thus the beam under consideration has a first hologram 500, and the two adjacent beams have contiguous holograms 501 and 502 respectively. The beam under consideration has an

intensity distribution shown as 510. Hence the energy incident from the beam under consideration on the two adjacent holograms, shown as 511 and 512, is lost. Given a perfect optical system what arrives at the selected output fibre is a demagnified image of the truncated beam. Due to the way that the optical system works, the centre line of the beam incident at the output fibre will be lined up with the centre of the output fibre (indeed the beam deflection angle at the SLM should be adjusted so this is the case).

To each wavelength channel there is assigned a block of pixels applying the same routing hologram. Preferably this block of pixels should be chosen such that an input light beam exactly at the centre wavelength for the channel arrives at the SLM such that the centre of the beam is within a half pixel's width of the centre of the assigned pixel block. In the presence of thermal expansion of the optomechanical assembly the centre of said beam may arrive at a different point on the pixel block resulting in partial loss of signal as more of the beam tails are lost. This problem can be avoided either by expensive thermally stable optomechanics or by dynamic reassignment of pixels to the blocks associated with each channel. For this to be achievable the pixel array should be continuous. This continuity of the pixel array is advantageous for thermal stability whether or not the imaging criterion used to calculate the filter response is satisfied.

The way that the architecture behaves is that for all parallel beams incident on the grating, the position at which the beam at a particular wavelength reaches the SLM is independent of the input port. Hence a reference signal

of known wavelength will be incident at the same particular point on the SLM, whether it comes in with any of the signals to be routed, or on a separate input. The method to measure the position of the beam centre can be used on one or a pair of such reference signals. Given this information, an interpolation method can be used to measure the wavelength of some other signal entering the system on one of its input ports, given the measurement of the position of the centre of the beam associated with said other signal. This information can be used to monitor the behaviour of the original transmitter lasers, and also to inform the controller for the routing system.

Furthermore, given the position of said reference beams as they reach the SLM, and also the centre wavelength(s) of (an)other signal(s) entering the system, the position of the beam(s) at said centre wavelength(s) upon the SLM may also be calculated. This information can be used to control the adjustment of the pixel blocks and/or holograms used to route and control said other signal(s). Conversely the position of said reference beams may be used to select a pixel block that provides a given required centre wavelength for a filter. Hence reconfigurable assignment of pixel blocks may be used to tune the centre wavelength of one or more filter pass bands.

For the purpose of calculating the wavelength filtering response it is assumed that the centre of the beam at the centre wavelength of the channel (shown as 500 in figure 27) arrives exactly at the centre of the associated pixel block. With reference to figure 31, as

the wavelength is increased above the centre wavelength of the channel the centre line 946 of the beam 940 lands at a distance 941 away from the centre 945 of the pixel block or hologram 942. As a result of the offset 941 due to wavelength difference, the beam loses more energy 943 to the adjacent hologram 944. Assuming perfect imaging, what arrives at the output fibre is a demagnified image of this truncated beam.

An important difference for the multi-wavelength architecture, compared to conventional wavelength demultiplexers, is that a wavelength difference from the centre of a wavelength channel does not (to first order) result in an offset error of the beam at the output. This is because of the way the second pass from the grating 'undoes' the dispersion of the (fixed) diffraction grating, as was shown, for example, in figure 12. Hence the original centre line of the truncated beam should be aligned with the peak of the fundamental mode in the output fibre, or, equivalently, aligned with the optical axis of the output fibre. Standard methods for the calculation of coupling efficiency into single-mode fibres have been used to calculate the filter characteristics. Example results are in Figures 19 and 20.

Figure 19 shows the relative transmission Tlo for in-band wavelengths as a function of the ratio of the wavelength offset u to centre of the wavelength channel separation. Each curve in the Figure is for a different value of the hologram clipping factor (CR) in the range 2 to 4: this factor is defined as the ratio of the hologram width to the beam spot size at the hologram.

Figure 20 shows the relative transmission Thi inside the adjacent channel, with u=1 at the centre of the adjacent channel while u-0.5 is at the boundary with the adjacent channel. Again, each curve in the Figure is for a different value of the hologram clipping factor (CR) in the range 2 to 4. Figures 19 and 20 also show that a change in the width of the pixel block assigned to the filter passband (that is a change in CR) will change the passband width and extinction rate at the edges of the passband. Hence reconfigurable assignment of pixel blocks may be used to tune the shape and width of the filter pass bands.

Independently of the clipping factor, the suppression at the edges of the wavelength channel is 6 dB and the full width half maximum (FWHM) filter bandwidth is approximately 80% of the channel separation. Comparison of the different curves in Figure 19 shows that the flatter the filter passband the steeper the skirts at the edges, leading to greater extinction of the adjacent channel, as shown in Figure 20.

This behaviour is advantageous as it avoids the usual tradeoff between adjacent channel extinction and centre flatness. Good centre flatness means that the filters concatenate better, so more routing nodes using such filters can be traversed by a signal before the signal spectrum and hence fidelity starts to deteriorate. Good adjacent channel extinction is also important as it prevents excessive accumulation of crosstalk corrupting the signal.

For example, in a known conventional wavelength demultiplexer the filter pass bands are Gaussian and the 1 dB and 3 dB filter bandwidths are inversely proportional to the square root of the adjacent channel extinction (in dB), such that the greater the extinction, the narrower the filter passband. For the same FWHM filter bandwidth of 80 % a Gaussian filter would have an adjacent channel extinction weaker than 20 dB, leading to crosstalk problems. However for the SLM multi-wavelength architecture the adjacent channel extinction is better than 30 dB, avoiding such problems in most known networks.

As is well-known to those skilled in the art, an arbitrary beam incident on an optical fibre couples partially into the fundamental mode of the fibre with the rest of the beam energy coupling into a superposition of the higher order modes of the fibre. The higher order modes may be stripped out with a fibre mode stripper. The coupling efficiency into the fundamental mode is given by the modulus squared of the ratio of an overlap integral divided by a normalisation integral. The overlap integrand is the product of the incident field and the fundamental mode. The normalisation integrand is the product of the fundamental mode with itself.

Figures 33 and 34 are included with the aim of explaining the behaviour of the 'imaging filter' as described above. Figure 32 shows the truncated incident beam profiles 960-964 as the wavelength is increased from the centre of the channel under consideration, 960, to the centre of the adjacent channel, 964. Truncated beams 961, 962 and 963 are for wavelength differences of a quarter, a

half and three-quarters, respectively, of the channel separation. In the diagram the truncated beam profiles are offset vertically for clarity. The beam profiles are aligned horizontally as they would be physically at the output fibre; the original centre of each truncated beam is aligned with the centre of the fibre fundamental mode. This is because, as explained above, a wavelength difference from the centre of a wavelength channel does not (to first order) result in an offset error at the output. Beam 965 is the fundamental mode of the fibre. Figure 33 shows the overlap integrands 970-974 of the truncated incident beams with the fundamental mode of the fibre, as the wavelength is increased from the centre of the channel under consideration, 970, to the centre of the adjacent channel, 974. The normalisation integrand, 975, is also shown. The results in the figures show that the overlap integrand 974 has almost vanished explaining why the adjacent channel extinction is very strong. Overlap integrands 971 and 972 are for wavelength differences of a quarter and a half, respectively, of the channel separation. These results explain why the overlap integrand decreases slowly with wavelength difference in this range leading to a flat passband centre. In particular for the halfway case, 972, the overlap integral is exactly half of the normalisation integral (from integrating 975). Hence the amplitude transmission coefficient at this wavelength difference is a half with a power extinction of 6 dB, as was shown in figure 19. Therefore two factors are responsible for the excellent filter characteristics. The first factor is that the field incident on the fibre is an image of the field reflected from the SLM. The second factor is that the second pass

from the grating undoes the dispersion applied by the first pass from the grating, such that whatever the wavelength offset inside the collected channel, (to first order), the peak of the reflected truncated beam is aligned with the peak of the fundamental mode of the fibre.

By way of comparison, Figures 34 and 35 illustrate the filtering process for a conventional wavelength demultiplexer. In Figure 34 the centre of a first beam 984 is aligned with the optical axis 980 of the centre of a first optical fibre or optical waveguide 981. Hence the first beam 984 is at the centre wavelength of the channel collected by the first optical fibre 981. A second optical fibre 983, adjacent to the first fibre 981, has an optical axis 982. A second beam 988 is aligned with the optical axis 982 of this second optical fibre. Hence the second beam is at the centre wavelength of the channel collected by the second optical fibre, that is at the centre of the adjacent optical channel to that collected by the first fibre. Beams 985 to 987 are at wavelength differences from the first beam 984 of a quarter, a half, and three-quarters, respectively, of the wavelength separation between the two adjacent channels. The coupling efficiency of each of the beams 985 to 988 into the first optical fibre 981 again depends on the overlap integral of the respective beam with the fundamental mode of the fibre 981. This is mathematically identical to the overlap integral of the respective beam with the first beam 984.

Figure 35 shows the overlap integrands 994 to 998 plotted against a vertical axis 990. The spatial width and shape of each curve is identical, as may be shown

analytically. Hence the overlap integrand is proportional to the amplitude of the curve, as may be read from the axis 990. Curve 994 is the overlap integrand at the centre of the channel, and is the product of the distribution 984 of figure 34 with itself. This curve has an amplitude of 1.0 and hence maximal coupling efficiency. Curves 995 to 997 are the overlap integrands at wavelength differences from the channel centre of a quarter, a half, and three-quarters, respectively, of the wavelength separation between the two adjacent channels. Curve 998 is the overlap integrand at the centre of the adjacent wavelength channel. The coupling efficiency is given by the square of the amplitude of the overlap integrand. The results in figure 35 show that the coupling efficiency for the conventional wavelength demultiplexer decreases more quickly around the centre of the filter passband than for the 'imaging' filter discussed in this application. The results also show that the adjacent channel extinction is weaker for the conventional demultiplexer.

Figures 34 and 35 also explain why there is a performance tradeoff for the conventional multiplexer between filter passband flatness and adjacent channel extinction: to increase the width of the filter passband the beams 985-986 must be incident closer to the first optical fibre 981. Necessarily the beams 987-988 will also be closer to the first optical fibre, reducing the extinction of the adjacent channel, and requiring the second optical fibre 983 to be moved closer to the first fibre 981.

Figures 32 and 33 explain why the imaging filter behaves in a different way, such that a broader filter passband is associated with a greater extinction of the adjacent channel. Beam 960 in figure 32 shows the truncated reflected beam at the centre of the filter passband. The first and second amplitude discontinuities 966a, 966b are due to the two edges of the hologram. An increase in the hologram width relative to the spot size moves these two discontinuities outwards. The significant amplitude discontinuity in the middle beam 962 is exactly at the centre of said beam, whatever the hologram width. This is because said middle beam is associated with a wavelength halfway between the centres of adjacent channels. Hence the coupling efficiency for this halfway point is 6 dB, independently of the hologram width. The significant amplitude discontinuity in the quarterway beam, 961, is exactly halfway between the first amplitude discontinuity, 966a of the centre beam 960 and the significant amplitude discontinuity in the halfway beam, 962. As the first discontinuity 966a moves outwards due to an increased hologram width (in the direction of arrow 967) the significant discontinuity in the quarterway beam must move in the same direction, increasing the overlap integral and improving the filter passband centre flatness. Similarly as the second discontinuity 966b moves outwards (in the direction of arrow 968) the significant discontinuities in the three-quarter way beam 963 and adjacent beam 964 must move in the direction of arrow 968, decreasing the overlap integral and improving the adjacent channel extinction. This explanation reinforces the argument that the two factors described above (imaging and the second 'undoing' pass from the grating) are responsible

for the excellent filter characteristics. This explanation also explains how the selection of the width of the block of pixels assigned to a channel may control the filter passband characteristics.

Analytically it can be shown that the filter response for dropping or adding an isolated channel is purely real. Hence there are no phase distortions with this type of dropping filter. This is advantageous because in many 'flat-top' filters the phase distortions associated with the steep skirts may distort the pulses, particularly in higher bit-rate transmission systems for which the signal bandwidth is broader.

In these calculations it was assumed that the blocks of pixels assigned to each wavelength channel are contiguous. That is there are no 'guard bands' of pixels between each block. Further analysis showed that introducing such guard bands has the effect of decreasing the channel bandwidth for a given channel separation. Hence, preferably the pixel blocks assigned to each wavelength channel should be contiguous. Alternatively guard bands can be used to route in a third direction to deliberately narrow a channel bandwidth, if required.

While the above discussion is for the case of an isolated channel, in which both adjacent channels are routed in a different direction to the channel under consideration, there are also filtering effects that can occur when one or both adjacent channels are routed in the same direction. These effects are caused by 'stitching errors' at the adjacent edges of a pair of holograms

routing in the same direction. For example a stitching error of pi causes (in theory) complete extinction of a light beam at a wavelength exactly halfway between the centres of two adjacent channels, while for an absence of stitching error at either side of a hologram, the transmission is uniform right across the entire channel. Intermediate stitching errors cause intermediate extinction. This acts as an additional programmable filtering mechanism and can be used to advantage to partially or completely filter out amplifier noise between selected channels, if required. Alternatively when maximally flat passbands are required the stitching error should be minimised.

As described previously, all channels entering the architecture at the same wavelength are incident on the same hologram. This is because the input beams are arranged to be parallel as they arrive at the diffraction grating, such that all channels at the same wavelength emerge parallel from the diffraction grating. As the diffraction grating is at the focal plane of the lens the beams therefore converge towards the same point in the other focal plane of the routing lens (or equivalent mirror), at which point the SLM is placed.

Hence for the four port and multiport add/drop devices the channels entering on the main beam (from the main input fibre) share a hologram with those channels at the same wavelength entering on an add port. When configured with one particular routing hologram the channel entering the main input is routed to the (selected) drop port while the channel entering the add port is routed to the main output. Therefore any channel equalisation applied to an added

channel will also be unavoidably applied to the dropped channel. Hence it is not possible to carry out independent channel equalisation on added and dropped channels.

This problem does not occur, however, for the devices with a single input and/or with a single output. This is because in these devices there is no sharing of individual holograms between channels entering or leaving on different ports. Nor does the problem occur for the devices with multiple inputs and multiple outputs, for channels routed from the main input to the main output.

Another configuration of the multi-wavelength architecture is to have a single input port and a separate output port for every wavelength channel and SLM devices for each channel capable of providing a set of many deflections. When configured so that a single channel leaves on each output port, the device acts as a reconfigurable demultiplexer such that the assignment of a particular wavelength to each output port can be changed dynamically.

Conventional wavelength demultiplexers are not reconfigurable and are therefore less flexible as a routing component. They also have a Gaussian filtering characteristic, which is inferior to the filter characteristic of the SLM multiwavelength optical processor, as described earlier. A further advantage of the invention, compared to a conventional free-space wavelength demultiplexer, is that the channel filter bandwidth is independent of the physical separation between the output fibres and also independent of the spot size of

the output fibre. In contrast, for the conventional demultiplexer, the channel bandwidth is proportional to the ratio of the output waveguide spot size to the physical separation of the output waveguides. Consequently, and in order to obtain sufficient channel bandwidth, microlens arrays are required to increase the effective spot size or waveguide concentrators are used to decrease the waveguide separation.

When used in reverse the device acts as a reconfigurable multiplexer, allowing the use of, for example, tuneable lasers at each input. In contrast, for a conventional wavelength multiplexer, fixed-tuned lasers must be used at each input.

A system with a single input port and many output ports can act as a module to form part of a modular routing node. If the system has M output ports and a single input port, then each routing device produces M different deflections, with small adjustments to compensate for wavelength differences and alignment tolerances. All devices (i.e. holograms) producing the same eventual deflection will cause the associated wavelength channel to be routed out of the same output port. Hence such a system can send none, one or many (up to the number of channels entering the input port) channels out from the same output port. The logical function of the module is to sort the incoming channels on the input port according to their required output port, as also illustrated in Figure 21. Considering firstly the case of the routing architecture shown in Figure 12. As there is a single input port, every wavelength channel has its own hologram. Hence independent

channel equalisation may be applied for all the signals flowing through the module.

One application of these modules is to use two of them to make an add/drop node, as shown in Figure 22. Figure 22 shows a first routing module 660 having one input 661 from a previous node, a through output 662 and three drop outputs 663-5, as well as two spare outputs 666,667. A second routing module 670 has a first input 671 connected to the through output 662 of the first module, three add inputs 672-4 and two spare inputs 675,676. The second module 670 has an output 677 to the next node. The second (output) module can be physically identical to the first (input) module but it is used 'in reverse'.

The first module routes all the through traffic out on a common through port 662 while providing multiple drop ports: one for each dropped channel. Any single wavelength or any set of wavelengths can be sent to any drop port. Hence each of the drop ports may connect to a local optoelectronic receiver in a local electronic switch, or to a remote customer requiring one or more channels for remote demultiplexing. The reconfigurability of the wavelength assignment means that the module acts like a wavelength demultiplexer combined with a matrix switching function, so may reduce the switching demands placed on the electronics servicing the drop ports. The ability to send a selectable set of wavelengths to the same port reduces the need for additional fibre/multiplexing components and increases flexibility. Furthermore the routing applied to each wavelength channel may be multicast, as well as unicast. Hence drop and continue operation may be provided in which

the signal is routed to a drop port and also to the through port. If a transparent optical connection is required through to access and distribution networks this multicasting may also be applied to broadcast signals to a number of drop fibres. In this multicasting operation one or more of the previously described power control methods may be applied to equalise the channels on the through and drop fibres, as required for the transmission systems and receivers to function correctly.

The first module provides any channel equalisation and monitoring required for the drop ports. Channel equalisation and monitoring for the through channels may take place in the first module, or the second module, or both.

The second module provides multiple add ports: one for each added channel. Any single wavelength or any set of wavelengths can be received at any of the input ports. This allows each of the add inputs to be a tuneable laser, which would not be possible with a conventional non-reconfigurable wavelength multiplexer. In the conventional case there are two options for providing the added channels. A first option is to use conventional non-reconfigurable wavelength multiplexing to combine the added channels, because this is much more efficient in terms of insertion loss than a non-wavelength-specific multiplexer (such as a 1:N fibre splitter used in reverse, that is a N:1 combiner). However this requires each input port of the wavelength multiplexer to have a transmitter laser at a fixed wavelength. When a particular wavelength channel is added at the node the associated transmitter is in use.

However when the network reconfigures its wavelength assignment that laser may no longer be in use. To allow complete reconfigurability a complete set of transmitter lasers must be provided, one for each system wavelength. This makes reconfigurable add drop nodes uneconomic when adding small numbers of channels, due to the large overhead of idle transmitter lasers. A second option is to use tuneable lasers, one for each added channel. With conventional optics this requires a non-wavelength-specific multiplexer, which imposes insertion loss penalties. The multi-wavelength architecture described provides a reconfigurable wavelength multiplexer with lower insertion loss than a N:1 combiner. Furthermore the routing applied to each wavelength channel can be reconfigured without transient effects on other wavelength channels, as occurs in 'serial' multiplexing architectures that have a reconfiguration capability.

Any add port can receive a reconfigurable set of wavelength channels from a remote customer. The second module also provides any channel equalisation required for the added signals. Finally the second module routes the through channels entering on the port 671 to the output 677.

The spare ports 666,667,675,676 can be used for routing selected channels to optical regenerators if the signal quality demands it; to wavelength converters to avoid wavelength blocking; to another add/drop node to allow cross-connection between rings, as shown in Figure 23, or to further modules to allow expansion, as shown in Figure 24.

Figure 23 shows a first to fourth routing modules 720, 730, 740 and 750. The first and fourth modules each have one input 721, 751, a through output 722, 752, a cross-connect output 723,753 and a number of drop outputs721, 754. The second and third modules 730,740 each have respective single output 731,741, a number of add inputs 732,742 a cross-connect input 733,743 and a through input 734, 744. The through output 722 of the first module 720 is connected to the through input 734 of the second module 730, and the through output 752 of the fourth module 750 is connected to the through input 744 of the third module 740. The cross-connect output 723 of the first module 720 is connected to the cross-connect input 743 of the third module 740, and the cross-connect output 753 of the fourth module 750 is connected to the cross-connect input 733 of the second module 730.

The first and second modules 720, 730 are on one ring and the third and fourth 740, 750 on a second ring. This cross connection capability allows a new ring network to be overlaid on an original ring network when the original ring capacity is becoming exhausted. Channels may be exchanged between the two rings at each node as required. Hence the ring network acts like a ring with two fibres per link (in each direction around the ring). The concept may be extended to three or more overlaid rings, and hence three or more fibres per link (in each direction around the ring). As is well known from many traffic studies, increasing the number of fibres per link reduces significantly a phenomenon known as wavelength blocking, such that more efficient use is made of the capacity of

each fibre. Hence cross connection between rings makes better use of the available capacity, allowing more traffic to be carried for the same investment in infrastructure. Cross connection may also be used to exchange signals between diverging rings.

Figure 24 shows expansion of a first (input) module 760 having a single input 761, and five outputs 762-6,via an optical amplifier 768 and an intermediate module 770 having four outputs 771-4. The first output 762 of the first module 760 is a through path, the third output 764 is an expansion port and provides an input to the optical amplifier 768, and the output 769 of the optical amplifier is to the intermediate module 770. The intermediate module 770 has an expansion port 771 and three new ports 772-4. Fourth and fifth outputs 765, 766 of the input module 760 form drop outputs. The same principle can also be applied to expansion of a second (output) module. The use of such modules allows extra add and drop ports to be provided without service interruption to the channels flowing through the add drop node. It also allows network operators to apply just in time provisioning, delaying investment in infrastructure until the demand is there to use it. Furthermore it is only the channels dropped or added through the expansion module(s) that are subject to an additional amplification stage. If every node in the ring were upgraded in this manner, the channels should only pass through an additional two amplification stages. This could be reduced to one additional stage by suitable assignment of the added and dropped channels to the original and expansion module.

Returning to the basic routing module shown in Figure 21. This type of connectivity would be useful in mesh networks where each node is connected by a multi-fibre link to, typically, each of between two and five nearest neighbour nodes. Each link carries traffic to and from one of the nearest neighbour nodes. Usually individual fibres in the link carry traffic in just one direction but some are bi-directional. For an example where a link has an average of six pairs of external fibres and a node has five links, then there would be thirty external incoming fibres and thirty external outgoing fibres. The function of the node is to route any wavelength channel from any incoming fibre to any outgoing fibre. Each fibre may carry many wavelength channels. Currently up to 160 channel systems are being installed although 40 or 80 channel systems are more usual.

An ideal node architecture allows the network operator to start with one or more add/drop nodes connected to one or more rings and then allow the individual add/drop nodes to be connected so that the network topology can evolve towards a mesh. The node architecture should also allow extra fibres to be added to each link as required to meet the demand, with the extra parts or modules of the node being installed as and when required. Fibre management and installation between sub-components inside the routing node is also expensive.

A known architecture for such a routing node uses a separate wavelength demultiplexer for every input fibre. The separated wavelength channels are then carried over

optical fibres to NxN optical switches. To avoid internal wavelength blocking then all channels at a particular wavelength must be connected to the same NxN switch. Hence the switch will receive channels at the same wavelength from every single input fibre. The channels leaving the switch are carried over optical fibres to a separate wavelength multiplexer for every output fibre. Hence the switch will route channels at the same wavelength towards every single output fibre.

These switches have a sufficient number of ports for added and dropped channels, and channels passing to and from wavelength conversion and optical regeneration. This sufficient number is estimated based on traffic analysis as it depends on the instantaneous mapping of channels between nodes and the wavelength and fibre allocation. Each switch may service one or more wavelength channels. In one device, the number of fibres is around 3000 resulting in significant fibre management and installation costs. Even grouping together different fibres to or from the same link and grouping together the add fibres and regenerator fibres only reduces the number of separate entities to be managed to 560.

With such a large number of fibres it is not economic to provide optical amplifiers inside the routing node to compensate for insertion losses. Another problem with this architecture is how to add in extra external fibres once the switch capacity has been exhausted with the current number of external fibres. This cannot be done without replacing every single switch. In advance it is difficult

to know how large to provision the switch to avoid or delay this problem.

An alternative node architecture uses one of the multi-wavelength architectures described to provide a separate module for every input fibre and a separate module for every output fibre. Consider first an input module. This should be designed so that none, one, many or all of the input channels may leave any of the output ports (as shown in Figure 21). These output ports are used to carry channels towards output modules and towards other parts of the node providing wavelength conversion, regeneration and ports to electronic switches, for example. A connection between an input module and an output module carries every wavelength channel mapped between the corresponding input and output fibre. Hence the logical function of an input module is to sort the incoming channels according to their destination output fibre. This logical functionality was illustrated in Figure 21.

A particular input module does not have connections to every output module. It does not have connections to output modules going back to the same neighbouring node from which the input channels have travelled, except perhaps for network monitoring and management functions. It might not need to have separate connections to every output module for the output fibres to the other neighbouring nodes. It is however provided with sufficient connectivity to the output channels on every output link to avoid unacceptable levels of wavelength blocking. For example each input module could be connected to a subset of the output modules, with an overflow system used to provide

a connection to the other output modules, when required. An output module is designed like an input module but works in the opposite direction. Hence the logical function of the output module is to collect the channels coming from each input module and direct them to a common output port.

In this architecture, the dropped channels and channels needing wavelength conversion may exit from each module on a common port or a pair of ports. As a result of using the modules it can be shown that satisfactory performance is achieved using fewer than 1000 fibres and fewer than 50 fibre groups.

Hence the total number of fibres inside the node is reduced by a factor of over 3 while the total number of fibre entities to be installed and managed is reduced by a factor of 10 or more. This represents a significant reduction in cost and complexity.

An example wavelength-routing crossconnect using the modules is shown in Figure 25. Figure 25 shows four input routing modules 790-3, each with a respective input 790i-793i and four outputs 790_{01}-790_{03} etc. and four output routing modules 794-7 each with four inputs and a respective single output 794o-797o to a respective output fibre. One output of each input module 790-3 forms a drop output. The input and output modules are associated together with input module 790 associated with output module 794, input module 791 associated with output module 795, input module 792 associated with output module 796 and input module 793 associated with output module 797. The remaining three outputs of each input module are cross-

connected to the non associated output modules, so that for example the three non-drop outputs of input module 790 are coupled to respective inputs of output modules 795, 796 and 797. Specifically, output 790_{o1} is connected to output module 795. Of the inputs to the four output modules, one per module is an add input and the remainder are connected to outputs of the input modules 790-3.

In the example the routing function carried out by each input module 790-3 is to sort the incoming channels with respect to the selected output fibre 794o-797o for example, and with reference to the figure, all wavelength channels entering the cross-connect on input 790i that need to leave the cross-connect on 795o are routed by the input module 790 to the output 790_{o1}. This output carries these channels to the output module 795 which is collecting frequency channels for output 795o. The output module combines all incoming channels onto a respective single output.

In this architecture channel equalisation may be carried out independently for all channels routed through the cross connect.

The cross connect architecture of Figure 25 is modular in that it can be used to build a range of nodes of different connectivity and dimension. The modules can be used to assemble a node like that described above, starting with only 1 or 2 fibre pairs per link and adding in extra modules to allow more fibres per link. Extra modules can be added in and connected up as and when required, allowing the network operator to delay investment in infrastructure

for as long as possible. When the node has reached, for example, 6 fibre pairs per link and the capacity begins to be exhausted there are three ways to upgrade the node. The first way is to upgrade the numbers of wavelength channels on particular fibres in each link. This requires replacing the associated modules with modules processing more channels. However the other modules (and the fibre interconnections) can remain in service. In contrast for the conventional architecture as well as upgrading the demultiplexers and multiplexers associated with the particular fibres to be upgraded, a whole set of NxN switches must be installed, one for every new system wavelength. These switches will remain under-utilised until all the fibre systems have been upgraded.

A second way to upgrade the node is to replace selected modules with models providing an increased number of fibre choices per output link allowing more fibres per link. This requires the installation of more fibre groups inside the node. In contrast for the conventional architecture every NxN switch must be replaced meaning the associated system wavelengths would be out of service on every fibre entering or leaving the node.

A third way to upgrade the node is to upgrade selected modules by cascading another module from a spare, or expansion output port, as shown in Figure 26.

Figure 26 shows a somewhat similar arrangement to Figure 24, and has an input module 860, with an input 861, five outputs 862-6, an optical amplifier 870 and an intermediate module 880 receiving the output of the optical

amplifier 870 and providing four outputs 881-4. The input module has three outputs 862-4 to existing output modules, fourth output 865 to the optical amplifier 870 and fifth output as a drop output. The first to third outputs 881-3 of the intermediate module 880 connect to new or later output modules.

The advantage of this third way is that service interruption is not required during installation.

The smallest node can have as few as two modules, which would act as an add/drop node. Several pairs of such modules can service a stacked set of rings, allowing interconnection between different rings. Adjacent rings can also be interconnected. A hybrid ring/mesh network can be created. Hence the same modular system can be used for ring networks, mesh networks and mixes of the two. It can also allow re-use of existing plant and allow an add/drop node to grow and evolve into a wavelength-routing cross-connect.

It will be clear to those skilled in the art that the use of reflective SLMs may allow optical folding to be accomplished and provide a compact system. Thus folding mirrors which may be found in some systems are replaced by SLMs that serve the dual function of folding and performance management for the system. The performance management may include managing direction change, focus correction, correction of non-focus aberration, power control and sampling. When taken together with the controller and sensors, the SLM can then act as an intelligent mirror.

As an example, this application of SLMs would be attractive in the context of free-space wavelength demultiplexers as it would help to suppress the problems associated with long path lengths.

Another example is to provide correction for alignment tolerances and manufacturing tolerances in systems requiring alignment between fibre arrays and lens arrays. In particular focal length errors in the lenses (due to chromatic aberration or manufacturing tolerance) can be compensated by focus correction at the SLM or SLMs, while transverse misalignment between a fibre and lens which leads to an error in the beam direction after the lens, can be compensated by beam deflection at the SLM or SLMs.

It will also be clear to those skilled in the art that although the described embodiments refer to routing in the context of one-to-one, it would also be possible to devise holograms for multicast and broadcast, i.e. one-to-many and one-to-all, if desired.

Although the invention has been described with reference to a number of embodiments, it will be understood that the invention is not limited to the described details. The skilled artisan will be aware that many alternatives may be employed within the general concepts of the invention as defined in the appended claims.

CLAIMS

1. A method of operating an optical device comprising an SLM having a two-dimensional array of controllable phase-modulating elements, the method comprising

delineating groups of individual phase-modulating elements;

selecting, from stored control data, control data for each group of phase-modulating elements;

generating from the respective selected control data a respective hologram at each group of phase-modulating elements; and

varying the delineation of the groups and /or the selection of control data

whereby upon illumination of said groups by respective light beams, respective emergent light beams from the groups are controllable independently of each other.

2. A method of operating an optical device according to claim 1, wherein control of said light beams is selected from the group comprising: control of direction, control of power, focussing, aberration compensation, sampling and beam shaping.

3. A method of operating an optical device according to claim 1 or 2, wherein each phase modulating element is responsive to a respective applied voltage to provide a corresponding phase shift to emergent light, the method further comprising

controlling said phase-modulating elements of the spatial light modulator to provide respective actual

holograms derived from the respective generated holograms, wherein the controlling step comprises:

resolving the respective generated holograms modulo 2pi.

4. A method of operating an optical device according to claim 1, 2 or 3, comprising:

providing a discrete number of voltages available for application to each phase modulating element;

on the basis of the respective generated holograms, determining the desired level of phase modulation at a predetermined point on each phase modulating element and choosing for each phase modulating element the available voltage which corresponds most closely to the desired level.

5. A method of operating an optical device according to claim 1,2 or 3, comprising:

providing a discrete number of voltages available for application to each phase modulating element;

determining a subset of the available voltages which provides the best fit to the generated hologram

6. A method of operating an optical device according to any preceding claim, further comprising the step of storing said control data wherein the step of storing said control data comprises calculating an initial hologram using a desired direction change of a beam of light, applying said initial hologram to a group of phase modulating elements, and correcting the initial hologram to obtain an improved result.

7. A method of operating an optical device according to any preceding claim, further comprising the step of providing sensors for detecting temperature change, and performing said varying step in response to the outputs of those sensors.

8. A method of operating an optical device according to any preceding claim, in which the SLM is integrated on a substrate and has an integrated quarter-wave plate whereby it is substantially polarisation insensitive.

9. A method of operating an optical device according to any preceding claim, wherein the phase-modulating elements are substantially reflective, whereby emergent beams are deflected from the specular reflection direction.

10. A method of operating an optical device according to Claim 3 or any claim dependent on claim 3 comprising, for at least one said group of phase-modulating elements, providing control data indicative of two holograms to be displayed by said group and generating a combined hologram before said resolving step.

11. An optical device comprising an SLM and a control circuit, the SLM having a two-dimensional array of controllable phase-modulating elements and the control circuit having a store constructed and arranged to hold plural items of control data, the control circuit being constructed and arranged to delineate groups of individual phase-modulating elements, to select, from stored control data, control data for each group of phase-modulating elements, and to generate from the respective selected

control data a respective hologram at each group of phase-modulating elements,

wherein the control circuit is further constructed and arranged to vary the delineation of the groups and /or the selection of control data,

whereby upon illumination of said groups by respective light beams, respective emergent light beams from the groups are controllable independently of each other.

12. An optical device according to claim 11, having sensor devices arranged to detect light emergent from the SLM, the control circuit being responsive to signals from the sensors to vary said delineation and/ or said selection.

13. An optical device according to claim 11 or 12, having temperature responsive devices constructed and arranged to feed signals indicative of device temperature to said control circuit, whereby said delineation and/ or selection is varied.

14. An optical routing device having at least first and second SLMs and a control circuit, the first SLM being disposed to receive respective light beams from an input fibre array, and the second SLM being disposed to receive emergent light from the first SLM and to provide light to an output fibre array, the first and second SLMs each having a respective two-dimensional array of controllable phase-modulating elements and the control circuit having a store constructed and arranged to hold plural items of control data, the control circuit being constructed and arranged to delineate groups of individual phase-modulating

elements, to select, from stored control data, control data for each group of phase-modulating elements, and to generate from the respective selected control data a respective hologram at each group of phase-modulating elements,

wherein the control circuit is further constructed and arranged, to vary the delineation of the groups and /or the selection of control data

whereby upon illumination of said groups by respective light beams, respective emergent light beams from the groups are controllable independently of each other.

15. A device for shaping one or more light beams in which the or each light beam is incident upon a respective group of pixels of a two-dimensional SLM, and the pixels of the or each respective group are controlled so that the corresponding beams emerging from the SLM are shaped as required.

16. An optical device comprising one or more optical inputs at respective locations, a diffraction grating constructed and arranged to receive light from the or each optical input, a focussing device and a continuous array of phase modulating elements, the diffraction grating and the array of phase modulating elements being disposed in the focal plane of the focussing device whereby diverging light from a single point on the diffraction grating passes via the focussing device to form beams at the array of phase modulating elements, the device further comprising one or more optical output at respective locations spatially separate location from the or each optical input, whereby

the diffraction grating is constructed and arranged to output light to the or each optical output.

17. A method of filtering light comprising applying a beam of said light to a diffraction grating whereby emerging light from the grating is angularly dispersed by wavelength, forming respective parallel beams from said emerging light by passing the emerging light to a focussing device having the grating at its focal plane, passing the respective parallel beams to an SLM at the focal plane of the focussing device, the SLM having a two-dimensional array of controllable phase-modulating elements, selectively reflecting light from different locations of said SLM and passing said reflected light to said focussing device and then to said grating.

18. A method according to claim 17 comprising delineating groups of individual phase-modulating elements to receive beams of light of differing wavelength;

selecting, from stored control data, control data for each group of phase-modulating elements;

generating from the respective selected control data a respective hologram at each group of phase-modulating elements; and

varying the delineation of the groups and /or the selection of control data.

19. An optical add/drop multiplexer having a reflective SLM having a two-dimensional array of controllable phase-modulating elements, a diffraction device and a focussing device wherein light beams from a common point on the diffraction device are mutually

parallel when incident upon the SLM, and wherein the SLM displays respective holograms at locations of incidence of light to provide emergent beams whose direction deviates from the direction of specular reflection.

20. A test or monitoring device comprising an SLM having a two-dimensional array of pixels, and operable to cause incident light to emerge in a direction deviating from the specular direction, the device having light sensors at predetermined locations arranged to provide signals indicative of said emerging light.

21. A test or monitoring device according to claim 20, further comprising further sensors arranged to provide signals indicative of light emerging in the specular directions.

22. A power control device for one or more beams of light in which the or each beam is incident on respective groups of pixels of a two-dimensional SLM, and power-control holograms are applied to the respective groups so that the emergent beams have power reduced by comparison to the respective incident beams.

23. An optical routing module having at least one input and at least two outputs and operable to select between the outputs, the module comprising a two dimensional SLM having an array of pixels, with circuitry constructed and arranged to display holograms on the pixels to route beams of different frequency to respective outputs.

24. A routing device having an input and plural outputs, the input constructed and arranged to receive a light beam having plural wavelengths, the device comprising an optical device for selecting the wavelengths of the input beam to appear in the outputs, wherein each output may contain any desired set of the plural wavelengths.

25. A routing device according to claim 24, wherein the members of the desired set may be varied in use.

26. A routing device according to claim 24 or 25, wherein at least two of the outputs contain at least one common wavelength.

27. A routing device having plural input signals and an output, the output constructed and arranged to deliver a signal having plural wavelengths, the device comprising a device for combining the wavelengths from the input signals to appear in the output, wherein each input signal may contain any desired set of the plural wavelengths of the output.

28. A method of filtering light comprising spatially distributing the light by wavelength across an array of phase-modulating elements to form plural beams, delineating a group of said phase-modulating elements to be aligned with the centre frequency of a desired channel whereby the group truncates the beams according to wavelength, controlling the group to provide images of the truncated light beams incident on the group at a selected output waveguide wherein the original centres of the truncated

light beams are substantially coincident with the centre of the output waveguide.

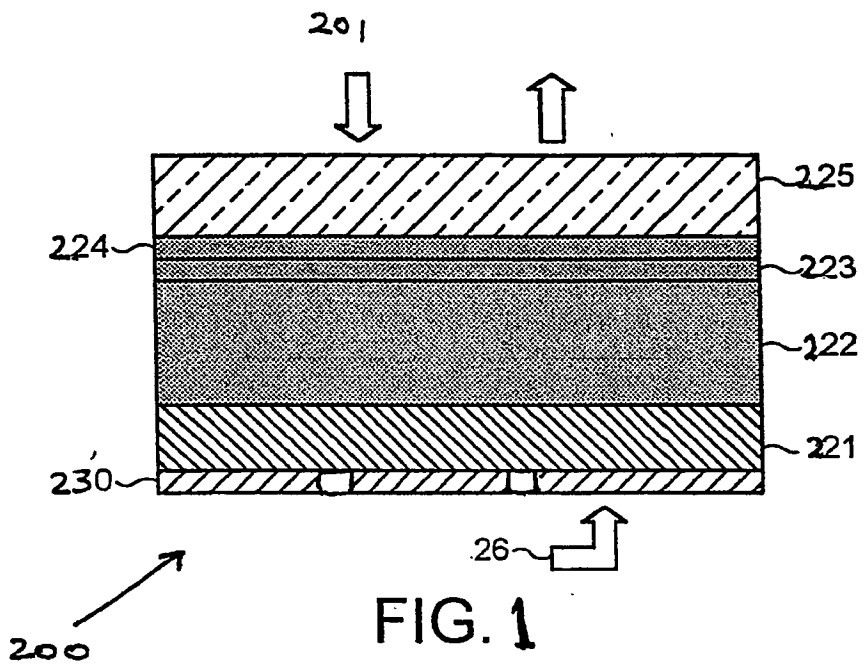

FIG. 1

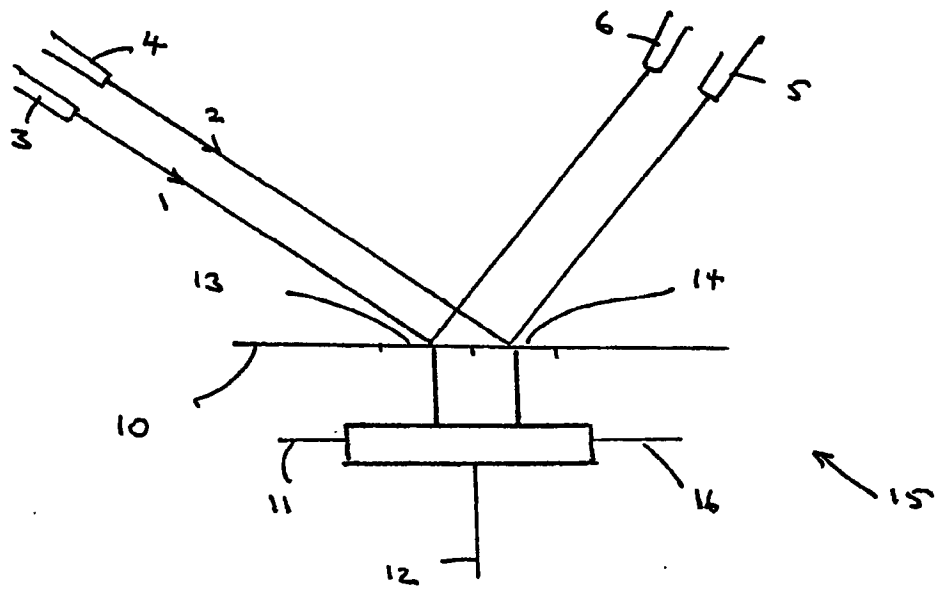

FIG 2

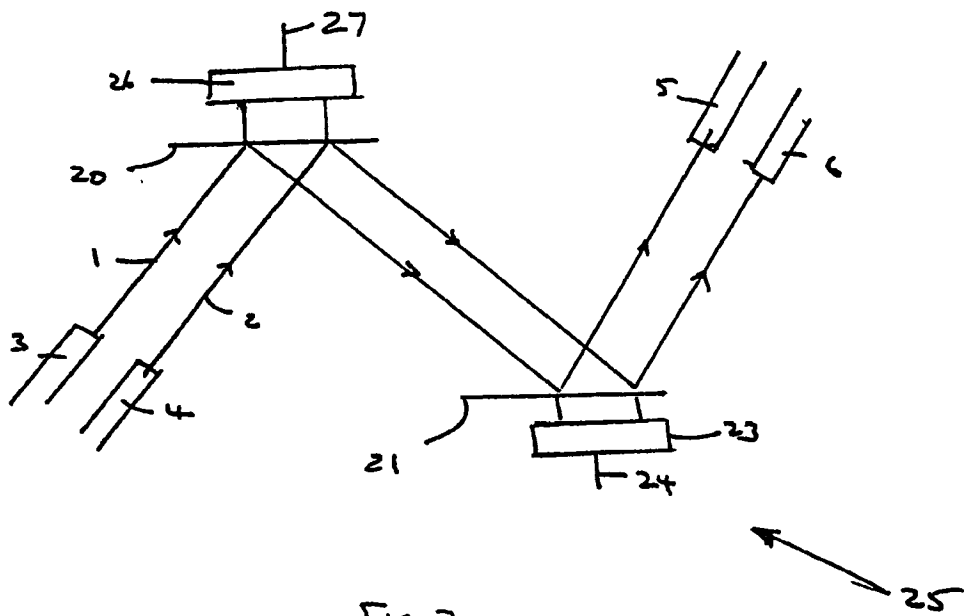

FIG 3

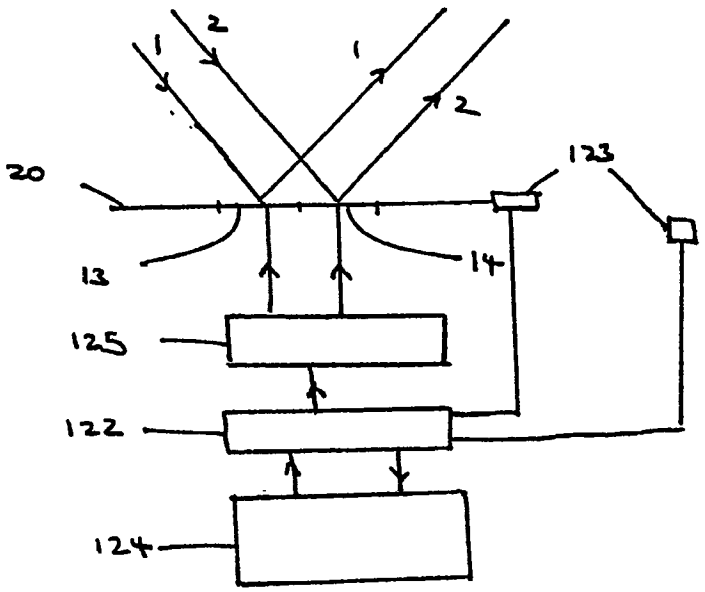

FIG 4

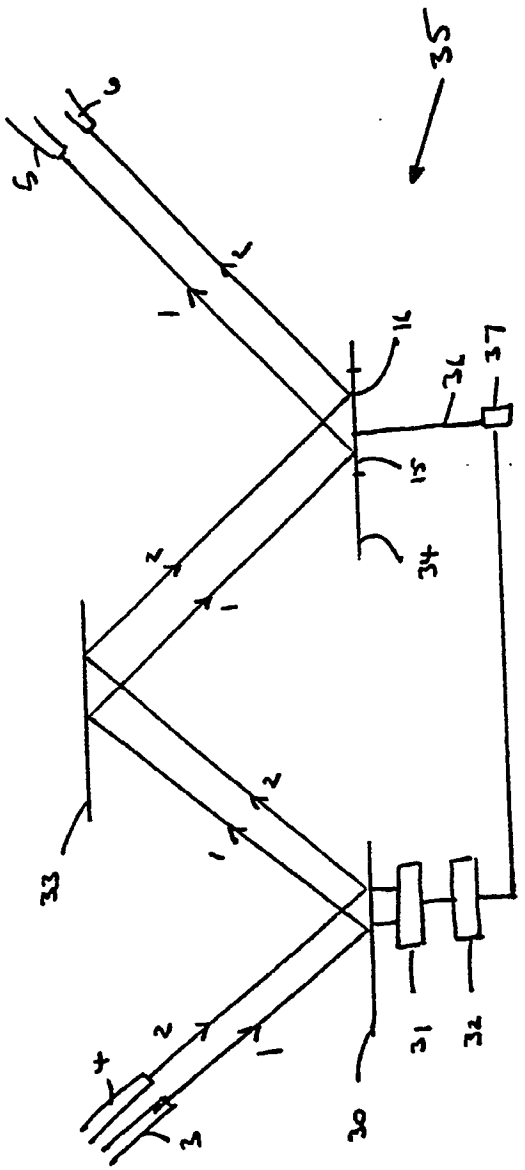

FIG 5

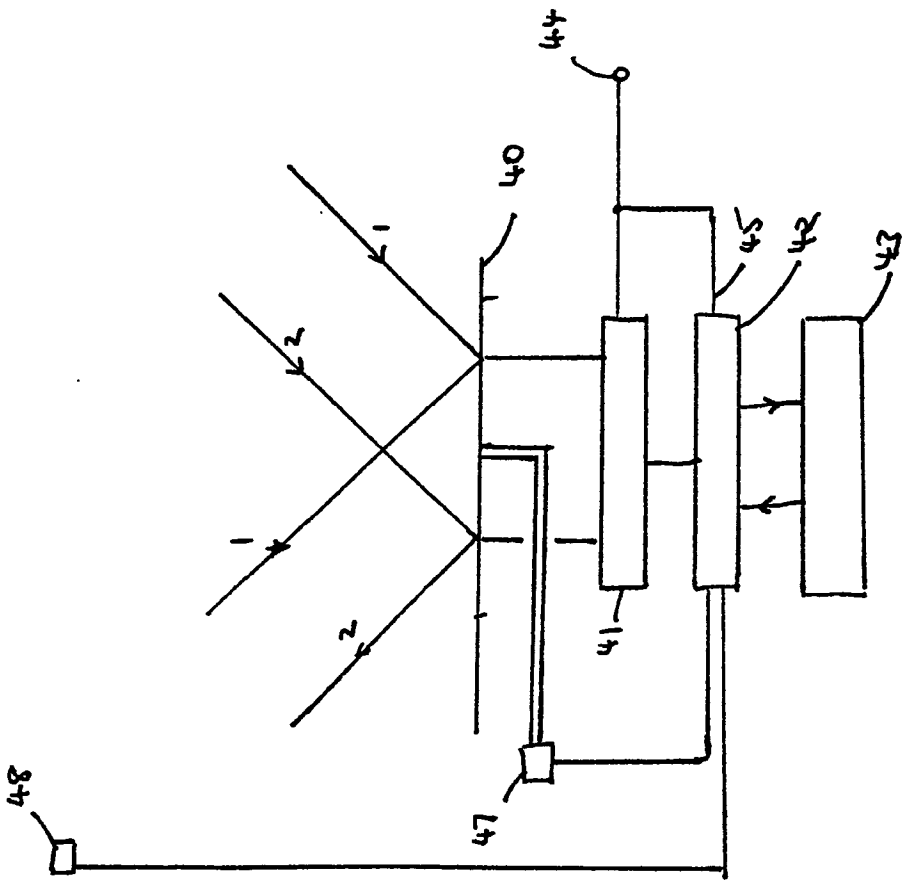

FIG 4

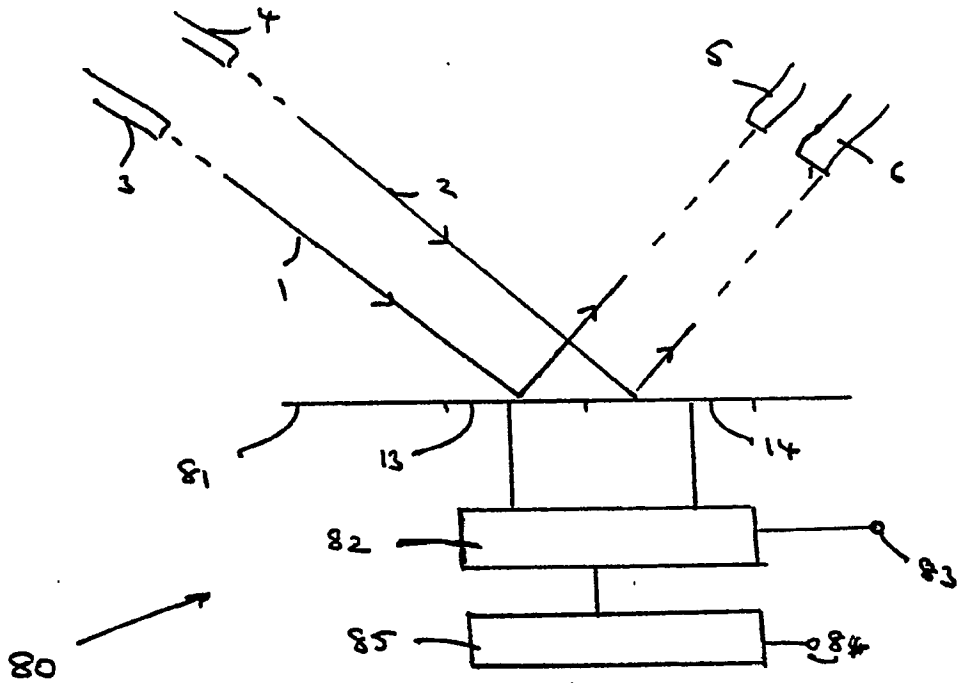

Fig 7

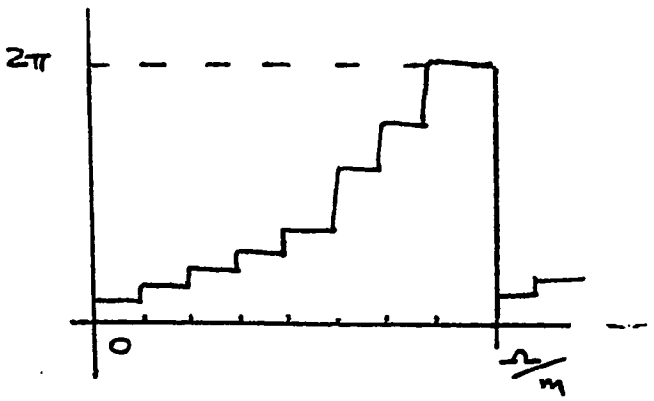

FIG 8a

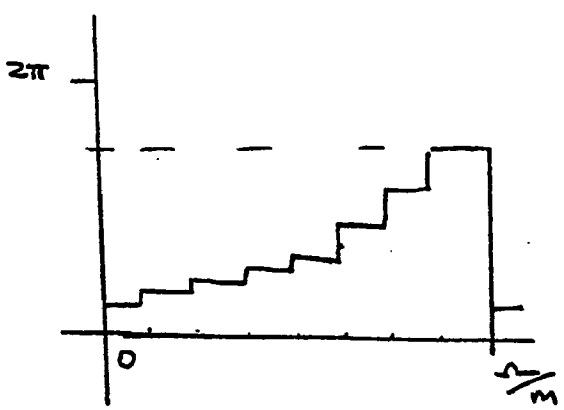

FIG 8b

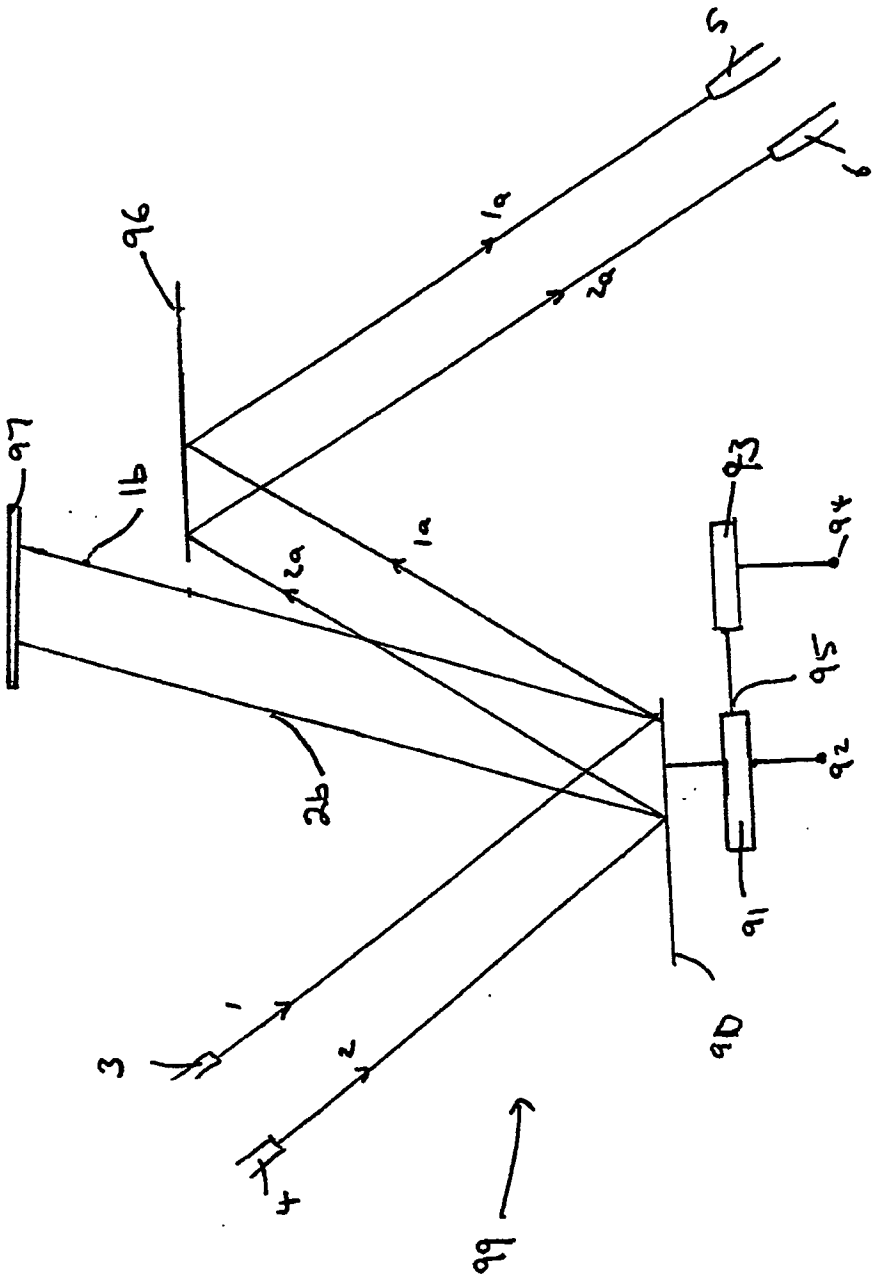

FIG 9

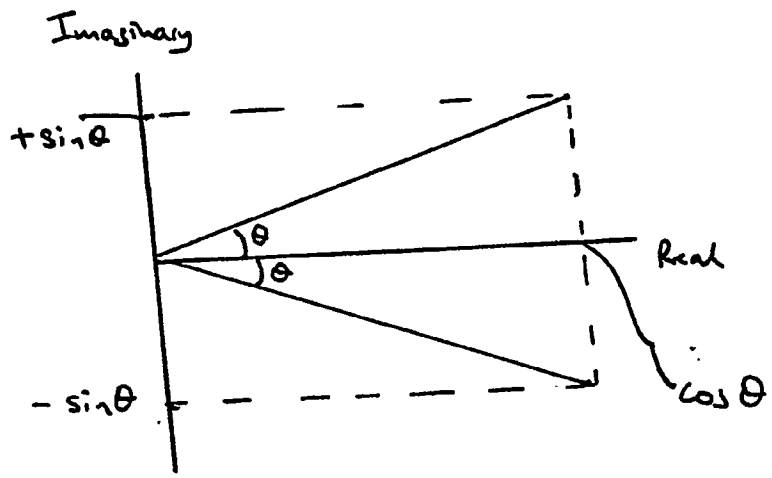

Fig 10

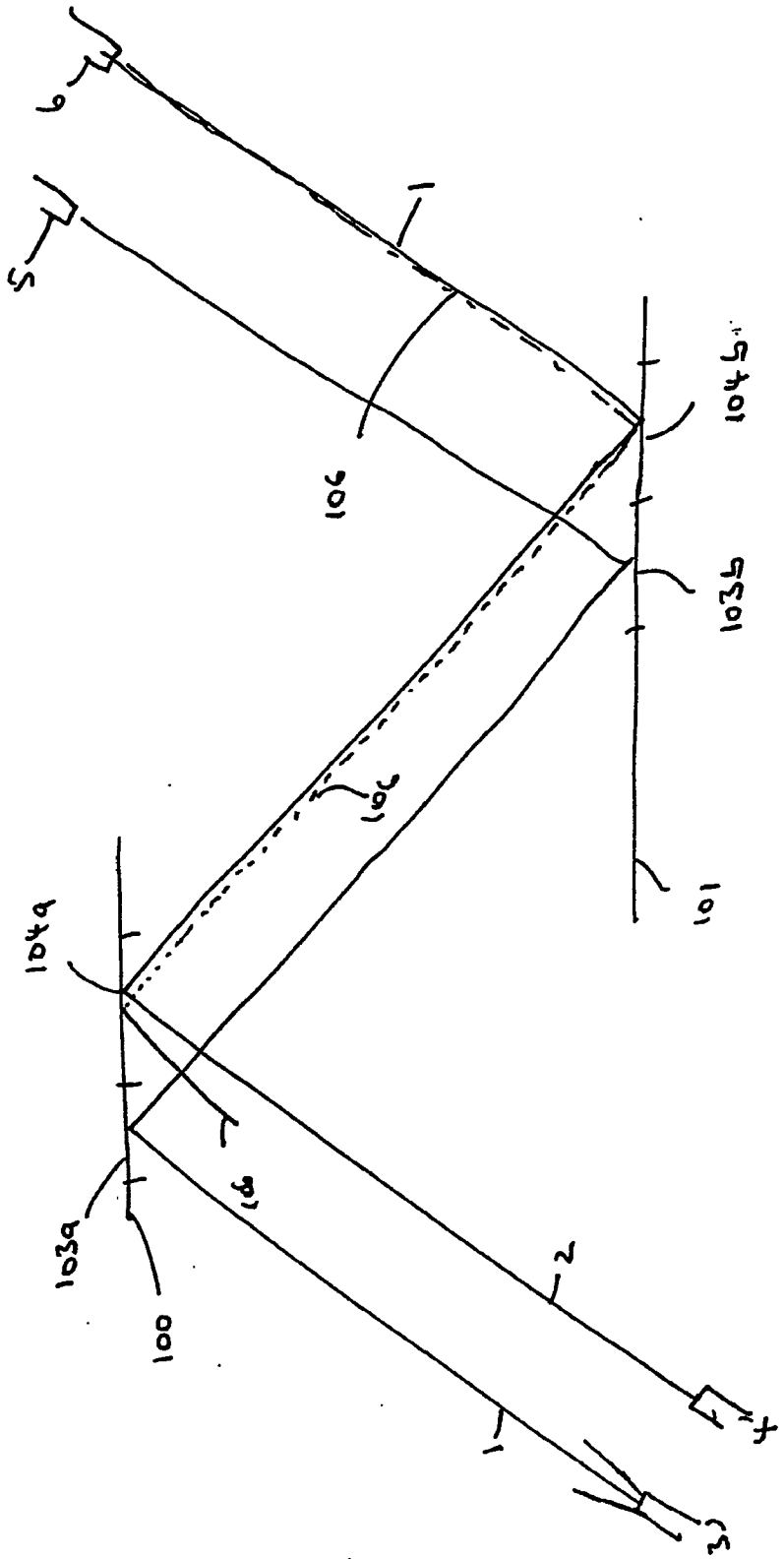

FIG 11

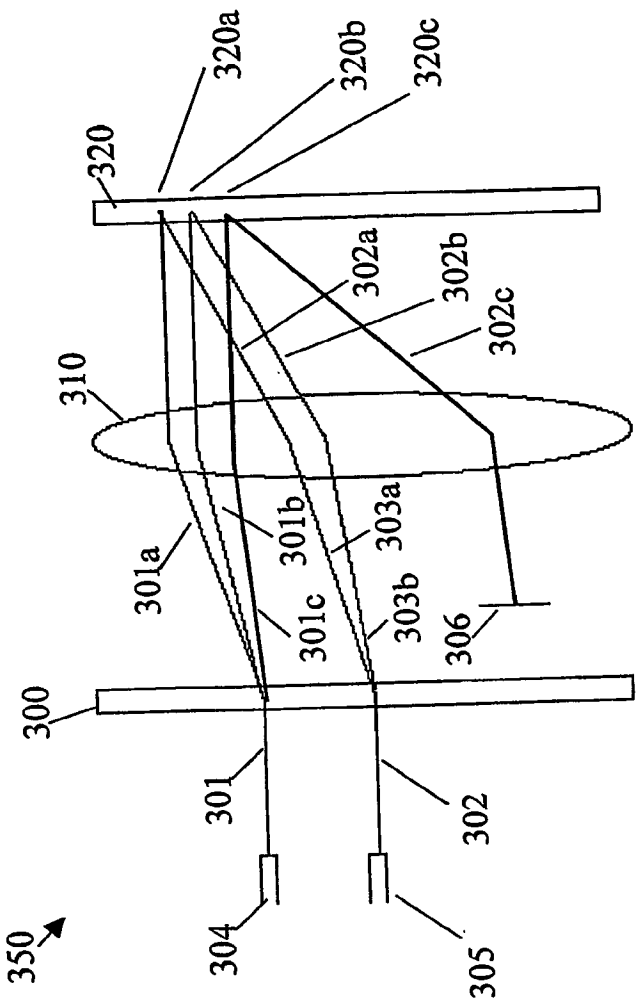
320a
320b
320c
320
302a
302b
302c
310
301a
301b
303a
301c
303b
306
300
301
302
304
305
350

Figure 12

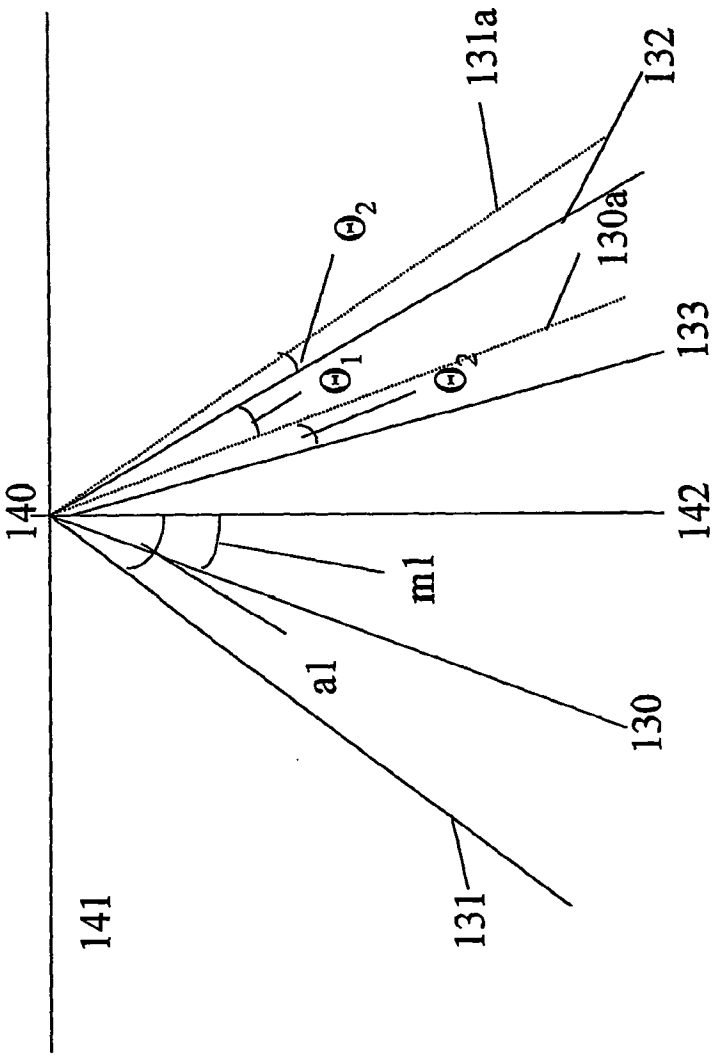
140
141
142
131
131a
132
130
130a
133
a1
m1
Θ_1
Θ_2
Θ_2

Figure 13a

Figure 13b

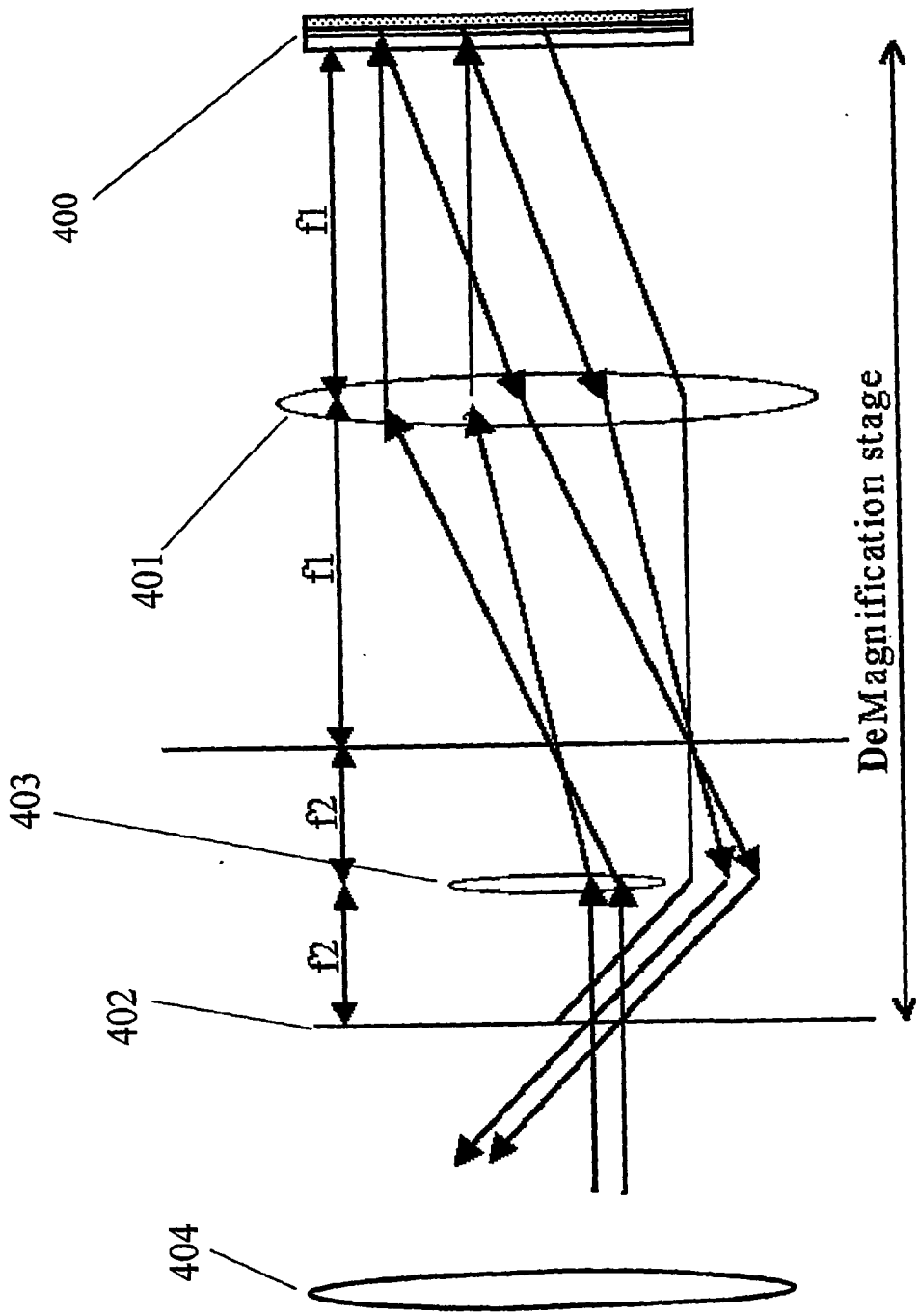

Figure 14

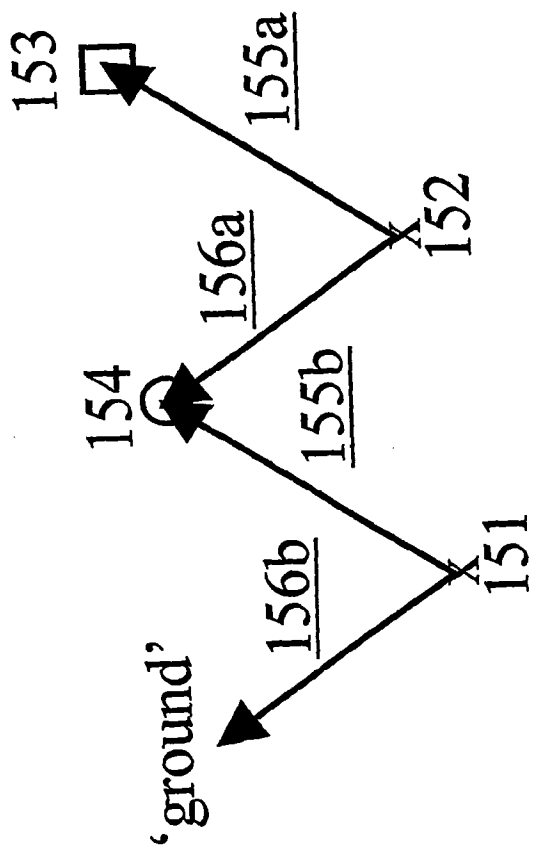

Figure 15

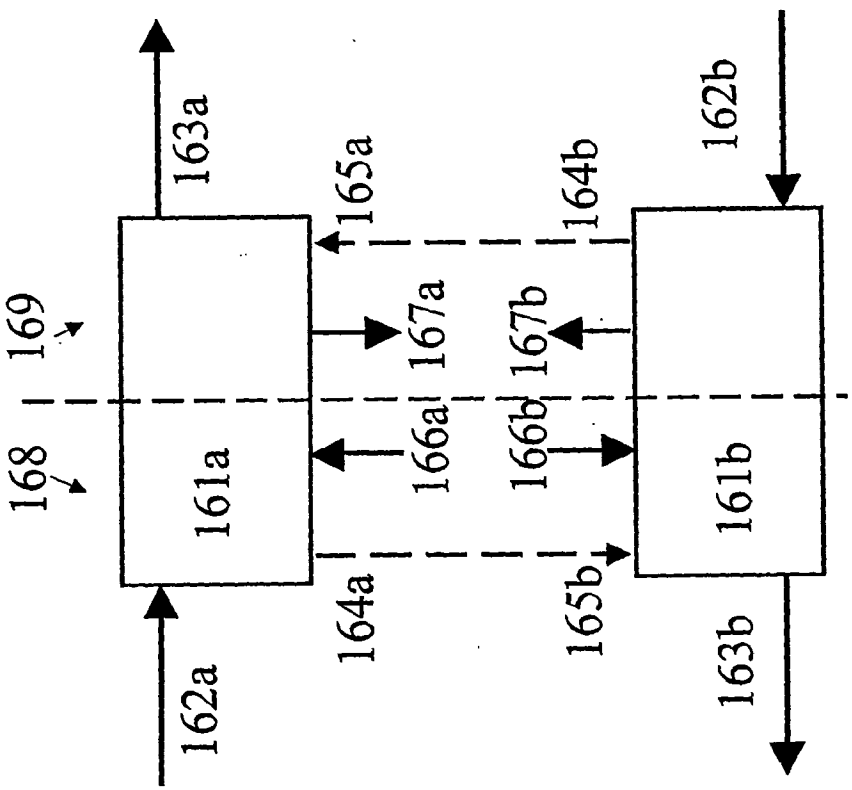
163a
165a
164b
162b
169
167a
167b
168
166a
166b
161a
161b
164a
165b
162a
163b

Figure 16

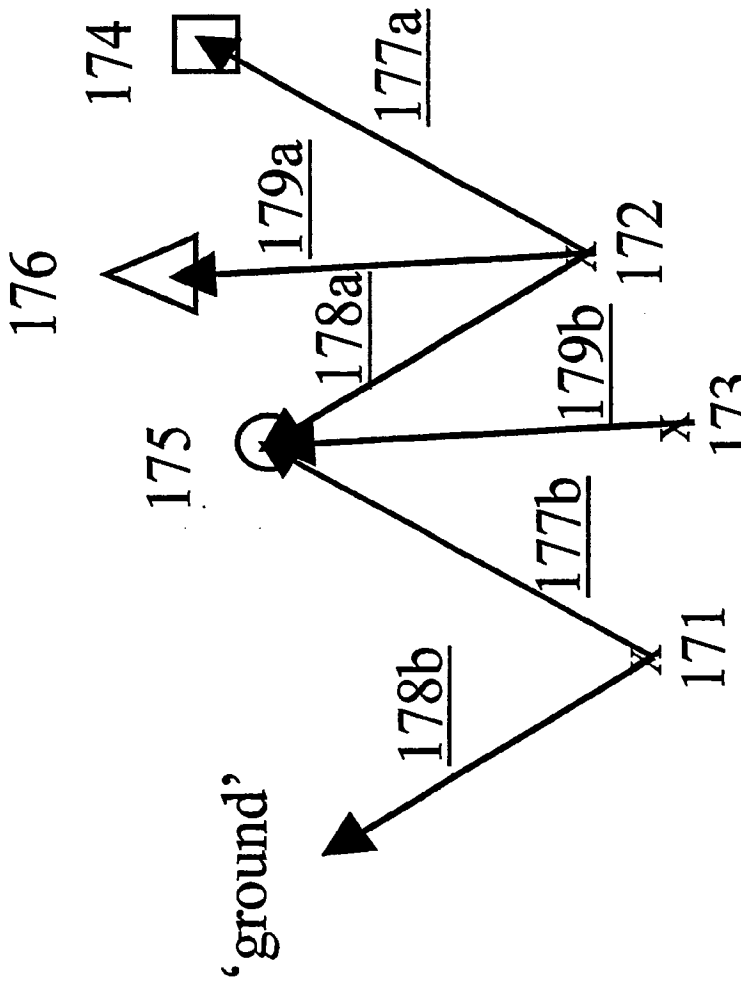

Figure 17

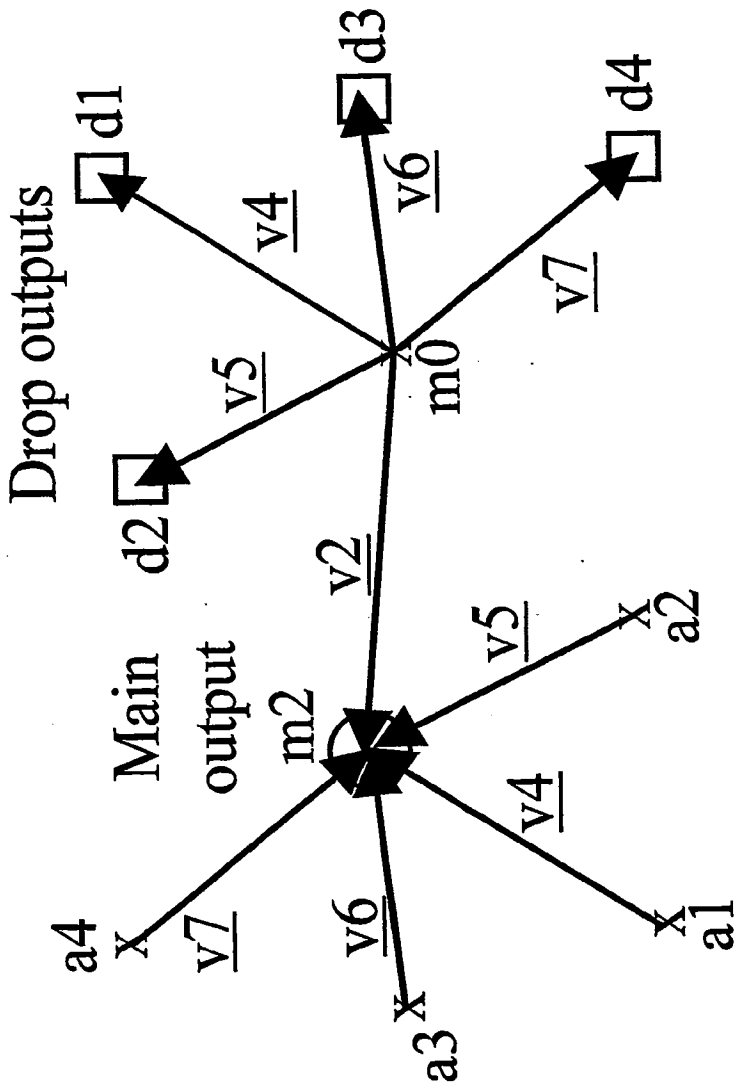
Drop outputs
d1
d2
d3
d4
v4
v5
v6
v7
m0
Main output
m2
v2
a1
a2
a3
a4
v4
v5
v6
v7

Figure 18

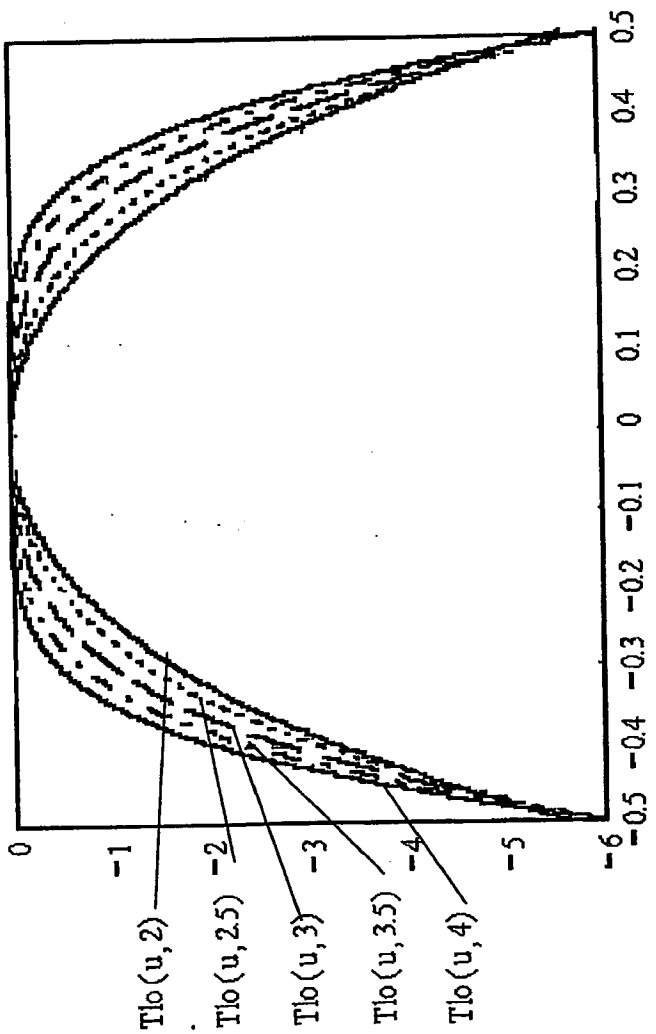
0
-1
-2
-3
-4
-5
-6
0.5
0.4
0.3
0.2
0.1
0
-0.1
-0.2
-0.3
-0.4
-0.5
u
Tlo(u, 2)
Tlo(u, 2.5)
Tlo(u, 3)
Tlo(u, 3.5)
Tlo(u, 4)

Figure 19

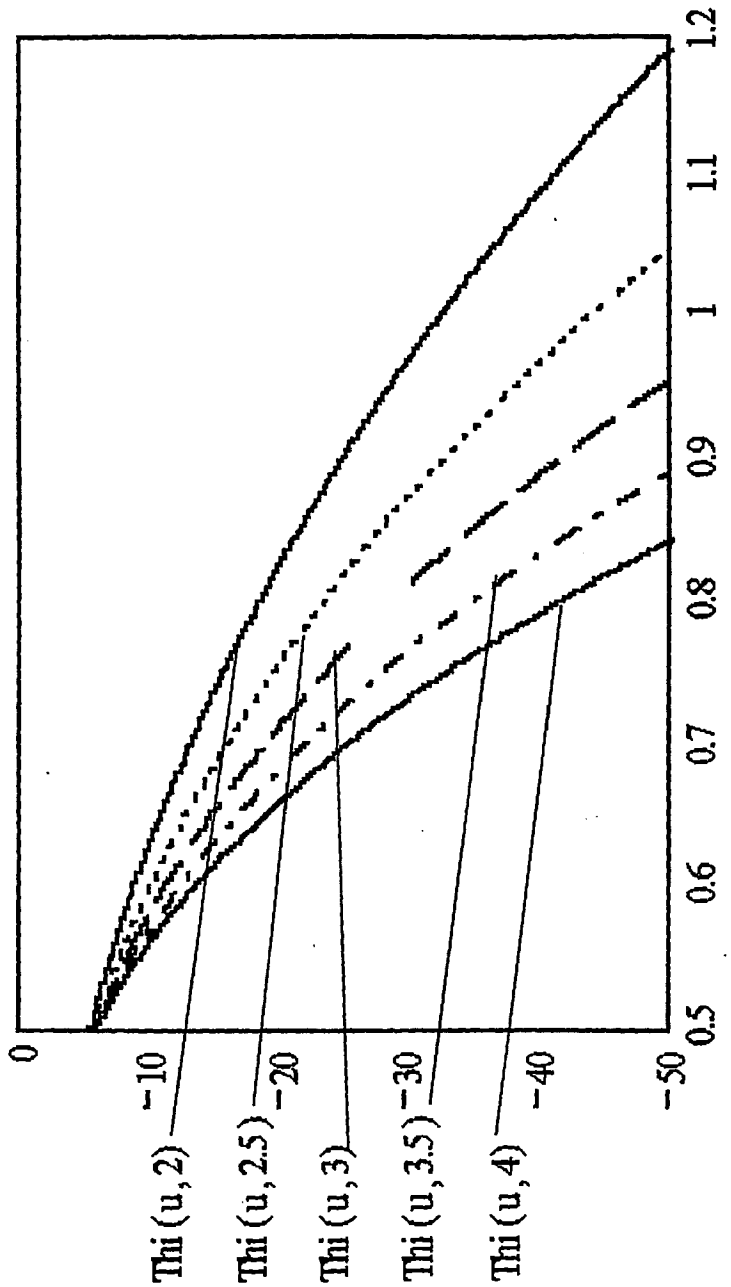
0
-10
-20
-30
-40
-50
0.5
0.6
0.7
0.8
0.9
1
1.1
1.2
u
Thi (u, 2)
Thi (u, 2.5)
Thi (u, 3)
Thi (u, 3.5)
Thi (u, 4)

Figure 20

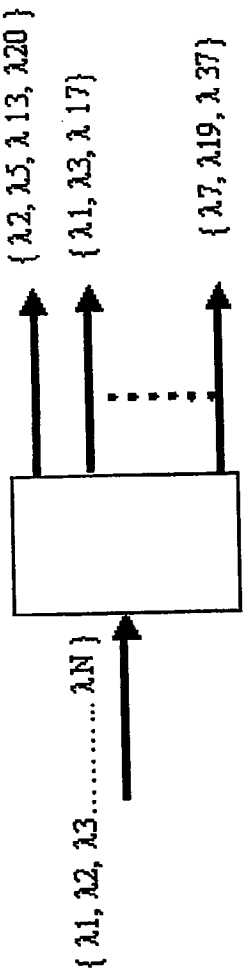

Figure 21

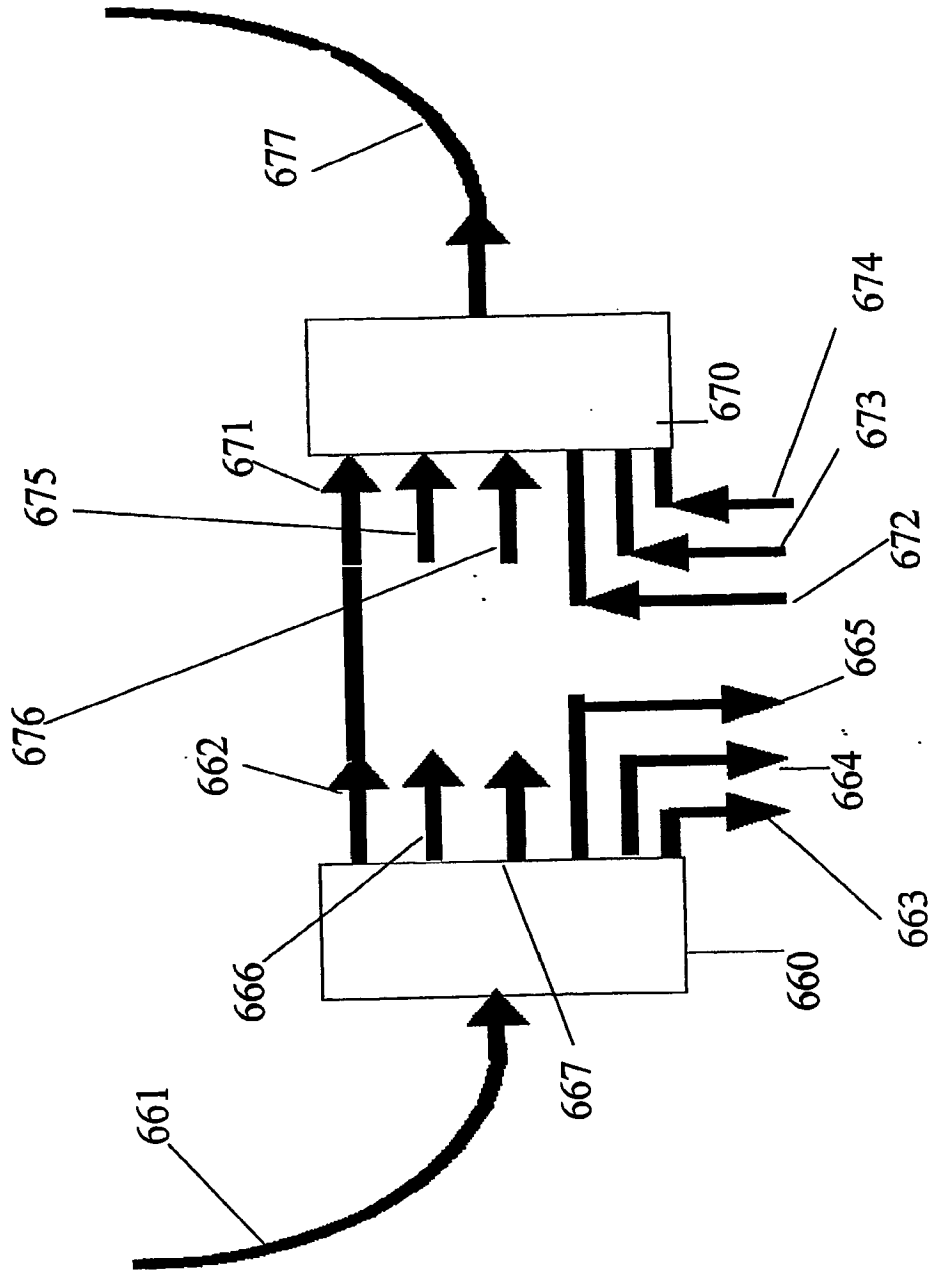

Figure 22

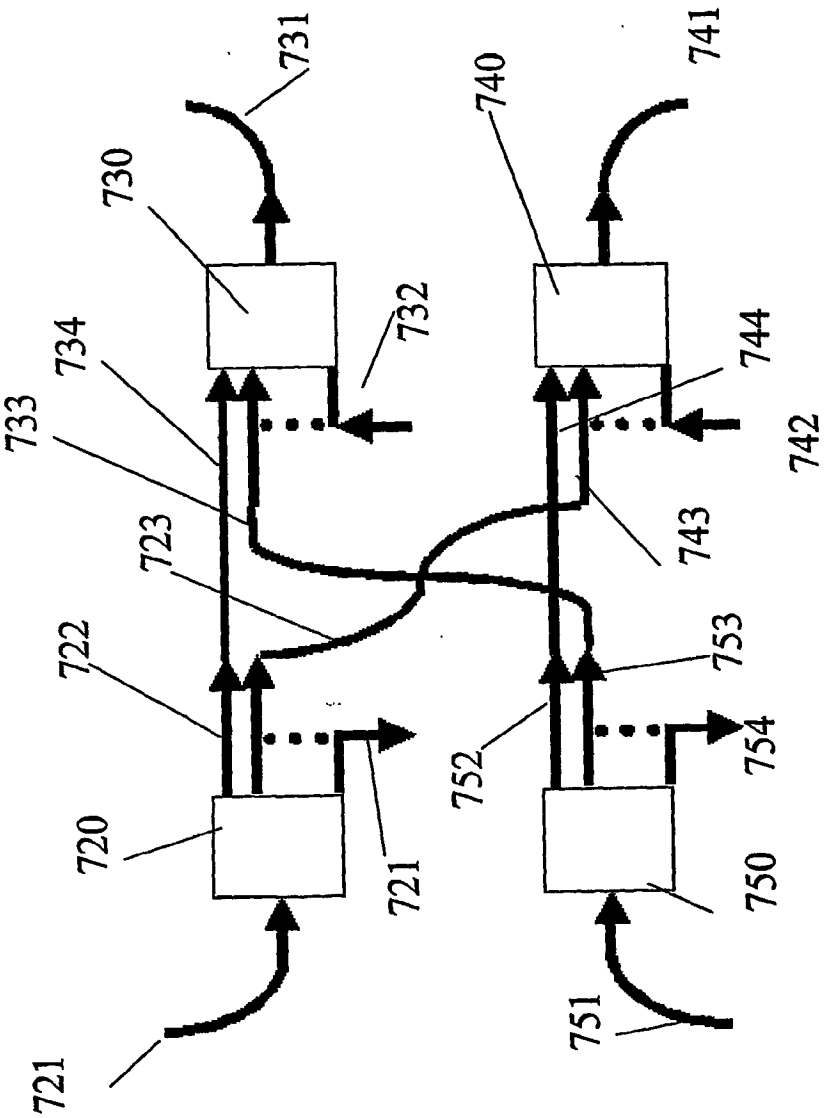
731
730
732
734
733
723
722
720
721
721
740
741
744
742
743
753
752
754
750
751

Figure 23

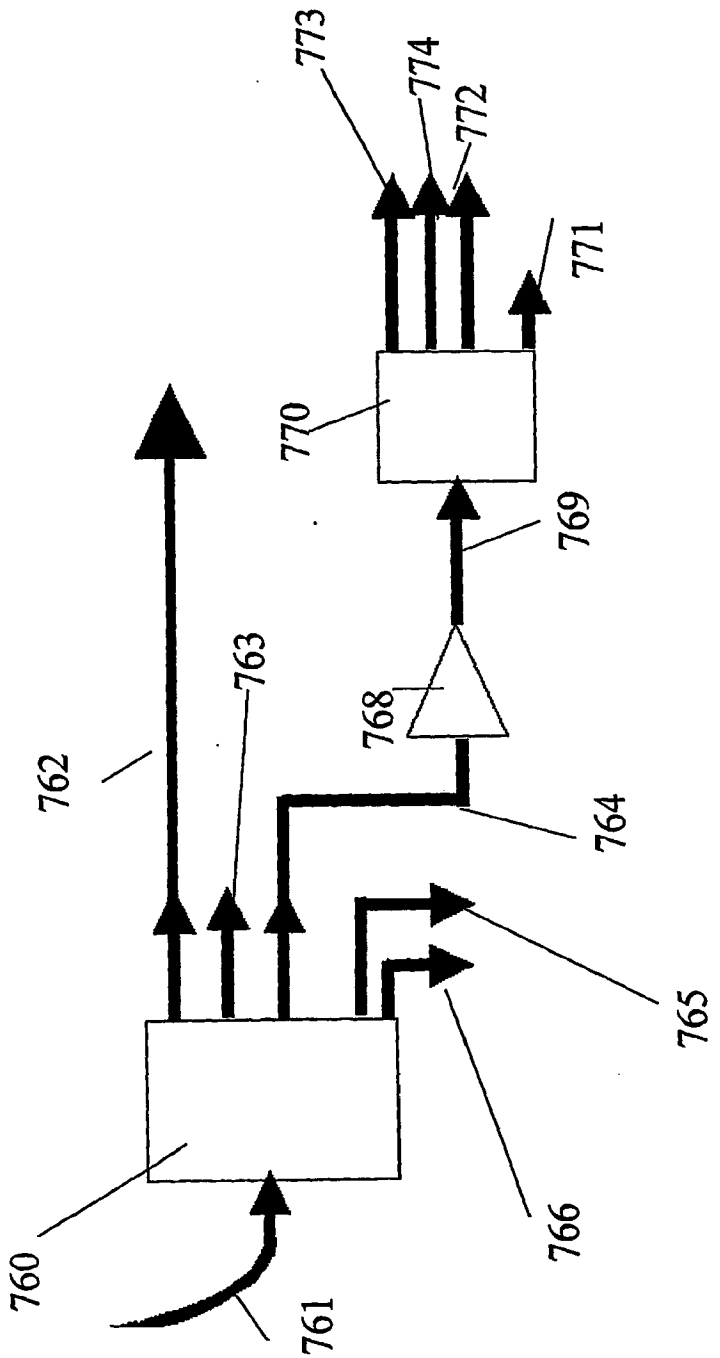

Figure 24

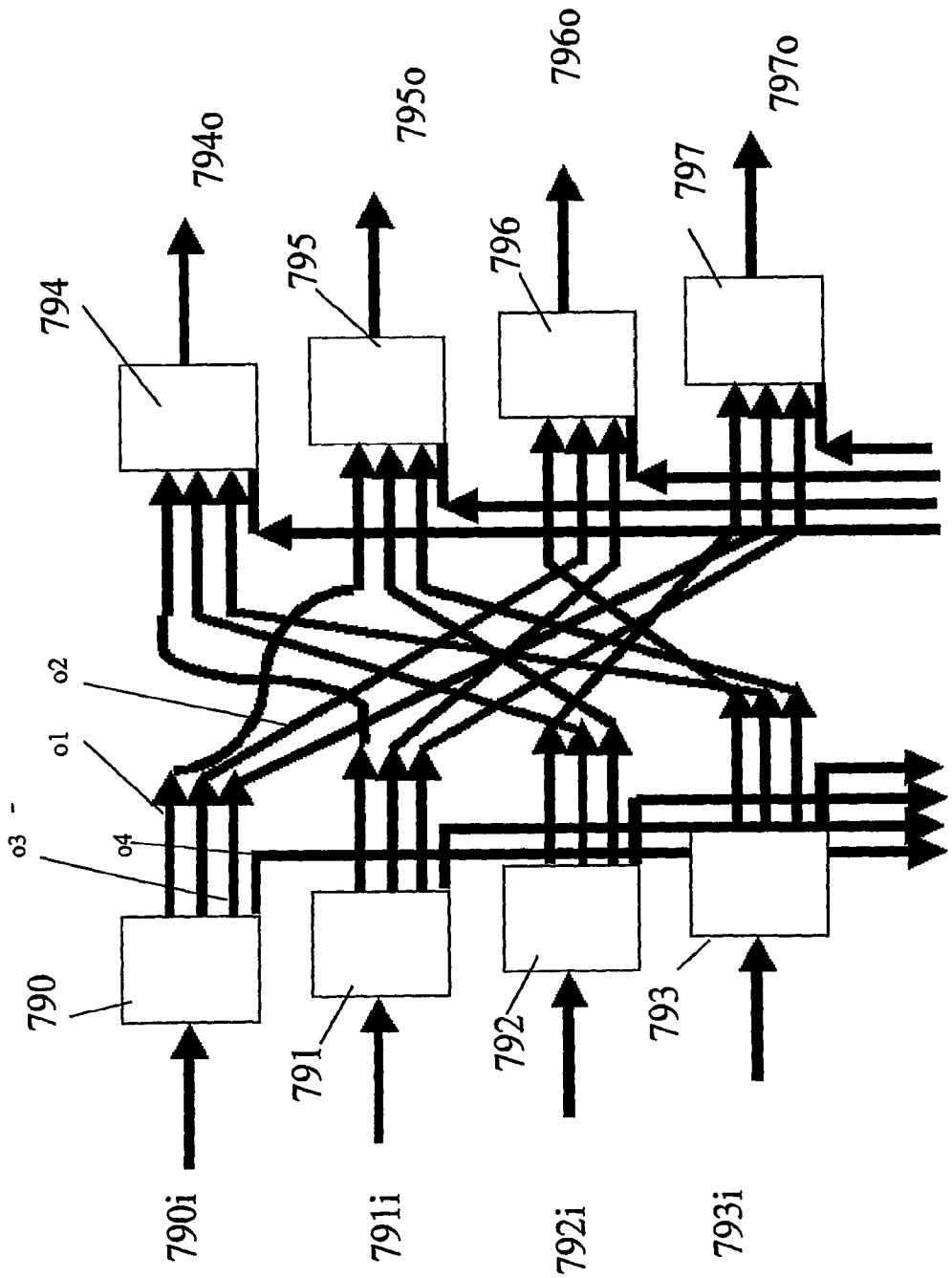
7940
7950
7960
7970
797
796
795
794
o2
o1
o3
o4
790
791
792
793
790i
791i
792i
793i

Figure 25

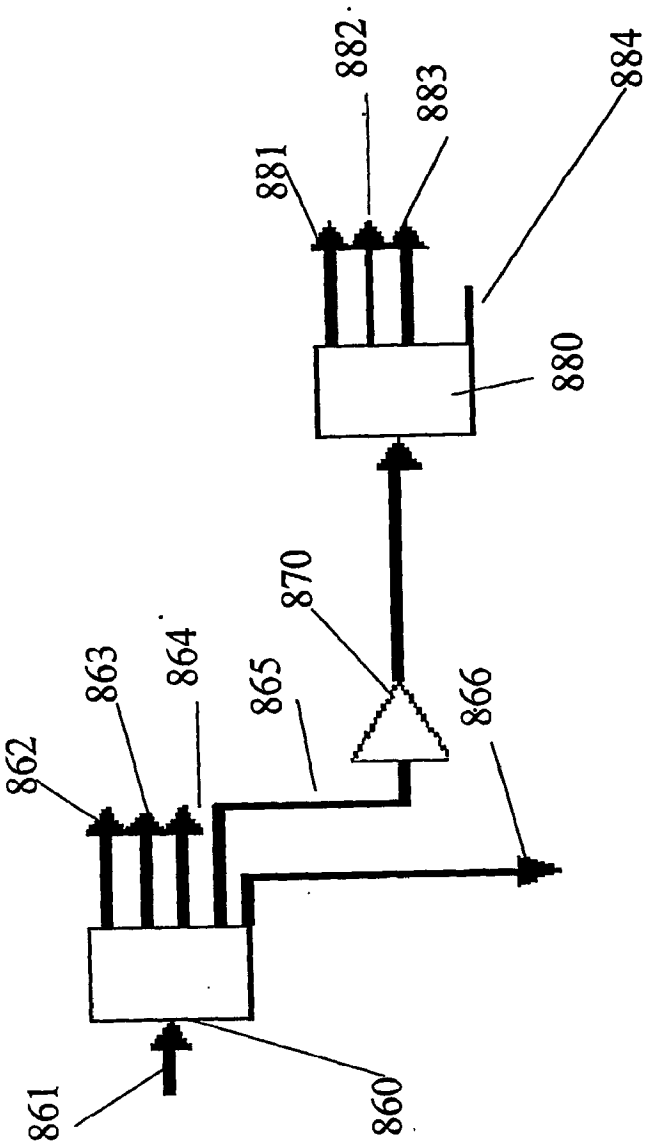

Figure 26

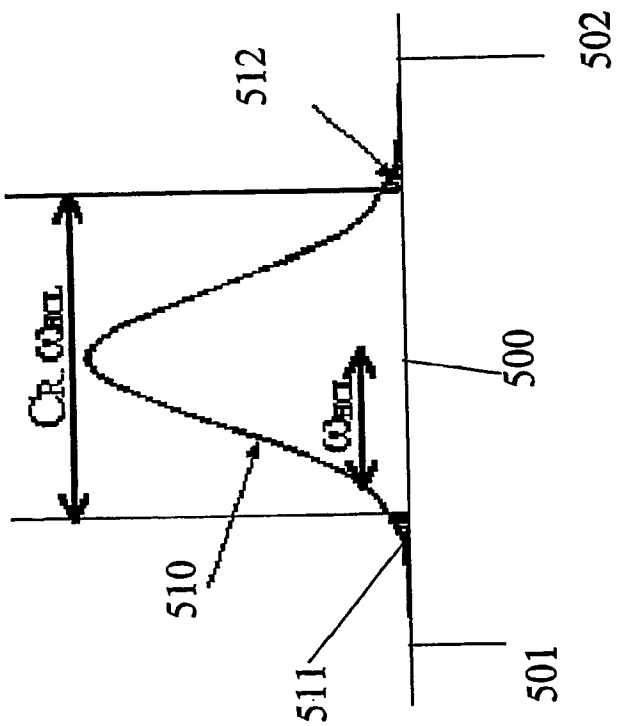

Figure 27

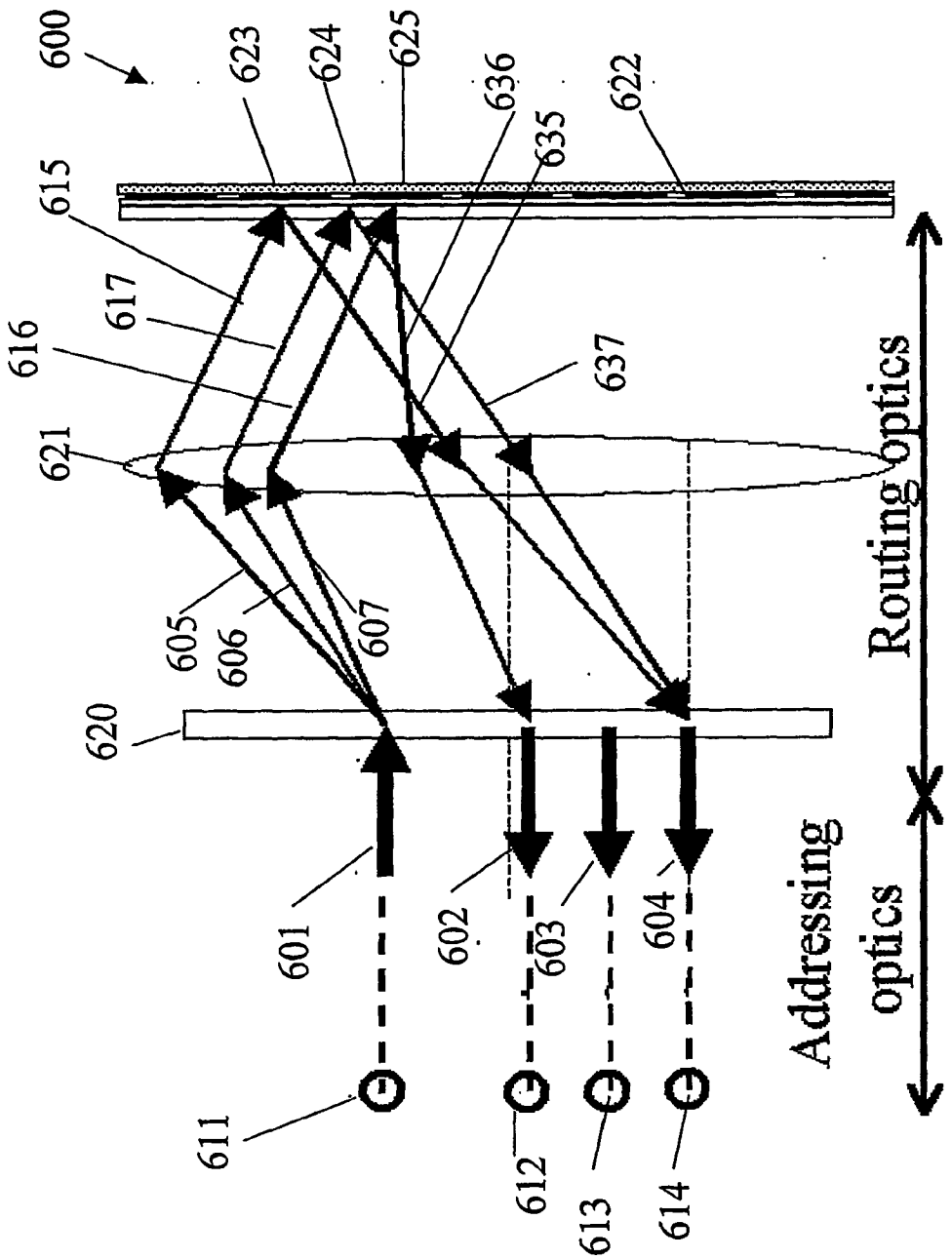
600
623
624
625
636
635
622
615
617
616
637
621
605
606
607
620
601
602
603
604
611
612
613
614
Routing optics
Addressing optics

Figure 28

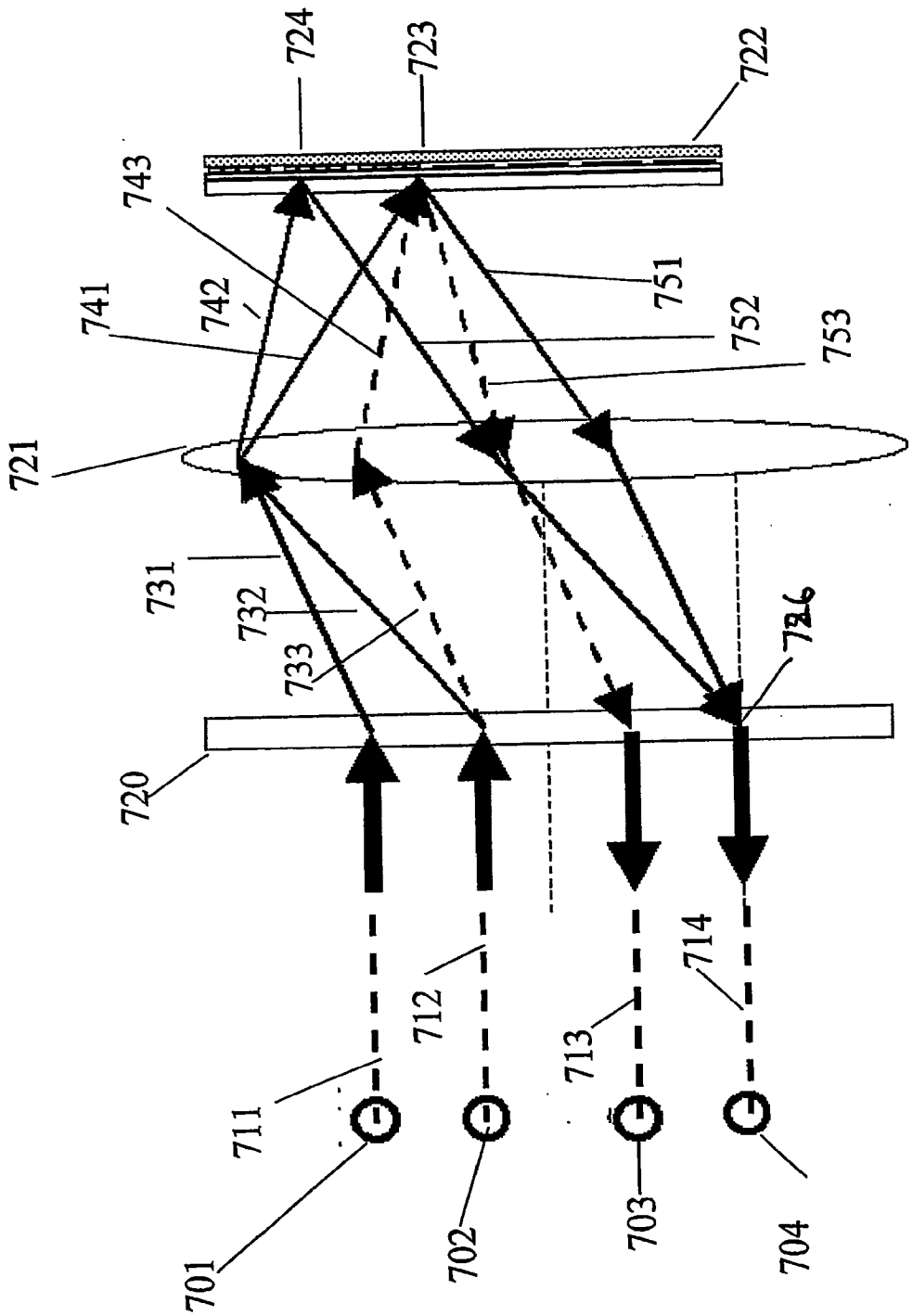
724
723
722
743
741
742
751
752
753
721
731
732
733
726
720
711
712
713
714
701
702
703
704

Figure 29

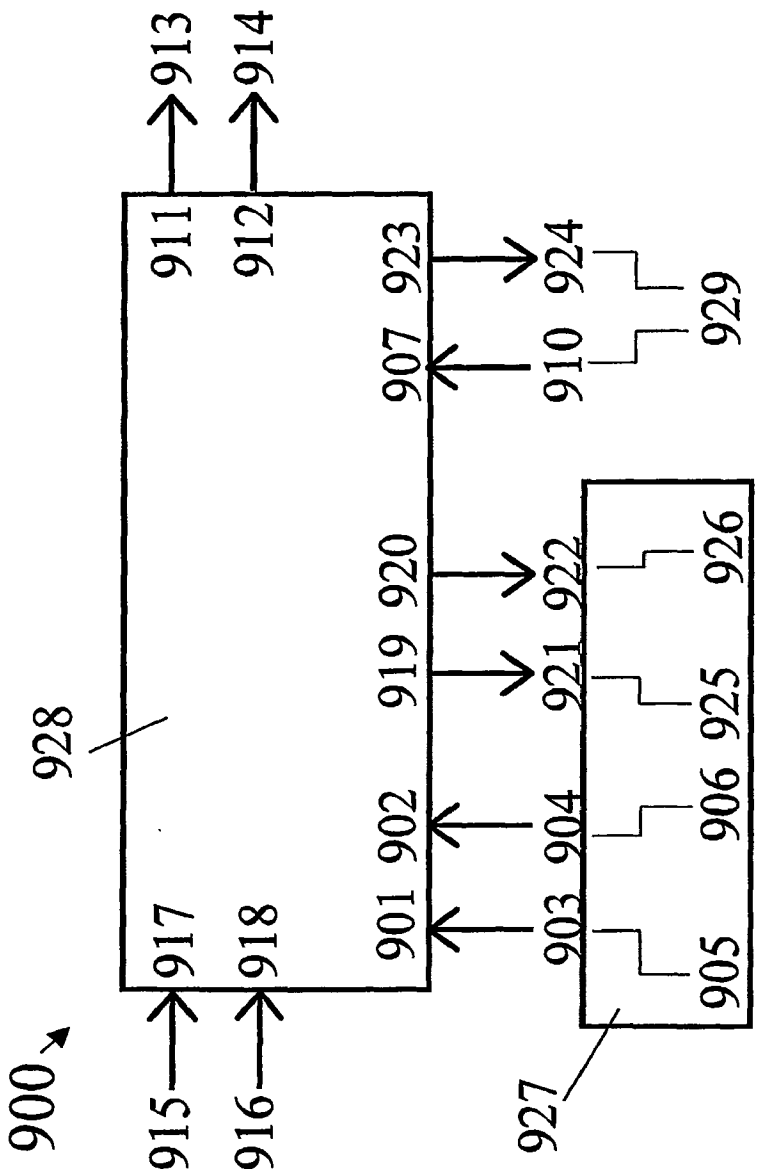
900
915
916
917
918
928
901
902
903
904
905
906
907
910
911
912
913
914
919
920
921
922
923
924
925
926
927
929

Figure 30

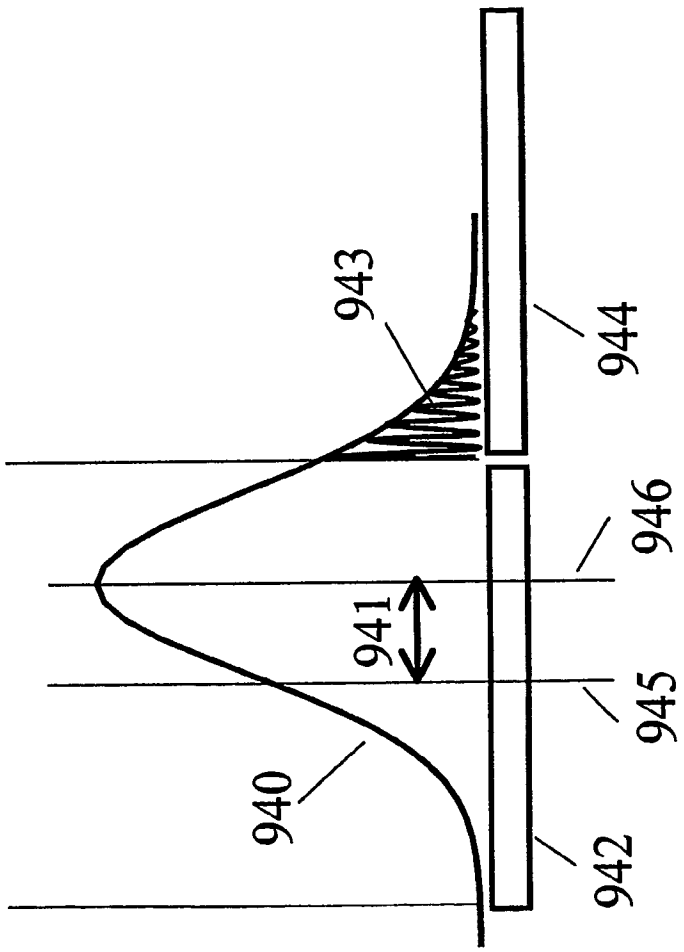

Figure 31

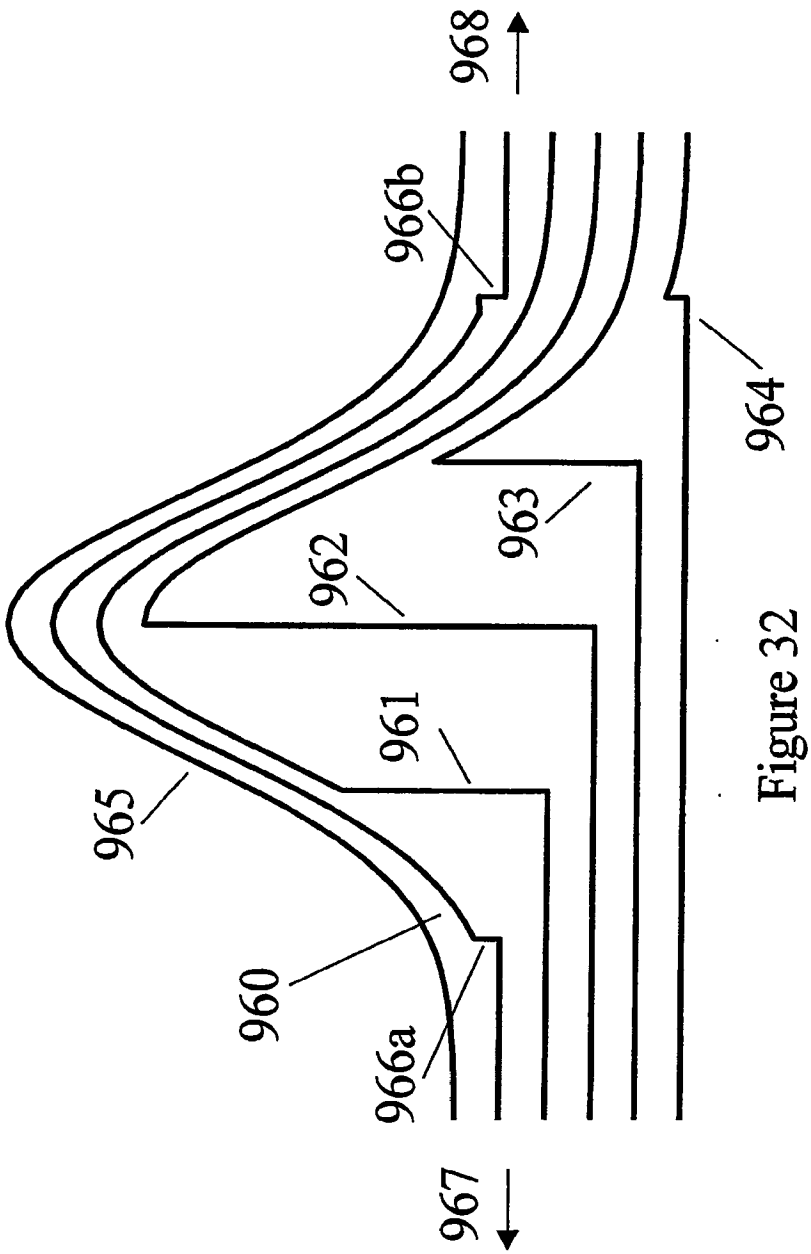

Figure 32

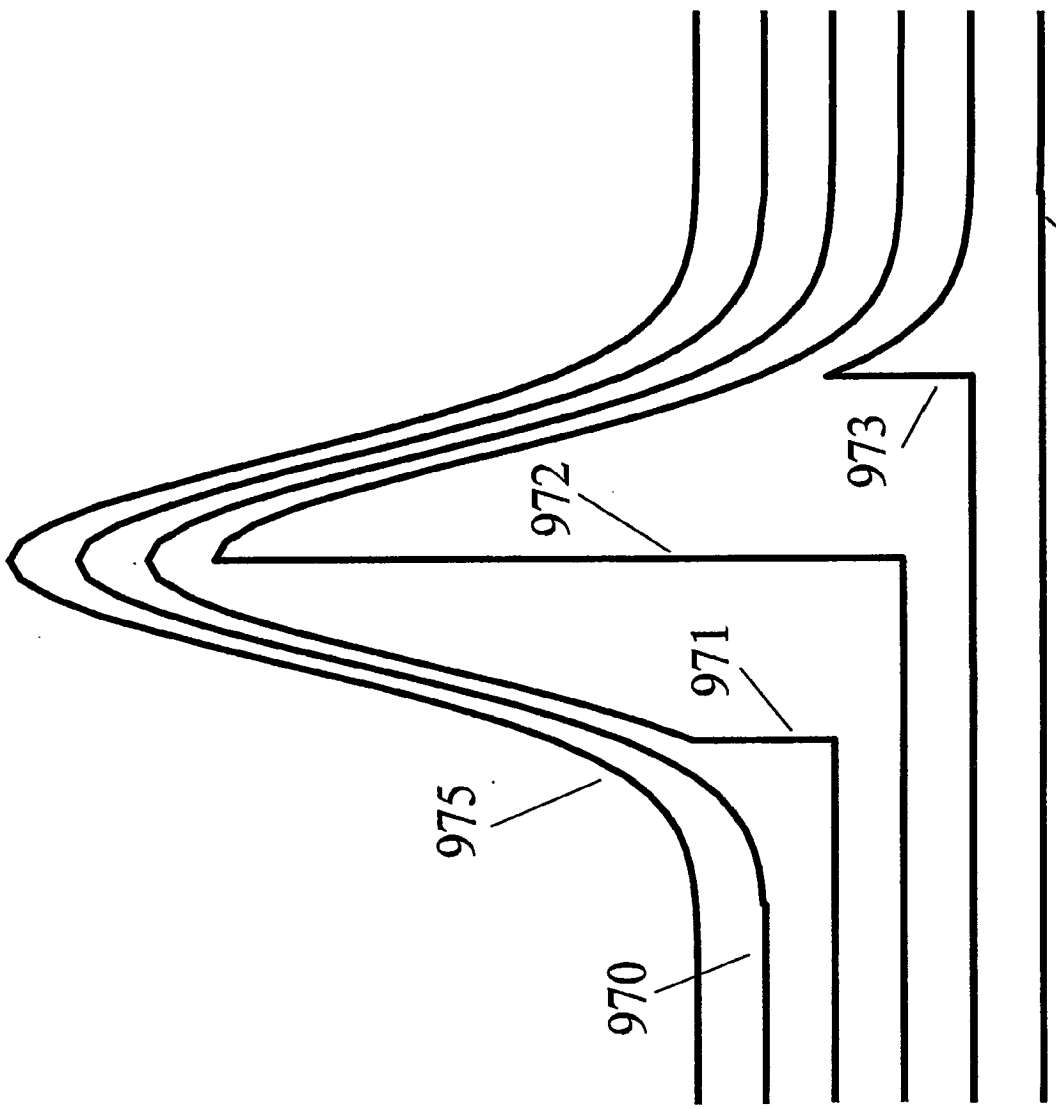

Figure 33

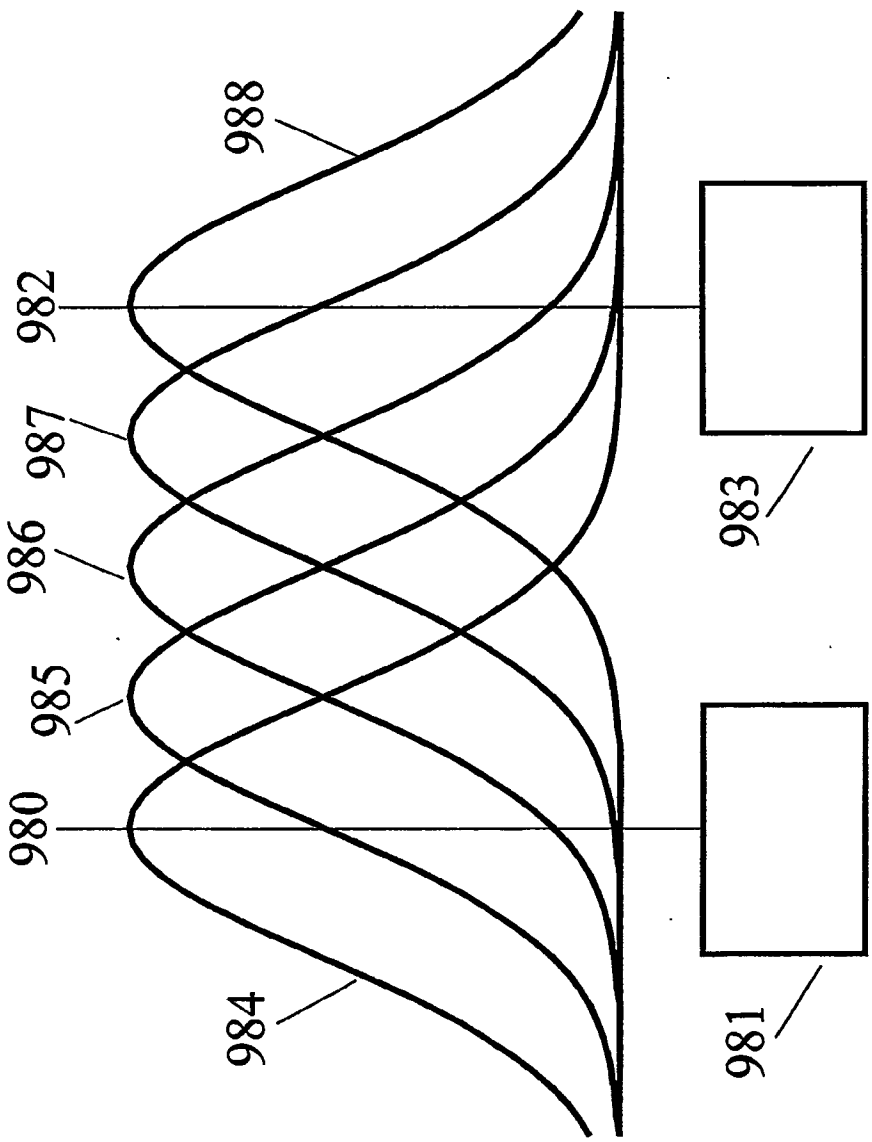

Figure 34

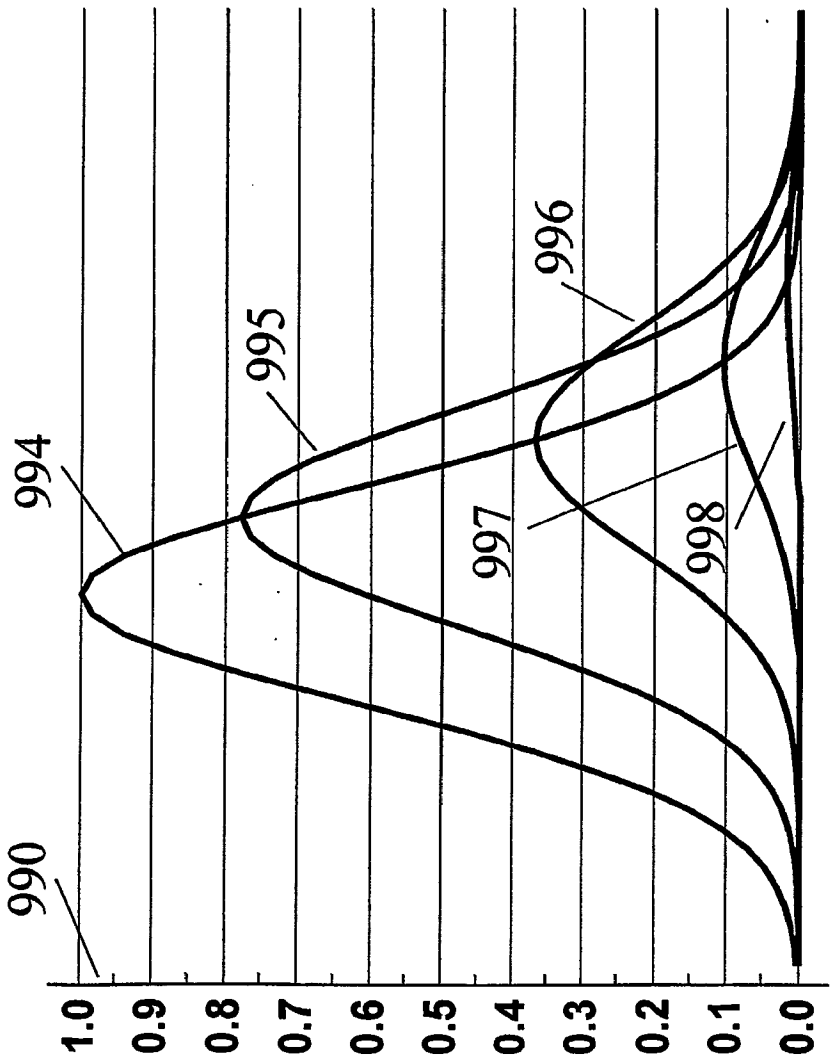

Figure 35

@PFDesktop\::ODMA/MHODMA/HBSR[illegible]anage;476115;1
TJM/jk
05/26/04

DT07 Rec'd PCT/PTO 26 MAY 2004

IN THE UNITED STATES RECEIVING OFFICE (RO/US)

Applicant: Melanie Holmes

U.S. Application No.: 10/487,810

U.S. National Stage of:
International Application No.: PCT/GB02/04011

International Filing Date: September 2, 2002

For: OPTICAL PROCESSING

Date: 5/26/04

EXPRESS MAIL LABEL NO. EV 214955167 US

ASSERTION OF SMALL ENTITY STATUS
REQUEST FOR REIMBURSEMENT

Mail Stop PCT (DO/EO)
Commissioner for Patents
P.O. Box 1450
Alexandria, VA 22313-1450

Sir:

Small Entity status is hereby asserted for the subject application.

Applicant's attorney respectfully requests a reimbursement of $962, one-half the filing fees paid on February 26, 2004, to be deposited in Deposit Account No. 08-0380. This request is made within the three-month period allowed for such reimbursement.

A copy of this letter is enclosed for accounting purposes.

Respectfully submitted,

HAMILTON, BROOK, SMITH & REYNOLDS, P.C.

By _____
Timothy J. Meagher
Registration No. 39,302
Telephone (978) 341-0036
Facsimile (978) 341-0136

Concord, Massachusetts 01742-9133
Date: 5/26/04

#4

UNITED STATES PATENT AND TRADEMARK OFFICE

UNITED STATES DEPARTMENT OF COMMERCE
United States Patent and Trademark Office
Address: COMMISSIONER FOR PATENTS
P.O. Box 1450
Alexandria, Virginia 22313-1450
www.uspto.gov

U.S. APPLICATION NUMBER NO.	FIRST NAMED APPLICANT	ATTY. DOCKET NO.
10/487,810	Melanie Holmes	3274.1003-000

INTERNATIONAL APPLICATION NO.	
PCT/GB02/04011	
I.A. FILING DATE	PRIORITY DATE
09/02/2002	09/03/2001

021005
HAMILTON, BROOK, SMITH & REYNOLDS, P.C.
530 VIRGINIA ROAD
P.O. BOX 9133
CONCORD, MA 01742-9133

CONFIRMATION NO. 3616

371 FORMALITIES LETTER

OC000000013196824

Date Mailed: 07/12/2004

NOTIFICATION OF MISSING REQUIREMENTS UNDER 35 U.S.C. 371 IN THE UNITED STATES DESIGNATED/ELECTED OFFICE (DO/EO/US)

The following items have been submitted by the applicant or the IB to the United States Patent and Trademark Office as a Designated / Elected Office (37 CFR 1.495).

- Copy of the International Application filed on 02/26/2004
- Copy of the International Search Report filed on 02/26/2004
- Copy of references cited in ISR filed on 02/26/2004
- U.S. Basic National Fees filed on 02/26/2004
- Priority Documents filed on 02/26/2004

The following items **MUST** be furnished within the period set forth below in order to complete the requirements for acceptance under 35 U.S.C. 371:

- Oath or declaration of the inventors, in compliance with 37 CFR 1.497(a) and (b), identifying the application by the International application number and international filing date.

- **$130** Surcharge for providing the oath or declaration later than 30 months from the priority date (37 CFR 1.492(e)) is required.

SUMMARY OF FEES DUE:

Total additional fees required for this application is **$130** for a Large Entity:

- **$130** Late oath or declaration Surcharge.

ALL OF THE ITEMS SET FORTH ABOVE MUST BE SUBMITTED WITHIN TWO (2) MONTHS FROM THE DATE OF THIS NOTICE OR BY 32 MONTHS FROM THE PRIORITY DATE FOR THE APPLICATION, WHICHEVER IS LATER. FAILURE TO PROPERLY RESPOND WILL RESULT IN ABANDONMENT.

The time period set above may be extended by filing a petition and fee for extension of time under the provisions

of 37 CFR 1.136(a).

Applicant is reminded that any communications to the United States Patent and Trademark Office must be mailed to the address given in the heading and include the U.S. application no. shown above (37 CFR 1.5)

*A copy of this notice **MUST** be returned with the response.*

PATRICIA A BOOKER

Telephone: (703) 305-3738

PART 2 - OFFICE COPY

U.S. APPLICATION NUMBER NO.	INTERNATIONAL APPLICATION NO.	ATTY. DOCKET NO.
10/487,810	PCT/GB02/04011	3274.1003-000

FORM PCT/DO/EO/905 (371 Formalities Notice)

IN THE UNITED STATES RECEIVING OFFICE (US/DO/EO)

Applicant: Melanie Holmes

U.S. Application No.: 10/487,810

U.S. National Stage of:
International Application No.: PCT/GB02/04011

International Filing Date: September 2, 2002

For: OPTICAL PROCESSING

Date: 9/10/04

EXPRESS MAIL LABEL NO. EV 214 953 387 US

REPLY TO NOTIFICATION OF MISSING REQUIREMENTS

Mail Stop PCT (DO/EO)
Commissioner for Patents
P.O. Box 1450
Alexandria, VA 22313-1450

Sir:

In reply to the Notification of Missing Requirements (Form PCT/DO/EO/905) dated July 12, 2004, the following documents and fees are being submitted for filing in the captioned application:

[X] **EXECUTED DECLARATION FOR PATENT APPLICATION** - A copy of the Notification is attached.
(Separate transmittal letter and postcard not required)

[X] **POWER OF ATTORNEY DOCUMENT**
[ ] **GRANTED BY INVENTOR(S)**
[X] **GRANTED BY ASSIGNEE, including Statement under 37 C.F.R. 3.73(b)**
(Separate transmittal letter and postcard not required)

[X] **SURCHARGE** - A surcharge as provided by 37 C.F.R. 1.16(e) in the amount of $65 is included in the enclosed check.
(Separate transmittal letter and postcard not required)

[ ] **SEQUENCE LISTING** - Filed concurrently and is attached.
(Separate transmittal letter and postcard required)

[ ] **PETITION FOR EXTENSION OF TIME**

[ ] Applicant hereby petitions to extend the time to respond to the Notification of Missing Requirements dated [ ] for [ ] month(s) from [ ] to [ ]. The appropriate fee of $[ ] is included in the enclosed check.

[ ] A [ ] month extension of time to respond to the Notification of Missing Requirements dated [ ] was filed on [ ] with payment of a $[ ] fee.

[ ] Applicant hereby petitions for an additional [ ] month extension of time to respond to the Notification of Missing Requirements. The appropriate fee of $[ ] is included in the enclosed check.

(Separate Petition for Extension of Time and postcard not required)

[ ] **REQUEST FOR CORRECTED FILING RECEIPT** - Filed concurrently and is attached.

(Separate transmittal letter and postcard required)

[X] **SMALL ENTITY STATEMENT**

[ ] Was filed on [ ].

[X] Is enclosed herewith. Assertion of Small Entity Status & Request for Reimbursement was filed on May 26, 2004.

(Separate transmittal letter and postcard not required)

[ ] In view of the small entity status of the captioned application, we hereby request a reimbursement of 50% of the filing fees in the amount of $[ ] which were paid on [ ] to be deposited in Deposit Account No. 08-0380.

The fees required for filing the indicated documents are enclosed in the form of a check in the total amount of $65. Authorization is hereby granted to charge any additional fees due to Deposit Account No. 08-0380. A copy of this letter is enclosed for accounting purposes.

09/16/2004 GFREY1 00000055 10487810
01 FC:2617 65.00 OP

Respectfully submitted,

HAMILTON, BROOK, SMITH & REYNOLDS, P.C.

By _____
Timothy J. Meagher
Registration No.: 39,302
Telephone (978) 341-0036
Facsimile (978) 341-0136

Concord, Massachusetts 01742-9133
Date: 9/16/04

DOCKETED
NML

UNITED STATES PATENT AND TRADEMARK OFFICE

UNITED STATES DEPARTMENT OF COMMERCE
United States Patent and Trademark Office
Address: COMMISSIONER FOR PATENTS
P.O. Box 1450
Alexandria, Virginia 22313-1450
www.uspto.gov

U.S. APPLICATION NUMBER NO.	FIRST NAMED APPLICANT	ATTY. DOCKET NO.
10/487,810	Melanie Holmes	3274.1003-000

INTERNATIONAL APPLICATION NO.	
PCT/GB02/04011	
I.A. FILING DATE	PRIORITY DATE
09/02/2002	09/03/2001

021005
HAMILTON, BROOK, SMITH & REYNOLDS, P.C.
530 VIRGINIA ROAD
P.O. BOX 9133
CONCORD, MA 01742-9133

RECEIVED
JUL 20 2004
HAMILTON, BROOK, SMITH & REYNOLDS, P.C.

CONFIRMATION NO. 3616

371 FORMALITIES LETTER

OC000000013196824

Date Mailed: 07/12/2004

NOTIFICATION OF MISSING REQUIREMENTS UNDER 35 U.S.C. 371 IN THE UNITED STATES DESIGNATED/ELECTED OFFICE (DO/EO/US)

The following items have been submitted by the applicant or the IB to the United States Patent and Trademark Office as a Designated / Elected Office (37 CFR 1.495).

- Copy of the International Application filed on 02/26/2004
- Copy of the International Search Report filed on 02/26/2004
- Copy of references cited in ISR filed on 02/26/2004
- U.S. Basic National Fees filed on 02/26/2004
- Priority Documents filed on 02/26/2004

The following items **MUST** be furnished within the period set forth below in order to complete the requirements for acceptance under 35 U.S.C. 371:

- Oath or declaration of the inventors, in compliance with 37 CFR 1.497(a) and (b), identifying the application by the International application number and international filing date.
- **$130** Surcharge for providing the oath or declaration later than 30 months from the priority date (37 CFR 1.492(e)) is required.

SUMMARY OF FEES DUE:

Total additional fees required for this application is **$130** for a Large Entity:

- **$130** Late oath or declaration Surcharge.

ALL OF THE ITEMS SET FORTH ABOVE MUST BE SUBMITTED WITHIN TWO (2) MONTHS FROM THE DATE OF THIS NOTICE OR BY 32 MONTHS FROM THE PRIORITY DATE FOR THE APPLICATION, WHICHEVER IS LATER. FAILURE TO PROPERLY RESPOND WILL RESULT IN ABANDONMENT.

The time period set above may be extended by filing a petition and fee for extension of time under the provisions

of 37 CFR 1.136(a).

Applicant is reminded that any communications to the United States Patent and Trademark Office must be mailed to the address given in the heading and include the U.S. application no. shown above (37 CFR 1.5)

*A copy of this notice **MUST** be returned with the response.*

PATRICIA A BOOKER

Telephone: (703) 305-3738

PART 1 - ATTORNEY/APPLICANT COPY

U.S. APPLICATION NUMBER NO.	INTERNATIONAL APPLICATION NO.	ATTY. DOCKET NO.
10/487,810	PCT/GB02/04011	3274.1003-000

FORM PCT/DO/EO/905 (371 Formalities Notice)

UNITED STATES PATENT AND TRADEMARK OFFICE

UNITED STATES DEPARTMENT OF COMMERCE
United States Patent and Trademark Office
Address: COMMISSIONER FOR PATENTS
P.O. Box 1450
Alexandria, Virginia 22313-1450
www.uspto.gov

Bib Data Sheet

CONFIRMATION NO. 3616

SERIAL NUMBER	FILING OR 371(c) DATE	CLASS	GROUP ART UNIT	ATTORNEY DOCKET NO.
10/487,810	09/10/2004 RULE	359	2872	3274.1003-000

APPLICANTS

Melanie Holmes, Ipswich, UNITED KINGDOM;

**** CONTINUING DATA ***************************

This application is a 371 of PCT/GB02/04011 09/02/2002

**** FOREIGN APPLICATIONS *********************

UNITED KINGDOM 01213081 09/03/2001

** SMALL ENTITY **

Foreign Priority claimed	STATE OR COUNTRY	SHEETS DRAWING	TOTAL CLAIMS	INDEPENDENT CLAIMS
☐ yes ☐ no	UNITED KINGDOM	36	28	13

35 USC 119 (a-d) conditions met ☐ yes ☐ no ☐ Met after Allowance

Verified and Acknowledged _____ Examiner's Signature Initials

ADDRESS

021005

TITLE

Optical processing

FILING FEE RECEIVED	
1027	FEES: Authority has been given in Paper No. _____ to charge/credit DEPOSIT ACCOUNT No. _____ for following:

- ☐ All Fees
- ☐ 1.16 Fees (Filing)
- ☐ 1.17 Fees (Processing Ext. of time)
- ☐ 1.18 Fees (Issue)
- ☐ Other _____
- ☐ Credit

10/487810

Rec'd PCT/PTO 10 SEP 2004

DOCKET NO. 3274.1003-000

IN THE UNITED STATES PATENT AND TRADEMARK OFFICE

Declaration for Patent Application

[ ] Supplemental (37 C.F.R. §1.67)

As a named inventor, I hereby declare that:

My residence, mailing address and citizenship are as stated next to my name;

I believe I am the original, first and sole inventor (if only one name is listed) or an original, first and joint inventor (if plural names are listed in the signatory page(s) commencing at page 2 hereof) of the subject matter which is claimed and for which a patent is sought on the invention entitled

OPTICAL PROCESSING

the specification of which (check one)

[ ] is attached hereto.

[ ] was filed on [ ] as United States Application Number [ ].

[X] was filed on 2 September 2002 as PCT International Application No. PCT/GB02/04011 and assigned United States Application No. **10/487,810**.

[ ] and was amended on [ ] (if applicable).

I hereby state that I have reviewed and understand the contents of the above-identified specification, including the claims, as amended by any amendment referred to above.

I acknowledge the duty to disclose information which is material to patentability as defined in 37 C.F.R. §1.56, including for continuation-in-part applications, material information which became available between the filing date of the prior application and the national or PCT international filing date of the continuation-in-part application.

I hereby claim foreign priority benefits under 35 U.S.C. 119 or 365 of any foreign application(s) for patent or inventor's certificate, or of any PCT international application which designated at least one country other than the United States of America, listed below and have also identified below, by checking the box, any foreign application for patent or inventor's certificate, or of any PCT international application having a filing date before that of the application on which priority is claimed:

Prior Foreign Application(s)			Priority Not Claimed	Certified Copy Filed? YES	NO
0121308.1 (Number)	Great Britain (Country)	03/September/2001 (Day/Month/Year filed)	[ ]	[ ]	[X]
(Number)	(Country)	(Day/Month/Year filed)	[ ]	[ ]	[ ]

I hereby declare that all statements made herein of my own knowledge are true and that all statements made on information and belief are believed to be true; and further that these statements were made with the knowledge that willful false statements and the like so made are punishable by fine or imprisonment, or both, under Section 1001 of Title 18 of the United States Code and that such willful false statements may jeopardize the validity of the application or any patent issued thereon.

Full name of sole or first inventor: Melanie Holmes

Inventor's Signature: Melanie Holmes Date: 20.08.04

Residence: 39 Orford Street, Ipswich, IP1 3PE Great Britain

Citizenship: Great Britain

Mailing Address: Same as above

@PFDesktop\::ODMA/MHODMA/HBSR05;iManage;459016;1

10/487810

Rec'd PCT/PTO 10 SEP 2004

STATEMENT CLAIMING SMALL ENTITY STATUS
(37 CFR 1.27(a))-SMALL BUSINESS CONCERN

DOCKET NUMBER: 3274.1003-000

Applicant or Patentee: Melanie Holmes
Application or Patent No.: 10/487,810
International Filing Date: 2 September 2002
Title: Optical Processing

I hereby state that I am

[ ] the owner of the small business concern identified below:
[X] an official of the small business concern empowered to act on behalf of the concern identified below:

NAME OF SMALL BUSINESS CONCERN Thomas Swan & Co. Ltd.
ADDRESS OF SMALL BUSINESS CONCERN Crookhall, Consett, Co. Durham DH8 7ND, United Kingdom

I hereby state that the above identified small business concern qualifies as a small business concern as defined in 13 CFR Part 121 for purposes of paying reduced fees to the United States Patent and Trademark Office. Questions related to size standards for a small business concern may be directed to: Small Business Administration, Size Standards Staff, 409 Third Street, SW, Washington, DC 20416 or you may call 202-205-6618.

I hereby state that rights under contract or law have been conveyed to and remain with the small business concern identified above with regard to the invention described in:

[ ] the specification filed herewith with title as listed above.
[X] the application identified above.
[ ] the patent identified above.

If the rights held by the above identified small business concern are not exclusive, each person, concern or organization having rights in the invention must file separate statements as to their status as small entities. No rights to the invention are held by any person who would not qualify as a person under 37 CFR 1.27(a)(1), or by any concern which would not qualify as a small business concern under 37 CFR 1.27(a)(2), or a nonprofit organization under 37 CFR 1.27(a)(3).

Each additional person, concern or organization having any rights in the invention is listed below:

[X] no such person, concern, or organization exists.
[ ] each such person, concern, or organization is listed below.

Separate statements are required from each named person, concern, or organization having rights to the invention stating their status as small entities.

I acknowledge the duty to file, in this application or patent, notification of any change in status resulting in loss of entitlement to small entity status prior to paying, or at the time of paying, the earliest of the issue fee or any maintenance fee due after the date on which status as a small entity is no longer appropriate. (37 CFR 1.27(g)(2))

NAME OF PERSON SIGNING IAN BONAS
TITLE OF PERSON IF OTHER THAN OWNER DIRECTOR
ADDRESS OF PERSON SIGNING BEDBURN HALL, HAMSTERLEY, BISHOP AUCKLAND, DL 13 3NN
SIGNATURE I G Bonas DATE 2 SEPTEMBER 2004

@PFDesktop\::ODMA/MHODMA/HBSR05;iManage;459097;1

HAMILTON, BROOK, SMITH & REYNOLDS, P.C.

10/487810
Rec'd PCT/PTO 10 SEP 2004

POWER OF ATTORNEY OR AUTHORIZATION OF AGENT AND CORRESPONDENCE ADDRESS

Application Number	10/487,810
International Filing Date	2 September 2002
First Named Inventor	Melanie Holmes
Confirmation Number	
Group Art Unit	
Examiner Name	
Attorney Docket Number	3274.1003-000

Title OPTICAL PROCESSING

I/We hereby appoint

[X] the attorneys/agents associated with **Customer No. 021005**

[ ] Practitioner(s) named below:

as my/our attorneys/agents to prosecute the application identified above, including any continuation or divisional applications thereof, and to transact all business in the United States Patent and Trademark Office connected therewith.

The correspondence address for the above-identified application is:

[X] Customer Number 021005

Hamilton, Brook, Smith & Reynolds, P.C.
530 Virginia Road
P.O. Box 9133
Concord, Massachusetts 01742-9133

[ ] Other

Please direct all telephone calls and facsimiles to:

Name Timothy J. Meagher, Esq. Tel. No. 978-341-0036 Fax No. 978-341-0136

I am the:

[ ] Applicant/Inventor.

[X] Authorized representative of the Assignee, Thomas Swan & Co. Ltd., of the entire interest. See 37 C.F.R. § 3.71. A Statement under 37 C.F.R. §3.73(b) is enclosed.

[ ] Authorized representative of the Assignee, [ ], together with [ ], of the entire interest. A Statement under 37 C.F.R. § 3.73(b) is enclosed.

SIGNATURE of Applicant or Assignee of Record

Name & Title	IAN BONAS DIRECTOR
Signature	IGBon
Date	2 SEPTEMBER 2004

@PFDesktop\::ODMA/MHODMA/HBSR05;iManage;459090;1

Docket No. 3274.1003-000

STATEMENT UNDER 37 C.F.R. § 3.73(b)

Inventor(s): Melanie Holmes

Application No./Patent No.: 10/487,810 International Filing Date: 2 September 2002

For: OPTICAL PROCESSING

Thomas Swan & Co. Ltd. (Name of Assignee), a corporation (Type of Assignee, e.g., corporation, partnership, university, government agency, etc.),

states that it is

A. [X] the assignee of the entire right, title and interest in the patent application identified above; or

B. [ ] an assignee together with [ ] of the entire right, title and interest in the patent application identified above.

The right, title and interest of the above-named assignee in the patent application identified above is established by virtue of:

A. [X] An assignment from the inventor(s) of the patent application identified above. The assignment was recorded in the Patent and Trademark Office at Reel _____, Frame _____, or a copy thereof is attached.

OR

B. [ ] A chain of title from the inventor(s) of the patent application identified above, to the current assignee as shown below:

1. From: _____ To: _____
The document was recorded in the United States Patent and Trademark Office at Reel _____, Frame _____, or a copy thereof is attached.

2. From: _____ To: _____
The document was recorded in the United States Patent and Trademark Office at Reel _____, Frame _____, or a copy thereof is attached.

3. From: _____ To: _____
The document was recorded in the United States Patent and Trademark Office at Reel _____, Frame _____, or a copy thereof is attached.

[ ] Additional documents in the chain of title are listed on a supplemental sheet.

The undersigned (whose title is supplied below) is authorized to act on behalf of the assignee.

Date: 2 SEPTEMBER 2004

Name: IAN BONAS

Title: DIRECTOR

Signature: IGBy

@PFDesktop\::ODMA/MHODMA/HBSR05;iManage;459100;1

COPY

Docket No. 3274.1003-000

Sole

ASSIGNMENT

WHEREAS, I, **Melanie Holmes**, have invented a certain improvement in **Optical Processing**, described in an application for Patent,

[ ] the specification of which is being executed on even date herewith and is about to be filed in the United States Patent Office *(use for 37 CFR §1.53(b) filings only)*;

[ ] is about to be filed in the United States Patent Office as a Provisional Application;

[ ] the specification of which is United States Application No.[ ], filed [ ];

[X] the specification of which is a Patent Cooperation Treaty Application, International Application No. **PCT/GB02/04011**, which designates the United States of America;

[ ] which was patented under United States Patent No. [ ].

WHEREAS, **Thomas Swan & Co. Ltd.** (hereinafter "ASSIGNEE"), a corporation organized and existing under the laws of the United Kingdom, and having a usual place of business at **Crookhall, Consett, Co. Durham DH8 7ND, United Kingdom,** desires to acquire an interest therein in accordance with agreements duly entered into with me;

NOW, THEREFORE, to all whom it may concern be it known that for and in consideration of said agreements and of other good and valuable consideration, the receipt of which is hereby acknowledged, I have sold, assigned and transferred and by these presents do hereby sell, assign and transfer unto said ASSIGNEE, its successors, assigns and legal representatives, the entire right, title and interest in and throughout the United States of America, its territories and all foreign countries, in and to said invention as described in said application, together with the entire right, title and interest in and to said application and such Letters Patent as may issue on said invention; said invention, application and Letters Patent to be held and enjoyed by said ASSIGNEE for its own use and behalf and for its successors, assigns and legal representatives, to the full end of the term for which said Letters Patent may be granted as fully and entirely as the same would have been held by me had this assignment and sale not been made; I hereby convey all rights arising under or pursuant to any and all international agreements, treaties or laws relating to the protection of industrial property by filing any such applications for Letters Patent. I hereby acknowledge that this assignment, being of the entire right, title and interest in and to said invention, carries with it the right in ASSIGNEE to apply for and obtain from competent authorities in all countries of the world any and all Letters Patent by attorneys and agents of ASSIGNEE's selection and the right to procure the grant of all such Letters Patent to ASSIGNEE for its own name as assignee of the entire right, title and interest therein;

AND, I hereby further agree for myself and my executors and administrators to execute upon request any other lawful documents and likewise to perform any other lawful acts which may be deemed necessary to secure fully the aforesaid invention to said ASSIGNEE, its successors, assigns and legal representatives, but at its or their expense and charges, including the

execution of applications for patents in foreign countries, and the execution of any further applications including substitution, reissue, divisional or continuation applications, and preliminary or other statements and the giving of testimony in any interference or other proceeding in which said invention or any application or patent directed thereto may be involved;

AND, I do hereby authorize and request each Patent Office and the Commissioner of Patents of the United States to issue such Letters Patent as shall be granted upon said invention to said ASSIGNEE, its successors, assigns, and legal representatives.

Inventor Melanie Holmes Date 20.08.04

Melanie Holmes

Address 39 Orford Street

Ipswich IP1 3PE Great Britain

Witness ARISTODIMOS KOURIS

Address 57 ROCKMILL END, WILLINGHAM, CAMBRIDGE, CB4 5HY

Witness JASON REICH

Address 109 ~~[illegible]~~ KINGS HEDGES RD CAMBRIDGE, CB4 2PL

UNITED STATES PATENT AND TRADEMARK OFFICE

UNITED STATES DEPARTMENT OF COMMERCE
United States Patent and Trademark Office
Address: COMMISSIONER FOR PATENTS
P.O. Box 1450
Alexandria, Virginia 22313-1450
www.uspto.gov

U.S. APPLICATION NUMBER NO.	FIRST NAMED APPLICANT	ATTY. DOCKET NO.
10/487,810	Melanie Holmes	3274.1003-000

INTERNATIONAL APPLICATION NO.	
PCT/GB02/04011	
I.A. FILING DATE	PRIORITY DATE
09/02/2002	09/03/2001

021005
HAMILTON, BROOK, SMITH & REYNOLDS, P.C.
530 VIRGINIA ROAD
P.O. BOX 9133
CONCORD, MA 01742-9133

CONFIRMATION NO. 3616

371 ACCEPTANCE LETTER

OC000000013906043

Date Mailed: 09/28/2004

NOTICE OF ACCEPTANCE OF APPLICATION UNDER 35 U.S.C 371 AND 37 CFR 1.495

The applicant is hereby advised that the United States Patent and Trademark Office in its capacity as a Designated / Elected Office (37 CFR 1.495), has determined that the above identified international application has met the requirements of 35 U.S.C. 371, and is ACCEPTED for national patentability examination in the United States Patent and Trademark Office.

The United States Application Number assigned to the application is shown above and the relevant dates are:

09/10/2004	09/10/2004
DATE OF RECEIPT OF 35 U.S.C. 371(c)(1), (c)(2) and (c)(4) REQUIREMENTS	DATE OF COMPLETION OF ALL 35 U.S.C. 371 REQUIREMENTS

A Filing Receipt (PTO-103X) will be issued for the present application in due course. **THE DATE APPEARING ON THE FILING RECEIPT AS THE " FILING DATE" IS THE DATE ON WHICH THE LAST OF THE 35 U.S.C. 371 (c)(1), (c)(2) and (c)(4) REQUIREMENTS HAS BEEN RECEIVED IN THE OFFICE. THIS DATE IS SHOWN ABOVE.** *The filing date of the above identified application is the international filing date of the international application (Article 11(3) and 35 U.S.C. 363).* Once the Filing Receipt has been received, send all correspondence to the Group Art Unit designated thereon.

The following items have been received:

- Indication of Small Entity Status
- Copy of the International Application filed on 02/26/2004
- Copy of the International Search Report filed on 02/26/2004
- Preliminary Amendments filed on 09/10/2004
- Information Disclosure Statements filed on 09/10/2004
- Oath or Declaration filed on 09/10/2004
- Small Entity Statement filed on 09/10/2004
- Copy of references cited in ISR filed on 02/26/2004
- U.S. Basic National Fees filed on 02/26/2004
- Priority Documents filed on 02/26/2004
- Power of Attorney filed on 09/10/2004

Applicant is reminded that any communications to the United States Patent and Trademark Office must be mailed to the address given in the heading and include the U.S. application no. shown above (37 CFR 1.5)

PATRICIA A BOOKER
Telephone: (703) 308-9140 EXT 204

PART 3 - OFFICE COPY

FORM PCT/DO/EO/903 (371 Acceptance Notice)

287

IN THE UNITED STATES PATENT AND TRADEMARK OFFICE

Applicant:	Melanie Holmes		
Application No.:	10/487,810	Group Art Unit:	Not assigned.
371(c) Filing Date::	September 10, 2004	Examiner:	Not assigned.
Confirmation No.:	3616		
Title:	OPTICAL PROCESSING		

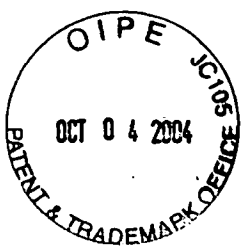

CERTIFICATE OF MAILING OR TRANSMISSION

I hereby certify that this correspondence is being deposited with the United States Postal Service with sufficient postage as First Class Mail in an envelope addressed to Commissioner for Patents, P.O. Box 1450, Alexandria, VA 22313-1450, or is being facsimile transmitted to the United States Patent and Trademark Office on:

9/30/04 Julie Kertyzak
Date Signature

Julie Kertyzak
Typed or printed name of person signing certificate

SUPPLEMENTAL INFORMATION DISCLOSURE STATEMENT

Mail Stop Amendment
Commissioner for Patents
P.O. Box 1450
Alexandria, VA 22313-1450

Sir:

This Information Disclosure Statement is submitted:

[ ] under 37 CFR 1.129(a), or
(First/Second submission after Final Rejection)

[X] under 37 CFR 1.97(b), or
(Within any one of the following time periods: three months of filing national application (other than a CPA) or date of entry of the national stage in an international application; or before the mailing date of a first office action on the merits in a non-provisional application, including a CPA, or a Request for Continued Examination).

[ ] under 37 CFR 1.97(c) together with either:

[ ] a Statement under 37 CFR 1.97(e), as checked below, or

[ ] a $180.00 fee under 37 CFR 1.17(p), or
(After the 37 CFR 1.97(b) time period, but before final action or notice of allowance, whichever occurs first)

[ ] under 37 CFR 1.97(d) together with:

[ ] a Statement under 37 CFR 1.97(e), as checked below, and

[ ] a $180.00 fee under 37 CFR 1.17(p), or
(Filed after final action or notice of allowance, whichever occurs first, but on or before payment of the issue fee)

[ ] under 37 CFR 1.97(i):
Applicant requests that the IDS and cited reference(s) be placed in the application filewrapper.
(Filed after payment of issue fee)

Statement Under 37 CFR 1.97(e)

[ ] Each item of information contained in this Information Disclosure Statement was first cited in any communication from a foreign patent office in a counterpart foreign application not more than three months prior to the filing of this Information Disclosure Statement; or

[ ] No item of information contained in this Information Disclosure Statement was cited in a communication from a foreign patent office in a counterpart foreign application, and, to the knowledge of the undersigned, after making reasonable inquiry, no item of information contained in the information disclosure statement was known to any individual designated in 37 CFR 1.56(c) more than three months prior to the filing of this Information Disclosure Statement.

Statement Under 37 CFR 1.704(d) (Patent Term Adjustment)
Applies to original applications (other than design) filed on or after May 29, 2000

[ ] Each item of information contained in the Information Disclosure Statement was cited in a communication from a foreign patent office in a counterpart application and this communication was not received by any individual designated in § 1.56(c) more than thirty days prior to the filing of the Information Disclosure Statement.

[X] Enclosed herewith is form PTO-1449:

[X] Copies of the cited reference is enclosed.

[ ] Since this application was filed after June 30, 2003, copies of issued U.S. patents and published U.S. applications are not required and are not being provided.

[ ] Copies of the cited references are enclosed except those entered in prior application, U.S. Application No. [ ], to which priority under 35 U.S.C. 120 is claimed. [The earlier application contains copies of the cited references.]

[ ] The listed references were cited in the enclosed International Search Report in a counterpart foreign application.

[ ] The "concise explanation" requirement (non-English references) for reference(s) [ ] under 37 CFR 1.98(a)(3) is satisfied by:

[ ] the explanation provided on the attached sheet.

[ ] the explanation provided in the Specification.

[ ] submission of the enclosed International Search Report.

[ ] submission of the enclosed English-language version of a foreign Search Report and/or foreign Office Action.

[ ] the enclosed English language abstract.

[ ] Applicant requests that the following non-published pending applications be considered:

Examiner's Initials

_____ U.S. Patent Application No. [ ], by [inventor(s)], filed [ ], Docket No.: [ ]

_____ U.S. Patent Application No. [ ], by [inventor(s)], filed [ ], Docket No.: [ ]

_____ U.S. Patent Application No. [ ], by [inventor(s)], filed [ ], Docket No.: [ ]

_____ _____

Examiner Date

[ ] A copy of each above-cited application, including the current claims, is enclosed.

[ ] A copy of each above-cited application, including the current claims, is enclosed, except those entered in prior application, U.S. Application No. [ ], to which priority under 35 U.S.C. 120 is claimed.

The Examiner is requested to return a copy of the above list of pending applications indicating which references were considered with the next office communication.

It is requested that the information disclosed herein be made of record in this application.

Method of payment:

[ ] A check for the fee noted above is enclosed, or the fee has been included in the check with the accompanying Reply. A copy of this Statement is enclosed.

[ ] Please charge Deposit Account 08-0380 in the amount of $[ ]. A copy of this Statement is enclosed.

[X] Please charge any deficiency in fees and credit any overpayment to Deposit Account 08-0380.

Respectfully submitted,

HAMILTON, BROOK, SMITH & REYNOLDS, P.C.

By _____

Timothy J. Meagher
Registration No.: 39,302
Telephone: (978) 341-0036
Facsimile: (978) 341-0136

Concord, MA 01742-9133

Dated: 9/30/04

PTO-1449 REPRODUCED	ATTORNEY DOCKET NO.	APPLICATION NO.	
INFORMATION DISCLOSURE CITATION IN AN APPLICATION	3274.1003-000	10/487,810	
	FIRST NAMED INVENTOR	371(c) FILING DATE	
September 30, 2004	Melanie Holmes	September 10, 2004	
(Use several sheets if necessary)	EXAMINER	CONFIRMATION NO.	GROUP
	N/A.	3616	N/A.

		OTHER DOCUMENTS *(Including Author, Title, Date, Pertinent Pages, Etc.)*
	AU	Marom, D.M., *et al.*, "Wavelength-Selective 1x4 Switch for 128 WDM Channels at 50 Ghz Spacing," *OFC Postdeadline Paper*, pp. FB7-1-FB7-3 (2002).
	AV	
	AW	
	AX	
	AY	
	AZ	
	AR2	
	AS2	
	AT2	
	AU2	
	AV2	
	AW2	
	AX2	
	AY2	

OIPE OCT 0 4 2004 PATENT & TRADEMARK OFFICE JC105

EXAMINER	DATE CONSIDERED

Wavelength-selective 1×4 switch for 128 WDM channels at 50 GHz spacing

D. M. Marom, D. T. Neilson†, D. S. Greywall‡, N. R. Basavanhally‡, P. R. Kolodner‡, Y. L. Low‡, F. Pardo‡, C. A. Bolle‡, S. Chandrasekhar†, L. Buhl†, C. R. Giles

Bell Laboratories, Lucent Technologies, 101 Crawfords Corner Rd., Holmdel NJ 07733
† *Bell Laboratories, Lucent Technologies, 791 Holmdel-Keyport Rd., Holmdel NJ 07733*
‡ *Bell Laboratories, Lucent Technologies, 600 Mountain Ave., Murray Hill, NJ 07974*
Tel: (732) 949-1108, Fax: (732) 949-2473, Email: dmarom@lucent.com

and

S.-H. Oh, C. S. Pai, K. Werder, H. T. Soh, G. R. Bogart, E. Ferry, F. P. Klemens, K. Teffeau, J. F. Miner, S. Rogers, J. E. Bower, R. C. Keller, and W. Mansfield

Agere Systems, 600 Mountain Ave., Murray Hill, NJ 07974

Abstract: We present a reconfigurable wavelength-selective switch that independently distributes 128 input WDM channels to four output ports. The switch is based on bulk optics and MEMS micro-mirrors, exhibits <5 dB insertion loss and flat-top pass-bands, and is well suited for transparent switching of 10 Gb/s signals.
© 2002 Optical Society of America
OCIS codes: (060.1810) Couplers, switches, and multiplexers, (230.3990) Microstructure devices, (060.2330) fiber optics communications

The evolution towards transparent optical transport systems, with the use of enabling technologies as fiber amplifiers and WDM transmission, affords cost reduction and performance enhancements over legacy systems. Expensive electronic equipment, such as SONET ADM, is being replaced by optical add-drop multiplexers (OADM), which eliminate the unnecessary regeneration of express traffic channels. The dropped channels are typically detected locally for access or retransmitted onto another line system. Enabling the direct transfer of wavelengths from one line system to another without regeneration will extend the transparency region and reduce the overall network cost.

Transparent switching in today's multi-channel optical communication systems is often accomplished by first demultiplexing (Demux) the ingress WDM channels into separate ports, traversing through a high-port-count optical switch fabric,[1-3] and re-multiplexing (Mux) the channels into common egress fibers for transmission downstream. However, as the channel count and complexity of WDM networks increases, management of the multiple interconnecting fibers between the Demux, switching fabric, and Mux becomes more difficult. This solution also requires a high start-up cost. Integrating the Mux and Demux functionality into the switching device eliminates the need for these interconnecting fibers, as has been demonstrated for reconfigurable wavelength add-drop switches with free-space[4,5] or arrayed waveguide grating[6] (AWG) Mux/Demux technology, as well as optical cross connects with embedded AWG.[7] In this paper, we demonstrate a new transparent switch fabric that distributes any optical wavelengths from an input port to one of four output ports — wavelength-selective 1×4 switch — implemented with free-space optics and micro-electro-mechanical-system (MEMS) mirrors.

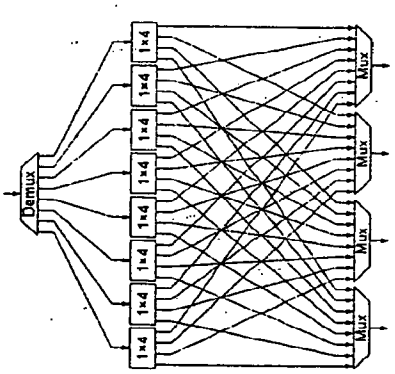

Fig. 1. Equivalent function of the wavelength-selective 1x4 switch using discrete multiplexers and switches.

The multi-port wavelength-selective switch accepts an optical signal comprised of 128 WDM channels at its input port and can independently switch every input optical channel to one of the 4 multiplexed output ports. Thus, every output port carries a subset of the input channels and cumulatively the 4 output ports contain all 128 WDM channels. The functionality provided by the wavelength-selective 1×4 switch could be implemented using discrete components, see Fig. 1 (drawn for simplicity with only 8 wavelength channels), however, as the figure illustrates, this

TS0001118

solution requires a large fiber count to interconnect the 128 port Demux, the 128 1×4 switches, and the 4 Muxes with 128 ports.

The wavelength-selective 1×4 switch architecture is comprised of two major sub-assemblies (see Fig. 2). The first sub-assembly comprises: a linear array of 5 fibers, 5 collimator lenses each aligned to a fiber in the array, and a high NA condenser lens whose aperture subtends all the collimator lenses. One fiber in the array carries the input WDM channels and the remaining four serve as the output fibers of the switch. This first sub-assembly images all the fiber end-faces onto a single small spot (whose size depends on the magnification ratio of the imaging system), such that the distinct fibers are now separated in angle space only (i.e., propagation direction). The second sub-assembly consists of a resolution lens, a diffraction grating, and a 128 MEMS micro-mirror array. This second sub-assembly disperses the optical channels onto the MEMS mirror array, such that each wavelength channel is incident upon a unique mirror in the array for independent addressing. The switch operates as follows: an input WDM channel from the ingress fiber (see A in Fig. 2) is imaged via the collimator and condenser in the first sub-assembly onto the common spot (B). The channel is subsequently imaged onto a particular micro-mirror (D) via the resolution lens and grating in the second sub-assembly. The mirror is tilted to a prescribed angle (one of 4 possible angles), such that the reflected beam is propagating in a different direction. The reflected beam passes through the same resolution lens and grating, ensuring that the reflected beam will be imaged back to the same common spot (B), yet with a different propagation direction that depends on the angle of the MEMS mirror (D). The beam continues to propagate through the first sub-assembly, which images the reflected beam at the distinct propagation direction onto one of the output fibers (F). Hence, the choice of output port is determined by the tilt angle of the MEMS mirror. The channel pass bands are determined by the amount of spatial dispersion (a function of the resolution lens and grating of the second sub-assembly) and the beam spot size at the output of the first sub-assembly, and can be designed to meet necessary bandwidth requirement.

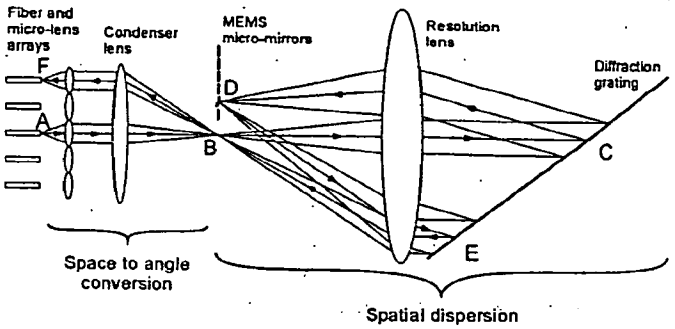

Fig. 2. Schematic of the optical system for the wavelength-selective 1x4 switch.

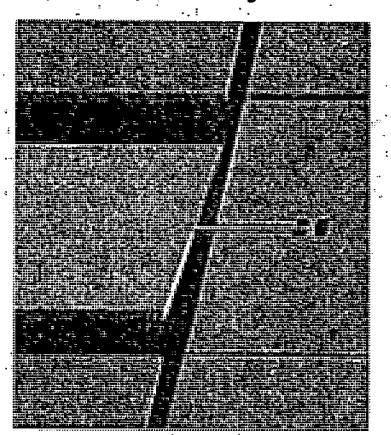

Fig. 3. SEM of actuated MEMS micro-mirror in the array.

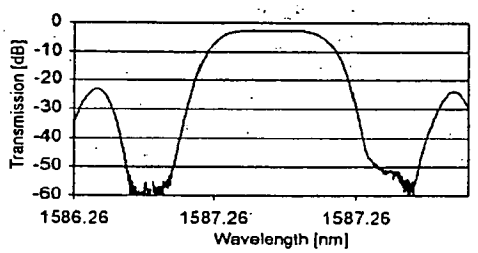

Fig. 4a. Typical passed channel when adjacent channels dropped. Pass band exhibits a broad flat top.

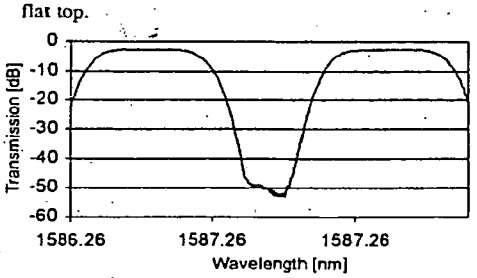

Fig. 4b. Typical rejection of a channel that was diverted to another output port when adjacent channels are transmitted.

We implemented a 128 channel, 50 GHz channel spacing, wavelength-selective 1×4 switch, to match the needs of next-generation transparent transport systems. A custom 100 mm focal length resolution lens and an 1100 gr/mm grating provide the necessary spatial dispersion. We also employ polarization diversity to offset the diffraction grating's polarization dependence. The fibers are imaged onto the common spot (position "B" in Fig. 2) by a magnification ratio of ×3. The MEMS mirrors are etched from a silicon-on-insulator (SOI) wafer, and have two support rods which define a rotation axis and allow for rotation about the axis (see Fig. 3). The mirrors are actuated by an electrostatic attractive force imposed by one of two electrodes per mirror on either side of the axis. The mirrors in our arrangement can rotate up to ±8°, at a max voltage of 115 VDC applied to either mirror electrode. The mirror size in the dispersion direction varies across the spectrum, due to the nonlinear angular dispersion that the high frequency grating exhibits over the 55 nm of bandwidth. The mirror gap is minimized to ensure that the channel pass bands are maximized, resulting in a very

TS0001119

high mirror fill ratio of 98%. Typical pass-band widths for a single isolated channel are: -1 dB level @ 35.6 GHz, -3 dB level @ 44.5 GHz (see Fig. 4a). The broad flat-top region enables the switch to be cascaded in transparent systems carrying 10Gbps data. The two peaks at –25 dB level that are visible beyond the nulls of the switched adjacent channels is light scattering from the mirror edges, which couples to all the output ports due to its large angular spectrum. Fortunately, in a real transmission system there is no illumination on the mirror edges, as each WDM channel signal is contained within the mirror area. These peaks are a consequence of the measurement technique. The directivity of the switch, measured when the adjacent channels are switched to a particular port (see Fig. 4b), is better than -30 dB across 27.1 GHz and better than -40 dB across 21.5 GHz.

We found insertion loss (IL) variation across the four output ports. The causes for these port losses are still under investigation, but we suspect that the system alignment can be improved further, as we can optimize the system to any particular port. When fully optimized to a particular port, the IL value is better than 3 dB. When we attempt to minimize the losses on all ports simultaneously, we find a worst case IL of 5 dB (inclusive of one connector loss). The switch does not exhibit any wavelength dependent loss across the wide optical bandwidth (see Fig. 5).

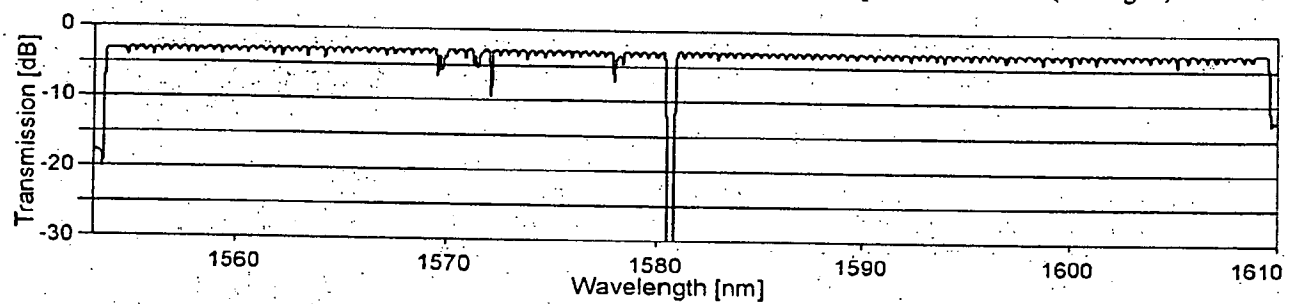

Fig. 5. Transmitted spectrum of all 128 wavelength channels through switch, showing negligible wavelength dependent loss. Few mirrors from the array are non-functioning on this early prototype.

The filter shape effect for a particular single switched wavelength channel was experimentally evaluated by transmitting 10 Gb/s, 33% RZ pseudorandom data through the channel located at 1566.3nm and detuning the optical carrier center frequency from the filter's ITU grid. The power penalty was less than 1 dB for frequency detuning as large as ±15 GHz (see Fig. 6), measured with a 2^{31} length sequence. The power penalty rises quickly beyond ±15 GHz as one of the 10 GHz side tones crosses over the border to the adjacent channel pass band (border, and mirror edge, are at 25 GHz for a 50 GHz based device). This translates to a ±30% channel margin for the transmitter, leading to increased robustness in optical transport systems.

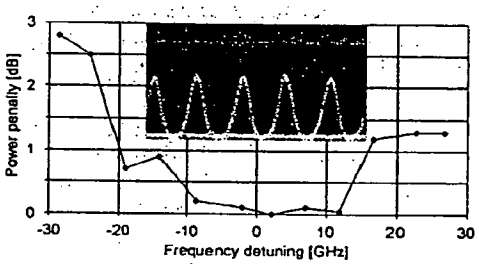

Fig. 6. Power penalty induced by filter shape as a function of detuning the optical carrier frequency. Inset: eye diagram at zero offset.

In summary, we presented a new multi-port wavelength-selective switch fabric based on free-space optics and MEMS micro-mirrors technologies. This free-space arrangement integrated Demux, switch and Mux functionality into one compact, low loss unit with very high channel count and flat-top pass band characteristics. 10 Gb/s RZ data transmission through the switch showed negligible channel degradation and a large channel margin as required for next-generation transparent transport systems.

References:

1. J.Leuthold, R.Ryf, S.Chandrasekhar, D.T.Neilson, C.H.Joyner, C.R.Giles, "All-optical nonblocking terabit/s crossconnect based on low power all-optical wavelength converter and MEMS switch fabric," OFC 2001, PD-16.
2. L. Y Lin, E. L. Goldstein, and R. W. Tkach, "Free-space micromachined optical switches with submillisecond switching time for large-scale optical crossconnects," IEEE Photonics Technol. Lett. 10, p. 525-527 (1998).
3. J. E. Fouquet, S. Venkatesh, M. Troll, D. Chen, H. F. Wong, and P. W. Barth, "A Compact, scalable cross-connect switch using total internal reflection due to thermally-generated bubbles," 1998 IEEE LEOS Annual Meeting, Vol. 2, p. 169-170 (1998).
4. J.E.Ford, V.A.Aksyuk, D.J.Bishop, J.A.Walker, "Wavelength add-drop switching using tilting micromirrors," J. Lightwave Technol. 17, p. 904-911 (1999).
5. J. Kondis,B. A. Scott, A. Ranalli, R. Lindquist, "Liquid crystals in bulk optics-based DWDM optical switches and spectral equalizers," 2001 IEEE LEOS Annual Meeting, Vol. 1, p. 292-293 (2001).
6. C. R. Doerr, L. W. Stulz, J. Gates, M. Cappuzzo, E. Laskowski, L. Gomez, A. Paunescu, A. White, and C. Narayanan, "Arrayed waveguide lens wavelength add-drop in silica," IEEE Photon. Technol. Lett. 11, pp. 557-559 (1999).
7. R. Ryf, *et al.*, "Scalable wavelength-selective crossconnect switch based on MEMS and planar waveguides," ECOC 2001 post deadline.

TS0001120

UNITED STATES PATENT AND TRADEMARK OFFICE

UNITED STATES DEPARTMENT OF COMMERCE
United States Patent and Trademark Office
Address: COMMISSIONER FOR PATENTS
P.O. Box 1450
Alexandria, Virginia 22313-1450
www.uspto.gov

APPLICATION NO.	FILING DATE	FIRST NAMED INVENTOR	ATTORNEY DOCKET NO.	CONFIRMATION NO.
10/487,810	09/10/2004	Melanie Holmes	3274.1003-000	3616

21005 7590 03/07/2006

HAMILTON, BROOK, SMITH & REYNOLDS, P.C.
530 VIRGINIA ROAD
P.O. BOX 9133
CONCORD, MA 01742-9133

EXAMINER	
BEN, LOHA	

ART UNIT	PAPER NUMBER
2873	

DATE MAILED: 03/07/2006

Please find below and/or attached an Office communication concerning this application or proceeding.

Office Action Summary	Application No.	Applicant(s)	
	10/487,810	HOLMES, MELANIE	
	Examiner	Art Unit	
	Loha Ben	2873	

-- The MAILING DATE of this communication appears on the cover sheet with the correspondence address --

Period for Reply

A SHORTENED STATUTORY PERIOD FOR REPLY IS SET TO EXPIRE 1 MONTH(S) OR THIRTY (30) DAYS, WHICHEVER IS LONGER, FROM THE MAILING DATE OF THIS COMMUNICATION.

- Extensions of time may be available under the provisions of 37 CFR 1.136(a). In no event, however, may a reply be timely filed after SIX (6) MONTHS from the mailing date of this communication.
- If NO period for reply is specified above, the maximum statutory period will apply and will expire SIX (6) MONTHS from the mailing date of this communication.
- Failure to reply within the set or extended period for reply will, by statute, cause the application to become ABANDONED (35 U.S.C. § 133). Any reply received by the Office later than three months after the mailing date of this communication, even if timely filed, may reduce any earned patent term adjustment. See 37 CFR 1.704(b).

Status

1)☒ Responsive to communication(s) filed on *26 February 2004*.

2a)☐ This action is **FINAL**. 2b)☐ This action is non-final.

3)☐ Since this application is in condition for allowance except for formal matters, prosecution as to the merits is closed in accordance with the practice under *Ex parte Quayle*, 1935 C.D. 11, 453 O.G. 213.

Disposition of Claims

4)☐ Claim(s) _____ is/are pending in the application.

4a) Of the above claim(s) _____ is/are withdrawn from consideration.

5)☐ Claim(s) _____ is/are allowed.

6)☐ Claim(s) _____ is/are rejected.

7)☐ Claim(s) _____ is/are objected to.

8)☒ Claim(s) *1-28* are subject to restriction and/or election requirement.

Application Papers

9)☐ The specification is objected to by the Examiner.

10)☐ The drawing(s) filed on _____ is/are: a)☐ accepted or b)☐ objected to by the Examiner.

Applicant may not request that any objection to the drawing(s) be held in abeyance. See 37 CFR 1.85(a).

Replacement drawing sheet(s) including the correction is required if the drawing(s) is objected to. See 37 CFR 1.121(d).

11)☐ The oath or declaration is objected to by the Examiner. Note the attached Office Action or form PTO-152.

Priority under 35 U.S.C. § 119

12)☒ Acknowledgment is made of a claim for foreign priority under 35 U.S.C. § 119(a)-(d) or (f).

a)☒ All b)☐ Some * c)☐ None of:

1.☒ Certified copies of the priority documents have been received.

2.☐ Certified copies of the priority documents have been received in Application No. _____.

3.☐ Copies of the certified copies of the priority documents have been received in this National Stage application from the International Bureau (PCT Rule 17.2(a)).

* See the attached detailed Office action for a list of the certified copies not received.

Attachment(s)

1) ☐ Notice of References Cited (PTO-892)
2) ☐ Notice of Draftsperson's Patent Drawing Review (PTO-948)
3) ☐ Information Disclosure Statement(s) (PTO-1449 or PTO/SB/08) Paper No(s)/Mail Date _____.
4) ☐ Interview Summary (PTO-413) Paper No(s)/Mail Date. _____ .
5) ☐ Notice of Informal Patent Application (PTO-152)
6) ☐ Other: _____.

DETAILED ACTION

Election/Restrictions

Restriction is required under 35 U.S.C. 121 and 372.

This application contains the following inventions or groups of inventions which are not so linked as to form a single general inventive concept under PCT Rule 13.1.

In accordance with 37 CFR 1.499, applicant is required, in reply to this action, to elect a single invention to which the claims must be restricted.

Group I, claims 1-14, drawn to 2-D array of controllable phase-modulating elements and method of operating same, classified in class 359, sub-class 279.

Group II, claim 15, drawn to beam shaping device, classified in class 359, sub-class 291.

Group III, claims 16-18 and 28, drawn to diffraction grating device and method of filtering light by diffraction grating, classified in class 359, sub-class 566.

Group IV, claim 19, drawn to optical add/drop multiplexer, classified in class 398, sub-class 83.

Group V, claims 20-21, drawn to test or monitoring device, classified in class 385, sub-class 18.

Group VI, claim 22, drawn to power control device using power-control hologram, classified in class 359, sub-class 288.

Group VII, claims 23-27, drawn to routing device, classified in class 398, sub-class 49.

The inventions listed as Groups I - VII do not relate to a single general inventive concept under PCT Rule 13.1 because, under PCT Rule 13.2, they lack the same or corresponding special technical features for the following reasons: The inventions listed are unrelated inventions, because the device or method recited in each invention has its own function or effect.

Applicant is advised that the reply to this requirement to be complete must include (i) an election of a species or invention to be examined even though the requirement be traversed (37 CFR 1.143) and (ii) identification of the claims encompassing the elected invention.

The election of an invention or species may be made with or without traverse. To reserve a right to petition, the election must be made with traverse. If the reply does not distinctly and specifically point out supposed errors in the restriction requirement, the election shall be treated as an election without traverse.

Should applicant traverse on the ground that the inventions or species are not patentably distinct, applicant should submit evidence or identify such evidence now of record showing the inventions or species to be obvious variants or clearly admit on the record that this is the case. In either instance, if the examiner finds one of the inventions unpatentable over the prior art, the evidence or admission may be used in a rejection under 35 U.S.C.103(a) of the other invention.

Any inquiry concerning this communication or earlier communications from the examiner should be directed to Loha Ben whose telephone number is (571) 272-2323. The examiner can normally be reached on Monday to Saturday, generally between 12:00 noon to 8:00 p.m.

If attempts to reach the examiner by telephone are unsuccessful, the examiner's supervisor, Ricky Mack, can be reached on Monday to Friday, at (571) 272-2333. The fax phone number for the organization where this application or proceeding is assigned is 571-273-8300.

Information regarding the status of an application may be obtained from the Patent Application Information Retrieval (PAIR) system. Status information for published applications may be obtained from either Private PAIR or Public PAIR. Status information for unpublished applications is available through Private PAIR only. For more information about the PAIR system, see http://pair-direct.uspto.gov. Should you have questions on access to the Private PAIR system, contact the Electronic Business Center (EBC) at 866-217-9197 (toll-free).

March 3, 2006

Loha Ben
Primary Examiner

UNITED STATES PATENT AND TRADEMARK OFFICE

UNITED STATES DEPARTMENT OF COMMERCE
United States Patent and Trademark Office
Address: COMMISSIONER FOR PATENTS
P.O. Box 1450
Alexandria, Virginia 22313-1450
www.uspto.gov

Bib Data Sheet

CONFIRMATION NO. 3616

SERIAL NUMBER	FILING DATE	CLASS	GROUP ART UNIT	ATTORNEY DOCKET NO.
10/487,810	09/10/2004 RULE	359	2873	3274.1003-000

APPLICANTS

Melanie Holmes, Ipswich, UNITED KINGDOM;

** CONTINUING DATA **********

This application is a 371 of PCT/GB02/04011 09/02/2002

** FOREIGN APPLICATIONS **********

UNITED KINGDOM 01213081 09/03/2001

** SMALL ENTITY **

Foreign Priority claimed ☑ yes ☐ no 35 USC 119 (a-d) conditions met ☑ yes ☐ no ☐ Met after Allowance Verified and Acknowledged _____ Examiner's Signature Initials	STATE OR COUNTRY UNITED KINGDOM	SHEETS DRAWING 36	TOTAL CLAIMS 28	INDEPENDENT CLAIMS 13

ADDRESS
021005
HAMILTON, BROOK, SMITH & REYNOLDS, P.C.
530 VIRGINIA ROAD
P.O. BOX 9133
CONCORD , MA
01742-9133

TITLE
Optical processing

FILING FEE RECEIVED 1027	FEES: Authority has been given in Paper No. _____ to charge/credit DEPOSIT ACCOUNT No. _____ for following:	☐ All Fees ☐ 1.16 Fees (Filing) ☐ 1.17 Fees (Processing Ext. of time) ☐ 1.18 Fees (Issue)

		☐ Other _____
		☐ Credit

Index of Claims

Application/Control No.	Applicant(s)/Patent under Reexamination
10/487,810	HOLMES, MELANIE
Examiner	**Art Unit**
Loha Ben	2873

√	Rejected	–	(Through numeral) Cancelled	N	Non-Elected	A	Appeal
=	Allowed	÷	Restricted	I	Interference	O	Objected

Claim		Date								
Final	Original	3/3/06								
	1	+								
	2	+								
	3	+								
	4	+								
	5	+								
	6	+								
	7	+								
	8	+								
	9	+								
	10	+								
	11	+								
	12	+								
	13	÷								
	14	÷								
	15	+								
	16	+								
	17	÷								
	18	÷								
	19	+								
	20	+								
	21	+								
	22	+								
	23	+								
	24	+								
	25	+								
	26	+								
	27	+								
	28	+								
	29									
	30									
	31									
	32									
	33									
	34									
	35									
	36									
	37									
	38									
	39									
	40									
	41									
	42									
	43									
	44									
	45									
	46									
	47									
	48									
	49									
	50									

Claim		Date								
Final	Original									
	51									
	52									
	53									
	54									
	55									
	56									
	57									
	58									
	59									
	60									
	61									
	62									
	63									
	64									
	65									
	66									
	67									
	68									
	69									
	70									
	71									
	72									
	73									
	74									
	75									
	76									
	77									
	78									
	79									
	80									
	81									
	82									
	83									
	84									
	85									
	86									
	87									
	88									
	89									
	90									
	91									
	92									
	93									
	94									
	95									
	96									
	97									
	98									
	99									
	100									

Claim		Date								
Final	Original									
	101									
	102									
	103									
	104									
	105									
	106									
	107									
	108									
	109									
	110									
	111									
	112									
	113									
	114									
	115									
	116									
	117									
	118									
	119									
	120									
	121									
	122									
	123									
	124									
	125									
	126									
	127									
	128									
	129									
	130									
	131									
	132									
	133									
	134									
	135									
	136									
	137									
	138									
	139									
	140									
	141									
	142									
	143									
	144									
	145									
	146									
	147									
	148									
	149									
	150									

IN THE UNITED STATES PATENT AND TRADEMARK OFFICE

Applicant:	Melanie Holmes	
Application No.:	10/487,810	Group Art Unit: 2873
371(c) Filing Date::	September 10, 2004	Examiner: Ben, Loha
Confirmation No.:	3616	
Title:	OPTICAL PROCESSING	

REPLY TO RESTRICTION REQUIREMENT

Commissioner for Patents
P.O. Box 1450
Alexandria, VA 22313-1450

Sir:

Responsive to the Restriction Requirement dated March 7, 2006, the claims of Group I (Claims 1-14) drawn to 2-D array of controllable phase-modulating elements and method of operating same, classified in class 359, sub-class 279 are elected for prosecution. Applicant reserves the right to file a continuing application or take such other appropriate action as deemed necessary to protect the non-elected inventions. Applicant does not hereby abandon or waive any rights in the non-elected inventions.

An extension of time to respond to the Restriction Requirement is respectfully requested. A Petition for an Extension of Time and the appropriate fee are being filed concurrently.

Respectfully submitted,

HAMILTON, BROOK, SMITH & REYNOLDS, P.C.

By _____
Timothy J. Meagher
Registration No. 39,302
Telephone: (978) 341-0036
Facsimile: (978) 341-0136

Concord, MA 01742-9133
Dated: 4/28/6

IN THE UNITED STATES PATENT AND TRADEMARK OFFICE

Applicant: Melanie Holmes

Application No.: 10/487,810 Group: 2873

Filed: September 10, 2004 Examiner: Ben, Loha

Confirmation No.: 3616

For: OPTICAL PROCESSING

PETITION FOR EXTENSION OF TIME

Commissioner for Patents
P.O. Box 1450
Alexandria, VA 22313-1450

Sir:

Applicant hereby petitions the Commissioner for Patents to extend the time for filing a Reply to the Restriction Requirement dated March 7, 2006 for one month from April 7, 2006 to May 7, 2006 under 37 C.F.R. § 1.136(a).

	Small Entity	Other than Small Entity
1 month -	X $ 60	_____ $ 120
2 months -	_____ $ 225	_____ $ 450
3 months -	_____ $ 510	_____ $1,020
4 months -	_____ $ 795	_____ $1,590
5 months -	_____ $1,080	_____ $2,160

[ ] A check is enclosed in the amount of the extension fee indicated above, or the extension fee has been included in the check with the accompanying Reply.

[ ] Please charge Deposit Account No. 08-0380 in the amount of $[ ] to cover the cost of the extension fee.

Any deficiency or overpayment should be charged or credited to Deposit Account No. 08-0380. A copy of this letter is enclosed for accounting purposes.

Respectfully submitted,

HAMILTON, BROOK, SMITH & REYNOLDS, P.C.

By _____
Timothy J. Meagher
Registration No. 39,302
Telephone (978) 341-0036
Facsimile (978) 341-0136

Concord, Massachusetts 01742-9133
Dated: 4/25/06

Electronic Acknowledgement Receipt

EFS ID:	1033897
Application Number:	10487810
Confirmation Number:	3616
Title of Invention:	Optical processing
First Named Inventor:	Melanie Holmes
Customer Number:	21005
Filer:	Timothy J. Meagher/Julie Kertyzak
Filer Authorized By:	Timothy J. Meagher
Attorney Docket Number:	3274.1003-000
Receipt Date:	28-APR-2006
Filing Date:	10-SEP-2004
Time Stamp:	15:04:26
Application Type:	U.S. National Stage under 35 USC 371
International Application Number:	

Payment information:

Submitted with Payment	yes
Payment was successfully received in RAM	$60.0
RAM confirmation Number	43
Deposit Account	080380
The Director of the USPTO is hereby authorized to charge indicated fees and credit any overpayment as follows: Charge any Additional Fees required under 37 C.F.R. Section 1.16 and 1.17	

File Listing:

Document Number	Document Description	File Name	File Size(Bytes)	Multi Part	Pages
1	Response to Election / Restriction Filed	621823_1.PDF	34287	no	1
Warnings:					
Information:					
2	Extension of Time	621821_1.PDF	30238	no	1
Warnings:					
Information:					
3	Fee Worksheet (PTO-875)	fee-info.pdf	8140	no	2
Warnings:					
Information:					
		Total Files Size (in bytes):	72665		

This Acknowledgement Receipt evidences receipt on the noted date by the USPTO of the indicated documents, characterized by the applicant, and including page counts, where applicable. It serves as evidence of receipt similar to a Post Card, as described in MPEP 503.

New Applications Under 35 U.S.C. 111
If a new application is being filed and the application includes the necessary components for a filing date (see 37 CFR 1.53(b)-(d) and MPEP 506), a Filing Receipt (37 CFR 1.54) will be issued in due course and the date shown on this Acknowledgement Receipt will establish the filing date of the application.

National Stage of an International Application under 35 U.S.C. 371
If a timely submission to enter the national stage of an international application is compliant with the conditions of 35 U.S.C. 371 and other applicable requirements a Form PCT/DO/EO/903 indicating acceptance of the application as a national stage submission under 35 U.S.C. 371 will be issued in addition to the Filing Receipt, in due course.

Electronic Patent Application Fee Transmittal

Application Number:	10487810
Filing Date:	10-Sep-2004
Title of Invention:	Optical processing
First Named Inventor:	Melanie Holmes
Filer:	Timothy J. Meagher/Julie Kertyzak
Attorney Docket Number:	3274.1003-000

Filed as Small Entity

U.S. National Stage under 35 USC 371 Filing Fees

Description	Fee Code	Quantity	Amount	Sub-Total in USD($)
Basic Filing:				
Pages:				
Claims:				
Miscellaneous-Filing:				
Petition:				
Patent-Appeals-and-Interference:				
Post-Allowance-and-Post-Issuance:				
Extension-of-Time:				
Extension - 1 month with $0 paid	2251	1	60	60

Description	Fee Code	Quantity	Amount	Sub-Total in USD($)
Miscellaneous:				
			Total in USD ($)	**60**

10/487,810

WEST Search History

Hide Items | Restore | Clear | Cancel

DATE: Thursday, May 04, 2006

Hide?	Set Name	Query	Hit Count
		DB=PGPB; PLUR=YES; OP=OR	
☐	L9	L6 and hologram$1 SAME (process$3 or phase$1 or SLM$1 or (spatial ADJ light ADJ modulator$1)) SAME (delineat$3 or select$3 or vary$3 or variation$1 or generat$3).CLM.	1
		DB=PGPB,USPT,USOC,EPAB,JPAB,DWPI,TDBD; PLUR=YES; OP=OR	
☐	L8	L6 and hologram$1 SAME (process$3 or phase$1 or SLM$1 or (spatial ADJ light ADJ modulator$1)) SAME (delineat$3 or select$3 or vary$3 or variation$1 or generat$3)	20
☐	L7	L6 and hologram$1 SAME (process$3 or phase$1 or SLM$1 or (spatial ADJ light ADJ modulator$1))	22
☐	L6	L5 & L3	46
☐	L5	phase$1 WITH (distort$4 or compensat$3 or conjugat$3 or voltage$1 or modulat$3) SAME ((spatial ADJ light ADJ modulator$1) or SLM$1) SAME (voltage41 or pixel$6 or modulo or pi or 2pi or (liquid ADJ crystal$1))	774
☐	L4	phase$1 WITH (distort$4 or compensat$3 or conjugat$3 or voltage$1 or modulat$3)	350181
☐	L3	(hologram$1 or aberrat$4) WITH (temperature$1 or correct$3 or compensat$3 or distort$4) SAME ((spatial ADJ light ADJ modulator$1) or SLM$1) SAME (voltage$1 or pixel$6 or modulo or pi or 2pi or (liquid ADJ crystal$1))	112
☐	L2	(hologram$1 or aberrat$4) WITH (temperature$1 or correct$3 or compensat$3 or distort$4)	37298
☐	L1	(hologram$1 or aberrat$4) WITH (temperature$1 or correct$3 or compensat$3 or distor$4)	36870

END OF SEARCH HISTORY

10/487,810

	Type	L #	Hits	Search Text	DBs	Time Stamp	Comments
1	IS&R	L1	17	(("20030010763") or ("6975786") or ("6710292") or ("6115123") or ("6072608") or ("5995251") or ("5959747") or ("5107359") or ("5539543")).PN.	US-PGPUB; USPAT; EPO; DERWENT	2006/05/04 14:08	
2	BRS	L2	5	359/279,9-11,15,22,30,298,559.CCLS. and ((spatial ADJ light ADJ modulator$1) or SLM$1 or modulat$3) SAME phase$1 SAME hologram$1 SAME control$4 SAME (independent$2 or irrespective$2) and (delineat$3 or select$5 or vary$3 or variation$1)	USPAT; EPO; DERWENT	2006/05/04 14:19	
3	BRS	L3	1	385/15-18.CCLS. and ((spatial ADJ light ADJ modulator$1) or SLM$1 or modulat$3) SAME phase$1 SAME hologram$1 SAME control$4 SAME (independent$2 or irrespective$2) and (delineat$3 or select$5 or vary$3 or variation$1)	USPAT; EPO; DERWENT	2006/05/04 14:19	
4	BRS	L4	0	356/457.CCLS. and ((spatial ADJ light ADJ modulator$1) or SLM$1 or modulat$3) SAME phase$1 SAME hologram$1 SAME control$4 SAME (independent$2 or irrespective$2) and (delineat$3 or select$5 or vary$3 or variation$1)	USPAT; EPO; DERWENT	2006/05/04 14:19	

	Type	L #	Hits	Search Text	DBs	Time Stamp	Comments
5	BRS	L5	0	398/79,87.CCLS. and ((spatial ADJ light ADJ modulator$1) or SLM$1 or modulat$3) SAME phase$1 SAME hologram$1 SAME control$4 SAME (independent$2 or irrespective$2) and (delineat$3 or select$5 or vary$3 or variation$1)	USPAT; EPO; DERWENT	2006/05/04 14:20	
6	BRS	L6	0	219/121.73,121.75.CCLS. and ((spatial ADJ light ADJ modulator$1) or SLM$1 or modulat$3) SAME phase$1 SAME hologram$1 SAME control$4 SAME (independent$2 or irrespective$2) and (delineat$3 or select$5 or vary$3 or variation$1)	USPAT; EPO; DERWENT	2006/05/04 14:22	
7	BRS	L7	0	219/121.73,121.75.CCLS. and ((spatial ADJ light ADJ modulator$1) or SLM$1 or modulat$3) SAME phase$1 SAME (hologram$1 or pi or 2pi or modulo or voltage$1) SAME control$4 SAME (independent$2 or irrespective$2) and (delineat$3 or select$5 or vary$3 or variation$1)	USPAT; EPO; DERWENT	2006/05/04 14:22	

UNITED STATES PATENT AND TRADEMARK OFFICE

UNITED STATES DEPARTMENT OF COMMERCE
United States Patent and Trademark Office
Address: COMMISSIONER FOR PATENTS
P.O. Box 1450
Alexandria, Virginia 22313-1450
www.uspto.gov

NOTICE OF ALLOWANCE AND FEE(S) DUE

021005 7590 05/11/2006

HAMILTON, BROOK, SMITH & REYNOLDS, P.C.
530 VIRGINIA ROAD
P.O. BOX 9133
CONCORD, MA 01742-9133

EXAMINER	
BEN, LOHA	
ART UNIT	PAPER NUMBER
2873	

DATE MAILED: 05/11/2006

APPLICATION NO.	FILING DATE	FIRST NAMED INVENTOR	ATTORNEY DOCKET NO.	CONFIRMATION NO.
10/487,810	09/10/2004	Melanie Holmes	3274.1003-000	3616

TITLE OF INVENTION: OPTICAL PROCESSING

APPLN. TYPE	SMALL ENTITY	ISSUE FEE	PUBLICATION FEE	TOTAL FEE(S) DUE	DATE DUE
nonprovisional	YES	$700	$300	$1000	08/11/2006

THE APPLICATION IDENTIFIED ABOVE HAS BEEN EXAMINED AND IS ALLOWED FOR ISSUANCE AS A PATENT. PROSECUTION ON THE MERITS IS CLOSED. THIS NOTICE OF ALLOWANCE IS NOT A GRANT OF PATENT RIGHTS. THIS APPLICATION IS SUBJECT TO WITHDRAWAL FROM ISSUE AT THE INITIATIVE OF THE OFFICE OR UPON PETITION BY THE APPLICANT. SEE 37 CFR 1.313 AND MPEP 1308.

THE ISSUE FEE AND PUBLICATION FEE (IF REQUIRED) MUST BE PAID WITHIN THREE MONTHS FROM THE MAILING DATE OF THIS NOTICE OR THIS APPLICATION SHALL BE REGARDED AS ABANDONED. THIS STATUTORY PERIOD CANNOT BE EXTENDED. SEE 35 U.S.C. 151. THE ISSUE FEE DUE INDICATED ABOVE REFLECTS A CREDIT FOR ANY PREVIOUSLY PAID ISSUE FEE APPLIED IN THIS APPLICATION. THE PTOL-85B (OR AN EQUIVALENT) MUST BE RETURNED WITHIN THIS PERIOD EVEN IF NO FEE IS DUE OR THE APPLICATION WILL BE REGARDED AS ABANDONED.

HOW TO REPLY TO THIS NOTICE:

I. Review the SMALL ENTITY status shown above.

If the SMALL ENTITY is shown as YES, verify your current SMALL ENTITY status:

A. If the status is the same, pay the TOTAL FEE(S) DUE shown above.

B. If the status above is to be removed, check box 5b on Part B - Fee(s) Transmittal and pay the PUBLICATION FEE (if required) and twice the amount of the ISSUE FEE shown above, or

If the SMALL ENTITY is shown as NO:

A. Pay TOTAL FEE(S) DUE shown above, or

B. If applicant claimed SMALL ENTITY status before, or is now claiming SMALL ENTITY status, check box 5a on Part B - Fee(s) Transmittal and pay the PUBLICATION FEE (if required) and 1/2 the ISSUE FEE shown above.

II. PART B - FEE(S) TRANSMITTAL should be completed and returned to the United States Patent and Trademark Office (USPTO) with your ISSUE FEE and PUBLICATION FEE (if required). Even if the fee(s) have already been paid, Part B - Fee(s) Transmittal should be completed and returned. If you are charging the fee(s) to your deposit account, section "4b" of Part B - Fee(s) Transmittal should be completed and an extra copy of the form should be submitted.

III. All communications regarding this application must give the application number. Please direct all communications prior to issuance to Mail Stop ISSUE FEE unless advised to the contrary.

IMPORTANT REMINDER: Utility patents issuing on applications filed on or after Dec. 12, 1980 may require payment of maintenance fees. It is patentee's responsibility to ensure timely payment of maintenance fees when due.

PTOL-85 (Rev. 01/06) Approved for use through 04/30/2007.

PART B - FEE(S) TRANSMITTAL

Complete and send this form, together with applicable fee(s), to: Mail Mail Stop ISSUE FEE
Commissioner for Patents
P.O. Box 1450
Alexandria, Virginia 22313-1450
or Fax (571)-273-2885

INSTRUCTIONS: This form should be used for transmitting the ISSUE FEE and PUBLICATION FEE (if required). Blocks 1 through 5 should be completed where appropriate. All further correspondence including the Patent, advance orders and notification of maintenance fees will be mailed to the current correspondence address as indicated unless corrected below or directed otherwise in Block 1, by (a) specifying a new correspondence address; and/or (b) indicating a separate "FEE ADDRESS" for maintenance fee notifications.

CURRENT CORRESPONDENCE ADDRESS (Note: Use Block 1 for any change of address)

021005 7590 05/11/2006

HAMILTON, BROOK, SMITH & REYNOLDS, P.C.
530 VIRGINIA ROAD
P.O. BOX 9133
CONCORD, MA 01742-9133

Note: A certificate of mailing can only be used for domestic mailings of the Fee(s) Transmittal. This certificate cannot be used for any other accompanying papers. Each additional paper, such as an assignment or formal drawing, must have its own certificate of mailing or transmission.

Certificate of Mailing or Transmission
I hereby certify that this Fee(s) Transmittal is being deposited with the United States Postal Service with sufficient postage for first class mail in an envelope addressed to the Mail Stop ISSUE FEE address above, or being facsimile transmitted to the USPTO (571) 273-2885, on the date indicated below.

(Depositor's name)
(Signature)
(Date)

APPLICATION NO.	FILING DATE	FIRST NAMED INVENTOR	ATTORNEY DOCKET NO.	CONFIRMATION NO.
10/487,810	09/10/2004	Melanie Holmes	3274.1003-000	3616

TITLE OF INVENTION: OPTICAL PROCESSING

APPLN. TYPE	SMALL ENTITY	ISSUE FEE	PUBLICATION FEE	TOTAL FEE(S) DUE	DATE DUE
nonprovisional	YES	$700	$300	$1000	08/11/2006

EXAMINER	ART UNIT	CLASS-SUBCLASS
BEN, LOHA	2873	359-279000

1. Change of correspondence address or indication of "Fee Address" (37 CFR 1.363).
☐ Change of correspondence address (or Change of Correspondence Address form PTO/SB/122) attached.
☐ "Fee Address" indication (or "Fee Address" Indication form PTO/SB/47; Rev 03-02 or more recent) attached. **Use of a Customer Number is required.**

2. For printing on the patent front page, list
(1) the names of up to 3 registered patent attorneys or agents OR, alternatively, 1 _____
(2) the name of a single firm (having as a member a registered attorney or agent) and the names of up to 2 registered patent attorneys or agents. If no name is listed, no name will be printed. 2 _____ 3 _____

3. ASSIGNEE NAME AND RESIDENCE DATA TO BE PRINTED ON THE PATENT (print or type)

PLEASE NOTE: Unless an assignee is identified below, no assignee data will appear on the patent. If an assignee is identified below, the document has been filed for recordation as set forth in 37 CFR 3.11. Completion of this form is NOT a substitute for filing an assignment.

(A) NAME OF ASSIGNEE (B) RESIDENCE: (CITY and STATE OR COUNTRY)

Please check the appropriate assignee category or categories (will not be printed on the patent) : ☐ Individual ☐ Corporation or other private group entity ☐ Government

4a. The following fee(s) are enclosed:
☐ Issue Fee
☐ Publication Fee (No small entity discount permitted)
☐ Advance Order - # of Copies _____

4b. Payment of Fee(s):
☐ A check in the amount of the fee(s) is enclosed.
☐ Payment by credit card. Form PTO-2038 is attached.
☐ The Director is hereby authorized by charge the required fee(s), or credit any overpayment, to Deposit Account Number _____ (enclose an extra copy of this form).

5. **Change in Entity Status** (from status indicated above)
☐ a. Applicant claims SMALL ENTITY status. See 37 CFR 1.27. ☐ b. Applicant is no longer claiming SMALL ENTITY status. See 37 CFR 1.27(g)(2).

The Director of the USPTO is requested to apply the Issue Fee and Publication Fee (if any) or to re-apply any previously paid issue fee to the application identified above. NOTE: The Issue Fee and Publication Fee (if required) will not be accepted from anyone other than the applicant; a registered attorney or agent; or the assignee or other party in interest as shown by the records of the United States Patent and Trademark Office.

Authorized Signature _____ Date _____

Typed or printed name _____ Registration No. _____

This collection of information is required by 37 CFR 1.311. The information is required to obtain or retain a benefit by the public which is to file (and by the USPTO to process) an application. Confidentiality is governed by 35 U.S.C. 122 and 37 CFR 1.14. This collection is estimated to take 12 minutes to complete, including gathering, preparing, and submitting the completed application form to the USPTO. Time will vary depending upon the individual case. Any comments on the amount of time you require to complete this form and/or suggestions for reducing this burden, should be sent to the Chief Information Officer, U.S. Patent and Trademark Office, U.S. Department of Commerce, P.O. Box 1450, Alexandria, Virginia 22313-1450. DO NOT SEND FEES OR COMPLETED FORMS TO THIS ADDRESS. SEND TO: Commissioner for Patents, P.O. Box 1450, Alexandria, Virginia 22313-1450.

Under the Paperwork Reduction Act of 1995, no persons are required to respond to a collection of information unless it displays a valid OMB control number.

UNITED STATES PATENT AND TRADEMARK OFFICE

UNITED STATES DEPARTMENT OF COMMERCE
United States Patent and Trademark Office
Address: COMMISSIONER FOR PATENTS
P.O. Box 1450
Alexandria, Virginia 22313-1450
www.uspto.gov

APPLICATION NO.	FILING DATE	FIRST NAMED INVENTOR	ATTORNEY DOCKET NO.	CONFIRMATION NO.
10/487,810	09/10/2004	Melanie Holmes	3274.1003-000	3616

021005 7590 05/11/2006

HAMILTON, BROOK, SMITH & REYNOLDS, P.C.
530 VIRGINIA ROAD
P.O. BOX 9133
CONCORD, MA 01742-9133

EXAMINER	
BEN, LOHA	
ART UNIT	PAPER NUMBER
2873	

DATE MAILED: 05/11/2006

Determination of Patent Term Adjustment under 35 U.S.C. 154 (b)
(application filed on or after May 29, 2000)

The Patent Term Adjustment to date is 117 day(s). If the issue fee is paid on the date that is three months after the mailing date of this notice and the patent issues on the Tuesday before the date that is 28 weeks (six and a half months) after the mailing date of this notice, the Patent Term Adjustment will be 117 day(s).

If a Continued Prosecution Application (CPA) was filed in the above-identified application, the filing date that determines Patent Term Adjustment is the filing date of the most recent CPA.

Applicant will be able to obtain more detailed information by accessing the Patent Application Information Retrieval (PAIR) WEB site (http://pair.uspto.gov).

Any questions regarding the Patent Term Extension or Adjustment determination should be directed to the Office of Patent Legal Administration at (571)-272-7702. Questions relating to issue and publication fee payments should be directed to the Customer Service Center of the Office of Patent Publication at 1-(888)-786-0101 or (571)-272-4200.

PTOL-85 (Rev. 01/06) Approved for use through 04/30/2007.

H'A

Notice of Allowability	Application No.	Applicant(s)	
	10/487,810	HOLMES, MELANIE	
	Examiner	Art Unit	
	Loha Ben	2873	

-- The MAILING DATE of this communication appears on the cover sheet with the correspondence address--

All claims being allowable, PROSECUTION ON THE MERITS IS (OR REMAINS) CLOSED in this application. If not included herewith (or previously mailed), a Notice of Allowance (PTOL-85) or other appropriate communication will be mailed in due course. **THIS NOTICE OF ALLOWABILITY IS NOT A GRANT OF PATENT RIGHTS.** This application is subject to withdrawal from issue at the initiative of the Office or upon petition by the applicant. See 37 CFR 1.313 and MPEP 1308.

1. ☒ This communication is responsive to *Applicant's papers dated 2/26/2004*.

2. ☒ The allowed claim(s) is/are *1-14*.

3. ☒ Acknowledgment is made of a claim for foreign priority under 35 U.S.C. § 119(a)-(d) or (f).
   a) ☒ All b) ☐ Some* c) ☐ None of the:
      1. ☒ Certified copies of the priority documents have been received.
      2. ☐ Certified copies of the priority documents have been received in Application No. _____ .
      3. ☐ Copies of the certified copies of the priority documents have been received in this national stage application from the International Bureau (PCT Rule 17.2(a)).

   * Certified copies not received: _____.

Applicant has THREE MONTHS FROM THE "MAILING DATE" of this communication to file a reply complying with the requirements noted below. Failure to timely comply will result in ABANDONMENT of this application.
THIS THREE-MONTH PERIOD IS NOT EXTENDABLE.

4. ☐ A SUBSTITUTE OATH OR DECLARATION must be submitted. Note the attached EXAMINER'S AMENDMENT or NOTICE OF INFORMAL PATENT APPLICATION (PTO-152) which gives reason(s) why the oath or declaration is deficient.

5. ☐ CORRECTED DRAWINGS (as "replacement sheets") must be submitted.
   (a) ☐ including changes required by the Notice of Draftsperson's Patent Drawing Review (PTO-948) attached
      1) ☐ hereto or 2) ☐ to Paper No./Mail Date _____.
   (b) ☐ including changes required by the attached Examiner's Amendment / Comment or in the Office action of Paper No./Mail Date _____.

   Identifying indicia such as the application number (see 37 CFR 1.84(c)) should be written on the drawings in the front (not the back) of each sheet. Replacement sheet(s) should be labeled as such in the header according to 37 CFR 1.121(d).

6. ☐ DEPOSIT OF and/or INFORMATION about the deposit of BIOLOGICAL MATERIAL must be submitted. Note the attached Examiner's comment regarding REQUIREMENT FOR THE DEPOSIT OF BIOLOGICAL MATERIAL.

Attachment(s)

1. ☒ Notice of References Cited (PTO-892)
2. ☐ Notice of Draftperson's Patent Drawing Review (PTO-948)
3. ☒ Information Disclosure Statements (PTO-1449 or PTO/SB/08), Paper No./Mail Date 0204;1004
4. ☐ Examiner's Comment Regarding Requirement for Deposit of Biological Material
5. ☐ Notice of Informal Patent Application (PTO-152)
6. ☐ Interview Summary (PTO-413), Paper No./Mail Date _____ .
7. ☒ Examiner's Amendment/Comment
8. ☒ Examiner's Statement of Reasons for Allowance
9. ☐ Other _____.

EXAMINER'S AMENDMENT

An examiner's amendment to the record appears below. Should the changes and/or additions be unacceptable to applicant, an amendment may be filed as provided by 37 CFR 1.312. To ensure consideration of such an amendment, it MUST be submitted no later than the payment of the issue fee.

The application has been amended as follows:

In the Specification

Page 27, line 29, and page 29, line 9, "aluminium" has been replaced with – aluminum --.

In the Claims

In claim 12: line 3, "sensors" has been replaced with – sensor devices – to be consistent with line one of the claim.

In claim 14: line 12, after "arranged", "," has been deleted; and line 13, after "data", -- , -- has been inserted (see claim 11).

Claims 15-28 are non-elected claims as a result of a reply to the Restriction Requirement dated March 7, 2006. Therefore, claims 15-28 have been cancelled in order to pass the present case to issue.

REASONS FOR ALLOWANCE

The following is an examiner's statement of reasons for allowance: Best reference noted appears to be Amako et al. However, Amako et al's invention, having **a phase modulation-type liquid crystal spatial light modulator** that is used to control the **wavefront of a light** emitted from a light source to produce a plurality of image

patterns on an object material, is **for reproducing an original image** through utilizing an electric processing means which sequentially generates a plurality of computer hologram data groups to the spatial light modulator, with each of the data group representing an image frame. The device of the present invention, on the other hand, has **a two-dimensional array of controllable phase-modulating elements delineated in groups** by a control circuit, wherein each group receives a respective hologram generated by a control data selected from stored control data of the control circuit, which circuit is constructed and arranged to vary the delineation of all the groups and/or the selection of the control data, whereby, upon illumination of the groups by respective light beams, respective light beams emerging from the groups are controllable independently of each other.

Any comments considered necessary by applicant must be submitted no later than the payment of the issue fee and, to avoid processing delays, should preferably accompany the issue fee. Such submissions should be clearly labeled "Comments on Statement of Reasons for Allowance."

Any inquiry concerning this communication or earlier communications from the examiner should be directed to Loha Ben whose telephone number is (571) 272-2323. The examiner can normally be reached on Monday to Saturday, generally between 12:00 noon to 8:00 p.m.

If attempts to reach the examiner by telephone are unsuccessful, the examiner's supervisor, Ricky Mack, can be reached on Monday to Friday, at (571) 272-2333. The

fax phone number for the organization where this application or proceeding is assigned is 571-273-8300.

Information regarding the status of an application may be obtained from the Patent Application Information Retrieval (PAIR) system. Status information for published applications may be obtained from either Private PAIR or Public PAIR. Status information for unpublished applications is available through Private PAIR only. For more information about the PAIR system, see http://pair-direct.uspto.gov. Should you have questions on access to the Private PAIR system, contact the Electronic Business Center (EBC) at 866-217-9197 (toll-free).

May 6, 2006

Loha Ben
Primary Examiner

Search Notes

Application/Control No.	Applicant(s)/Patent under Reexamination
10/487,810	HOLMES, MELANIE
Examiner	**Art Unit**
Loha Ben	2873

SEARCHED			
Class	Subclass	Date	Examiner
359	9--11	5/4/2006	LB
	15; 24		
	22; 30		
	559; 298		
	279		
385	15--18		
219	121.73		
	121.75		
398	79; 87		
356	457		

INTERFERENCE SEARCHED			
Class	Subclass	Date	Examiner
PGPUB: See Interference Search History Printout		5/4/2006	LB

SEARCH NOTES (INCLUDING SEARCH STRATEGY)		
	DATE	EXMR
WEST: See Search History Printout	5/4/2006	LB
EAST: See Search History Printout	5/4/2006	LB

Issue Classification	Application/Control No.	Applicant(s)/Patent under Reexamination	
	10/487,810	HOLMES, MELANIE	
	Examiner	Art Unit	
	Loha Ben	2873	

ISSUE CLASSIFICATION

ORIGINAL						CROSS REFERENCE(S)								
CLASS				SUBCLASS	CLASS	SUBCLASS (ONE SUBCLASS PER BLOCK)								
359				279	359	9	11	15	298					
INTERNATIONAL CLASSIFICATION					385	15	16	17						
G	0	2	F	1/01	219	121.73	121.75							
G	0	2	F	1/29										
G	0	3	H	1/12										
G	0	2	B	6/26										
B	2	3	K	26/06										

(Assistant Examiner) (Date)

(Legal Instruments Examiner) (Date) 5/10/06

Loha Ben
Primary Examiner
(Primary Examiner) (Date) 5/6/06

Total Claims Allowed: 14

O.G. Print Claim(s)	O.G. Print Fig.
11	1 & 2

☐ Claims renumbered in the same order as presented by applicant ☐ CPA ☐ T.D. ☐ R.1.47

Final	Original	Final	Original	Final	Original	Final	Original	Final	Original	Final	Original	Final	Original
1	1		31		61		91		121		151		181
2	2		32		62		92		122		152		182
3	3		33		63		93		123		153		183
5	4		34		64		94		124		154		184
6	5		35		65		95		125		155		185
7	6		36		66		96		126		156		186
8	7		37		67		97		127		157		187
9	8		38		68		98		128		158		188
10	9		39		69		99		129		159		189
4	10		40		70		100		130		160		190
11	11		41		71		101		131		161		191
12	12		42		72		102		132		162		192
13	13		43		73		103		133		163		193
14	14		44		74		104		134		164		194
	~~15~~		45		75		105		135		165		195
	~~16~~		46		76		106		136		166		196
	~~17~~		47		77		107		137		167		197
	~~18~~		48		78		108		138		168		198
	~~19~~		49		79		109		139		169		199
	~~20~~		50		80		110		140		170		200
	~~21~~		51		81		111		141		171		201
	~~22~~		52		82		112		142		172		202
	~~23~~		53		83		113		143		173		203
	~~24~~		54		84		114		144		174		204
	~~25~~		55		85		115		145		175		205
	~~26~~		56		86		116		146		176		206
	~~27~~		57		87		117		147		177		207
	~~28~~		58		88		118		148		178		208
	29		59		89		119		149		179		209
	30		60		90		120		150		180		210

UNITED STATES PATENT AND TRADEMARK OFFICE

UNITED STATES DEPARTMENT OF COMMERCE
United States Patent and Trademark Office
Address: COMMISSIONER FOR PATENTS
P.O. Box 1450
Alexandria, Virginia 22313-1450
www.uspto.gov

Bib Data Sheet

CONFIRMATION NO. 3616

SERIAL NUMBER	FILING DATE	CLASS	GROUP ART UNIT	ATTORNEY DOCKET NO.
10/487,810	09/10/2004 RULE	359	2873	3274.1003-000

APPLICANTS

Melanie Holmes, Ipswich, UNITED KINGDOM;

** CONTINUING DATA **********

This application is a 371 of PCT/GB02/04011 09/02/2002

** FOREIGN APPLICATIONS **********

UNITED KINGDOM 01213081 09/03/2001

** SMALL ENTITY **

Foreign Priority claimed	STATE OR	SHEETS	TOTAL	INDEPENDENT
☑ yes ☐ no	COUNTRY	DRAWING	CLAIMS	CLAIMS
35 USC 119 (a-d) conditions met ☑ yes ☐ no ☐ Met after Allowance	UNITED KINGDOM	36	~~28~~ 14	~~12~~ 3
Verified and Acknowledged Examiner's Signature Initials				

ADDRESS
021005
HAMILTON, BROOK, SMITH & REYNOLDS, P.C.
530 VIRGINIA ROAD
P.O. BOX 9133
CONCORD , MA
01742-9133

TITLE
Optical processing

FILING FEE	FEES: Authority has been given in Paper	☐ All Fees
RECEIVED 1027	No. _____ to charge/credit DEPOSIT ACCOUNT No. _____ for following:	☐ 1.16 Fees (Filing) ☐ 1.17 Fees (Processing Ext. of time) ☐ 1.18 Fees (Issue)

		☐ Other _____
		☐ Credit

TS0001148

Index of Claims

Application/Control No.	Applicant(s)/Patent under Reexamination
10/487,810	HOLMES, MELANIE
Examiner	**Art Unit**
Loha Ben	2873

√	Rejected	–	(Through numeral) Cancelled	N	Non-Elected	A	Appeal
=	Allowed	÷	Restricted	I	Interference	O	Objected

Claim		Date								
Final	Original	5/6/06								
1	1	=								
2	2	=								
3	3	=								
5	4	=								
6	5	=								
7	6	=								
8	7	=								
9	8	=								
10	9	=								
4	10	=								
11	11	=								
12	12	=								
13	13	=								
14	14	=								
	15									
	16									
	17									
	18									
	19									
	20									
	21									
	22									
	23									
	24									
	25									
	26									
	27									
	28									
	29									
	30									
	31									
	32									
	33									
	34									
	35									
	36									
	37									
	38									
	39									
	40									
	41									
	42									
	43									
	44									
	45									
	46									
	47									
	48									
	49									
	50									

Claim		Date								
Final	Original									
	51									
	52									
	53									
	54									
	55									
	56									
	57									
	58									
	59									
	60									
	61									
	62									
	63									
	64									
	65									
	66									
	67									
	68									
	69									
	70									
	71									
	72									
	73									
	74									
	75									
	76									
	77									
	78									
	79									
	80									
	81									
	82									
	83									
	84									
	85									
	86									
	87									
	88									
	89									
	90									
	91									
	92									
	93									
	94									
	95									
	96									
	97									
	98									
	99									
	100									

Claim		Date								
Final	Original									
	101									
	102									
	103									
	104									
	105									
	106									
	107									
	108									
	109									
	110									
	111									
	112									
	113									
	114									
	115									
	116									
	117									
	118									
	119									
	120									
	121									
	122									
	123									
	124									
	125									
	126									
	127									
	128									
	129									
	130									
	131									
	132									
	133									
	134									
	135									
	136									
	137									
	138									
	139									
	140									
	141									
	142									
	143									
	144									
	145									
	146									
	147									
	148									
	149									
	150									

Notice of References Cited	Application/Control No. 10/487,810	Applicant(s)/Patent Under Reexamination HOLMES, MELANIE	
	Examiner Loha Ben	Art Unit 2873	Page 1 of 1

U.S. PATENT DOCUMENTS

*		Document Number Country Code-Number-Kind Code	Date MM-YYYY	Name	Classification
*	A	US-5,589,955	12-1996	Amako et al.	359/9
*	B	US-5,428,466	06-1995	Rejman-Greene et al.	359/15
*	C	US-4,952,010	08-1990	Healey et al.	359/11
*	D	US-6,710,292 B2	03-2004	Fukuchi et al.	219/121.73
*	E	US-6,975,786 B1	12-2005	Warr et al.	385/17
*	F	US-6,115,123	09-2000	Stappaerts et al.	356/457
*	G	US-5,995,251	11-1999	Hesselink et al.	359/30
*	H	US-5,959,747	09-1999	Psaltis et al.	359/22
*	I	US-6,072,608	06-2000	Psaltis et al.	359/22
	J	US-			
	K	US-			
	L	US-			
	M	US-			

FOREIGN PATENT DOCUMENTS

*		Document Number Country Code-Number-Kind Code	Date MM-YYYY	Country	Name	Classification
	N					
	O					
	P					
	Q					
	R					
	S					
	T					

NON-PATENT DOCUMENTS

*		Include as applicable: Author, Title Date, Publisher, Edition or Volume, Pertinent Pages)
	U	
	V	
	W	
	X	

*A copy of this reference is not being furnished with this Office action. (See MPEP § 707.05(a).)
Dates in MM-YYYY format are publication dates. Classifications may be US or foreign.

PTO-1449 REPRODUCED	ATTORNEY DOCKET NO.	APPLICATION NO.
INFORMATION DISCLOSURE CITATION IN AN APPLICATION	3274.1003-000	10/487,810
September 30, 2004	FIRST NAMED INVENTOR: Melanie Holmes	371(c) FILING DATE: September 10, 2004
(Use several sheets if necessary)	EXAMINER: ~~N/A.~~ LOHA BEN	CONFIRMATION NO.: 3616 / GROUP: ~~N/A.~~ AU 2873

		OTHER DOCUMENTS *(Including Author, Title, Date, Pertinent Pages, Etc.)*
	AU	Marom, D.M., *et al.*, "Wavelength-Selective 1x4 Switch for 128 WDM Channels at 50 Ghz Spacing," *OFC Postdeadline Paper*, pp. FB7-1-FB7-3 (2002).
	AV	
	AW	
	AX	
	AY	
	AZ	
	AR2	
	AS2	
	AT2	
	AU2	
	AV2	
	AW2	
	AX2	
	AY2	

OIPE JC105 OCT 04 2004 PATENT & TRADEMARK OFFICE

EXAMINER	DATE CONSIDERED
LOHA BEN	5/4/06

PTO-1449 REPRODUCED	ATTORNEY DOCKET NO. 3274.1003-000	APPLICATION NO. 10/487810
INFORMATION DISCLOSURE CITATION IN AN APPLICATION	FIRST NAMED INVENTOR Melanie Holmes	FILING DATE 9/10/2004
February 25, 2004 (Use several sheets if necessary)	EXAMINER LOHA BEN	CONFIRMATION NO. / GROUP AU2873

U.S. PATENT DOCUMENTS

EXAMINER INITIAL	REF. NO.	DOCUMENT NUMBER Number-Kind Code (if known)	ISSUE DATE / PUBLICATION DATE MM-DD-YYYY	NAME OF PATENTEE OR APPLICANT OF CITED DOCUMENT
LB	AA	5,107,359	04-21-92	Ohuchida
LB	AB	5,539,543	07-23-96	Liu, et al.
	AC			
	AD			
	AE			
	AF			
	AG			
	AH			
	AI			
	AJ			
	AK			
	AA2			
	AB2			
	AC2			
	AD2			
	AE2			
	AF2			
	AG2			
	AH2			
	AI2			
	AJ2			
	AK2			
	AA3			
	AB3			
	AC3			

EXAMINER LOHA BEN	DATE CONSIDERED 5/4/06

@PFDesktop\::ODMA/MHODMA/HBSR05;iManage;455966;1

PTO-1449 REPRODUCED	ATTORNEY DOCKET NO. 3274.1003-000	APPLICATION NO. 10/487810
INFORMATION DISCLOSURE CITATION IN AN APPLICATION February 25, 2004 (Use several sheets if necessary)	FIRST NAMED INVENTOR Melanie Holmes	FILING DATE 9/10/2004
	EXAMINER LOHA BEN	CONFIRMATION NO. / GROUP AU2873

FOREIGN PATENT DOCUMENTS

		DOCUMENT NUMBER Country Code-Number-Kind Code (if known)	DATE MM-DD-YYYY	NAME OF PATENTEE OR APPLICANT OF CITED DOCUMENT	TRANSLATION YES	TRANSLATION NO
LH	AL	WO 01 90823 A1	11-29-01	Intelligent Pixels, Inc.		
	AM	WO 01 25848 A2	04-12-01	Thomas Swan & Co., Ltd.		
	AN	WO 01 25840 A1	04-12-01	Thomas Swan & Co., Ltd.		
	AO	WO 02 101451 A1	12-19-02	Honeywell International, Inc.		
	AP	WO 02 079870 A2	10-10-02	Thomas Swan & Co., Ltd.		
	AQ	EP 1 050 775 A1	11-08-00	Thomas Swan & Co., Ltd.		
LH	AL2	EP 1 053 501 B1	07-23-03	Thomas Swan & Co., Ltd.		
	AM2					
	AN2					
	AO2					
	AP2					
	AQ2					
	AL3					
	AM3					
	AN3					
	AO3					
	AP3					
	AQ3					
	AL4					
	AM4					
	AN4					
	AO4					
	AP4					
	AQ4					

EXAMINER LOHA BEN	DATE CONSIDERED 5/4/06

@PFDesktop\::ODMA/MHODMA/HBSR05;iManage;455966;1

DT12 Rec'd PCT/PTO 26 FEB 2004

PTO-1449 REPRODUCED	ATTORNEY DOCKET NO. 3274.1003-000	APPLICATION NO. 10/487810
INFORMATION DISCLOSURE CITATION IN AN APPLICATION	FIRST NAMED INVENTOR Melanie Holmes	FILING DATE 9/10/2004
February 25, 2004 (Use several sheets if necessary)	EXAMINER LOHA BEN	CONFIRMATION NO. / GROUP AU 2873

		OTHER DOCUMENTS *(Including Author, Title, Date, Pertinent Pages, Etc.)*
Hy	AR	Mears, R. J., et al., "Telecommunications Applications of Ferroelectric Liquid-Crystal Smart Pixels," IEEE Journal of Selected Topics in Quantum Electronics, Vol. 2, No. 1, April 1996, pp. 35-46.
Hy	AS	Mears, R. J., et al., "WDM Channel Management Using Programmable Holographic Elements," IEE Colloquim on Multiwavelength Optical Networks: Devices, Systems and Network Implementations," IEE, London, GB, 18 June 1998, pp. 11-1 - 11-6.
Hy	AT	Pan, Ci-Ling, et al., "Tunable Semiconductor Laser with Liquid Crystal Pixel Mirror in Grating-Loaded External Cavity," Electronics Letters, IEE Stevenage, GB, Vol. 35, No. 17, 19 August 1999, pp. 1472-1473.
	AU	
	AV	
	AW	
	AX	
	AY	
	AZ	
	AR2	
	AS2	
	AT2	
	AU2	
	AV2	
	AW2	
	AY2	

EXAMINER LOHA BEN	DATE CONSIDERED 5/4/06

@PFDesktop\::ODMA/MHODMA/HBSR05;iManage;455966;1

PART B - FEE(S) TRANSMITTAL

OTPE JUL 31 2006 PATENT & TRADEMARK OFFICE

Complete and send this form, together with applicable fee(s), to: Mail Mail Stop ISSUE FEE
Commissioner for Patents
P.O. Box 1450
Alexandria, Virginia 22313-1450
or Fax (571)-273-2885

INSTRUCTIONS: This form should be used for transmitting the ISSUE FEE and PUBLICATION FEE (if required). Blocks 1 through 5 should be completed where appropriate. All correspondence including the Patent, advance orders and notification of maintenance fees will be mailed to the current correspondence address as indicated unless corrected below or directed otherwise in Block 1, by (a) specifying a new correspondence address; and/or (b) indicating a separate "FEE ADDRESS" for maintenance fee notifications.

CURRENT CORRESPONDENCE ADDRESS (Note: Use Block 1 for any change of address)

021005 7590 05/11/2006

HAMILTON, BROOK, SMITH & REYNOLDS, P.C.
530 VIRGINIA ROAD
P.O. BOX 9133
CONCORD, MA 01742-9133
08/01/2006 DTESSEM2 00000001 10487810

01 FC:1501 1400.00 OP
02 FC:1504 300.00 OP
03 FC:8001 45.00 OP

Note: A certificate of mailing can only be used for domestic mailings of the Fee(s) Transmittal. This certificate cannot be used for any other accompanying papers. Each additional paper, such as an assignment or formal drawing, must have its own certificate of mailing or transmission.

Certificate of Mailing or Transmission
I hereby certify that this Fee(s) Transmittal is being deposited with the United States Postal Service with sufficient postage for first class mail in an envelope addressed to the Mail Stop ISSUE FEE address above, or being facsimile transmitted to the USPTO (571) 273-2885, on the date indicated below.

Julie Kertyzak	(Depositor's name)
Julie Kertyzak	(Signature)
7/27/06	(Date)

APPLICATION NO.	FILING DATE	FIRST NAMED INVENTOR	ATTORNEY DOCKET NO.	CONFIRMATION NO.
10/487,810	09/10/2004	Melanie Holmes	3274.1003-000	3616

TITLE OF INVENTION: OPTICAL PROCESSING

APPLN. TYPE	SMALL ENTITY	ISSUE FEE	PUBLICATION FEE	TOTAL FEE(S) DUE	DATE DUE
nonprovisional	~~YES~~ NO	~~$700~~ $1400	$300	$1700	08/11/2006

EXAMINER	ART UNIT	CLASS-SUBCLASS
BEN, LOHA	2873	359-279000

1. Change of correspondence address or indication of "Fee Address" (37 CFR 1.363).
- ☐ Change of correspondence address (or Change of Correspondence Address form PTO/SB/122) attached.
- ☐ "Fee Address" indication (or "Fee Address" Indication form PTO/SB/47; Rev 03-02 or more recent) attached. **Use of a Customer Number is required.**

2. For printing on the patent front page, list
(1) the names of up to 3 registered patent attorneys or agents OR, alternatively,
(2) the name of a single firm (having as a member a registered attorney or agent) and the names of up to 2 registered patent attorneys or agents. If no name is listed, no name will be printed.

1 Hamilton, Brook, Smith & Reynolds, P.C.
2
3

3. ASSIGNEE NAME AND RESIDENCE DATA TO BE PRINTED ON THE PATENT (print or type)

PLEASE NOTE: Unless an assignee is identified below, no assignee data will appear on the patent. If an assignee is identified below, the document has been filed for recordation as set forth in 37 CFR 3.11. Completion of this form is NOT a substitute for filing an assignment.

(A) NAME OF ASSIGNEE: Thomas Swan & Co Ltd.

(B) RESIDENCE: (CITY and STATE OR COUNTRY): United Kingdom

Please check the appropriate assignee category or categories (will not be printed on the patent) : ☐ Individual ☒ Corporation or other private group entity ☐ Government

4a. The following fee(s) are enclosed:
- ☒ Issue Fee
- ☒ Publication Fee (No small entity discount permitted)
- ☒ Advance Order - # of Copies 15

4b. Payment of Fee(s):
- ☒ A check in the amount of the fee(s) is enclosed.
- ☐ Payment by credit card. Form PTO-2038 is attached.
- ☒ The Director is hereby authorized ~~by charge the required fee(s), or credit any overpayment~~ to charge any deficiency to Deposit Account Number 08-0380 (enclose an extra copy of this form).

5. **Change in Entity Status** (from status indicated above)
- ☐ a. Applicant claims SMALL ENTITY status. See 37 CFR 1.27.
- ☒ b. Applicant is no longer claiming SMALL ENTITY status. See 37 CFR 1.27(g)(2).

The Director of the USPTO is requested to apply the Issue Fee and Publication Fee (if any) or to re-apply any previously paid issue fee to the application identified above.
NOTE: The Issue Fee and Publication Fee (if required) will not be accepted from anyone other than the applicant; a registered attorney or agent; or the assignee or other party in interest as shown by the records of the United States Patent and Trademark Office.

Authorized Signature _____ Date 7/27/6

Typed or printed name Timothy J. Meagher Registration No. 39,302

This collection of information is required by 37 CFR 1.311. The information is required to obtain or retain a benefit by the public which is to file (and by the USPTO to process) an application. Confidentiality is governed by 35 U.S.C. 122 and 37 CFR 1.14. This collection is estimated to take 12 minutes to complete, including gathering, preparing, and submitting the completed application form to the USPTO. Time will vary depending upon the individual case. Any comments on the amount of time you require to complete this form and/or suggestions for reducing this burden, should be sent to the Chief Information Officer, U.S. Patent and Trademark Office, U.S. Department of Commerce, P.O. Box 1450, Alexandria, Virginia 22313-1450. DO NOT SEND FEES OR COMPLETED FORMS TO THIS ADDRESS. SEND TO: Commissioner for Patents, P.O. Box 1450, Alexandria, Virginia 22313-1450.

Under the Paperwork Reduction Act of 1995, no persons are required to respond to a collection of information unless it displays a valid OMB control number.

JUL 31 2006 PATENT & TRADEMARK OFFICE

IN THE UNITED STATES PATENT AND TRADEMARK OFFICE

Applicant: Melanie Holmes

Application No.: 10/487,810 Group: 2873

372(c) Filing Date: September 10, 2004 Examiner: L. Ben

Confirmation No.: 3616

For: OPTICAL PROCESSING

CERTIFICATE OF MAILING OR TRANSMISSION

I hereby certify that this correspondence is being deposited with the United States Postal Service with sufficient postage as First Class Mail in an envelope addressed to Commissioner for Patents, P.O. Box 1450, Alexandria, VA 22313-1450, or is being facsimile transmitted to the United States Patent and Trademark Office on:

7/27/06 Julie Kertyzak

Date Signature

Julie Kertyzak

Typed or printed name of person signing certificate

NOTIFICATION OF REQUEST FOR REMOVAL OF SMALL ENTITY STATUS

Mail Stop ISSUE FEE
Commissioner for Patents
P.O. Box 1450
Alexandria, VA 22313-1450

Sir:

Applicant requests removal of small entity status for this application pursuant to 37 C.F.R. § 1.27(g)(2).

Respectfully submitted,

HAMILTON, BROOK, SMITH & REYNOLDS, P.C.

By _____
Timothy J. Meagher
Registration No. 39,302
Telephone: (978) 341-0036
Facsimile: (978) 341-0136

Concord, MA 01742-9133
Date: 7/27/6

UNITED STATES PATENT AND TRADEMARK OFFICE

UNITED STATES DEPARTMENT OF COMMERCE
United States Patent and Trademark Office
Address: COMMISSIONER FOR PATENTS
P.O. Box 1450
Alexandria, Virginia 22313-1450
www.uspto.gov

BIBDATASHEET

Bib Data Sheet

CONFIRMATION NO. 3616

SERIAL NUMBER	FILING OR 371(c) DATE	CLASS	GROUP ART UNIT	ATTORNEY DOCKET NO.
10/487,810	09/10/2004 RULE	359	2873	3274.1003-000

APPLICANTS

Melanie Holmes, Ipswich, UNITED KINGDOM;

**** CONTINUING DATA ***************************

This application is a 371 of PCT/GB02/04011 09/02/2002

**** FOREIGN APPLICATIONS *********************

UNITED KINGDOM 01213081 09/03/2001

Foreign Priority claimed	STATE OR COUNTRY	SHEETS DRAWING	TOTAL CLAIMS	INDEPENDENT CLAIMS
☐ yes ☐ no 35 USC 119 (a-d) conditions met ☐ yes ☐ no ☐ Met after Allowance Verified and Acknowledged _____ Examiner's Signature Initials	UNITED KINGDOM	36	28	13

ADDRESS
021005

TITLE

OPTICAL PROCESSING

FILING FEE RECEIVED		
1327	FEES: Authority has been given in Paper No. _____ to charge/credit DEPOSIT ACCOUNT No. _____ for following:	☐ All Fees ☐ 1.16 Fees (Filing) ☐ 1.17 Fees (Processing Ext. of time) ☐ 1.18 Fees (Issue) ☐ Other _____ ☐ Credit

OIPE IAP69 OCT 12 2006 PATENT & TRADEMARK OFFICE

COPY FOR CONTINUING APPLICATION **COPY**

DOCKET NO. 3274.1003-000

IN THE UNITED STATES PATENT AND TRADEMARK OFFICE

Declaration for Patent Application

[ ] Supplemental (37 C.F.R. §1.67)

As a named inventor, I hereby declare that:

My residence, mailing address and citizenship are as stated next to my name;

I believe I am the original, first and sole inventor (if only one name is listed) or an original, first and joint inventor (if plural names are listed in the signatory page(s) commencing at page 2 hereof) of the subject matter which is claimed and for which a patent is sought on the invention entitled

OPTICAL PROCESSING

the specification of which (check one)

[ ] is attached hereto.

[ ] was filed on [ ] as United States Application Number [ ].

[X] was filed on 2 September 2002 as PCT International Application No. PCT/GB02/04011 and assigned United States Application No. **10/487,810**.

[ ] and was amended on [ ] (if applicable).

I hereby state that I have reviewed and understand the contents of the above-identified specification, including the claims, as amended by any amendment referred to above.

I acknowledge the duty to disclose information which is material to patentability as defined in 37 C.F.R. §1.56, including for continuation-in-part applications, material information which became available between the filing date of the prior application and the national or PCT international filing date of the continuation-in-part application.

I hereby claim foreign priority benefits under 35 U.S.C. 119 or 365 of any foreign application(s) for patent or inventor's certificate, or of any PCT international application which designated at least one country other than the United States of America, listed below and have also identified below, by checking the box, any foreign application for patent or inventor's certificate, or of any PCT international application having a filing date before that of the application on which priority is claimed:

Prior Foreign Application(s)			Priority Not Claimed	Certified Copy Filed? YES	NO
0121308.1 (Number)	Great Britain (Country)	03/September/2001 (Day/Month/Year filed)	[ ]	[ ]	[X]
(Number)	(Country)	(Day/Month/Year filed)	[ ]	[ ]	[ ]

I hereby declare that all statements made herein of my own knowledge are true and that all statements made on information and belief are believed to be true; and further that these statements were made with the knowledge that willful false statements and the like so made are punishable by fine or imprisonment, or both, under Section 1001 of Title 18 of the United States Code and that such willful false statements may jeopardize the validity of the application or any patent issued thereon.

Full name of sole or first inventor: Melanie Holmes

Inventor's Signature: Melanie Holmes Date: 20.08.04

Residence: 39 Orford Street
Ipswich IP1 3PE Great Britain

Citizenship: Great Britain

Mailing Address: Same as above

@PFDesktop\::ODMA/MHODMA/HBSR05;iManage;459016;1

OIPE
OCT 12 2006
PATENT & TRADEMARK OFFICE

HAMILTON, BROOK, SMITH & REYNOLDS, P.C. **COPY**

COPY FOR CONTINUING APPLICATION

POWER OF ATTORNEY OR AUTHORIZATION OF AGENT AND CORRESPONDENCE ADDRESS

Application Number	10/487,810
International Filing Date	2 September 2002
First Named Inventor	Melanie Holmes
Confirmation Number	
Group Art Unit	
Examiner Name	
Attorney Docket Number	3274.1003-000

Title OPTICAL PROCESSING

I/We hereby appoint

[X] the attorneys/agents associated with **Customer No. 021005**

[ ] Practitioner(s) named below:

as my/our attorneys/agents to prosecute the application identified above, including any continuation or divisional applications thereof, and to transact all business in the United States Patent and Trademark Office connected therewith.

The correspondence address for the above-identified application is:

[X] Customer Number 021005

Hamilton, Brook, Smith & Reynolds, P.C.
530 Virginia Road
P.O. Box 9133
Concord, Massachusetts 01742-9133

[ ] Other

Please direct all telephone calls and facsimiles to:

Name Timothy J. Meagher, Esq. Tel. No. 978-341-0036 Fax No. 978-341-0136

I am the:

[ ] Applicant/Inventor.

[X] Authorized representative of the Assignee, Thomas Swan & Co. Ltd., of the entire interest. See 37 C.F.R. § 3.71. A Statement under 37 C.F.R. §3.73(b) is enclosed.

[ ] Authorized representative of the Assignee, [ ], together with [ ], of the entire interest. A Statement under 37 C.F.R. § 3.73(b) is enclosed.

SIGNATURE of Applicant or Assignee of Record

Name & Title	IAN BONAS DIRECTOR
Signature	IGBon
Date	2 SEPTEMBER 2004

@PFDesktop\::ODMA/MHODMA/HBSR05;iManage;459090;1

OIPE IAP69
OCT 12 2006
PATENT & TRADEMARK OFFICE

COPY FOR CONTINUING APPLICATION

COPY

Docket No. 3274.1003-000

STATEMENT UNDER 37 C.F.R. § 3.73(b)

Inventor(s): Melanie Holmes

Application No./Patent No.: 10/487,810 International Filing Date: 2 September 2002

For: OPTICAL PROCESSING

Thomas Swan & Co. Ltd. (Name of Assignee), a corporation (Type of Assignee, e.g., corporation, partnership, university, government agency, etc.),

states that it is

A. [X] the assignee of the entire right, title and interest in the patent application identified above; or

B. [ ] an assignee together with [ ] of the entire right, title and interest in the patent application identified above.

The right, title and interest of the above-named assignee in the patent application identified above is established by virtue of:

A. [X] An assignment from the inventor(s) of the patent application identified above. The assignment was recorded in the Patent and Trademark Office at Reel _____, Frame _____, or a copy thereof is attached.

OR

B. [ ] A chain of title from the inventor(s) of the patent application identified above, to the current assignee as shown below:

1. From: _____ To: _____
The document was recorded in the United States Patent and Trademark Office at Reel _____, Frame _____, or a copy thereof is attached.

2. From: _____ To: _____
The document was recorded in the United States Patent and Trademark Office at Reel _____, Frame _____, or a copy thereof is attached.

3. From: _____ To: _____
The document was recorded in the United States Patent and Trademark Office at Reel _____, Frame _____, or a copy thereof is attached.

[ ] Additional documents in the chain of title are listed on a supplemental sheet.

The undersigned (whose title is supplied below) is authorized to act on behalf of the assignee.

Date: 2 SEPTEMBER 2006

Name: IAN BONAS

Title: DIRECTOR

Signature: IGBy

@PFDesktop\:ODMA/MHODMA/HBSR05;iManage;459100;1

COPY

NOT FOR RECORDATION

Docket No. 3274.1003-000

Solc

ASSIGNMENT

WHEREAS, I, **Melanie Holmes**, have invented a certain improvement in **Optical Processing**, described in an application for Patent,

[ ] the specification of which is being executed on even date herewith and is about to be filed in the United States Patent Office *(use for 37 CFR §1.53(b) filings only)*;

[ ] is about to be filed in the United States Patent Office as a Provisional Application;

[ ] the specification of which is United States Application No.[ ], filed [ ];

[X] the specification of which is a Patent Cooperation Treaty Application, International Application No: **PCT/GB02/04011**, which designates the United States of America;

[ ] which was patented under United States Patent No. [ ].

WHEREAS, **Thomas Swan & Co. Ltd.** (hereinafter "ASSIGNEE"), a corporation organized and existing under the laws of the United Kingdom, and having a usual place of business at **Crookhall, Consett, Co. Durham DH8 7ND, United Kingdom,** desires to acquire an interest therein in accordance with agreements duly entered into with me;

NOW, THEREFORE, to all whom it may concern be it known that for and in consideration of said agreements and of other good and valuable consideration, the receipt of which is hereby acknowledged, I have sold, assigned and transferred and by these presents do hereby sell, assign and transfer unto said ASSIGNEE, its successors, assigns and legal representatives, the entire right, title and interest in and throughout the United States of America, its territories and all foreign countries, in and to said invention as described in said application, together with the entire right, title and interest in and to said application and such Letters Patent as may issue on said invention; said invention, application and Letters Patent to be held and enjoyed by said ASSIGNEE for its own use and behalf and for its successors, assigns and legal representatives, to the full end of the term for which said Letters Patent may be granted as fully and entirely as the same would have been held by me had this assignment and sale not been made; I hereby convey all rights arising under or pursuant to any and all international agreements, treaties or laws relating to the protection of industrial property by filing any such applications for Letters Patent. I hereby acknowledge that this assignment, being of the entire right, title and interest in and to said invention, carries with it the right in ASSIGNEE to apply for and obtain from competent authorities in all countries of the world any and all Letters Patent by attorneys and agents of ASSIGNEE's selection and the right to procure the grant of all such Letters Patent to ASSIGNEE for its own name as assignee of the entire right, title and interest therein;

AND, I hereby further agree for myself and my executors and administrators to execute upon request any other lawful documents and likewise to perform any other lawful acts which may be deemed necessary to secure fully the aforesaid invention to said ASSIGNEE, its successors, assigns and legal representatives, but at its or their expense and charges, including the

execution of applications for patents in foreign countries, and the execution of any further applications including substitution, reissue, divisional or continuation applications, and preliminary or other statements and the giving of testimony in any interference or other proceeding in which said invention or any application or patent directed thereto may be involved;

AND, I do hereby authorize and request each Patent Office and the Commissioner of Patents of the United States to issue such Letters Patent as shall be granted upon said invention to said ASSIGNEE, its successors, assigns, and legal representatives.

Inventor Melanie Holmes Date 20.08.04
Melanie Holmes

Address 39 Orford Street
Ipswich IP1 3PE Great Britain

Witness ARISTODIMOS KOURIS

Address 57 ROCEMILL END WILLINGHAM,
CAMBRIDGE, CB4 5HY

Witness JASON REICH

Address 109 ~~[illegible]~~ KINGS HEDGES RD
CAMBRIDGE, CB4 2PL

@PFDesktop\::ODMA/MHODMA/HBSR03::Manage;459060;1

UNITED STATES PATENT AND TRADEMARK OFFICE

UNITED STATES DEPARTMENT OF COMMERCE
United States Patent and Trademark Office
Address: COMMISSIONER FOR PATENTS
P.O. Box 1450
Alexandria, Virginia 22313-1450
www.uspto.gov

APPLICATION NUMBER	FILING OR 371 (c) DATE	FIRST NAMED APPLICANT	ATTY. DOCKET NO./TITLE
10/487,810	09/10/2004	Melanie Holmes	3274.1003-000

CONFIRMATION NO. 3616

OC000000020974413

OC000000020974413

021005
HAMILTON, BROOK, SMITH & REYNOLDS, P.C.
530 VIRGINIA ROAD
P.O. BOX 9133
CONCORD, MA 01742-9133

Date Mailed: 10/25/2006

NOTICE OF ACCEPTANCE OF POWER OF ATTORNEY

This is in response to the Power of Attorney filed 10/12/2006.

The Power of Attorney in this application is accepted. Correspondence in this application will be mailed to the above address as provided by 37 CFR 1.33.

Timothy Caldwell

TIMOTHY CALDWELL
PATDACAP (571) 272-4200

OFFICE COPY

UNITED STATES PATENT AND TRADEMARK OFFICE

UNITED STATES DEPARTMENT OF COMMERCE
United States Patent and Trademark Office
Address: COMMISSIONER FOR PATENTS
P.O. Box 1450
Alexandria, Virginia 22313-1450
www.uspto.gov

APPLICATION NO.	ISSUE DATE	PATENT NO.	ATTORNEY DOCKET NO.	CONFIRMATION NO.
10/487,810	12/05/2006	7145710	3274.1003-000	3616

21005 7590 11/15/2006

HAMILTON, BROOK, SMITH & REYNOLDS, P.C.
530 VIRGINIA ROAD
P.O. BOX 9133
CONCORD, MA 01742-9133

ISSUE NOTIFICATION

The projected patent number and issue date are specified above.

Determination of Patent Term Adjustment under 35 U.S.C. 154 (b)
(application filed on or after May 29, 2000)

The Patent Term Adjustment is 122 day(s). Any patent to issue from the above-identified application will include an indication of the adjustment on the front page.

If a Continued Prosecution Application (CPA) was filed in the above-identified application, the filing date that determines Patent Term Adjustment is the filing date of the most recent CPA.

Applicant will be able to obtain more detailed information by accessing the Patent Application Information Retrieval (PAIR) WEB site (http://pair.uspto.gov).

Any questions regarding the Patent Term Extension or Adjustment determination should be directed to the Office of Patent Legal Administration at (571) 272-7702. Questions relating to issue and publication fee payments should be directed to the Customer Service Center of the Office of Patent Publication at (703) 305-8283.

APPLICANT(s) (up to 18 names are included below, see PAIR WEB site http://pair.uspto.gov for additional applicants):

Melanie Holmes, Ipswich, UNITED KINGDOM;

UNITED STATES PATENT AND TRADEMARK OFFICE

UNITED STATES DEPARTMENT OF COMMERCE
United States Patent and Trademark Office
Address: COMMISSIONER FOR PATENTS
P.O. Box 1450
Alexandria, Virginia 22313-1450
www.uspto.gov

APPLICATION NO.	ISSUE DATE	PATENT NO.	ATTORNEY DOCKET NO.	CONFIRMATION NO.
10/487,810	12/05/2006	7145710	3274.1003-000	3616

21005 7590 11/15/2006

HAMILTON, BROOK, SMITH & REYNOLDS, P.C.
530 VIRGINIA ROAD
P.O. BOX 9133
CONCORD, MA 01742-9133

ISSUE NOTIFICATION

The projected patent number and issue date are specified above.

Determination of Patent Term Adjustment under 35 U.S.C. 154 (b)
(application filed on or after May 29, 2000)

The Patent Term Adjustment is 122 day(s). Any patent to issue from the above-identified application will include an indication of the adjustment on the front page.

If a Continued Prosecution Application (CPA) was filed in the above-identified application, the filing date that determines Patent Term Adjustment is the filing date of the most recent CPA.

Applicant will be able to obtain more detailed information by accessing the Patent Application Information Retrieval (PAIR) WEB site (http://pair.uspto.gov).

Any questions regarding the Patent Term Extension or Adjustment determination should be directed to the Office of Patent Legal Administration at (571) 272-7702. Questions relating to issue and publication fee payments should be directed to the Customer Service Center of the Office of Patent Publication at (703) 305-8283.

APPLICANT(s) (up to 18 names are included below, see PAIR WEB site http://pair.uspto.gov for additional applicants):

Melanie Holmes, Ipswich, UNITED KINGDOM;