ORACLE EXHIBIT 1024

PART 4

Exhibit No.	Description	Offered	Objected	Admitted
D-18	Article entitled, "Storage Area Networking-The Network Behind the Server" (Tang) (Hulsey Ex 8 (CRDS 16302-307))			
D-19	CrossPoint 4100 Fibre Channel to SCSI Router Preliminary Datasheet (Hulsey Ex 9 (CRDS 16129-130))			
D-20	Verrazano FC-SCSI Bridge –Product Overview (Hoese Ex 2; Quisenberry Ex 30; Bardach Ex 5 (CRDS 40807-823))			
D-21	Verrazano Software Development (Hoese Ex 3; Quisenberry 34; Smith Ex 12; Bardach Ex 6 (CRDS 40925-958))			
D-22	Email Dated 12/18/96 from B. Smith to B. Bardach re: More on the MUX, Priorities and Other (Hoese Ex 8; Smith Ex 5; Bardach Ex 20 (CRDS 4983-84))			
D-23	Compaq and Crossroads FC to SCSI Bridge Discussion (Hoese Ex 11 (CRDS 42459-475))			
D-24	Infinity Commstor Fibre Channel Demo for Fall Comdex, 1996 (Hoese Ex 15; Bardach Ex 13 (CRDS 27415))			
D-25	Email Dated 12/20/96 from J. Boykin to B. Smith re: Purchase Order for Betas in February and March (Hoese Ex 16; Quisenberry Ex 24; Bardach Ex 12 (CRDS 13644-650))			
D-26	McData Fibre Channel Infrastructure Meeting in San Francisco (Hoese Ex 20; Bardach Ex 15 (CRDS 9258-71))			
D-27	McData Corporation's Fibre Channel Network Switching Presentation dated June 28, 1995 (CRDS 9229-34)			
D-28	Verrazano Manufacturing Plan (Russell Ex 8; Quisenberry Ex 35; Bardach Ex 7 (CRDS 39702-710))			
D-29	Letter Dated 4/8/95 from J. Dedek to R. Lenz re: FC-SCSI Bridge (Dedek Ex 3 (ANCT 853-57))			
D-30	The FSB 8000 Bridge: Application Note J. Dedek (Dedek Ex 4 (ANCT 346-47))			

Oracle-Huawei-NetApp Ex. 1024, pg. 1946

Exhibit No.	Description	Offered	Objected	Admitted
D-31	Memo Dated 11/10/95 from N. Wannamaker to J. Dedek re: Bridge Usage (Dedek Ex 5 (ANCT 573))			
D-32	Block Diagram of Low Cost FC/SCSI Bridge #FSB-8001 (Dedek Ex 6 (ANCT 565-66))			
D-33	Model FSB 8001/8010 Fibre Channel to SCSI Bridge (Dedek Ex 7 (ANCT 353-54))			
D-34	Memo Dated 2/9/96 from T. Nguyen to C. Lynch re: SCSI to FC Bridge (FCB-8000) (Dedek Ex 8 (ANCT 1685-86))			
D-35	Memo Dated 2/10/96 from J. Anthony to J. Dedek re: FSB-8000/East Coast Trip Early March (Dedek Ex 9 (ANCT 401-06))			
D-36	FSB-8001 266M Bridge and BOM Report (Dedek Ex 10 (ANCT 576-80))			
D-37	Physical Exhibit of Ancot Product FSB-8001 Bridge, Version 3 (Dedek Ex 11)			
D-38	Physical Exhibit of Ancot Product FSB-800 Bridge, Version 3 (Dedek Ex 12)			
D-39	Ancot Document Bearing Method A and Method B with Chart Showing Proposed Implementation (Dedek Ex 13 (ANCT 1145-46))			
D-40	Memo Dated 4/6/96 from N. Wanamaker to J. Koenig, J. Dedek, M. Hale re: FSB800X Status (Dedek Ex 14 (ANCT 545-47))			
D-41	Fax Dated 3/29/96 from J. Dedek to R. Yomtonbiau re: FC/SCSI Bridges w/Attached Tables (Dedek Ex 15 (ANCT 600-08))			
D-42	Fax Dated 5/3/96 from J. Dedek to J. Anthony re: Encore FC Bridge Order (Dedek Ex 16 (ANCT 1101-03))			
D-43	FSB-8001/8010 Datasheet (Dedek Ex 17 (ANCT 348-50))			
D-44	Memo Dated 6/28/96 from Jim to Jan, Chris and Dean re: DEC-FC Bridge Opportunity, 6/27/96 Meeting (Dedek Ex 18 (ANCT 1212-13))			

Oracle-Huawei-NetApp Ex. 1024, pg. 1947

Exhibit No.	Description	Offered	Objected	Admitted
D-45	Memo Dated 8/7/96 from Jim to Jan, Tom, Chris, Dean and FC Bridge Engineering re: DEC-FC Bridge, 8/7 Meeting (Dedek Ex 19 (ANCT 1302-06))			
D-46	Memo Dated 8/19/96 from Jim to Jan, Tom, Chris, Dean, FC Bridge Engineering, Weil, Jozef and Gary re: DEC-FC Bridge, 8/16 Review Meeting (Dedek Ex 20 (ANCT 3546-51))			
D-47	Report from Elliot Laboratories (Dedek Ex 21 (ANCT 1581-95))			
D-48	Memo Dated 10/30/96 from Jim to Jan re: Neil-Important that he remain at DEC Next Week (Dedek Ex 22 (ANCT 1230))			
D-49	Memo Dated 10/30/96 from Jim to Jan, Dean and Tom re: DEC, Order Status for 34 Bridges (Dedek Ex 23 (ANCT 1231))			
D-50	Printout of Disk, FSB-8000 Manual (Dedek Ex 24 (ANCT 4118))			
D-51	Printout of Disk, FSB-8000 Specs (Oct-Dec) (Dedek Ex 25 (ANCT 4119))			
D-52	FSB-8001 Schematics (Dedek Ex 26 (ANCT 4037-63))			
D-53	Programming Language for the Field Programmable Gate Arrays Used in the 8100 Bridge (Dedek Ex 27 (ANCT 2072-89; 2105-11; 3515-22))			
D-54	Folder entitled, "FCS 266" (Dedek Ex 28 (ANCT 2181-98))			
D-55	Folder entitled, "Low Cost FCS 266" with Attached Email of 4/26/96 from N. Wanamaker to S. Holt re: 53C770 Issues (Dedek Ex 29 (ANCT 2478; 2524-31; 2537-38))			
D-56	Folder entitled, "FSB 8010/CPU-SE" (Dedek Ex 30 (ANCT 2626; 2664-73))			
D-57	Folder entitled, "XMIT Chip" (Dedek Ex 31 (ANCT 2887-2948))			

Oracle-Huawei-NetApp Ex. 1024, pg. 1948

Exhibit No.	Description	Offered	Objected	Admitted
D-58	Folder entitled, "RCV Chip" (Dedek Ex 32 (ANCT 2972; 2975-3016; 3217-22))			
D-59	Folder entitled, "FSB 8001 XMIT FPGA" (Dedek Ex 33 (ANCT 3932-72))			
D-60	Folder entitled, "FSB 8001 RCVR FPGA" (Dedek Ex 34 (ANCT 3973-4024))			
D-61	Draft Specification Ancot FSB-8001 Bridge (Dedek Ex 35 (ANCT 771-809))			
D-62	Engineering Plan FC/SCSI Bridge FSB-8001 (Dedek Ex 36 (ANCT 810-32))			
D-63	FSB 8001 Memory Map and Register Descriptions (Dedek Ex 37 (ANCT 4064-70))			
D-64	FSB 8001 Hardware Architecture and Theory of Operation (Dedek Ex 38 (ANCT 4025-36))			
D-65	FSB 8001P Hardware Architecture and Theory of Operation (Dedek Ex 39 (ANCT 3583-94))			
D-66	Letter Dated 4/11/97 from J. Dedek to B. Smith (Dedek Ex 40 (ANCT 35-36))			
D-67	Datasheet for CrossPoint 4100 Fibre Channel to SCSI Router (Dedek Ex 41 (ANCT 117-120))			
D-68	Letter Dated 5/16/97 from C. Schwenker to J. Dedek re: N. Wanamaker's Employment with Crossroads and Ancot's Trade Secret Concerns (Response to J. Dedek's Letter to B. Smith of 4/11/97) (Dedek Ex 42 (ANCT 32-34))			
D-69	Physical Exhibit of Ancot Product FSB-8001 Bridge (Dedek Ex 43)			
D-70	Drawing by Jan Dedek (Dedek Ex 44)			
D-71	Article Entitled, "Empirical Evidence on the Validity of Litigated Patents" by J. Allison and M. Lemley AIPLA Quarterly Journal, Vol. 26, No. 3, pp. 185-211, June 1998 (DeWilde 83; Levy 1)			
D-72	Draft Proposed American National Standard Information Systems-dpANS Fibre Channel Protocol for SCSI, Revision 012 (Wanamaker Ex 4 (CRDS 166230-304))			

Oracle-Huawei-NetApp Ex. 1024, pg. 1949

Exhibit No.	Description	Offered	Objected	Admitted
D-73	Symbios Logic - Software Interface Specification Series 3 SCSI RAID Controller Software Release 02.xx (Engelbrecht Ex 2 (LSI 1421-1658))			
D-74	Symbios Logic – Hardware Functional Specification for the Symbios Logic Series 3 Fibre Channel Disk Array Controller Model 3701 (Engelbrecht Ex 3 (LSI 1659-1733))			
D-75	Symbios Logic – Software Release Specification SYMplicity Storage Manager for Windows NT Release 06.01.21.08 (Engelbrecht Ex 4 (LSI 1734-80))			
D-76	Symbios Logic – Hardware Functional Specification for the Symbios Logic Fibre Channel Interface Board II 81E Card (Engelbrecht Ex 5 (LSI 1781-1800))			
D-77	RAID Manager Design Note (Engelbrecht Ex 6 (LSI 1801-07))			
D-78	Symbios Logic – Fibre Channel Software Design Document, Tachyon Specific, by Charles Binford, Ahmad Tawil and Robin Huber (Engelbrecht Ex 7 (LSI 1808-25))			
D-79	Accounts Payable Invoices to Transoft Corporation from LSI (Engelbrecht 10 (LSI 2779-82))			
D-80	Purchase Order and Shipping List to Transoft Corporation (Engelbrecht 11 (LSI 2822-24))			
D-81	News Release- Symbios Logic to Demonstrate Strong Support for Fibre Channel at Fall Comdex (Engelbrecht 12 (LSI 2785-86))			
D-82	OEM Datasheet on the 3701 Controller (Engelbrecht 13 (LSI 1837-38))			
D-83	Adaptec AEC-7312A Product Announcement for Competitive Product to Fibre Channel to SCSI RAID Controller (Engelbrecht 16 (LSI 1839-47))			

Oracle-Huawei-NetApp Ex. 1024, pg. 1950

Exhibit No.	Description	Offered	Objected	Admitted
D-84	Confidential Disclosure Agreement with Hewlett-Packard Dated 5/28/96 (Smith Ex 2 (CRDS 2323))			
D-85	Confidential Disclosure Agreement with Hewlett-Packard Dated 9/24/96 (Smith Ex 3 (CRDS 2313))			
D-86	Letter Dated 5/12/97 from A. Leal to B. Bardach re: Enclosing a Copy of the Executed Original OEM License and Purchase Agreement Between Hewlett-Packard and Crossroads (Smith Ex 4 (CRDS 52581-641))			
D-87	Purchasing and Licensing Agreement Between Hewlett-Packard and Crossroads Dated 9/22/98 (Smith Ex 7 (CRDS 29603-646))			
D-88	Preliminary Product Literature for Infinity Commstor's Fibre Channel to SCSI Protocol Bridge (Smith Ex 11; Quisenberry Ex 31 (SPLO 428-30))			
D-89	Fax Dated 12/19/96 from B. Bardach to T. Rarich re: Purchase Order Information (Smith Ex 16 (CRDS 4460))			
D-90	Power of Attorney Documents Files with PTO for Patent Application 001,799 (Smith Ex 18)			
D-91	SWOT Analysis (Smith Ex 21 (CRDS 39777-782))			
D-92	Letter Dated from J. Boykin to B. Smith re; Purchase Order for Evaluation Units from Crossroads (Smith Ex 24 (CRDS 8556-57))			
D-93	Fax Dated 7/22/96 from L. Petti to B. Smith re: Purchase Order from Data General for FC2S Fibre to Channel SCSI Protocol Bridge Model 11 (Smith Ex 25; Quisenberry Ex 23; Bardach Ex 11 (CRDS 8552-55; 8558))			
D-94	Notes for 9/96 Meeting with Compaq Computer (Smith Ex 27; Bardach 2 (CRDS 13562-563))			
D-95	Handwritten Notes of Brian Smith, February 17, 1997 (CRDS 7347-48)			
D-96	Memo Dated 9/27/96 from B. Bardach to B. Smith re: Compaq 9/17 Meeting Summary (Bardach Ex 4 (CRDS 13559-560))			

Oracle-Huawei-NetApp Ex. 1024, pg. 1951

Exhibit No.	Description	Offered	Objected	Admitted
D-97	Letter Dated 11/27/96 from B. Bardach to B. Weisickle re: Comdex Technology Suite (Bardach Ex 8 (CRDS 4969))			
D-98	CrossPoint 4400 Fibre Channel to SCSI Router Preliminary Datasheet (Bardach Ex 9; Quisenberry Ex 33 (CRDS 25606-607))			
D-99	Email Dated 10/11/96 from G. Hoese to B. Bardach re: FC-SCSI Bridge Meeting (Bardach Ex 10 (CRDS 13631))			
D-100	Fax Dated 12/19/96 from B. Bardach to T. Rarich re: Purchase Order Information (Bardach Ex 14 (CRDS 4460))			
D-101	Letter Dated 1/13/97 from B. Bardach to J. Otis re: Evaluation Units (Bardach Ex 16 (CRDS 8141))			
D-102	Email Dated 2/27/97 from B. Bardach to S. Miyamoto re: Kubota Purchase Order (Bardach Ex 17 (CRDS 5227-31))			
D-103	Confidential Disclosure Agreement Between Hewlett-Packard Network Server and Crossroads (Bardach Ex 18 (CRDS 2315))			
D-104	Confidential Disclosure Agreement Between Hewlett-Packard Optical Communications Division and Crossroads (Bardach Ex 19 (CRDS 2340))			
D-105	Email Dated 2/27/97 from B. Bardach to Steve at Exabyte re: Exabyte Software Compatibility Matrix (Bardach Ex 21 (CRDS 4557-58))			
D-106	Letter Dated 10/16/96 from B. Bardach to J. Kramer re: Developing a Business Relationship with Unisys to Sell its FC-SCSI Bridge Products (Bardach Ex 22 (CRDS 5704))			
D-107	Email Dated 12/30/96 from B. Smith to B. Bardach re Teleconference Today re: Download Utility for NT, Delivery of Muxes (Bardach Ex 23 (CRDS 4970))			
D-108	Email Dated 2/17/97 from B. Bardach to M. Wilding re: Information on CrossPoint 4100 (Bardach Ex 24 (CRDS 13643))			

Oracle-Huawei-NetApp Ex. 1024, pg. 1952

Exhibit No.	Description	Offered	Objected	Admitted
D-109	Letter Dated 2/3/97 from B. Bardach to W. Downer re: Sequent Computer Systems re: Licensing Sequent's 1 to 8 FS-SCSI Technology (Bardach Ex 25 (CRDS 5422-23))			
D-110	Signed Exclusivity Agreement Between Compaq and Crossroads Dated 8/17/98 (LiVolsi Ex 3 (CRDS 1484-94))			
D-111	LUN Management Software Specification, Revision 1.0 (LiVolsi Ex 5; Quisenberry Ex 52 (CRDS 34081-089))			
D-112	Miscellaneous Documents Regarding Comdex (Quisenberry Ex 2 (CRDS 27415-465))			
D-113	CrossPoint 4100 Fibre Channel to SCSI Router Preliminary Datasheet (Quisenberry Ex 3 (CRDS 4933-34))			
D-114	CrossPoint 4400 Fibre to Channel to SCSI Router Preliminary Datasheet; Crossroads Company and Product Overview (Quisenberry Ex 4 (CRDS 25606; 16136))			
D-115	Hewlett-Packard Roseville Site Property Pass (Quisenberry Ex 7 (CRDS 27413-414))			
D-115a	B. Smith email to B. Bardach re: Teleconference Today re: Download Utility for NT, Delivery of Muxes etc. (Quisenberry Ex 8 (CRDS 4970))			
D-116	Ancot Power Point Presentation (Quisenberry Ex 17 CRDS 51783-786))			
D-117	IOS Power Point Presentation (Quisenberry Ex 18 (CRDS 51845; 51960))			
D-118	Ancor Power Point Presentation (Quisenberry Ex 19 (CRDS 51777-782))			
D-119	Storage Concepts Power Point Slides (Quisenberry Ex 20 (CRDS 51689; 51846-848))			
D-120	Ancot Fibre Channel to SCSI Bridge Preliminary Datasheet (Quisenberry Ex 21 (CRDS 22758-767))			
D-121	Nondisclosure Agreement Between Adaptec and Crossroads Dated 10/17/96 (Quisenberry Ex 25 (CRDS 8196))			

Oracle-Huawei-NetApp Ex. 1024, pg. 1953

Exhibit No.	Description	Offered	Objected	Admitted
D-122	Fibre Channel to SCSI Bridge Applications (Quisenberry Ex 32 (CRDS 5723-26))			
D-123	Verrazano Engineering Verification Plan, Version 1.1 (Quisenberry Ex 39 (CRDS 43991-44054))			
D-124	Organizational Presentation on the External Storage Group (Lavan Ex 1 (CNS 182242-255))			
D-125	Bridge Phase II Architecture Presentation (Lavan Ex 2 (CNS 182287-295))			
D-126	Attendees/Action Items from 4/12/96 Meeting at BTC (Lavan Ex 3 (CNS 182241))			
D-127	Brooklyn Hardware Engineering Requirements Documents, Revision 1.4 (Lavan Ex 4 (CNS 178188-211))			
D-128	Brooklyn Single-Ended SCSI RAID Bridge Controller Hardware OEM Manual, Revision 2.1 (Lavan Ex 5 (CNS 177169-191))			
D-129	Brooklyn SCS-SCSI Intelligent External RAID Bridge Definition Phase Exit Documentation (Lavan Ex 6 (CNS 177397-611))			
D-130	Coronado Hardware Engineering Requirements Document, Revision 0.0 (Lavan Ex 7 (CNS 176917-932))			
D-131	ESS/FPG Organization (Lavan Ex 8 (CNS 178639-652))			
D-132	Adaptec MCS ESS Presents: Intelligent External I/O Raid Controllers "Bridge" Strategy (Lavan Ex 9 (CNS 178606-638))			
D-133	AEC-7313 Fibre Channel Daughter Board (for Brooklyn) Engineering Specification, Revision 1.0 (Lavan Ex 10 (CNS 176830-850))			
D-134	Physical Exhibit - First Coronado Prototype (Lavan Ex 11)			
D-135	Physical Exhibit -Rev. B PCB, 10-96 (Lavan Ex 12)			
D-136	Physical Exhibit - Complete Brooklyn Product with a Single-Ended SCSI Motherboard (Lavan Ex 13)			
D-137	Bill of Material (Lavan Ex 14 (CNS 177211-214))			

Oracle-Huawei-NetApp Ex. 1024, pg. 1954

Exhibit No.	Description	Offered	Objected	Admitted
D-138	AEC-4412B, AEC-7412/B. External RAID Controller Hardware OEM Manual, Revision 2.0 (Lavan Ex 15 (CNS 177082-123))			
D-139	Coronado II, AEC-7312A Fibre Channel Daughter (for Brooklyn) Hardware Specification, Revision 1.2 (Lavan Ex 16 (CNS 177192-210))			
D-140	AEC-4412B, AEC7412/3B External RAID Controller Hardware OEM Manual, Revision 3.0 (Lavan Ex 17 (CNS 177124-165))			
D-141	Memo Dated 8/15/97 to AEC-7312A Evaluation Unit Customers re: B001 Release Notes (Lavan Ex 18 (CNS 182878-879))			
D-142	Brooklyn Main Board (AES-0302) MES Schedule (Lavan Ex 19 (CNS 177759-763))			
D-143	News Release – Adaptec Adds Fibre Channel Option to its External RAID Controller Family (Lavan Ex 20 (CNS 182932-934))			
D-144	AEC-4412B/7412B User's Guide (Lavan Ex 21)			
D-145	Memos T. Lavan to J. Walker re: Weekly Status (Lavan Ex 213)			
D-146	Memo B. Morris to M. Gluck, J. Walker, T. Lavan, B. Allison and M. Hardy re: Product Priority List (Lavan Ex 214)			
D-147	Memo D. Matthews to T. Lavan re: LUN Zoning and Extended Copy Key ERDs (Lavan Ex 215)			
D-148	G6322/G7324 External RAID Board Controller-User's Guide (Lavan Ex 216)			
D-149	Data Book- AIC-7895 PCI Bus Master Single Chip SCSI Host Adapter (Davies Ex 1 (CNS 182944-964))			
D-150	Data Book- AIC-1160 Fibre Channel Host Adapter ASIC (Davies Ex 2 (CNS 181800-825))			
D-151	Viking RAID Software (Davies Ex 3 (CNS 180969-181026))			

Oracle-Huawei-NetApp Ex. 1024, pg. 1955

Exhibit No.	Description	Offered	Objected	Admitted
D-152	Header File with Structure Definitions (Davies Ex 4 (CNS 180009-018))			
D-153	C++ SourceCode for the SCSI Command Handler (Davies Ex 5 (CNS 179136-168))			
D-154	Header File Data Structure (Davies Ex 6 (CNS 179997-180008))			
D-155	SCSI Command Handler (Davies Ex 7 (CNS 179676-719))			
D-156	Coronado: Fibre Channel to SCSI Intelligent RAID Controller (Kalwitz Ex 1 (CNS 182804-805))			
D-157	Bill of Material (Kalwitz Ex 2 (CNS 181632-633))			
D-158	Emails Dated 1/13-3/31/97 from P. Colline to Mo re: Status Reports (Kalwitz Ex 3 (CNS 182501-511))			
D-159	Hardware Schematics for the Fibre Channel Daughtercard for Coronado (Kalwitz Ex 4 (CNS 181639-648))			
D-160	Adaptec Schematics re AAC-340 (Kalwitz Ex 14 (CNS 177215-251))			
D-161	Bridge Product Line Review (Manzanares Ex 3 (CNS 177307-336))			
D-162	AEC Bridge Series Products-Adaptec External Controller RAID Products Pre-Release Draft, v.6 (Manzanares Ex 4 (CNS 174632-653))			
D-163	Storage Router Block Diagram Drawn by K. Arroyo (Arroyo Ex 11)			
D-164	Concept 910 Series Real-Time RAID Storage Solutions, Product Brochure (Bock Ex 2 (S 00001-2))			
D-165	Concept 821-SW Real-Time RAID Storage Solutions, Product Brochure (Bock Ex 3 S 00003-4))			
D-166	FibreRAID 907 Real-Time RAID Solution, Product Brochure (Bock Ex 4 (S 00009-10))			
D-167	Article entitled, "Storage Concepts" by Martin Bock (Bock Ex 5 (S 00014))			

Oracle-Huawei-NetApp Ex. 1024, pg. 1956

Exhibit No.	Description	Offered	Objected	Admitted
D-168	FibreRAID 814 Real-Time RAID Solution, Product Brochure (Bock Ex 6 (S 00019-20))			
D-169	Article entitled, "Storage Concepts VideoStar and FibreRAID" by Martin Bock (Bock Ex 7 (S 00021))			
D-170	Article entitled, "SGI Gets a Dose of Fibre from Storage Concepts" by Martin Bock from Silicon Graphics World, Vol. 7, No. 2 (Bock Ex 8 (S 00024-25))			
D-171	Products Shipped Log (Bock Ex 9 (S 00026-29))			
D-172	Concept C814 FCS Disk Array Subsystem SCSI Command Specification (Bock Ex 10 (S 00272-329))			
D-173	Concept C814 FCS Disk Array Subsystem Product Specification (Bock Ex 11 (S 00330-348))			
D-174	Concept C814 FCS Disk Array Subsystem User Guide (Bock Ex 12 (S 00395-509))			
D-175	Concept 910-SW Disk Array Systems Users Guide (Talati Ex 13 (S 00349-394))			
D-176	Concept 910-SW SCSI Command Specification (Talati Ex 14 (S 00118-209))			
D-177	HSx70 System Specification, Steve Sicola, Revision 4 (Pherson Ex 2 (CPQ 1648-1707))			
D-178	Hand-Drawn Document by Michael Barrett at Deposition (Pherson Ex 3)			
D-179	Packet of Documents Containing Diagrams, Schematics, Emails and Product Information (Pherson Ex 4 (CPQ 1292-1806))			
D-180	Email Dated 1/17/97 from G. Dolkas to J. Dunning re: Minutes of 1/13 Phone Conference (Dunning Ex 1 (HP 156-57))			
D-181	Email Dated 1/27/97 from G. Dolkas to J. Dunning re: Minutes of 1/20 Phone Conference Dunning Ex 2 (HP 159-60))			
D-182	Email Dated 2/1/97 from G. Dolkas to J. Dunning re: Minutes of 1/27 Phone Conference (Dunning Ex 3 (HP 161-62))			

Oracle-Huawei-NetApp Ex. 1024, pg. 1957

Exhibit No.	Description	Offered	Objected	Admitted
D-183	Email Dated 3/11/97 from G. Dolkas to J. Dunning re: Minutes of 3/10 Phone Conference (Dunning Ex 4 (HP 177-78))			
D-184	Email Dated 4/7/97 from G. Dolkas to J. Dunning re: Minutes of 3/31/ Phone Conference (Dunning Ex 5 (HP 203-04))			
D-185	Email Dated 4/19/97 from G. Dolkas to J. Dunning re: Minutes of 4/14 Conference (Dunning Ex 6 (HP 215-16))			
D-186	Email Dated 5/5/97 from G. Dolkas to J. Dunning re: Minutes from 4/28 Phone Conference (Dunning Ex 7 (HP 217-18))			
D-187	Email Dated 5/12/97 from G. Dolkas to J. Dunning re: Minutes of 5/5 Phone Conference (Dunning Ex 8 (HP 220-21))			
D-188	Email Dated 5/19/97 from G. Dolkas to J. Dunning re: Minutes from 5/12 Phone Conference (Dunning Ex 9 (HP 223-24))			
D-189	Email Dated 7/28/97 from J. Dunning to G. Dolkas re: A thought About Additional Cost Savings (Dunning Ex 10 (HP 236-38))			
D-190	Email Dated 6/17/97 from J. Dunning to G. Dolkas re: Send us the Code (Dunning Ex 11 (HP 272))			
D-191	Hewlett-Packard Service and User Guide Manual for HP A330A, A3511A, A3511Z Fibre Channel SCSI Multiplexor (Preliminary) (Dunning Ex 12 (CPQ 1000-1144))			
D-192	Hewlett-Packard Service and User Manual for Fibre Channel SCSI Multiplexor (Dunning Ex 13 (HP 335-486))			
D-193	Hewlett-Packard Roseville Site Property Pass for Brian Smith (Dunning Ex 14 (HP 489))			
D-194	Distribution Agreement Between Hewlett-Packard and Crossroads (Dunning Ex 15 (HP 326-33))			
D-195	Hewlett-Packard Preliminary Technical Data Sheet for the HP A3308A, A3511A, A3511AZ Fibre Channel-SCSI Multiplexor (Dunning Ex 16 (HP 492-93))			

Oracle-Huawei-NetApp Ex. 1024, pg. 1958

Exhibit No.	Description	Offered	Objected	Admitted
D-196	Hewlett-Packard Preliminary Technical Data Sheet for the HP A330A, A3511A, A3511AZ Fibre Channel-SCSI Multiplexor (Dunning Ex 17 (HP 490))			
D-197	Background on Fibre Channel SCSI (Dunning Ex 18 (HP 1, 3, 5, 7, 9, 11))			
D-197a	Background on Fibre Channel SCSI (HP 1-12)			
D-198	OEM Price List (August 1999) (Regan Ex 7 (PTI 48416))			
D-199	HPFC-5000 Tachyon User's Manual, First Edition (PTI 172419-839)			
D-200	Fall Comdex: A Storage Overview, 1996 (ANCT 470; ANCT 472)			
D-201	RAID Manager 5 with RDAC 5 for UNIX V.4 - User's Guide (MetaStore) (LSI 1853-2294)			
D-202	Demonstrative: Block Diagram SYMBIOS LOGIC Series 3 Fibre Channel Disk Array Controller, Model 3701 Hardware Functional Specification (LSI 1670)			
D-203	Claim Chart: Detailed Analysis of Invalidity of Claims in View of the 3701 Product			
D-204	Claim Chart: Detailed Analysis of Invalidity of Claims in View of the HSx72 Product			
D-205	Claim Chart: Detailed Analysis of Invalidity of Claims in View of the Coronado Product			
D-206	CV of Gary Stephens			
D-207	CV of Brian Berg (Ex 1 to Berg Report)			
D-208	Expert Witness Experience of Brian Berg (Ex 2 to Berg Report)			
D-209	Public Speaking and Conference Participation of Brian Berg (Ex 3 to Berg Report)			
D-210	Publications of Brian Berg (Ex 4 to Berg Report)			
D-211	U.S. Patent No. 6,041,381 (Hoese) (Ex 7 to Berg Report)			
D-212	CV of Kenneth Flamm (Ex 1 to Flamm Report)			

Oracle-Huawei-NetApp Ex. 1024, pg. 1959

Exhibit No.	Description	Offered	Objected	Admitted
D-213	Pathlight SAN Router and Gateway Sales Analysis (Ex 3 to Flamm Report)			
D-214	VPS Software Activations Analysis (Ex 4 to Flamm Report)			
D-215	VPS Pricing History (Ex 5 to Flamm Report)			
D-216	Conservative Estimate of Pathlight Revenue from VPS Activation (Ex 6 to Flamm Report)			
D-217	Estimated Cost to Pathlight of Rewriting VPS (Ex 7 to Flamm Report)			
D-218	Lost Profits to Pathlight if it Removed Access Control from VPS and Received no Revenues from VPS Sales (Ex 8 to Flamm Report)			
D-219	Procom Technology R2000 Failover RAID User's Guide, December 1996 (PTI 177762-786)			
D-220	"Mylex Offers OEMs and VARs High Performance SCSI-to-SCSI RAID Controller with Active/Active Failover", March 17, 1997 (PTI 177903-905)			
D-221	DAC960SX/DAC960SF SCSI Command Reference Manual, Firmware Version 3.3, 11/21/97 (PTI 177906-178089)			
D-222	"A Shared Disk File System for a Cluster of IRIX Workstations", Matthew T. O'Keefe, University of Minnesota (PTI 178424-460)			
D-223	Mylex Raidfx Manager Version 7.09 User Guide, 1998 (PTI 178714-777)			
D-224	Disk Storage in a Dual Server Cluster, William V. Courtright II, Symbios Logic, August 28, 1996 (PTI 178277-294)			
D-225	"Pathlight SAN Gateway-Value Add Functions" (PTI 178814-815)			
D-226	"Accommodating Huge Data Farms", Robin Purohit, Veritas Software, May 22, 2000 (PTI 173621)			
D-227	LUN Security for SANs White Paper, Hu Yoshida, Hitachi, 1999 (PTI 173718-721)			
D-228	Veritas SANPoint Control (PTI 173722-732)			

Oracle-Huawei-NetApp Ex. 1024, pg. 1960

Exhibit No.	Description	Offered	Objected	Admitted
D-229	Applications in Storage Area Networking, Veritas (PTI 173755-761)			
D-230	LUN Security Considerations for Storage Area Networks, Yoshida, Hitachi, 1999 (Flamm Depo Ex 3 (PTI 173762-766))			
D-231	Procom Technology R2000 Failover RAID User's Guide, Revision 2.0, December 1996 (PTI 174510-525)			
D-232	Veritas Software Extends Online Disk Management for Microsoft Windows Enterprise Environments, May 23, 2000 (PTI 174626-627)			
D-233	SAN Management - A Guide to Managing Multi-vendor Storage Area Networks, Veritas, 2001 (PTI 174730-735)			
D-234	Sharing SCSI Tape Backup Devices in a Fibre Channel SAN Environment, TD Systems Corporation (PTI 275377-383)			
D-235	IBM 7190 SCSI Host to SSA Loop Attachment Model 100 Installation and User's Guide, August 1997 (PTI 175810-870)			
D-236	Mylex Dual Controller Configurations using the Mylex DAC960SX and DAC960SXI Disk Array Controllers, May 4, 1997 (PTI 175942-955)			
D-237	"Dataquest names Mylex World's Number One Non-captive RAID Controller Vendor in new 1998 report", October 13, 1998 (PTI 176082-083)			
D-238	Internet Technology Strategy: Summing Up Storage: Our Quick Guide to an IT megatrend, Salomon Smith Barney, January 24, 2001 (PTI 181037-062)			
D-239	Veritas, High Availability Clustering in a Microsoft Windows Environment (PTI 181509-528)			
D-240	Letter dated May 12, 1998 from Pathlight to IBM re Inquiry # RMSS 0506-01, Fibre Channel to SCSI Bridge, with attachments (PTI 48922-49266)			
D-241	Letter dated July 9, 1998 from Pathlight to IBM re Inquiry # 98RMSS 0710-1, Fibre Channel to SCSI Gateway, with attachments (PTI 50005-087)			

Oracle-Huawei-NetApp Ex. 1024, pg. 1961

Exhibit No.	Description	Offered	Objected	Admitted
D-242	IBM Production Procurement Agreement between IBM and Pathlight Technology, Inc., signed January 14, 1999 (PTI 50088-154)			
D-243	Letter dated April 21, 1998 from IBM to Pathlight re Request for Proposal, Inquiry # RMSS 0506-01, Fibre Channel to SCSI Bridge, with attachments (PTI 82749-769)			
D-244	Emails dated March 15-16, 1999 between Randy Hood and Richard Lamperd, re Results of "road map" discussion (PTI 48213-214)			
D-245	Handwritten notes dated May 17, 1999 (PTI 48202-204)			
D-246	Memorandum dated June 3, 1999 from James H. Watson, Jr. to Randy Hood and Said Rahmani re IBM SAN Router Negotiations Update (PTI 47847-849)			
D-247	Fax transmission dated June 7, 1999 from J.H. Watson, Jr. to Dick Lamperd attaching Pathlight's response to request for information (PTI 48184-186)			
D-248	Pathlight OEM Price List, August 1999 (PTI 48416)			
D-249	Fax transmission dated September 29, 1999 from James H. Watson, Jr. to Randy Hood re information transmittal, with attachments (PTI 47939-950)			
D-250	Email dated September 29, 1999 from James H. Watson, Jr. to Karen Ward and Brandon Wong re Tachyon Enhancement plus... implementation proposal (PTI 47912-913)			
D-251	Handwritten notes dated September 30, 1999 (PTI 47930)			
D-252	Letters dated October 5, 1999 from Randolph Hood to Richard Lamperd re pricing announcement for 2000, 1DualFC(SW)-4DS with VPS quotation, VPS software quotation, Existing SAN Gateway upgrade quotation (PTI 47922-925)			

Oracle-Huawei-NetApp Ex. 1024, pg. 1962

Exhibit No.	Description	Offered	Objected	Admitted
D-253	Email dated October 21, 1999 from Sandie Butler to James H. Watson et al re info request in prep for IBM R&D units to come back for upgrade (PTI 47914-916)			
D-254	Handwritten notes dated October 25, 1999 (PTI 47919)			
D-255	Handwritten notes dated October 8, 1999 (PTI 47926-927)			
D-256	Pathlight OEM Price List dated November 1999 (PTI 48415)			
D-257	Email dated November 10, 1999 from James H. Watson, Jr. to Dick Lamperd re Agenda for our Next Conference Call (PTI 47875-877)			
D-258	Fax transmission dated November 24, 1999 from Randolph Hood to Hank Watson with attached fax message and letter from Randolph Hood to Richard Lamperd re 1DualFC(SW)-4DS with VPS quotation (PTI 47865-867)			
D-259	Invoice number 114087 dated January 14, 2000 from Pathlight to Unisys with attached fax transmission dated June 26, 2000 (PTI 48317-318)			
D-260	Letters dated February 15-16, 2000 from Randolph Hood to Richard Lamperd re shipping schedule and FRU unit upgrade to VPS quotation, data mover quotation, with attached memo dated February 15, 2000 and emails dated August 5, 1999 (PTI 48256-261)			
D-261	Letters dated April 26, 2000 from Randolph Hood to Jan White re Extended distance fibre channel long wave PMC module with 2200A, SCSI LVD module, SAN Gateway & SAN Router SCSI pricing review, VPS client software license (PTI 48243-247)			
D-262	Pathlight OEM Price Lists dated May 2000 (PTI 48411-412)			

Oracle-Huawei-NetApp Ex. 1024, pg. 1963

Exhibit No.	Description	Offered	Objected	Admitted
D-263	Letters dated May 4, 2000 from Randolph Hood to Jan White re Extended distance fibre channel long wave PMC module with 2200A, SAN Gateway & SAN Router SCSI pricing review, SCSI LVD module, VPS client software license (PTI 48239-242)			
D-264	Amendment 3 to the Production procurement agreement no. 4998SJ0008 executed on January 14, 1999 between IBM and Pathlight Technology, Inc. (PTI 48115-116)			
D-265	Letter dated May 25, 2000 to James Watson re Amendment #3 to Attachment 1 to Production Procurement Agreement No. 4998SJ0008 between IBM and Pathlight (PTI 48071-072)			
D-266	Email dated May 31, 2000 from Nathan Dickerman to Hank Watson re Amendment #3 with attached draft (PTI 48095-098)			
D-267	Various Pathlight invoices to Overland Data and IBM (PTI 170600, 170559, 170585, 170572, 170534, 170545, 170277, 170424)			
D-268	TD Systems Omniserve 3 - Fast and Wide SCSI Server: User Guide for All Sharing Models, Rev. 3 (TDS 127-70)			
D-269	Pathlight Monthly Income Statement – FY 2000 – 1st and 2nd Quarters (PTI 169540-542)			
D-270	Pathlight Calendar Year 1999 – Operating Expense Trend Lines Last 10 Months (PTI 57288-290)			
D-271	American National Standard – Small Computer Systems Interface (SCSI); Rev. 17-B dated March 3, 1986 (PTI 166556-563)			
D-272	Storage Networking: Storage vs. Data Sharing-Creating Appropriate SAN Solutions -Hewlett-Packard (Flamm Ex 2; PTI 181250-256)			
D-273	LUN-Level Zoning – White Paper (Flamm Ex 4; PTI 177394-398)			
D-274	McData – A Discussion on Fibre Channel Infrastructure Issues (CRDS 5100-22)			

Oracle-Huawei-NetApp Ex. 1024, pg. 1964

Exhibit No.	Description	Offered	Objected	Admitted
D-275	Mark Levy Letter to Said Rahmani Khezri dated April 10, 2000 with attachments – "The Levy Opinion" (Rahmani Ex 81 (PTI 165433-614))			
D-276	Pathlight's SAN Router Installation and User's Guide - September, 2000 (Prestas Ex 85; Rahmani Ex 89 (PTI 165032-243))			
D-277	Pathlight's Gateway Installation and User's Guide – August, 2000 (Rahmani Ex 88 (PTI 167074-293))			
D-278	Hewlett Packard's TachLite Fibre Channel Mass Storage Interface Controller - User's Manual, Draft Ver. 2.5 (CRDS 6829-7061)			
D-279	SCSI Command Support for SSA/SCSI Bridge – Terrence Kelleher (PTI 11191-307)			
D-280	SPARCstorage Array User's Guide, Rev A (PTI 161230-161945)			
D-281	X3T10 994D - (Draft) Information Technology: SCSI-3 Architecture Model, Rev. 18 (PTI 165977-166049)			
D-282	X3T10 Project 1047D: Information Technology - SCSI-3 Controller Commands (SCC), Rev. 6c (PTI 166400-546)			
D-283	X3T10 995D - (Draft) SCSI-3 Primary Commands, Rev. 11 (Wanamaker Ex 5 (PTI 166050-229))			
D-284	X3T10 Project 996D: Information Technology - SCSI-3 Block Commands (SBC), Rev. 8 (PTI 171411-549)			
D-285	Fibre Channel - Physical and Signaling Interface (FC-PH): X3T11/Project 755D, Rev. 4.3 (PTI 168209-685)			
D-286	Fibre Channel - Physical and Signaling Interface (FC-PH): X3T11/Project 901D, Rev. 7.4 (PTI 167975-168162)			
D-287	X3.269-199X (Draft) - Information Systems - dpANS Fibre Channel Protocol for SCSI, Rev. 012 (PTI 166230-304)			
D-288	X3T11/Project 1162DT: Fibre Channel Private Loop SCSI Direct Attach (FC-PLDA), Rev. 1.8 (Wanamaker Ex 6 (PTI 166305-399))			

Oracle-Huawei-NetApp Ex. 1024, pg. 1965

Exhibit No.	Description	Offered	Objected	Admitted
D-289	Small Computer System Interface (SCSI), X3T9.2 /82-2, Revision 17B, 16 December 1985 (PTI 171715-904)			
D-290	Small Computer System Interface-2 (SCSI-2), X3T9.2 Project 375D, Revision 10L, 7 September 1993 (PTI 171905-172405)			
D-291	SCSI-3 Primary Commands, T10 Project 995D, Revision 11A, 28 March 1997 (PTI 167405-430)			
D-292	*InfoStor*, "Building Better Backup Systems with SANs", Farley, Marc, November 2000, pp. 56-72, (PTI 172406-418)			
D-293	The RAIDbook - A Source Book for Disk Array Technology, 4th Edition (PTI 167299-404)			
D-294	Project T10: SCSI-3 Standards Architecture Roadmap and FC-PH, Rev 4.3: Figure 1 - Document Relationship re SCSI-3 Fibre Channel Protocol (PTI 162110-111)			
D-295	Press Release re Storage Concepts Debuts FibreRAID (PTI 167537-538)			
D-296	Report of the Working Group on Storage I/O for Large Scale Computing; Department of Computer Science Duke University: CS-1996-21 (PTI 173330-347)			
D-297	VBAR Volume Backup and Restore (CRDS 12200-202)			
D-298	Report of the Working Group on Storage I/O for Large Scale Computing, ACM Computing Surveys, Vol. 28, No. 4, pp. 1-15 (CRDS 39993-40007)			
D-299	A Case for Network-Attached Secure Disks, Carnegie Mellon University (CMU-CS-96-142) (CRDS 39974-992)			
D-300	"Climbing Mount Everest" SCO World, Jan. 1995 (CRDS 5363-71)			
D-301	"Alternative Storage Interfaces Outdo SCSI Connectivity"; Computerworld, April 1995 (CRDS 5433-34)			
D-302	"The Future of Storage" (CRDS 24748-752)			

Oracle-Huawei-NetApp Ex. 1024, pg. 1966

Exhibit No.	Description	Offered	Objected	Admitted
D-303	The SPARCstorage Array Architecture - Technical White Paper (PTI 161946-162002)			
D-304	Fibre Channel Technology - Technical Brief (PTI 162003-020)			
D-305	Sun Reseller News, Volume V, Issue 26: Special Edition re SPARCSTORAGE ARRAY THE INDUSTRY'S MOST INNOVATIVE STORAGE SOLUTION (PTI 162021-041)			
D-306	Serial Optical with Fibre Channel Arbitrated Loop (SOC+) ASIC Specification, (Preliminary), Rev. 0.1 (SUN 91-319)			
D-307	Sun Microsystems Computer Company Announces the New SPARCstorage Array Model 102 Storage System (SUN 481-88)			
D-308	Sun Unveils New Highly Integrated RAID Mass Storage System-Includes Fibre Channel Interface (SUN 489-90)			
D-309	Sun SPARCstorage Array Enhancements Increase I/O Performance by 25 Percent (SUN 491-92			
D-310	Sun SPARCstorage Array 214 RSM Increases Storage Capacity and Reliability for Enterprise Environments (SUN 493-95)			
D-311	Sun Microsystems Computer Company Announces the New SPARCstorage Array Model 200 Storage System (SUN 498-507)			
D-312	IBM Packing List for Shipment of NUMA-Q Products to Ford Motor Co. Dated December 12, 1996; Sales Order No. 385310 (IBM 1-3)			
D-313	IBM List of NUMA-Q Products Shipped to Ford Motor Co. Sales Order No. 385310 (IBM 4-7)			
D-314	IBM Packing List for Shipment of NUMA-Q Products to Ford Motor Co. Dated December 12, 1996 Sales Order No. 385312 (IBM 8-10)			
D-315	IBM List of NUMA-Q Products Shipped to Ford Motor Co. Sales Order No. 385312 (IBM 11-15)			
D-316	Fibre Channel Bridge Software V1.0.0 Release Notes (NUMA-Q) (IBM 16-30)			

Oracle-Huawei-NetApp Ex. 1024, pg. 1967

Exhibit No.	Description	Offered	Objected	Admitted
D-317	Sequent Online Documentation, 12/96 (IBM 31-32)			
D-318	Sequent Online Documentation Release Notes, 12/96 (IBM 33-36)			
D-319	FC/SCSI Bridge Hardware Functional Specification, Rev. A00 (IBM 37-162)			
D-320	U.S. Patent No. 3,082,406, entitled, "Decoding Device" (L.D. Stevens) (PTI 173253-257)			
D-321	U.S. Patent No. 4,092,732, entitled, "System for Recovering Data Stored in Failed Memory Unit" (K. Ouchi) (PTI 173258-270)			
D-322	U.S. Patent No. 4,947,367, entitled, "System for Converting Digital Data from Magnetic Tape Format Apparatus and Method for Converting a Sequentially Accessible Magnetic Tape Data Format to Directly Accessible Write-Once Disk Data Format to Worm Optical Disk Format" (Chang et al) (PTI 173271-282)			
D-323	U.S. Patent No. 5,072,378, entitled, "Direct Access Storage Device with Independently Stored Parity" (P. Manka) (PTI 173283-317)			
D-324	U.S. Patent No. 5,465,382, entitled, "System and Method for Mapping Directly Accessible Magnetic DASD Storage to Fixed Block Optical Storage" (Day, III et al) (PTI 173318-329)			
D-325	Fibre Channel to SCSI Bridge Functional Requirements (PTI 21175-180)			
D-326	Source Code Module ialib.c (PTI 116351-356)			
D-327	Source Code Module fctcrit.c (PTI 116357-361)			
D-328	VPS Test Specification, Ver. 1.00 dated October 4, 1999 (PTI 116362-370)			
D-329	Source Code Module fctarg.c (PTI 116387-389)			
D-330	ITL Access Control Design Specification, Ver. 1.10 (PTI 116401-414)			
D-331	ITL Access Control Requirement Specification, Ver. 1.06 (PTI 116419-426)			

Oracle-Huawei-NetApp Ex. 1024, pg. 1968

Exhibit No.	Description	Offered	Objected	Admitted
D-331a	ITL Access Control Requirement Specification, Ver. 1.04 (PTI 116427-433)			
D-332	Lab Notebook #1209 of Gregory Prestas dated February 18, 1998 (PTI 123221-344)			
D-333	Lab Notebook of Gregory Prestas (PTI 88216-245)			
D-334	Pathlight physical exhibit containing software modules relating to VPS (PTI 167575)			
D-335	Demonstrative: HSG Controller Block Diagram – FibreChannel HSx71/2 Controller Architecture (CPQ 1670)			
D-336	Demonstrative: Block Diagram Coronado-Lite FC-SCSI Bridge (AEC-7312) (CNS 178642)			
D-337	Declaration of Vicom Custodian of Records, Horatio Lo			
D-338	Declaration of Western Digital Custodian of Records, Michael Ray			
D-339	Declaration of TD Systems Corporation Custodian of Records, Peter A. Brewster			
D-340	Declaration of Computer Network Technology Inc. Custodian of Records, Bill Collette			
D-341	SYM53C810A PCI-SCSI I/O Processor (PTI 172804-173027) Databook Version 3.0			
D-342	SYM53C825A/825AE PCI-SCSI I/O Processor (PTI 173028-173252) Databook Version 2.0			
D-343	Media Server Interface Specification – Preliminary Draft- Version 0.00			
D-344	Maintenance In Out Change Spec, Version 1.10 (PTI 183559-581)			
D-345	Article Entitled, "Empirical Evidence on the Validity of Litigated Patents" by J. Allison and M. Lemley AIPLA Quarterly Journal, Vol. 26, No. 3, pp. 185-211, June 1998 (DeWilde 83; Levy 1) Entire Article (PTI 183582 – 644)			
D-346	Compaq CP4100 (Shiner) OEM Requirement, Revision 0.6 (Bardach Ex 26)			

Oracle-Huawei-NetApp Ex. 1024, pg. 1969

Exhibit No.	Description	Offered	Objected	Admitted
D-347	Draft Development Agreement Between Compaq and Crossroads (Bardach Ex 27)			
D-348	Letter B. Bardach to D. Schmidt re: Exclusivity Agreement (Bardach Ex 28)			
D-349	Emails D. Schmidt to K. Hudson, J. Spencer re: Exclusivity Agreement (Bardach Ex 29)			
D-350	Crossroads Financial Reporting Package, July, 2000 ((Fiscal Q3' 00) CRDS 51873 – 51977 - Alvarez Ex 3)			
D-351	Leads Spreadsheet (Quisenberry Ex 5)			
D-352	Fibre Channel Article (Quisenberry Ex 6)			
D-353	Crossroads Purchase Order Log (Quisenberry Ex 9)			
D-354	Dale Quisenberry Notebook (Quisenberry Ex 16)			

June 5, 2001

Respectfully Submitted,

By _____

David D. Bahler, Esq. (SBN 01513100)
Stephen D. Dellett, Esq. (SBN 05652490)
Michael C. Barrett, Esq. (SBN 24006803)
Mark T. Garrett, Esq. (SBN 24007225)
FULBRIGHT & JAWORSKI, L.L.P.
600 Congress Avenue, Suite 2400
Austin, TX 78701-3248
Telephone: (512) 474-5201
Facsimile: (512) 536-4598

ATTORNEYS FOR DEFENDANT/
COUNTER-PLAINTIFF

Oracle-Huawei-NetApp Ex. 1024, pg. 1970

CERTIFICATE OF SERVICE

I hereby certify that on June 5, 2001, I caused copies of the foregoing DEFENDANT PATHLIGHT TECHNOLOGY, INC.'S THIRD SUPPLEMENTAL TRIAL EXHIBIT LIST to be served on all counsel of record, as indicated below:

Alan D Albright, Esq.
John Allcock, Esq.
GRAY CARY WARE
& FREIDENRICH, L.L.P.
1221 South MoPac Expressway, Suite 400
Austin, TX 78746-6875

VIA Hand Delivery

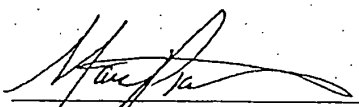

Marc Pickett

25038740.1

Oracle-Huawei-NetApp Ex. 1024, pg. 1971

C43

IN THE UNITED STATES DISTRICT COURT
FOR THE WESTERN DISTRICT OF TEXAS
AUSTIN DIVISION

CROSSROADS SYSTEMS, (TEXAS), INC., a Texas Corporation, Plaintiff v. CHAPARRAL NETWORK STORAGE, INC. a Delaware corporation, Defendant.	CIVIL ACTION NO. A-00CA-217-SS HONORABLE JUDGE SAM SPARKS DEMAND FOR JURY TRIAL

DEFENDANT CHAPARRAL NETWORK STORAGE, INC.'S
FIRST SUPPLEMENTAL TRIAL EXHIBIT LIST

One or more of the exhibits listed below may be used for cross-examination purposes only. Chaparral reserves the right to supplement its trial exhibit list as necessary.

Exhibit No.	Description	Offered	Objected	Admitted
D-1	Certified Copy of U.S. Patent No. 5,941,972; entitled, "Storage Router and Method for Providing Virtual Local Storage" (Hoese et al)			
D-2	Certified Copy of File History of U.S. Patent No. 5,941,972; entitled, "Storage Router and Method for Providing Virtual Local Storage" (Hoese et al)			
D-3	U.S. Patent No. 5,748,924, entitled, "Method and Apparatus for Transferring Data from SCSI Bus to Serial Device and From Serial Device to SCSI Bus" (Liorens et al)			
D-4	U.S. Patent No. 5,768,623, entitled, "System and Method for Sharing Multiple Storage Arrays by Dedicating Adapters as Primary Controller and Secondary Controller for Arrays Reside in Different Host Computers" (Judd et al) (Hodges Ex 6)			

C. A. S. 01

Oracle-Huawei-NetApp Ex. 1024, pg. 1972

Exhibit No.	Description	Offered	Objected	Admitted
D-5	U.S. Patent No. 5,809,328, entitled, "Apparatus for Fibre Channel Transmission having Interface Logic, Buffer Memory, Multiplexor/Control Device, Fibre Channel Controller, Gigabit Link Module, Microprocessor and Bus Control Device" (Nogales et al)			
D-6	U.S. Patent No. 5,812,754, entitled, "Raid System with Fibre Channel Arbitrated Loop" (Lui et al)			
D-7	U.S. Patent No. 5,835,496, entitled, "Method and Apparatus for Data Alignment" (Yeung et al)			
D-8	U.S. Patent No. 5,848,251, entitled, "Secondary Channel for Command Information for Fibre Channel System Interface Bus" (Lomelino et al)			
D-9	Power of Attorney Documents Filed with PTO for Patent Application 001,799 (Smith Ex 18)			
D-10	Inventor Declarations and Power of Attorney Filed with PTO			
D-11	U.S. Patent No. 5,941,972; entitled, "Storage Router and Method for Providing Virtual Local Storage" (Hoese et al) (Hulsey Ex 1)			
D-12	Datasheet for CrossPoint 4100 Fibre Channel to SCSI Router (Dedek Ex 41 (ANCT 117-120))			
D-13	Symbios Logic - Software Interface Specification Series 3 SCSI RAID Controller Software Release 02.xx (Engelbrecht Ex 2 (LSI 1421-1658))			
D-14	Symbios Logic – Hardware Functional Specification for the Symbios Logic Series 3 Fibre Channel Disk Array Controller Model 3701 (Engelbrecht Ex 3 (LSI 1659-1733))			
D-15	Purchase Order and Shipping List to Transoft Corporation (Engelbrecht 11 (LSI 2822-24))			
D-16	News Release- Symbios Logic to Demonstrate Strong Support for Fibre Channel at Fall Comdex (Engelbrecht 12 (LSI 2785-86))			

Oracle-Huawei-NetApp Ex. 1024, pg. 1973

Exhibit No.	Description	Offered	Objected	Admitted
D-17	OEM Datasheet on the 3701 Controller (Engelbrecht 13 (LSI 1837-38))			
D-18	RAID Manager 5 with RDAC 5 for UNIX V.4 - User's Guide (MetaStore) (LSI 1853-2294)			
D-19	Claim Chart: Detailed Analysis of Invalidity of Claims in View of the 3701 Product			
D-19A	Block Diagram SYMBIOS LOGIC Series 3 Fibre Channel Disk Array Controller, Model 3701 Hardware Functional Specification (LSI 1670)			
D-20	Nondisclosure Agreement Between Adaptec and Crossroads Dated 10/17/96 (Quisenberry Ex 25 (CRDS 8196))			
D-21	Organizational Presentation on the External Storage Group (Lavan Ex 1 (CNS 182242-255))			
D-22	Bridge Phase II Architecture Presentation (Lavan Ex 2 (CNS 182287-295))			
D-23	Attendees/Action Items from 4/12/96 Meeting at BTC (Lavan Ex 3 (CNS 182241))			
D-24	Brooklyn Hardware Engineering Requirements Documents, Revision 1.4 (Lavan Ex 4 (CNS 178188-211))			
D-25	Brooklyn Single-Ended SCSI RAID Bridge Controller Hardware OEM Manual, Revision 2.1 (Lavan Ex 5 (CNS 177169-191))			
D-26	Brooklyn SCS-SCSI Intelligent External RAID Bridge Definition Phase Exit Documentation (Lavan Ex 6 (CNS 177397-611))			
D-27	Coronado Hardware Engineering Requirements Document, Revision 0.0 (Lavan Ex 7 (CNS 176917-932))			
D-28	ESS/FPG Organization (Lavan Ex 8 (CNS 178639-652))			
D-29	Adaptec MCS ESS Presents: Intelligent External I/O Raid Controllers "Bridge" Strategy (Lavan Ex 9 (CNS 178606-638))			

Oracle-Huawei-NetApp Ex. 1024, pg. 1974

Exhibit No.	Description	Offered	Objected	Admitted
D-30	AEC-7313 Fibre Channel Daughter Board (for Brooklyn) Engineering Specification, Revision 1.0 (Lavan Ex 10 (CNS 176830-850))			
D-31	Physical Exhibit - First Coronado Prototype (Lavan Ex 11)			
D-32	Physical Exhibit -Rev. B PCB, 10-96 (Lavan Ex 12)			
D-33	Physical Exhibit - Complete Brooklyn Product with a Single-Ended SCSI Motherboard (Lavan Ex 13)			
D-34	Bill of Material (Lavan Ex 14 (CNS 177211-214))			
D-35	AEC-4412B, AEC-7412/B. External RAID Controller Hardware OEM Manual, Revision 2.0 (Lavan Ex 15 (CNS 177082-123))			
D-36	Coronado II, AEC-7312A Fibre Channel Daughter (for Brooklyn) Hardware Specification, Revision 1.2 (Lavan Ex 16 (CNS 177192-210))			
D-37	AEC-4412B, AEC7412/3B External RAID Controller Hardware OEM Manual, Revision 3.0 (Lavan Ex 17 (CNS 177124-165))			
D-38	Memo Dated 8/15/97 to AEC-7312A Evaluation Unit Customers re: B001 Release Notes (Lavan Ex 18 (CNS 182878-879))			
D-39	Brooklyn Main Board (AES-0302) MES Schedule (Lavan Ex 19 (CNS 177759-763))			
D-40	News Release – Adaptec Adds Fibre Channel Option to its External RAID Controller Family (Lavan Ex 20 (CNS 182932-934))			
D-41	AEC-4412B/7412B User's Guide, Rev. A (Lavan Ex 21)			
D-42	Memos T. Lavan to J. Walker re: Weekly Status (Lavan Ex 213)			
D-43	Memo B. Morris to M. Gluck, J. Walker, T. Lavan, B. Allison and M. Hardy re: Product Priority List (Lavan Ex 214)			
D-44	Memo D. Matthews to T. Lavan re: LUN Zoning and Extended Copy Key ERDs (Lavan Ex 215)			
D-45	G6322/G7324 External RAID Board Controller-User's Guide (Lavan Ex 216)			

Oracle-Huawei-NetApp Ex. 1024, pg. 1975

Exhibit No.	Description	Offered	Objected	Admitted
D-46	Data Book- AIC-7895 PCI Bus Master Single Chip SCSI Host Adapter (Davies Ex 1 (CNS 182944-964))			
D-47	Data Book- AIC-1160 Fibre Channel Host Adapter ASIC (Davies Ex 2 (CNS 181800-825))			
D-48	Viking RAID Software (Davies Ex 3 (CNS 180969-181026))			
D-49	Header File with Structure Definitions (Davies Ex 4 (CNS 180009-018))			
D-50	C++ SourceCode for the SCSI Command Handler (Davies Ex 5 (CNS 179136-168))			
D-51	Header File Data Structure (Davies Ex 6 (CNS 179997-180008))			
D-52	SCSI Command Handler (Davies Ex 7 (CNS 179676-719))			
D-53	Coronado: Fibre Channel to SCSI Intelligent RAID Controller Product Brief (Kalwitz Ex 1 (CNS 182804-805))			
D-54	Bill of Material (Kalwitz Ex 2 (CNS 181632-633))			
D-55	Emails Dated 1/13-3/31/97 from P. Colline to Mo re: Status Reports (Kalwitz Ex 3 (CNS 182501-511))			
D-56	Hardware Schematics for the Fibre Channel Daughtercard for Coronado (Kalwitz Ex 4 (CNS 181639-648))			
D-57	Adaptec Schematics re AAC-340 (Kalwitz Ex 14 (CNS 177215-251))			
D-58	Bridge Product Line Review (Manzanares Ex 3 (CNS 177307-336))			
D-59	AEC Bridge Series Products-Adaptec External Controller RAID Products Pre-Release Draft, v.6 (Manzanares Ex 4 (CNS 174632-653))			
D-60	Claim Chart: Detailed Analysis of Invalidity of Claims in View of the Coronado Product			
D-61	Demonstrative: Block Diagram Coronado-Lite FC-SCSI Bridge (AEC-7312) (CNS 178642)			

Oracle-Huawei-NetApp Ex. 1024, pg. 1976

Exhibit No.	Description	Offered	Objected	Admitted
D-62	HSx70 System Specification, Steve Sicola, Revision 4 (Pherson Ex 2 (CPQ 1648-1707))			
D-63	Claim Chart: Detailed Analysis of Invalidity of Claims in View of the HSx72 Product			
D-64	HSG Controller Block Diagram – FibreChannel HSx71/2 Controller Architecture (CPQ 1670)			
D-65	Email Dated 1/17/97 from G. Dolkas to J. Dunning re: Minutes of 1/13 Phone Conference (Dunning Ex 1 (HP 156-57))			
D-66	Email Dated 1/27/97 from G. Dolkas to J. Dunning re: Minutes of 1/20 Phone Conference Dunning Ex 2 (HP 159-60))			
D-67	Email Dated 2/1/97 from G. Dolkas to J. Dunning re: Minutes of 1/27 Phone Conference (Dunning Ex 3 (HP 161-62))			
D-68	Email Dated 3/11/97 from G. Dolkas to J. Dunning re: Minutes of 3/10 Phone Conference (Dunning Ex 4 (HP 177-78))			
D-69	Email Dated 4/7/97 from G. Dolkas to J. Dunning re: Minutes of 3/31/ Phone Conference (Dunning Ex 5 (HP 203-04))			
D-70	Email Dated 4/19/97 from G. Dolkas to J. Dunning re: Minutes of 4/14 Conference (Dunning Ex 6 (HP 215-16))			
D-71	Email Dated 5/5/97 from G. Dolkas to J. Dunning re: Minutes from 4/28 Phone Conference (Dunning Ex 7 (HP 217-18))			
D-72	Email Dated 5/12/97 from G. Dolkas to J. Dunning re: Minutes of 5/5 Phone Conference (Dunning Ex 8 (HP 220-21))			
D-73	Email Dated 5/19/97 from G. Dolkas to J. Dunning re: Minutes from 5/12 Phone Conference (Dunning Ex 9 (HP 223-24))			
D-74	Email Dated 7/28/97 from J. Dunning to G. Dolkas re: A thought About Additional Cost Savings (Dunning Ex 10 (HP 236-38))			
D-75	Email Dated 6/17/97 from J. Dunning to G. Dolkas re: Send us the Code (Dunning Ex 11 (HP 272))			

Exhibit No.	Description	Offered	Objected	Admitted
D-76	Hewlett-Packard Service and User Guide Manual for HP A330A, A3511A, A3511Z Fibre Channel SCSI Multiplexor (Preliminary) (Dunning Ex 12 (CPQ 1000-1144))			
D-77	Hewlett-Packard Service and User Manual for Fibre Channel SCSI Multiplexor (Dunning Ex 13 (HP 335-486))			
D-78	Hewlett-Packard Roseville Site Property Pass for Brian Smith (Dunning Ex 14 (HP 489))			
D-79	Distribution Agreement Between Hewlett-Packard and Crossroads (Dunning Ex 15 (HP 326-33))			
D-80	Hewlett-Packard Preliminary Technical Data Sheet for the HP A3308A, A3511A, A3511AZ Fibre Channel-SCSI Multiplexor (Dunning Ex 16 (HP 492-93))			
D-81	Hewlett-Packard Preliminary Technical Data Sheet for the HP A330A, A3511A, A3511AZ Fibre Channel-SCSI Multiplexor (Dunning Ex 17 (HP 490))			
D-82	Background on Fibre Channel SCSI (Dunning Ex 18 (HP 1, 3, 5, 7, 9, 11))			
D-83	Background on Fibre Channel SCSI (HP 1-12)			
D-84	HPFC-5000 Tachyon User's Manual, First Edition (PTI 172419-839)			
D-85	Hewlett Packard's TachLite Fibre Channel Mass Storage Interface Controller - User's Manual, Draft Ver. 2.5 (CRDS 6829-7061)			
D-86	American National Standard – Small Computer Systems Interface (SCSI); Rev. 17-B dated March 3, 1986 (PTI 166556-563)			
D-87	X3T10 994D - (Draft) Information Technology: SCSI-3 Architecture Model, Rev. 18 (PTI 165977-166049)			
D-88	X3T10 Project 1047D: Information Technology - SCSI-3 Controller Commands (SCC), Rev. 6c (PTI 166400-546)			

Oracle-Huawei-NetApp Ex. 1024, pg. 1978

Exhibit No.	Description	Offered	Objected	Admitted
D-89	X3T10 995D - (Draft) SCSI-3 Primary Commands, Rev. 11 (Wanamaker Ex 5 (PTI 166050-229))			
D-90	Fibre Channel - Physical and Signaling Interface (FC-PH): X3T11/Project 755D, Rev. 4.3 (PTI 168209-685)			
D-91	Fibre Channel - Physical and Signaling Interface (FC-PH): X3T11/Project 901D, Rev. 7.4 (PTI 167975-168162)			
D-92	X3.269-199X (Draft) - Information Systems - dpANS Fibre Channel Protocol for SCSI, Rev. 012 (PTI 166230-304)			
D-93	Small Computer System Interface (SCSI), X3T9.2 /82-2, Revision 1B, 16 December 1985 (PTI 171715-904)			
D-94	Small Computer System Interface-2 (SCSI-2), X3T9.2 Project 375D, Revision 10L, 7 September 1993 (PTI 171905-172405)			
D-95	SCSI-3 Primary Commands, T10 Project 995D, Revision 11A, 28 March 1997 (PTI 167405-430)			
D-96	Project T10: SCSI-3 Standards Architecture Roadmap and FC-PH, Rev 4.3: Figure 1 - Document Relationship re SCSI-3 Fibre Channel Protocol (PTI 162110-111)			
D-97	The RAIDbook - A Source Book for Disk Array Technology, 4th Edition (PTI 167299-404)			
D-98	Report of the Working Group on Storage I/O for Large Scale Computing; Department of Computer Science Duke University: CS-1996-21 (PTI 173330-347)			
D-99	VBAR Volume Backup and Restore (CRDS 12200-202)			
D-100	Report of the Working Group on Storage I/O for Large Scale Computing, ACM Computing Surveys, Vol. 28, No. 4, pp. 1-15 (CRDS 39993-40007)			
D-101	SYM53C810A PCI-SCSI I/O Processor (PTI 172840-173027) Databook Version 2.0			

Oracle-Huawei-NetApp Ex. 1024, pg. 1979

Exhibit No.	Description	Offered	Objected	Admitted
D-102	SYM53C825A/825AE PCI-SCSI I/O Processor (PTI 173028-173252) Databook Version 3.0			
D-103	U.S. Patent No. 6,260,120 B1 entitled, "Storage Mapping and Partitioning Among Multiple Host Processors in the Presence of Login State Changes and Host Controller Replacement" ((Blumeneau et al) CNS 186019-084)			
D-104	U.S. Patent No. 6,219,771 B1 entitled, "Data Storage Apparatus with Improved Security Process and Partition Allocation Functions" ((Kikuchi et al) CNS 186085-095)			
D-105	European Patent No. EP 0827059A2 entitled, "Disk Apparatus" ((Kikuchi et al) CNS 186096-107)			
D-106	Japanese Patent No. 8-230895. Foreign Application Priority Document to U.S. Patent No.6,219,771 B1 ((Kikuchi et al) CNS 186108-115)			
D-107	U.S. Patent No. 6,145,006 entitled, "Method and Apparatus for Coordinating Locking Operations of Heterogeneous Host Computers Accessing a Storage Subsystem" ((Vishlitsky et al) CNS 186116-126)			
D-108	Hewlett-Packard SSD and Crossroads CP4200 License Agreement (Alvarez Ex 4 (CRDS 2273-90))			
D-109	Hewlett-Packard Royalty Revenue Report (Alvarez Ex 6)			
D-110	Press Release, "Crossroads Announces Expectations for Fiscal Third Quarter" (Root Ex 1)			
D-111	Crossroads SWOT Analysis (Smith Ex 21 (CRDS 39777-782))			
D-112	Crossroads Financial Reporting Package, July, 2000 ((Fiscal Q3' 00) CRDS 51873 – 51977 - Alvarez Ex 3)			
D-113	Chaparral Income Statement Quarter for the Quarter Ended 06/30/01; PDX 278			
D-114	Chaparral Q1 FY '02 Gross Router Revenue; PDX 281			
D-115	Chaparral Income Statement for the Year Ended, 03/31/01; PDX 282			

Oracle-Huawei-NetApp Ex. 1024, pg. 1980

Exhibit No.	Description	Offered	Objected	Admitted
D-116	Chaparral Q4 '01 Gross Router and Gross RAID Revenue; PDX 284			
D-117	Chaparral LUN Zoning Shipments to Date; PDX 285			
D-118	Chaparral CNSi FC-SCSI Product Shipments w/LUN Zoning; PDX 287			
D-119	Technology Cross-License Agreement Between Adaptec and Chaparral; PDX 298			
D-120	Chaparral Income Statement FY'00; PDX 300			
D-121	Chaparral Income Statement FY'01; PDX 301			
D-122	Chaparral Income Statement FY'02; PDX 302			
D-123	Crossroads Regulatory Label (Sims Ex 9 (CRDS 51996-201; 52036-037))			
D-124	'972 Product Label Listings; Sims Ex 12			
D-125	'972 Regulatory Label; Sims Ex 13			
D-126	Signed Exclusivity Agreement Between Compaq and Crossroads Dated 8/17/98 (LiVolsi Ex 3 (CRDS 1484-94))			
D-127	Catamaran Marketing Requirements Documents, Revision 1.0; LiVolsi Ex 4			
D-128	Storage Router Block Diagram Drawn by K. Arroyo (Arroyo Ex 11)			
D-129	Compaq CP4100 (Shiner) OEM Requirement, Revision 0.6 (Bardach Ex 26)			
D-130	Draft Development Agreement Between Compaq and Crossroads (Bardach Ex 27)			
D-131	Letter B. Bardach to D. Schmidt re: Exclusivity Agreement (Bardach Ex 28)			
D-132	Emails D. Schmidt to K. Hudson, J. Spencer re: Exclusivity Agreement (Bardach Ex 29)			
D-133	LUN Management Map Guide; Bianchi Ex 2			

Oracle-Huawei-NetApp Ex. 1024, pg. 1981

Exhibit No.	Description	Offered	Objected	Admitted
D-134	Catamaran Device Mapping, Ver. 1.2; Bianchi Ex 3			
D-135	Common Definition File for Global Configuration Data Structure ; Bianchi Ex 4			
D-136	Common Source Code for VPD/Device Mapping and Configuration; Bianchi Ex 5			
D-137	Catamaran Device Mapping, Ver. 1.2 (With Hand Written Notations); Bianchi Ex 6			
D-138	Compaq CP 4100 (Shiner) OEM Requirements; Quisenberry Ex 15			
D-139	Catamaran Marketing Requirements Document (MRD); Lutrall Ex 1 ; Quisenberry Ex 51			
D-140	Handwritten Notes of Brian Smith, February 17, 1997 (CRDS 7347-48)			
D-141	Confidential Disclosure Agreement with Hewlett-Packard Dated 9/24/96 (Smith Ex 3 (CRDS 2313))			
D-142	Purchasing and Licensing Agreement Between Hewlett-Packard and Crossroads Dated 9/22/98 (Smith Ex 7 (CRDS 29603-646))			
D-143	Preliminary Product Literature for Infinity Commstor's Fibre Channel to SCSI Protocol Bridge (Smith Ex 11; Quisenberry Ex 31 (SPLO 428-30))			
D-144	Letter Dated from J. Boykin to B. Smith re; Purchase Order for Evaluation Units from Crossroads (Smith Ex 24 (CRDS 8556-57))			
D-145	CrossPoint 4100 Fibre Channel to SCSI Router Preliminary Datasheet (Hulsey Ex 9 (CRDS 16129-130))			
D-146	Compaq and Crossroads FC to SCSI Bridge Discussion (Hoese Ex 11 (CRDS 42459-475))			
D-147	Notes for 9/96 Meeting with Compaq Computer (Smith Ex 27; Bardach Ex 2 (CRDS 13562-563))			
D-148	Compaq and Crossroads FC to SCSI Bridge Discussion (Hulsey Ex 4; Bardach Ex 3; Hoese Ex 11 (CRDS 42459-475))			

Oracle-Huawei-NetApp Ex. 1024, pg. 1982

Exhibit No.	Description	Offered	Objected	Admitted
D-149	Memo Dated 9/27/96 from B. Bardach to B. Smith re: Compaq 9/17 Meeting Summary (Bardach Ex 4 (CRDS 13559-560))			
D-150	Verrazano FC-SCSI Bridge –Product Overview (Hoese Ex 2; Quisenberry Ex 30; Bardach Ex 5 (CRDS 40807-823))			
D-151	Verrazano Software Development (Hoese Ex 3; Quisenberry Ex 34; Smith Ex 12; Bardach Ex 6 (CRDS 40925-958))			
D-152	Letter Dated 11/27/96 from B. Bardach to B. Weisickle re: Comdex Technology Suite (Bardach Ex 8 (CRDS 4969))			
D-153	CrossPoint 4400 Fibre Channel to SCSI Router Preliminary Datasheet (Bardach Ex 9; Quisenberry Ex 33 (CRDS 25606-607))			
D-154	Email Dated 10/11/96 from G. Hoese to B. Bardach re: FC-SCSI Bridge Meeting (Bardach Ex 10 (CRDS 13631))			
D-155	Fax Dated 7/22/96 from L. Petti to B. Smith re: Purchase Order from Data General for FC2S Fibre to Channel SCSI Protocol Bridge Model 11 (Smith Ex 25; Quisenberry Ex 23; Bardach Ex 11 (CRDS 8552-55; 8558))			
D-156	Email Dated 12/20/96 from J. Boykin to B. Smith re: Purchase Order for Betas in February and March (Hoese Ex 16; Quisenberry Ex 24; Bardach Ex 12 (CRDS 13644-650))			
D-157	Infinity Commstor Fibre Channel Demo for Fall Comdex, 1996 (Hoese Ex 15; Bardach Ex 13 (CRDS 27415))			
D-158	Fax Dated 12/19/96 from B. Bardach to T. Rarich re: Purchase Order Information (Bardach Ex 14; Smith Ex 16 (CRDS 4460))			
D-159	McData Fibre Channel Infrastructure Meeting in San Francisco (Hoese Ex 20; Bardach Ex 15 (CRDS 9258-71))			

Oracle-Huawei-NetApp Ex. 1024, pg. 1983

Exhibit No.	Description	Offered	Objected	Admitted
D-160	Confidential Disclosure Agreement Between Hewlett-Packard Network Server and Crossroads (Bardach Ex 18 (CRDS 2315))			
D-161	Confidential Disclosure Agreement Between Hewlett-Packard Optical Communications Division and Crossroads (Bardach Ex 19 (CRDS 2340))			
D-162	Letter Dated 10/16/96 from B. Bardach to J. Kramer re: Developing a Business Relationship with Unisys to Sell its FC-SCSI Bridge Products (Bardach Ex 22 (CRDS 5704))			
D-163	Email Dated 12/30/96 from B. Smith to B. Bardach re Teleconference Today re: Download Utility for NT, Delivery of Muxes (Bardach Ex 23 (CRDS 4970))			
D-164	Letter Dated 5/12/97 from A. Leal to B. Bardach re: Enclosing a Copy of the Executed Original OEM License and Purchase Agreement Between Hewlett-Packard and Crossroads (Smith Ex 4; Bardach Ex 30 CRDS 52581-641))			
D-165	Miscellaneous Documents Regarding Comdex (Quisenberry Ex 2 (CRDS 27415-465))			
D-166	CrossPoint 4100 Fibre Channel to SCSI Router Preliminary Datasheet (Quisenberry Ex 3 (CRDS 4933-34))			
D-167	CrossPoint 4400 Fibre to Channel to SCSI Router Preliminary Datasheet; Crossroads Company and Product Overview (Quisenberry Ex 4 (CRDS 25606; 16136))			
D-168	Leads Spreadsheet (Quisenberry Ex 5 (CRDS 35203-206))			
D-169	Fibre Channel Article (Quisenberry Ex 6 (CRDS 52429-432)			
D-170	Hewlett-Packard Roseville Site Property Pass (Quisenberry Ex 7 (CRDS 27413-414))			
D-171	B. Smith email to B. Bardach re: Teleconference Today re: Download Utility for NT, Delivery of Muxes etc. (Quisenberry Ex 8 (CRDS 4970))			

Oracle-Huawei-NetApp Ex. 1024, pg. 1984

Exhibit No.	Description	Offered	Objected	Admitted
D-172	Crossroads Purchase Order Log (Quisenberry Ex 9 (CRDS 14061-062))			
D-173	Dale Quisenberry Notebook (Quisenberry Ex 16 (CRDS 25688-724))			
D-174	Verrazano Engineering Verification Plan, Version 1.1 (Quisenberry Ex 39 (CRDS 43991-44054))			
D-175	Not Used			
D-176	Not Used			
D-177	Not Used			
D-178	Not Used			
D-179	Letter David Zinger to KPMG re: Audit Inquiry Letter from Chaparral (PDX 311 (CNS 174031-032))			
D-180	Zinger Draft Opinion for U.S. 5,941,972 (PDX 312 (CNS 1736894-923))			
D-181	Zinger Opinion for U.S. 5,941,972; Copy of U.S. Patent 5,941,972; U.S. Utility Patent Application; The SPARC Storage Array Architecture; Technical White Paper; SPARC Storage Array User's Guide; Announcement Brief; Copy of U.S. Patent No. 5,974,530 (PDX 313 (CNS 173589-893))			
D-182	Not Used			
D-183	Not Used			
D-184	Not Used			
D-185	Not Used			
D-186	Not Used			

Oracle-Huawei-NetApp Ex. 1024, pg. 1985

Exhibit No.	Description	Offered	Objected	Admitted
D-187	Not Used			
D-188	LUN Zoning for the FS2620 Router, User's Guide (PDX 333)			
D-189	Not Used			
D-190	Listing of Files (PDX 336 (CNS 187025))			
D-191	Chaparral A8526 Testing (PDX 338 (CNS 187123-219))			
D-192	07/31/01 Engineering Change Notice re G8526 – ECN No. 12-0143-001; CNS 188463-464			
D-193	07/31/01 Engineering Change Notice re FS1220 – ECN No. 12-0141-001; CNS 188465-466			
D-194	07/31/01 Engineering Change Notice re FS2620 – ECN No. 12-0142-001; CNS 188467-469			
D-195	Excerpts of Computer Source Code File Name "Passthru.C" Dated December 7, 1999 (CNS 186162-164)			
D-196	Excerpts of Computer Source Code File Name "Zone.C" Dated October 24, 2000 (CNS 186165-169)			
D-197	Chaparral Skyway Product Software Design Document (CNS 186127-144)			
D-198	Chaparral K5412/K7413 Raid User's Guide (CNS 185600-767)			
D-199	Document Entitled, "Board of Directors" Includes Financial Statements (PDX 27 (CNS 040843-864))			
D-200	NA OEM Monthly Business Review (PDX 35 (CNS 041210-244))			
D-201	Brian Allison's 1999 Third Quarter Sales Plan (PDX 38 (CNS 022120-132))			
D-202	Email B. Selinger to J. Walker re: Overpass Status (PDX 47 (CNS 039583-584))			

Oracle-Huawei-NetApp Ex. 1024, pg. 1986

Exhibit No.	Description	Offered	Objected	Admitted
D-203	Email M. Gluck to D. Trachy re: Patents (PDX 48 (CNS 041062))			
D-204	Email N. Squibb to M. Gluck re: Crossroads Patent Infringement (PDX 49 (CNS 00305-306))			
D-205	Crossroad Systems' Original Complaint (PDX 55)			
D-206	Chaparral Business Plan Copy # 50 (PDX 63 (CNS 029850-871))			
D-207	CAPI 3.0 Upgrade Functional Specification (PDX 82 (CNS 035099-117))			
D-208	CAPI Sample Application User Guide (PDX 83 (CNS 035079-081))			
D-209	CAPI-Diagram (PDX 84 (CNS 035118))			
D-210	CAPI Functional Specification-Version 3.0 (Router Errata), Configuration Application Programming Interface for Chaparral External RAID Controllers and Routers, Document Revision: 1-Preliminary (PDX 85 (CNS 042932-945))			
D-211	Advanced LUN Mapping and Host Inclusion/Exclusion Discussion (PDX 86 (CNS 045183-184))			
D-212	Advanced LUN Mapping and Host Inclusion/Exclusion Discussion, CH. 5, Preliminary (PDX 87 (CNS 087319-324))			
D-213	File Entitled, "LUN Masking/ Mapping/Zoning (PDX 91 (CNS 032839-940))			
D-214	Dell Computer, Chaparral Network Storage Fibre Channel/SCSI Routers (PDX 103 (CNS 0550-617))			
D-215	IBM Tucson, Chaparral Network Storage Fibre Channel/SCSI Routers (PDX 111 (CNS 045915-945))			
D-216	Presentation by Chaparral to EMC², Chaparral Fibre Channel-to-SCSI Routers (PDX 112 (CNS 033582-609))			
D-217	CAPI 3.0 Upgrade Functional Specification (PDX 113 (CNS 044635-654))			

Oracle-Huawei-NetApp Ex. 1024, pg. 1987

Exhibit No.	Description	Offered	Objected	Admitted
D-218	Presentation to StorageTek (PDX 117 (CNS 0444-469))			
D-219	Letter D. Zinger to KPMG RE: Audit Inquiry Letter from Chaparral (PDX 131 (CNS 174031-032))			
D-220	Configuration Application Programming Interface for Chaparral External RAID Controllers and Routers, Document Revision: R1 (PDX 135 (CNS 035082-095))			
D-221	CAPI Functional Specification, v2.8 (PDX 153 (CNS 175767-940))			
D-222	CAPI Functional Specification, v3.0 (PDX 154 (CNS 162205.782-162205.964))			
D-223	CAPI Functional Specification, v3.1 (PDX 155 (CNS 175554-765))			
D-224	Document Entitled, "capi3_chg-detail.txt" (PDX 156)			
D-225	Document Entitled, "capi2_chg_detail.txt (PDX 157)			
D-226	Document Entitled, "capi_chg_detail.txt (PDX 158)			
D-227	Screen Shots: Capi2pak.c, Capi2.h, Capicli.c (PDX 161)			
D-228	CAPI Functional Specification, Version 3.1 (PDX 233 (CNS 184737-948))			
D-229	K-Series External RAID Controllers Marketing Matrix (PDX 245 (CNS 185768-769))			
D-230	G-Series External RAID Controllers Marketing Matrix (PDX 247 (CNS 185928-929))			
D-231	Chart of RAID and Router Products (PDX 249)			
D-232	1.1 Pass Through Commands (PDX 274 (CNS 184735-736))			
D-233	CV of Kenneth Flamm (Ex.1 to Flamm Report)			
D-234	Table – Costs of implementing alternatives (iii) or (iv) divided by Chaparral's annualized 2001 sales of accused products (Ex Flamm 4 to Flamm Report)			

Oracle-Huawei-NetApp Ex. 1024, pg. 1988

Exhibit No.	Description	Offered	Objected	Admitted
D-235	Table - Price after LUN zoning was added (Ex Flamm 5 to Flamm Report)			
D-236	Econometric Analysis of Chaparral's sales data (Ex Flamm 6 to Flamm Report)			
D-237	Data Used in Econometric Analysis (CNS 188470-483)			
D-238	Price Comparisons of Bridge/Router/Gateway Routers etc. – Fibre Channel: iBuyer.net (PTI 174711-724)			
D-239	HP SCSI-to-Fibre Channel Bridges (PTI 173700)			
D-240	HP Sure Store – Magneto-Optical Storage Brochure			
D-241	Article – "HP Responds to Squeak!" (08/17/01)			
D-242	Crossroads Webpages			
D-243	Price Comparisons of Bridge/Router/Gateway Routers etc. – Fibre Channel: iBuyer.net (08/17/01)			
D-244	Valuation of a Technology by Rose Ann Dabek (1999)			
D-245	A Survey of Licensed Royalties by Stephen A. Degnan and Corwin Horton (6/97)			
D-246	A Survey of PC Technology Royalty Rates by David Guenther and John Wills (12/95)			
D-247	"Bridging the Gap from SCSI to Fibre Channel"; Henry Baltazar (2/1/99)			
D-248	Resume of Gary Stephens			
D-249	Gary Stephens Testing Documentation			
D-250	Resume of Ian Davies			
D-251	Crossroads' Original Complaint			
D-252	Crossroads' First Amended Complaint			

Oracle-Huawei-NetApp Ex. 1024, pg. 1989

Exhibit No.	Description	Offered	Objected	Admitted
D-253	LUN Management Software Specification, Revision 0.0 (Quisenberry Ex 52)			
D-254	Email B. Smith to B. Bardach re: More on the MUX, Priorities and Other (Smith Ex 5; Bardach Ex 20)			
D-255	Memo from Bruce Lambertus to Richard Speyer and Gene Nagle dated 11/10/99 (CNS 24753-754)			
D-256	Amendment to Licensing Agreement by and between Hewlett Packard and Crossroads Systems, Inc. (Regan Ex 3)			
D-257	Crossroads SWOT Analysis (Spalding Ex 3)			
D-258	Crossroads Competitive Matrix (Painter Ex 3)			
D-259	08/29/01 Engineering Change Notice re G7324 L412 – ECN No. 12-0156-001; CNS 188484-490			
D-260	08/29/01 Engineering Change Notice re G8324 L412 – ECN No. 12-0157-001; CNS 188491-494			
D-261	Chaparral Router and RAID Product Overview (CNS 184733-734)			
D-262	Chaparral FS2620 Matrix (CNS 185047-048)			
D-263	A8526 User's Guide (CNS 185195-376)			
D-264	A-Series External RAID Controller Marketing Matrix (CNS 185377-378)			
D-265	G6322/G7324/G8324 User's Guide (CNS 185404-593)			
D-266	G8324 External RAID Controller Marketing Matrix (CNS 185594-595)			
D-267	G-Series External RAID Controllers Marketing Matrix (CNS 185598-599)			
D-268	K-Series External RAID Controller Marketing Matrix (CNS 185768-769)			
D-269	G and K-Series User's Guide (CNS 185770-927)			

Oracle-Huawei-NetApp Ex. 1024, pg. 1990

Exhibit No.	Description	Offered	Objected	Admitted
D-270	G-Series External RAID Controllers Marketing Matrix (CNS 185928-929)			
D-271	Chaparral Invoice Nos. 2582, 2616, 2656 and 2703 (CNS 188551, CNS 188589, CNS 188634 and CNS 188689)			

September 2, 2001

Respectfully Submitted,

By _____

David D. Bahler, Esq. (SBN 01513100)
Stephen D. Dellett, Esq. (SBN 05652490)
Michael C. Barrett, Esq. (SBN 24006803)
Mark T. Garrett, Esq. (SBN 24007225)
FULBRIGHT & JAWORSKI, L.L.P.
600 Congress Avenue, Suite 2400
Austin, TX 78701-3248
Telephone: (512) 474-5201
Facsimile: (512) 536-4598

ATTORNEYS FOR DEFENDANT

Oracle-Huawei-NetApp Ex. 1024, pg. 1991

CERTIFICATE OF SERVICE

I hereby certify that on September 2, 2001, I caused copies of the foregoing **DEFENDANT CHAPARRAL NETWORK STORAGE, INC.'S FIRST SUPPLEMENTAL TRIAL EXHIBIT LIST** to be served on all counsel of record, as indicated below:

Alan D Albright, Esq.
John Allcock, Esq.
GRAY CARY WARE
& FREIDENRICH, L.L.P.
1221 South MoPac Expressway, Suite 400
Austin, TX 78746-6875

VIA E-MAIL and Hand Delivery on 9/3/01

Marc Pickett

25069163.1

Oracle-Huawei-NetApp Ex. 1024, pg. 1992

IN THE UNITED STATES DISTRICT COURT
FOR THE WESTERN DISTRICT OF TEXAS
AUSTIN DIVISION

CROSSROADS SYSTEMS, (TEXAS), INC., a Texas Corporation,

Plaintiff/Counter-Defendant,

v.

PATHLIGHT TECHNOLOGY, INC. a Delaware corporation,

Defendant/Counter-Plaintiff.

CIVIL ACTION NO. A-00CA-248-SS

DEMAND FOR JURY TRIAL

DEFENDANT PATHLIGHT TECHNOLOGY INC.'S
THIRD SUPPLEMENTAL TRIAL EXHIBIT LIST

One or more of the exhibits listed below may be used for cross-examination purposes only. Pathlight reserves the right to supplement its trial exhibit list as necessary. Pathlight hereby supplements its trial exhibit list with exhibits D-350 – D-355.

Exhibit No.	Description	Offered	Objected	Admitted
D-1	Certified Copy of U.S. Patent No. 5,941,972; entitled, "Storage Router and Method for Providing Virtual Local Storage" (Hoese et al)			
D-2	Certified Copy of File History of U.S. Patent No. 5,941,972; entitled, "Storage Router and Method for Providing Virtual Local Storage" (Hoese et al)			
D-3	U.S. Patent 5,748,924, entitled, "Method and Apparatus for Transferring Data from SCSI Bus to Serial Device and From Serial Device to SCSI Bus" (Liorens et al)			
D-4	U.S. Patent 5,768,623, entitled, "System and Method for Sharing Multiple Storage Arrays by Dedicating Adapters as Primary Controller and Secondary Controller for Arrays Reside in Different Host Computers" (Judd et al) (Hodges Ex 6)			

Oracle-Huawei-NetApp Ex. 1024, pg. 1993

Exhibit No.	Description	Offered	Objected	Admitted
D-5	U.S. Patent 5,809,328, entitled, "Apparatus for Fibre Channel Transmission having Interface Logic, Buffer Memory, Multiplexor/Control Device, Fibre Channel Controller, Gigabit Link Module, Microprocessor and Bus Control Device" (Nogales et al)			
D-6	U.S. Patent 5,812,754, entitled, "Raid System with Fibre Channel Arbitrated Loop" (Lui et al)			
D-7	U.S. Patent 5,835,496, entitled, "Method and Apparatus for Data Alignment" (Yeung et al)			
D-8	U.S. Patent 5,848,251, entitled, "Secondary Channel for Command Information for Fibre Channel System Interface Bus" (Lomelino et al)			
D-9	Hewlett-Packard SSD and Crossroads CP4200 License Agreement (Alvarez Ex 4 (CRDS 2273-90))			
D-10	Hewlett-Packard Royalty Revenue Report (Alvarez Ex 6)			
D-11	Crossroads Regulatory Label (Sims Ex 9 (CRDS 51996-201; 52036-037))			
D-12	Press Release, "Crossroads Announces Expectations for Fiscal Third Quarter" (Root Ex 1)			
D-13	U.S. Patent No. 5,941,972; entitled, "Storage Router and Method for Providing Virtual Local Storage" (Hoese et al (Hulsey 1))			
D-14	Compaq and Crossroads FC to SCSI Bridge Discussion (Hulsey Ex 4; Bardach Ex 3; Hoese Ex 11 (CRDS 42459-475))			
D-15	Emulex Fibre Channel Information Series Volume 1 (Hulsey Ex 5 (CRDS 23784-791))			
D-16	Ancot Corporation Fibre Channel to SCSI Bridge Preliminary Datasheet (Hulsey Ex 6 (CRDS 23859-860))			
D-17	Ancot Corporation Fibre Channel to SCSI Bridge Preliminary Datasheet w/Attachments (Hulsey Ex 7 (CRDS 22759-767))			

Oracle-Huawei-NetApp Ex. 1024, pg. 1994

Exhibit No.	Description	Offered	Objected	Admitted
D-18	Article entitled, "Storage Area Networking-The Network Behind the Server" (Tang) (Hulsey Ex 8 (CRDS 16302-307))			
D-19	CrossPoint 4100 Fibre Channel to SCSI Router Preliminary Datasheet (Hulsey Ex 9 (CRDS 16129-130))			
D-20	Verrazano FC-SCSI Bridge –Product Overview (Hoese Ex 2; Quisenberry Ex 30; Bardach Ex 5 (CRDS 40807-823))			
D-21	Verrazano Software Development (Hoese Ex 3; Quisenberry 34; Smith Ex 12; Bardach Ex 6 (CRDS 40925-958))			
D-22	Email Dated 12/18/96 from B. Smith to B. Bardach re: More on the MUX, Priorities and Other (Hoese Ex 8; Smith Ex 5; Bardach Ex 20 (CRDS 4983-84))			
D-23	Compaq and Crossroads FC to SCSI Bridge Discussion (Hoese Ex 11 (CRDS 42459-475))			
D-24	Infinity Commstor Fibre Channel Demo for Fall Comdex, 1996 (Hoese Ex 15; Bardach Ex 13 (CRDS 27415))			
D-25	Email Dated 12/20/96 from J. Boykin to B. Smith re: Purchase Order for Betas in February and March (Hoese Ex 16; Quisenberry Ex 24; Bardach Ex 12 (CRDS 13644-650))			
D-26	McData Fibre Channel Infrastructure Meeting in San Francisco (Hoese Ex 20; Bardach Ex 15 (CRDS 9258-71))			
D-27	McData Corporation's Fibre Channel Network Switching Presentation dated June 28, 1995 (CRDS 9229-34)			
D-28	Verrazano Manufacturing Plan (Russell Ex 8; Quisenberry Ex 35; Bardach Ex 7 (CRDS 39702-710))			
D-29	Letter Dated 4/8/95 from J. Dedek to R. Lenz re: FC-SCSI Bridge (Dedek Ex 3 (ANCT 853-57))			
D-30	The FSB 8000 Bridge: Application Note J. Dedek (Dedek Ex 4 (ANCT 346-47))			

Oracle-Huawei-NetApp Ex. 1024, pg. 1995

Exhibit No.	Description	Offered	Objected	Admitted
D-31	Memo Dated 11/10/95 from N. Wannamaker to J. Dedek re: Bridge Usage (Dedek Ex 5 (ANCT 573))			
D-32	Block Diagram of Low Cost FC/SCSI Bridge #FSB-8001 (Dedek Ex 6 (ANCT 565-66))			
D-33	Model FSB 8001/8010 Fibre Channel to SCSI Bridge (Dedek Ex 7 (ANCT 353-54))			
D-34	Memo Dated 2/9/96 from T. Nguyen to C. Lynch re: SCSI to FC Bridge (FCB-8000) (Dedek Ex 8 (ANCT 1685-86))			
D-35	Memo Dated 2/10/96 from J. Anthony to J. Dedek re: FSB-8000/East Coast Trip Early March (Dedek Ex 9 (ANCT 401-06))			
D-36	FSB-8001 266M Bridge and BOM Report (Dedek Ex 10 (ANCT 576-80))			
D-37	Physical Exhibit of Ancot Product FSB-8001 Bridge, Version 3 (Dedek Ex 11)			
D-38	Physical Exhibit of Ancot Product FSB-800 Bridge, Version 3 (Dedek Ex 12)			
D-39	Ancot Document Bearing Method A and Method B with Chart Showing Proposed Implementation (Dedek Ex 13 (ANCT 1145-46))			
D-40	Memo Dated 4/6/96 from N. Wanamaker to J. Koenig, J. Dedek, M. Hale re: FSB800X Status (Dedek Ex 14 (ANCT 545-47))			
D-41	Fax Dated 3/29/96 from J. Dedek to R. Yomtonbiau re: FC/SCSI Bridges w/Attached Tables (Dedek Ex 15 (ANCT 600-08))			
D-42	Fax Dated 5/3/96 from J. Dedek to J. Anthony re: Encore FC Bridge Order (Dedek Ex 16 (ANCT 1101-03))			
D-43	FSB-8001/8010 Datasheet (Dedek Ex 17 (ANCT 348-50))			
D-44	Memo Dated 6/28/96 from Jim to Jan, Chris and Dean re: DEC-FC Bridge Opportunity, 6/27/96 Meeting (Dedek Ex 18 (ANCT 1212-13))			

Oracle-Huawei-NetApp Ex. 1024, pg. 1996

Exhibit No.	Description	Offered	Objected	Admitted
D-45	Memo Dated 8/7/96 from Jim to Jan, Tom, Chris, Dean and FC Bridge Engineering re: DEC-FC Bridge, 8/7 Meeting (Dedek Ex 19 (ANCT 1302-06))			
D-46	Memo Dated 8/19/96 from Jim to Jan, Tom, Chris, Dean, FC Bridge Engineering, Weil, Jozef and Gary re: DEC-FC Bridge, 8/16 Review Meeting (Dedek Ex 20 (ANCT 3546-51))			
D-47	Report from Elliot Laboratories (Dedek Ex 21 (ANCT 1581-95))			
D-48	Memo Dated 10/30/96 from Jim to Jan re: Neil-Important that he remain at DEC Next Week (Dedek Ex 22 (ANCT 1230))			
D-49	Memo Dated 10/30/96 from Jim to Jan, Dean and Tom re: DEC, Order Status for 34 Bridges (Dedek Ex 23 (ANCT 1231))			
D-50	Printout of Disk, FSB-8000 Manual (Dedek Ex 24 (ANCT 4118))			
D-51	Printout of Disk, FSB-8000 Specs (Oct-Dec) (Dedek Ex 25 (ANCT 4119))			
D-52	FSB-8001 Schematics (Dedek Ex 26 (ANCT 4037-63))			
D-53	Programming Language for the Field Programmable Gate Arrays Used in the 8100 Bridge (Dedek Ex 27 (ANCT 2072-89; 2105-11; 3515-22))			
D-54	Folder entitled, "FCS 266" (Dedek Ex 28 (ANCT 2181-98))			
D-55	Folder entitled, "Low Cost FCS 266" with Attached Email of 4/26/96 from N. Wanamaker to S. Holt re: 53C770 Issues (Dedek Ex 29 (ANCT 2478; 2524-31; 2537-38))			
D-56	Folder entitled, "FSB 8010/CPU-SE" (Dedek Ex 30 (ANCT 2626; 2664-73))			
D-57	Folder entitled, "XMIT Chip" (Dedek Ex 31 (ANCT 2887-2948))			

Oracle-Huawei-NetApp Ex. 1024, pg. 1997

Exhibit No.	Description	Offered	Objected	Admitted
D-58	Folder entitled, "RCV Chip" (Dedek Ex 32 (ANCT 2972; 2975-3016; 3217-22))			
D-59	Folder entitled, "FSB 8001 XMIT FPGA" (Dedek Ex 33 (ANCT 3932-72))			
D-60	Folder entitled, "FSB 8001 RCVR FPGA" (Dedek Ex 34 (ANCT 3973-4024))			
D-61	Draft Specification Ancot FSB-8001 Bridge (Dedek Ex 35 (ANCT 771-809))			
D-62	Engineering Plan FC/SCSI Bridge FSB-8001 (Dedek Ex 36 (ANCT 810-32))			
D-63	FSB 8001 Memory Map and Register Descriptions (Dedek Ex 37 (ANCT 4064-70))			
D-64	FSB 8001 Hardware Architecture and Theory of Operation (Dedek Ex 38 (ANCT 4025-36))			
D-65	FSB 8001P Hardware Architecture and Theory of Operation (Dedek Ex 39 (ANCT 3583-94))			
D-66	Letter Dated 4/11/97 from J. Dedek to B. Smith (Dedek Ex 40 (ANCT 35-36))			
D-67	Datasheet for CrossPoint 4100 Fibre Channel to SCSI Router (Dedek Ex 41 (ANCT 117-120))			
D-68	Letter Dated 5/16/97 from C. Schwenker to J. Dedek re: N. Wanamaker's Employment with Crossroads and Ancot's Trade Secret Concerns (Response to J. Dedek's Letter to B. Smith of 4/11/97) (Dedek Ex 42 (ANCT 32-34))			
D-69	Physical Exhibit of Ancot Product FSB-8001 Bridge (Dedek Ex 43)			
D-70	Drawing by Jan Dedek (Dedek Ex 44)			
D-71	Article Entitled, "Empirical Evidence on the Validity of Litigated Patents" by J. Allison and M. Lemley AIPLA Quarterly Journal, Vol. 26, No. 3, pp. 185-211, June 1998 (DeWilde 83; Levy 1)			
D-72	Draft Proposed American National Standard Information Systems-dpANS Fibre Channel Protocol for SCSI, Revision 012 (Wanamaker Ex 4 (CRDS 166230-304))			

Oracle-Huawei-NetApp Ex. 1024, pg. 1998

Exhibit No.	Description	Offered	Objected	Admitted
D-73	Symbios Logic - Software Interface Specification Series 3 SCSI RAID Controller Software Release 02.xx (Engelbrecht Ex 2 (LSI 1421-1658))			
D-74	Symbios Logic – Hardware Functional Specification for the Symbios Logic Series 3 Fibre Channel Disk Array Controller Model 3701 (Engelbrecht Ex 3 (LSI 1659-1733))			
D-75	Symbios Logic – Software Release Specification SYMplicity Storage Manager for Windows NT Release 06.01.21.08 (Engelbrecht Ex 4 (LSI 1734-80))			
D-76	Symbios Logic – Hardware Functional Specification for the Symbios Logic Fibre Channel Interface Board II 81E Card (Engelbrecht Ex 5 (LSI 1781-1800))			
D-77	RAID Manager Design Note (Engelbrecht Ex 6 (LSI 1801-07))			
D-78	Symbios Logic – Fibre Channel Software Design Document, Tachyon Specific, by Charles Binford, Ahmad Tawil and Robin Huber (Engelbrecht Ex 7 (LSI 1808-25))			
D-79	Accounts Payable Invoices to Transoft Corporation from LSI (Engelbrecht 10 (LSI 2779-82))			
D-80	Purchase Order and Shipping List to Transoft Corporation (Engelbrecht 11 (LSI 2822-24))			
D-81	News Release- Symbios Logic to Demonstrate Strong Support for Fibre Channel at Fall Comdex (Engelbrecht 12 (LSI 2785-86))			
D-82	OEM Datasheet on the 3701 Controller (Engelbrecht 13 (LSI 1837-38))			
D-83	Adaptec AEC-7312A Product Announcement for Competitive Product to Fibre Channel to SCSI RAID Controller (Engelbrecht 16 (LSI 1839-47))			

Oracle-Huawei-NetApp Ex. 1024, pg. 1999

Exhibit No.	Description	Offered	Objected	Admitted
D-84	Confidential Disclosure Agreement with Hewlett-Packard Dated 5/28/96 (Smith Ex 2 (CRDS 2323))			
D-85	Confidential Disclosure Agreement with Hewlett-Packard Dated 9/24/96 (Smith Ex 3 (CRDS 2313))			
D-86	Letter Dated 5/12/97 from A. Leal to B. Bardach re: Enclosing a Copy of the Executed Original OEM License and Purchase Agreement Between Hewlett-Packard and Crossroads (Smith Ex 4 (CRDS 52581-641))			
D-87	Purchasing and Licensing Agreement Between Hewlett-Packard and Crossroads Dated 9/22/98 (Smith Ex 7 (CRDS 29603-646))			
D-88	Preliminary Product Literature for Infinity Commstor's Fibre Channel to SCSI Protocol Bridge (Smith Ex 11; Quisenberry Ex 31 (SPLO 428-30))			
D-89	Fax Dated 12/19/96 from B. Bardach to T. Rarich re: Purchase Order Information (Smith Ex 16 (CRDS 4460))			
D-90	Power of Attorney Documents Files with PTO for Patent Application 001,799 (Smith Ex 18)			
D-91	SWOT Analysis (Smith Ex 21 (CRDS 39777-782))			
D-92	Letter Dated from J. Boykin to B. Smith re; Purchase Order for Evaluation Units from Crossroads (Smith Ex 24 (CRDS 8556-57))			
D-93	Fax Dated 7/22/96 from L. Petti to B. Smith re: Purchase Order from Data General for FC2S Fibre to Channel SCSI Protocol Bridge Model 11 (Smith Ex 25; Quisenberry Ex 23; Bardach Ex 11 (CRDS 8552-55; 8558))			
D-94	Notes for 9/96 Meeting with Compaq Computer (Smith Ex 27; Bardach 2 (CRDS 13562-563))			
D-95	Handwritten Notes of Brian Smith, February 17, 1997 (CRDS 7347-48)			
D-96	Memo Dated 9/27/96 from B. Bardach to B. Smith re: Compaq 9/17 Meeting Summary (Bardach Ex 4 (CRDS 13559-560))			

Oracle-Huawei-NetApp Ex. 1024, pg. 2000

Exhibit No.	Description	Offered	Objected	Admitted
D-97	Letter Dated 11/27/96 from B. Bardach to B. Weisickle re: Comdex Technology Suite (Bardach Ex 8 (CRDS 4969))			
D-98	CrossPoint 4400 Fibre Channel to SCSI Router Preliminary Datasheet (Bardach Ex 9; Quisenberry Ex 33 (CRDS 25606-607))			
D-99	Email Dated 10/11/96 from G. Hoese to B. Bardach re: FC-SCSI Bridge Meeting (Bardach Ex 10 (CRDS 13631))			
D-100	Fax Dated 12/19/96 from B. Bardach to T. Rarich re: Purchase Order Information (Bardach Ex 14 (CRDS 4460))			
D-101	Letter Dated 1/13/97 from B. Bardach to J. Otis re: Evaluation Units (Bardach Ex 16 (CRDS 8141))			
D-102	Email Dated 2/27/97 from B. Bardach to S. Miyamoto re: Kubota Purchase Order (Bardach Ex 17 (CRDS 5227-31))			
D-103	Confidential Disclosure Agreement Between Hewlett-Packard Network Server and Crossroads (Bardach Ex 18 (CRDS 2315))			
D-104	Confidential Disclosure Agreement Between Hewlett-Packard Optical Communications Division and Crossroads (Bardach Ex 19 (CRDS 2340))			
D-105	Email Dated 2/27/97 from B. Bardach to Steve at Exabyte re: Exabyte Software Compatibility Matrix (Bardach Ex 21 (CRDS 4557-58))			
D-106	Letter Dated 10/16/96 from B. Bardach to J. Kramer re: Developing a Business Relationship with Unisys to Sell its FC-SCSI Bridge Products (Bardach Ex 22 (CRDS 5704))			
D-107	Email Dated 12/30/96 from B. Smith to B. Bardach re Teleconference Today re: Download Utility for NT, Delivery of Muxes (Bardach Ex 23 (CRDS 4970))			
D-108	Email Dated 2/17/97 from B. Bardach to M. Wilding re: Information on CrossPoint 4100 (Bardach Ex 24 (CRDS 13643))			

Oracle-Huawei-NetApp Ex. 1024, pg. 2001

Exhibit No.	Description	Offered	Objected	Admitted
D-109	Letter Dated 2/3/97 from B. Bardach to W. Downer re: Sequent Computer Systems re: Licensing Sequent's 1 to 8 FS-SCSI Technology (Bardach Ex 25 (CRDS 5422-23))			
D-110	Signed Exclusivity Agreement Between Compaq and Crossroads Dated 8/17/98 (LiVolsi Ex 3 (CRDS 1484-94))			
D-111	LUN Management Software Specification, Revision 1.0 (LiVolsi Ex 5; Quisenberry Ex 52 (CRDS 34081-089))			
D-112	Miscellaneous Documents Regarding Comdex (Quisenberry Ex 2 (CRDS 27415-465))			
D-113	CrossPoint 4100 Fibre Channel to SCSI Router Preliminary Datasheet (Quisenberry Ex 3 (CRDS 4933-34))			
D-114	CrossPoint 4400 Fibre to Channel to SCSI Router Preliminary Datasheet; Crossroads Company and Product Overview (Quisenberry Ex 4 (CRDS 25606; 16136))			
D-115	Hewlett-Packard Roseville Site Property Pass (Quisenberry Ex 7 (CRDS 27413-414))			
D-115a	B. Smith email to B. Bardach re: Teleconference Today re: Download Utility for NT, Delivery of Muxes etc. (Quisenberry Ex 8 (CRDS 4970))			
D-116	Ancot Power Point Presentation (Quisenberry Ex 17 CRDS 51783-786))			
D-117	IOS Power Point Presentation (Quisenberry Ex 18 (CRDS 51845; 51960))			
D-118	Ancor Power Point Presentation (Quisenberry Ex 19 (CRDS 51777-782))			
D-119	Storage Concepts Power Point Slides (Quisenberry Ex 20 (CRDS 51689; 51846-848))			
D-120	Ancot Fibre Channel to SCSI Bridge Preliminary Datasheet (Quisenberry Ex 21 (CRDS 22758-767))			
D-121	Nondisclosure Agreement Between Adaptec and Crossroads Dated 10/17/96 (Quisenberry Ex 25 (CRDS 8196))			

Oracle-Huawei-NetApp Ex. 1024, pg. 2002

Exhibit No.	Description	Offered	Objected	Admitted
D-122	Fibre Channel to SCSI Bridge Applications (Quisenberry Ex 32 (CRDS 5723-26))			
D-123	Verrazano Engineering Verification Plan, Version 1.1 (Quisenberry Ex 39 (CRDS 43991-44054))			
D-124	Organizational Presentation on the External Storage Group (Lavan Ex 1 (CNS 182242-255))			
D-125	Bridge Phase II Architecture Presentation (Lavan Ex 2 (CNS 182287-295))			
D-126	Attendees/Action Items from 4/12/96 Meeting at BTC (Lavan Ex 3 (CNS 182241))			
D-127	Brooklyn Hardware Engineering Requirements Documents, Revision 1.4 (Lavan Ex 4 (CNS 178188-211))			
D-128	Brooklyn Single-Ended SCSI RAID Bridge Controller Hardware OEM Manual, Revision 2.1 (Lavan Ex 5 (CNS 177169-191))			
D-129	Brooklyn SCS-SCSI Intelligent External RAID Bridge Definition Phase Exit Documentation (Lavan Ex 6 (CNS 177397-611))			
D-130	Coronado Hardware Engineering Requirements Document, Revision 0.0 (Lavan Ex 7 (CNS 176917-932))			
D-131	ESS/FPG Organization (Lavan Ex 8 (CNS 178639-652))			
D-132	Adaptec MCS ESS Presents: Intelligent External I/O Raid Controllers "Bridge" Strategy (Lavan Ex 9 (CNS 178606-638))			
D-133	AEC-7313 Fibre Channel Daughter Board (for Brooklyn) Engineering Specification, Revision 1.0 (Lavan Ex 10 (CNS 176830-850))			
D-134	Physical Exhibit - First Coronado Prototype (Lavan Ex 11)			
D-135	Physical Exhibit -Rev. B PCB, 10-96 (Lavan Ex 12)			
D-136	Physical Exhibit - Complete Brooklyn Product with a Single-Ended SCSI Motherboard (Lavan Ex 13)			
D-137	Bill of Material (Lavan Ex 14 (CNS 177211-214))			

Oracle-Huawei-NetApp Ex. 1024, pg. 2003

Exhibit No.	Description	Offered	Objected	Admitted
D-138	AEC-4412B, AEC-7412/B. External RAID Controller Hardware OEM Manual, Revision 2.0 (Lavan Ex 15 (CNS 177082-123))			
D-139	Coronado II, AEC-7312A Fibre Channel Daughter (for Brooklyn) Hardware Specification, Revision 1.2 (Lavan Ex 16 (CNS 177192-210))			
D-140	AEC-4412B, AEC7412/3B External RAID Controller Hardware OEM Manual, Revision 3.0 (Lavan Ex 17 (CNS 177124-165))			
D-141	Memo Dated 8/15/97 to AEC-7312A Evaluation Unit Customers re: B001 Release Notes (Lavan Ex 18 (CNS 182878-879))			
D-142	Brooklyn Main Board (AES-0302) MES Schedule (Lavan Ex 19 (CNS 177759-763))			
D-143	News Release – Adaptec Adds Fibre Channel Option to its External RAID Controller Family (Lavan Ex 20 (CNS 182932-934))			
D-144	AEC-4412B/7412B User's Guide (Lavan Ex 21)			
D-145	Memos T. Lavan to J. Walker re: Weekly Status (Lavan Ex 213)			
D-146	Memo B. Morris to M. Gluck, J. Walker, T. Lavan, B. Allison and M. Hardy re: Product Priority List (Lavan Ex 214)			
D-147	Memo D. Matthews to T. Lavan re: LUN Zoning and Extended Copy Key ERDs (Lavan Ex 215)			
D-148	G6322/G7324 External RAID Board Controller-User's Guide (Lavan Ex 216)			
D-149	Data Book- AIC-7895 PCI Bus Master Single Chip SCSI Host Adapter (Davies Ex 1 (CNS 182944-964))			
D-150	Data Book- AIC-1160 Fibre Channel Host Adapter ASIC (Davies Ex 2 (CNS 181800-825))			
D-151	Viking RAID Software (Davies Ex 3 (CNS 180969-181026))			

Oracle-Huawei-NetApp Ex. 1024, pg. 2004

Exhibit No.	Description	Offered	Objected	Admitted
D-152	Header File with Structure Definitions (Davies Ex 4 (CNS 180009-018))			
D-153	C++ SourceCode for the SCSI Command Handler (Davies Ex 5 (CNS 179136-168))			
D-154	Header File Data Structure (Davies Ex 6 (CNS 179997-180008))			
D-155	SCSI Command Handler (Davies Ex 7 (CNS 179676-719))			
D-156	Coronado: Fibre Channel to SCSI Intelligent RAID Controller (Kalwitz Ex 1 (CNS 182804-805))			
D-157	Bill of Material (Kalwitz Ex 2 (CNS 181632-633))			
D-158	Emails Dated 1/13-3/31/97 from P. Colline to Mo re: Status Reports (Kalwitz Ex 3 (CNS 182501-511))			
D-159	Hardware Schematics for the Fibre Channel Daughtercard for Coronado (Kalwitz Ex 4 (CNS 181639-648))			
D-160	Adaptec Schematics re AAC-340 (Kalwitz Ex 14 (CNS 177215-251))			
D-161	Bridge Product Line Review (Manzanares Ex 3 (CNS 177307-336))			
D-162	AEC Bridge Series Products-Adaptec External Controller RAID Products Pre-Release Draft, v.6 (Manzanares Ex 4 (CNS 174632-653))			
D-163	Storage Router Block Diagram Drawn by K. Arroyo (Arroyo Ex 11)			
D-164	Concept 910 Series Real-Time RAID Storage Solutions, Product Brochure (Bock Ex 2 (S 00001-2))			
D-165	Concept 821-SW Real-Time RAID Storage Solutions, Product Brochure (Bock Ex 3 S 00003-4))			
D-166	FibreRAID 907 Real-Time RAID Solution, Product Brochure (Bock Ex 4 (S 00009-10))			
D-167	Article entitled, "Storage Concepts" by Martin Bock (Bock Ex 5 (S 00014))			

Oracle-Huawei-NetApp Ex. 1024, pg. 2005

Exhibit No.	Description	Offered	Objected	Admitted
D-168	FibreRAID 814 Real-Time RAID Solution, Product Brochure (Bock Ex 6 (S 00019-20))			
D-169	Article entitled, "Storage Concepts VideoStar and FibreRAID" by Martin Bock (Bock Ex 7 (S 00021))			
D-170	Article entitled, "SGI Gets a Dose of Fibre from Storage Concepts" by Martin Bock from Silicon Graphics World, Vol. 7, No. 2 (Bock Ex 8 (S 00024-25))			
D-171	Products Shipped Log (Bock Ex 9 (S 00026-29))			
D-172	Concept C814 FCS Disk Array Subsystem SCSI Command Specification (Bock Ex 10 (S 00272-329))			
D-173	Concept C814 FCS Disk Array Subsystem Product Specification (Bock Ex 11 (S 00330-348))			
D-174	Concept C814 FCS Disk Array Subsystem User Guide (Bock Ex 12 (S 00395-509))			
D-175	Concept 910-SW Disk Array Systems Users Guide (Talati Ex 13 (S 00349-394))			
D-176	Concept 910-SW SCSI Command Specification (Talati Ex 14 (S 00118-209))			
D-177	HSx70 System Specification, Steve Sicola, Revision 4 (Pherson Ex 2 (CPQ 1648-1707))			
D-178	Hand-Drawn Document by Michael Barrett at Deposition (Pherson Ex 3)			
D-179	Packet of Documents Containing Diagrams, Schematics, Emails and Product Information (Pherson Ex 4 (CPQ 1292-1806))			
D-180	Email Dated 1/17/97 from G. Dolkas to J. Dunning re: Minutes of 1/13 Phone Conference (Dunning Ex 1 (HP 156-57))			
D-181	Email Dated 1/27/97 from G. Dolkas to J. Dunning re: Minutes of 1/20 Phone Conference Dunning Ex 2 (HP 159-60))			
D-182	Email Dated 2/1/97 from G. Dolkas to J. Dunning re: Minutes of 1/27 Phone Conference (Dunning Ex 3 (HP 161-62))			

Oracle-Huawei-NetApp Ex. 1024, pg. 2006

Exhibit No.	Description	Offered	Objected	Admitted
D-183	Email Dated 3/11/97 from G. Dolkas to J. Dunning re: Minutes of 3/10 Phone Conference (Dunning Ex 4 (HP 177-78))			
D-184	Email Dated 4/7/97 from G. Dolkas to J. Dunning re: Minutes of 3/31/ Phone Conference (Dunning Ex 5 (HP 203-04))			
D-185	Email Dated 4/19/97 from G. Dolkas to J. Dunning re: Minutes of 4/14 Conference (Dunning Ex 6 (HP 215-16))			
D-186	Email Dated 5/5/97 from G. Dolkas to J. Dunning re: Minutes from 4/28 Phone Conference (Dunning Ex 7 (HP 217-18))			
D-187	Email Dated 5/12/97 from G. Dolkas to J. Dunning re: Minutes of 5/5 Phone Conference (Dunning Ex 8 (HP 220-21))			
D-188	Email Dated 5/19/97 from G. Dolkas to J. Dunning re: Minutes from 5/12 Phone Conference (Dunning Ex 9 (HP 223-24))			
D-189	Email Dated 7/28/97 from J. Dunning to G. Dolkas re: A thought About Additional Cost Savings (Dunning Ex 10 (HP 236-38))			
D-190	Email Dated 6/17/97 from J. Dunning to G. Dolkas re: Send us the Code (Dunning Ex 11 (HP 272))			
D-191	Hewlett-Packard Service and User Guide Manual for HP A330A, A3511A, A3511Z Fibre Channel SCSI Multiplexor (Preliminary) (Dunning Ex 12 (CPQ 1000-1144))			
D-192	Hewlett-Packard Service and User Manual for Fibre Channel SCSI Multiplexor (Dunning Ex 13 (HP 335-486))			
D-193	Hewlett-Packard Roseville Site Property Pass for Brian Smith (Dunning Ex 14 (HP 489))			
D-194	Distribution Agreement Between Hewlett-Packard and Crossroads (Dunning Ex 15 (HP 326-33))			
D-195	Hewlett-Packard Preliminary Technical Data Sheet for the HP A3308A, A3511A, A3511AZ Fibre Channel-SCSI Multiplexor (Dunning Ex 16 (HP 492-93))			

Oracle-Huawei-NetApp Ex. 1024, pg. 2007

Exhibit No.	Description	Offered	Objected	Admitted
D-196	Hewlett-Packard Preliminary Technical Data Sheet for the HP A330A, A3511A, A3511AZ Fibre Channel-SCSI Multiplexor (Dunning Ex 17 (HP 490))			
D-197	Background on Fibre Channel SCSI (Dunning Ex 18 (HP 1, 3, 5, 7, 9, 11))			
D-197a	Background on Fibre Channel SCSI (HP 1-12)			
D-198	OEM Price List (August 1999) (Regan Ex 7 (PTI 48416))			
D-199	HPFC-5000 Tachyon User's Manual, First Edition (PTI 172419-839)			
D-200	Fall Comdex: A Storage Overview, 1996 (ANCT 470; ANCT 472)			
D-201	RAID Manager 5 with RDAC 5 for UNIX V.4 - User's Guide (MetaStore) (LSI 1853-2294)			
D-202	Demonstrative: Block Diagram SYMBIOS LOGIC Series 3 Fibre Channel Disk Array Controller, Model 3701 Hardware Functional Specification (LSI 1670)			
D-203	Claim Chart: Detailed Analysis of Invalidity of Claims in View of the 3701 Product			
D-204	Claim Chart: Detailed Analysis of Invalidity of Claims in View of the HSx72 Product			
D-205	Claim Chart: Detailed Analysis of Invalidity of Claims in View of the Coronado Product			
D-206	CV of Gary Stephens			
D-207	CV of Brian Berg (Ex 1 to Berg Report)			
D-208	Expert Witness Experience of Brian Berg (Ex 2 to Berg Report)			
D-209	Public Speaking and Conference Participation of Brian Berg (Ex 3 to Berg Report)			
D-210	Publications of Brian Berg (Ex 4 to Berg Report)			
D-211	U.S. Patent No. 6,041,381 (Hoese) (Ex 7 to Berg Report)			
D-212	CV of Kenneth Flamm (Ex 1 to Flamm Report)			

Oracle-Huawei-NetApp Ex. 1024, pg. 2008

Exhibit No.	Description	Offered	Objected	Admitted
D-213	Pathlight SAN Router and Gateway Sales Analysis (Ex 3 to Flamm Report)			
D-214	VPS Software Activations Analysis (Ex 4 to Flamm Report)			
D-215	VPS Pricing History (Ex 5 to Flamm Report)			
D-216	Conservative Estimate of Pathlight Revenue from VPS Activation (Ex 6 to Flamm Report)			
D-217	Estimated Cost to Pathlight of Rewriting VPS (Ex 7 to Flamm Report)			
D-218	Lost Profits to Pathlight if it Removed Access Control from VPS and Received no Revenues from VPS Sales (Ex 8 to Flamm Report)			
D-219	Procom Technology R2000 Failover RAID User's Guide, December 1996 (PTI 177762-786)			
D-220	"Mylex Offers OEMs and VARs High Performance SCSI-to-SCSI RAID Controller with Active/Active Failover", March 17, 1997 (PTI 177903-905)			
D-221	DAC960SX/DAC960SF SCSI Command Reference Manual, Firmware Version 3.3, 11/21/97 (PTI 177906-178089)			
D-222	"A Shared Disk File System for a Cluster of IRIX Workstations", Matthew T. O'Keefe, University of Minnesota (PTI 178424-460)			
D-223	Mylex Raidfx Manager Version 7.09 User Guide, 1998 (PTI 178714-777)			
D-224	Disk Storage in a Dual Server Cluster, William V. Courtright II, Symbios Logic, August 28, 1996 (PTI 178277-294)			
D-225	"Pathlight SAN Gateway-Value Add Functions" (PTI 178814-815)			
D-226	"Accommodating Huge Data Farms", Robin Purohit, Veritas Software, May 22, 2000 (PTI 173621)			
D-227	LUN Security for SANs White Paper, Hu Yoshida, Hitachi, 1999 (PTI 173718-721)			
D-228	Veritas SANPoint Control (PTI 173722-732)			

Oracle-Huawei-NetApp Ex. 1024, pg. 2009

Exhibit No.	Description	Offered	Objected	Admitted
D-229	Applications in Storage Area Networking, Veritas (PTI 173755-761)			
D-230	LUN Security Considerations for Storage Area Networks, Yoshida, Hitachi, 1999 (Flamm Depo Ex 3 (PTI 173762-766))			
D-231	Procom Technology R2000 Failover RAID User's Guide, Revision 2.0, December 1996 (PTI 174510-525)			
D-232	Veritas Software Extends Online Disk Management for Microsoft Windows Enterprise Environments, May 23, 2000 (PTI 174626-627)			
D-233	SAN Management - A Guide to Managing Multi-vendor Storage Area Networks, Veritas, 2001 (PTI 174730-735)			
D-234	Sharing SCSI Tape Backup Devices in a Fibre Channel SAN Environment, TD Systems Corporation (PTI 275377-383)			
D-235	IBM 7190 SCSI Host to SSA Loop Attachment Model 100 Installation and User's Guide, August 1997 (PTI 175810-870)			
D-236	Mylex Dual Controller Configurations using the Mylex DAC960SX and DAC960SXI Disk Array Controllers, May 4, 1997 (PTI 175942-955)			
D-237	"Dataquest names Mylex World's Number One Non-captive RAID Controller Vendor in new 1998 report", October 13, 1998 (PTI 176082-083)			
D-238	Internet Technology Strategy: Summing Up Storage: Our Quick Guide to an IT megatrend, Salomon Smith Barney, January 24, 2001 (PTI 181037-062)			
D-239	Veritas, High Availability Clustering in a Microsoft Windows Environment (PTI 181509-528)			
D-240	Letter dated May 12, 1998 from Pathlight to IBM re Inquiry # RMSS 0506-01, Fibre Channel to SCSI Bridge, with attachments (PTI 48922-49266)			
D-241	Letter dated July 9, 1998 from Pathlight to IBM re Inquiry # 98RMSS 0710-1, Fibre Channel to SCSI Gateway, with attachments (PTI 50005-087)			

Oracle-Huawei-NetApp Ex. 1024, pg. 2010

Exhibit No.	Description	Offered	Objected	Admitted
D-242	IBM Production Procurement Agreement between IBM and Pathlight Technology, Inc., signed January 14, 1999 (PTI 50088-154)			
D-243	Letter dated April 21, 1998 from IBM to Pathlight re Request for Proposal, Inquiry # RMSS 0506-01, Fibre Channel to SCSI Bridge, with attachments (PTI 82749-769)			
D-244	Emails dated March 15-16, 1999 between Randy Hood and Richard Lamperd, re Results of "road map" discussion (PTI 48213-214)			
D-245	Handwritten notes dated May 17, 1999 (PTI 48202-204)			
D-246	Memorandum dated June 3, 1999 from James H. Watson, Jr. to Randy Hood and Said Rahmani re IBM SAN Router Negotiations Update (PTI 47847-849)			
D-247	Fax transmission dated June 7, 1999 from J.H. Watson, Jr. to Dick Lamperd attaching Pathlight's response to request for information (PTI 48184-186)			
D-248	Pathlight OEM Price List, August 1999 (PTI 48416)			
D-249	Fax transmission dated September 29, 1999 from James H. Watson, Jr. to Randy Hood re information transmittal, with attachments (PTI 47939-950)			
D-250	Email dated September 29, 1999 from James H. Watson, Jr. to Karen Ward and Brandon Wong re Tachyon Enhancement plus... implementation proposal (PTI 47912-913)			
D-251	Handwritten notes dated September 30, 1999 (PTI 47930)			
D-252	Letters dated October 5, 1999 from Randolph Hood to Richard Lamperd re pricing announcement for 2000, 1DualFC(SW)-4DS with VPS quotation, VPS software quotation, Existing SAN Gateway upgrade quotation (PTI 47922-925)			

Oracle-Huawei-NetApp Ex. 1024, pg. 2011

Exhibit No.	Description	Offered	Objected	Admitted
D-253	Email dated October 21, 1999 from Sandie Butler to James H. Watson et al re info request in prep for IBM R&D units to come back for upgrade (PTI 47914-916)			
D-254	Handwritten notes dated October 25, 1999 (PTI 47919)			
D-255	Handwritten notes dated October 8, 1999 (PTI 47926-927)			
D-256	Pathlight OEM Price List dated November 1999 (PTI 48415)			
D-257	Email dated November 10, 1999 from James H. Watson, Jr. to Dick Lamperd re Agenda for our Next Conference Call (PTI 47875-877)			
D-258	Fax transmission dated November 24, 1999 from Randolph Hood to Hank Watson with attached fax message and letter from Randolph Hood to Richard Lamperd re 1DualFC(SW)-4DS with VPS quotation (PTI 47865-867)			
D-259	Invoice number 114087 dated January 14, 2000 from Pathlight to Unisys with attached fax transmission dated June 26, 2000 (PTI 48317-318)			
D-260	Letters dated February 15-16, 2000 from Randolph Hood to Richard Lamperd re shipping schedule and FRU unit upgrade to VPS quotation, data mover quotation, with attached memo dated February 15, 2000 and emails dated August 5, 1999 (PTI 48256-261)			
D-261	Letters dated April 26, 2000 from Randolph Hood to Jan White re Extended distance fibre channel long wave PMC module with 2200A, SCSI LVD module, SAN Gateway & SAN Router SCSI pricing review, VPS client software license (PTI 48243-247)			
D-262	Pathlight OEM Price Lists dated May 2000 (PTI 48411-412)			

Oracle-Huawei-NetApp Ex. 1024, pg. 2012

Exhibit No.	Description	Offered	Objected	Admitted
D-263	Letters dated May 4, 2000 from Randolph Hood to Jan White re Extended distance fibre channel long wave PMC module with 2200A, SAN Gateway & SAN Router SCSI pricing review, SCSI LVD module, VPS client software license (PTI 48239-242)			
D-264	Amendment 3 to the Production procurement agreement no. 4998SJ0008 executed on January 14, 1999 between IBM and Pathlight Technology, Inc. (PTI 48115-116)			
D-265	Letter dated May 25, 2000 to James Watson re Amendment #3 to Attachment 1 to Production Procurement Agreement No. 4998SJ0008 between IBM and Pathlight (PTI 48071-072)			
D-266	Email dated May 31, 2000 from Nathan Dickerman to Hank Watson re Amendment #3 with attached draft (PTI 48095-098)			
D-267	Various Pathlight invoices to Overland Data and IBM (PTI 170600, 170559, 170585, 170572, 170534, 170545, 170277, 170424)			
D-268	TD Systems Omniserve 3 - Fast and Wide SCSI Server: User Guide for All Sharing Models, Rev. 3 (TDS 127-70)			
D-269	Pathlight Monthly Income Statement – FY 2000 – 1st and 2nd Quarters (PTI 169540-542)			
D-270	Pathlight Calendar Year 1999 – Operating Expense Trend Lines Last 10 Months (PTI 57288-290)			
D-271	American National Standard – Small Computer Systems Interface (SCSI); Rev. 17-B dated March 3, 1986 (PTI 166556-563)			
D-272	Storage Networking: Storage vs. Data Sharing-Creating Appropriate SAN Solutions -Hewlett-Packard (Flamm Ex 2; PTI 181250-256)			
D-273	LUN-Level Zoning – White Paper (Flamm Ex 4; PTI 177394-398)			
D-274	McData – A Discussion on Fibre Channel Infrastructure Issues (CRDS 5100-22)			

Oracle-Huawei-NetApp Ex. 1024, pg. 2013

Exhibit No.	Description	Offered	Objected	Admitted
D-275	Mark Levy Letter to Said Rahmani Khezri dated April 10, 2000 with attachments – "The Levy Opinion" (Rahmani Ex 81 (PTI 165433-614))			
D-276	Pathlight's SAN Router Installation and User's Guide - September, 2000 (Prestas Ex 85; Rahmani Ex 89 (PTI 165032-243))			
D-277	Pathlight's Gateway Installation and User's Guide – August, 2000 (Rahmani Ex 88 (PTI 167074-293))			
D-278	Hewlett Packard's TachLite Fibre Channel Mass Storage Interface Controller - User's Manual, Draft Ver. 2.5 (CRDS 6829-7061)			
D-279	SCSI Command Support for SSA/SCSI Bridge – Terrence Kelleher (PTI 11191-307)			
D-280	SPARCstorage Array User's Guide, Rev A (PTI 161230-161945)			
D-281	X3T10 994D - (Draft) Information Technology: SCSI-3 Architecture Model, Rev. 18 (PTI 165977-166049)			
D-282	X3T10 Project 1047D: Information Technology - SCSI-3 Controller Commands (SCC), Rev. 6c (PTI 166400-546)			
D-283	X3T10 995D - (Draft) SCSI-3 Primary Commands, Rev. 11 (Wanamaker Ex 5 (PTI 166050-229))			
D-284	X3T10 Project 996D: Information Technology - SCSI-3 Block Commands (SBC), Rev. 8 (PTI 171411-549)			
D-285	Fibre Channel - Physical and Signaling Interface (FC-PH): X3T11/Project 755D, Rev. 4.3 (PTI 168209-685)			
D-286	Fibre Channel - Physical and Signaling Interface (FC-PH): X3T11/Project 901D, Rev. 7.4 (PTI 167975-168162)			
D-287	X3.269-199X (Draft) - Information Systems - dpANS Fibre Channel Protocol for SCSI, Rev. 012 (PTI 166230-304)			
D-288	X3T11/Project 1162DT: Fibre Channel Private Loop SCSI Direct Attach (FC-PLDA), Rev. 1.8 (Wanamaker Ex 6 (PTI 166305-399))			

Oracle-Huawei-NetApp Ex. 1024, pg. 2014

Exhibit No.	Description	Offered	Objected	Admitted
D-289	Small Computer System Interface (SCSI), X3T9.2 /82-2, Revision 17B, 16 December 1985 (PTI 171715-904)			
D-290	Small Computer System Interface-2 (SCSI-2), X3T9.2 Project 375D, Revision 10L, 7 September 1993 (PTI 171905-172405)			
D-291	SCSI-3 Primary Commands, T10 Project 995D, Revision 11A, 28 March 1997 (PTI 167405-430)			
D-292	*InfoStor*, "Building Better Backup Systems with SANs", Farley, Marc, November 2000, pp. 56-72, (PTI 172406-418)			
D-293	The RAIDbook - A Source Book for Disk Array Technology, 4th Edition (PTI 167299-404)			
D-294	Project T10: SCSI-3 Standards Architecture Roadmap and FC-PH, Rev 4.3: Figure 1 - Document Relationship re SCSI-3 Fibre Channel Protocol (PTI 162110-111)			
D-295	Press Release re Storage Concepts Debuts FibreRAID (PTI 167537-538)			
D-296	Report of the Working Group on Storage I/O for Large Scale Computing; Department of Computer Science Duke University: CS-1996-21 (PTI 173330-347)			
D-297	VBAR Volume Backup and Restore (CRDS 12200-202)			
D-298	Report of the Working Group on Storage I/O for Large Scale Computing, ACM Computing Surveys, Vol. 28, No. 4, pp. 1-15 (CRDS 39993-40007)			
D-299	A Case for Network-Attached Secure Disks, Carnegie Mellon University (CMU-CS-96-142) (CRDS 39974-992)			
D-300	"Climbing Mount Everest" SCO World, Jan. 1995 (CRDS 5363-71)			
D-301	"Alternative Storage Interfaces Outdo SCSI Connectivity"; Computerworld, April 1995 (CRDS 5433-34)			
D-302	"The Future of Storage" (CRDS 24748-752)			

Oracle-Huawei-NetApp Ex. 1024, pg. 2015

Exhibit No.	Description	Offered	Objected	Admitted
D-303	The SPARCstorage Array Architecture - Technical White Paper (PTI 161946-162002)			
D-304	Fibre Channel Technology - Technical Brief (PTI 162003-020)			
D-305	Sun Reseller News, Volume V, Issue 26: Special Edition re SPARCSTORAGE ARRAY THE INDUSTRY'S MOST INNOVATIVE STORAGE SOLUTION (PTI 162021-041)			
D-306	Serial Optical with Fibre Channel Arbitrated Loop (SOC+) ASIC Specification, (Preliminary), Rev. 0.1 (SUN 91-319)			
D-307	Sun Microsystems Computer Company Announces the New SPARCstorage Array Model 102 Storage System (SUN 481-88)			
D-308	Sun Unveils New Highly Integrated RAID Mass Storage System-Includes Fibre Channel Interface (SUN 489-90)			
D-309	Sun SPARCstorage Array Enhancements Increase I/O Performance by 25 Percent (SUN 491-92			
D-310	Sun SPARCstorage Array 214 RSM Increases Storage Capacity and Reliability for Enterprise Environments (SUN 493-95)			
D-311	Sun Microsystems Computer Company Announces the New SPARCstorage Array Model 200 Storage System (SUN 498-507)			
D-312	IBM Packing List for Shipment of NUMA-Q Products to Ford Motor Co. Dated December 12, 1996; Sales Order No. 385310 (IBM 1-3)			
D-313	IBM List of NUMA-Q Products Shipped to Ford Motor Co. Sales Order No. 385310 (IBM 4-7)			
D-314	IBM Packing List for Shipment of NUMA-Q Products to Ford Motor Co. Dated December 12, 1996 Sales Order No. 385312 (IBM 8-10)			
D-315	IBM List of NUMA-Q Products Shipped to Ford Motor Co. Sales Order No. 385312 (IBM 11-15)			
D-316	Fibre Channel Bridge Software V1.0.0 Release Notes (NUMA-Q) (IBM 16-30)			

Oracle-Huawei-NetApp Ex. 1024, pg. 2016

Exhibit No.	Description	Offered	Objected	Admitted
D-317	Sequent Online Documentation, 12/96 (IBM 31-32)			
D-318	Sequent Online Documentation Release Notes, 12/96 (IBM 33-36)			
D-319	FC/SCSI Bridge Hardware Functional Specification, Rev. A00 (IBM 37-162)			
D-320	U.S. Patent No. 3,082,406, entitled, "Decoding Device" (L.D. Stevens) (PTI 173253-257)			
D-321	U.S. Patent No. 4,092,732, entitled, "System for Recovering Data Stored in Failed Memory Unit" (K. Ouchi) (PTI 173258-270)			
D-322	U.S. Patent No. 4,947,367, entitled, "System for Converting Digital Data from Magnetic Tape Format Apparatus and Method for Converting a Sequentially Accessible Magnetic Tape Data Format to Directly Accessible Write-Once Disk Data Format to Worm Optical Disk Format" (Chang et al) (PTI 173271-282)			
D-323	U.S. Patent No. 5,072,378, entitled, "Direct Access Storage Device with Independently Stored Parity" (P. Manka) (PTI 173283-317)			
D-324	U.S. Patent No. 5,465,382, entitled, "System and Method for Mapping Directly Accessible Magnetic DASD Storage to Fixed Block Optical Storage" (Day, III et al) (PTI 173318-329)			
D-325	Fibre Channel to SCSI Bridge Functional Requirements (PTI 21175-180)			
D-326	Source Code Module ialib.c (PTI 116351-356)			
D-327	Source Code Module fctcrit.c (PTI 116357-361)			
D-328	VPS Test Specification, Ver. 1.00 dated October 4, 1999 (PTI 116362-370)			
D-329	Source Code Module fctarg.c (PTI 116387-389)			
D-330	ITL Access Control Design Specification, Ver. 1.10 (PTI 116401-414)			
D-331	ITL Access Control Requirement Specification, Ver. 1.06 (PTI 116419-426)			

Oracle-Huawei-NetApp Ex. 1024, pg. 2017

Exhibit No.	Description	Offered	Objected	Admitted
D-331a	ITL Access Control Requirement Specification, Ver. 1.04 (PTI 116427-433)			
D-332	Lab Notebook #1209 of Gregory Prestas dated February 18, 1998 (PTI 123221-344)			
D-333	Lab Notebook of Gregory Prestas (PTI 88216-245)			
D-334	Pathlight physical exhibit containing software modules relating to VPS (PTI 167575)			
D-335	Demonstrative: HSG Controller Block Diagram – FibreChannel HSx71/2 Controller Architecture (CPQ 1670)			
D-336	Demonstrative: Block Diagram Coronado-Lite FC-SCSI Bridge (AEC-7312) (CNS 178642)			
D-337	Declaration of Vicom Custodian of Records, Horatio Lo			
D-338	Declaration of Western Digital Custodian of Records, Michael Ray			
D-339	Declaration of TD Systems Corporation Custodian of Records, Peter A. Brewster			
D-340	Declaration of Computer Network Technology Inc. Custodian of Records, Bill Collette			
D-341	SYM53C810A PCI-SCSI I/O Processor (PTI 172804-173027) Databook Version 3.0			
D-342	SYM53C825A/825AE PCI-SCSI I/O Processor (PTI 173028-173252) Databook Version 2.0			
D-343	Media Server Interface Specification – Preliminary Draft- Version 0.00			
D-344	Maintenance In Out Change Spec, Version 1.10 (PTI 183559-581)			
D-345	Article Entitled, "Empirical Evidence on the Validity of Litigated Patents" by J. Allison and M. Lemley AIPLA Quarterly Journal, Vol. 26, No. 3, pp. 185-211, June 1998 (DeWilde 83; Levy 1) **Entire Article** (PTI 183582 – 644)			
D-346	Compaq CP4100 (Shiner) OEM Requirement, Revision 0.6 (Bardach Ex 26)			

Oracle-Huawei-NetApp Ex. 1024, pg. 2018

Exhibit No.	Description	Offered	Objected	Admitted
D-347	Draft Development Agreement Between Compaq and Crossroads (Bardach Ex 27)			
D-348	Letter B. Bardach to D. Schmidt re: Exclusivity Agreement (Bardach Ex 28)			
D-349	Emails D. Schmidt to K. Hudson, J. Spencer re: Exclusivity Agreement (Bardach Ex 29)			
D-350	Crossroads Financial Reporting Package, July, 2000 ((Fiscal Q3' 00) CRDS 51873 – 51977 - Alvarez Ex 3)			
D-351	Leads Spreadsheet (Quisenberry Ex 5)			
D-352	Fibre Channel Article (Quisenberry Ex 6)			
D-353	Crossroads Purchase Order Log (Quisenberry Ex 9)			
D-354	Dale Quisenberry Notebook (Quisenberry Ex 16)			

June 5, 2001

Respectfully Submitted,

By _____

David D. Bahler, Esq. (SBN 01513100)
Stephen D. Dellett, Esq. (SBN 05652490)
Michael C. Barrett, Esq. (SBN 24006803)
Mark T. Garrett, Esq. (SBN 24007225)
FULBRIGHT & JAWORSKI, L.L.P.
600 Congress Avenue, Suite 2400
Austin, TX 78701-3248
Telephone: (512) 474-5201
Facsimile: (512) 536-4598

ATTORNEYS FOR DEFENDANT/
COUNTER-PLAINTIFF

Oracle-Huawei-NetApp Ex. 1024, pg. 2019

CERTIFICATE OF SERVICE

I hereby certify that on June 5, 2001, I caused copies of the foregoing **DEFENDANT PATHLIGHT TECHNOLOGY, INC.'S THIRD SUPPLEMENTAL TRIAL EXHIBIT LIST** to be served on all counsel of record, as indicated below:

Alan D Albright, Esq.
John Allcock, Esq.
GRAY CARY WARE
& FREIDENRICH, L.L.P.
1221 South MoPac Expressway, Suite 400
Austin, TX 78746-6875

VIA Hand Delivery

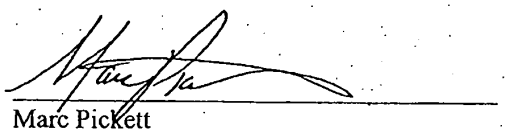

Marc Pickett

25038740.1

IN THE UNITED STATES DISTRICT COURT
FOR THE WESTERN DISTRICT OF TEXAS
AUSTIN DIVISION

CROSSROADS SYSTEMS, (TEXAS), INC., a Texas Corporation, Plaintiff v. CHAPARRAL NETWORK STORAGE, INC. a Delaware corporation, Defendant.	CIVIL ACTION NO. A-00CA-217-SS HONORABLE JUDGE SAM SPARKS DEMAND FOR JURY TRIAL

DEFENDANT CHAPARRAL NETWORK STORAGE, INC.'S
FIRST SUPPLEMENTAL TRIAL EXHIBIT LIST

One or more of the exhibits listed below may be used for cross-examination purposes only. Chaparral reserves the right to supplement its trial exhibit list as necessary.

Exhibit No.	Description	Offered	Objected	Admitted
D-1	Certified Copy of U.S. Patent No. 5,941,972; entitled, "Storage Router and Method for Providing Virtual Local Storage" (Hoese et al)			
D-2	Certified Copy of File History of U.S. Patent No. 5,941,972; entitled, "Storage Router and Method for Providing Virtual Local Storage" (Hoese et al)			
D-3	U.S. Patent No. 5,748,924, entitled, "Method and Apparatus for Transferring Data from SCSI Bus to Serial Device and From Serial Device to SCSI Bus" (Liorens et al)			
D-4	U.S. Patent No. 5,768,623, entitled, "System and Method for Sharing Multiple Storage Arrays by Dedicating Adapters as Primary Controller and Secondary Controller for Arrays Reside in Different Host Computers" (Judd et al) (Hodges Ex 6)			

C.A.S.01

Oracle-Huawei-NetApp Ex. 1024, pg. 2021

Exhibit No.	Description	Offered	Objected	Admitted
D-5	U.S. Patent No. 5,809,328, entitled, "Apparatus for Fibre Channel Transmission having Interface Logic, Buffer Memory, Multiplexor/Control Device, Fibre Channel Controller, Gigabit Link Module, Microprocessor and Bus Control Device" (Nogales et al)			
D-6	U.S. Patent No. 5,812,754, entitled, "Raid System with Fibre Channel Arbitrated Loop" (Lui et al)			
D-7	U.S. Patent No. 5,835,496, entitled, "Method and Apparatus for Data Alignment" (Yeung et al)			
D-8	U.S. Patent No. 5,848,251, entitled, "Secondary Channel for Command Information for Fibre Channel System Interface Bus" (Lomelino et al)			
D-9	Power of Attorney Documents Filed with PTO for Patent Application 001,799 (Smith Ex 18)			
D-10	Inventor Declarations and Power of Attorney Filed with PTO			
D-11	U.S. Patent No. 5,941,972; entitled, "Storage Router and Method for Providing Virtual Local Storage" (Hoese et al) (Hulsey Ex 1)			
D-12	Datasheet for CrossPoint 4100 Fibre Channel to SCSI Router (Dedek Ex 41 (ANCT 117-120))			
D-13	Symbios Logic - Software Interface Specification Series 3 SCSI RAID Controller Software Release 02.xx (Engelbrecht Ex 2 (LSI 1421-1658))			
D-14	Symbios Logic – Hardware Functional Specification for the Symbios Logic Series 3 Fibre Channel Disk Array Controller Model 3701 (Engelbrecht Ex 3 (LSI 1659-1733))			
D-15	Purchase Order and Shipping List to Transoft Corporation (Engelbrecht 11 (LSI 2822-24))			
D-16	News Release- Symbios Logic to Demonstrate Strong Support for Fibre Channel at Fall Comdex (Engelbrecht 12 (LSI 2785-86))			

Oracle-Huawei-NetApp Ex. 1024, pg. 2022

Exhibit No.	Description	Offered	Objected	Admitted
D-17	OEM Datasheet on the 3701 Controller (Engelbrecht 13 (LSI 1837-38))			
D-18	RAID Manager 5 with RDAC 5 for UNIX V.4 - User's Guide (MetaStore) (LSI 1853-2294)			
D-19	Claim Chart: Detailed Analysis of Invalidity of Claims in View of the 3701 Product			
D-19A	Block Diagram SYMBIOS LOGIC Series 3 Fibre Channel Disk Array Controller, Model 3701 Hardware Functional Specification (LSI 1670)			
D-20	Nondisclosure Agreement Between Adaptec and Crossroads Dated 10/17/96 (Quisenberry Ex 25 (CRDS 8196))			
D-21	Organizational Presentation on the External Storage Group (Lavan Ex 1 (CNS 182242-255))			
D-22	Bridge Phase II Architecture Presentation (Lavan Ex 2 (CNS 182287-295))			
D-23	Attendees/Action Items from 4/12/96 Meeting at BTC (Lavan Ex 3 (CNS 182241))			
D-24	Brooklyn Hardware Engineering Requirements Documents, Revision 1.4 (Lavan Ex 4 (CNS 178188-211))			
D-25	Brooklyn Single-Ended SCSI RAID Bridge Controller Hardware OEM Manual, Revision 2.1 (Lavan Ex 5 (CNS 177169-191))			
D-26	Brooklyn SCS-SCSI Intelligent External RAID Bridge Definition Phase Exit Documentation (Lavan Ex 6 (CNS 177397-611))			
D-27	Coronado Hardware Engineering Requirements Document, Revision 0.0 (Lavan Ex 7 (CNS 176917-932))			
D-28	ESS/FPG Organization (Lavan Ex 8 (CNS 178639-652))			
D-29	Adaptec MCS ESS Presents: Intelligent External I/O Raid Controllers "Bridge" Strategy (Lavan Ex 9 (CNS 178606-638))			

Oracle-Huawei-NetApp Ex. 1024, pg. 2023

Exhibit No.	Description	Offered	Objected	Admitted
D-30	AEC-7313 Fibre Channel Daughter Board (for Brooklyn) Engineering Specification, Revision 1.0 (Lavan Ex 10 (CNS 176830-850))			
D-31	Physical Exhibit - First Coronado Prototype (Lavan Ex 11)			
D-32	Physical Exhibit -Rev. B PCB, 10-96 (Lavan Ex 12)			
D-33	Physical Exhibit - Complete Brooklyn Product with a Single-Ended SCSI Motherboard (Lavan Ex 13)			
D-34	Bill of Material (Lavan Ex 14 (CNS 177211-214))			
D-35	AEC-4412B, AEC-7412/B. External RAID Controller Hardware OEM Manual, Revision 2.0 (Lavan Ex 15 (CNS 177082-123))			
D-36	Coronado II, AEC-7312A Fibre Channel Daughter (for Brooklyn) Hardware Specification, Revision 1.2 (Lavan Ex 16 (CNS 177192-210))			
D-37	AEC-4412B, AEC7412/3B External RAID Controller Hardware OEM Manual, Revision 3.0 (Lavan Ex 17 (CNS 177124-165))			
D-38	Memo Dated 8/15/97 to AEC-7312A Evaluation Unit Customers re: B001 Release Notes (Lavan Ex 18 (CNS 182878-879))			
D-39	Brooklyn Main Board (AES-0302) MES Schedule (Lavan Ex 19 (CNS 177759-763))			
D-40	News Release – Adaptec Adds Fibre Channel Option to its External RAID Controller Family (Lavan Ex 20 (CNS 182932-934))			
D-41	AEC-4412B/7412B User's Guide, Rev. A (Lavan Ex 21)			
D-42	Memos T. Lavan to J. Walker re: Weekly Status (Lavan Ex 213)			
D-43	Memo B. Morris to M. Gluck, J. Walker, T. Lavan, B. Allison and M. Hardy re: Product Priority List (Lavan Ex 214)			
D-44	Memo D. Matthews to T. Lavan re: LUN Zoning and Extended Copy Key ERDs (Lavan Ex 215)			
D-45	G6322/G7324 External RAID Board Controller-User's Guide (Lavan Ex 216)			

Oracle-Huawei-NetApp Ex. 1024, pg. 2024

Exhibit No.	Description	Offered	Objected	Admitted
D-46	Data Book- AIC-7895 PCI Bus Master Single Chip SCSI Host Adapter (Davies Ex 1 (CNS 182944-964))			
D-47	Data Book- AIC-1160 Fibre Channel Host Adapter ASIC (Davies Ex 2 (CNS 181800-825))			
D-48	Viking RAID Software (Davies Ex 3 (CNS 180969-181026))			
D-49	Header File with Structure Definitions (Davies Ex 4 (CNS 180009-018))			
D-50	C++ SourceCode for the SCSI Command Handler (Davies Ex 5 (CNS 179136-168))			
D-51	Header File Data Structure (Davies Ex 6 (CNS 179997-180008))			
D-52	SCSI Command Handler (Davies Ex 7 (CNS 179676-719))			
D-53	Coronado: Fibre Channel to SCSI Intelligent RAID Controller Product Brief (Kalwitz Ex 1 (CNS 182804-805))			
D-54	Bill of Material (Kalwitz Ex 2 (CNS 181632-633))			
D-55	Emails Dated 1/13-3/31/97 from P. Colline to Mo re: Status Reports (Kalwitz Ex 3 (CNS 182501-511))			
D-56	Hardware Schematics for the Fibre Channel Daughtercard for Coronado (Kalwitz Ex 4 (CNS 181639-648))			
D-57	Adaptec Schematics re AAC-340 (Kalwitz Ex 14 (CNS 177215-251))			
D-58	Bridge Product Line Review (Manzanares Ex 3 (CNS 177307-336))			
D-59	AEC Bridge Series Products-Adaptec External Controller RAID Products Pre-Release Draft, v.6 (Manzanares Ex 4 (CNS 174632-653))			
D-60	Claim Chart: Detailed Analysis of Invalidity of Claims in View of the Coronado Product			
D-61	Demonstrative: Block Diagram Coronado-Lite FC-SCSI Bridge (AEC-7312) (CNS 178642)			

Oracle-Huawei-NetApp Ex. 1024, pg. 2025

Exhibit No.	Description	Offered	Objected	Admitted
D-62	HSx70 System Specification, Steve Sicola, Revision 4 (Pherson Ex 2 (CPQ 1648-1707))			
D-63	Claim Chart: Detailed Analysis of Invalidity of Claims in View of the HSx72 Product			
D-64	HSG Controller Block Diagram – FibreChannel HSx71/2 Controller Architecture (CPQ 1670)			
D-65	Email Dated 1/17/97 from G. Dolkas to J. Dunning re: Minutes of 1/13 Phone Conference (Dunning Ex 1 (HP 156-57))			
D-66	Email Dated 1/27/97 from G. Dolkas to J. Dunning re: Minutes of 1/20 Phone Conference Dunning Ex 2 (HP 159-60))			
D-67	Email Dated 2/1/97 from G. Dolkas to J. Dunning re: Minutes of 1/27 Phone Conference (Dunning Ex 3 (HP 161-62))			
D-68	Email Dated 3/11/97 from G. Dolkas to J. Dunning re: Minutes of 3/10 Phone Conference (Dunning Ex 4 (HP 177-78))			
D-69	Email Dated 4/7/97 from G. Dolkas to J. Dunning re: Minutes of 3/31/ Phone Conference (Dunning Ex 5 (HP 203-04))			
D-70	Email Dated 4/19/97 from G. Dolkas to J. Dunning re: Minutes of 4/14 Conference (Dunning Ex 6 (HP 215-16))			
D-71	Email Dated 5/5/97 from G. Dolkas to J. Dunning re: Minutes from 4/28 Phone Conference (Dunning Ex 7 (HP 217-18))			
D-72	Email Dated 5/12/97 from G. Dolkas to J. Dunning re: Minutes of 5/5 Phone Conference (Dunning Ex 8 (HP 220-21))			
D-73	Email Dated 5/19/97 from G. Dolkas to J. Dunning re: Minutes from 5/12 Phone Conference (Dunning Ex 9 (HP 223-24))			
D-74	Email Dated 7/28/97 from J. Dunning to G. Dolkas re: A thought About Additional Cost Savings (Dunning Ex 10 (HP 236-38))			
D-75	Email Dated 6/17/97 from J. Dunning to G. Dolkas re: Send us the Code (Dunning Ex 11 (HP 272))			

Oracle-Huawei-NetApp Ex. 1024, pg. 2026

Exhibit No.	Description	Offered	Objected	Admitted
D-76	Hewlett-Packard Service and User Guide Manual for HP A330A, A3511A, A3511Z Fibre Channel SCSI Multiplexor (Preliminary) (Dunning Ex 12 (CPQ 1000-1144))			
D-77	Hewlett-Packard Service and User Manual for Fibre Channel SCSI Multiplexor (Dunning Ex 13 (HP 335-486))			
D-78	Hewlett-Packard Roseville Site Property Pass for Brian Smith (Dunning Ex 14 (HP 489))			
D-79	Distribution Agreement Between Hewlett-Packard and Crossroads (Dunning Ex 15 (HP 326-33))			
D-80	Hewlett-Packard Preliminary Technical Data Sheet for the HP A3308A, A3511A, A3511AZ Fibre Channel-SCSI Multiplexor (Dunning Ex 16 (HP 492-93))			
D-81	Hewlett-Packard Preliminary Technical Data Sheet for the HP A330A, A3511A, A3511AZ Fibre Channel-SCSI Multiplexor (Dunning Ex 17 (HP 490))			
D-82	Background on Fibre Channel SCSI (Dunning Ex 18 (HP 1, 3, 5, 7, 9, 11))			
D-83	Background on Fibre Channel SCSI (HP 1-12)			
D-84	HPFC-5000 Tachyon User's Manual, First Edition (PTI 172419-839)			
D-85	Hewlett Packard's TachLite Fibre Channel Mass Storage Interface Controller - User's Manual, Draft Ver. 2.5 (CRDS 6829-7061)			
D-86	American National Standard – Small Computer Systems Interface (SCSI); Rev. 17-B dated March 3, 1986 (PTI 166556-563)			
D-87	X3T10 994D - (Draft) Information Technology: SCSI-3 Architecture Model, Rev. 18 (PTI 165977-166049)			
D-88	X3T10 Project 1047D: Information Technology - SCSI-3 Controller Commands (SCC), Rev. 6c (PTI 166400-546)			

Exhibit No.	Description	Offered	Objected	Admitted
D-89	X3T10 995D - (Draft) SCSI-3 Primary Commands, Rev. 11 (Wanamaker Ex 5 (PTI 166050-229))			
D-90	Fibre Channel - Physical and Signaling Interface (FC-PH): X3T11/Project 755D, Rev. 4.3 (PTI 168209-685)			
D-91	Fibre Channel - Physical and Signaling Interface (FC-PH): X3T11/Project 901D, Rev. 7.4 (PTI 167975-168162)			
D-92	X3.269-199X (Draft) - Information Systems - dpANS Fibre Channel Protocol for SCSI, Rev. 012 (PTI 166230-304)			
D-93	Small Computer System Interface (SCSI), X3T9.2 /82-2, Revision 1B, 16 December 1985 (PTI 171715-904)			
D-94	Small Computer System Interface-2 (SCSI-2), X3T9.2 Project 375D, Revision 10L, 7 September 1993 (PTI 171905-172405)			
D-95	SCSI-3 Primary Commands, T10 Project 995D, Revision 11A, 28 March 1997 (PTI 167405-430)			
D-96	Project T10: SCSI-3 Standards Architecture Roadmap and FC-PH, Rev 4.3: Figure 1 - Document Relationship re SCSI-3 Fibre Channel Protocol (PTI 162110-111)			
D-97	The RAIDbook - A Source Book for Disk Array Technology, 4th Edition (PTI 167299-404)			
D-98	Report of the Working Group on Storage I/O for Large Scale Computing; Department of Computer Science Duke University: CS-1996-21 (PTI 173330-347)			
D-99	VBAR Volume Backup and Restore (CRDS 12200-202)			
D-100	Report of the Working Group on Storage I/O for Large Scale Computing, ACM Computing Surveys, Vol. 28, No. 4, pp. 1-15 (CRDS 39993-40007)			
D-101	SYM53C810A PCI-SCSI I/O Processor (PTI 172840-173027) Databook Version 2.0			

Exhibit No.	Description	Offered	Objected	Admitted
D-102	SYM53C825A/825AE PCI-SCSI I/O Processor (PTI 173028-173252) Databook Version 3.0			
D-103	U.S. Patent No. 6,260,120 B1 entitled, "Storage Mapping and Partitioning Among Multiple Host Processors in the Presence of Login State Changes and Host Controller Replacement" ((Blumeneau et al) CNS 186019-084)			
D-104	U.S. Patent No. 6,219,771 B1 entitled, "Data Storage Apparatus with Improved Security Process and Partition Allocation Functions" ((Kikuchi et al) CNS 186085-095)			
D-105	European Patent No. EP 0827059A2 entitled, "Disk Apparatus" ((Kikuchi et al) CNS 186096-107)			
D-106	Japanese Patent No. 8-230895. Foreign Application Priority Document to U.S. Patent No.6,219,771 B1 ((Kikuchi et al) CNS 186108-115)			
D-107	U.S. Patent No. 6,145,006 entitled, "Method and Apparatus for Coordinating Locking Operations of Heterogeneous Host Computers Accessing a Storage Subsystem" ((Vishlitsky et al) CNS 186116-126)			
D-108	Hewlett-Packard SSD and Crossroads CP4200 License Agreement (Alvarez Ex 4 (CRDS 2273-90))			
D-109	Hewlett-Packard Royalty Revenue Report (Alvarez Ex 6)			
D-110	Press Release, "Crossroads Announces Expectations for Fiscal Third Quarter" (Root Ex 1)			
D-111	Crossroads SWOT Analysis (Smith Ex 21 (CRDS 39777-782))			
D-112	Crossroads Financial Reporting Package, July, 2000 ((Fiscal Q3' 00) CRDS 51873 – 51977 - Alvarez Ex 3)			
D-113	Chaparral Income Statement Quarter for the Quarter Ended 06/30/01; PDX 278			
D-114	Chaparral Q1 FY '02 Gross Router Revenue; PDX 281			
D-115	Chaparral Income Statement for the Year Ended, 03/31/01; PDX 282			

Exhibit No.	Description	Offered	Objected	Admitted
D-116	Chaparral Q4 '01 Gross Router and Gross RAID Revenue; PDX 284			
D-117	Chaparral LUN Zoning Shipments to Date; PDX 285			
D-118	Chaparral CNSi FC-SCSI Product Shipments w/LUN Zoning; PDX 287			
D-119	Technology Cross-License Agreement Between Adaptec and Chaparral; PDX 298			
D-120	Chaparral Income Statement FY'00; PDX 300			
D-121	Chaparral Income Statement FY'01; PDX 301			
D-122	Chaparral Income Statement FY'02; PDX 302			
D-123	Crossroads Regulatory Label (Sims Ex 9 (CRDS 51996-201; 52036-037))			
D-124	'972 Product Label Listings; Sims Ex 12			
D-125	'972 Regulatory Label; Sims Ex 13			
D-126	Signed Exclusivity Agreement Between Compaq and Crossroads Dated 8/17/98 (LiVolsi Ex 3 (CRDS 1484-94))			
D-127	Catamaran Marketing Requirements Documents, Revision 1.0; LiVolsi Ex 4			
D-128	Storage Router Block Diagram Drawn by K. Arroyo (Arroyo Ex 11)			
D-129	Compaq CP4100 (Shiner) OEM Requirement, Revision 0.6 (Bardach Ex 26)			
D-130	Draft Development Agreement Between Compaq and Crossroads (Bardach Ex 27)			
D-131	Letter B. Bardach to D. Schmidt re: Exclusivity Agreement (Bardach Ex 28)			
D-132	Emails D. Schmidt to K. Hudson, J. Spencer re: Exclusivity Agreement (Bardach Ex 29)			
D-133	LUN Management Map Guide; Bianchi Ex 2			

Oracle-Huawei-NetApp Ex. 1024, pg. 2030

Exhibit No.	Description	Offered	Objected	Admitted
D-134	Catamaran Device Mapping, Ver. 1.2; Bianchi Ex 3			
D-135	Common Definition File for Global Configuration Data Structure ; Bianchi Ex 4			
D-136	Common Source Code for VPD/Device Mapping and Configuration; Bianchi Ex 5			
D-137	Catamaran Device Mapping, Ver. 1.2 (With Hand Written Notations); Bianchi Ex 6			
D-138	Compaq CP 4100 (Shiner) OEM Requirements; Quisenberry Ex 15			
D-139	Catamaran Marketing Requirements Document (MRD); Lutrall Ex 1 ; Quisenberry Ex 51			
D-140	Handwritten Notes of Brian Smith, February 17, 1997 (CRDS 7347-48)			
D-141	Confidential Disclosure Agreement with Hewlett-Packard Dated 9/24/96 (Smith Ex 3 (CRDS 2313))			
D-142	Purchasing and Licensing Agreement Between Hewlett-Packard and Crossroads Dated 9/22/98 (Smith Ex 7 (CRDS 29603-646))			
D-143	Preliminary Product Literature for Infinity Commstor's Fibre Channel to SCSI Protocol Bridge (Smith Ex 11; Quisenberry Ex 31 (SPLO 428-30))			
D-144	Letter Dated from J. Boykin to B. Smith re; Purchase Order for Evaluation Units from Crossroads (Smith Ex 24 (CRDS 8556-57))			
D-145	CrossPoint 4100 Fibre Channel to SCSI Router Preliminary Datasheet (Hulsey Ex 9 (CRDS 16129-130))			
D-146	Compaq and Crossroads FC to SCSI Bridge Discussion (Hoese Ex 11 (CRDS 42459-475))			
D-147	Notes for 9/96 Meeting with Compaq Computer (Smith Ex 27; Bardach Ex 2 (CRDS 13562-563))			
D-148	Compaq and Crossroads FC to SCSI Bridge Discussion (Hulsey Ex 4; Bardach Ex 3; Hoese Ex 11 (CRDS 42459-475))			

Exhibit No.	Description	Offered	Objected	Admitted
D-149	Memo Dated 9/27/96 from B. Bardach to B. Smith re: Compaq 9/17 Meeting Summary (Bardach Ex 4 (CRDS 13559-560))			
D-150	Verrazano FC-SCSI Bridge –Product Overview (Hoese Ex 2; Quisenberry Ex 30; Bardach Ex 5 (CRDS 40807-823))			
D-151	Verrazano Software Development (Hoese Ex 3; Quisenberry Ex 34; Smith Ex 12; Bardach Ex 6 (CRDS 40925-958))			
D-152	Letter Dated 11/27/96 from B. Bardach to B. Weisickle re: Comdex Technology Suite (Bardach Ex 8 (CRDS 4969))			
D-153	CrossPoint 4400 Fibre Channel to SCSI Router Preliminary Datasheet (Bardach Ex 9; Quisenberry Ex 33 (CRDS 25606-607))			
D-154	Email Dated 10/11/96 from G. Hoese to B. Bardach re: FC-SCSI Bridge Meeting (Bardach Ex 10 (CRDS 13631))			
D-155	Fax Dated 7/22/96 from L. Petti to B. Smith re: Purchase Order from Data General for FC2S Fibre to Channel SCSI Protocol Bridge Model 11 (Smith Ex 25; Quisenberry Ex 23; Bardach Ex 11 (CRDS 8552-55; 8558))			
D-156	Email Dated 12/20/96 from J. Boykin to B. Smith re: Purchase Order for Betas in February and March (Hoese Ex 16; Quisenberry Ex 24; Bardach Ex 12 (CRDS 13644-650))			
D-157	Infinity Commstor Fibre Channel Demo for Fall Comdex, 1996 (Hoese Ex 15; Bardach Ex 13 (CRDS 27415))			
D-158	Fax Dated 12/19/96 from B. Bardach to T. Rarich re: Purchase Order Information (Bardach Ex 14; Smith Ex 16 (CRDS 4460))			
D-159	McData Fibre Channel Infrastructure Meeting in San Francisco (Hoese Ex 20; Bardach Ex 15 (CRDS 9258-71))			

Exhibit No.	Description	Offered	Objected	Admitted
D-160	Confidential Disclosure Agreement Between Hewlett-Packard Network Server and Crossroads (Bardach Ex 18 (CRDS 2315))			
D-161	Confidential Disclosure Agreement Between Hewlett-Packard Optical Communications Division and Crossroads (Bardach Ex 19 (CRDS 2340))			
D-162	Letter Dated 10/16/96 from B. Bardach to J. Kramer re: Developing a Business Relationship with Unisys to Sell its FC-SCSI Bridge Products (Bardach Ex 22 (CRDS 5704))			
D-163	Email Dated 12/30/96 from B. Smith to B. Bardach re Teleconference Today re: Download Utility for NT, Delivery of Muxes (Bardach Ex 23 (CRDS 4970))			
D-164	Letter Dated 5/12/97 from A. Leal to B. Bardach re: Enclosing a Copy of the Executed Original OEM License and Purchase Agreement Between Hewlett-Packard and Crossroads (Smith Ex 4; Bardach Ex 30 CRDS 52581-641))			
D-165	Miscellaneous Documents Regarding Comdex (Quisenberry Ex 2 (CRDS 27415-465))			
D-166	CrossPoint 4100 Fibre Channel to SCSI Router Preliminary Datasheet (Quisenberry Ex 3 (CRDS 4933-34))			
D-167	CrossPoint 4400 Fibre to Channel to SCSI Router Preliminary Datasheet; Crossroads Company and Product Overview (Quisenberry Ex 4 (CRDS 25606; 16136))			
D-168	Leads Spreadsheet (Quisenberry Ex 5 (CRDS 35203-206))			
D-169	Fibre Channel Article (Quisenberry Ex 6 (CRDS 52429-432)			
D-170	Hewlett-Packard Roseville Site Property Pass (Quisenberry Ex 7 (CRDS 27413-414))			
D-171	B. Smith email to B. Bardach re: Teleconference Today re: Download Utility for NT, Delivery of Muxes etc. (Quisenberry Ex 8 (CRDS 4970))			

Oracle-Huawei-NetApp Ex. 1024, pg. 2033

Exhibit No.	Description	Offered	Objected	Admitted
D-172	Crossroads Purchase Order Log (Quisenberry Ex 9 (CRDS 14061-062))			
D-173	Dale Quisenberry Notebook (Quisenberry Ex 16 (CRDS 25688-724))			
D-174	Verrazano Engineering Verification Plan, Version 1.1 (Quisenberry Ex 39 (CRDS 43991-44054))			
D-175	Not Used			
D-176	Not Used			
D-177	Not Used			
D-178	Not Used			
D-179	Letter David Zinger to KPMG re: Audit Inquiry Letter from Chaparral (PDX 311 (CNS 174031-032))			
D-180	Zinger Draft Opinion for U.S. 5,941,972 (PDX 312 (CNS 1736894-923))			
D-181	Zinger Opinion for U.S. 5,941,972; Copy of U.S. Patent 5,941,972; U.S. Utility Patent Application; The SPARC Storage Array Architecture; Technical White Paper; SPARC Storage Array User's Guide; Announcement Brief; Copy of U.S. Patent No. 5,974,530 (PDX 313 (CNS 173589-893))			
D-182	Not Used			
D-183	Not Used			
D-184	Not Used			
D-185	Not Used			
D-186	Not Used			

Oracle-Huawei-NetApp Ex. 1024, pg. 2034

Exhibit No.	Description	Offered	Objected	Admitted
D-187	Not Used			
D-188	LUN Zoning for the FS2620 Router, User's Guide (PDX 333)			
D-189	Not Used			
D-190	Listing of Files (PDX 336 (CNS 187025))			
D-191	Chaparral A8526 Testing (PDX 338 (CNS 187123-219))			
D-192	07/31/01 Engineering Change Notice re G8526 – ECN No. 12-0143-001; CNS 188463-464			
D-193	07/31/01 Engineering Change Notice re FS1220 – ECN No. 12-0141-001; CNS 188465-466			
D-194	07/31/01 Engineering Change Notice re FS2620 – ECN No. 12-0142-001; CNS 188467-469			
D-195	Excerpts of Computer Source Code File Name "Passthru.C" Dated December 7, 1999 (CNS 186162-164)			
D-196	Excerpts of Computer Source Code File Name "Zone.C" Dated October 24, 2000 (CNS 186165-169)			
D-197	Chaparral Skyway Product Software Design Document (CNS 186127-144)			
D-198	Chaparral K5412/K7413 Raid User's Guide (CNS 185600-767)			
D-199	Document Entitled, "Board of Directors" Includes Financial Statements (PDX 27 (CNS 040843-864))			
D-200	NA OEM Monthly Business Review (PDX 35 (CNS 041210-244))			
D-201	Brian Allison's 1999 Third Quarter Sales Plan (PDX 38 (CNS 022120-132))			
D-202	Email B. Selinger to J. Walker re: Overpass Status (PDX 47 (CNS 039583-584))			

Oracle-Huawei-NetApp Ex. 1024, pg. 2035

Exhibit No.	Description	Offered	Objected	Admitted
D-203	Email M. Gluck to D. Trachy re: Patents (PDX 48 (CNS 041062))			
D-204	Email N. Squibb to M. Gluck re: Crossroads Patent Infringement (PDX 49 (CNS 00305-306))			
D-205	Crossroad Systems' Original Complaint (PDX 55)			
D-206	Chaparral Business Plan Copy # 50 (PDX 63 (CNS 029850-871))			
D-207	CAPI 3.0 Upgrade Functional Specification (PDX 82 (CNS 035099-117))			
D-208	CAPI Sample Application User Guide (PDX 83 (CNS 035079-081))			
D-209	CAPI-Diagram (PDX 84 (CNS 035118))			
D-210	CAPI Functional Specification-Version 3.0 (Router Errata), Configuration Application Programming Interface for Chaparral External RAID Controllers and Routers, Document Revision: 1-Preliminary (PDX 85 (CNS 042932-945))			
D-211	Advanced LUN Mapping and Host Inclusion/Exclusion Discussion (PDX 86 (CNS 045183-184))			
D-212	Advanced LUN Mapping and Host Inclusion/Exclusion Discussion, CH. 5, Preliminary (PDX 87 (CNS 087319-324))			
D-213	File Entitled, "LUN Masking/ Mapping/Zoning (PDX 91 (CNS 032839-940))			
D-214	Dell Computer, Chaparral Network Storage Fibre Channel/SCSI Routers (PDX 103 (CNS 0550-617))			
D-215	IBM Tucson, Chaparral Network Storage Fibre Channel/SCSI Routers (PDX 111 (CNS 045915-945))			
D-216	Presentation by Chaparral to EMC², Chaparral Fibre Channel-to-SCSI Routers (PDX 112 (CNS 033582-609))			
D-217	CAPI 3.0 Upgrade Functional Specification (PDX 113 (CNS 044635-654))			

Oracle-Huawei-NetApp Ex. 1024, pg. 2036

Exhibit No.	Description	Offered	Objected	Admitted
D-218	Presentation to StorageTek (PDX 117 (CNS 0444-469))			
D-219	Letter D. Zinger to KPMG RE: Audit Inquiry Letter from Chaparral (PDX 131 (CNS 174031-032))			
D-220	Configuration Application Programming Interface for Chaparral External RAID Controllers and Routers, Document Revision: R1 (PDX 135 (CNS 035082-095))			
D-221	CAPI Functional Specification, v2.8 (PDX 153 (CNS 175767-940))			
D-222	CAPI Functional Specification, v3.0 (PDX 154 (CNS 162205.782-162205.964))			
D-223	CAPI Functional Specification, v3.1 (PDX 155 (CNS 175554-765))			
D-224	Document Entitled, "capi3_chg-detail.txt" (PDX 156)			
D-225	Document Entitled, "capi2_chg_detail.txt (PDX 157)			
D-226	Document Entitled, "capi_chg_detail.txt (PDX 158)			
D-227	Screen Shots: Capi2pak.c, Capi2.h, Capicli.c (PDX 161)			
D-228	CAPI Functional Specification, Version 3.1 (PDX 233 (CNS 184737-948))			
D-229	K-Series External RAID Controllers Marketing Matrix (PDX 245 (CNS 185768-769))			
D-230	G-Series External RAID Controllers Marketing Matrix (PDX 247 (CNS 185928-929))			
D-231	Chart of RAID and Router Products (PDX 249)			
D-232	1.1 Pass Through Commands (PDX 274 (CNS 184735-736))			
D-233	CV of Kenneth Flamm (Ex 1 to Flamm Report)			
D-234	Table – Costs of implementing alternatives (iii) or (iv) divided by Chaparral's annualized 2001 sales of accused products (Ex Flamm 4 to Flamm Report)			

Oracle-Huawei-NetApp Ex. 1024, pg. 2037

Exhibit No.	Description	Offered	Objected	Admitted
D-235	Table - Price after LUN zoning was added (Ex Flamm 5 to Flamm Report)			
D-236	Econometric Analysis of Chaparral's sales data (Ex Flamm 6 to Flamm Report)			
D-237	Data Used in Econometric Analysis (CNS 188470-483)			
D-238	Price Comparisons of Bridge/Router/Gateway Routers etc. – Fibre Channel: iBuyer.net (PTI 174711-724)			
D-239	HP SCSI-to-Fibre Channel Bridges (PTI 173700)			
D-240	HP Sure Store – Magneto-Optical Storage Brochure			
D-241	Article – "HP Responds to Squeak!" (08/17/01)			
D-242	Crossroads Webpages			
D-243	Price Comparisons of Bridge/Router/Gateway Routers etc. – Fibre Channel: iBuyer.net (08/17/01)			
D-244	Valuation of a Technology by Rose Ann Dabek (1999)			
D-245	A Survey of Licensed Royalties by Stephen A. Degnan and Corwin Horton (6/97)			
D-246	A Survey of PC Technology Royalty Rates by David Guenther and John Wills (12/95)			
D-247	"Bridging the Gap from SCSI to Fibre Channel"; Henry Baltazar (2/1/99)			
D-248	Resume of Gary Stephens			
D-249	Gary Stephens Testing Documentation			
D-250	Resume of Ian Davies			
D-251	Crossroads' Original Complaint			
D-252	Crossroads' First Amended Complaint			

Oracle-Huawei-NetApp Ex. 1024, pg. 2038

Exhibit No.	Description	Offered	Objected	Admitted
D-253	LUN Management Software Specification, Revision 0.0 (Quisenberry Ex 52)			
D-254	Email B. Smith to B. Bardach re: More on the MUX, Priorities and Other (Smith Ex 5; Bardach Ex 20)			
D-255	Memo from Bruce Lambertus to Richard Speyer and Gene Nagle dated 11/10/99 (CNS 24753-754)			
D-256	Amendment to Licensing Agreement by and between Hewlett Packard and Crossroads Systems, Inc. (Regan Ex 3)			
D-257	Crossroads SWOT Analysis (Spalding Ex 3)			
D-258	Crossroads Competitive Matrix (Painter Ex 3)			
D-259	08/29/01 Engineering Change Notice re G7324 L412 – ECN No. 12-0156-001; CNS 188484-490			
D-260	08/29/01 Engineering Change Notice re G8324 L412 – ECN No. 12-0157-001; CNS 188491-494			
D-261	Chaparral Router and RAID Product Overview (CNS 184733-734)			
D-262	Chaparral FS2620 Matrix (CNS 185047-048)			
D-263	A8526 User's Guide (CNS 185195-376)			
D-264	A-Series External RAID Controller Marketing Matrix (CNS 185377-378)			
D-265	G6322/G7324/G8324 User's Guide (CNS 185404-593)			
D-266	G8324 External RAID Controller Marketing Matrix (CNS 185594-595)			
D-267	G-Series External RAID Controllers Marketing Matrix (CNS 185598-599)			
D-268	K-Series External RAID Controller Marketing Matrix (CNS 185768-769)			
D-269	G and K-Series User's Guide (CNS 185770-927)			

Oracle-Huawei-NetApp Ex. 1024, pg. 2039

Exhibit No.	Description	Offered	Objected	Admitted
D-270	G-Series External RAID Controllers Marketing Matrix (CNS 185928-929)			
D-271	Chaparral Invoice Nos. 2582, 2616, 2656 and 2703 (CNS 188551, CNS 188589, CNS 188634 and CNS 188689)			

September 2, 2001

Respectfully Submitted,

By _____

David D. Bahler, Esq. (SBN 01513100)
Stephen D. Dellett, Esq. (SBN 05652490)
Michael C. Barrett, Esq. (SBN 24006803)
Mark T. Garrett, Esq. (SBN 24007225)
FULBRIGHT & JAWORSKI, L.L.P.
600 Congress Avenue, Suite 2400
Austin, TX 78701-3248
Telephone: (512) 474-5201
Facsimile: (512) 536-4598

ATTORNEYS FOR DEFENDANT

Oracle-Huawei-NetApp Ex. 1024, pg. 2040

CERTIFICATE OF SERVICE

I hereby certify that on September 2, 2001, I caused copies of the foregoing **DEFENDANT CHAPARRAL NETWORK STORAGE, INC.'S FIRST SUPPLEMENTAL TRIAL EXHIBIT LIST** to be served on all counsel of record, as indicated below:

Alan D Albright, Esq.
John Allcock, Esq.
GRAY CARY WARE
& FREIDENRICH, L.L.P.
1221 South MoPac Expressway, Suite 400
Austin, TX 78746-6875

VIA E-MAIL and Hand Delivery on 9/3/01

Marc Pickett

25069163.1

Oracle-Huawei-NetApp Ex. 1024, pg. 2041

Re-exam

IN THE UNITED STATES PATENT AND TRADEMARK OFFICE		
CERTIFICATE OF SERVICE UNDER 37 C.F.R. 1.248		Atty. Docket No. **CROSS1120-14**
Applicant **Geoffrey B. Hoese, et al.**		
Reexamination Control No. **90/007,123**	Date Filed **07/19/2004**	
Title **Storage Router and Method for Providing Virtual Local Storage**		
Group Art Unit **2182**	Examiner **Fleming, Fritz**	
Confirmation Number: **2293**		

I hereby certify that the attached Notification Under 37 C.F.R. 1.565 ("Notification") is being deposited with the U.S. Postal Service as First Class Mail to the Director of the U.S. Patent Office, P.O. Box 1450, Alexandria, VA 22313 on July 29, 2005. Applicant hereby states a copy of the Notification is also being served, via first class mail, on:

Larry E. Severin
Wang, Hartmann & Gibbs, PC
1301 Dove Street, #1050
Newport Beach, CA 92660

As per 35 U.S.C. §1.248 service is made via first class mail on **July 29, 2005**

Respectfully submitted,

Sprinkle IP Law Group

John L. Adair
Reg. No. 48,828

Dated: 07/29/05

1301 W. 25th Street, Suite 408
Austin, Texas 78705
Tel. (512) 637-9223
Fax. (512) 371-9088

Enclosures

IN THE UNITED STATES PATENT AND TRADEMARK OFFICE	
NOTIFICATION UNDER 37 C.F.R. 1.565	Atty. Docket No. **CROSS1120-14**

Applicant **Geoffrey B. Hoese, et al.**	
Application Number **90/007,123**	Date Filed **07/19/2004**
Title **Storage Router and Method for Providing Virtual Local Storage**	
Group Art Unit **7590**	Examiner **Fleming, Fritz**
Confirmation Number: **2298**	

71338 U.S.PTO
08/02/05

Commissioner for Patents
P.O. Box 1450
Alexandria, VA 22313-1450

Certificate of Mailing Under 37 C.F.R. §1.8

I hereby certify that this correspondence is being deposited with the United States Postal Service as First Class Mail in an envelope addressed to Commissioner for Patents, P.O. Box 1450, Alexandria, VA 22312-1450 on **July 29, 2005**.

Janice Pampell
Janice Pampell

Dear Sir:

This notification is filed for the sole purpose to inform the Examiner of status of concurrent litigation involving United States Patent No. 5,941,972 (the "'972 Patent") and United States Patent No. 6,425,035 (the "'035 Patent").

ONGOING LITIGATION

Attached hereto as Exhibit A is a July 26, 2005 Order from the United States District Court for Western District of Texas in the stayed litigation *Crossroads v. Dot Hill Systems Corporation*, Western District of Texas, Civil Action No. A-03-CA-754-SS.

This Submission was served via First Class Mail on July 28, 2005 to:

Larry E. Severin
Wang, Hartmann & Gibbs, PC
1301 Dove Street, #1050
Newport Beach, CA 92660

Respectfully submitted,

Sprinkle IP Law Group
Attorneys for Applicant

John L. Adair
Reg. No. 48,828

Date: July 28, 2005
1301 W. 25th Street
Suite 408
Austin, Texas 78705
Tel. (512) 637-9220
Fax. (512) 371-9088

IN THE UNITED STATES PATENT AND TRADEMARK OFFICE		
CERTIFICATE OF SERVICE UNDER 37 C.F.R. 1.248		Atty. Docket No. **CROSS1120-14**
Applicant **Geoffrey B. Hoese, et al.**		
Reexamination Control No. **90/007,123**	Date Filed **07/19/2004**	
Title **Storage Router and Method for Providing Virtual Local Storage**		
Group Art Unit **2182**	Examiner **Fleming, Fritz**	
Confirmation Number: **2293**		

64660 U.S. PTO 07/22/05

Applicant hereby serves the Reply to Office Action Under *Ex Parte* Reexamination Dated 05/24/05 in the above referenced case to:

Larry E. Severin
Wang, Hartmann & Gibbs, PC
1301 Dove Street, #1050
Newport Beach, CA 92660

As per 35 U.S.C. §1.248 service is made via first class mail on **July 22, 2005**

Respectfully submitted,

Sprinkle IP Law Group

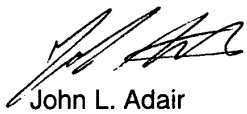

John L. Adair
Reg. No. 48,828

Dated: 07/22/05

1301 W. 25th Street, Suite 408
Austin, Texas 78705
Tel. (512) 637-9223
Fax. (512) 371-9088

Enclosures

IN THE UNITED STATES PATENT AND TRADEMARK OFFICE	
REPLY TO OFFICE ACTION UNDER *EX PARTE* REEXAMINATION DATED 05/24/05	Atty. Docket No. **CROSS1120-14**

Applicants **Geoffrey B. Hoese, et al.**	
Reexamination Control No. **90/007,123**	Date Filed **07/19/2004**
Title **Storage Router and Method for Providing Virtual Local Storage**	
Group Art Unit **2182**	Examiner **Fleming, Fritz**
Confirmation Number: **2293**	Patent No. **5,941,972**

Certificate of Mailing Under 37 C.F.R. §1.10

I hereby certify that this correspondence is being deposited with the United States Postal Service as Express Mail to Addressee *(Label No. EV734539500US)* in an envelope addressed to Commissioner for Patents, P.O. Box 1450, Alexandria, VA 22312-1450 on **July 22, 2005**.

Julie H. Blackard

Julie Blackard

Commissioner for Patents
P.O. Box 1450
Alexandria, VA 22313-1450

Dear Sir:

In response to the Official Action mailed May 24, 2005 (the "May 24 Office Action"), Applicant respectfully requests the Examiner reconsider the rejections of the Claims in the Re-Examination of U.S. Patent 5,941,972 (the "'972 Patent") in view of this reply.

IN THE CLAIMS:

1. A storage router for providing virtual local storage on remote SCSI storage devices to Fibre Channel devices, comprising:

a buffer providing memory work space for the storage router;

a Fibre Channel controller operable to connect to and interface with a Fibre Channel transport medium;

a SCSI controller operable to connect to and interface with a SCSI bus transport medium; and

a supervisor unit coupled to the Fibre Channel controller, the SCSI controller and the buffer, the supervisor unit operable:

to maintain a configuration for SCSI storage devices connected to the SCSI bus transport medium that maps between Fibre Channel devices and SCSI storage devices and that implements access controls for storage space on the SCSI storage devices; and

to process data in the buffer to interface between the Fibre Channel controller and the SCSI controller to allow access from Fibre Channel initiator devices to SCSI storage devices using native low level, block protocol in accordance with the configuration.

2. The storage router of Claim 1, wherein the configuration maintained by the supervisor unit includes an allocation of subsets of storage space to associated Fibre Channel devices, wherein each subset is only accessible by the associated Fibre Channel device.

3. The storage router of Claim 2, wherein the Fibre Channel devices comprise workstations.

4. The storage router of Claim 2, wherein the SCSI storage devices comprise hard disk drives.

5. The storage router of Claim 1, wherein the Fibre Channel controller comprises:

a Fibre Channel (FC) protocol unit operable to connect to the Fibre Channel transport medium;

a first-in-first-out queue coupled to the Fibre Channel protocol unit; and

a direct memory access (DMA) interface coupled to the first-in-first-out queue and to the buffer.

6. The storage router of Claim 1, wherein the SCSI controller comprises:

a SCSI protocol unit operable to connect to the SCSI bus transport medium;

an internal buffer coupled to the SCSI protocol unit; and

a direct memory access (DMA) interface coupled to the internal buffer and to the buffer of the storage router.

7. A storage network, comprising:

a Fibre Channel transport medium;

a SCSI bus transport medium;

a plurality of workstations connected to the Fibre Channel transport medium;

a plurality of SCSI storage devices connected to the SCSI bus transport medium; and

a storage router interfacing between the Fibre Channel transport medium and the SCSI bus transport medium, the storage router providing virtual local storage on the SCSI storage devices to the workstations and operable:

to map between the workstations and the SCSI storage devices;

to implement access controls for storage, space on the SCSI storage devices; and

to allow access from the workstations to the SCSI storage devices using native low level, block protocol in accordance with the mapping and access controls.

8. The storage network of Claim 7, wherein the access controls include an allocation of subsets of storage space to associated workstations, wherein each subset is only accessible by the associated workstation.

9. The storage network of Claim 7, wherein the SCSI storage devices comprise hard disk drives.

10. The storage network of Claim 7, wherein the storage *router* comprises:

a buffer providing memory work space for the storage router;

a Fibre Channel controller operable to connect to and interface with a Fibre Channel transport medium, the Fibre Channel controller further operable to pull outgoing data from the buffer and to place incoming data into the buffer;

a SCSI controller operable to connect to and interface with a SCSI bus transport

medium, the SCSI controller further operable to pull out-going data from the buffer and to place incoming data into the buffer; and

a supervisor unit coupled to the Fibre Channel controller, the SCSI controller and the buffer, the supervisor unit operable:

to maintain a configuration for the SCSI storage devices that maps between Fibre Channel devices and SCSI storage devices and that implements the access controls for storage space on the SCSI storage devices; and

to process data in the buffer to interface between the Fibre Channel controller and the SCSI controller to allow access from workstations to SCSI storage devices in accordance with the configuration.

11. A method for providing virtual local storage on remote SCSI storage devices to Fibre Channel devices, comprising:

interfacing with a Fibre Channel transport medium;

interfacing with a SCSI bus transport medium;

maintaining a configuration for SCSI storage devices connected to the SCSI bus transport medium that maps between Fibre Channel devices and the SCSI storage devices and that implements access controls for storage space on the SCSI storage devices; and

allowing access from Fibre Channel initiator devices to SCSI storage devices using native low level, block protocol in accordance with the configuration.

12. The method of Claim 11, wherein maintaining the configuration includes allocating subsets of storage space to associated Fibre Channel devices, wherein each subset is only accessible by the associated Fibre Channel device.

13. The method of Claim 12, wherein the Fibre Channel devices comprise workstations.

14. The method of Claim 12, wherein the SCSI storage devices comprise hard disk drives.

TABLE OF CONTENTS FOR RESPONSE TO REJECTIONS

I. Rejections Under 35 U.S.C. § 103

A. Introduction

B. Background of the Invention

C. Overview of Claim 1

D. "Remote Storage Devices" and "Allowing Access...Using NLLBPs" - Neither Spring nor Oeda Teaches or Suggests the Limitations of Remote Storage Devices and Allowing Access to the Remote Storage Devices Using NLLBP

1. "Remote" Requires at Least One Serial Transport Medium

2. Spring's SCSI-to-SCSI System Does Not Provide Remote Storage Devices

3. Spring's Ethernet-to-SCSI System Does Not Allow Access using NLLBP

4. Similarly, Oeda Fails to Provide Remote Storage Devices and Allowing Access to the Remote Storage Devices Using NLLBP

5. Summary: Allowing Access to Remote Storage Devices Using NLLBP

E. "Map" – Neither Spring or Oeda Teaches or Suggests Mapping Between Devices Connected to the First Transport Medium and the Storage Devices

1. "Map" - A Representation of the Devices on the First Transport Medium and the Storage Devices

2. Neither Spring nor Oeda Teaches or Suggests a Map

F. "Access Controls" – Neither Spring nor Oeda Teaches or Suggests Implementing Access Controls

1. Implementing Access Controls

2. Spring Does Not Implement Access Controls

3. Oeda Does Not Teach or Suggest Access Controls

4. The Ethernet Based Configuration of Oeda Does Not Teach or Suggest Any Form of Access Controls for Remote Storage

G. The Combination of Oeda and Spring Does Not Teach or Suggest the Present Invention

H. The Cummings Reference Does Not Address the Deficiencies of Spring and Oeda

I. The Jibbe Reference Does Not Address the Deficiencies of Spring and Oeda

J. The Crouse Reference Does Not Address the Deficiencies of Spring and Oeda

K. Summary: There is No *Prima Facie* Case of Obviousness

II. Conclusion

I. Rejections Under 35 U.S.C. §103

A. Introduction

Claims 1-14 of the '972 Patent are variously rejected under 35 U.S.C. §103(a) as being unpatentable over United Kingdom Patent Application Publication No. UK GB 2297636 ("Spring") in view of United States Patent No. (5,634,111) ("Oeda") and further in view of "Systems Architectures Using Fibre Channel," Roger Cummings, Twelfth IEEE Symposium on Mass Storage Systems, Copyright 1993 IEEE ("Cummings") and United States Patent No. 5,394,526 ("Crouse").

In order to establish a prima facie case of obviousness, the Examiner must show: that the prior art references teach or suggest all of the claim limitations; that there is some suggestion or motivation in the references (or within the knowledge of one of ordinary skill in the art) to modify or combine the references; and that there is a reasonable expectation of success. M.P.E.P. 2142, 2143; In re Vaeck, 947 F.2d 488, 20 U.S.P.Q.2d 1438 (Fed. Cir. 1991). As detailed more fully below, Applicants respectfully submit that independent Claim 1, independent Claim 7 and independent Claim 11 of the '972 Patent are not rendered obvious by Spring, Oeda or Jibbe as the references do not teach or suggest all of the claim limitations. More particularly, the references do not teach or suggest, neither individually or in combination: i) providing virtual local storage on remote storage devices and allowing access from devices connected to a first transport medium to the remote storage using native low level block protocols (NLLBP) in conjunction with; ii) mapping between devices connected to the first transport medium and the storage devices; and in conjunction with iii) implementing access controls. None of the prior art, alone or in combination, teaches or suggests all of these claimed elements.

B. Background of the Invention

The '972 Patent is directed to an efficient storage router and method of routing data over a network from devices (e.g., host computers) on one side of the storage router to remote storage devices on the other side of the storage router using low level, block storage protocols or NLLBPs. Even though the storage devices are located remotely over the network from the host computers, the storage devices are virtualized so as to appear to the host computer as locally-attached storage devices. The invention of the '972 Patent further provides the security feature of providing access controls in order to control which storage devices (or portions thereof) any particular host computer can access; this access controls feature is implemented by mapping host devices to the remote storage devices to which a host device has access. By

allowing a host device access only to those virtualized storage devices (or portions of storage devices) to which it is mapped, the invention of the '972 Patent can prevent unauthorized or unintended access by that host device to other remote storage devices in the network. Thus, the present invention provides a networked storage solution that connects hosts to remotely attached storage devices that appear locally attached, provides the security feature of controlling access to the remote storage devices using a map, and allows the host computers to access the remote storage devices over the network at the speeds and efficiencies facilitated by the use of NLLBPs.

As shown in the examples discussed in the Spring and Oeda prior art (discussed more fully below), prior to the present invention, host computers would access storage devices either i) locally via a parallel bus such as a SCSI bus or ii) remotely over a network using network protocols. However, both of these prior art systems had limitations that the invention of the '972 Patent overcomes. For storage systems with locally attached storage devices attached via SCSI buses, a SCSI-to-SCSI routing device provided access between host computers on one side of the SCSI-SCSI routing device to local storage on the other side of the SCSI-SCSI routing device. Because a SCSI bus was used on each side of the SCSI-to-SCSI routing device, a computer could access a storage device using a NLLBP, which facilitates the obtaining of information from the storage device in a fast and efficient manner (i.e., without the overhead associated with typical network file servers). However, a SCSI bus is a complicated set of parallel wires that cannot carry data a very long distance. This limitation is illustrated in Graphic 1 below. Note that color copies of Graphics 1-5 are attached in Exhibit A for the convenience of the Examiner.

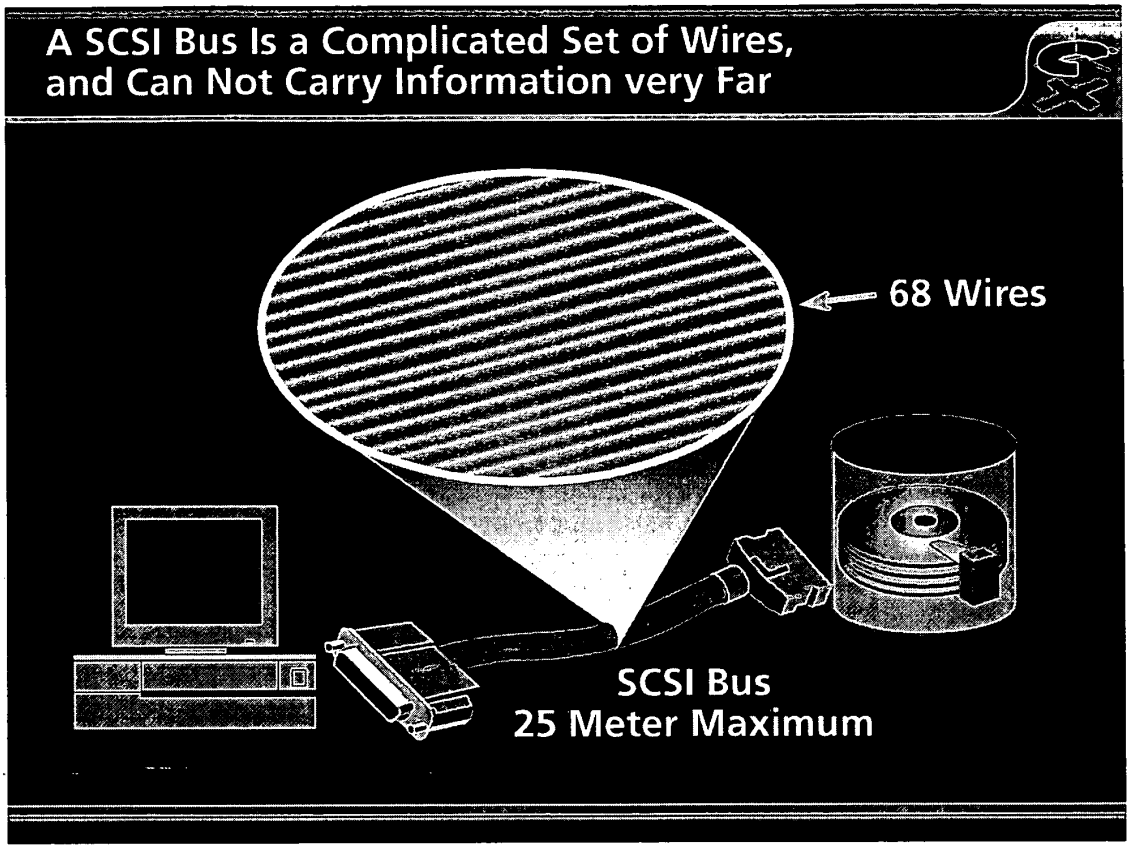

Graphic 1

Thus, a major shortcoming of any such SCSI-to-SCSI routing device or method was that the storage devices must typically be within approximately 25 meters of the host computer that needs to have access to the storage devices. Indeed, due to the costs associated with these complicated SCSI buses, most SCSI buses were significantly shorter (typically less than 12 meters) in actual installations. As the '972 Patent states "typical storage transport mediums provide for a relatively small number of devices to be attached over relatively short distances." *See,* '972 Patent, col. 1, lines 12-14.

Modern computer storage systems, however, need networks connecting multiple computers to each other and to remote storage locations that are significantly distant from the host computers that access the remote storage. As discussed above, this is not possible with a SCSI bus because of the distance limitation of the SCSI bus. In typical prior art systems (including those of Spring and Oeda as will be discussed below), to overcome the inability of a SCSI-to-SCSI system to provide remote storage (as discussed an NLLBP cannot be sent a long distance over a SCSI bus), workstations were connected to a network server using a distance-

capable network transport medium and a network protocol such as Ethernet. *See*, '972 Patent Background, col. 1, lines 38-43. A problem with this prior art solution was that the network server creates a bottleneck which slows down remote access because, at least in part, the computer or workstation needs to create something called a "network protocol" to send the data over the distance-capable transport medium. The problem with this prior art method for transmitting a storage NLLBP over a network to a remote storage device is that it takes the computer time to create a network protocol and it takes the server time to re-construct a native low level block protocol from that network protocol. Thus, the introduction of a network server into the system creates a bottleneck which slows down access to remote storage devices. Graphic 2, shown below, depicts one aspect of that bottleneck with the large balls intended to depict network protocols and the smaller balls intended to depict native low level block protocols. Although Graphic 2 only graphically depicts the problems in one direction (from the host computer through the server to the remote storage devices), the problems exist going both directions. In other words, the same type of bottleneck occurs in reverse when the data returns to the computer from the remote storage device through the server.

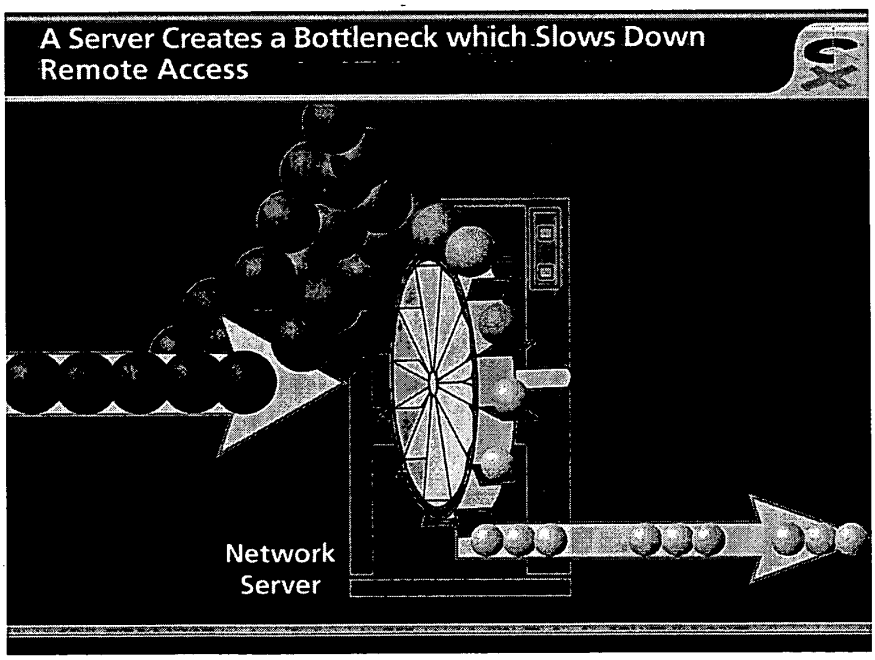

Graphic 2

As shown in Graphic 2, for prior art systems that provided hosts access to remote storage, a workstation first had to translate requests into higher level network protocols in order

to communicate with the network server, and the network server would then translate the requests into low level requests (e.g., NLLBPs) for transmitting to the storage device(s). It takes a computer a long time to create a network protocol. Graphic 3, shown below, describes in general terms steps involved when a computer needs to access remote storage through a server, and has to create a network protocol to achieve that access. Similar steps occur when the computer wants to write data to the remote storage device.

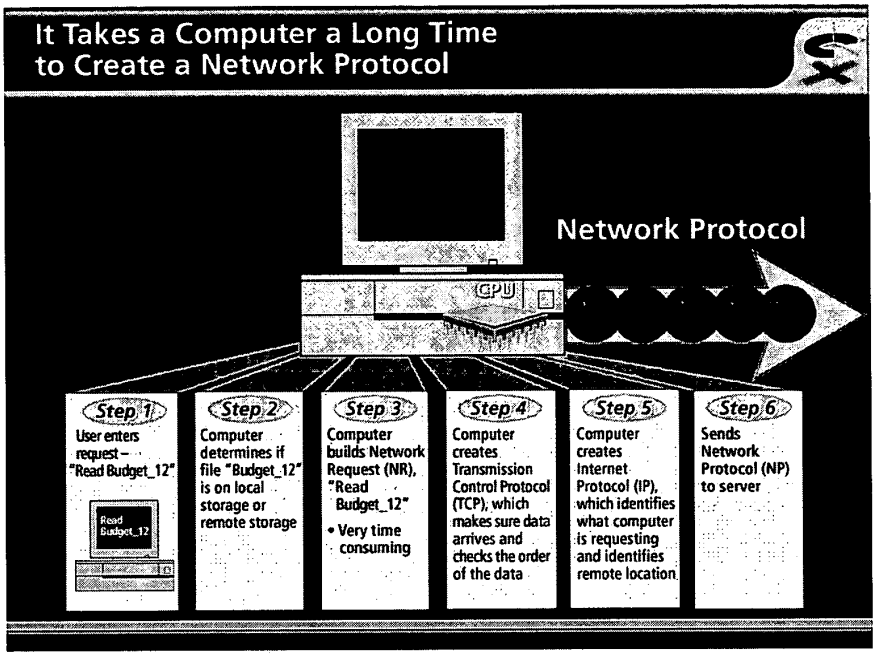

Graphic 3

As illustrated in Graphic 4 below, the process the server goes through to build a NLLBP from a network protocol is also complex and time consuming. Graphic 4 describes in general terms steps involved in building a native low level block protocol from a network protocol. The native low level block protocol is then used to access a local storage device. The return of the data from the remote storage device to the host computer also involves the same complex steps. On the return path, the server needs to build a network protocol from the NLLBP it receives from the storage device. In addition, the computer needs to process that the network protocol to get the information by essentially repeating the steps shown in Graphic 3 above in reverse.

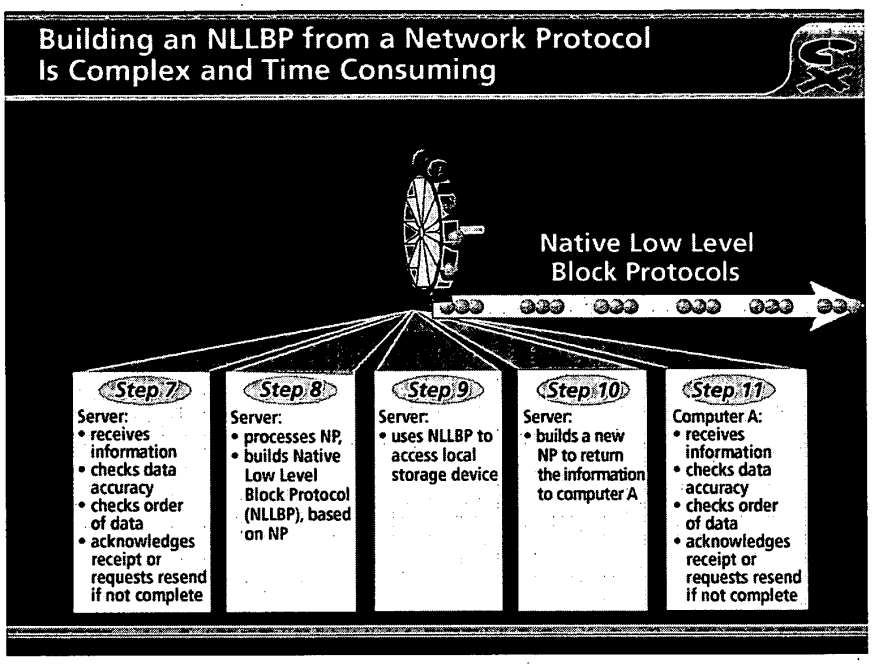

Graphic 4

Thus, prior to the present invention, those wishing to implement centralized storage at a remote location for networked devices were typically forced to use a relatively slow network server solution that required the use of higher level network protocols. These prior art systems did not provide remote storage that could be accessed at the speeds achieved by using an NLLBP from the hosts to the storage devices.

The present invention overcomes the deficiencies of these prior art systems allowing hosts to access remote storage devices at significantly distant, remote locations using a NLLBP. The use of the Fibre Channel protocol, for example, allows storage devices to be located in excess of 10 kilometers away from the workstations using a serial transport medium as opposed to the parallel transport medium of a SCSI bus. However, unlike an Ethernet file server system, a storage router connected using a Fibre Channel transport medium can allow access from the host computer to the remote storage devices using NLLBPs without having to create higher level network protocols. Because Fibre Channel supports the use of NLLBPs, the hosts can access the remote storage devices at greater speeds than can be achieved using higher-level network protocols. The present invention thus routes NLLBPs to the remote storage devices without involving a network server that requires the use of higher-level network protocols. This allows remote storage, but does away with the time consuming and complex steps of creating and processing higher-level network protocols at a server. Consequently,

both distance and speed can be achieved, without sacrificing one for the other as required by prior art solutions.

In addition to providing the ability to locate host computers remotely at significant distances from storage devices, modern storage systems need to provide security between the host computers and the remote storage. In addition, since the host computers are remotely located physically from the storage devices, it is advantageous to provide this security in a centralized manner. In other words, it is desirable to provide a centralized control mechanism that controls each host computer's access so that each host can only access particular remote storage devices (or portions thereof). In prior art systems, the ability to provide such a security mechanism in a networked system connecting hosts to remote storage devices using NLLBPs without simply did not exist.

In addition to providing hosts access to remote storage devices over a network using NLLBPs, the invention of the '972 Patent provides such a security feature. The invention of the '972 Patent contains a map that maps the host computers to the remote storage devices by associating each host computer with some or all of the remote storage devices on the other side of the storage router. The invention of the '972 Patent implements access controls by using the map to allow each host access to only the specific storage to which the host is mapped. In this manner, the invention of the '972 Patent implements access controls to limit each computer's access to a specific subset of storage devices or sections of a storage device on the other side of the storage router. Put another way, the access controls provide the capability to permit or deny each computer access to a particular storage device, a set of storage devices or portions of a single storage device or devices (or any combination thereof). By assigning storage devices or portions thereof to particular computer workstations, the present invention prevents each computer workstations from overwriting or modifying data in storage assigned to another computer workstation. This access controls feature is illustrated below in Graphic 5.

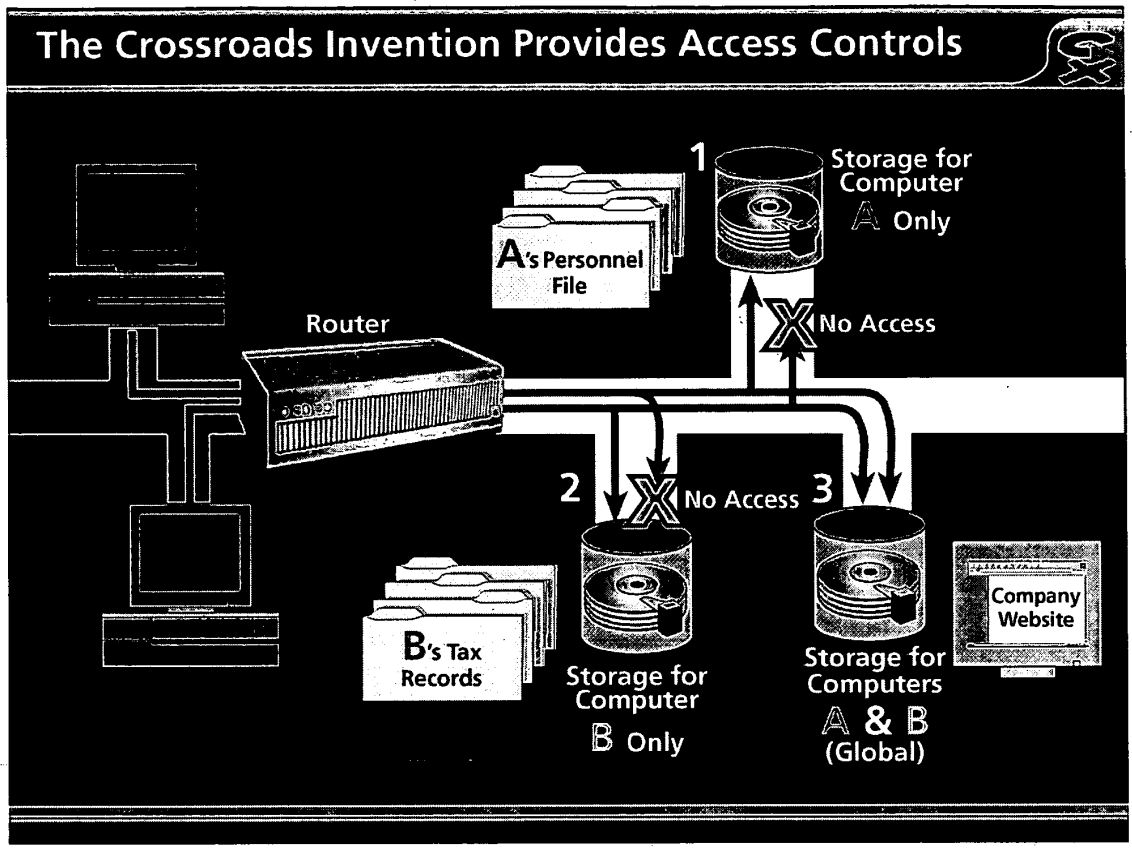

Graphic 5

For the example of Graphic 5, host computer A is mapped to remote storage device 1, host computer B is mapped to remote storage device B and both A and B are mapped to remote storage device 3. Using this map, the invention of the '972 implements access controls by allowing host computer A to access either remote storage device 1 or 3 (e.g., allow host computer A to read or write data to or from storage devices 1 or 3) and by preventing host computer A from accessing remote storage device 2 (e.g., only allowing host computer B to read or write data to storage device 2 in the example of Graphic 5). By mapping between host devices and storage devices (or portions thereof), the invention of the '972 Patent can ensure that requests from host computer A are only directed to the storage devices that are assigned to computer A. This allows the security feature of access controls to be implemented while still allowing the host computers to access the storage devices using an NLLBP.

In summary, the invention of the '972 Patent provides a networked storage solution that combines the ability to allow access from host computers to remote storage devices using

NLLBPs with the ability to control access between host computers and the remote storage devices. Thus, the invention of the '972 Patent provides the advantages of 1) remote storage devices that appear to the host as locally attached, but that actually reside at remote distances from the host computers, 2) access to these remote storage devices at the speed and efficiency associated with using NLLBPs, and 3) data security by controlling the access of each host to the remote storage. None of the prior art cited by the Examiner, alone or in combination, teaches or suggests a system that provides access from host computers (or other device connected to the first transport medium) to remote storage devices using an NLLBP, while implementing access controls in accordance with a map.

C. Overview of Claim 1

The Examiner rejected independent Claim 1 as being unpatentable over Spring in view of Oeda, Jibbe and Cummings and Crouse. Applicants will focus on Claim 1 in discussing how the present invention differs from the cited art.

Claim 1 recites:

> A storage router for providing virtual local storage on remote SCSI storage devices to Fibre Channel devices, comprising:
> a buffer providing memory work space for the storage router;
> a Fibre Channel controller operable to connect to and interface with a Fibre Channel transport medium;
> a SCSI controller operable to connect to and interface with a SCSI bus transport medium; and
> a supervisor unit coupled to the Fibre Channel controller, the SCSI controller and the buffer, the supervisor unit operable:
> to maintain a configuration for SCSI storage devices connected to the SCSI bus transport medium that maps between Fibre Channel devices and SCSI storage devices and that implements access controls for storage space on the SCSI storage devices; and
> to process data in the buffer to interface between the Fibre Channel controller and the SCSI controller to allow access from Fibre Channel initiator devices to SCSI storage devices using native low level, block protocol in accordance with the configuration. [Emphasis Added].

Claim 1 includes "providing virtual local storage on *remote* SCSI storage devices" and "a supervisor unit . . . operable to maintain a configuration that. . . maps between Fibre Channel Devices and the SCSI storage devices and that implements access controls for storage space on the SCSI storage devices and . . . to allow access from Fibre Channel initiator devices to

SCSI storage devices using native low level, block protocol." Claim 11 similarly includes providing virtual local storage on "remote storage devices" while claim 7 is a network containing a router that connects hosts to storage devices through transport mediums. Claims 1, 7 and 11 include features of mapping between Fibre Channel devices (e.g., workstations) and the SCSI storage devices, implementing access controls and allowing access from Fibre Channel initiator devices (e.g., workstations) to the SCSI storage devices using a NLLBP. The present invention as recited in Claim 1 thus enables computers to access remote storage devices without the overhead of high level protocols and file systems typically required by network servers (i.e., using NLLBP) while providing the security measure of access controls.

As will be discussed more fully below, the systems of Spring and Oeda, in contrast to the invention of the '972 Patent, either do not provide remote access to storage devices or, for embodiments of those systems that may be able to provide remote access to storage devices, require the use of higher level network protocols (and therefore cannot allow access to the remote storage devices using NLLBPs). Thus, these references suffer the shortcomings of exactly the type of prior art the present invention was designed to overcome in that they are either limited in distance or require time consuming translations between higher level network protocols and NLLBPs. Moreover, as will also be discussed more fully below, Spring and Oeda fail to disclose mapping and access controls as discussed below.

D. "Remote Storage Devices" and "Allowing Access . . . Using NLLBPs" - Neither Spring nor Oeda Teaches or Suggests the Limitations of Remote Storage Devices and Allowing Access to the Remote Storage Devices Using NLLBP

Examiner Fleming relies on Spring as showing virtual local storage on a remote storage device and both Spring and Oeda as showing the ability to allow access from devices connected to a first transport medium to a remote storage device using NLLBP. Applicants respectfully submit, however, both Spring and Oeda exhibit the shortcomings of the prior art solutions that the present invention specifically overcomes. Namely, the solutions in both Spring and Oeda require a choice between local (not remote) storage that can be accessed using a NLLBP or using slower high level network protocols to access remote storage (can't allow access using NLLBP); neither Spring or Oeda provides a solution that allows access to remote storage devices using NLLBP.

1. "Remote" Requires at Least One Serial Transport Medium

Claim 1, as discussed above, provides virtual local storage on remote storage devices. A "remote storage device" is a storage device that is connected indirectly using at least one serial network transport medium to allow for storage devices to be significantly remote from the host computers. This definition is supported by both the Specification of the '972 Patent and by the claim construction recommended by the Special Master in currently stayed *Crossroads v. Dot Hill Systems Corporation*, Western District of Texas, Civil Action No. A-03-CA-754-SS (the "Dot Hill Litigation").

As described above, prior art solutions that allowed access from hosts to storage devices using a NLLBP used SCSI-to-SCSI routing devices. In this case, both data transport media sere limited distance parallel buses (SCSI is a parallel, distance-limited bus). The present invention overcomes the deficiencies of these prior art systems allowing hosts to access centralized, remote storage devices at "significantly remote positions" using a NLLBP. *See*, '972 Patent, col. 2, lines 18-34. The use of the Fibre Channel protocol (a serial protocol) allows the remote storage devices to be located at distances up to and "even in excess of 10 kilometers" from the workstations. *See*, '972 Patent, col. 2, lines 22-24. The claimed invention of the '972 Patent provides the "ability to centralize local storage for networked workstation without any cost in speed or overhead" so that each workstation can have access to "its virtual local storage as if it were locally connected" despite potentially being at a great distance from the storage devices. *See*, '972 Patent col. 2, lines 18-22. In the invention of the '972 Patent, networked hosts are thus connected to storage devices over at least one significant distance-capable link, such as Fibre Channel.

As the Fibre Channel example just presented, and the other examples provided in the '972 Patent illustrate, the ability to have remote storage devices is achieved through the use of at least one serial transport medium between the workstations and the storage devices. It is the serial interconnect that allows for attachment over large distances and, hence, the ability to provide remote storage. *See*, '972 Patent, col. 1, lines 18-25. Even in the SCSI initiator to SCSI target configuration discussed in the '972 Patent, there is a third Fibre Channel transport medium (i.e., a serial transport medium) between the two storage routers to extend the distance between the workstations and storage devices to provide the capability for having remote

storage. *See,* '972 Patent col. 6, lines 12-24.[1] The serial transport medium is necessary for remote storage because parallel SCSI buses alone are severely limited in distance and cannot provide connectivity to remote storage devices in the manner of the present invention.

The definition of "remote" as requiring at least one serial transport medium is further supported by the fact that in the on-going *Crossroads v. Dot Hill Systems Corporation*, Western District of Texas, Civil Action No. A-03-CA-754-SS litigation (the "Dot Hill Litigation"), Special Master Bayer recommended to the Court that "remote" be construed to mean "indirectly connected through ***at least one serial network transport medium***" (emphasis added). The pertinent portions of the Report and Recommendation of the Special Master Regarding United States Patent Nos., 5,941,972 and 6,425,035 B2 (the "Report") are attached hereto as Exhibit B. Special Master Bayer was commissioned by the Court in the Dot Hill Litigation to conduct a Markman hearing and provide recommendations to the Court as to how the claims of United States Patent No 6,425,035 (the "'035 Patent") should be interpreted. Special Master Bayer filed his recommendations in the Report after reviewing the initial Markman briefs submitted by both Dot Hill and Crossroads, conducting a Markman hearing (on August 30, 2004), and reviewing post-Markman briefs and reply briefs. After careful review and analysis, Special Master Bayer concluded that "remote" meant "indirectly connected through at least one serial network transport medium". Thus, at least one of the transport mediums (either the one connecting workstations to the storage router or the one connecting the storage router to the storage devices) recited in independent Claims 1 and 11 must be serial (e.g., cannot be parallel SCSI). Indeed, in each of these claims one of the transport media is Fibre Channel. This definition of "remote" is consistent with the idea that the invention of the '972 Patent allows for the storage devices to be at "significantly remote positions" of up to and "even in excess of 10 kilometers" from the hosts accessing those storage devices. The at least one serial connection allows for networked workstations to connect to storage remotely, while a parallel SCSI connection simply cannot.

---

[1] In this unclaimed configuration, there are two "back to back" FC-SCSI routers. Workstations are connected to the first router by a SCSI bus and storage devices are connected to the second router by a SCSI bus. The two routers are connected by a Fibre Channel transport medium.

2. Spring's SCSI-to-SCSI System Does Not Provide Remote Storage Devices

The system of Spring does not provide virtual local storage on remote storage devices. Instead, Spring teaches a system in which a server emulates local drives as local SCSI removable drives to a set of workstations. *See,* Spring, page 3, lines 1-5. Workstations access the emulated SCSI removable drives as if they were locally attached removable SCSI drives. *See*, Spring, page 10, lines 1-3. Because the drives appear as removable drives, the SCSI dismount command can be used to free media for use by other workstations. *See*, Spring, page 10, lines 16-25. As an example, in the context of a workgroup that works on large files, such as graphics, this allows one user to mount the virtual drive containing a particular image at the user's workstation, work on the image, save the image, and then dismount the virtual media. Another user can then mount virtual media and edit the media. This obviates the need to share physical media such as CD's or tapes while coordinating operations between various workstations.

The invention of Spring is illustrated in FIGURE 1 of Spring, reproduced below .

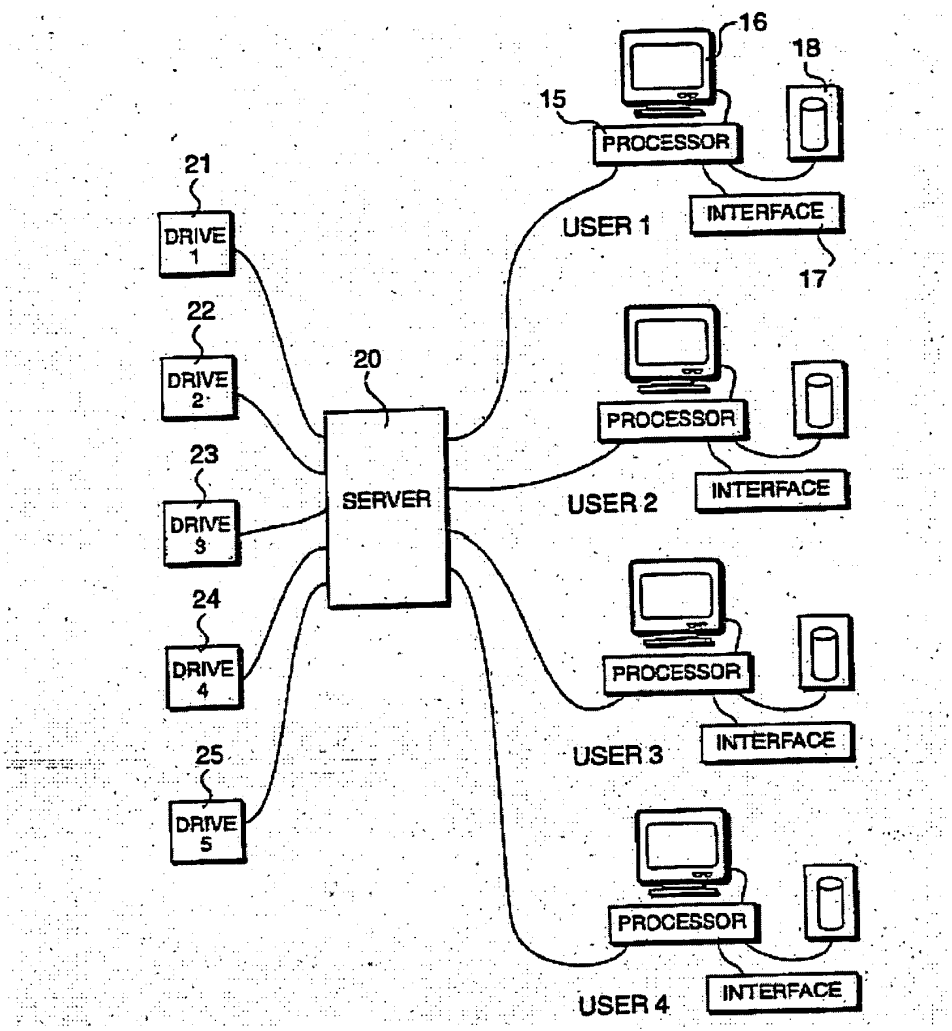

FIGURE 1 of Spring

As shown, the hosts 16 connect via a parallel SCSI bus to server 20 which is further connected to storage devices 21-25. It is clear from the Specification of Spring that the physical drives to which the data is written and from which the data is read are connected using a direct connection, specifically SCSI. Spring repeatedly mentions that the disk drives are implemented in accordance with the RAID 5 configuration. *See e.g.,* Spring, page 6, lines 1-4, and page 10, lines 1-5. In 1995, the year of Spring's filing, RAID 5 systems predominately if not

exclusively used SCSI drives.[2] More significantly, Spring stresses that the differences between the emulated drives and physical drives are that the emulated SCSI drives are smaller than the physical drives and the emulated SCSI drives appear as removable while the physical drives are fixed drives. *See*, Spring, page 8, lines 18-23. Spring does not differentiate the SCSI emulated drives from the physical drives based on protocol and provides no ability to convert between storage protocols. Furthermore, this passage indicates that the physical drives are physically fixed and remain permanently in place. *Id.* Accordingly, Examiner Fleming stated that the system of Spring provides access from the USERS (i.e., host computers) through the server and to the disk drives using SCSI. *See*, May 24 Office Action, page 7 ("SCSI . . . is used from the USER to the storage router to the disc drives").

The Spring SCSI-to-SCSI system, such as that shown in FIGURE 1 of Spring, does not use at least one serial data transport medium and does not provide the capability to locate storage devices at significant distances from the workstations. There is simply no distance-capable storage link in the system of Spring as Spring relies on distance-limited SCSI interfaces. Indeed, Spring recognizes the inability of SCSI interfaces to provide a distance-capable link stating "a large number of workstations may be provided relatively close to server 20, in which case conventional SCSI interfaces may be employed.". *See*, Spring, page 7, lines 10-12 (emphasis added). Thus, the SCSI-to-SCSI system of Spring does not provide virtual local storage on "remote storage devices" as it lacks at least one distance-capable serial transport medium.

3. Spring's Ethernet-to-SCSI System Does Not Allow Access using NLLBP

While the Spring SCSI-to-SCSI system of FIGURE 1 does not provide for remote storage devices and cannot allow for significant physical distance between the hosts and storage devices, Spring does provide some insight as to how "remote" or physically distant storage devices could be incorporated into the Spring system. While acknowledging that parallel SCSI interfaces have "limited" range, Spring states that in order to create less limited distance separation from hosts to storage devices "in alternative embodiments it may be necessary to provide alternative connections, possibly via coaxial cables, so as to increase the distance between the server and the workstations". *See* Spring, page 7, lines 3-7. Spring goes on to state that ". . . in alternative arrangements, workstations may be distributed quite widely

[2] Similar to SCSI, other existing drive connections such as ATA and IDE were severely limited in distance.

through a building, requiring more robust connection between the processor and server 20. It is envisaged that connections of this type should allow the workstation to be displaced from the server by distances in excess of 100 meters, having characteristics similar to high speed Ethernet links." *See Id.* at page 7, lines 12-17. As will be explained more fully below, this alternative embodiment to allow "remote" storage devices in Spring does not meet the claim limitation of "allowing access" between hosts and storage devices "using NLLBPs".

Independent Claim 1 of the '972 Patent not only recites that the storage devices are "remote", but also that the supervisor unit is operable to "allow access from Fibre Channel initiator devices to SCSI storage devices using native low level block protocols." Thus, the host computers connected to the first transport medium must be able to access the remote storage devices using a NLLBP. This ability to allow access from host computers to storage devices using a NLLBP, as recited in Claim 1, requires allowing access between the host and storage device(s) using a protocol (i.e., a set of rules) that does not involve the overhead of high level protocols and file systems typically required by network servers, as supported in the '972 Patent Specification and prior litigation interpreting this claim term.

As discussed above, in systems prior to the present invention, when making a request to storage through a network server to allow access between workstations and remote storage devices, a workstation first had to translate the requests from its file system protocols to higher level network protocols in order to communicate with the network server, and the network server would then translate them into low level requests to the storage device(s). In contrast, as described in the '972 Patent, allowing a host to access storage devices using a NLLBP provides a mechanism by which communication between the host and the storage devices can be accomplished faster because there is no need to translate from a network protocol to a NLLBP. *See* '972 Patent Specification, col. 1, lines 36-50, col. 2, lines 2-5 and 15-18, col. 3, lines 8-19 and col. 4, lines 11-19 (distinguishing an NLLBP from higher-level protocols by contrasting the invention of the '972 Patent (allowing access using NLLBP) to prior art solutions (which allowed access using network protocols requiring translation to NLLBP)). Further, in *Crossroads v. Chaparral Network Storage, Inc.*, Western District of Texas, Civil Action No. A-00-CA-217-SS (the "Chaparral Litigation") and *Crossroads Systems (Texas), Inc., v. Pathlight Technology, Inc.*, Western District of Texas, Civil Action No. A-00CA-248-JN, the Federal District Court issued a Joint Markman Order (the "Markman Order") interpreting "NLLBP" for the purposes of the '972 Patent as follows: "a set of rules or standards that enable computers to exchange information and do not involve the overhead of high level protocols and file systems typically required by network servers." A copy of the Markman Order is attached hereto as

Exhibit C. This construction and the validity of the '972 Patent was upheld by the Federal Circuit. A copy of the Federal Circuit decision affirming the decision of the lower court is attached hereto as Exhibit D. Thus, based on both the Specification of the '972 Patent and the Markman Order, an NLLBP is a protocol that enables the exchange of information without the overhead of high-level protocols and file systems typically required by network servers.

As claimed in the '972 Patent, allowing access from host devices to storage devices is done using NLLBPs. Using the example of a first transport medium of Fibre Channel ("FC") and second transport medium of SCSI, a FC workstation can communicate SCSI commands to a storage device using the FC protocol through the storage router. In this case, the storage router receives the FC-encapsulated SCSI commands on the FC transport medium, removes the FC encapsulation and forwards the SCSI commands to the storage devices on the SCSI data transport medium (provided the FC workstation is allowed to have such access as will be discussed more fully below). There is *no translation* of the commands from a higher level network protocol to a native, low level protocol. In other words, the storage router is not required to translate from a high level command (e.g., a file system command or function call with arguments) into a SCSI command. Rather, the storage router strips the FC layer off of the existing SCSI command and forwards the SCSI command to the storage device. Thus, when the FC host workstation is allowed to have access to the SCSI storage device, that access is accomplished using NLLBPs.

Thus, as recited in Claim 1, to "allow access from Fibre Channel initiator devices SCSI storage devices using native low level block protocol" requires allowing access from host computers to remote storage devices using NLLBP. Thus, due to the "remote" limitation, Claim 1 requires that at least one transport medium be a serial transport medium and due to the "NLLBP" limitation, the host computers must be allowed access to the remote storage devices using a protocol that does not involve the higher level overhead typically associated with network servers. Spring simply does not teach or suggest any system that will allow hosts to access remote storage devices using NLLBP.

As discussed above, Spring does provide an alternative embodiment to its SCSI-to-SCSI embodiment of FIGURE 1 that can allow for hosts to be separated from storage devices by distances in excess of 100 meters. *See,* Spring, page 7, lines 3-17. (". . . in alternative arrangements, workstations may be distributed quite widely through a building, requiring more robust connection between the processor and server 20. It is envisaged that connections of this type should allow the workstation to be displaced from the server by distances in excess of 100 meters, having characteristics similar to high speed Ethernet links"). The use of coaxial

cable for Ethernet networks was common in 1995 (e.g., 10Base-2 and 10Base-5 Ethernet), however, these Ethernet networks required the use of high-level protocols to transmit information between a workstation and a network server. In Ethernet-to-SCSI systems such as that suggested in Spring, a workstation would first translate the request from its file system protocol to a "network protocol" (i.e., Ethernet protocol) and send the request to a network server. The network server would then translate the network protocol to a native low level protocol (i.e., SCSI) and send the low level request to the attached storage device. The problem with this type of system is exactly the problem that the '972 Patent described in the Background of the Invention and was designed to overcome. Namely, this type of system creates a bottleneck that slows down the access from the hosts to the remote storage devices. Because, NLLBPs cannot be sent over long distances using a SCSI bus, the workstation must create a network protocol to send requests over the Ethernet transport medium. It takes the workstation a long time to create a network protocol and takes the server time to translate the information sent according to the network protocol into a NLLBP (and visa versa when sending the information back from the storage device to the host). In such a system, data access times from the workstation to the devices are increased.

While Spring provides no guidance as to how the emulated removable SCSI drives would be accessed via Ethernet in the suggested alternative embodiment, at the time of Spring, one of ordinary skill in the art would have understood that access to remote storage via Ethernet required the use of a higher level network protocol and there no teaching or suggestion in Spring otherwise. Thus, it would be understood that the workstations of Spring use a higher level network protocol (e.g., an Ethernet file server protocol) that is then translated by the network server into a NLLBP before access to remote storage devices can be achieved. The system of Spring is exactly the type of system that the present invention was designed to overcome because the system of Spring **does** involve the overhead of high level protocols typically required by network servers and **does** require a translation of a network protocol into SCSI commands at the network server when allowing workstations to make requests to and from storage devices. Therefore, Spring does not teach or suggest the limitation "to allow access from Fibre Channel initiator devices to [remote] SCSI storage devices using native low level, block protocol" (emphasis added).

4. Similarly, Oeda Fails to Provide Remote Storage Devices and Allowing Access to the Remote Storage Devices Using NLLBP

Like Spring, Oeda discloses a SCSI-to-SCSI system of connecting a host computer to a storage device(s). *See* Oeda, FIGURES 1-5. FIGURE 4, illustrative of the Oeda system, is reproduced below.

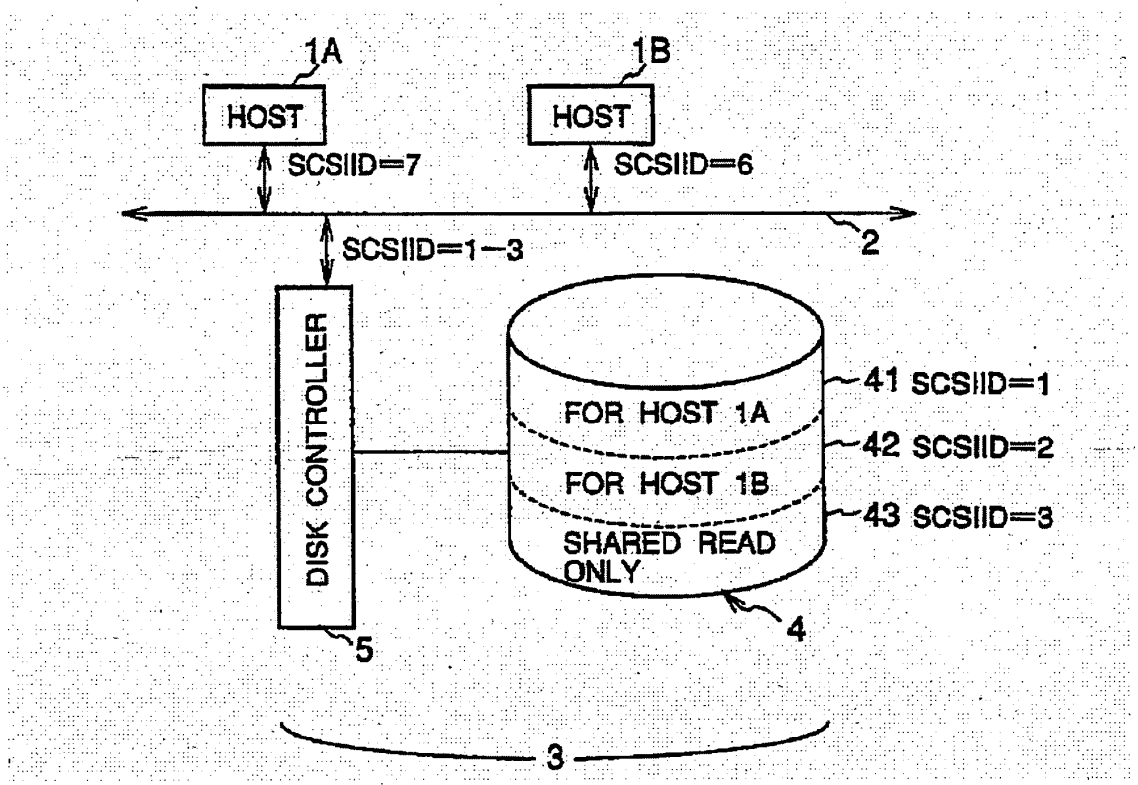

FIGURE 4 of Oeda

Using the Example of FIGURE 4 of Oeda, a SCSI magnetic disk storage device 3 (including disk controller 5 and drive unit 4) is connected to two host computers through SCSI bus 2. Thus, hosts communicate to storage devices in this Oeda system using only parallel SCSI; there is no serial transport medium between the hosts and the disk storage device. Consequently, for the reasons discussed above regarding Spring, the Oeda storage device 3 of FIGURE 4 is not remote from the host computers as recited in the independent Claims of the '972 Patent.

Like Spring, Oeda also provides an alternative embodiment that has the capability to provide hosts access to remote storage as shown in FIGURE 6 of Oeda reproduced below. Like Spring, this Oeda embodiment also fails to allow access to remote storage devices using NLLBP.

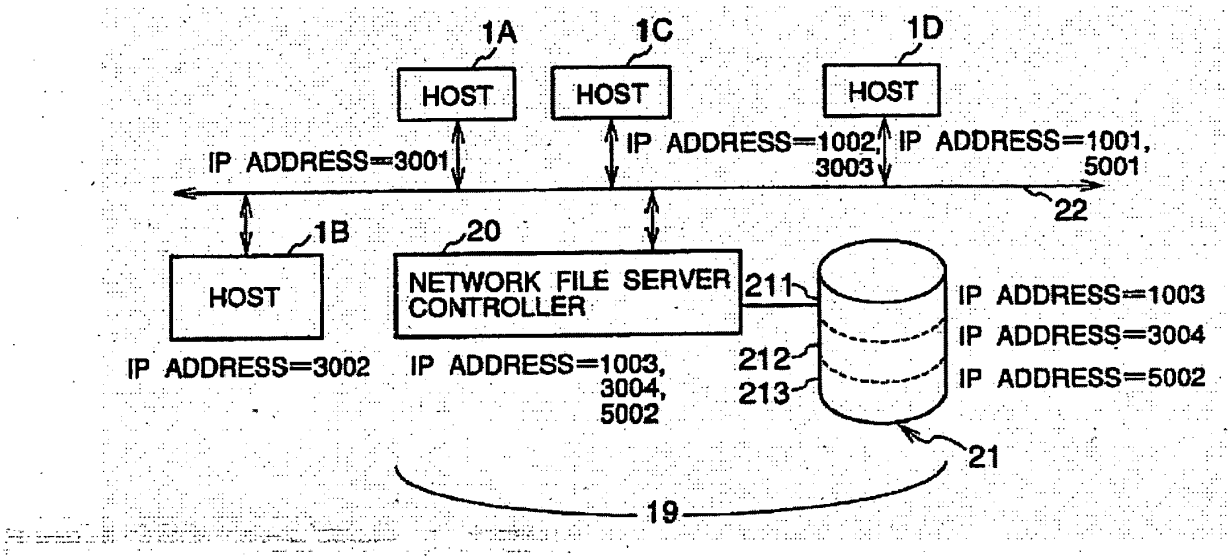

FIGURE 6 of Oeda

In FIGURE 6 of Oeda, Oeda replaces the SCSI bus 2 of FIGURE 4 with an Ethernet connection 22 and inserts into the system a network file server 19. *See,* Oeda, col. 9, lines 48-67 and FIGURE 6. As this embodiment of Oeda points out, access to remote storage devices required the use of higher-level network protocols and is not done using NLLBP. There is no teaching or suggestion in Oeda to the contrary. In fact, Oeda recognizes that a translation from the network protocol to a NLLBP must occur stating "host computer 1B must accept and deliver commands and data in which the differences of communication protocols for the SCSI bus 21 and Ethernet are considered." *See*, Oeda, col. 9, lines 47-60 (describing replacing the SCSI bus of FIGURE 5 with a network such as Ethernet). Further in conjunction with FIGURE 6, Oeda describes that while this embodiment allows the storage device to be shared among hosts using different operating systems and network protocols, it still requires the use of high-level network protocols between the host computers and file server (e.g., the network protocols used by UNIX, MS-DOS and the general purpose computer to communicate via Ethernet). *See*, Oeda, col. 10, lines 22-68.

Again, these Ethernet-based systems of Oeda are precisely the types of systems that the present invention was designed to overcome because they **do** involve the overhead of high level network protocols typically required by network servers and they **do** require a translation of a network protocol into SCSI commands at the network server when allowing workstations to make requests to and from storage devices. Thus, similar to Spring, Oeda simply does not teach or suggest the limitation "to allow access from Fibre Channel initiator devices to [remote] SCSI storage devices using native low level, block protocol" (emphasis added).

5. Summary – Allowing Access to Remote Storage Devices Using NLLBP

Neither Oeda or Spring, alone or in combination, teach or suggest allowing access from host devices to remote storage devices using NLLBPs. Spring teaches a SCSI-to-SCSI system in which workstations are connected to a network server via a SCSI bus. Spring does not disclose in this embodiment any distance capable serial transport medium, but simply the limited distance, parallel SCSI transport medium. Consequently, the SCSI-to-SCSI system of Spring does not allow access to "remote" storage devices as recited in Claims 1 and 11. In order to provide the ability to access remote storage devices, Spring introduces Ethernet connectivity (replacing the SCSI bus between the workstations and the server with an Ethernet connection) and higher-level network protocols. Because this Ethernet-to-SCSI embodiment of Spring requires the use of higher-level network protocols it does not "allow access from Fibre Channel initiator devices the [remote] SCSI storage devices using native low level, block protocol" as recited in Claims 1 and 11.

Similarly, Oeda teaches a SCSI based system and an Ethernet based system that suffer the same deficiencies as the systems of Spring. In the SCSI based system of Oeda, the storage device is also not indirectly connected to the host computer by at least one serial transport medium. Consequently, the magnetic storage device is not "remote" from the host computers. The Ethernet based systems of Oeda require the use of higher-level network protocols and, as in Spring, do not "allow access from Fibre Channel initiator devices the [remote] SCSI storage devices using native low level, block protocol."

Thus, in Spring and Oeda, the storage devices are not remote and access to them from the host is not provided using NLLBPs. Rather, the storage devices are connected using limited distance parallel SCSI buses. In order to provide access to a remote storage device, a higher level network protocol must be introduced. That is, in order to allow the storage devices

to become remote in Spring and Oeda, access is no longer provided from the workstations to the storage devices using a NLLBP.[3] Applicants therefore respectfully submit that Spring and Oeda do not teach or suggest providing "virtual local storage on remote storage devices" and providing access "from a Fibre Channel initiator device to [remote] SCSI storage devices using native low level block protocol" as recited in independent Claim 1. As the cited references, alone or in combination, do not teach or suggest this feature of the present invention, Applicants respectfully request allowance of Claim 1. As will be discussed more fully below, these references certainly do not teach or suggest allowing access to remote storage devices in conjunction with mapping and access controls as claimed in the '972 Patent.

E. "Map" – Neither Spring nor Oeda Teaches or Suggests Mapping Between Devices Connected to the First Transport Medium and the Storage Devices

1. A Map Includes a Representation of the Devices on the First Transport Medium and the Storage Devices

Claim 1 recites a supervisor unit operable "to map between Fibre Channel devices and SCSI storage devices." Claims 7 and 11 contain similar features. Mapping between Fibre Channel devices and storage devices in the present application refers to a mapping between the workstations/host computers and storage devices such that a particular workstation/host computer on the first transport medium is associated with a storage device, storage devices or portion thereof on the second transport medium. As discussed in the '972 Patent Specification, the mapping provides a correlation between devices on the first data transport medium and the storage devices through one or more steps. *See*, '972 Patent, col. 2, lines 1-5, col. 2, lines 13-14, and col. 8, lines 53-65. In addition, the Federal District Court in the Chaparral and Pathlight Litigations defined the term "map" in its Markman Order as follows: "to create a path from a device on one side of the storage router to a device on the other side of the router, i.e., from a Fibre Channel device to a SCSI device (or vice-versa). A map contains a representation of devices on each side of the storage router, so that when a device on one side of the storage router wants to communicate to a device on the other side of the storage router, the storage router can connect the devices." *See,* Markman Order, Exhibit C, page 12 (emphasis added). Thus, the mapping of the '972 Patent associates the host device(s) on the first transport

---

[3] Jibbe, a reference directed to a SCSI interface, simply does not address the issue of remote storage devices or allowing access to these remote storage devices using NLLBPs.

medium with storage devices on the second transport medium to create a path between the host and the remote storage device (or portion thereof). For example, the map can include mapping a host workstation identifier (e.g., address or other identifier) and a virtual representation of a storage device (e.g., a virtual LUN), and potentially even further from the virtual representation of the storage device to a physical representation of the storage device (e.g., a physical LUN).

2. Neither Spring nor Oeda Teaches or Suggests a Map

As an initial matter, Examiner Fleming recognizes that Spring does not map between devices connected to the first transport medium and the storage devices as recited in Claim 1 (and likewise does not point to any place in Jibbe, Cummings or Crouse that teaches or suggests such a mapping). *See,* May 24 Office Action, page 7 (Spring "does not set forth a mapping between the workstations and the storage devices"). Instead, Examiner Fleming attempts to rely on Oeda to show mapping. *See*, May 24 Office Action, page 7 ("a mapping between workstations (in the form of HOSTs) and the assigned partitions (41-43) is clearly shown"). Oeda, however, does not teach mapping as recited in the '972 Patent because there is no "map" that contains a representation of a device on one side of the storage router and a representation of a storage device on the other side of the storage router so as to create a path to connect the device to the storage device (e.g., to connect the fibre channel host device to a SCSI storage device).

There is no map in Oeda that includes a representation of devices on one side of the disk controller and storage devices on the other side. Such a map is not necessary or used in Oeda, at least in part, because the Hosts are responsible for knowing which target SCSI IDs they can request and the disk controller processes target SCSI IDs without regard to the host that asserts the ID. Oeda discloses a host-based methodology to associate hosts with a storage partition and does not disclose a **map** between **devices** connected to the first transport medium and the storage devices (i.e., a map between Fibre Channel devices and SCSI storage devices). *See* Oeda, Col. 8, lines 9-13 (host computers are set by the operating system). In Oeda, SCSI IDs for target devices are processed by a SCSI control large-scale integrated circuit ("LSI") as described in conjunction with FIGURE 7. The LSI contains n comparators and ID registers, with each register containing a SCSI ID for a target device. *See* Oeda, col. 5, lines 44-48. When a host computer requests a particular target, it does so in the "selection phase" by marking "true" the data line among the eight data lines of the SCSI bus which correspond to the SCSI ID number of the target. *See id.* at col. 5, lines 14-22. Each comparator compares

the ID number asserted during the selection phase (e.g., the ID of the desired target) with the ID in the respective register and, if a match is made, generates an ID coincidence signal. *See id.* at col. 5, lines 48-51. Using the example of FIGURE 7, if a host asserts ID 1 on the SCSI bus, comparator 74 will compare the asserted ID to the contents of register 71, comparator 75 will compare the asserted ID to the contents of register 72 and comparator 76 will compare the asserted ID to the contents of register 73. Because the asserted ID matches the contents of register 71, comparator 74 will generate an ID coincidence signal, indicating that the host is requesting SCSI ID 1. The CPU will then process the subsequent commands and data to read data from or write data to the appropriate partition associated with SCSI ID 1 (e.g., partition 41). *See,* Oeda, col. 5, line 64 through col. 6, line 13. This process is done without regard to the host that actually asserted the SCSI ID 1 in the selection phase. Thus, whenever LSI receives SCSI ID 1 in the selection phase, it processes the corresponding command to read from or write to the appropriate partition regardless of the host device that asserted SCSI ID 1.

The Examiner cites Oeda at Column 7 lines 53-Column 8, line 30 for the proposition that Oeda shows a "map", however, this reliance on Oeda is misplaced. In a multi-host environment, such as that depicted in FIGURE 4 of Oeda (shown above), each host is set beforehand by its operating system to only request specific SCSI ID's. *See* Oeda, col. 8, lines 9-31. Put another way, the operating system sets each host to limit the target SCSI IDs that host can select during the SCSI selection phase. In the example of Oeda, Host 1A is configured by the operating system to request only SCSI ID 1 and SCSI ID 3 and Host 1B is configured by the operating system to request only SCSI ID 2 and SCSI ID 3. *See* Oeda, col. 7, lines 57-65. Oeda states that it is the operating system of the computer system that sets the host computers beforehand. *See* Oeda, col. 8, lines 9-13. After the OS sets the host computer selection configuration, when a particular host selects a particular target ID, for example target ID 1, the LSI of the disk controller identifies the appropriate partition (e.g., partition 41) as described in conjunction with the selection logic of FIGURE 7. Due to Oeda's method for using the operating system to set hosts, the disk controller does not have to (and does not) map host IDs to target SCSI IDs because only hosts configured to request target ID 1, will request ID 1 in the selection phase. Indeed, Oeda fully admits that it does not need or use such a map, stating "when disk controller 5 performs the exclusive control between an access from the host computer 1A and an access from the host computer 1B, it need not consider the difference of the device ID's (here SCSI ID's=7,6) *of the respective host computers 1A and 1B*, but it may merely judge pertinent ones of the device ID's (SCSI ID's=1, 2 and 3) of the respective

partitions 41, 42, 43 selected by the host computer 1A and 1B." Oeda, col. 8, lines 20-30 (emphasis added).

Thus, in the Oeda host-based system, the *hosts* know which target SCSI IDs to request and therefore there is no need for a map at the disk controller that controls whether a particular host is mapped to (and can therefore access) a particular storage device (or portion of a storage device). In Oeda each host knows the storage device SCSI IDs it is permitted to access and makes requests only to those storage device IDs. When the disk controller receives a target SCSI ID from a host it directs commands and data to the partition associated with that requested target SCSI ID without regard to the host that made the request. In other words, the disk controller in Oeda does not consult any map to determine whether the host should be connected to the requested target SCSI ID; rather, if the disk controller of Oeda receives a request, it simply forwards it to the appropriate SCSI ID. There is simply no teaching or suggestion in Oeda that disk controller 5, or any other device in Oeda, maintain a "map" that contains a representation of host devices on one side of the disk controller and representations of storage devices on the other side of the disk controller as recited in the claims of the '972 Patent.

Thus, while Oeda does touch on the concept of setting host computer configuration by the operating system (*see* Oeda, col. 8, lines 9-13), it does not teach or suggest doing any form of "mapping" as claimed in the '972 Patent. For example, setting the host configuration to define which target SCSI IDs a host may request can be done by setting registers in the host's host bus adapter ("HBA"). This methodology entails setting flags in registers of the host HBA indicating which SCSI bus lines the host can or cannot set as true. Thus, each host would simply have a listing or set of flags that indicate which target SCSI IDs are available to that host, but not a map as recited in the '972 Patent that represents that host device itself or the storage devices (i.e., Host 1A does not map itself to storage devices, but simply contains a list or set of register settings indicating that the HBA can only assert true on the bus lines for target SCSI ID 1 and SCSI ID 3). Neither the disk controller nor the individual hosts in Oeda are operable to map between devices on the first transport medium and storage devices. Thus, the host-based configuration method discussed by Oeda does not teach or suggest a map as recited in the '972 Patent.

Furthermore, the mapping recited in the '972 Patent is between host devices connected to the first transport medium (i.e., Fibre Channel devices) and the storage devices that are remote from the host devices. As discussed above, Oeda achieves remoteness through the introduction of Ethernet as discussed in conjunction with FIGURE 6 without the use of NLLBPs.

In the Ethernet based system of Oeda, portions of storage are assigned IP addresses based on the operating system/network protocol that is allowed access that IP address and *not* the specific hosts that can access the storage. *See*, Oeda, col. 10, lines 14-22. Thus, for example, in FIGURE 6 of Oeda, partition 213 is assigned IP address 5002, which is accessible by MS-DOS based computers (i.e., any host computer that runs MS-DOS). In contrast to the invention claimed in the '972 Patent, there is no map between hosts devices and storage devices as the partitions of Oeda's Ethernet system are simply "held in correspondence with OS's and network protocols." *See*, Oeda, col. 10, lines 24-27. Once again, the Oeda system controller (network file server 19 in FIGURE 6) does not contain a map with representations of particular host computers associated with particular storage partitions, but rather Oeda simply reviews the incoming request to a partition, sees that the incoming request uses a network protocol compatible with the IP address, and allows the request to go to the storage partition without regard to which host sent the request. This is not, and Oeda therefore does not teach or suggest, a map containing a representation of the host devices associated with a representation of the remote storage devices as recited in the claims of the '972 Patent.

F. "Access Controls" – Neither Spring nor Oeda Teaches or Suggests Implementing Access Controls

1. Implementing Access Controls

Claim 1 recites a supervisor unit operable that "implements access controls for storage space on the SCSI storage devices" and "allows access from Fibre Channel initiator devices the SCSI storage devices using native low level, block protocol." To implement access controls requires more than simply allowing a host to have access to a storage device. Implementing access controls is a security measure designed to prevent unauthorized access from workstations to particular storage devices or subsets of storage as claimed and described in the '972 Patent. When access controls are implemented, particular workstations may be permitted or denied access to particular storage devices or subsets of storage devices. *See, e.g.,* FIGURE 3 of the '972 Patent and Graphic 5 above. The storage router uses access controls and routing "such that each workstation has controlled access to only the specified partition of [a storage device] which forms virtual local storage for the workstation. This access control allows security control of the specified data partitions." *See*, '972 Patent, col. 4, lines 22-27. Further, according to the Markman Order, to "implement access controls" for storage space on the storage devices means to provide "controls which limit a computer's access to a specific

subset of storage devices or sections of a single storage device." *See,* Markman Order, Exhibit C, page 6.

The access controls of the '972 Patent depend on the map discussed above to control access of devices on a first transport medium (e.g., workstations) to storage devices such that requests from devices connected to the first transport medium are directed to assigned virtual local storage on the storage devices. In other words, the storage to which each workstation is permitted access is controlled through the use of the map. *See*, '972 Patent, col. 4, lines 7-10 ("storage allocated to each . . . workstation 58 through the use of mapping tables or other mapping techniques"). Thus, "the router can . . . map, for each initiator, what storage access is available and what partition is being addressed by a particular request. In this manner, the storage space provided by [storage devices] can be allocated to [devices connected to the first transport medium] . . . ." *See* '972 Patent, col. 8, lines 59-65.

The access controls of Claim 1 thus permit or deny access from particular Fibre Channel host devices to particular SCSI storage devices (or subsets thereof) according to a map that associates the host devices with the remote storage devices. The access controls are part of the configuration for routing commands according to the map from a device connected to the first transport medium to *defined* storage location(s) using NLLBPs (i.e., without requiring the overhead of high level protocols typically required by network servers). The access controls of the present invention thus limit access by workstations to storage devices or subsets of storage devices by allocating storage according to the map.

2. Spring Does Not Implement Access Controls

Regarding Spring, Examiner Fleming stated:

> Implementing of access controls is clearly described throughout the disclosure, especially noting that each USER has access to a large number of removable disc drives (see page 7, lines 18-27), thereby teaching the implementation of *some sort of access controls*, with the storage router (server 20) determining if the requested drive is available, and if so, granting access to the requesting workstation (see page 8, lines 10-17). Thus the access is ultimately controlled and allowed by the storage router (server 20). *See,* May 24 Office Action, page 6.

The passage of Spring cited by Examiner Fleming, namely page 8, lines 10-17, describes a conventional mechanism by which a server coordinates host access to SCSI drives, however this conventional mechanism is accomplished without access controls as

defined in the '972 Patent as the coordination of host access described in Spring does not assign particular storage devices or portions thereof to particular workstations (or other device on the first transport medium). This conventional mechanism is not designed to limit any particular host from accessing any particular storage device, but rather to coordinate access to storage between hosts so as to avoid contention between hosts for the same storage. In the conventional mechanism described in Spring, when a workstation requests a logical disk drive, the server determines if the requested logical disk drive is available and if the logical disk drive is available, allows the workstation to access the logical disk drive. Under this scheme, any workstation can access the logical disk drive so long as the drive is available. In other words, Spring does not describe any mechanism that limits host access based on the ID of the host or which particular storage device the host wishes to access; rather, Spring simply uses a conventional SCSI mechanism to coordinate access based on storage device availability. There is simply no teaching or suggestion in Spring that the availability of the logical drive depends on the workstation requesting the drive and whether that particular workstation has been associated with that drive according to some mapping technique. In Spring, there is no map between the workstations of Spring and the emulated SCSI removable drives (as discussed above) that implements access controls to limit a particular workstations ability to access particular emulated SCSI removable drives.

This lack of access controls is demonstrated by Spring's utilization of aspects of removable SCSI drives to coordinate operations between workstations and the fixed SCSI disks. As described above, server 20 in Spring presents large fixed disk drives as multiple, smaller SCSI removable disks. When a workstation wishes to access one of the emulated SCSI removable disks, the workstation will request the logical drive using conventional SCSI command. *See*, Spring, page 8, lines 4-8. The server will determine if the logical disk drive is available and, if so, will return data to the workstation regarding the logical disk drive including the fact that the logical drive is removable. *See,* Spring, page 8, lines 10-17. The workstation can then transfer data to the logical disk. *See*, Spring, page 9, lines 1-3. Once the data transfer is complete, the workstation will issue a SCSI DISMOUNT command to the emulated SCSI removable disk drive. *See,* Spring, page 10, lines 17-20. Server 20 "acts upon the dismount command by *releasing the logical drive such that it can be accessed by other workstations*." *See*, Spring, page 10, lines 24-25 (emphasis added). Thus, Spring is utilizing mechanisms to coordinate access between hosts and storage devices to make sure the storage devices is available.

However, in contrast to the invention of the '972 Patent, this methodology described in Spring does not limit access of particular workstations to specific assigned subsets of storage devices or portions thereof. Rather, any workstation can access any logical removable drive so long as that logical removable drive is not busy (i.e., is available). The use of the DISMOUNT command is to facilitate the coordination of operations of the multiple workstations that all have access to the same portions of the fixed disk drives, and *does not* prevent the access of particular workstations to specific portions of the fixed disk drives. There is simply no mechanism in Spring that prevents particular hosts from accessing particular storage. Spring thus teaches a system that *coordinates* access by multiple workstations to shared disk drives, not a system that permits or denies access by particular workstations to shared disk drives (i.e., Spring does not "limit a computer's access to specific subset of storage devices or sections of a single storage device"). Applicants respectfully submit that Spring as cited by Examiner Fleming does not teach access controls as defined by the '972 Patent. Accordingly, Applicants respectfully request allowance of Claims 1, 7 and 11 and the respective dependent Claims.

Moreover, the Ethernet based system of Spring does not teach or suggest providing access controls for storage devices that are accessed by host computers using a NLLBP. As discussed above, the Ethernet based system of Spring relies on higher level protocols to achieve remote storage. In fact, Spring provides no discussion as to how to implement access controls in its Ethernet methodology (e.g., there is no discussion how emulating removable SCSI drives are presented over Ethernet to a host or how the DISMOUNT command is processed over Ethernet). Indeed, while there are no access controls as defined by the '972 Patent disclosed in Spring's SCSI-to-SCSI implementation, there is no discussion of any mechanism to limit access for the barely mentioned Ethernet based system of Spring. Thus, Spring fails to teach or suggest implementing access controls from remote storage devices that are accessed by a host computer using an NLLBP. Accordingly, Applicants respectfully request allowance of Claims 1 and 11.

3. Oeda Does Not Teach or Suggest Access Controls

Claim 1 (and Claim 10) of the '972 Patent recites "a supervisor unit . . . operable to maintain a configuration . . . that implements access controls for storage space on SCSI storage devices." Similarly, Claim 7 recites a storage router "to implement access controls for storage space on the SCSI storage devices." The supervisor unit of Claim 1 and storage router of Claim 7 are each clearly configured to connect between the Fibre Channel transport medium

and SCSI transport medium to provide for centralized management of access controls, thus allowing the ability to centrally control and administer storage space. *See*, '972 Patent, col. 2, lines 26-31. Claim 11 further recites "maintaining a configuration . . . that maps between Fibre Channel devices and the SCSI storage devices and that implements access controls for storage space on the SCSI storage devices." The mapping and implementing access controls, as discussed above, are tied together as access controls are implemented to "cause certain requests from FC Initiators to be directed to assigned virtual local storage." *See,* '972 Patent, col. 8, lines 55-56. Again, access controls are performed by a device (supervisor unit/storage router) where mapping between devices on the first transport medium and the storage devices occurs, allowing for central control of storage space.

The SCSI-to-SCSI implementation of FIGURE 4 of Oeda does not provide for this type of access controls. In other words, there is no device in the system of FIGURE 4 of Oeda that manages storage space for hosts using mapping. Instead, in Oeda each host computer is set by the operating system to be assigned to a particular partition. Thus each host in Oeda contains flags, or other indications set beforehand, of the target SCSI bus lines corresponding to target SCSI IDs it can request so that each host can only request those target IDs (e.g., Host 1A is configured so that it can only send requests to SCSI ID 1 and SCSI ID 3). *See*, Oeda, col. 8, lines 9-14. Because Host 1A is configured not to request SCSI ID 2, it will not erroneously request partition 42. *See*, Oeda, col. 8, lines 14-16. The control of the SCSI IDs and therefore corresponding partitions that hosts can request thus occurs at *each of the hosts* and not at a supervisor unit/storage router or through a configuration that maps and implements access controls as in the Claims 1, 7 and 11 of the '972 Patent.

In contrast to Oeda, Claims 1 and 7 of the '972 Patent require a supervisor unit or storage router that "implements access controls". In contrast, Oeda, has no supervisor unit or storage router connected between the hosts and remote storage devices that implements access controls. The disk controller 5 of Oeda as shown with reference to LSI 6 of FIGURE 7, simply forwards requests for a particular SCSI ID to the appropriate target. The disk controller does not process the host IDs, or perform any other mechanism to limit access of any particular host to any particular storage. The disk controller merely processes "pertinent ones of the device ID's (SCSI ID's=1, 2 and 3) of the respective partitions 41, 42, 43 selected by the host computer 1A and 1B." Oeda, col. 8, lines 20-30. Disk controller 5 is completely agnostic as to which host asserts a specific target ID as it is assumed in Oeda available target IDs are set beforehand at the hosts. Thus, disk controller 5 does not act as a storage router or supervisor

unit that implements access controls for the storage space to limit a host's access to portions of the storage space.

Similarly, Oeda does not maintain a configuration "that maps between Fibre Channel devices and the SCSI storage devices and that implements access controls for storage space on the SCSI storage devices" as recited in Claim 11. In the '972 Patent, the implementation of access controls is accomplished in conjunction with the map which maps the host devices to the remote storage devices. As discussed above, neither the disk controller 5 of Oeda nor any other component of Oeda utilize a map that maps between devices connected to the first transport medium and the storage devices. There is, consequently, no component of Oeda that maintains a configuration uses a map to provide for management of storage space "that maps between Fibre Channel devices and the SCSI storage devices and that implements access controls for storage space." In other words, there is no teaching in Oeda of implementing access controls by providing a mapping of what storage access is available and what partition is being addressed by a particular request such that "the storage space provided by [storage devices] can be allocated to [devices connected to the first transport medium] . . . ." *See* '972 Patent, col. 8, lines 59-65.

In Oeda, because the hosts are set to know which SCSI IDs they can request and any host (or other device) that asserts a particular SCSI target ID is granted access to the corresponding partition, there is simply no mechanism (e.g., supervisor unit, storage router or mapping) that limits each particular hosts' access to the storage device or particular partitions of the storage device. Therefore, Applicants respectfully request allowance of Claims 1, 7 and 11.

4. The Ethernet Based Configuration of Oeda Does Not Teach or Suggest Any Form of Access Controls For Remote Storage

As discussed previously, the storage devices for which access controls are provided are "remote storage devices" that are remote from the host devices requesting access. The portions of Oeda cited by the Examiner, namely those associated with of FIGURE 4, as allegedly providing access controls are discussed entirely within the context of a local, SCSI-to-SCSI storage implementation. While this host-based mechanism of Oeda is not the claimed access controls mechanism of the '972 Patent (as discussed above), Oeda provides no teaching or suggestion as to how even that host-based mechanism could be implemented for remote storage and, indeed, discards entirely that host-based storage allocation mechanism of FIGURE 4 when moving to the remote storage implementation of FIGURE 6.

As discussed above, Oeda introduces Ethernet to achieve remoteness. As shown in FIGURE 6, portions of storage are assigned IP addresses based on the operating system that can access that IP address, not the specific hosts that can access the storage. *See*, Oeda, col. 10, lines 14-22. Thus, for example, partition 213 is assigned IP address 5002, which is accessible by MS-DOS based computers. *See*, Oeda, col. 10, lines 37-39. Any computer that supports MS-DOS can access partition 213. *See*, Oeda, col. 10, lines 46-54 (explaining how the network file server handles requests to a particular IP address). The network file server does not provide any security to prevent hosts using the same operating system from accessing each other's data but simply forwards requests to a particular IP address to the proper storage.

While Oeda discloses providing remote storage, this is done using a higher level network protocol (not using NLLBP) without any access controls as claimed in the '972 Patent. Any computer using the same operating system and higher level network protocols can access the same partitions of storage. Oeda does not teach or suggest providing access controls for remote storage that is accessed by a host using NLLBP and, consequently, does not remedy the deficiencies of Spring. Applicants therefore respectfully request allowance of Claims 1 and 11.

G. The Combination of Oeda and Spring Does Not Teach or Suggest the Present Invention

Even assuming *arguendo* that Spring and Oeda can be combined as suggested by Examiner Fleming, these references in combination do not teach or suggest the present invention. If combined in a SCSI-to-SCSI system, the combination of Spring and Oeda fails to teach or suggest mapping and implementing access controls for the storage space or mapping and implementing access controls at a supervisor unit or storage router. For remote storage, both Spring and Oeda teach the use of higher level network protocols and neither teaches mapping between devices connected to the Ethernet transport medium and the remote storage devices or implementing access controls for the storage space on the remote storage devices. Thus, the combination of Spring and Oeda fails to disclose allowing access to remote storage using a NLLBP in conjunction with providing a mapping between devices connected to a first transport medium and remote storage in conjunction with implementing access controls for the remote storage devices.

H. The Cummings Reference Does Not Address the Deficiencies of Spring and Oeda

Similarly, the Cummings reference does not remedy the deficiencies of Spring and/or Oeda. Cummings is an article written near the inception of Fibre Channel that prophesizes potential uses for Fibre Channel without actually providing implementation details for any of these uses. Cummings provides no teaching or suggestion of a map or access controls, and more particularly, does not teach or suggest a map between Fibre Channel host devices and remote storage devices or implementation of access controls between a host and remote storage devices as recited in independent claims 1, 7 and 11. Consequently, Cummings in combination with Spring and Oeda fails to teach or suggest the claimed invention.

I. The Jibbe Reference Does Not Address the Deficiencies of Spring and Oeda

Jibbe discloses a SCSI interface that is used to connect a host computer to a SCSI disk array. The interface of Jibbe allows a host computer to transfer operations to a number of disk drives configured as a RAID 1, 2, 3, 4, or 5 disk array. *See*, Jibbe, Abstract. There is simply no teaching or suggestion in Jibbe that the disk array should be attached by anything other than a local SCSI bus and consequently does not teach or suggest remote storage devices. Moreover, Examiner Fleming did not cite the Jibbe reference as showing, nor does the Jibbe reference appear to show, mapping between devices connected to the first transport medium and the storage devices, implementing access controls or allowing access from hosts to storage devices using NLLBP.

J. The Crouse Reference Does Not Address the Deficiencies of Spring and Oeda

The Examiner relies on Crouse in rejecting hardware specific features of the claimed invention. Applicants note, however, that the Examiner has not pointed out where Crouse makes up for the deficiencies of the other references. Consequently, the burden of making out a *prima facie* case of obviousness has not been met.

K. Summary: There is No *Prima Facie* Case of Obviousness

The '972 Patent provides a system and method which allows a host computer to access **remote** storage devices using an NLLBP, while mapping between the host computers and remote storage devices (or portions thereof) and implementing access controls for storage space on the remote storage devices. Spring and Oeda teach either local SCSI-to-SCSI systems that do not provide remote storage or Ethernet-to-SCSI systems that rely on higher level protocols. While the Examiner has attempted to point to access controls in Spring and access controls and mapping in Oeda, these references show neither access controls nor mapping. Moreover, the portions in Spring and Oeda relied on for mapping and access controls (which do not, in fact, show mapping and access controls as discussed above) only apply to the SCSI-to-SCSI local storage implementations and do not apply to the Ethernet-to-SCSI implementations of these references that allow for remote storage. Consequently, Spring and Oeda do not show a system or method that provides access from host computers to remote storage using NLLBP, while applying access controls that limit a host computer's access to specified portions of the remote storage, nor do they teach mapping between the host computers and the remote storage devices.

None of the additional art cited by the Examiner remedy the deficiencies of Oeda and Spring. Cummings, as discussed above, does not teach or suggest mapping between devices connected to the first transport medium and remote storage devices or implementing access controls between host devices and remote storage devices as recited in the present invention. Jibbe does not address the issue of remote storage, nor does Jibbe discuss access controls or mapping. Crouse, similarly, does not address the deficiencies of Oeda and Spring. Thus, these references do not make up for the shortcomings of Oeda and Spring.

Applicants respectfully submit that the Examiner has failed to establish a *prima facie* case of obviousness for Claims 1-14 as the prior art references do not disclose, teach or suggest all of the claim limitations. Specifically, the prior art cited by Examiner Fleming does not teach or suggest: i) providing virtual local storage on remote storage devices and allowing access from devices connected to the first transport medium to the remote storage devices using a NLLBP; in conjunction with ii) mapping between devices on the first transport medium and the storage devices; in conjunction with iii) implementing access controls. While Examiner Fleming provided a thorough analysis of Spring and Oeda, these references simply fail to teach the claimed limitations. Furthermore, Cummings, Jibbe and Crouse do not make up for the

deficiencies of Spring and Oeda. Accordingly, Applicants respectfully request allowance of Claims 1-14.

III. Conclusion

Applicants appreciate Examiner Fleming's consideration of the previous response and Examiner's interview when drafting the May 24 Office Action. Moreover, Applicants further appreciate Examiner Fleming's careful and detailed review of all of the submitted prior art and the issuance of a non-final office action. Applicants respectfully submit, however, that Claims 1-14 are distinguishable from Spring, Oeda, Cummings, Crouse and Jibbe for the reasons stated herein. Therefore, Applicants respectfully request allowance of all claims subject to reexamination.

This Reply was served via First Class Mail on July 22, 2005 to Larry E. Severin, Wang, Hartmann & Gibbs, PC, 1301 Dove Street #1050, Newport Beach, CA 92660.

The Director of the U.S. Patent and Trademark Office is hereby authorized to charge any fees or credit any overpayments to Deposit Account No. 50-3183 of Sprinkle IP Law Group.

Respectfully submitted,

Sprinkle IP Law Group
Attorneys for Applicant

John L. Adair
Reg. No. 48,828

Date: July 22, 2005

1301 W. 25th Street, Suite 408
Austin, TX 78705
Tel. (512) 637-9223
Fax. (512) 371-9088

This Page is Inserted by IFW Indexing and Scanning Operations and is not part of the Official Record

BEST AVAILABLE IMAGES

Defective images within this document are accurate representations of the original documents submitted by the applicant.

Defects in the images include but are not limited to the items checked:

- ☐ BLACK BORDERS
- ☐ IMAGE CUT OFF AT TOP, BOTTOM OR SIDES
- ☑ FADED TEXT OR DRAWING
- ☐ BLURRED OR ILLEGIBLE TEXT OR DRAWING
- ☐ SKEWED/SLANTED IMAGES
- ☐ COLOR OR BLACK AND WHITE PHOTOGRAPHS
- ☐ GRAY SCALE DOCUMENTS
- ☑ LINES OR MARKS ON ORIGINAL DOCUMENT
- ☐ REFERENCE(S) OR EXHIBIT(S) SUBMITTED ARE POOR QUALITY
- ☐ OTHER: _____

IMAGES ARE BEST AVAILABLE COPY.
As rescanning these documents will not correct the image problems checked, please do not report these problems to the IFW Image Problem Mailbox.

EXHIBIT D

RECEIVED
MAR 1 0 2003
CLERK, U.S. DISTRICT COURT
WESTERN DISTRICT OF TEXAS
BY _____ DEPUTY CLERK

NOTE: Pursuant to Fed. Cir. R. 47.6, this disposition is not citable as precedent. It is a public record. This disposition will appear in tables published periodically.

United States Court of Appeals for the Federal Circuit

FILED
MAR 1 0 2003
CLERK, U.S. DISTRICT COURT
WESTERN DISTRICT OF TEXAS
BY _____ DEPUTY CLERK

02-1158

CROSSROADS SYSTEMS, (TEXAS), INC.,

Plaintiff-Appellee,

v.

CHAPARRAL NETWORK STORAGE, INC.,

Defendant-Appellant.

FILED
U.S. COURT OF APPEALS FOR
THE FEDERAL CIRCUIT
FEB 1 2 2003
JAN HORBALY
CLERK

JUDGMENT

ON APPEAL from the United States District Court for the Western District of Texas

In CASE NO(S). 00-CV-217 and 00-CV-621

This CAUSE having been heard and considered, it is

ORDERED and ADJUDGED: AFFIRMED. See Fed. Cir. R. 36

Per Curiam (NEWMAN, SCHALL, and DYK, Circuit Judges).

CERTIFIED COPY
I HEREBY CERTIFY THIS DOCUMENT
IS A TRUE AND CORRECT COPY
OF THE ORIGINAL ON FILE.
UNITED STATES COURT OF APPEALS
FOR THE FEDERAL CIRCUIT
By: _____ Date: 3/5/03

ENTERED BY ORDER OF THE COURT

DATED: FEB 1 2 2003

Jan Horbaly, Clerk

ISSUED AS A MANDATE: MARCH 5, 2003

Costs Against Appellant:
Total $97.35

186

03/17/2003 MON 12:47 [TX/RX NO 6278]

EXHIBIT C

Received 07/27/2000 12:00 09:26 on line [7] for DB01961 printed 07/ JUU 12:15 * PB 2/17

UNITED STATES DISTRICT COURT
WESTERN DISTRICT OF TEXAS
AUSTIN DIVISION

FILED
JUL 27 2000
U.S. DISTRICT COURT
BY CLERK'S OFFICE
DEPUTY

CROSSROADS SYSTEMS, (TEXAS), INC.	§	
	§	
VS.	§	NO. A 00 CA 217 SS
	§	
CHAPARRAL NETWORK STORAGE, INC.	§	

CROSSROADS SYSTEMS, (TEXAS), INC.	§	
	§	
VS.	§	NO. A 00 CA 248 SS
	§	
PATHLIGHT TECHNOLOGY, INC.	§	

ORDER

BE IT REMEMBERED that on the 25th day of July 2000 the Court, in accordance with *Markman v. Westview Instruments, Inc.*, 52 F.3d 967 (Fed. Cir. 1995), *aff'd*, 116 S. Ct. 1384 (1996), held a hearing at which the parties appeared by representation of counsel and made oral arguments on their proposed claims construction. At the hearing, the parties presented a Joint Stipulation of Claim Construction, indicating that the parties have agreed upon the definitions for seventeen terms and/or phrases in U.S. Patent No. 5,941,972 ("the '972 patent"), and that only ten terms and/or phrases in the '972 patent remain in dispute. After considering the briefs, the case file as a whole, and the applicable law, the Court enters the following opinion and order.

I. Standard for Claims Construction

The construction of claims, or the definition of the terms used in the claims, is a matter of law for the Court. When adopting a claim construction, the Court should first consider the intrinsic evidence, which includes the claims, the specification, and the prosecution history. *See Vitronics*

RECEIVED
FEB 07 2005
OFFICE OF PETITIONS

Oracle-Huawei-NetApp Ex. 1024, pg. 2091

Corp. v. Conceptronic, Inc., 90 F.3d 1576, 1582 (Fed. Cir. 1996) (explaining that intrinsic evidence is "the most significant source of the legally operative meaning of disputed claim language"). Not surprisingly, the starting point is always "the words of the claims themselves." *Id.; see also Comark Communications, Inc. v. Harris Corp.*, 156 F.3d 1182, 1186 (Fed. Cir. 1998). The words of the claims are generally given their ordinary and customary meaning, unless the patentee intended to use a "special definition of the term clearly stated in the patent specification or file history." *Vitronics*, 90 F.3d at 1582. Thus, the Court must review the specification and file history to determine whether the patentee intended to use any such "special" definitions. *See id.* The specification and file history may also be consulted as general guides for claim interpretation. *See Comark*, 156 F.3d at 1186.

The specification and file history, however, are not substitutes for the plain language of the claims. The specification is not meant to describe the full scope of the patent – it includes only a written description of the invention, sufficient to enable a person skilled in the art to make and use it, as well as the invention's "best mode." *See* 35 U.S.C. § 112. Thus, the claims may be broader than the specification, and generally should not be confined to the examples of the invention set forth in the specification. *See Comark*, 156 F.3d at 1187 ("Although the specification may aid the court in interpreting the meaning of disputed claim language, particular embodiments and examples appearing in the specification will not generally be read into the claims."). Indeed, the Federal Circuit has repeatedly emphasized that "limitations from the specification are not to be read into the claims." *Id.* at 1186.

In addition to examining the intrinsic evidence the Court may, in its discretion, receive extrinsic evidence regarding the proper construction of the patent's terms. *See Key Pharmaceuticals*

Oracle-Huawei-NetApp Ex. 1024, pg. 2092

v. Hercon Labs. Corp., 161 F.3d 709, 716 (Fed. Cir. 1998) ("[T]rial courts generally can hear expert testimony for background and education on the technology implicated by the presented claim construction issues, and trial courts have broad discretion in this regard."). The plaintiff has provided an expert affidavit and the defendant has provided excerpts from several dictionaries as extrinsic evidence concerning the construction of the terms of the '972 patent.

II. "implements access controls for storage space on the SCSI storage devices"

This phrase is used in claims 1, 10 and 11 of the '972 patent. The parties dispute whether the phrase refers to "access controls" only for certain subsections of a divided SCSI storage device, or whether it also includes limiting access to entire undivided SCSI storage devices. The plaintiff argues the phrase includes both kinds of access controls; the defendants say the phrase refers only to access controls for various subsections within a single divided SCSI storage device. The defendants also argue the plaintiff's construction is improper because, if adopted, it will result in the '972 patent being invalidated by prior art.

The plaintiff proposes the following definition: "provides controls which limit a computer's access to a specific subset of storage devices or sections of a single storage device." *See* Plaintiff's Brief, at 20. The defendants propose the phrase should be defined as "partitions the storage space on each one of the SCSI storage devices and defines the accessibility of each resulting partition." *See* Defendants' Brief, Ex. 2. The Court agrees with the plaintiff.

The intrinsic evidence of the '972 patent shows the plaintiff's invention is intended to restrict access both to subsections of a SCSI storage device, as well as to entire, undivided SCSI devices. First, the plain language of this phrase refers only to "storage space" and does not limit the space

Oracle-Huawei-NetApp Ex. 1024, pg. 2093

only to subsections of a divided SCSI storage device. Second, Figure 3 of the '972 patent supports a broad reading of this phrase. Figure 3 shows three SCSI storage devices, two of which are undivided (60 and 64). The third device (62) is divided into four subsections of storage space. From the simple labeling on Figure 3, it is clear that the entire, undivided storage device (64) is meant to be accessed only by a single workstation (computer E). Thus, Figure 3 expressly shows that the plaintiff's invention contemplates using "access controls" for an entire, undivided storage device as well as for the divided subsections within a single storage device.[1] Third, the language of the specification expressly describes limiting access to an entire, undivided SCSI storage device. Specifically, in referring to Figure 3, the specification states "storage device 64 can be allocated as storage for the remaining workstation 58 (workstation E)." *See* '972 Patent, at 4:20 - 4:21. At the hearing, the defendants' counsel argued that, simply because Figure 3 describes this feature does not mean the feature was intended to be part of the claimed invention. The Court soundly rejects this argument. Figure 3 is meant to be an example of how the plaintiff's claimed invention can be implemented, and the specification clearly describes this figure as illustrating one implementation of the claimed invention. Adopting the defendants' argument would ignore a fundamental principle of claims construction, oft repeated in the defendants' brief and oral arguments, that the specification is "the single best guide to the meaning of a disputed term." *See Vitronics*, 90 F.3d at 1582. Finally, the defendants correctly point out that the specification also refers to the single, undivided storage device (64) as a "partition (i.e., logical storage definition)." *See* '972 Patent, at 4:44 - 4:47. Rather than compel the defendants' proposed construction, however, this language supports the plaintiff's

[1] Figure 3 also discloses – and the defendants do not dispute – that the plaintiff's invention contemplates limiting access to various subsections of the divided SCSI storage device (62).

Oracle-Huawei-NetApp Ex. 1024, pg. 2094

argument at the hearing that a discrete unit of storage – whether an entire SCSI storage device or a subsection within that device – can be referred to as a "partition."[2]

The defendants also argue that, even if the intrinsic evidence supports the plaintiff's proposed definition, this definition is nonetheless improper because it would cause the '972 patent to read directly upon prior art (and therefore be invalid). It is true that "claims should be read in a way that avoids ensnaring prior art if it is possible to do so." *Harris Corp. v. IXYS Corp.*, 114 F.3d 1149, 1153 (Fed. Cir. 1997). However, the defendants have not shown that the prior art at issue – the Lui patent – would be "ensnared" by adopting the plaintiff's definition. Importantly, the Lui patent was part of the prior art expressly considered by the patent examiner before granting the '972 patent. The patent examiner apparently did not use the Lui patent to reject a single claim in the '972 patent. The patent examiner also did not issue an Office Action requiring the plaintiff to distinguish its invention from the Lui patent on access control (or any other) grounds. Although the Patent Office is not the model of efficiency or thoroughness, its failure to cite the Lui patent as potentially invalidating prior art creates a strong presumption that the Lui patent does not read upon the plaintiff's claimed invention. In addition, it does not appear to the Court that the Lui patent reads upon the '972 claimed invention. While the Lui patent does disclose a system of Fibre Channel computers and SCSI storage devices, *see* Defendants' Brief, Ex. 6, at 2:53 - 2:65, the similarities end there. The Lui patent concerns an invention of "bypass circuits" used to "prevent the failure of any device" in the system. *See id.*, at Abstract. The invention of the Lui patent is not concerned with the swift transfer of information across a router, and thus does not disclose techniques for mapping,

[2] The Court expressly notes, however, that it is not defining the term "partition" in this order, as that term is not used in the '972 claim language.

implementing access controls, or a memory buffer.[3] At the hearing, the defendants' counsel suggested that Figure 2 of the Lui patent discloses the claimed invention of the '972 patent. However, Figure 2 of the Lui patent is not a part of the Lui invention; rather it is an illustration of a "conventional" network system that the Lui invention allegedly improves upon. *See id.* at 3:66. The Court rejects the defendants' argument that "conventional" network systems also read directly upon the '972 claimed invention. The patent examiner may have let one piece of prior art slip by; he or she would not have missed a "conventional" network system directly applicable to the plaintiff's claimed invention.

In sum, the Court will adopt the plaintiff's proposed definition and construe the phrase "implements access controls" in the claims of the '972 patent to mean "provides controls which limit a computer's access to a specific subset of storage devices or sections of a single storage device."

III. "allocation of subsets of storage space to associated Fibre Channel devices, wherein each subset is only accessible by the associated Fibre Chanel device"

The dispute here is essentially the same as in the preceding section. This phrase is used in claims 2, 8 and 12 of the '972 patent. As it did with the "implements access controls . . ." phrase, the plaintiff argues the "allocation . . ." phrase means that specific Fibre Channel devices can be allocated storage space on subsections of a single SCSI storage device and on entire, undivided SCSI storage devices. The defendants stick to their general argument on this issue, and contend the phrase

[3] The defendants argue these features are "implicitly" found in the Lui specification and in any event were disclosed in other prior art. *See* Defendants' Brief, at 12 and n.1. The Court is not persuaded that these features are "implicitly" disclosed by the Lui patent, and the other prior art briefly referenced by the defendants makes no mention of combining that prior art with the invention of the Lui patent, or vice-versa.

Oracle-Huawei-NetApp Ex. 1024, pg. 2096

means storage space can only be allocated on subsections of a single divided SCSI storage device. Both parties agree this storage space, however it is defined, can only be accessed by the specified Fibre Channel device(s).

The plaintiff's proposed definition is "subsets of storage space are allocated to specific Fibre Channel devices." *See* Plaintiff's Brief, at 26. The defendants say the phrase should be defined to mean "one or more partitions that are only accessible by a single Fibre Channel device." *See* Defendants' Brief, Ex. 2. For the reasons discussed in the preceding section, the Court adopts the plaintiff's proposed construction.

IV. **"supervisor unit"**

This term is used in claims 1, 2 and 10 of the '972 patent. The plaintiff contends this term should be defined as "a microprocessor programmed to process data in a buffer in order to map between Fibre Channel devices and SCSI devices and which implements access controls." *See* Plaintiff's Brief, at 25. The defendants argue the term should be defined as "an Intel 80960RP processor" with several specific features. *See* Defendants' Brief, Ex. 2.

The defendants argue their construction is mandated by the means-plus-function analysis of § 112(6) of the Patent Act, because the claims of the '972 patent do not adequately describe the "supervisor unit" to be used. *See* Defendants' Brief, at 15-17. The plaintiff argues that § 112(6) does not apply because the term "means" is not used with the term "supervisor unit" and because the term "supervisor unit" is adequately described by other claim language in the '972 patent. *See* Plaintiff's *Markman* Exhibits, at 35-39.

Section 112(6) of the Patent Act provides that when a claim refers to the "means for" a

Oracle-Huawei-NetApp Ex. 1024, pg. 2097

specific act, but fails to adequately describe these means, the means then must be defined by reference to the specification. *See* 35 U.S.C. § 112(6).[4] If the claim language at issue does not include the term "means," there is a presumption that the § 112(6) means-plus-function analysis does not apply. *See Al-Site Corp. v. VSI Int'l, Inc.*, 174 F.3d 1308, 1318 (Fed. Cir. 1999) ("[W]hen an element of a claim does not use the term 'means,' treatment as a means-plus-function claim element is generally not appropriate."). To overcome this presumption, the party seeking to apply § 112(6) must show the claim language at issue is purely functional and that other claim language does not adequately describe the disputed term. *See id.* ("[W]hen it is apparent that the element invokes purely functional terms, without the additional recital of specific structure or material for performing that function, the claim element may be a means-plus-function element despite the lack of express means-plus- function language."). From a review of the claim language as a whole, the Court agrees with the plaintiff that the term "supervisor unit" is not purely functional, but refers instead to a device that can perform the tasks specifically listed in the claim language of the '972 patent. Specifically, claims 1, 2 and 10 of the '972 patent describe a "supervisor unit" that can: (1) maintain and map the configuration of networked Fibre Channel and SCSI storage devices; (2) include in this configuration an allocation of specific storage space to specific Fibre Channel devices; (3) implement access controls for the SCSI storage devices; and (4) process data in the storage router's buffer to allow an exchange between the Fibre Channel and SCSI storage devices. *See* '972 Patent,

[4] Section 112(6) reads as follows: "An element in a claim for a combination may be expressed as a means or step for performing a specified function without the recital of structure, material, or acts in support thereof, and such claim shall be construed to cover the corresponding structure, material, or acts described in the specification and equivalents thereof." 35 U.S.C. § 112(6).

Oracle-Huawei-NetApp Ex. 1024, pg. 2098

at Claims 1, 2 and 10. These are the same tasks described in the plaintiff's proposed definition. In addition, the specification expressly defines the "supervisor unit" as "a microprocessor" (a computer chip) and specifically as "a microprocessor for controlling operation of storage router 56 and to handle mapping and security access for requests between Fibre Channel 52 and SCSI bus 54." *See id.* at 5:7 - 5:10. However, neither the specification (nor the claim language) limits the '972 patent to the specific Intel computer chip referenced by the defendants. Although the defendants correctly point out that the Intel 80960 chip is the only computer chip expressly named in the '972 patent and the specification describes many features this chip, the defendants fail to note that the Intel 80960 chip is listed as only "one implementation" of the claimed invention's microprocessor. *See* '972 Patent, at 5:63. The defendants are attempting exactly what the Federal Circuit prohibits – to limit the claims to the preferred embodiment and examples of the specification. "This court has cautioned against limiting the claimed invention to preferred embodiments or specific examples in the specification." *Comark*, 156 F.3d at 1186 (quoting *Texas Instruments, Inc. v. United States Int'l Trade Comm'n*, 805 F.2d 1558, 1563 (Fed. Cir. 1988)). The Court will not use an example of "one implementation" in the specification to limit the plain language of the claims. Accordingly, the Court adopts the plaintiff's definition of "supervisor unit" and will construe that term as used in the claims of the '972 patent to mean "a microprocessor programmed to process data in a buffer in order to map between Fibre Channel devices and SCSI devices and which implements access controls."

V. "SCSI storage devices"

This term is used in claims 1, 4, 7, 9-11 and 14 of the '972 patent. The plaintiff argues that this term essentially needs no further definition because the term SCSI is so well-known in the industry, but proposes that the term can be further defined as "any storage device including, for

example, a tape drive, CD-ROM drive, or a hard disk drive that understands the SCSI protocol and can communicate using the SCSI protocol." *See* Plaintiff's Brief, at 18. The defendants argue the term should be defined as "any storage device that uses a SCSI standard and has a unique BUS:TARGET:LUN address." *See* Defendants' Brief, Ex. 2.

The Court agrees with the plaintiff. Essentially, the defendants contend their narrow definition should be used because it "comports with '972 specification" and its discussion of SCSI storage devices. *See* Defendant's Brief, at 14. However, the specification language referred to by the defendants is only one example of how the SCSI storage device addressing scheme "can" be represented. *See* '972 Patent, at 7:39. Again, the defendants are impermissibly trying to limit the claim language to an example given in the specification. *See Comark*, 156 F.3d at 1186-87. For the sake of extra clarity, the Court will adopt the plaintiff's proposed definition for this term.

VI. "process data in the buffer"

This phrase is used in claims 1 and 10 of the '972 patent. The plaintiff argues the phrase is adequately defined on its own and by the surrounding claim language. The defendants contend the phrase should be defined as "to manipulate data in the buffer in a manner to (a) achieve mapping between Fibre Channel and SCSI devices, and (b) apply access controls and routing functions." *See* Defendants' Brief, Ex. 2.

The plain language of claims 1 and 10 disclose that the supervisor unit (the microprocessor) processes data in the buffer "to interface between the Fibre Channel controller and the SCSI controller to allow access from Fibre Channel initiator devices to SCSI storage devices using the native low level, block protocol in accordance with the configuration." *See* '972 Patent, at Claims 1 and 10. This language adequately describes what it means to "process data in the buffer" for these

Oracle-Huawei-NetApp Ex. 1024, pg. 2100

claims. Simply because the specification may use slightly different language to describe this "processing," *see id.* at 5:18 - 5:20, does not entitle the defendants to adopt the specification language over the plain language of the claims. The Court will not further define this phrase.

VII. "storage router"

This term is used in claims 1-7 and 10 of the '972 patent. The plaintiff argues the term needs no further definition for claims 1-6, and for claim 7 it should be defined as "a device which provides virtual local storage, maps, implements access controls, and allows access using native low level block protocols." *See* Plaintiff's Brief, at 27. The defendants contend the term should mean "a bridge device that connects a Fibre Channel link directly to a SCSI bus and enables the exchange of SCSI command set information between application clients on SCSI bus devices and the Fibre Channel links." *See* Defendants' Brief, Ex. 2.

The defendants do not make any argument for their proposed definition in their brief, and did not discuss the term at the July 25 hearing. In their notebook of exhibits presented at the hearing, the defendants include one page which supports their definition with a quote from the specification. *See* Defendants' *Markman* Exhibits, "Markman Presentation" Tab, at 22. This argument is disingenuous. The specification language quoted by the defendants is immediately followed by several sentences further defining "storage router." Indeed, the next sentence begins "Further, the storage router applies access controls . . . ." *See* '972 Patent, at 5:30. The defendants' attempt to limit the term "storage router" to one of several descriptive sentences in the specification is not well-taken. In addition, the Court finds the term "storage router," as used in all claims of the '972 patent, is adequately described by the additional language of the claims, which discloses in detail the various functions and/or qualities of the storage router. The Court will not further define this term.

Oracle-Huawei-NetApp Ex. 1024, pg. 2101

VIII. "map"

This term is used in claims 1, 7, 10 and 11 of the '972 patent. The plaintiff contends the term means "to create a path from a device on one side of the storage router to a device on the other side of the router, *i.e.* from a Fibre Channel device to a SCSI device (or vice-versa). A 'map' contains a representation of devices on each side of the storage router, so that when a device on one side of the storage router wants to communicate to a device on the other side of the storage router, the storage router can connect the devices." *See* Plaintiff's Brief, at 22. The defendants argue the term means "to translate addresses." *See* Defendants' Brief, Ex. 2.

In support of their definition, the defendants point only to a dictionary definition of "map." *See* Defendants' Brief, at 13 and Ex. 4. The plaintiff, on the other hand, cites to specific portions of the specification that support its definitions of map (both as a verb and a noun) as used in the claims of the '972 patent. *See* Plaintiff's Brief, at 22 (citing '972 Patent, at 1:66 - 2:5 and 6:65 - 7:6). Because intrinsic evidence is far more salient than a dictionary definition, and because the Court agrees that the specification language cited by the plaintiff supports its construction of the term "map," the Court will adopt the plaintiff's proposed definition of this term.

IX. "Fibre Channel protocol unit" and "SCSI protocol unit"

These terms are used in claims 5 and 6 of the '972 patent. The plaintiff contends these phrases should be defined as "a portion of the Fibre Channel controller which connects to the Fibre Channel transport medium" and "a portion of the SCSI controller which interfaces to the SCSI bus." *See* Plaintiff's Brief, at 27. The defendants say the terms mean "block and equivalents thereof that connects to the Fibre Channel transport medium" and "block and equivalents thereof that connects to the SCSI bus transport medium." *See* Defendants' Brief, Ex. 2.

Oracle-Huawei-NetApp Ex. 1024, pg. 2102

The defendants argue the means-plus-function analysis of § 112(6) should apply here because the terms are well-known and are not defined in two dictionaries cited by the defendants. *See* Defendants' Brief, at 7-8, 14-15, Ex. 4 and Ex. 5. However, the defendants do not indicate how the term should be defined in reference to the specification, and in fact contend "the '972 specification fails to reveal any structure corresponding to the claimed function." *See id.* at 8 and 15. The defendants then propose the word "block" should be used to describe these terms because the "protocol units" are "simply depicted as a block within the diagram of Figure 5" of the '972 patent. *See id.* This reasoning is wholly unpersuasive. Simply because a figure in the patent physically depicts the protocol units in a block-like shape, it does not follow that the units should be defined as "blocks or equivalents thereof." Under that reasoning, the SCSI storage devices, which are physically depicted as cylinders in the '972 patent, could be defined simply as "cylinders, oil drums or monkey barrels, or equivalents thereof." As the plaintiff correctly points out, the language of claims 5 and 6 plainly states that the "protocol units" for both devices are part of the "controllers" for the devices, and are intended to "connect" the devices to various "transport media" (*i.e.*, to various cables). *See* '972 Patent, at Claims 5 and 6. Accordingly, the Court adopts the plaintiff's definitions for these terms, and will construe the terms to mean "a portion of the Fibre Channel controller which connects to the Fibre Channel transport medium" and "a portion of the SCSI controller which interfaces to the SCSI bus."

X. "interface"

In their Joint Stipulation of Claim Construction, the parties claim the meaning of the term "interface" is in dispute. However, this phrase is not discussed in any of the parties' briefs, and neither side presented an argument at the July 25 hearing as to why the term is disputed. This term

Oracle-Huawei-NetApp Ex. 1024, pg. 2103

has a standard and ordinary meaning—even to a federal judge—and the Court will not further define it.

XI. Undisputed Terms

Finally, in their Joint Stipulation of Claim Construction, the parties have stipulated to the construction of 17 other terms in the '972 patent. The Court will therefore adopt these stipulated constructions, solely for the purpose of this lawsuit.

Accordingly, the Court enters the following order:

IT IS ORDERED that the attached construction of the patent claims will be incorporated into any jury instructions given in this cause and will be applied by the Court in ruling on the issues raised in summary judgment.

SIGNED on this 26th day of July 2000.

UNITED STATES DISTRICT JUDGE

Oracle-Huawei-NetApp Ex. 1024, pg. 2104

Received 01/27/2000 12:00 ... on time, ... for ... printed 01/2 ... 12:13 ... Pg 16/17

CONSTRUCTION OF CLAIMS
U.S. PATENT NO. 5,941,972

Disputed Terms

The phrase "implements access controls for storage space on the SCSI storage devices" means provides controls which limit a computer's access to a specific subset of storage devices or sections of a single storage device.

The phrase "allocation of subsets of storage space to associated Fibre Channel devices, wherein each subset is only accessible by the associated Fibre Chanel device" means subsets of storage space are allocated to specific Fibre Channel devices.

A "supervisor unit" is a microprocessor programmed to process data in a buffer in order to map between Fibre Channel devices and SCSI devices and which implements access controls.

A "SCSI storage device" is any storage device including, for example, a tape drive, CD-ROM drive, or a hard disk drive that understands the SCSI protocol and can communicate using the SCSI protocol.

The term "map" means to create a path from a device on one side of the storage router to a device on the other side of the router, *i.e.* from a Fibre Channel device to a SCSI device (or vice-versa). A "map" contains a representation of devices on each side of the storage router, so that when a device on one side of the storage router wants to communicate with a device on the other side of the storage router, the storage router can connect the devices.

A "Fibre Channel protocol unit" is a portion of the Fibre Channel controller which connects to the Fibre Channel transport medium.

A "SCSI protocol unit" is a portion of the SCSI controller which interfaces to the SCSI bus.

Stipulated / Undisputed Terms

A "buffer" is a memory device that is utilized to temporarily hold data.

A "direct memory access (DMA) interface" is a device that acts under little or no microprocessor control to access memory for data transfer.

A "Fibre Channel" is a known high-speed serial interconnect, the structure and operation of which is described, for example, in Fibre Channel Physical and Signaling Interface (FC-PH), ANSI X3.230 Fibre Channel Arbitrated Loop (FC-AL), and ANSI X3.272 Fibre Channel Private Loop Direct Attach (FC-PLDA).

A "Fibre Channel controller" is a device that interfaces with a Fibre Channel transport medium.

A "Fibre Channel device" is any device, such as a computer, that understands Fibre Channel protocol and can communicate using Fibre Channel protocol.

"Fibre Channel protocol" is a set of rules that apply to Fibre Channel.

A "Fibre Channel transport medium" is a serial optical or electrical communications link that connects devices using Fibre Channel protocol.

A "first-in-first-out queue" is a multi-element data structure from which elements can be removed only in the same order in which they were inserted; that is, it follows a first in, first out (FIFO) constraint.

A "hard disk drive" is a well known magnetic storage media, and includes a SCSI hard disk drive.

An "initiator device" is a device that issues requests for data or storage.

"Maintain(ing) a configuration" means keep(ing) a modifiable setting of information.

A "native low level, block protocol" is a set of rules or standards that enable computers to exchange information and do not involve the overhead of high level protocols and file systems typically required by network servers.

A "SCSI" (Small Computer System Interface) is a high speed parallel interface that may be used to connect components of a computer system.

A "SCSI bus transport medium" is a cable consisting of a group of parallel wires (normally 68) that forms a communications path between a SCSI storage device and another device, such as a computer.

A "SCSI controller" is a device that interfaces with the SCSI bus transport medium.

"Virtual local storage" is a specific subset of overall data stored in storage devices that has the appearance and characteristics of local storage.

A "workstation" is a remote computing device that connects to the Fibre Channel, and may consist of a personal computer.

Oracle-Huawei-NetApp Ex. 1024, pg. 2106

This Page is Inserted by IFW Indexing and Scanning Operations and is not part of the Official Record

BEST AVAILABLE IMAGES

Defective images within this document are accurate representations of the original documents submitted by the applicant.

Defects in the images include but are not limited to the items checked:

- ☐ BLACK BORDERS
- ☑ IMAGE CUT OFF AT TOP, BOTTOM OR SIDES
- ☑ FADED TEXT OR DRAWING
- ☐ BLURRED OR ILLEGIBLE TEXT OR DRAWING
- ☐ SKEWED/SLANTED IMAGES
- ☐ COLOR OR BLACK AND WHITE PHOTOGRAPHS
- ☐ GRAY SCALE DOCUMENTS
- ☑ LINES OR MARKS ON ORIGINAL DOCUMENT
- ☐ REFERENCE(S) OR EXHIBIT(S) SUBMITTED ARE POOR QUALITY
- ☐ OTHER: _____

IMAGES ARE BEST AVAILABLE COPY.
As rescanning these documents will not correct the image problems checked, please do not report these problems to the IFW Image Problem Mailbox.

EXHIBIT B

IN THE UNITED STATES DISTRICT COURT
FOR THE WESTERN DISTRICT OF TEXAS
AUSTIN DIVISION

FILED
AUSTIN DIVISION
2005 JA 21 AM 11:28
WESTERN DISTRICT OF TEXAS
U.S. CLERK'S OFFICE
BY: DEPUTY

CROSSROAD SYSTEMS (TEXAS), INC.,
Plaintiff,

-vs-

Case No. A-03-CA-754-SS

DOT HILL SYSTEMS CORPORATION,
Defendant.

REPORT AND RECOMMENDATION OF THE SPECIAL MASTER REGARDING UNITED STATES PATENT NOS. 5,941,972 and 6,425,035 B2

Attached hereto is the Special Master's Report and Recommendation to United States District Judge Sam Sparks regarding the construction of claims in United States Patent Nos. 5,941,972 ("the '972 patent") and 6,425,035 B2 ("the '035 patent").

The Special Master notes that during the course of the pre-hearing and post-hearing briefing as well as the *Markman* hearing itself, the parties reached agreement on certain terms initially identified as being in dispute. For instance, the parties' stipulated definition of the claim term "native low level, block protocol," which is the same in both patents, was incorporated into their Stipulated Definitions of Claim Terms [#131], filed with the Court on August 31, 2004. Also, although Crossroads initially identified the term "remote storage devices" in the '035 patent as one of the terms requiring the Court's construction, it has apparently abandoned that position since the parties' dispute over the meaning of "remote storage devices" may be resolved by the Court's construction of the word "remote" without the need for a separate construction of the entire phrase.

Additionally, in its post-hearing briefing, Crossroads stipulated to Dot Hill's definition of the term "allow access" in both patents based on the representations of Dot Hill's counsel at the hearing and in Dot Hill's briefing that the portion of Crossroads' proposed definition which was excluded by Dot Hill's definition—"preventing unauthorized communication"—is part of the definition of the phrase, "implementing access controls," which also appears in the patents. *See*

245

Crossroads's Post-Hr'g *Markman* Br. at 8; Tr. of *Markman* Hr'g at 119:2–19; Dot Hill's Post-*Markman* Hr'g Claim Construction Br. at 22.

Proposed constructions for the remaining disputed terms are attached hereto. The parties may file written objections to the recommendations made in this report within ten (10) days from the date of their receipt of it pursuant to the Court's Order of February 23, 2004.

SIGNED this the 19th day of January 2005.

KARL BAYER
SPECIAL MASTER

Oracle-Huawei-NetApp Ex. 1024, pg. 2110

Special Master's Proposed Construction of Disputed Terms					
Actual Claims Language	Crossroads' Proposed Construction	Crossroads' Evidence	Dot Hill's Proposed Construction	Dot Hill's Evidence	Special Master's Construction
				computer through a network)." (DHS Brief Ex. 10)	
A storage router for providing virtual local storage on remote storage devices to devices, comprising: a buffer providing memory work space for the storage router; a first controller operable to connect to and interface with a first transport medium;	**Remote:** "Indirectly connected through at least one serial network transport medium that encapsulates the native low-level block protocol."	**Remote:** **Intrinsic:** '035 patent: col. 1, ll. 23-36; col. 2, ll. 1-34; col. 5, ll. 46-48; col. 5, ll. 52-57; col. 6, ll. 19-31; col. 9, ll. 26-31. **Extrinsic:** Tr. 102:14-20; Rhyne Cross, Tr. 159:17-18; Rhyne Cross, Tr. 161:7-8; Rhyne Cross, Tr. 174:14-24; Tr. 180:5-14; Mr. Erwine's Notes, Shelton Decl. ISO Crossroads' Reply, Ex. 4.	**Remote:** Indirectly connected and capable of physical separation. NOTE: This is the definition of *remote*, but since this phrase appears only in the preamble to explain the context in which the storage router is used, it is not a limitation of this claim.	**Remote:** **Intrinsic:** '035 Patent: Col. 1, lines 39-42 using the term "remote" to refer to storage which is not "local," and defining "local" as "a disk drive, tape drive, CD-ROM drive or other storage device contained within, or locally connected to the workstation." Col. 1, lines 63-67, describing storage capacity which is not local as "remote." Col. 2, line 32 "significantly remote" **Extrinsic:** *Webopedia* definition of "remote" (Last modified	**Remote:** Indirectly connected through at least one serial network transport medium.

Oracle-Huawei-NetApp Ex. 1024, pg. 2111

Special Master's Proposed Construction of Disputed Terms					
Actual Claims Language	Crossroads' Proposed Construction	Crossroads' Evidence	Dot Hill's Proposed Construction	Dot Hill's Evidence	Special Master's Construction
				September 1, 1996) as "In networks, remote refers to files, devices, and other resources that are not connected directly to your workstation. Resources at your workstation are considered local" (DHS Brief Ex. 6) *Webopedia* definition of "local" (Last modified September 1, 1996) as "In networks, local refers to files, devices, and other resources at your workstation. Resources located at other nodes on the network are remote." (DHS Brief Ex. 6) Deposition of inventor Hoese, pages 143, 146, 147, 154-155 confirming that "remote" is not a function of distance by stating "It appears to be that the intent was to describe the storage as	

Oracle-Huawei-NetApp Ex. 1024, pg. 2112

Special Master's Proposed Construction of Disputed Terms					
Actual Claims Language	Crossroads' Proposed Construction	Crossroads' Evidence	Dot Hill's Proposed Construction	Dot Hill's Evidence	Special Master's Construction
				not being directly connected as local storage would be, but to be connected remotely, as in across a network or other means." (DHS Brief Ex. 14) Deposition of inventor Russell pages 104-105 confirming that "remote" is not a function of distance by stating "And it might be right next to me or it could be, you know, across the country, but that would allow me to get at that remote storage." (DHS Brief Ex. 15) Declaration of Rhyne, paragraph 19, stating that "[T]he meaning of 'remote' in general and in the specific context of the Crossroads patents has nothing to do with the physical distance between a workstation	

Oracle-Huawei-NetApp Ex. 1024, pg. 2113

Special Master's Proposed Construction of Disputed Terms					
Actual Claims Language	Crossroads' Proposed Construction	Crossroads' Evidence	Dot Hill's Proposed Construction	Dot Hill's Evidence	Special Master's Construction
				and a storage device, but rather has to do with the topological nature of the interconnection between those devices." (DHS Responsive Brief Ex. 18) Declaration of Rhyne, paragraph 27, stating that "[T]he common meaning of 'remote' is the opposite of 'local,' and does not carry a distance characteristic." (DHS Responsive Brief Ex. 18) Declaration of Hodges in Support of Crossroads' Opening Markman Brief (7/27/04), paragraph 9, stating that "The term 'local storage' typically refers to storage devices which are directly connected to the computer (as opposed to storage devices connected to a computer through a network). Local storage also	

Oracle-Huawei-NetApp Ex. 1024, pg. 2114

Special Master's Proposed Construction of Disputed Terms					
Actual Claims Language	Crossroads' Proposed Construction	Crossroads' Evidence	Dot Hill's Proposed Construction	Dot Hill's Evidence	Special Master's Construction
				typically refers to storage devices which are located a very short distance from the computer, i.e. a few feet." (Crossroads' Brief) Markman hearing testimony of Rhyne at 15:3-15, showing that a definition of "remote" could be simply "indirectly connected." (Hearing Transcript)	
a second controller operable to connect to and interface with a second transport medium; and a **supervisor unit** coupled to the first controller, the second controller and the buffer, the **supervisor unit** operable to map between devices connected to the first transport medium and the storage devices,	**Supervisor Unit:** "A computer processing device programmed to process data in a buffer in order to map between device connected to a first transport medium and devices connected to a second transport medium which implements access controls."	**Supervisor Unit:** **Intrinsic:** '035 patent: col. 6, ll. 3-10; col. 9; ll. 22-31. **Extrinsic:** Hodges Direct, Tr. 36:3-37:9.	**Supervisor Unit:** A microprocessor programmed to process data in a buffer in order to map between devices connected to the first transport medium and storage devices and which implements access controls.	**Supervisor Unit:** **Intrinsic:** '035 Patent: Col. 5, lines 12-17, describing a Supervisor Unit that "comprises a microprocessor ..." Col. 1, lines 37-39 and col. 4, lines 39-40 equating a "computing device" with workstations. Compare '035 claims	**Supervisor Unit:** A device comprising at least: (1) a microprocessor, incorporating independent data and program memory spaces; and (2) associated logic required to implement a stand alone processing system and programmed to process data in a buffer in order to map between devices connected to a first transport medium and devices connected to a second transport medium and which implements access controls.

Oracle-Huawei-NetApp Ex. 1024, pg. 2115

ARTIFACT SHEET

Enter artifact number below. Artifact number is application number + artifact type code (see list below) + sequential letter (A, B, C ...). The first artifact folder for an artifact type receives the letter A, the second B, etc..
Examples: 59123456PA, 59123456PB, 59123456ZA, 59123456ZB

(90/007,123 CA)

Indicate quantity of a single type of artifact received but not scanned. Create individual artifact folder/box and artifact number for each Artifact Type.

☐ CD(s) containing:
- computer program listing ☐ — Doc Code: Computer — Artifact Type Code: P
- pages of specification and/or sequence listing and/or table ☐ — Doc Code: Artifact — Artifact Type Code: S
- content unspecified or combined ☐ — Doc Code: Artifact — Artifact Type Code: U

☑ Stapled Set(s) Color Documents or B/W Photographs
Doc Code: Artifact Artifact Type Code: C

☐ Microfilm(s)
Doc Code: Artifact Artifact Type Code: F

☐ Video tape(s)
Doc Code: Artifact Artifact Type Code: V

☐ Model(s)
Doc Code: Artifact Artifact Type Code: M

☐ Bound Document(s)
Doc Code: Artifact Artifact Type Code: B

☐ Confidential Information Disclosure Statement or Other Documents marked Proprietary, Trade Secrets, Subject to Protective Order, Material Submitted under MPEP 724.02, etc.
Doc Code: Artifact Artifact Type Code X

☐ Other, description: _____
Doc Code: Artifact Artifact Type Code: Z

March 8, 2004

UNITED STATES PATENT AND TRADEMARK OFFICE

UNITED STATES DEPARTMENT OF COMMERCE
United States Patent and Trademark Office
Address: COMMISSIONER FOR PATENTS
P.O. Box 1450
Alexandria, Virginia 22313-1450
www.uspto.gov

APPLICATION NO.	FILING DATE	FIRST NAMED INVENTOR	ATTORNEY DOCKET NO.	CONFIRMATION NO.
90/007,123	07/19/2004	5941972	I006-8900	2293

44654 7590 05/24/2005

SPRINKLE IP LAW GROUP
1301 W. 25TH STREET
SUITE 408
AUSTIN, TX 78705

EXAMINER	
Flemings, Fritz	
ART UNIT	PAPER NUMBER
2182	

DATE MAILED: 05/24/2005

Please find below and/or attached an Office communication concerning this application or proceeding.

PTO-90C (Rev. 10/03)

UNITED STATES DEPARTMENT OF COMMERCE
Patent and Trademark Office
Address: ASSISTANT COMMISSIONER FOR PATENTS
Washington, D.C. 20231

APPLICATION NO./ CONTROL NO.	FILING DATE	FIRST NAMED INVENTOR / PATENT IN REEXAMINATION	ATTORNEY DOCKET NO.
90/007,123	07/19/2004	5941972	I006-8900

Larry E. Severin
Wang, Hartman & Gibbs, PC
1301 Dove Street
Suite 1050
Newport Beach, CA 92660

EXAMINER
Fleming, Fritz

ART UNIT	PAPER
2182	

DATE MAILED: 05/24/05

Please find below and/or attached an Office communication concerning this application or proceeding.

Commissioner of Patents and Trademarks

CC: SPRINKLE IP LAW GROUP
1301 W. 25th Street
Suite 408
Austin, TX 78705

Oracle-Huawei-NetApp Ex. 1024, pg. 2118

Office Action in Ex Parte Reexamination	Control No. 90/007,123	Patent Under Reexamination 5,941,972	
	Examiner Fritz M. Fleming	Art Unit 2182	

-- The MAILING DATE of this communication appears on the cover sheet with the correspondence address --

a☒ Responsive to the communication(s) filed on *05 April 2005*. b☐ This action is made FINAL.
c☒ A statement under 37 CFR 1.530 has not been received from the patent owner.

A shortened statutory period for response to this action is set to expire 2 month(s) from the mailing date of this letter. Failure to respond within the period for response will result in termination of the proceeding and issuance of an *ex parte* reexamination certificate in accordance with this action. 37 CFR 1.550(d). **EXTENSIONS OF TIME ARE GOVERNED BY 37 CFR 1.550(c).** If the period for response specified above is less than thirty (30) days, a response within the statutory minimum of thirty (30) days will be considered timely.

Part I THE FOLLOWING ATTACHMENT(S) ARE PART OF THIS ACTION:

1. ☒ Notice of References Cited by Examiner, PTO-892.
2. ☒ Information Disclosure Statement, PTO-1449.
3. ☐ Interview Summary, PTO-474.
4. ☐ _____.

Part II SUMMARY OF ACTION

1a. ☒ Claims *1-14* are subject to reexamination.
1b. ☐ Claims _____ are not subject to reexamination.
2. ☐ Claims _____ have been canceled in the present reexamination proceeding.
3. ☐ Claims _____ are patentable and/or confirmed.
4. ☒ Claims *1-14* are rejected.
5. ☐ Claims _____ are objected to.
6. ☒ The drawings, filed on *7/19/2004* are acceptable.
7. ☐ The proposed drawing correction, filed on _____ has been (7a)☐ approved (7b)☐ disapproved.
8. ☐ Acknowledgment is made of the priority claim under 35 U.S.C. § 119(a)-(d) or (f).
   a)☐ All b)☐ Some* c)☐ None of the certified copies have
   1☐ been received.
   2☐ not been received.
   3☐ been filed in Application No. _____.
   4☐ been filed in reexamination Control No. _____.
   5☐ been received by the International Bureau in PCT application No. _____.
   * See the attached detailed Office action for a list of the certified copies not received.
9. ☐ Since the proceeding appears to be in condition for issuance of an *ex parte* reexamination certificate except for formal matters, prosecution as to the merits is closed in accordance with the practice under *Ex parte* Quayle, 1935 C.D. 11, 453 O.G. 213.
10. ☐ Other: _____

cc: Requester (if third party requester)

Oracle-Huawei-NetApp Ex. 1024, pg. 2119

Reexamination

1. In order to ensure full consideration of any amendments, affidavits or declarations, or other documents as evidence of patentability, such documents must be submitted in response to this Office action. Submissions after the next Office action, which is intended to be a final action, will be governed by the requirements of 37 CFR 1.116, which will be strictly enforced.

Extensions of time under 37 CFR 1.136(a) will not be permitted in these proceedings because the provisions of 37 CFR 1.136 apply only to "an applicant" and not to parties in a reexamination proceeding. Additionally, 35 U.S.C. 305 requires that reexamination proceedings "will be conducted with special dispatch" (37 CFR 1.550(a)). Extension of time in *ex parte* reexamination proceedings are provided for in 37 CFR 1.550(c).

A shortened statutory period for response to this action is set to expire **2 months from the mailing date of this letter.**

1. The patent owner is reminded of the continuing responsibility under 37 CFR 1.565(a) to apprise the Office of any litigation activity, or other prior or concurrent proceeding, involving Patent No. 5,941,972 throughout the course of this reexamination proceeding. The third party requester is also reminded of the ability to similarly apprise the Office of any such activity or proceeding throughout the course of this reexamination proceeding. See MPEP §§ 2207, 2282 and 2286.

2. Applicant's arguments with respect to claims 1-14 have been considered but are moot in view of the new ground(s) of rejection.

It is to be noted that each independent claim (i.e. 1,7,11) has the phrase "using native low level, block protocols", which per the interview for 90/007127, distinguishes over the art of record used in the first office action. However, instead of being able to close out prosecution with this action, a new non-final action is being issued. This is due to the filing of the IDS after the mailing date of the first office action. Had this information, namely the Spring (UK GB 2297636), been filed prior to the first office action, these issues would have been taken into account in the first office action. Since there was no statement similar to that of 37 CFR 1.97(e), an action based solely upon art cited by the patent owner could have been made final, even when the claims are not amended (see below). Since the art cited by the patent owner led to the discovery of other references used in this rejection, this action cannot be made final, but does certainly delay a final action on the claimed subject matter.

MPEP 2171:

III. ART CITED BY PATENT OWNER DURING PROSECUTION

Where art is submitted in a prior art citation under 37 CFR 1.501 and/or 37 CFR 1.555 (an IDS filed in a reexamination is construed as a prior art citation) and the submission is not accompanied by a statement similar to that of 37 CFR 1.97(e), the examiner may use the art submitted and make the next Office action final whether or not the claims have been amended, provided that no other new ground of rejection is introduced by the examiner based on the new art not cited in the prior art citation. See MPEP § 706.07(a).

Claim Rejections - 35 USC § 103

3. The following is a quotation of 35 U.S.C. 103(a) which forms the basis for all obviousness rejections set forth in this Office action:

> (a) A patent may not be obtained though the invention is not identically disclosed or described as set forth in section 102 of this title, if the differences between the subject matter sought to be patented and the prior art are such that the subject matter as a whole would have been obvious at the time the invention was made to a person having ordinary skill in the art to which said subject matter pertains. Patentability shall not be negatived by the manner in which the invention was made.

4. The factual inquiries set forth in *Graham* **v.** *John Deere Co.*, 383 U.S. 1, 148 USPQ 459 (1966), that are applied for establishing a background for determining obviousness under 35 U.S.C. 103(a) are summarized as follows:

1. Determining the scope and contents of the prior art.
2. Ascertaining the differences between the prior art and the claims at issue.
3. Resolving the level of ordinary skill in the pertinent art.
4. Considering objective evidence present in the application indicating obviousness or nonobviousness.

5. This application currently names joint inventors. In considering patentability of the claims under 35 U.S.C. 103(a), the examiner presumes that the subject matter of the various claims was commonly owned at the time any inventions covered therein were made absent any evidence to the contrary. Applicant is advised of the obligation under 37 CFR 1.56 to point out the inventor and invention dates of each claim that was not commonly owned at the time a later invention was made in order for the examiner to consider the applicability of 35 U.S.C. 103(c) and potential 35 U.S.C. 102(e), (f) or (g) prior art under 35 U.S.C. 103(a).

6. Claims 7-9,11-14 are rejected under 35 U.S.C. 103(a) as being unpatentable over Spring (UK GB 2297636—Spring) in view of Oeda et al. (Oeda) and Cummings.

Starting with the independent claim 7, one finds an apparatus per Figure 1 comprising a plurality of user workstations (USER 1-4 each having15-18), a corresponding plurality of first transport medium (un-numbered) connecting the USERS to the storage router (server 20), which in turn is connected to a plurality of storage

devices in the form of drives 1-5 (21-25) via a corresponding set of second transport medium (again un-numbered). Thus the storage router (server 20) interfaces between the workstations and the storage devices, as shown in detail in Figure 2, wherein the processor 28 controls the USER interface circuits 26 and the disk drive interface circuits 27. The internal memory 29 provides programmed instructions for the processor 28. The storage router (server 20) is connected to each USER via a SCSI interface, and in turn to the emulated SCSI drive (drives 21-25). See for example, pages 5-7. Thus, an apparatus for providing virtual local storage (at drives 21-25) on remote storage devices (21-25 are remote from workstations 15/16) connected to one transport medium (the non-numbered connections from the shared file server 20 to the drives 21-25) to devices (workstations 15/16, of which 4 are shown) connected to another transport medium (the un-numbered connections between the workstations 15/16 and the file server 20) is shown in Figure 1. The method of providing virtual local storage is set forth at page 3, wherein it is disclosed that a method of storing data at a large storage volume which emulates (hence makes virtual) a plurality of removable disc drives (the local storage). See also page 10, lines 1-3, wherein step 34 describes a data transfer in which the local operating software **may read and write to logical drives as if they were local removable disc drives**, thereby anticipating the virtual local storage, as the drives themselves are remote to the users, but appear to the user's as the conventional local removable disc drives, and hence virtual local storage as logical drives emulate (i.e. virtual) the removable disc drives (the local storage). Thus the storage router (server 20) interfaces with the first and second transport medium and provides the

virtual local storage to the USERS. There is a mention of a look up table (68) for each logical drive, but such is not the mapping between the workstations and storage devices as claimed, noting that USERS access logical drives. The implementing of access controls is clearly described throughout the disclosure, especially noting that each USER has access to a large number of removable disc drives (see page 7, lines 18-27), thereby teaching the implementation of some sort of access controls, with the storage router (server 20) determining if the requested drive is available, and if so, granting access to the requesting workstation (see page 8, lines 10-17). Thus the access is ultimately controlled and allowed by the storage router (server 20). All of this is done by native low level, block protocol (NLLBP), as the only protocol used from the USERs to the storage router and by the storage router (server 20) is that of the SCSI protocol, such being selected so that the storage router (server 20) will return data back to the USER via the SCSI protocol (page 8, lines 10-17), as the processor 15 (of a USER) issues commands over the SCSI interface (page 8 lines 4-9). Per page 12, lines 14-26, the local operating system of the USER (62) thinks it is accessing a conventional SCSI drive via communications over a conventional SCSI interface to the storage router SCSI interface (65), wherein the communication conforms to establish SCSI protocols without having to embed network software within the workstations. Furthermore, the server operating system (66) converts the SCSI sector definitions into physical data blocks for each logical drive, such that the server operating system (60) emulates an SCSI disc drive per Figure 5. Finally note that the storage router (server 20) grants access to an emulated logical disc drive (page 9, lines 17-19) via mount and dismount commands

(pages 9 and 10) and that the storage router (server 20) has to keep track of user created blocks, such that the USER is presented with a user interface allowing existing logical drives to be selected as well as new logical drives to be defined (page 12, lines 9-13), all via the use of the SCSI NLLBP. Communications between the USERS and the storage router (server 20) is implemented using established protocols, preferred to be SCSI, which is in turn, the claimed use of the NLLBP, as this is used from the USER to the storage router to the disc drives. While look up tables and keeping track of USER blocks is mentioned, this does not set forth a mapping between the workstations and the storage devices, noting that Spring is using logical drives for the USERs.

In the same field of endeavor, Oeda et al. (Oeda) teaches that it is old and well known per Figure 4 to have a plurality of HOSTs (i.e. 1A,B) connected to a SCSI bus (2), which is then in turn connected to a disk controller (5) and a disk drive unit (4). Per Figure 4, it is clearly shown that the disk drive (4) is divided into subsets mapped to the HOSTs, wherein HOST 1A is only allowed to access its partition (41), HOST 1B is only allowed to access its partition (42), and either HOST is granted a shared read only access to the shared partition (43). The partitions (41-43) are assigned to the HOSTs as is shown, with the purpose of the assigned partitions avoiding erroneous partition access and data destruction (column 7, line 53-column 8, line 30). Thus a mapping between workstations (in the form of HOSTs) and the assigned partitions (41-43) is clearly shown, such that a HOST 1A can only request partitions 41 and 43 (the implementing of storage area access controls), and is prevented from erroneously accessing the Host 1B partition 42 (see column 8, lines 13-16), which is the ultimate

allowing of access to only those partitions of the storage area for which access control has been mapped. Furthermore, the disk controller (5 and functioning as a storage router) performs exclusive control between the HOSTs and the drive per Figure 2, wherein the SCSI CONTROL LSI has the ID REGISTERS (71-73) which contains the DEVICE IDs and thus compares the requested device ID by a HOST to the stored IDs and grants or denies access based upon the mapping of Figure 4. Since each partition has a SCSI ID, each partition is a seen as a logical drive (and can be assigned different logical unit numbers – LUNs – column 6, lines 34-37), as the HOST sees three separate disk storage devices. The protocol used is that of the SCSI standard, with the 7 phases set forth at column 5, again showing that access from the HOSTs to the storage router (i.e. the disk controller 5 as it performs the mapping, access controls, and granting of access) to the disk drive unit (4) is exclusively SCSI, thus exhibiting the use of a NLLBP as claimed.

In the same field of endeavor, Cummings teaches the use of a fibre channel based system architecture to provide the transport mechanism for multiple user station access to the "Disk array and tape library" using the same protocols (i.e. SCSI) as if they were connected to the user's local workstation. See Figure 2 and pages 253-254. Thus virtual local storage is provided by a remote disk array and this array is accessed by the same SCSI protocol as though it were locally connected. Therefore, it is clear that SCSI, a NLLBP, is used from end to end, as fibre channel has SCSI protocol, as well as others, mapped to it (page 253). Advantages gained are the use of a single channel, a distance independent transport mechanism, and remote storage that is

indistinguishable from the local disk storage (page 254). Since access is via SCSI protocol, it is thus obvious that the "Disk array with storage manager" of Figure 2 requires a fibre channel controller interface to interface with the fibre channel leading to it, as well as a SCSI interface for the array, as the array is accessed with the SCSI protocol. But at the top level, Cummings clearly shows a fibre channel transport medium that is used to interface the user workstations to the "disk array with storage manager" and that the "disk array with storage manager" is SCSI based as that is the protocol used to access it. Note also that the concept of private and shared storage are mentioned at page 255, thereby setting forth motivation to combine with references that teach SCSI based private and shared storage.

Therefore it would have been obvious to one having ordinary skill in the art at the time that the invention was made to modify Spring 636 in view of Oeda and Cummings for the express purpose of providing a plurality of USERs/HOSTs mapped and controlled access to assigned partitions in order to avoid erroneous disk access and data destruction in a distance independent fibre channel based transport medium carrying the end to end SCSI protocol NLLBP. It is to be noted that this combination is expressly taught by Spring '636 at page 7, lines 3-17, in that more robust connections may be needed in order to provide for greater separation from the users to the disks. Thus the use of the fibre channel transport medium of Cummings teaches the use of the fibre channel to carry the SCSI based protocol functionality of Spring '636 and Oeda such that the virtual local storage can be separated from the users by a greater distance than achieved by SCSI alone, without changing the use of the SCSI protocol (end to

end) and making the disk storage array appear exactly as if it were locally connected. In combination, each USER/HOST is granted access to only its subset partition (i.e. logical disk) to which it is mapped. The USERs are a plurality of workstations, and the storage devices are a plurality of disc drives, noting that Oeda supports an array of drives (17) divided into partitions (171-173) such that it performs as a RAID, as does SPRING '636, with each device seen by a HOST independent from one another (Oeda columns 6 and 7). Thus when combined, the plurality of disc drives are divided into partitions mapped to specific USERs/HOSTs, so that access is controlled and granted via the mapping, performed by the storage router (the combined server 20 and disk controller 5). The claims only require fibre channel and SCSI bus transport medium and interfacing thereto, which the combined references teach. The indicated claims require only the top-level interfacing and require no details of the fibre channel or SCSI controllers. Thus the SCSI storage devices are accessed in a mapped and access controlled manner via the SCSI that is carried over the fibre channel transport medium, and the interfacing will occur at the disk array with storage manner, which would be the server (20) of Spring '636 and the disk controller (5) of Oeda, such that the user devices (i.e. HOSTs) on the fibre channel will be mapped to the appropriate SCSI partitions on the disk array using the SCSI protocol carried over the fibre channel bus transport medium. The user workstations are the initiators on the fibre channel bus transport medium.

As far as claims 11-14 are concerned, the method limitations are rendered obvious by the combined teachings of Spring '636 in view of Oeda and Cummings.

Combined, Spring '636 in view of Oeda and Cummings set forth the method by which the fibre channel USERs/HOSTs are interfaced with the SCSI disk drives (storage) such that the storage router (the combined teachings of the server 20 and the disk controller 5) provides the claimed mapping, implementing of the access controls, and the allowing access using only the SCSI protocol, which is a NLLBP, via the fibre channel transport medium, which requires an interfacing to the fibre channel and SCSI transport medium at the "disk array with storage manager."

7. Claims 1-6 and 10 are rejected under 35 U.S.C. 103(a) as being unpatentable over Spring '636 in view of Oeda and Cummings as applied to claims 7-9 and 11-14 above, and further in view of Jibbe et al. (Jibbe) and Crouse et al. (Crouse).

Spring '636 in view of Oeda and Cummings set forth the use of a storage router to provide mapping, access control and access granting of fibre channel USER/HOST requests to the SCSI storage disks. Per Spring '636, the server (20) has interfaces (26,27), a CPU (28) connected to the interfaces, and a memory for CPU instructions (29), using SCSI protocol (a NLLBP) end to end. See Figure 2. Per Oeda, the disk controller (5) provides mapping and access control and granting based upon the SCSI CONTROL LSI (6) and the ID REGISTERS (71-73) from the HOSTs (1A,B) to the disk(s) (either 4 or the array17) using the SCSI protocol (a NLLBP) end to end. Per Cummings, it is taught to use the distance independent fibre channel transport medium to carry the end-to-end SCSI protocol user to remote storage requests as though the storage were locally connected. What is lacking is the specific detail of the fibre channel HOST to SCSI DISK controller.

In the same field of endeavor, Jibbe teaches that it is old and well known to use a SCSI-SCSI controller for HOST to disk array access. See for example, Figure 1, which sets forth the use of a microprocessor (51) coupled to the HOST SCSI interface controller 14 and the SCSI disk drive interface controllers (31-35), such that the microprocessor controls the interfaces (column 4, lines 1-9). The SCSI Array Data Path Chip (ADP 10) interconnects the SCSI data bus (16) with the SCSI data busses (21-25), and is also under the control of the microprocessor controller (51). The DMA FIFO BLOCK 70 holds data received from the host until the array is ready to accept it and to hold data from the disk array until the host is ready to accept it (column 5, lines 14-21). The DMA interface (14) is coupled to the FIFO (70) as well as the first protocol unit (SCSI adapter 14), such that the HOST SCSI adapter (i.e. a first controller) is operable to pull data from and place data into the FIFO (70), with the second controllers (SCSI interfaces 31-35) operable to pull data from and place data into the FIFO (70), under the control of the supervisory unit (microprocessor 51) and its bus (53) that couples it to the interface controllers (14 and 31-35). The memory (36) is a 64kByte SRAM that provides memory workspace during read/modify/write operations of RAID 5 and is also coupled to the microprocessor/supervisor (51) via the ADP (10). Thus the memory (36) and the FIFO (70) provide memory work space for the array controller and allows the microprocessor/supervisor (51) to process data stored therein to allow a HOST to interface with the disk storage. In summary, Jibbe teaches a supervisor unit 51 coupled to first and second controllers (14 and 31-35), an ADP (10) and buffers (36 and 70), such that the supervisory unit controls the controllers and buffers and the ADP for the

express purpose of configurability between RAID 1,3-5 levels, as well as the use of the FIFO buffers for holding data until the host/disk drives are ready. The Host DMA interface (14) is coupled to the SCSI controller (14) and the FIFO buffers/queues (70/101-105) and the buffer (36—internal to the Figure 1 disk array controller). . It is also expressly taught that the data path architecture can be constructed with ESDI, IPI or EISA devices rather than with SCSI devices (column 11, lines 40-43).

Building on Jibbe's express suggestion to construct the data path architecture with devices other than SCSI, one finds that Crouse teaches a data server that uses a fibre channel user node transport bus medium (12b) and SCSI storage devices (46 and 48) that encompass both online and removable. Note the use of DMA and buffers in Figure 4a/b. The goal is improved data transfer architecture (column 3, lines 23-41) via a pipelined data server, to include removable and online storage devices.

Therefore it would have been obvious to one having ordinary skill in the art at the time that the invention was made to modify Spring '636 in view of Oeda by the teachings of Jibbe in order to provide for increased RAID functionality via the SCSI disk array controller details, which in turn provide for configurability between various RAID levels (certainly desirable as both Spring '636 and Oeda are concerned with various RAID levels), as well as the ability to buffer data until the host/disks are ready. The combination is proper as Spring '636 and Oeda use SCSI controllers between the host and disk(s) and RAID configurations. Spring '636 even lays out the same basic functionality as Jibbe's array controller in the storage router (server 20), with the required ability to interface with the host and disks via the SCSI protocol. Oeda also

provides host to disk interfacing with mapping, access control and access granting in a SCSI protocol environment. It is also to be noted that claims 5 and 6 each depend from claim 1, and thus the single DMA interface of Jibbe that is coupled to the SCSI controller (14) and the disk drive controllers (31-35) meets the claims, because at most, only one DMA interface is needed at a time via the claim structure. Thus Jibbe provides the details of a SCSI disk array controller needed by Spring '636 and Oeda, and the combined teachings of Spring '636 and Oeda and Jibbe render the claims obvious per the above analysis. Admissions made into the record of 90/007,127 by the patent owner bolster an obviousness rejection, as at page 10 of the response dated 4/6/2005, the record clearly states that various protocol (not even mentioned in the specification, but only appearing in the claims) represent protocols that **CAN** encapsulate SCSI commands, would be understood by those in the art. Thus this admission, coupled with Spring '636 desire to use a more robust protocol when extending the distance between the workstations and the disk drive storage and Cummings' teaching that fibre channel is distance independent and Jibbe's express teaching that other devices than SCSI can be used and Crouse's teaching of a fibre channel to SCSI data server, then the claimed subject matter is rendered obvious and is certainly within the ordinary skill in the art, and the references themselves express a motivation for the combination of references, thereby avoiding the issue of impermissible hindsight.

Any inquiry concerning this communication or earlier communications from the examiner should be directed to Fritz M. Fleming whose telephone number is 571-272-4145. The examiner can normally be reached on M-F, 0600-1500.

If attempts to reach the examiner by telephone are unsuccessful, the examiner's supervisor, Jeffrey Gaffin can be reached on 571-272-4146. The fax phone number for the organization where this application or proceeding is assigned is 703-872-9306. Any fax should be directed to the CRU at 571-273-0100

Information regarding the status of an application may be obtained from the Patent Application Information Retrieval (PAIR) system. Status information for published applications may be obtained from either Private PAIR or Public PAIR. Status information for unpublished applications is available through Private PAIR only. For more information about the PAIR system, see http://pair-direct.uspto.gov. Should you have questions on access to the Private PAIR system, contact the Electronic Business Center (EBC) at 866-217-9197 (toll-free).

Fritz M Fleming
Primary Examiner
Art Unit 2182

fmf

PINCHUS M. LAUFER, PH.D
SPECIAL PROGRAM EXAMINER
TECHNOLOGY CENTER 2100

- PROCEDURAL MATTERS

JEFFREY GAFFIN
SUPERVISORY PATENT EXAMINER
TECHNOLOGY CENTER 2100

IN THE UNITED STATES PATENT AND TRADEMARK OFFICE	
INFORMATION DISCLOSURE STATEMENT BY APPLICANTS	Atty. Docket No. (Opt.) **CROSS1120-14**

Applicant **Geoffrey B. Hoese, et al.**	
Application Number **90/007,123**	Date Filed **07/19/2004**
Title **STORAGE ROUTER AND METHOD FOR PROVIDING VIRTUAL LOCAL STORAGE**	
Group Art Unit **2182**	Examiner **Fleming, Fritz**
Confirmation Number: **2293**	

Commissioner for Patents
P.O. Box 1450
Alexandria, VA 22313

Certification Under 37 C.F.R. §1.8

I hereby certify that this document is being deposited with the United States Postal Service as First Class Mail in an envelope addressed to: Commissioner for Patents, P.O. Box 1450, Alexandria, VA 22313 on **March 24, 2005.**

Janice Pampell

Janice Pampell

Applicants respectfully request, pursuant to 37 C.F.R. §§ 1.555, 1.56, 1.97 and 1.98, that the art listed on the attached SBO8-A and SBO8-B forms be considered and cited in the examination of the above-identified reexamination application. Since the present Application was filed after June 30, 2003, a copy of any U.S. Patent and any U.S. Patent Application Publications cited on the attached SBO8-A form is not being submitted with this Information Disclosure Statement pursuant to the waiver of 37 C.F.R. § 1.98(a)(2)(i) by the U.S. Patent and Trademark Office. Several documents are included on the enclosed CD-Rom for the convenience of the Examiner. If the Examiner would like hard copies of these documents, we will gladly provide them.

Furthermore, pursuant to 37 C.F.R. §§ 1.97(g) and (h), no representation is made that a search has been made or that this art is material to patentability of the present application. Applicants respectfully submit that the claims of Applicants' above-referenced patent is patentably distinguishable from these references. Applicants respectfully request consideration of these references. The Commissioner is hereby authorized to charge any fees due, or refund any credit, to Deposit Account No. 50-3183 of Sprinkle IP Law Group for any fee under 37 C.F.R. §1.17.

Respectfully submitted,
Sprinkle IP Law Group
Attorneys for Applicants

John L. Adair
Reg. No. 48,828

Dated: March 24, 2005
1301 W. 25th Street, Suite 408
Austin, TX 78705
T. 512-637-9220 / F. 512-371-9088

PTO/SB/08A (04-03)

INFORMATION DISCLOSURE STATEMENT BY APPLICANT				Application Number	09/007,123
				Filing Date	07/19/2004
				First Named Inventor	Hoese, Geoffrey
				Group Art Unit	2182
				Examiner Name	Fleming, Fritz M.
Sheet	1	OF	3	Attorney Docket Number	CROSS1120-14

U.S. PATENT DOCUMENTS

Examiner Initials	Cite No.	Document Number		Publication Date MM-DD-YYYY	Name of Patentee or Applicant of Cited Document	Pages, Columns, Lines Where Relevant Passages or Figures Appear
		Number	Kind Code (if known)			
FM=	A1	3,082,406		03/19/1963	L.D. Stevens	
	A2	4,092,732		05/30/1978	Ouchi	
	A3	4,695,948		09/22/1987	Blevins, et al.	
	A4	4,751,635		06/14/1988	Kret	
	A5	4,864,532		09/05/1989	Reeve, et al.	
	A6	4,947,367		08/07/1990	Chang, et al.	
	A7	5,072,378		12/10/1991	Manka	
	A8	5,163,131		11/10/1992	Row, et al.	
	A9	5,239,632		08/24/1993	Larner	
	A10	5,239,643		08/24/1993	Blount, et al.	
	A11	5,257,386		10/26/1993	Saito	
	A12	5,347,384		09/13/1994	McReynolds, et al.	
	A13	5,414,820		10/09/1995	McFarland, et al.	
	A14	5,423,044		06/06/1995	Sutton, et al.	
	A15	5,465,382		11/07/1995	Day, III, et al.	
	A16	5,530,845		06/25/1996	Hiatt, et al.	
	A17	5,535,352		07/09/1996	Bridges, et al.	
	A18	5,581,714		12/03/1996	Amini, et al.	
	A19	5,596,562		06/21/1997	Chen	
	A20	5,596,736		01/21/1997	Kerns	
	A21	5,598,541		01/28/1997	Malladi	
	A22	5,680,556		10/21/1997	Begun, et al.	
	A23	5,701,491		12/23/1997	Dunn, et al.	
	A24	5,712,976		01/27/1998	Falcon, et al.	
	A25	5,729,705		03/17/1998	Weber	
	A26	5,743,847		04/28/1998	Nakamura, et al.	
	A27	5,751,975		05/12/1998	Gillespie, et al.	
	A28	5,774,683		06/30/1998	Gulick	
	A29	5,845,107		12/01/1998	Fisch, et al.	
	A30	5,857,080		10/05/1999	Jander, et al.	
	A31	5,864,653		01/26/1999	Tavallaei, et al.	
FM=	A32	5,867,648		02/02/1999	Foth, et al.	

INFORMATION DISCLOSURE STATEMENT BY APPLICANT				Application Number	09/007,123
				Filing Date	07/19/2004
				First Named Inventor	Hoese, Geoffrey
				Group Art Unit	2182
				Examiner Name	Fleming, Fritz M.
Sheet	2	OF	3	Attorney Docket Number	CROSS1120-14

U.S. PATENT DOCUMENTS

Examiner Initials	Cite No.	Document Number		Publication Date MM-DD-YYYY	Name of Patentee or Applicant of Cited Document	Pages, Columns, Lines Where Relevant Passages or Figures Appear
		Number	Kind Code *(if known)*			
FMF	A33	5,884,027		03/16/1999	Garbus, et al.	
	A34	5,913,045		06/15/1999	Gillespie, et al.	
	A35	5,923,557		07/13/1999	Eidson	
	A36	5,941,969		08/24/1999	Ram, et al.	
	A37	5,941,972		08/24/1999	Hoese, et al.	
	A38	5,953,511		09/14/1999	Sescilia, et al.	
	A39	5,959,994		09/28/1999	Boggs, et al.	
	A40	5,974,530		10/26/1999	Young	
	A41	5,978,379		11/02/1999	Chan, et al.	
	A42	5,991,797		11/23/1999	Futral, et al.	
	A43	6,000,020		12/07/1999	Chin, et al.	
	A44	6,021,451		02/01/2000	Bell, et al.	
	A45	6,041,381		03/21/2000	Hoese	
	A46	6,065,087		05/16/2000	Keaveny, et al.	
	A47	6,070,253		01/26/1999	Tavallaei, et al.	
	A48	6,075,863		06/13/2000	Krishnan, et al.	
	A49	6,118,766		09/12/2000	Akers	
	A50	6,131,119		10/10/2000	Fukui	
	A51	6,134,617		10/17/2000	Weber	
	A52	6,141,737		10/31/2000	Krantz, et al.	
	A53	6,145,006		11/07/2000	Vishlitsky, et al.	
	A54	6,148,004		11/14/2000	Nelson, et al.	
	A55	6,209,023		03/27/2001	Dimitroff, et al.	
	A56	6,223,266		04/24/2001	Sartore	
	A57	6,230,218		05/08/2001	Casper, et al.	
	A58	6,260,120		07/10/2001	Blumenau, et al.	
	A59	6,330,629		12/11/2001	Kondo et al.	
	A60	6,341,315		01/22/2002	Arroyo, et al.	
	A61	6,343,324		01/29/2002	Hubis, et al.	
	A62	6,363,462		03/26/2002	Bergsten	
	A63	6,421,753		07/16/2002	Hoese, et al.	
	A64	6,425,035		07/23/2002	Hoese, et al.	
FMF	A65	6,425,036		07/23/2002	Hoese, et al.	

INFORMATION DISCLOSURE STATEMENT BY APPLICANT				Application Number	09/007,123
				Filing Date	07/19/2004
				First Named Inventor	Hoese, Geoffrey
				Group Art Unit	2182
				Examiner Name	Fleming, Fritz M.
Sheet	3	OF	3	Attorney Docket Number	CROSS1120-14

U.S. PATENT DOCUMENTS

Examiner Initials	Cite No.	Document Number		Publication Date MM-DD-YYYY	Name of Patentee or Applicant of Cited Document	Pages, Columns, Lines Where Relevant Passages or Figures Appear
		Number	Kind Code (if known)			
FMF	A66	6,484,245		11/19/2002	Sanada, et al.	
FMF	A67	6,529,996		03/04/2003	Nguyen, et al.	

Examiner Initials		FOREIGN PATENT DOCUMENTS			Publication Date MM-DD-YYYY (Number 43)	Name of Patentee or Applicant of Cited Document	Pages, Columns, Lines Where Relevant Passages or Figures Appear
		Country Code	Number	Kind Code (if known)			
FMF	B1	GB	2296798	A	07/10/1996	Spring Consultants Limited	
	B2	GB	2297636	A	08/07/1996	Spring Consultants Limited	
	B3	JP	8-230895		09/10/1996	Kikuchi, et al.	
	B4	EP	0810530	A2	12/03/1997	Sun Microsystems, Inc.	
	B5	EP	0827059	A2	03/04/1998	NEC Corporation	
	B6	WO	99/34297	A1	07/08/1999	Crossroads Systems, Inc.	
	B7	GB	2341715				
	B8	JP	6301607				
FMF	B9	WO	98/36357		1998		

Examiner Signature	Ftzm. Fleming	Date Considered	5/23/2005

FRITZ FLEMING
PRIMARY EXAMINER
GROUP 2100

FORM PTO 1449 US Department of Commerce Patent and Trademark Office				Application Number	90/007,123
				Filing Date	07/19/04
				First Named Inventor	Hoese, Geoffrey
				Group Art Unit	2182
				Examiner Name	Fleming, Fritz M.
Sheet	1	of	6	Atty Docket Number	CROSS1120-14

Examiner Initials	Cite No.	OTHER PRIOR ART -- NON PATENT LITERATURE DOCUMENTS	Date
FMF	C1	Black Box, SCSI Fiberoptic Extender, Single-Ended, Product Insert, 2 pages, 1996.	6/18/05
	C2	Block-Based Distributed File Systems, Anthony J. McGregor, July 1997.	
	C3	Compaq Storageworks HSG80 Array Controller ACS Version 8.3 (Maintenance and Service Guide) 11/98	
	C4	Compaq Storageworks HSG80 Array Controller ACS Version 8.3 (Configuration and CLI Reference Guide) 11/98	
	C5	CRD-5500, RAID DISK ARRAY CONTROLLER Product Insert, pp. 1-5	
	C6	CRD-5500, SCSI RAID CONTROLLER OEM Manual, Rev. 1.3, February 26, 1996, pp. 1-54.	02/26/1996
	C7	CRD-5500, SCSI RAID Controller User's Manual CMD Technology, Inc. pp. 1-1 to 6-25, revised November 21, 1996	11/21/1996
	C8	DIGITAL StorageWorks, HSZ70 Array Controller, HSOF Version 7.0 EK-HSZ70-CG. A01, Digital Equipment Corporation, Maynard, Massachusetts.	
	C9	DIGITAL StorageWorks, Using Your HSZ70 Array Controller in a SCSI Controller Shelf (DS-BA356-M Series), User's Guide, pp. 1-1 through A-5 with index, January 1998.	01/01/1998
	C10	DIGITAL Storageworks HSG80 Array Controller ACS Version 8.0 (User's Guide) 1/98	
	C11	DIGITAL StorageWorks HSZ70 Array Controller HSOF Version 7.0 EK-HSZ70-SV. A01	
	C12	DIGITAL StorageWorks HSZ70 Array Controller HSOF Version 7.0 EK-HSZ70-RM.A01 CLI Reference Manual	
	C13	DP5380 Asynchronous SCSI Interface, National Semiconductor Corporation, Arlington, TX, May 1989, pp. 1-32	
	C14	Emerson, "Ancor Communications: Performance evaluation of switched fibre channel I/O system using--FCP for SCSI" February 1995, IEEE, pp. 479-484.	02/01/1995
	C15	IBM Technical Publication: Guide to Sharing and Partitioning IBM Tape Library Dataservers, November 1996, IBM, International Technical Support Organization, San Jose Center	11/01/1996
	C16	IBM Technical Publication: Magstar and IBM 3590 High Performance Tape Subsystem Technical Guide, November 1996, pp. 1-269.	11/01/1996
	C17	InfoServer 150VXT Photograph	
	C18	Infoserver 100 System Operations Guide, First Edition Digital Equipment Corporation, 1990	
FMF2	C19	"InfoServer 150--Installation and Owner's Guide", EK-INFSV-OM-001, Digital Equipment Corporation, Maynard, Massachusetts 1991, Chapters 1 and 2	

FORM PTO 1449 US Department of Commerce Patent and Trademark Office				Application Number	90/007,123
				Filing Date	07/19/2004
				First Named Inventor	Hoese, Geoffrey
				Group Art Unit	2182
				Examiner Name	Fleming, Fritz M.
Sheet	2	of	6	Atty Docket Number	CROSS1120-14

Examiner Initials	Cite No.	OTHER PRIOR ART – NON PATENT LITERATURE DOCUMENTS	Date
FMF	C20	Johnson, D.B., et al., The Peregrine High Performance RPC System", Software-Practice and Experience, 23(2):201-221, Feb. 1993	
	C21	S.P. Joshi, "Ethernet controller chip interfaces with variety of 16-bit processors," electronic Design, Hayden Publishing Co., Inc., Rochelle Partk, NJ, October 14, 1982. pp 193-200	
	C22	Misc. Reference Manual Pages, SunOS 5.09.	
	C23	Pictures of internal components of the InfoServer 150, taken from http://bindarydinosaurs.couk/Museum/Digital/infoserver/infoserver.php in Nov. 2004.	
	C24	Raidtec FibreArray and Raidtec FlexArray UltraRAID Systems", Windows IT PRO Article, October 1997.	
	C25	"Simplest Migration to Fibre Channel Technology" Article, Digital Equipment Corporation, November 10, 1997, published on PR Newswire	11/10/1997
	C26	Office Action dated 01/21/03 for 10/174,720 (CROSS1120-8).	01/21/03
	C27	Office Action dated 02/27/01 for 09/354,682 (CROSS1120-1).	02/27/01
	C28	Office Action dated 08/11/00 for 09/354,682 (CROSS1120-1).	08/11/00
	C29	Office Action dated 12/16/99 for 09/354,682 (CROSS1120-1).	12/16/1999
	C30	Office Action dated 11/06/02 for 10/023,786 (CROSS1120-4).	11/06/2002
	C31	Office Action dated 01/21/03 for 10/081,110 (CROSS1120-5).	01/21/2003
	C32	Office Action dated 1/27/2005 in 10/658,163 (CROSS1120-13).	01/27/2005
	C33	Office Action in Ex Parte Reexamination 90/007,127, mailed 02/07/05.	02/07/2005
	C34	Office Action in Ex Parte Reexamination 90/007,126, mailed 02/07/05.	02/07/2005
	C35	Office Action in Ex Parte Reexamination 90/007,125, mailed 02/07/05.	02/07/2005
	C36	Office Action in Ex Parte Reexamination 90/007,124, mailed 02/07/05.	02/07/2005
	C37	Office Action in Ex Parte Reexamination 90/007,123, mailed 02/07/05.	02/07/2005
	C38	European Office Action issued April 1, 2004 in Application No. 98966104.6-2413	04/01/2004
		Copies of the following are on the attached CD-Rom	
	C39	Defendant's First Supplemental Trial Exhibit List, Crossroads Systems, Inc., v. Chaparral Network Storage, Inc., C.A. No. A-00CA-217-SS (W.D. Tex. 2001). **(CD-Rom)**.	
	C40	Defendant's Third Supplemental Trial Exhibit List, Crossroads Systems, Inc. v. Pathlight Technology, Inc., C.A. No. A-00CA-248-SS (W.D. Tex. 2001) **(CD-Rom)**.	
	C41	Defendant's Trial Exhibits, Crossroads Systems, Inc. v. Pathlight Technology, Inc., C.A. No. A-00CA-248-SS (W.D. Tex. 2001). **(CD-Rom)**.	
	C42	Defendants' Trial Exhibits, Crossroads Systems, Inc., v. Chaparral Network Storage, Inc., C.A. No. A-00CA-217-SS (W.D. Tex. 2001). **(CD-Rom)**.	
FMF	C43	Defendant Chaparral Network Storage, Inc.'s First Supplemental Trial Exhibit List (D1 through D271) (**CD-ROM** Chaparral Exhibits ExList_Def).	9/2/2001

FORM PTO 1449 US Department of Commerce Patent and Trademark Office				Application Number	90/007,123
				Filing Date	07/19/2004
				First Named Inventor	Hoese, Geoffrey
				Group Art Unit	2182
				Examiner Name	Fleming, Fritz M.
Sheet	3	of	6	Atty Docket Number	CROSS1120-14

Examiner Initials	Cite No.	OTHER PRIOR ART – NON PATENT LITERATURE DOCUMENTS	Date
FMF	C44	Defendant Pathlight Technology Inc.'s Third Supplemental Trial Exhibit List (CD-ROM Pathlight Exhibits ExList_Def).	
	C45	Plaintiff's Fourth Amended Trial Exhibit List, Crossroads Systems, Inc. v. Chaparral Network Storage, Inc, C.A. No. A-00CA-217-SS (W.D. Tex. 2001) **(CD-Rom)**.	9/11/2001
	C46	Plaintiff's Revised Trial Exhibit List, Crossroads Systems, Inc. v. Pathlight Technology, Inc., C.A. No. A-00CA-248-SS (W.D. Tex. 2001). **(CD-Rom)**.	
	C47	Plaintiff's Trial Exhibits, Crossroads Systems, Inc. v. Chaparral Networks Storage, Inc., C.A. No. A-00CA-217-SS (W.D. Tex. 2001). **(CD-Rom)**.	
	C48	Plaintiff's Fourth Amended Trial Exhibit List (**CD-ROM** Chaparral Exhibits ExList_Plaintiff).	9/11/2001
	C49	Plaintiff's Revised Trial Exhibit List (**CD-ROM** Pathlight Exhibits ExList_Plaintiff).	
	C50	Trial Transcripts, Crossroads Systems, Inc. v. Chaparral Network Storage, Inc., C.A. No. A-00CA-217-SS (W.D. Tex. 2001) **(CD-Rom)**.	
	C51	Trial Transcripts, Crossroads Systems, Inc. v. Pathlight Technology, Inc., C.A. No. A-00CA-248-SS (W.D. Tex. 2001). **(CD-Rom)**.	
	C52	Trial Exhibits and Transcripts, Crossroads v. Chaparral, Civil Action No. A-00CA-21755, W.D. Tex. 2000 (**CD-Rom** and hard copy printouts).	
	C53	Snively, "Sun Microsystem Computer Corporation: Implementing a fibre optic channel SCSI transport" 1994 IEEE, February 28, 1994, pp. 78-82.	02/28/1994
	C54	Datasheet for CrossPoint 4100 Fibre Channel to SCSI Router (Dedek Ex 41 (ANCT 117-120)) (**CD-ROM** Chaparral Exhibits D012).	
	C55	Symbios Logic- Software Interface Specification Series 3 SCSI RAID Controller Software Release 02.xx (Engelbrecht Ex 2 (LSI 1421-1658)) (**CD-ROM** Chaparral Exhibits D013).	12/3/1997
	C56	Press Release- Symbios Logic to Demonstrate Strong Support for Fibre Channel at Fall Comdex (Engelbrecht 12 (LSI 2785-86)) (**CD-ROM** Chaparral Exhibits D016).	11/13/1996
	C57	OEM Datasheet on the 3701 Controller (Engelbrecht 13 (LSI 01837-38)) (**CD-ROM** Chaparral Exhibits D017).	6/17/1905
	C58	Nondisclosure Agreement Between Adaptec and Crossroads Dated 10/17/96 (Quisenberry Ex 25 (CRDS 8196)) (**CD-ROM** Chaparral Exhibits D020).	10/17/1996
	C59	Organizational Presentation on the External Storage Group (Lavan Ex 1 (CNS 182242-255)) (**CD-ROM** Chaparral Exhibits D021).	4/11/1996
	C60	Bridge. C, Bridge Between SCSI-2 and SCSI-3 FCP (Fibre Channel Protocol) (**CD-ROM** Chaparral Exhibits P214).	
	C61	Bridge Phase II Architecture Presentation (Lavan Ex 2 (CNS 182287-295)) (**CD-ROM** Chaparral Exhibits D022).	4/12/1996
FMF	C62	Attendees/Action Items from 4/12/96 Meeting at BTC (Lavan Ex 3 (CNS 182241)) (**CD-ROM** Chaparral Exhibits D023).	4/12/1996

FORM PTO 1449 US Department of Commerce Patent and Trademark Office				Application Number	90/007,123
				Filing Date	07/19/2004
				First Named Inventor	Hoese, Geoffrey
				Group Art Unit	2182
				Examiner Name	Fleming, Fritz M.
Sheet	4	of	6	Atty Docket Number	CROSS1120-14

Examiner Initials	Cite No.	OTHER PRIOR ART – NON PATENT LITERATURE DOCUMENTS	Date
FMF	C63	Brooklyn Hardware Engineering Requirements Documents, Revision 1.4 (Lavan Ex 4 (CNS 178188-211)) (**CD-ROM** Chaparral Exhibits D024) by Pecone.	5/26/1996
	C64	Brooklyn Single-Ended SCSI RAID Bridge Controller Hardware OEM Manual, Revision 2.1 (Lavan EX 5 (CNS 177169-191)) (**CD-ROM** Chaparral Exhibits D025).	3/21/1996
	C65	Coronado Hardware Engineering Requirements Document, Revision 0.0 (Lavan Ex 7 (CNS 176917-932)) (**CD-ROM** Chaparral Exhibits D027) by O'Dell.	9/30/1996
	C66	ESS/FPG Organization (Lavan Ex 8 (CNS 178639-652)) (**CD-ROM** Chaparral Exhibits D028).	12/6/1996
	C67	Adaptec MCS ESS Presents: Intelligent External I/O Raid Controllers "Bridge" Strategy (Lavan Ex 9 (CNS 178606-638)). (**CD-ROM** Chaparral Exhibits D029).	2/6/1996
	C68	AEC-7313 Fibre Channel Daughter Board (for Brooklyn) Engineering Specification, Revision 1.0 (Lavan Ex 10 (CNS 176830-850)) (**CD-ROM** Chaparral Exhibits D030).	2/27/1997
	C69	Bill of Material (Lavan Ex 14 (CNS 177211-214)) (**CD-ROM** Chaparral Exhibits D034).	7/24/1997
	C70	AEC-. 4412B, AEC-7412/B2 External RAID Controller Hardware 0EM Manual, Revision 2.0 (Lavan Ex 15 (CNS 177082-123)) (**CD-ROM** Chaparral Exhibits D035).	6/27/1997
	C71	Coronado II, AEC-7312A Fibre Channel Daughter (for Brooklyn) Hardware Specification, Revision 1.2 (Lavan Ex 16 (CNS 177192-210)) (**CD-ROM** Chaparral Exhibits D037) by Tom Yang.	7/18/1997
	C72	AEC-4412B, AEC7412/3B External RAID Controller Hardware OEM Manual, Revision 3.0. (Lavan Ex 17 (CNS 177124-165)) (**CD-ROM** Chaparral Exhibits D036).	8/25/1997
	C73	Memo Dated 8/15/97 to AEC-7312A Evaluation Unit Customers re: B001 Release Notes (Lavan Ex 18 (CNS 182878-879)) (**CD-ROM** Chaparral Exhibits D038),	8/15/1997
	C74	Brooklyn Main Board (AES-0302) MES Schedule (Lavan Ex I9 (CNS 177759-763)) (**CD-ROM** Chaparral Exhibits D039).	2/11/1997
	C75	News Release-Adaptec Adds Fibre Channel Option to its External RAID Controller Family (Lavan Ex 20 (CNS 182932-934)) (**CD-ROM** Chaparral Exhibits D040).	5/6/1997
	C76	AEC-4412B/7412B User's Guide, Rev. A (Lavan Ex 21) (**CD-ROM** Chaparral Exhibits D041).	6/19/1905
	C77	Data Book- AIC-7895 PCI Bus Master Single Chip SCSI Host Adapter (Davies Ex 1 (CNS 182944-64)) (**CD-ROM** Chaparral Exhibits D046).	5/21/1996
	C78	Data Book- AIC-1160 Fibre Channel Host Adapter ASIC (Davies Ex 2 (CNS 181800-825)) (**CD-ROM** Chaparral Exhibits D047).	6/18/1905
	C79	Viking RAID Software (Davies Ex 3 (CNS 180969-181026)) (**CD-ROM** Chaparral Exhibits D048).	6/18/1905
FMF	C80	Header File with Structure Definitions (Davies Ex 4 (CNS 180009-018)) (**CD-ROM** Chaparral Exhibits D049).	8/8/1996

FORM PTO 1449 US Department of Commerce Patent and Trademark Office				Application Number	90/007,123
				Filing Date	07/19/2004
				First Named Inventor	Hoese, Geoffrey
				Group Art Unit	2182
				Examiner Name	Fleming, Fritz M.
Sheet	5	of	6	Atty Docket Number	CROSS1120-14

Examiner Initials	Cite No.	OTHER PRIOR ART – NON PATENT LITERATURE DOCUMENTS	Date
FMF	C81	C++ SourceCode for the SCSI Command Handler (Davies Ex 5 (CNS 179136-168)) (**CD-ROM** Chaparral Exhibits D050).	8/8/1996
	C82	Header File Data Structure (Davies Ex 6 (CNS 179997-180008)) (**CD-ROM** Chaparral Exhibits D051).	1/2/1997
	C83	SCSI Command Handler (Davies Ex 7 (CNS 179676-719)) (**CD-ROM** Chaparral Exhibits D052).	1/2/1997
	C84	Coronado: Fibre Channel to SCSI Intelligent RAID Controller Product Brief (Kalwitz Ex I (CNS 182804-805)) (**CD-ROM** Chaparral Exhibits D053).	
	C85	Bill of Material (Kalwitz Ex 2 (CNS 181632-633)) (**CD-ROM** Chaparral Exhibits D054).	3/17/1997
	C86	Emails Dated 1/13-3/31/97 from P. Collins to Mo re: Status Reports (Kalwitz Ex 3 (CNS 182501-511)) (**CD-ROM** Chaparral Exhibits D055).	
	C87	Hardware Schematics for the Fibre Channel Daughtercard Coronado (Kalwitz Ex 4 (CNS 181639-648)) (**CD-ROM** Chaparral Exhibits D056).	
	C88	Adaptec Schematics re AAC-340 (Kalwitz Ex 14 CNS 177215-251)) (**CD-ROM** Chaparral Exhibits D057).	
	C89	Bridge Product Line Review (Manzanares Ex 3 (CNS 177307-336)) (**CD-ROM** Chaparral Exhibits D058).	
	C90	AEC Bridge Series Products-Adaptec External Controller RAID Products Pre-Release Draft, v.6 (Manzanares Ex 4 (CNS 174632-653)). (**CD-ROM** Chaparral Exhibits D059).	10/28/1997
	C91	Hewlett-Packard Roseville Site Property Pass for Brian Smith (Dunning Ex 14 (HP 489) (**CD-ROM** Chaparral Exhibits D078).	11/7/1996
	C92	Distribution Agreement Between Hewlett-Packard and Crossroads (Dunning Ex 15 (HP 326-33) (**CD-ROM** Chaparral Exhibits D079).	
	C93	HPFC-5000 Tachyon User's Manuel, First Edition (PTI 172419-839) (**CD-ROM** Chaparral Exhibits D084).	5/1/1996
	C94	X3T10 994D - (Draft) Information Technology: SCSI-3 Architecture Model, Rev. 1.8 (PTI 165977) (**CD-ROM** Chaparral Exhibits D087).	
	C95	X3T10 Project 1047D: Information Technology- SCSI-3 Controller Commands (SCC), Rev, 6c (PTI 166400-546) (**CD-ROM** Chaparral Exhibits D088).	9/3/1996
	C96	X3T10 995D- (Draft) SCSI-3 Primary Commands, Rev. 11 (Wanamaker Ex 5 (PTI 166050-229)) (**CD-ROM** Chaparral Exhibits D089).	11/13/1996
	C97	VBAR Volume Backup and Restore (CRDS 12200-202) (**CD-ROM** Chaparral Exhibits D099).	
	C98	Preliminary Product Literature for Infinity Commstor's Fibre Channel to SCSI Protocol Bridge (Smith Ex 11; Quisenberry Ex 31 (SPLO 428-30) (**CD-ROM** Chaparral Exhibits D143).	8/19/1996
	C99	Letter dated 7/12/96 from J. Boykin to B. Smith re: Purchase Order for Evaluation Units from Crossroads (Smith Ex 24) CRDS 8556-57) (**CD-ROM** Chaparral Exhibits D144).	7/12/1996
FMF	C100	CrossPoint 4100 Fibre Channel to SCSI Router Preliminary Datasheet (Hulsey Ex 9 (CRDS 16129-130)) (**CD-ROM** Chaparral Exhibits D145).	11/1/1996

FORM PTO 1449 US Department of Commerce Patent and Trademark Office				Application Number	90/007,123
				Filing Date	07/19/2004
				First Named Inventor	Hoese, Geoffrey
				Group Art Unit	2182
				Examiner Name	Fleming, Fritz M.
Sheet	6	of	6	Atty Docket Number	CROSS1120-14

Examiner Initials	Cite No.	OTHER PRIOR ART – NON PATENT LITERATURE DOCUMENTS	Date
FMF	C101	CrossPoint 4400 Fibre Channel to SCSI Router Preliminary Datasheet (Bardach Ex. 9, Quisenberry Ex 33 (CRDS 25606-607)) (**CD-ROM** Chaparral Exhibits D153).	11/1/1996
	C102	Fax Dated 07/22/96 from L. Petti to B. Smith re: Purchase Order from Data General for FC2S Fibre to Channel SCSI Protocol Bridge Model 11 (Smith Ex 25; Quisenberry Ex 23; Bardach Ex 11 (CRDS 8552-55; 8558) (**CD-ROM** Chaparral Exhibits D155).	
	C103	Email Dated 12/20/96 from J. Boykin to B. Smith re: Purchase Order for Betas in February and March (Hoese Ex 16, Quisenberry Ex 25; Bardach Ex 12 (CRDS 13644-650) (**CD-ROM** Chaparral Exhibits D156).	
	C104	Infinity Commstor Fibre Channel Demo for Fall Comdex, 1996 (Hoese Ex 15, Bardach Ex 13 (CRDS 27415) (**CD-ROM** Chaparral Exhibits D157).	
	C105	Fax Dated 12/19/96 from B. Bardach to T. Rarich re: Purchase Order Information (Bardach Ex. 14; Smith Ex 16 (CRDS 4460)) (**CD-ROM** Chaparral Exhibits D158).	
	C106	Miscellaneous Documents Regarding Comdex (Quisenberry Ex 2 (CRDS 27415-465)) (**CD-ROM** Chaparral Exhibits D165).	
	C107	CrossPoint 4100 Fibre Channel to SCSI Router Preliminary Datasheet (Quisenberry) Ex 3 (CRDS 4933-34) (**CD-ROM** Chaparral Exhibits D166) (CD-ROM Chaparral Exhibits D166).	
	C108	CrossPoint 4400 Fibre to Channel to SCSI Router Preliminary Datasheet; Crossroads Company and Product Overview (Quisenberry Ex 4 (CRDS 25606; 16136)) (**CD-ROM** Chaparral Exhibits D167).	
	C109	Crossroads Purchase Order Log (Quisenberry Ex 9 (CRDS 14061-062)) (**CD-ROM** Chaparral Exhibits D172).	
	C110	RAID Manager 5 with RDAC 5 for UNIX V.4 User's Guide (LSI-01854) (**CD-ROM** Chaparral Exhibits P062).	9/1/1996
	C111	Letter dated May 12, 1997 from Alan G. Leal to Barbara Bardach enclosing the original OEM License and Purchase Agreement between Hewlett-Package Company and Crossroads Systems, Inc. (CRDS 02057) (**CD-ROM** Chaparral Exhibits P130).	
	C112	CR4x00 Product Specification (CRDS 43929) (**CD-ROM** Chaparral Exhibits P267).	6/1/1998
	C113	Symbios Logic – Hardware Functional Specification for the Symbios Logic Series 3 Fibre Channel Disk Array Controller Model 3701 (Engelbrecht Ex 3 (LSI-1659-1733) (**CD-ROM** Pathlight Exhibits D074).	
	C114	Report of the Working Group on Storage I/O for Large Scale Computing; Department of Computer Science Duke University: CS-1996-21 (PTI 173330-347). (**CD-ROM** Pathlight Exhibits D098).	
	C115	Brian Allison's 1999 Third Quarter Sales Plan (PDX 38)CNS 022120-132)) (**CD-ROM** Pathlight Exhibits D201).	6/5/2001
FMF	C116	Brooklyn SCSI-SCSI Intelligent External RAID Bridge Definition Phase External Documentation (**CD-ROM** Pathlight Exhibits D129).	
Examiner Signature			Date Considered 5/23/2005

Notice of References Cited	Application/Control No. 90/007,123	Applicant(s)/Patent Under Reexamination 5,941,972	
	Examiner Fritz M. Fleming	Art Unit 2182	Page 1 of 1

U.S. PATENT DOCUMENTS

*		Document Number Country Code-Number-Kind Code	Date MM-YYYY	Name	Classification
	A	US-5,345,565 A	09-1994	Jibbe et al.	710/316
	B	US-5,634,111	05-1997	Oeda et al.	711/153
	C	US-			
	D	US-			
	E	US-			
	F	US-			
	G	US-			
	H	US-			
	I	US-			
	J	US-			
	K	US-			
	L	US-			
	M	US-			

FOREIGN PATENT DOCUMENTS

*		Document Number Country Code-Number-Kind Code	Date MM-YYYY	Country	Name	Classification
	N					
	O					
	P					
	Q					
	R					
	S					
	T					

NON-PATENT DOCUMENTS

*		Include as applicable: Author, Title Date, Publisher, Edition or Volume, Pertinent Pages)
	U	
	V	
	W	
	X	

*A copy of this reference is not being furnished with this Office action. (See MPEP § 707.05(a).)
Dates in MM-YYYY format are publication dates. Classifications may be US or foreign.

Oracle-Huawei-NetApp Ex. 1024, pg. 2144

Index of Claims

Application No.	Applicant(s)
90/007,123	5941972
Examiner	**Art Unit**
Fritz M Fleming	2182

√	Rejected	–	(Through numeral) Cancelled	N	Non-Elected	A	Appeal
=	Allowed	÷	Restricted	I	Interference	O	Objected

| Claim | | Date | | | | | | |

Search Notes

Application No.	Applicant(s)	
90/007,123	5941972	
Examiner	**Art Unit**	
Fritz M Fleming	2182	

SEARCHED

Class	Subclass	Date	Examiner
710	1-2, 100-101 [redacted] 305-3/6	1/21/05	FMF
711	100, 112, 113	"	"
updated done		5/20/05	FMF

INTERFERENCE SEARCHED

Class	Subclass	Date	Examiner

SEARCH NOTES (INCLUDING SEARCH STRATEGY)

	DATE	EXMR
EAST SEARCH NOTES	1/4/05	FMF
NPL SEARCH: SCSI, FC, Fibrechannel, Storage, block level, native ATM	"	"
EAST SCSI ARRAY DMA FIFO	5/20/05	FMF

Oracle-Huawei-NetApp Ex. 1024, pg. 2146

IN THE UNITED STATES PATENT AND TRADEMARK OFFICE	
REPLY TO OFFICE ACTION UNDER *EX PARTE* REEXAMINATION DATED 02/07/05	Atty. Docket No. **CROSS1120-14**
Applicants **Geoffrey B. Hoese, et al.**	
Reexamination Control No. **90/007,123**	Date Filed **07/19/2004**
Title **Storage Router and Method for Providing Virtual Local Storage**	
Group Art Unit **2182**	Examiner **Fleming, Fritz**
Confirmation Number: **2293**	Patent No. **5,941,972**

6548 U.S. PTO
04/06/05

Commissioner for Patents
P.O. Box 1450
Alexandria, VA 22313-1450

Dear Sir:

Certificate of Mailing Under 37 C.F.R. §1.10

I hereby certify that this correspondence is being deposited with the United States Postal Service as Express Mail No. **EV616964352US** in an envelope addressed to Commissioner for Patents, P.O. Box 1450, Alexandria, VA 22312-1450 on 4-5-05

Signature

Printed Name

In response to the Official Action mailed February 7, 2005 in the reexamination of United States Patent No. 5,941,972 (the "'972 Patent"), Applicant respectfully requests the Examiner reconsider the rejections of the Claims in view of the this reply.

IN THE UNITED STATES PATENT AND TRADEMARK OFFICE		
CERTIFICATE OF SERVICE UNDER 37 C.F.R. 1.248		Atty. Docket No. **CROSS1120-14**
Applicant **Geoffrey B. Hoese, et al.**		
Reexamination Control No. **90/007,123**	Date Filed **07/19/2004**	
Title **Storage Router and Method for Providing Virtual Local Storage**		
Group Art Unit **2182**	Examiner **Fleming, Fritz**	
Confirmation Number: **2293**		

Applicant hereby serves the Reply to Office Action Under *Ex Parte* Reexamination Dated 02/07/05 in the above referenced case to:

Larry E. Severin
Wang, Hartmann & Gibbs, PC
1301 Dove Street, #1050
Newport Beach, CA 92660

As per 35 U.S.C. §1.248 service is made via first class mail on April 6, 2005.

Respectfully submitted,

Sprinkle IP Law Group

John L. Adair
Reg. No. 48,828

Dated: April 6, 2005

1301 W. 25th Street, Suite 408
Austin, Texas 78705
Tel. (512) 637-9220
Fax. (512) 371-9088

Enclosures

IN THE CLAIMS:

1. A storage router for providing virtual local storage on remote SCSI storage devices to Fibre Channel devices, comprising:

a buffer providing memory work space for the storage router;

a Fibre Channel controller operable to connect to and interface with a Fibre Channel transport medium;

a SCSI controller operable to connect to and interface with a SCSI bus transport medium; and

a supervisor unit coupled to the Fibre Channel controller, the SCSI controller and the buffer, the supervisor unit operable:

to maintain a configuration for SCSI storage devices connected to the SCSI bus transport medium that maps between Fibre Channel devices and SCSI storage devices and that implements access controls for storage space on the SCSI storage devices; and

to process data in the buffer to interface between the Fibre Channel controller and the SCSI controller to allow access from Fibre Channel initiator devices to SCSI storage devices using native low level, block protocol in accordance with the configuration.

2. The storage router of Claim 1, wherein the configuration maintained by the supervisor unit includes an allocation of subsets of storage space to associated Fibre Channel devices, wherein each subset is only accessible by the associated Fibre Channel device.

3. The storage router of Claim 2, wherein the Fibre Channel devices comprise workstations.

4. The storage router of Claim 2, wherein the SCSI storage devices comprise hard disk drives.

5. The storage router of Claim 1, wherein th9 Fibre Channel controller comprises:

a Fibre Channel (FC) protocol unit operable to connect to the Fibre Channel transport medium;

a first-in-first-out queue coupled to the Fibre Channel protocol unit; and

a direct memory access (DMA) interface coupled to the first-in-first-out queue and to the buffer.

6. The storage router of Claim 1, wherein the SCSI controller comprises:

a SCSI protocol unit operable to connect to the SCSI bus transport medium;

an internal buffer coupled to the SCSI protocol unit; and

a direct memory access (DMA) interface coupled to the internal buffer and to the buffer of the storage router.

7. A storage network, comprising:

a Fibre Channel transport medium; a SCSI bus transport medium;

a plurality of workstations connected to the Fibre Channel transport medium;

a plurality of SCSI storage devices connected to the SCSI bus transport medium; and

a storage router interfacing between the Fibre Channel transport medium and the SCSI bus transport medium, the storage router providing virtual local storage on the SCSI storage devices to the workstations and operable:

to map between the workstations and the SCSI storage devices;

to implement access controls for storage, space on the SCSI storage devices; and

to allow access from the workstations, to the SCSI storage devices using native low level, block protocol in accordance with the mapping and access controls.

8. The storage network of Claim 7, wherein the access controls include an allocation of subsets of storage space to associated workstations, wherein each subset is only accessible by the associated workstation.

9. The storage network of Claim 7, wherein the SCSI storage devices comprise hard disk drives.

10. The storage network of Claim 7, wherein the storage *router* comprises:

a buffer providing memory *work* space for the storage router;

a Fibre Channel controller operable to connect to and interface with a Fibre Channel transport medium, the Fibre Channel controller further operable to pull outgoing data from the buffer and to place incoming data into the buffer;

a SCSI controller operable to connect to and interface with a SCSI bus transport medium, the SCSI controller further operable to pull outgoing data from the buffer and to place incoming data into the buffer; and

a supervisor unit coupled to the Fibre Channel controller, the SCSI controller and the

buffer, the supervisor unit operable:

to maintain a configuration for the SCSI storage devices that maps between Fibre Channel devices and SCSI storage devices and that implements the access controls for storage space on the SCSI storage devices; and

to process data in the buffer to interface between the Fibre Channel controller and the SCSI controller to allow access from workstations to SCSI storage devices in accordance with the configuration.

11. A method for providing virtual local storage on remote SCSI storage devices to Fibre Channel devices, comprising:

interfacing with a Fibre Channel transport medium;

interfacing with a SCSI bus transport medium;

maintaining a configuration for SCSI storage devices connected to the SCSI bus transport medium that maps between Fibre Channel devices and the SCSI storage devices and that implements access controls for storage space on the SCSI storage devices; and

allowing access from Fibre Channel initiator devices to SCSI storage devices using native low level, block protocol in accordance with the configuration.

12. The method of Claim 11, wherein maintaining the configuration includes allocating subsets of storage space to associated Fibre Channel devices, wherein each subset is only accessible by the associated Fibre Channel device.

13. (The method of Claim 12, wherein the Fibre Channel devices comprise workstations.

14. The method of Claim 12, wherein the SCSI storage devices comprise hard disk drives.

TABLE OF CONTENTS FOR RESPONSE TO REJECTIONS

I. Rejections Under 35 U.S.C. § 103

A. Introduction

B. Claims 11-14

1. Overview of Claim 11

2. Petal Does Not Disclose "Allowing Access" (From A Fibre Channel Initiator Device to SCSI Storage Devices Using NLLBP)

3. Petal Does Not Disclose Mapping Between Fibre Channel Devices and SCSI Storage Devices

4. Petal Does Not Disclose Implementing "Access Controls"

a. Implementing Access Controls Requires Allowing Access Using NLLBPs

b. Petal Does Not Render The Access Control Limitation of Claim 11 Obvious

c. There Is No Disclosure or Teaching In Petal That The 'Security' Referenced Therein Would Allow Access Using NLLBP

5. Quam and Cummings

6. Claim 12

7. Summary

C. Claims 7-9

1. Overview of Claim 7

2. Petal Does Not Disclose "Allow[ing] Access" From A Workstation Using NLLBP

3. Petal Does Not Disclose A "Map Between Workstations And Storage Devices

4. Petal Does Not Provide Access Through "Access Controls"

5. Additional Cited References

6. Claim 8

7. Summary

D. Claim 1

1. Overview of Claim 1

2. Petal Does Not Disclose "Allow[ing] Access" Using NLLBP

3. Petal Does Not Disclose A "Map" Between Fibre Channel Devices SCSI Storage Devices

4. Petal Does Not Disclose, Teach or Suggest the "Access Controls" Limitation Of Claim 1

5. There Is No Showing That The Remainder Of The References Contain The Limitations Missing From Petal

6. Claim 2

E. Claims 2-6, 8-9 and 12-14

G. Summary: There is No *Prima Facie* Showing of Obviousness

II. Conclusion

I. Rejections Under 35 U.S.C. §103

A. Introduction

Claims 1-16 and are variously rejected under 35 U.S.C. §103(a) as being unpatentable over Petal in view of Quam, Cummings, Crouse and Pisello.

In order to establish a *prima facie* case of obviousness, the Examiner must show: that (1) the prior art references teach or suggest all of the claim limitations, (2) that there is some suggestion or motivation in the references (or within the knowledge of one of ordinary skill in the art) to modify or combine the references and (3) that there is a reasonable expectation of success. M.P.E.P. 2142, 2143; In re Vaeck, 947 F.2d 488, 20 U.S.P.Q.2d 1438 (Fed. Cir. 1991). The Examiner must explain with reasonable specificity at least one rejection – otherwise, the Examiner has failed procedurally to establish a *prima facie* case of obviousness. M.P.E.P. 2142; Ex parte Blanc, 13 U.S.P.Q.2d 1383 (Bd. Pat Application. & Inter. 1989). When the motivation to combine the teachings of the references is not immediately apparent, it is the duty of the Examiner to explain why the combination of the teachings is proper. Ex parte Skinner, 2 U.S.P.Q.2d 1788, 1790 (Bd. Pat. App. & Inter. 1986).

Applicants respectfully submit that the Examiner has failed to establish a *prima facie* case of obviousness as the references do not disclose, teach or suggest all of the claim limitations of Claims 1-16. More particularly, the references do not disclose, teach or suggest to i) map between Fibre Channel devices and SCSI storage devices, ii) implement access controls for the storage space on the SCSI storage devices and iii) allow access from Fibre Channel initiator devices to SCSI storage devices using a native low level block protocol ("NLLBP"). Furthermore, Applicants submit that one of ordinary skill in the art would not be motivated to combine Petal with Quam, Cummings, Crouse or Pisello.

B. Claims 11-14

The Examiner rejected Claim 11 as being unpatentable over Petal in View of Quam and Cummings and devoted a significant portion of the Office Action to analyzing Claim 11 in light of Petal. Accordingly, Applicants will first show how Claim 11 differs from the cited references and then address the other Claims.

1. Overview of Claim 11

Claim 11 recites:

> A method for providing virtual local storage on remote SCSI storage devices to Fibre Channel devices, comprising:
> interfacing with a Fibre Channel transport medium;
> interfacing with a SCSI bus transport medium;
> maintaining a configuration for SCSI storage devices connected to the SCSI bus transport medium that maps between Fibre Channel devices and SCSI storage devices and that implements access controls for storage space on the SCSI storage devices; and
> allowing access from Fibre Channel initiator devices to SCSI storage devices using native low level, block protocol in accordance with the configuration. [emphasis added].

Claim 11 includes the limitations of maintaining a configuration that (i) maps between Fibre Channel devices and SCSI storage devices (ii) and implements access controls. Additionally, Claim 11 includes the limitation of "allowing access from Fibre Channel initiator devices to SCSI storage devices using native low level block protocol in accordance with the configuration". These features of the present invention allow a Fibre Channel initiator device (e.g., workstation) to access only that portion (or portions) of the storage devices associated with that particular host. These features also allow a host (or hosts) to communicate with storage devices using only native low level block protocols ("NLLBPs").

2. Petal Does Not Disclose "Allowing Access" (From a Fibre Channel Initiator Device to SCSI Storage Devices Using NLLBP)

Claim 11, as discussed above, recites "allowing access from Fibre Channel initiator devices to SCSI storage devices using native low level block protocol . . ." A NLLBP is a protocol that enables workstations and network servers to exchange information with storage devices without the overhead of high-level protocols and file systems typically required by network servers. As explained below, this definition for NLLBP is supported by both the Specification of the '972 Patent, and the judicial interpretation of this limitation by Judge Sparks of the U.S. District Court for the Western District of Texas (an interpretation upheld on appeal by the Court of Appeals for the Federal Circuit).

In systems prior to the present invention, when a computer workstation would make a storage request to a storage device (e.g., disk drive) through a network server, the workstation first had to translate the request from its file system protocols to higher level network protocols to communicate with the network server. The network server then would translate these high level protocols into low level requests to the storage device(s). *See* '972 Patent Specification, col. 1, lines 40-50 and col. 3, lines 11-15 (distinguishing an NLLBP from higher-level protocols

by contrasting the present invention to prior art solutions). This high level to low level translation wastes valuable time and makes the access of information occur at a much slower rate. *See* '972 Patent Specification, col. 1, lines 40-50.

Further, in *Crossroads v. Chaparral Network Storage, Inc.*, Western District of Texas, Civil Action No. A-00-CA-217-SS and *Crossroads Systems (Texas), Inc., v. Pathlight Technology, Inc.*, Western District of Texas, Civil Action No. A-00CA-248-JN (collectively, the "Chaparral Litigation"), the U.S. District Court for the Western District of Texas issued a Joint Markman Order (the "Markman Order") interpreting the term NLLBP for the purposes the '972 Patent as follows:

> a set of rules or standards that enable computers to exchange information and do not involve the overhead of high level protocols and file systems typically required by network servers.

A copy of the Markman Order is attached hereto as Exhibit A. This construction and the validity of the '972 Patent were upheld by the Federal Circuit on appeal. A copy of the Federal Circuit decision affirming the decision of the lower court is attached hereto as Exhibit B. Thus, based on the Markman Order, an NLLBP is a protocol that enables computers to exchange information without the overhead of high-level protocols and file systems typically required by network servers.

As discussed in the '972 Patent, allowing access from host devices (e.g., workstations) to storage devices is done using NLLBPs in the present invention. Using the example of a first of Fibre Channel ("FC") and second transport medium of Small Computer System Interface ("SCSI"), a FC-connected workstation can communicate low level SCSI commands directly to a storage device using NLLBPs. For this example the present invention accomplishes this by encapsulating the low level SCSI commands in an FC 'wrapper' or 'layer.' The specification of the '972 Patent discusses such an exemplary embodiment where FC-attached initiator (e.g., workstation) issues SCSI-3 FCP commands, and an associated SCSI target storage device operates on a SCSI-2 protocol (See, '972 Patent, col. 6, lines 33-45). In this case, a storage router connected between the host device and the storage device receives the FC-encapsulated low level SCSI commands, removes the FC encapsulation, and forwards the low level SCSI commands to the storage devices (provided the workstation is allowed to have such access, as will be discussed more fully below). In this example, there is no translation of the commands from a higher level protocol to a low level protocol. In other words, the storage router is not required to translate some high level command from the workstation (e.g., a file system command, or function call with arguments) into a low level SCSI command. Rather, the storage router simply strips the FC 'layer' off of the existing SCSI command, and forwards the

SCSI command to the storage device without any high-to-low level translation (because no such high level to low level translation is needed). Thus, when a host workstation is allowed to have access to a storage device, that access is accomplished using only NLLBPs.

Petal, on the other hand, discloses a system in which Petal clients (i.e., workstations) send higher-level protocol commands to the Petal Server that, in turn, transforms these higher–level, higher overhead commands into low-level SCSI commands that are forwarded to the storage devices (i.e., at least one high level to low level translation takes place between the workstation and the storage device). Petal clients are configured with a Petal device driver in the kernel layer of the Petal client. *See*, *Petal* page 88, col. 2, section 3. Higher level applications (i.e., user space applications) see virtual disks (representations of the storage devices) through the Unix File System. *See* Petal, page 90, col. 1, section 3.2. When a Petal client wishes to access a storage device behind the Petal server, the client issues a file system command to the virtual disk which is passed through the class layer to the Petal device driver (i.e., the kernel layer process for accessing the virtual disk). The Petal device driver then issues a remote procedure call ("RPC") using the User Datagram Protocol ("UDP") to the Petal server to read or write data. *See, Id* at page 88, col. 2, section 3 (describing the RPC interface) and page 89, col. 1, section 3.1 (describing handling read and write requests). The Petal device driver acts as a filter driver to translate the command to the virtual disk seen by the user space application into an RPC that is sent out in UDP packets.

An RPC is a well known mechanism in networked operating systems and is essentially a function call to the Petal Server. In issuing an RPC, a client will provide a server with the appropriate arguments in a UDP packet so that the server can perform some process. The Petal Server performs a transformation step when receiving the RPC in the UDP packet by processing the RPC in the UDP packet to execute the called process and generate the appropriate low level SCSI READ and WRITE commands. Thus, the Petal client uses the traditional network mechanism of issuing a higher level command (e.g., an RPC in a UDP packet) to the network server that the network server processes to call a function. The Petal server must execute the appropriate function to transform the information in the UDP packets to the appropriate low level SCSI command.

Thus, the Petal system does not allow the client (i.e., workstation) to access the storage devices using an NLLBP. Instead, the Petal client uses a scheme in which high level file system commands to virtual disks are translated into RPCs which are packaged in UDP packets and transported to the Petal server for transformation into low level commands. Unlike the NLLBP commands described and claimed in the '972 Patent, these RPC in UDP packets contain additional higher level overhead and require transformation to low level SCSI

commands at the Petal Server. As noted above, the Petal server executes the called procedure to transform the RPC in UDP to the appropriate low level SCSI command.

The process of Petal therefore requires first creating an RPC, and then encapsulating the RPC in UDP at the Petal client, and further executing a procedure to transform the RPC in UDP to a low level SCSI command. Consequently, while the Examiner has pointed out various portions of Petal that discuss using block-level (i.e., low level) storage protocols (e.g., SCSI commands), it is only in the context of the time period after high level RPCs are transformed into the low level SCSI commands. The system of Petal is the type of system that the present invention was designed to overcome, because the system of Petal **does** involve the overhead of high level protocols typically required by network servers (i.e., RPCs), and requires a transformation the high level protocols into low level SCSI commands at the Petal server.

Therefore, Petal does not disclose, teach or suggest a system for "allowing access from Fibre Channel initiator devices to SCSI storage devices using native low level block protocol," as recited in independent Claim 11.

3. Petal Does Not Disclose Mapping Between Fibre Channel Devices and SCSI Storage Devices

Claim 11 also recites a configuration that "maps between Fibre Channel devices and SCSI storage devices." Mapping between Fibre Channel device and SCSI storage devices in the present invention refers to a mapping between the Fibre Channel devices and SCSI storage devices such that a particular Fibre Channel device on the Fibre Channel transport medium is associated with a storage device, storage devices, or portions thereof, on the SCSI bus transport medium. As discussed in the '972 Patent Specification, the mapping provides a correlation between devices on the first data transport medium (e.g., workstations) and the storage devices. *See*, '972 Patent col. 2, lines 6-17 and col. 8, lines 53-65.

In the Chaparral Litigation, the U.S. District Court for the Western District of Texas adopted the definition that a "map" contains a representation of a device on one side of the storage router to a storage device on the other side (e.g., from a Fibre Channel host device to a SCSI storage device). *See,* Markman Order, Exhibit A, page 12. The mapping of the '972 Patent associates the Fibre Channel devices (e.g., workstations) with SCSI storage devices on the SCSI bus transport medium. Thus, the mapping can include mapping from a host identifier (e.g., address or other identifier) to a virtual representation of a storage device (e.g., a virtual Logical Unit Number (LUN)), and potentially even further from the virtual representation of the storage device to a physical representation of the storage device (e.g., a physical LUN).

It should be expressly understood that the 'mapping' of the present invention is not identical to the concept of "virtualization." In virtualization, a storage device (or portion thereof) is presented with a particular logical address to the hosts or workstations. While it is clear that the present invention can include virtualization as part of the mapping (e.g., the map can include the mapping from a virtual representation of the storage (virtual LUN) to a physical representation of the storage (physical LUN)), such virtualization is not, in and of itself, a mapping between devices as defined in the '972 Patent. *See*, '972 Patent, col. 8, line 53-65. In fact, this type of virtualization was available in a number of RAID systems at the time Petal was written. Virtualization does not require that representations of workstations on one side of the storage router be mapped to a storage device(s) on the other side of the storage router.

Petal does not disclose, teach or suggest a map that maps between Fibre Channel devices and SCSI storage devices connected to the SCSI bus transport medium as recited in Claim 11 of the '972 Patent. In Petal there is simply no map that associates the host devices (i.e., the Petal clients) with the storage devices or representations of the storage devices. At best, Petal teaches "virtualization" of storage devices. In other words, Petal discusses a virtual to physical mapping of the storage devices rather than a mapping from the device making a request (e.g., workstation) to the storage device for which the request is intended. Petal states:

> The basic problem is to translate virtual addresses of the form <virtual-disk-identifier, offset> to physical addresses of the form <server-identifier, disk-identifier, disk-offset>.

See Petal, page 85-86, sections 2.1-2.3 and Figure 4 (entitled "Virtual to Physical Mapping").

In Petal, a virtual disk directory of virtual disks is mapped to a global directory which is mapped to physical disks. *Id.* A client workstation provides a virtual disk identity which is translated into a global map identifier. *Id.* The global map determines the server responsible for translating the given offset. *Id.* The physical map of the specified server translates the global map identifier and offset to a physical disk and an offset within that disk. *See Id.*, page 86, col. 1, section 2.1. Thus, the mapping of Petal only represents the virtualization mapping of storage devices and does not correlate or associate the storage devices (either virtual or physical) to particular Petal clients (e.g., workstations) on the other side of the Petal server. In fact, the virtualization-type mapping described in Petal is simply a description of the virtualization technique generally used in RAID systems at the time of Petal.

The Examiner correctly points out that, in Petal, a disk identifier used by clients to reference a particular virtual disk is "mapped" to a physical identifier. However, this is simply virtualization-type mapping. There is no correspondence (or map) made from the Petal clients to the storage devices (or portions thereof) behind the Petal Server. Put another way, there is

no mechanism disclosed in Petal to perform the function of mapping a particular client workstation to a particular storage device (or portion). Consequently, Petal teaches a virtualization scheme, not a configuration that "maps between Fibre Channel devices and SCSI storage devices" as recited in Claim 11 of the '972 Patent.

4. Petal Does Not Disclose Implementing "Access Controls"

a. Implementing Access Controls Requires Allowing Access Using NLLBPs

Claim 11 recites "implementing access controls" which requires allowing access using NLLBPs. As described in the '972 Patent, "access controls" are a particular form of security measure designed to prevent unauthorized access to particular storage devices or portions of storage devices by certain workstations. When "access controls" are implemented, particular Fibre Channel devices may be permitted access to particular storage devices or subsets of storage devices. *See, e.g.,* FIGURE 3 of the '972 Patent (permitting access from particular workstations to undivided storage devices as well as divided subsections within a single storage device). According to the previously mentioned Markman Order, "access controls" means "providing controls which limit a computer's access to specific subset of storage devices or sections of a single storage device." *See,* Markman Order, Exhibit A, page 6.

The "access controls" of the '972 Patent allow access using a NLLBP such that requests from devices connected to the first transport medium (e.g., workstations) are directed to assigned virtual local storage on the storage devices. *See*, '972 Patent, col. 8, lines 53-65. The '972 Patent recites:

> The storage router can...map, for each initiator, what storage access is available and what partition is being addressed by a particular request. In this manner, the storage space provided by [storage devices] can be allocated to [Fibre Channel devices] to provide virtual local storage...

See '972 Patent, col. 8, lines 59–65.

Thus, the "access controls" described in the '972 Patent are device-centric in that they permit or deny access from particular devices connected to the first data transport medium (e.g., workstations) to particular storage devices (or subsets thereof) according to the configuration. The access controls are thus part of the configuration for routing commands from a device connected to the first transport medium to *defined* storage location(s) using NLLBPs (i.e., without requiring the overhead of high level protocols typically required by network servers) according to the map.

b. Petal Does Not Render The Access Controls Limitation Of Claim 11 Obvious

In rejecting the limitation of "implementing access controls" the Examiner points to Petal, page 90, col. 2, section 4, which states in pertinent part:

> ...currently we do not provide any special support for protecting a client's data from other clients; however, it would not be difficult to provide security on a per virtual disk basis.

Applicants submit, however, that the statement "it would not be difficult to provide security on a per virtual disk basis," without more, does not enable security on per virtual disk basis in the UDP environment of Petal. UDP is primarily a broadcast protocol in which the computer issuing a UDP communication typically places UDP packets on a network without regard to the device that receives the packets.

Petal provides no support as to how to implement its "security on a per virtual disk basis" for UDP broadcast packets communicated over an ATM transport medium. For example, a common security method in packet based networks is the use of access control lists ("ACLs"). While ACLs may be used to entirely block UDP communications (e.g., as in a firewall), Petal provides no suggestions on how to implement ACLs in a UDP environment to limit access to a portion of a server file system (e.g., a particular virtual disk). As Petal provides no support for providing security in the UDP/ATM environment, Applicants respectfully submit that Petal, at best, only makes it 'obvious to try' some unspecified form of security.

"An 'obvious-to-try' situation exists when a general disclosure may pique the scientist's curiosity, such that further investigation might be done as the result of the disclosure, but the disclosure itself does not contain a sufficient teaching of how to obtain the desired result, or that the claimed result would be obtained if certain direction were followed." *In re Eli Lilly & Company*, 902 F.2d 943, 945, 14 USPQ.2d 1741 (Fed Cir. 1990). "Obvious-to-try", however, is not the standard for obviousness under §103. *See*, *In Re O'Farrell*, 853 F.2d 894, 902, 7 USPQ.2d 1673 (Fed. Cir. 1988). For example, the statement in a patent that "the user of the external field canceling method . . . can allow for gradient fields to be produced with greatly reduced problems" provided only general guidance as to the form of the claimed invention and how to achieve it but did not provide sufficient guidance to render the claimed invention obvious. *See*, *In Re Roemer*, 258 F.3d, 1303, 1309-10, 59 USPQ.2d 1527 (Fed. Cir. 2001). Similarly, the Petal reference does not provide sufficient guidance as to what is meant by "security" or how to implement such a "security" feature; and certainly does not provide any guidance on how to implement "access controls" as recited in Claim 11 of the '972 Patent.

At best, the statement in Petal that "currently we do not provide any special support for protecting a client's data from other clients; however, it would not be difficult to provide security on a per virtual disk basis" is an invitation-to-try to implement some unspecified security feature on a per virtual disk basis. The statement does not provide any teaching or suggestion as to how the security feature would be achieved, much less how "access controls" to allow access using NLLBPs would be achieved. Thus, while it may be 'obvious-to-try' some unspecified security feature based on the above-cited statement, one is left completely in the dark as to how such security would be achieved.

Moreover, the Examiner has not pointed to any art or other evidence in the record such that one of ordinary skill in the art would have a reasonable expectation of success in implementing the claimed "access controls" to allow access using an NLLBP in a UDP/ATM environment to limit access to a particular virtual disk. If the Examiner is relying on his own knowledge that one of skill in the art would know how to implement "access controls" to allow access using an NLLBP on a per virtual disk basis in the Petal environment, then Applicants respectfully request that the Examiner provide an affidavit detailing the data on which the Examiner relies for this position, or alternatively allow Claim 11. See 37 CFR 1.107(b) and MPEP 707.05.

c. There Is No Disclosure or Teaching In Petal That The 'Security' Referenced Therein Would Allow Access Using NLLBP

Even though the Petal article states that "it would not be difficult to provide security on a per virtual disk basis" there is no teaching or suggestion as to how such security would be provided. Certainly, there is no teaching or suggestion in Petal that a 'security' feature could be implemented to allow access using an NLLBP. It simply is unclear what type or manner of 'security' Petal references. For example, security can be a simple password-based security scheme, or something much more complex.

Moreover, even if security were implemented in Petal, there is no teaching or suggestion that such security would be implemented to allow access using a NLLBP. It would appear that any security implemented would be on top of the high level RPC over UDP scheme of Petal. Again, this would appear to require the high-level protocols and would not provide access using an NLLBP. Thus, even if security were applied to the system of Petal, this does not suggest access controls that allow for access using a NLLBP.

5. Quam and Cummings

The Examiner relies on Quam and Cummings for the proposition that "it would have been obvious to change from ATM to Fibre Channel in the system of Petal." Regardless of this, neither Quam nor Cummings makes up for the deficiencies of Petal and the Examiner has not pointed out where Quam or Cummings teach or suggest (i) mapping between Fibre Channel devices and SCSI storage devices, (ii) implementing access controls and (iii) allowing access from Fibre Channel initiator devices to SCSI storage devices using native low level block protocol. Even if Quam and Cummings are combined with Petal, the combination would lack these features of Claim 11. Accordingly, Applicants respectfully request allowance of Claim 11.

6. Claim 12

Claim 12 recites "allocating subsets of storage space to associated Fibre Channel devices, wherein each subset is only accessible by the associated Fibre Channel device.

Thus, in Claim 12, Fibre Channel devices are allocated storage devices (or subsets of storage devices) such that the allocated subset is only accessible by the associated Fibre Channel devices. This is supported by the Markman Order in which the court adopted the construction that "allocation of subsets of storage space to associated Fibre Channel devices, wherein each subset is only accessible by associated Fibre Channel device" means that subsets of storage are allocated to specific fibre channel devices for purposes of the '972 Patent. *See*, Markman Order Exhibit A, pages 6-7.

As discussed above in more detail, the mapping of Petal does not allocate storage to particular Petal clients, but simply provides for virtualization of disks. Consequently, Petal does not disclose, teach or suggest the limitations of Claim 12. Moreover, Applicants respectfully submit the Examiner has not pointed to these limitations in other references and has therefore not established a prima facie case of obviousness. Applicants therefore request allowance of Claim 12.

7. Summary

In sum, the cited references fail to teach: (1)"allowing access from Fibre Channel initiator devices to SCSI storage devices using native low level block protocols," (2) maintaining a configuration that "maps between Fibre Channel devices and SCSI storage devices" and (3) maintaining a configuration that "implements access controls."

Instead, Petal teaches a system in which high level RPC calls in UDP packets must be transformed into low-level SCSI commands by the Petal server. Further, there is no disclosure,

teaching or suggestion in Petal that clients on one side of the Petal server should be mapped to storage devices on the other side of the Petal server. Moreover, access controls that allow access using NLLBPs are not disclosed, taught or suggested in Petal nor is any other security feature. At most, Petal suggests that it would be 'obvious-to-try' adding an undefined security measure, without providing any direction as to how to do so with a reasonable expectation of success. Moreover, the Examiner has not pointed out where these features can be found in Quam and Cummings. Therefore, Applicants submit that Petal, Quam and Cummings (alone or in combination) do not render obvious the present invention as recited in Claim 11, and respectfully requests allowance of such claim. Applicants also respectfully request allowance of Claims 12-14.

C. Claims 7-9

Claims 7-9 stand rejected under 35 U.S.C. §103 as being unpatentable over Petal in view of Quam and Cummings. Applicants respectfully submit that independent Claim 7 is distinguishable from the cited references for similar reasons as discussed above with reference to Claim 11, as well as additional reasons. For completeness, the Applicants will review the differences discussed above with respect to Claim 11, but for the sake of brevity will summarize the explanations of these differences rather than repeating entire arguments already presented.

1. Overview of Claim 7

Claim 7 recites:

> A storage network, comprising:
> a Fibre Channel transport medium;
> a SCSI bus transport medium;
> a plurality of workstations connected to the Fibre Channel transport medium;
> a plurality of SCSI storage devices connected to the SCSI bus transport medium; and
> a storage router interfacing between the Fibre Channel transport medium and the SCSI bus transport medium, the storage router providing virtual local storage on the SCSI storage devices to the workstations and operable:
> to map between the workstations and the SCSI storage devices;
> to implement access controls for storage space on the SCSI storage devices; and
> to allow access from the workstations to the storage devices using native low level, block protocol in accordance with the mapping and access controls.

Claim 7, thus, specifies a "storage router" that maps between workstations and storage devices, implements access controls and allows access from workstations to the storage devices using NLLBP in accordance with the mapping and access controls. As with Claim 11, Applicants submit that the system of Petal does not disclose, teach or suggest i) "allow[ing] access from the workstations to the SCSI storage devices" using NLLBP, ii) "map[ping] between the workstations and the SCSI storage devices, and iii) "implement[ing] access controls".

2. Petal Does Not Disclose "Allow[ing] Access" From A Workstation Using NLLBP

The present invention, in accordance with Claim 7, allows workstations to access storage devices using a NLLBP. A NLLBP, as discussed above, is a set of rules or standards that enable computers to exchange information and do not involve the overhead of high level protocols and file systems typically required by network servers. Thus, the workstations described in Claim 7 can access the claimed SCSI storage devices using low level NLLBP commands which have not been translated from high level commands.

Petal, on the other hand, teaches a system in which a Petal client issues high level commands as RPCs in UDP packets, where the RPC calls a function of the Petal server Unix operating system. The Petal server must transform the high level RPC in UDP into a low level SCSI command by implementing the called procedure to generate the appropriate SCSI command(s). Petal, thus, uses a traditional RPC scheme that involves the overhead of high level protocols typically required by traditional network servers. Consequently, the Petal server does not allow the Petal clients to access the storage devices using an NLLBP.

3. Petal Does Not Disclose A "Map" Between Workstations And SCSI Storage Devices

The storage router of Claim 7 maps between workstations connected to the Fibre Channel transport medium on one side of the storage router and the SCSI storage devices located on the other side of the storage router. This mapping is more than mere virtualization as the storage router associates workstations with particular SCSI storage devices or subsets of storage devices.

Petal does not disclose, teach or suggest a map that associates particular devices connected to the first transport medium with particular storage devices (or subsets thereof).

Rather, Petal teaches that a virtual to physical mapping (i.e., virtualization of the storage device) takes place. There is, however, no correspondence made between the clients and storage devices (or portions thereof) in the mapping of Petal; i.e., there is no mechanism disclosed to say "this client maps to that storage device" on the other side of the Petal server. Consequently, Petal teaches a virtualization scheme not a "mapping" between workstations and SCSI storage devices.

4. Petal Does Not Provide Access Through "Access Controls"

As discussed above with respect to Claim 11, the sole statement in Petal relevant to access controls is "currently we do not provide any special support for protecting a client's data from other clients; however, it would not be difficult to provide security on a per virtual disk basis," does not in fact disclose or teach "access controls". This statement provides, at best, a suggestion that it is 'obvious-to-try' an undefined security measure in the UDP/ATM system of Petal (rather than access controls that allow access using NLLBP). Applicants therefore submit that Petal does not disclose, teach or suggest a supervisor unit that implements "access controls" as recited in Claim 7.

5. Additional Cited References

Applicants respectfully submit that the Examiner has not pointed out where Quam or Cummings teach or suggest (i) mapping between devices connected to a Fibre Channel transport medium and SCSI storage devices, (ii) "implementing access controls" and (iii) "allowing access from Fibre Channel initiator devices to SCSI storage devices using native low level block protocol". Even if Quam and Cummings are combined with Petal, the combination would lack these features of Claim 7. Accordingly, Applicants respectfully submit that a *prima facie* case of obviousness has not been made and request allowance of Claim 7.

6. Claim 8

Claim 8 depends from Claim 7 and recites that the access controls "include an allocation of subsets of storage space to associated workstations, wherein each subset is only accessible by the associated workstation." Thus, the claimed access controls allocate subsets of storage to particular workstations. Applicants respectfully submit that the cited references do not teach this feature of Claim 7 as Petal does not describe or suggest allocating storage or subsets of storage to particular clients.

7. Summary

Petal fails to disclose, teach or suggest a storage router which performs the functions of i) "allow[ing] access from the workstations to the SCSI storage devices" using NLLBP, ii) "map[ping] between the workstations and the SCSI storage devices, and iii) "implement[ing] access controls."

Instead, Petal teaches a Petal server that transforms higher level RPC calls in UDP packets to generate low-level SCSI commands for communicating with storage devices. Also, there is no disclosure, teaching or suggestion that the Petal server should map clients on one side of the Petal server to storage devices on the other side of the Petal server. Moreover, Petal does not disclose or suggest providing "access controls" as claimed, nor any other security method. At most, it is suggested that it would be 'obvious-to-try' adding security without providing any direction as to how to do so with a reasonable expectation of success. Therefore, Applicants submit that Petal does not anticipate or render obvious the present invention as recited in Claim 7. Moreover, the Examiner has not pointed out where Quam and Cummings make up for the deficiencies in Petal. Therefore, Applicants respectfully request allowance of Claim 7. Applicants also respectfully request allowance of Claims 8-10.

D. Claim 1

In rejecting Claim 1, the Examiner relies on Petal, Quam, Cummings and Crouse. Applicants respectfully submit, however, that several of the features of Claim 1 disclosed, taught or suggested by the references, as discussed above with respect to Claims 11 and 7. Again, for the sake of brevity the Applicants will summarize the previously presented arguments rather than repeating them in their entirety.

1. Overview of Claim 1

Claim 1 recites:

> A storage router for providing virtual local storage on remote storage devices to devices, comprising:
> a buffer providing memory work space for the storage router;
> a Fibre Channel controller operable to connect to and interface with a Fibre Channel transport medium;
> a SCSI controller operable to connect to and interface with a SCSI bus transport medium; and
> a supervisor unit coupled to the Fibre Channel controller, the SCSI controller and the buffer, the supervisor unit operable:
> to maintain a configuration for SCSI storage devices connected to the SCSI bus transport medium that maps between Fibre Channel devices and SCSI storage devices and that implements access controls for storage space on the SCSI storage devices; and

> to process data in the buffer to interface between the Fibre Channel controller and the SCSI controller to allow access from Fibre Channel initiator devices to SCSI storage devices using native low level, block protocols.

Thus, Claim 1 recites a "storage router" with a "supervisor unit" operable to maintain configuration data that "maps between Fibre Channel devices and SCSI storage devices," and "implements access controls for storage space on the SCSI storage devices," and ii) "allow access from Fibre Channel initiator devices to SCSI storage devices using NLLBP." As discussed above, these claimed features of the present invention allow each host connected to the first transport medium to access some portion of storage on the storage devices associated with that host using an NLLBP.

2. Petal Does Not Disclose "Allow[ing] Access" Using NLLBP

The present invention, in accordance with Claim 1, allows workstations (or other Fibre Channel initiator devices) to access SCSI storage devices using an NLLBP. An NLLBP, as discussed above is a set of rules or standards that enable computers to exchange information and do not involve the overhead of high level protocols and file systems typically required by network servers. Thus, the devices of Claim 1 connected to the Fibre Channel transport medium can access the SCSI storage devices using commands that do not require translation from a high level protocol to a low-level protocol.

The Examiner again relies on Petal for the rejection of this limitation of Claim 1. Petal, however, teaches a system in which a Petal client issues high level commands as an RPC in UDP packets. The RPC subsequently calls a function of the Petal server Unix operating system. The Petal server must then transform the RPC in UDP to generate the appropriate SCSI READ/WRITE commands. Thus, Petal uses a traditional RPC scheme that, like the prior art systems the invention of the '972 Patent was designed to overcome, involves the overhead of high level protocols typically used by traditional network servers. Consequently, the Petal server does not allow the Petal clients to access the storage devices using an NLLBP. Thus, Petal does not (and cannot) show a "supervisor unit" operable to "allow access from Fibre Channel initiator devices to SCSI storage devices" using NLLBPs.

With respect to the other references, the Examiner does not particularly point out where this feature of the present invention can be found in the other references. Therefore, Applicants respectfully request that the Examiner allow Claim 1.

3. Petal Does Not Disclose A "Map" Between Fibre Channel Devices SCSI Storage Devices

The "supervisor unit" of Claim 1 maps between devices located on one side of the storage router and the storage devices located on the other side of the storage router. This mapping is more than mere virtualization as the supervisor unit associates workstations or other Fibre Channel devices on one side of the storage router with particular SCSI storage devices.

The Examiner again relies on Petal in rejecting this limitation of Claim 1. Applicants respectfully submit, however, that Petal does not disclose, teach or suggest a supervisor unit that maps between Fibre Channel devices and SCSI storage devices. Rather, Petal teaches that a virtual to physical mapping of the storage itself (i.e., virtualization of the storage devices). There is no association made between the clients and storage devices (or portions thereof) in the mapping of Petal. In other words, there is no mechanism disclosed to say "this client device maps to that storage device" on the other side of the Petal server. Consequently, Petal teaches a virtualization scheme, not a mapping between Fibre Channel devices and storage devices.

Applicants further submit that Examiner has not pointed out where this feature of the present invention can be found in the other references and therefore has not made out a *prima facie* case of obviousness. Therefore, Applicants respectfully request withdrawal of the rejection and allowance of Claim 1.

4. Petal Does Not Disclose, Teach or Suggest The "Access Controls" Limitation Of Claim 1

As discussed above, the statement in Petal that "currently we do not provide any special support for protecting a client's data from other clients; however, it would not be difficult to provide security on a per virtual disk basis" is, at best, an 'invitation to try' to a security feature, and not necessarily providing "access controls" to allow access using NLLBPs on a per virtual disk basis. The statement does not by itself provide any teaching or suggestion as to how the "access controls" recited in Claim 1 can be achieved.

Thus, while it may have been 'obvious-to-try' a security feature based on the above-cited statement, one of ordinary skill in the art is left completely in the dark as to how such security feature would be achieved, much less how one would achieve "access controls" to allow access using NLLBPs as recited in Claim 1. As the cited case law points out, an invitation to try a feature is not enough in and of itself to render a claimed invention obvious.

Moreover, the Examiner has not pointed to any art or other evidence on the record such that one of skill in the art would have a reasonable expectation of success in implementing access controls for a UDP/ATM environment.

5. There Is No Showing That the Remainder Of The References Contain The Limitations Missing From Petal

The Examiner relies on Quam, Cummings, and Crouse in rejecting protocol and hardware specific features of the claimed invention. Applicants note, however, that the Examiner has not pointed out where these cited references make up for the deficiencies of Petal with respect to allowing access from a device connected to the first transport media to a storage device using a NLLBP, mapping, and access controls. As these features are not disclosed or taught in Petal, as discussed above, and are not pointed to in the other references, the burden of making out a *prima facie* case of obviousness has not been met. Therefore, Applicants respectfully request allowance of Claim 1.

6. Claim 2

Applicants respectfully submit that Claim 2 depends from Claim 1 and represents further limitations thereon. With respect to Claim 2, the claim recites that the "supervisor unit" maintains a configuration that "includes an allocation of subsets of storage space to associated Fibre Channel devices, wherein each subset is only accessible by the associated Fibre Channel device." As discussed above in conjunction with Claims 12 and 8, the access controls allocate subsets of storage to particular Fibre Channel devices (e.g., workstations). Applicants respectfully submit that Petal does not disclose, teach or suggest this feature of Claim 2 as Petal does not describe or suggest allocating storage devices or subsets of storage devices to particular clients. Therefore, Applicants respectfully request allowance of Claim 2.

E. Claims 2-6, 8-9 and 12-14

Applicants respectfully submit that Claims 2-6, 8-11 and 12-14 depend directly or indirectly from Claims 1, 7 and 11, respectively. Therefore, Applicants respectfully request allowance of these claims as representing further limitations on the respective independent claims and any intervening claims.

F. Summary: There is No *Prima Facie* Showing of Obviousness

Applicants respectfully submit that the Examiner has failed to establish a *prima facie* case of obviousness for Claims 1-14 as the prior art references do not disclose, teach or suggest all of the claim limitations. Specifically, the prior art cited by the Examiner does not appear to teach i) mapping between Fibre Channel devices and SCSI storage devices, ii) implementing access controls for the storage space on the SCSI storage devices and iii)

allowing access from Fibre Channel initiator devices to SCSI storage devices using a NLLBP. While the Examiner has provided a detailed discussion of Petal to attempt to show where these features are found, Applicants respectfully submit that Petal does not disclose, teach or suggest the claimed limitations. Furthermore, the remaining cited references (Quam, Cummings, Crouse and Pisello), alone or in combination, do not make up for the deficiencies in Petal. Accordingly, Applicants respectfully request allowance of Claims 1-14.

II. Conclusion

Applicants appreciate the Examiner's diligence in issuing thorough office actions in multiple reexamination cases so quickly. Applicants respectfully submit, however, that Claims 1-14 are distinguishable from the Petal, Quam, Cummings, Crouse and Pisello references. Therefore, Applicants respectfully request allowance of all claims subject to reexamination.

Applicant has now made an earnest attempt to place this case in condition for allowance. Other than as explicitly set forth above, this reply does not include an acquiescence to statements, assertions, assumptions, conclusions, or any combination thereof in the Office Action.

This Reply was served via First Class Mail on April 6, 2005 to Larry E. Severin, Wang, Hartmann & Gibbs, PC, 1301 Dove Street #1050, Newport Beach, CA 92660.

The Director of the U.S. Patent and Trademark Office is hereby authorized to charge any fees or credit any overpayments to Deposit Account No. 50-3183 of Sprinkle IP Law Group.

Respectfully submitted,

Sprinkle IP Law Group
Attorneys for Applicant

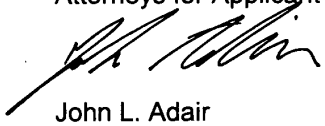

John L. Adair
Reg. No. 48,828

Date: **April 6, 2005**

1301 W. 25th Street, Suite 408
Austin, TX 78705
Tel. (512) 637-9223
Fax. (512) 371-9088

RECEIVED
MAR 1 0 2003
CLERK, U.S. DISTRICT COURT
WESTERN DISTRICT OF TEXAS
BY _____ DEPUTY CLERK

NOTE: Pursuant to Fed. Cir. R. 47.6, this disposition is not citable as precedent. It is a public record. This disposition will appear in tables published periodically.

United States Court of Appeals for the Federal Circuit

FILED
MAR 1 0 2003
CLERK, U.S. DISTRICT COURT
WESTERN DISTRICT OF TEXAS
BY _____ DEPUTY CLERK

02-1158

CROSSROADS SYSTEMS, (TEXAS), INC.,

Plaintiff-Appellee,

v.

CHAPARRAL NETWORK STORAGE, INC.,

Defendant-Appellant.

FILED
U.S. COURT OF APPEALS FOR
THE FEDERAL CIRCUIT

FEB 1 2 2003

JAN HORBALY
CLERK

JUDGMENT

ON APPEAL from the United States District Court for the Western District of Texas

In CASE NO(S). 00-CV-217 and 00-CV-621

This CAUSE having been heard and considered, it is

ORDERED and ADJUDGED: AFFIRMED. See Fed. Cir. R. 36

Per Curiam (NEWMAN, SCHALL, and DYK, Circuit Judges).

CERTIFIED COPY
I HEREBY CERTIFY THIS DOCUMENT
IS A TRUE AND CORRECT COPY
OF THE ORIGINAL ON FILE.
UNITED STATES COURT OF APPEALS
FOR THE FEDERAL CIRCUIT
By: _____ Date: 3/5/03

ENTERED BY ORDER OF THE COURT

DATED: FEB 1 2 2003

Jan Horbaly, Clerk

ISSUED AS A MANDATE: MARCH 5, 2003

Costs Against Appellant:
Total $97.35

186

03/17/2003 MON 12:47 [TX/RX NO 6273]

Received 07/27/2000 12:00 39:26 on line [7] for DB01961 printed 07/ JUU 12:13 * Pg 2/17

UNITED STATES DISTRICT COURT
WESTERN DISTRICT OF TEXAS
AUSTIN DIVISION

FILED
JUL 27 2000
U.S. DISTRICT COURT
BY CLERK'S OFFICE
DEPUTY

CROSSROADS SYSTEMS, (TEXAS), INC.	§	
	§	
vs.	§	NO. A 00 CA 217 SS
	§	
CHAPARRAL NETWORK STORAGE, INC.	§	

CROSSROADS SYSTEMS, (TEXAS), INC.	§	
	§	
vs.	§	NO. A 00 CA 248 SS
	§	
PATHLIGHT TECHNOLOGY, INC.	§	

ORDER

BE IT REMEMBERED that on the 25th day of July 2000 the Court, in accordance with *Markman v. Westview Instruments, Inc.*, 52 F.3d 967 (Fed. Cir. 1995), *aff'd*, 116 S. Ct. 1384 (1996), held a hearing at which the parties appeared by representation of counsel and made oral arguments on their proposed claims construction. At the hearing, the parties presented a Joint Stipulation of Claim Construction, indicating that the parties have agreed upon the definitions for seventeen terms and/or phrases in U.S. Patent No. 5,941,972 ("the '972 patent"), and that only ten terms and/or phrases in the '972 patent remain in dispute. After considering the briefs, the case file as a whole, and the applicable law, the Court enters the following opinion and order.

I. Standard for Claims Construction

The construction of claims, or the definition of the terms used in the claims, is a matter of law for the Court. When adopting a claim construction, the Court should first consider the intrinsic evidence, which includes the claims, the specification, and the prosecution history. *See Vitronics*

RECEIVED
FEB 07 2005
OFFICE OF PETITIONS

Oracle-Huawei-NetApp Ex. 1024, pg. 2173

Corp. v. Conceptronic, Inc., 90 F.3d 1576, 1582 (Fed. Cir. 1996) (explaining that intrinsic evidence is "the most significant source of the legally operative meaning of disputed claim language"). Not surprisingly, the starting point is always "the words of the claims themselves." *Id.; see also Comark Communications, Inc. v. Harris Corp.*, 156 F.3d 1182, 1186 (Fed. Cir. 1998). The words of the claims are generally given their ordinary and customary meaning, unless the patentee intended to use a "special definition of the term clearly stated in the patent specification or file history." *Vitronics*, 90 F.3d at 1582. Thus, the Court must review the specification and file history to determine whether the patentee intended to use any such "special" definitions. *See id.* The specification and file history may also be consulted as general guides for claim interpretation. *See Comark*, 156 F.3d at 1186.

The specification and file history, however, are not substitutes for the plain language of the claims. The specification is not meant to describe the full scope of the patent – it includes only a written description of the invention, sufficient to enable a person skilled in the art to make and use it, as well as the invention's "best mode." *See* 35 U.S.C. § 112. Thus, the claims may be broader than the specification, and generally should not be confined to the examples of the invention set forth in the specification. *See Comark*, 156 F.3d at 1187 ("Although the specification may aid the court in interpreting the meaning of disputed claim language, particular embodiments and examples appearing in the specification will not generally be read into the claims."). Indeed, the Federal Circuit has repeatedly emphasized that "limitations from the specification are not to be read into the claims." *Id.* at 1186.

In addition to examining the intrinsic evidence the Court may, in its discretion, receive extrinsic evidence regarding the proper construction of the patent's terms. *See Key Pharmaceuticals*

Oracle-Huawei-NetApp Ex. 1024, pg. 2174

v. Hercon Labs. Corp., 161 F.3d 709, 716 (Fed. Cir. 1998) ("[T]rial courts generally can hear expert testimony for background and education on the technology implicated by the presented claim construction issues, and trial courts have broad discretion in this regard."). The plaintiff has provided an expert affidavit and the defendant has provided excerpts from several dictionaries as extrinsic evidence concerning the construction of the terms of the '972 patent.

II. "implements access controls for storage space on the SCSI storage devices"

This phrase is used in claims 1, 10 and 11 of the '972 patent. The parties dispute whether the phrase refers to "access controls" only for certain subsections of a divided SCSI storage device, or whether it also includes limiting access to entire undivided SCSI storage devices. The plaintiff argues the phrase includes both kinds of access controls; the defendants say the phrase refers only to access controls for various subsections within a single divided SCSI storage device. The defendants also argue the plaintiff's construction is improper because, if adopted, it will result in the '972 patent being invalidated by prior art.

The plaintiff proposes the following definition: "provides controls which limit a computer's access to a specific subset of storage devices or sections of a single storage device." *See* Plaintiff's Brief, at 20. The defendants propose the phrase should be defined as "partitions the storage space on each one of the SCSI storage devices and defines the accessibility of each resulting partition." *See* Defendants' Brief, Ex. 2. The Court agrees with the plaintiff.

The intrinsic evidence of the '972 patent shows the plaintiff's invention is intended to restrict access both to subsections of a SCSI storage device, as well as to entire, undivided SCSI devices. First, the plain language of this phrase refers only to "storage space" and does not limit the space

Oracle-Huawei-NetApp Ex. 1024, pg. 2175

only to subsections of a divided SCSI storage device. Second, Figure 3 of the '972 patent supports a broad reading of this phrase. Figure 3 shows three SCSI storage devices, two of which are undivided (60 and 64). The third device (62) is divided into four subsections of storage space. From the simple labeling on Figure 3, it is clear that the entire, undivided storage device (64) is meant to be accessed only by a single workstation (computer E). Thus, Figure 3 expressly shows that the plaintiff's invention contemplates using "access controls" for an entire, undivided storage device as well as for the divided subsections within a single storage device.[1] Third, the language of the specification expressly describes limiting access to an entire, undivided SCSI storage device. Specifically, in referring to Figure 3, the specification states "storage device 64 can be allocated as storage for the remaining workstation 58 (workstation E)." *See* '972 Patent, at 4:20 - 4:21. At the hearing, the defendants' counsel argued that, simply because Figure 3 describes this feature does not mean the feature was intended to be part of the claimed invention. The Court soundly rejects this argument. Figure 3 is meant to be an example of how the plaintiff's claimed invention can be implemented, and the specification clearly describes this figure as illustrating one implementation of the claimed invention. Adopting the defendants' argument would ignore a fundamental principle of claims construction, oft repeated in the defendants' brief and oral arguments, that the specification is "the single best guide to the meaning of a disputed term." *See Vitronics*, 90 F.3d at 1582. Finally, the defendants correctly point out that the specification also refers to the single, undivided storage device (64) as a "partition (i.e., logical storage definition)." *See* '972 Patent, at 4:44 - 4:47. Rather than compel the defendants' proposed construction, however, this language supports the plaintiff's

[1] Figure 3 also discloses – and the defendants do not dispute – that the plaintiff's invention contemplates limiting access to various subsections of the divided SCSI storage device (62).

argument at the hearing that a discrete unit of storage – whether an entire SCSI storage device or a subsection within that device – can be referred to as a "partition."[2]

The defendants also argue that, even if the intrinsic evidence supports the plaintiff's proposed definition, this definition is nonetheless improper because it would cause the '972 patent to read directly upon prior art (and therefore be invalid). It is true that "claims should be read in a way that avoids ensnaring prior art if it is possible to do so." *Harris Corp. v. IXYS Corp.*, 114 F.3d 1149, 1153 (Fed. Cir. 1997). However, the defendants have not shown that the prior art at issue – the Lui patent – would be "ensnared" by adopting the plaintiff's definition. Importantly, the Lui patent was part of the prior art expressly considered by the patent examiner before granting the '972 patent. The patent examiner apparently did not use the Lui patent to reject a single claim in the '972 patent. The patent examiner also did not issue an Office Action requiring the plaintiff to distinguish its invention from the Lui patent on access control (or any other) grounds. Although the Patent Office is not the model of efficiency or thoroughness, its failure to cite the Lui patent as potentially invalidating prior art creates a strong presumption that the Lui patent does not read upon the plaintiff's claimed invention. In addition, it does not appear to the Court that the Lui patent reads upon the '972 claimed invention. While the Lui patent does disclose a system of Fibre Channel computers and SCSI storage devices, *see* Defendants' Brief, Ex. 6, at 2:53 - 2:65, the similarities end there. The Lui patent concerns an invention of "bypass circuits" used to "prevent the failure of any device" in the system. *See id.*, at Abstract. The invention of the Lui patent is not concerned with the swift transfer of information across a router, and thus does not disclose techniques for mapping,

[2] The Court expressly notes, however, that it is not defining the term "partition" in this order, as that term is not used in the '972 claim language.

implementing access controls, or a memory buffer.[3] At the hearing, the defendants' counsel suggested that Figure 2 of the Lui patent discloses the claimed invention of the '972 patent. However, Figure 2 of the Lui patent is not a part of the Lui invention; rather it is an illustration of a "conventional" network system that the Lui invention allegedly improves upon. *See id.* at 3:66. The Court rejects the defendants' argument that "conventional" network systems also read directly upon the '972 claimed invention. The patent examiner may have let one piece of prior art slip by; he or she would not have missed a "conventional" network system directly applicable to the plaintiff's claimed invention.

In sum, the Court will adopt the plaintiff's proposed definition and construe the phrase "implements access controls" in the claims of the '972 patent to mean "provides controls which limit a computer's access to a specific subset of storage devices or sections of a single storage device."

III. "allocation of subsets of storage space to associated Fibre Channel devices, wherein each subset is only accessible by the associated Fibre Chanel device"

The dispute here is essentially the same as in the preceding section. This phrase is used in claims 2, 8 and 12 of the '972 patent. As it did with the "implements access controls . . ." phrase, the plaintiff argues the "allocation . . ." phrase means that specific Fibre Channel devices can be allocated storage space on subsections of a single SCSI storage device and on entire, undivided SCSI storage devices. The defendants stick to their general argument on this issue, and contend the phrase

[3] The defendants argue these features are "implicitly" found in the Lui specification and in any event were disclosed in other prior art. *See* Defendants' Brief, at 12 and n.1. The Court is not persuaded that these features are "implicitly" disclosed by the Lui patent, and the other prior art briefly referenced by the defendants makes no mention of combining that prior art with the invention of the Lui patent, or vice-versa.

means storage space can only be allocated on subsections of a single divided SCSI storage device. Both parties agree this storage space, however it is defined, can only be accessed by the specified Fibre Channel device(s).

The plaintiff's proposed definition is "subsets of storage space are allocated to specific Fibre Channel devices." *See* Plaintiff's Brief, at 26. The defendants say the phrase should be defined to mean "one or more partitions that are only accessible by a single Fibre Channel device." *See* Defendants' Brief, Ex. 2. For the reasons discussed in the preceding section, the Court adopts the plaintiff's proposed construction.

IV. "supervisor unit"

This term is used in claims 1, 2 and 10 of the '972 patent. The plaintiff contends this term should be defined as "a microprocessor programmed to process data in a buffer in order to map between Fibre Channel devices and SCSI devices and which implements access controls." *See* Plaintiff's Brief, at 25. The defendants argue the term should be defined as "an Intel 80960RP processor" with several specific features. *See* Defendants' Brief, Ex. 2.

The defendants argue their construction is mandated by the means-plus-function analysis of § 112(6) of the Patent Act, because the claims of the '972 patent do not adequately describe the "supervisor unit" to be used. *See* Defendants' Brief, at 15-17. The plaintiff argues that § 112(6) does not apply because the term "means" is not used with the term "supervisor unit" and because the term "supervisor unit" is adequately described by other claim language in the '972 patent. *See* Plaintiff's *Markman* Exhibits, at 35-39.

Section 112(6) of the Patent Act provides that when a claim refers to the "means for" a

Oracle-Huawei-NetApp Ex. 1024, pg. 2179

specific act, but fails to adequately describe these means, the means then must be defined by reference to the specification. *See* 35 U.S.C. § 112(6).[4] If the claim language at issue does not include the term "means," there is a presumption that the § 112(6) means-plus-function analysis does not apply. *See Al-Site Corp. v. VSI Int'l, Inc.*, 174 F.3d 1308, 1318 (Fed. Cir. 1999) ("[W]hen an element of a claim does not use the term 'means,' treatment as a means-plus-function claim element is generally not appropriate."). To overcome this presumption, the party seeking to apply § 112(6) must show the claim language at issue is purely functional and that other claim language does not adequately describe the disputed term. *See id.* ("[W]hen it is apparent that the element invokes purely functional terms, without the additional recital of specific structure or material for performing that function, the claim element may be a means-plus-function element despite the lack of express means-plus- function language."). From a review of the claim language as a whole, the Court agrees with the plaintiff that the term "supervisor unit" is not purely functional, but refers instead to a device that can perform the tasks specifically listed in the claim language of the '972 patent. Specifically, claims 1, 2 and 10 of the '972 patent describe a "supervisor unit" that can: (1) maintain and map the configuration of networked Fibre Channel and SCSI storage devices; (2) include in this configuration an allocation of specific storage space to specific Fibre Channel devices; (3) implement access controls for the SCSI storage devices; and (4) process data in the storage router's buffer to allow an exchange between the Fibre Channel and SCSI storage devices. *See* '972 Patent,

[4] Section 112(6) reads as follows: "An element in a claim for a combination may be expressed as a means or step for performing a specified function without the recital of structure, material, or acts in support thereof, and such claim shall be construed to cover the corresponding structure, material, or acts described in the specification and equivalents thereof." 35 U.S.C. § 112(6).

at Claims 1, 2 and 10. These are the same tasks described in the plaintiff's proposed definition. In addition, the specification expressly defines the "supervisor unit" as "a microprocessor" (a computer chip) and specifically as "a microprocessor for controlling operation of storage router 56 and to handle mapping and security access for requests between Fibre Channel 52 and SCSI bus 54." *See id.* at 5:7 - 5:10. However, neither the specification (nor the claim language) limits the '972 patent to the specific Intel computer chip referenced by the defendants. Although the defendants correctly point out that the Intel 80960 chip is the only computer chip expressly named in the '972 patent and the specification describes many features this chip, the defendants fail to note that the Intel 80960 chip is listed as only "one implementation" of the claimed invention's microprocessor. *See* '972 Patent, at 5:63. The defendants are attempting exactly what the Federal Circuit prohibits – to limit the claims to the preferred embodiment and examples of the specification. "This court has cautioned against limiting the claimed invention to preferred embodiments or specific examples in the specification." *Comark*, 156 F.3d at 1186 (quoting *Texas Instruments, Inc. v. United States Int'l Trade Comm'n*, 805 F.2d 1558, 1563 (Fed. Cir. 1988)). The Court will not use an example of "one implementation" in the specification to limit the plain language of the claims. Accordingly, the Court adopts the plaintiff's definition of "supervisor unit" and will construe that term as used in the claims of the '972 patent to mean "a microprocessor programmed to process data in a buffer in order to map between Fibre Channel devices and SCSI devices and which implements access controls."

V. "SCSI storage devices"

This term is used in claims 1, 4, 7, 9-11 and 14 of the '972 patent. The plaintiff argues that this term essentially needs no further definition because the term SCSI is so well-known in the industry, but proposes that the term can be further defined as "any storage device including, for

example, a tape drive, CD-ROM drive, or a hard disk drive that understands the SCSI protocol and can communicate using the SCSI protocol." *See* Plaintiff's Brief, at 18. The defendants argue the term should be defined as "any storage device that uses a SCSI standard and has a unique BUS:TARGET:LUN address." *See* Defendants' Brief, Ex. 2.

The Court agrees with the plaintiff. Essentially, the defendants contend their narrow definition should be used because it "comports with '972 specification" and its discussion of SCSI storage devices. *See* Defendant's Brief, at 14. However, the specification language referred to by the defendants is only one example of how the SCSI storage device addressing scheme "can" be represented. *See* '972 Patent, at 7:39. Again, the defendants are impermissibly trying to limit the claim language to an example given in the specification. *See Comark*, 156 F.3d at 1186-87. For the sake of extra clarity, the Court will adopt the plaintiff's proposed definition for this term.

VI. "process data in the buffer"

This phrase is used in claims 1 and 10 of the '972 patent. The plaintiff argues the phrase is adequately defined on its own and by the surrounding claim language. The defendants contend the phrase should be defined as "to manipulate data in the buffer in a manner to (a) achieve mapping between Fibre Channel and SCSI devices, and (b) apply access controls and routing functions." *See* Defendants' Brief, Ex. 2.

The plain language of claims 1 and 10 disclose that the supervisor unit (the microprocessor) processes data in the buffer "to interface between the Fibre Channel controller and the SCSI controller to allow access from Fibre Channel initiator devices to SCSI storage devices using the native low level, block protocol in accordance with the configuration." *See* '972 Patent, at Claims 1 and 10. This language adequately describes what it means to "process data in the buffer" for these

claims. Simply because the specification may use slightly different language to describe this "processing," *see id.* at 5:18 - 5:20, does not entitle the defendants to adopt the specification language over the plain language of the claims. The Court will not further define this phrase.

VII. "storage router"

This term is used in claims 1-7 and 10 of the '972 patent. The plaintiff argues the term needs no further definition for claims 1-6, and for claim 7 it should be defined as "a device which provides virtual local storage, maps, implements access controls, and allows access using native low level block protocols." *See* Plaintiff's Brief, at 27. The defendants contend the term should mean "a bridge device that connects a Fibre Channel link directly to a SCSI bus and enables the exchange of SCSI command set information between application clients on SCSI bus devices and the Fibre Channel links." *See* Defendants' Brief, Ex. 2.

The defendants do not make any argument for their proposed definition in their brief, and did not discuss the term at the July 25 hearing. In their notebook of exhibits presented at the hearing, the defendants include one page which supports their definition with a quote from the specification. *See* Defendants' *Markman* Exhibits, "Markman Presentation" Tab, at 22. This argument is disingenuous. The specification language quoted by the defendants is immediately followed by several sentences further defining "storage router." Indeed, the next sentence begins "Further, the storage router applies access controls . . . ." *See* '972 Patent, at 5:30. The defendants' attempt to limit the term "storage router" to one of several descriptive sentences in the specification is not well-taken. In addition, the Court finds the term "storage router," as used in all claims of the '972 patent, is adequately described by the additional language of the claims, which discloses in detail the various functions and/or qualities of the storage router. The Court will not further define this term.

VIII. "map"

This term is used in claims 1, 7, 10 and 11 of the '972 patent. The plaintiff contends the term means "to create a path from a device on one side of the storage router to a device on the other side of the router, *i.e.* from a Fibre Channel device to a SCSI device (or vice-versa). A 'map' contains a representation of devices on each side of the storage router, so that when a device on one side of the storage router wants to communicate to a device on the other side of the storage router, the storage router can connect the devices." *See* Plaintiff's Brief, at 22. The defendants argue the term means "to translate addresses." *See* Defendants' Brief, Ex. 2.

In support of their definition, the defendants point only to a dictionary definition of "map." *See* Defendants' Brief, at 13 and Ex. 4. The plaintiff, on the other hand, cites to specific portions of the specification that support its definitions of map (both as a verb and a noun) as used in the claims of the '972 patent. *See* Plaintiff's Brief, at 22 (citing '972 Patent, at 1:66 - 2:5 and 6:65 - 7:6). Because intrinsic evidence is far more salient than a dictionary definition, and because the Court agrees that the specification language cited by the plaintiff supports its construction of the term "map," the Court will adopt the plaintiff's proposed definition of this term.

IX. "Fibre Channel protocol unit" and "SCSI protocol unit"

These terms are used in claims 5 and 6 of the '972 patent. The plaintiff contends these phrases should be defined as "a portion of the Fibre Channel controller which connects to the Fibre Channel transport medium" and "a portion of the SCSI controller which interfaces to the SCSI bus." *See* Plaintiff's Brief, at 27. The defendants say the terms mean "block and equivalents thereof that connects to the Fibre Channel transport medium" and "block and equivalents thereof that connects to the SCSI bus transport medium." *See* Defendants' Brief, Ex. 2.

Oracle-Huawei-NetApp Ex. 1024, pg. 2184

The defendants argue the means-plus-function analysis of § 112(6) should apply here because the terms are well-known and are not defined in two dictionaries cited by the defendants. *See* Defendants' Brief, at 7-8, 14-15, Ex. 4 and Ex. 5. However, the defendants do not indicate how the term should be defined in reference to the specification, and in fact contend "the '972 specification fails to reveal any structure corresponding to the claimed function." *See id.* at 8 and 15. The defendants then propose the word "block" should be used to describe these terms because the "protocol units" are "simply depicted as a block within the diagram of Figure 5" of the '972 patent. *See id.* This reasoning is wholly unpersuasive. Simply because a figure in the patent physically depicts the protocol units in a block-like shape, it does not follow that the units should be defined as "blocks or equivalents thereof." Under that reasoning, the SCSI storage devices, which are physically depicted as cylinders in the '972 patent, could be defined simply as "cylinders, oil drums or monkey barrels, or equivalents thereof." As the plaintiff correctly points out, the language of claims 5 and 6 plainly states that the "protocol units" for both devices are part of the "controllers" for the devices, and are intended to "connect" the devices to various "transport media" (*i.e.*, to various cables). *See* '972 Patent, at Claims 5 and 6. Accordingly, the Court adopts the plaintiff's definitions for these terms, and will construe the terms to mean "a portion of the Fibre Channel controller which connects to the Fibre Channel transport medium" and "a portion of the SCSI controller which interfaces to the SCSI bus."

X. "interface"

In their Joint Stipulation of Claim Construction, the parties claim the meaning of the term "interface" is in dispute. However, this phrase is not discussed in any of the parties' briefs, and neither side presented an argument at the July 25 hearing as to why the term is disputed. This term

has a standard and ordinary meaning – even to a federal judge – and the Court will not further define it.

XI. Undisputed Terms

Finally, in their Joint Stipulation of Claim Construction, the parties have stipulated to the construction of 17 other terms in the '972 patent. The Court will therefore adopt these stipulated constructions, solely for the purpose of this lawsuit.

Accordingly, the Court enters the following order:

IT IS ORDERED that the attached construction of the patent claims will be incorporated into any jury instructions given in this cause and will be applied by the Court in ruling on the issues raised in summary judgment.

SIGNED on this 26th day of July 2000.

UNITED STATES DISTRICT JUDGE

Oracle-Huawei-NetApp Ex. 1024, pg. 2186

Received 01/27/2000 12:00 ... 12:15 Pg 16/17

CONSTRUCTION OF CLAIMS
U.S. PATENT NO. 5,941,972

Disputed Terms

The phrase "implements access controls for storage space on the SCSI storage devices" means provides controls which limit a computer's access to a specific subset of storage devices or sections of a single storage device.

The phrase "allocation of subsets of storage space to associated Fibre Channel devices, wherein each subset is only accessible by the associated Fibre Chanel device" means subsets of storage space are allocated to specific Fibre Channel devices.

A "supervisor unit" is a microprocessor programmed to process data in a buffer in order to map between Fibre Channel devices and SCSI devices and which implements access controls.

A "SCSI storage device" is any storage device including, for example, a tape drive, CD-ROM drive, or a hard disk drive that understands the SCSI protocol and can communicate using the SCSI protocol.

The term "map" means to create a path from a device on one side of the storage router to a device on the other side of the router, *i.e.* from a Fibre Channel device to a SCSI device (or vice-versa). A "map" contains a representation of devices on each side of the storage router, so that when a device on one side of the storage router wants to communicate with a device on the other side of the storage router, the storage router can connect the devices.

A "Fibre Channel protocol unit" is a portion of the Fibre Channel controller which connects to the Fibre Channel transport medium.

A "SCSI protocol unit" is a portion of the SCSI controller which interfaces to the SCSI bus.

Stipulated / Undisputed Terms

A "buffer" is a memory device that is utilized to temporarily hold data.

A "direct memory access (DMA) interface" is a device that acts under little or no microprocessor control to access memory for data transfer.

A "Fibre Channel" is a known high-speed serial interconnect, the structure and operation of which is described, for example, in Fibre Channel Physical and Signaling Interface (FC-PH), ANSI X3.230 Fibre Channel Arbitrated Loop (FC-AL), and ANSI X3.272 Fibre Channel Private Loop Direct Attach (FC-PLDA).

A "Fibre Channel controller" is a device that interfaces with a Fibre Channel transport medium.

A "Fibre Channel device" is any device, such as a computer, that understands Fibre Channel protocol and can communicate using Fibre Channel protocol.

"Fibre Channel protocol" is a set of rules that apply to Fibre Channel.

A "Fibre Channel transport medium" is a serial optical or electrical communications link that connects devices using Fibre Channel protocol.

A "first-in-first-out queue" is a multi-element data structure from which elements can be removed only in the same order in which they were inserted; that is, it follows a first in, first out (FIFO) constraint.

A "hard disk drive" is a well known magnetic storage media, and includes a SCSI hard disk drive.

An "initiator device" is a device that issues requests for data or storage.

"Maintain(ing) a configuration" means keep(ing) a modifiable setting of information.

A "native low level, block protocol" is a set of rules or standards that enable computers to exchange information and do not involve the overhead of high level protocols and file systems typically required by network servers.

A "SCSI" (Small Computer System Interface) is a high speed parallel interface that may be used to connect components of a computer system.

A "SCSI bus transport medium" is a cable consisting of a group of parallel wires (normally 68) that forms a communications path between a SCSI storage device and another device, such as a computer.

A "SCSI controller" is a device that interfaces with the SCSI bus transport medium.

"Virtual local storage" is a specific subset of overall data stored in storage devices that has the appearance and characteristics of local storage.

A "workstation" is a remote computing device that connects to the Fibre Channel, and may consist of a personal computer.

Oracle-Huawei-NetApp Ex. 1024, pg. 2188

This Page is Inserted by IFW Indexing and Scanning Operations and is not part of the Official Record

BEST AVAILABLE IMAGES

Defective images within this document are accurate representations of the original documents submitted by the applicant.

Defects in the images include but are not limited to the items checked:

- ☐ BLACK BORDERS
- ☐ IMAGE CUT OFF AT TOP, BOTTOM OR SIDES
- ☐ FADED TEXT OR DRAWING
- ☐ BLURRED OR ILLEGIBLE TEXT OR DRAWING
- ☐ SKEWED/SLANTED IMAGES
- ☐ COLOR OR BLACK AND WHITE PHOTOGRAPHS
- ☐ GRAY SCALE DOCUMENTS
- ☑ LINES OR MARKS ON ORIGINAL DOCUMENT
- ☐ REFERENCE(S) OR EXHIBIT(S) SUBMITTED ARE POOR QUALITY
- ☐ OTHER: _____

IMAGES ARE BEST AVAILABLE COPY.
As rescanning these documents will not correct the image problems checked, please do not report these problems to the IFW Image Problem Mailbox.

Re Exam

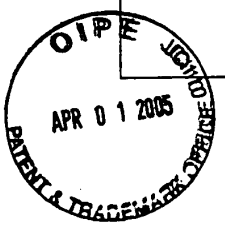

IN THE UNITED STATES PATENT AND TRADEMARK OFFICE	
NOTIFICATION UNDER 37 C.F.R. 1.565 **NOTIFICATION OF STAY**	Atty. Docket No. **CROSS1120-14**
Applicant **Geoffrey B. Hoese, et al.**	
Application Number **90/007,123**	Date Filed **07/19/2004**
Title **Storage Router and Method for Providing Virtual Local Storage**	
Group Art Unit **2182**	Examiner **Fleming, Fritz, M.**
Confirmation Number: **2293**	

Commissioner for Patents
P.O. Box 1450
Alexandria, VA 22313-1450

Certificate of Mailing Under 37 C.F.R. §1.8

I hereby certify that this correspondence is being deposited with the United States Postal Service as First Class Mail in an envelope addressed to Commissioner for Patents, P.O. Box 1450, Alexandria, VA 22312-1450 on **March 30, 2005**

Janice Pampell
Janice Pampell

Dear Sir:

This notification is filed for the sole purpose to inform the Examiner of status of the ongoing litigation involving United States Patent No. 5,941,972 (the "972 Patent') and United States Patent No. 6,425,035 (the "'035 Patent").

ONGOING LITIGATION

Attached hereto as Exhibit "A" is a March 17, 2005 Order from the United States District Court for the Western District of Texas. The Court ordered Crossroads to file a copy of this Order with the U.S. Patent Office in the reexamination proceedings involving U.S. Patents 5,941,972 and 6,425,035 B2.

This notification was served via first class mail on March 30, 2005 to:

Larry E. Severin
Wang, Hartmann & Gibbs, PC
1301 Dove Street, #1050
Newport Beach, CA 92660

Respectfully submitted,

Sprinkle IP Law Group
Attorneys for Applicant

John L. Adair
Reg. No. 48,828

Date: March 30, 2005
1301 W. 25th Street
Suite 408
Austin, Texas 78705
Tel. (512) 637-9220
Fax. (512) 371-9088

FILED
AUSTIN DIVISION
2005 MR 22 PM 2:03
WESTERN DISTRICT OF TEXAS
U.S. CLERK'S OFFICE
BY: AF
DEPUTY

IN THE UNITED STATES DISTRICT COURT
FOR THE WESTERN DISTRICT OF TEXAS
AUSTIN DIVISION

CROSSROADS SYSTEMS (TEXAS), INC.,
Plaintiff,

-vs-

Case No. A-03-CA-754-SS

DOT HILL SYSTEMS CORPORATION,
Defendant.

ORDER

BE IT REMEMBERED on the 17th day of March 2005, the Court called the above-styled cause for hearing on Defendant's Motion for a Limited Six-Month Abatement [#256]. Having considered the motion and response, the relevant law, the case file as a whole, and the arguments of counsel at the hearing, the Court now enters the following:

In this action, Plaintiff Crossroads Systems (Texas), Inc. ("Crossroads") sues Defendant Dot Hill Systems Corporation ("Dot Hill") for infringing the claims of two of its patents, United States Patent No. 5,941,972, entitled "Storage Router and Method for Providing Virtual Local Storage," and United States Patent No. 6,425,035 B2, which bears the same title and is a continuation of the '972 patent. Dot Hill now seeks a stay of the proceedings in this case based on reexaminations of the patents-in-suit that are currently taking place in the United States Patents and Trademark Office ("USPTO"). The Court has previously declined to stay this action because of its inability to predict the amount of time it will take the USPTO to conclude its reexamination proceedings.

267

SS
MP

03/23/2005 WED 15:52 [TX/RX NO 6412]

However, the Court is now advised the USPTO has issued an initial office action canceling all of the claims of the patents-in-suit. Although the uncertainty about the length of time it will take the USPTO to make a final determination on the claims of the patents-in-suit remains, the Court finds it appropriate to enter a short stay of the case to give it an opportunity to do so. After all, if the USPTO ultimately cancels all of the claims in the patents, Crossroads would no longer have a basis for its infringement allegations. *Slip Track Sys., Inc. v. Metal Lite, Inc.*, 159 F.3d 1337, 1341 (Fed. Cir. 1998) (noting that a stay may be justified when "the outcome of the reexamination would be likely to assist the court in determining patent validity and, if the claims were canceled in the reexamination, would eliminate the need to try the infringement issue."). Moreover, if the reexamination proceedings were to result in an amendment of the patent claims, the issues raised by the claim construction proceedings and pending motion for summary judgment could be substantially altered.

Thus, the Court agrees with Dot Hill that under the circumstances, a stay is justified in this case. Bearing in mind Crossroads's interest in moving this case forward, however, the Court declines to stay this case indefinitely, or even for six months, as requested. Instead, the Court considers it appropriate to stay the case from now until ninety (90) days following April 7, 2005 (the date on which Crossroads must file its answer to the USPTO's initial office action in the reexamination proceedings). The Court finds this period of time strikes the appropriate balance between the general interest in affording the USPTO an opportunity to reach a final determination on the status of the claims of the patents-in-suit, and the plaintiff's interest in moving the case forward.

03/23/2005 WED 15:52 [TX/RX NO 6412]

Oracle-Huawei-NetApp Ex. 1024, pg. 2193

Because the Court is convinced there is an appreciable probability that the issues in the now-pending motion for summary judgment will no longer require resolution by the Court at the conclusion of the reexamination proceedings, the Court will dismiss the motion without prejudice to the filing of a renewed motion for summary judgment on any and all live issues remaining at the conclusion of the stay.[1]

In accordance with the foregoing:

IT IS ORDERED that Defendant's Motion for Leave to Supplement its Motion for a Limited Six-Month Abatement [#263] is GRANTED;

IT IS FURTHER ORDERED that Defendant's Motion for a Limited Six-Month Abatement [#256] is GRANTED IN PART and DENIED IN PART as set forth herein;

IT IS FURTHER ORDERED that this case is STAYED until July 5, 2005;

IT IS FURTHER ORDERED that Plaintiff Crossroads shall file a copy of this order in the reexamination proceedings involving the patents-in-suit so that the USPTO may assign those proceedings as high a priority as the law, practicability, and justice will permit;

IT IS FURTHER ORDERED that Plaintiff Crossroads shall notify the Court of the status of the reexamination proceedings within ten (10) days of either the

---

[1] The Court notes the parties have already filed substantial amounts of paper with respect to the summary judgment issues. The Court also notes the parties have a tendency to submit duplicate copies of evidentiary submissions already on file whenever they file a new pleading. Since the file in this case appears to be growing unnecessarily thick, the Court would advise the parties of the following. In the event either the evidence or the arguments contained in the parties' now-moot summary judgment pleadings remain relevant to the issues in this case at the conclusion of the stay, the parties should feel free to incorporate them by specific reference in any post-stay pleadings they may ultimately file with the Court.

03/23/2005 WED 15:52 [TX/RX NO 6412]

Oracle-Huawei-NetApp Ex. 1024, pg. 2194

conclusion of the stay, or the date on which the USPTO issues a final determination in the reexamination proceedings, if a conclusion is reached prior to the expiration of the stay; and

IT IS FINALLY ORDERED that Defendant's Motion for Summary Judgment that U.S. Patent No. 6,425,035 and U.S. Patent No. 5,941,972 are Invalid Pursuant to 35 U.S.C. § 102 and/or 103 in View of the Prior Development of Digital Equipment Corporation HSZ70 Controller [#85] and Defendant's Request for Judicial Notice in Support of its Motion for Summary Judgment [#86] are DISMISSED WITHOUT PREJUDICE to refiling as set forth herein.

SIGNED this the 22nd day of March 2005.

SAM SPARKS
UNITED STATES DISTRICT JUDGE

03/23/2005 WED 15:52 [TX/RX NO 6412]

Oracle-Huawei-NetApp Ex. 1024, pg. 2195

Reexam

IN THE UNITED STATES PATENT AND TRADEMARK OFFICE	
CERTIFICATE OF SERVICE UNDER 37 C.F.R. 1.248	Atty. Docket No. **CROSS1120-14**

Applicant **Geoffrey B. Hoese, et al.**	
Application Number **90/007,123**	Date Filed **07/19/2004**
Title **STORAGE ROUTER AND METHOD FOR PROVIDING VIRTUAL LOCAL STORAGE**	
Group Art Unit **2182**	Examiner **Fleming, Fritz**
Confirmation Number: **2293**	

Applicant hereby serves the Information Disclosure Statement, SBO8A and SBO8B forms, copies of references A1-A67, B1-B9 and C1-C38 and copies of References C39-C116, which are located on the attached CD-Rom, in the above referenced case to:

Larry E. Severin
Wang, Hartmann & Gibbs, PC
1301 Dove Street, #1050
Newport Beach, CA 92660

As per 35 U.S.C. §1.248 service is made via first class mail on March 24, 2005.

Respectfully submitted,

Sprinkle IP Law Group

John L. Adair
Reg. No. 48,828

Dated: March 24, 2005

1301 W. 25th Street, Suite 408
Austin, Texas 78705
Tel. (512) 637-9220
Fax. (512) 371-9088

Enclosures

IN THE UNITED STATES PATENT AND TRADEMARK OFFICE	
INFORMATION DISCLOSURE STATEMENT BY APPLICANTS	Atty. Docket No. (Opt.) **CROSS1120-14**

Applicant **Geoffrey B. Hoese, et al.**	
Application Number **90/007,123**	Date Filed **07/19/2004**
Title **STORAGE ROUTER AND METHOD FOR PROVIDING VIRTUAL LOCAL STORAGE**	
Group Art Unit **2182**	Examiner **Fleming, Fritz**
Confirmation Number: **2293**	

Commissioner for Patents
P.O. Box 1450
Alexandria, VA 22313

Certification Under 37 C.F.R. §1.8

I hereby certify that this document is being deposited with the United States Postal Service as First Class Mail in an envelope addressed to: Commissioner for Patents, P.O. Box 1450, Alexandria, VA 22313 on **March 24, 2005.**

Janice Pampell
Janice Pampell

Applicants respectfully request, pursuant to 37 C.F.R. §§ 1.555, 1.56, 1.97 and 1.98, that the art listed on the attached SBO8-A and SBO8-B forms be considered and cited in the examination of the above-identified reexamination application. Since the present Application was filed after June 30, 2003, a copy of any U.S. Patent and any U.S. Patent Application Publications cited on the attached SBO8-A form is not being submitted with this Information Disclosure Statement pursuant to the waiver of 37 C.F.R. § 1.98(a)(2)(i) by the U.S. Patent and Trademark Office. Several documents are included on the enclosed CD-Rom for the convenience of the Examiner. If the Examiner would like hard copies of these documents, we will gladly provide them.

Furthermore, pursuant to 37 C.F.R. §§ 1.97(g) and (h), no representation is made that a search has been made or that this art is material to patentability of the present application. Applicants respectfully submit that the claims of Applicants' above-referenced patent is patentably distinguishable from these references. Applicants respectfully request consideration of these references. The Commissioner is hereby authorized to charge any fees due, or refund any credit, to Deposit Account No. 50-3183 of Sprinkle IP Law Group for any fee under 37 C.F.R. §1.17.

Respectfully submitted,
Sprinkle IP Law Group
Attorneys for Applicants

John L. Adair
Reg. No. 48,828

Dated: March 24, 2005
1301 W. 25th Street, Suite 408
Austin, TX 78705
T. 512-637-9220 / F. 512-371-9088

PTO/SB/08A (04-03)

INFORMATION DISCLOSURE STATEMENT BY APPLICANT				Application Number	09/007,123
				Filing Date	07/19/2004
				First Named Inventor	Hoese, Geoffrey
				Group Art Unit	2182
				Examiner Name	Fleming, Fritz M.
Sheet	1	OF	3	Attorney Docket Number	CROSS1120-14

U.S. PATENT DOCUMENTS

Examiner Initials	Cite No.	Document Number		Publication Date MM-DD-YYYY	Name of Patentee or Applicant of Cited Document	Pages, Columns, Lines Where Relevant Passages or Figures Appear
		Number	Kind Code *(if known)*			
	A1	3,082,406		03/19/1963	L.D. Stevens	
	A2	4,092,732		05/30/1978	Ouchi	
	A3	4,695,948		09/22/1987	Blevins, et al.	
	A4	4,751,635		06/14/1988	Kret	
	A5	4,864,532		09/05/1989	Reeve, et al.	
	A6	4,947,367		08/07/1990	Chang, et al.	
	A7	5,072,378		12/10/1991	Manka	
	A8	5,163,131		11/10/1992	Row, et al.	
	A9	5,239,632		08/24/1993	Larner	
	A10	5,239,643		08/24/1993	Blount, et al.	
	A11	5,257,386		10/26/1993	Saito	
	A12	5,347,384		09/13/1994	McReynolds, et al.	
	A13	5,414,820		10/09/1995	McFarland, et al.	
	A14	5,423,044		06/06/1995	Sutton, et al.	
	A15	5,465,382		11/07/1995	Day, III, et al.	
	A16	5,530,845		06/25/1996	Hiatt, et al.	
	A17	5,535,352		07/09/1996	Bridges, et al.	
	A18	5,581,714		12/03/1996	Amini, et al.	
	A19	5,596,562		06/21/1997	Chen	
	A20	5,596,736		01/21/1997	Kerns	
	A21	5,598,541		01/28/1997	Malladi	
	A22	5,680,556		10/21/1997	Begun, et al.	
	A23	5,701,491		12/23/1997	Dunn, et al.	
	A24	5,712,976		01/27/1998	Falcon, et al.	
	A25	5,729,705		03/17/1998	Weber	
	A26	5,743,847		04/28/1998	Nakamura, et al.	
	A27	5,751,975		05/12/1998	Gillespie, et al.	
	A28	5,774,683		06/30/1998	Gulick	
	A29	5,845,107		12/01/1998	Fisch, et al.	
	A30	5,857,080		10/05/1999	Jander, et al.	
	A31	5,864,653		01/26/1999	Tavallaei, et al.	
	A32	5,867,648		02/02/1999	Foth, et al.	

INFORMATION DISCLOSURE STATEMENT BY APPLICANT				Application Number	09/007,123
				Filing Date	07/19/2004
				First Named Inventor	Hoese, Geoffrey
				Group Art Unit	2182
				Examiner Name	Fleming, Fritz M.
Sheet	2	OF	3	Attorney Docket Number	CROSS1120-14

U.S. PATENT DOCUMENTS

Examiner Initials	Cite No.	Document Number		Publication Date MM-DD-YYYY	Name of Patentee or Applicant of Cited Document	Pages, Columns, Lines Where Relevant Passages or Figures Appear
		Number	Kind Code *(if known)*			
	A33	5,884,027		03/16/1999	Garbus, et al.	
	A34	5,913,045		06/15/1999	Gillespie, et al.	
	A35	5,923,557		07/13/1999	Eidson	
	A36	5,941,969		08/24/1999	Ram, et al.	
	A37	5,941,972		08/24/1999	Hoese, et al.	
	A38	5,953,511		09/14/1999	Sescilia, et al.	
	A39	5,959,994		09/28/1999	Boggs, et al.	
	A40	5,974,530		10/26/1999	Young	
	A41	5,978,379		11/02/1999	Chan, et al.	
	A42	5,991,797		11/23/1999	Futral, et al.	
	A43	6,000,020		12/07/1999	Chin, et al.	
	A44	6,021,451		02/01/2000	Bell, et al.	
	A45	6,041,381		03/21/2000	Hoese	
	A46	6,065,087		05/16/2000	Keaveny, et al.	
	A47	6,070,253		01/26/1999	Tavallaei, et al.	
	A48	6,075,863		06/13/2000	Krishnan, et al.	
	A49	6,118,766		09/12/2000	Akers	
	A50	6,131,119		10/10/2000	Fukui	
	A51	6,134,617		10/17/2000	Weber	
	A52	6,141,737		10/31/2000	Krantz, et al.	
	A53	6,145,006		11/07/2000	Vishlitsky, et al.	
	A54	6,148,004		11/14/2000	Nelson, et al.	
	A55	6,209,023		03/27/2001	Dimitroff, et al.	
	A56	6,223,266		04/24/2001	Sartore	
	A57	6,230,218		05/08/2001	Casper, et al.	
	A58	6,260,120		07/10/2001	Blumenau, et al.	
	A59	6,330,629		12/11/2001	Kondo et al.	
	A60	6,341,315		01/22/2002	Arroyo, et al.	
	A61	6,343,324		01/29/2002	Hubis, et al.	
	A62	6,363,462		03/26/2002	Bergsten	
	A63	6,421,753		07/16/2002	Hoese, et al.	
	A64	6,425,035		07/23/2002	Hoese, et al.	
	A65	6,425,036		07/23/2002	Hoese, et al.	

INFORMATION DISCLOSURE STATEMENT BY APPLICANT				Application Number	09/007,123
				Filing Date	07/19/2004
				First Named Inventor	Hoese, Geoffrey
				Group Art Unit	2182
				Examiner Name	Fleming, Fritz M.
Sheet	3	OF	3	Attorney Docket Number	CROSS1120-14

U.S. PATENT DOCUMENTS

Examiner Initials	Cite No.	Document Number		Publication Date MM-DD-YYYY	Name of Patentee or Applicant of Cited Document	Pages, Columns, Lines Where Relevant Passages or Figures Appear
		Number	Kind Code *(if known)*			
	A66	6,484,245		11/19/2002	Sanada, et al.	
	A67	6,529,996		03/04/2003	Nguyen, et al.	

FOREIGN PATENT DOCUMENTS

Examiner Initials		Country Code	Number	Kind Code *(if known)*	Publication Date MM-DD-YYYY (Number 43)	Name of Patentee or Applicant of Cited Document	Pages, Columns, Lines Where Relevant Passages or Figures Appear
	B1	GB	2296798	A	07/10/1996	Spring Consultants Limited	
	B2	GB	2297636	A	08/07/1996	Spring Consultants Limited	
	B3	JP	8-230895		09/10/1996	Kikuchi, et al.	
	B4	EP	0810530	A2	12/03/1997	Sun Microsystems, Inc.	
	B5	EP	0827059	A2	03/04/1998	NEC Corporation	
	B6	WO	99/34297	A1	07/08/1999	Crossroads Systems, Inc.	
	B7	GB	2341715				
	B8	JP	6301607				
	B9	WO	98/36357		1998		

Examiner Signature		Date Considered	

FORM PTO 1449 US Department of Commerce Patent and Trademark Office				Application Number	90/007,123
				Filing Date	07/19/04
				First Named Inventor	Hoese, Geoffrey
				Group Art Unit	2182
				Examiner Name	Fleming, Fritz M.
Sheet	1	of	6	Atty Docket Number	CROSS1120-14

Examiner Initials	Cite No.	OTHER PRIOR ART -- NON PATENT LITERATURE DOCUMENTS	Date
	C1	Black Box, SCSI Fiberoptic Extender, Single-Ended, Product Insert, 2 pages, 1996.	6/18/05
	C2	Block-Based Distributed File Systems, Anthony J. McGregor, July 1997.	
	C3	Compaq Storageworks HSG80 Array Controller ACS Version 8.3 (Maintenance and Service Guide) 11/98	
	C4	Compaq Storageworks HSG80 Array Controller ACS Version 8.3 (Configuration and CLI Reference Guide) 11/98	
	C5	CRD-5500, RAID DISK ARRAY CONTROLLER Product Insert, pp. 1-5	
	C6	CRD-5500, SCSI RAID CONTROLLER OEM Manual, Rev. 1.3, February 26, 1996, pp. 1-54.	02/26/1996
	C7	CRD-5500, SCSI RAID Controller User's Manual CMD Technology, Inc. pp. 1-1 to 6-25, revised November 21, 1996	11/21/1996
	C8	DIGITAL StorageWorks, HSZ70 Array Controller, HSOF Version 7.0 EK-HSZ70-CG. A01, Digital Equipment Corporation, Maynard, Massachusetts.	
	C9	DIGITAL StorageWorks, Using Your HSZ70 Array Controller in a SCSI Controller Shelf (DS-BA356-M Series), User's Guide, pp. 1-1 through A-5 with index, January 1998.	01/01/1998
	C10	DIGITAL Storageworks HSG80 Array Controller ACS Version 8.0 (User's Guide) 1/98	
	C11	DIGITAL StorageWorks HSZ70 Array Controller HSOF Version 7.0 EK-HSZ70-SV. A01	
	C12	DIGITAL StorageWorks HSZ70 Array Controller HSOF Version 7.0 EK-HSZ70-RM.A01 CLI Reference Manual	
	C13	DP5380 Asynchronous SCSI Interface, National Semiconductor Corporation, Arlington, TX, May 1989, pp. 1-32	
	C14	Emerson, "Ancor Communications: Performance evaluation of switched fibre channel I/O system using--FCP for SCSI" February 1995, IEEE, pp. 479-484.	02/01/1995
	C15	IBM Technical Publication: Guide to Sharing and Partitioning IBM Tape Library Dataservers, November 1996, IBM, International Technical Support Organization, San Jose Center	11/01/1996
	C16	IBM Technical Publication: Magstar and IBM 3590 High Performance Tape Subsystem Technical Guide, November 1996, pp. 1-269.	11/01/1996
	C17	InfoServer 150VXT Photograph	
	C18	Infoserver 100 System Operations Guide, First Edition Digital Equipment Corporation, 1990	
	C19	"InfoServer 150--Installation and Owner's Guide", EK-INFSV-OM-001, Digital Equipment Corporation, Maynard, Massachusetts 1991, Chapters 1 and 2	

FORM PTO 1449 US Department of Commerce Patent and Trademark Office				Application Number	90/007,123
				Filing Date	07/19/2004
				First Named Inventor	Hoese, Geoffrey
				Group Art Unit	2182
				Examiner Name	Fleming, Fritz M.
Sheet	2	of	6	Atty Docket Number	CROSS1120-14

Examiner Initials	Cite No.	OTHER PRIOR ART -- NON PATENT LITERATURE DOCUMENTS	Date
	C20	Johnson, D.B., et al., The Peregrine High Performance RPC System", Software-Practice and Experience, 23(2):201-221, Feb. 1993	
	C21	S.P. Joshi, "Ethernet controller chip interfaces with variety of 16-bit processors," electronic Design, Hayden Publishing Co., Inc., Rochelle Partk, NJ, October 14, 1982. pp 193-200	
	C22	Misc. Reference Manual Pages, SunOS 5.09.	
	C23	Pictures of internal components of the InfoServer 150, taken from http://bindarydinosaurs.couk/Museum/Digital/infoserver/infoserver.php in Nov. 2004.	
	C24	Raidtec FibreArray and Raidtec FlexArray UltraRAID Systems", Windows IT PRO Article, October 1997.	
	C25	"Simplest Migration to Fibre Channel Technology" Article, Digital Equipment Corporation, November 10, 1997, published on PR Newswire	11/10/1997
	C26	Office Action dated 01/21/03 for 10/174,720 (CROSS1120-8).	01/21/03
	C27	Office Action dated 02/27/01 for 09/354,682 (CROSS1120-1).	02/27/01
	C28	Office Action dated 08/11/00 for 09/354,682 (CROSS1120-1).	08/11/00
	C29	Office Action dated 12/16/99 for 09/354,682 (CROSS1120-1).	12/16/1999
	C30	Office Action dated 11/06/02 for 10/023,786 (CROSS1120-4).	11/06/2002
	C31	Office Action dated 01/21/03 for 10/081,110 (CROSS1120-5).	01/21/2003
	C32	Office Action dated 1/27/2005 in 10/658,163 (CROSS1120-13).	01/27/2005
	C33	Office Action in Ex Parte Reexamination 90/007,127, mailed 02/07/05.	02/07/2005
	C34	Office Action in Ex Parte Reexamination 90/007,126, mailed 02/07/05.	02/07/2005
	C35	Office Action in Ex Parte Reexamination 90/007,125, mailed 02/07/05.	02/07/2005
	C36	Office Action in Ex Parte Reexamination 90/007,124, mailed 02/07/05.	02/07/2005
	C37	Office Action in Ex Parte Reexamination 90/007,123, mailed 02/07/05.	02/07/2005
	C38	European Office Action issued April 1, 2004 in Application No. 98966104.6-2413	04/01/2004
		Copies of the following are on the attached CD-Rom	
	C39	Defendant's First Supplemental Trial Exhibit List, Crossroads Systems, Inc., v. Chaparral Network Storage, Inc., C.A. No. A-00CA-217-SS (W.D. Tex. 2001). **(CD-Rom)**.	
	C40	Defendant's Third Supplemental Trial Exhibit List, Crossroads Systems, Inc. v. Pathlight Technology, Inc., C.A. No. A-00CA-248-SS (W.D. Tex. 2001) **(CD-Rom)**.	
	C41	Defendant's Trial Exhibits, Crossroads Systems, Inc. v. Pathlight Technology, Inc., C.A. No. A-00CA-248-SS (W.D. Tex. 2001). **(CD-Rom)**.	
	C42	Defendants' Trial Exhibits, Crossroads Systems, Inc., v. Chaparral Network Storage, Inc., C.A. No. A-00CA-217-SS (W.D. Tex. 2001). **(CD-Rom)**.	
	C43	Defendant Chaparral Network Storage, Inc.'s First Supplemental Trial Exhibit List (D1 through D271) (**CD-ROM** Chaparral Exhibits ExList_Def).	9/2/2001

FORM PTO 1449 US Department of Commerce Patent and Trademark Office				Application Number	90/007,123
				Filing Date	07/19/2004
				First Named Inventor	Hoese, Geoffrey
				Group Art Unit	2182
				Examiner Name	Fleming, Fritz M.
Sheet	3	of	6	Atty Docket Number	CROSS1120-14

Examiner Initials	Cite No.	OTHER PRIOR ART -- NON PATENT LITERATURE DOCUMENTS	Date
	C44	Defendant Pathlight Technology Inc.'s Third Supplemental Trial Exhibit List (CD-ROM Pathlight Exhibits ExList_Def).	
	C45	Plaintiff's Fourth Amended Trial Exhibit List, Crossroads Systems, Inc. v. Chaparral Network Storage, Inc, C.A. No. A-00CA-217-SS (W.D. Tex. 2001) **(CD-Rom)**.	9/11/2001
	C46	Plaintiff's Revised Trial Exhibit List, Crossroads Systems, Inc. v. Pathlight Technology, Inc., C.A. No. A-00CA-248-SS (W.D. Tex. 2001). **(CD-Rom)**.	
	C47	Plaintiff's Trial Exhibits, Crossroads Systems, Inc. v. Chaparral Networks Storage, Inc., C.A. No. A-00CA-217-SS (W.D. Tex. 2001). **(CD-Rom)**.	
	C48	Plaintiff's Fourth Amended Trial Exhibit List (**CD-ROM** Chaparral Exhibits ExList_Plaintiff).	9/11/2001
	C49	Plaintiff's Revised Trial Exhibit List (**CD-ROM** Pathlight Exhibits ExList_Plaintiff).	
	C50	Trial Transcripts, Crossroads Systems, Inc. v. Chaparral Network Storage, Inc., C.A. No. A-00CA-217-SS (W.D. Tex. 2001) **(CD-Rom)**.	
	C51	Trial Transcripts, Crossroads Systems, Inc. v. Pathlight Technology, Inc., C.A. No. A-00CA-248-SS (W.D. Tex. 2001). **(CD-Rom)**.	
	C52	Trial Exhibits and Transcripts, Crossroads v. Chaparral, Civil Action No. A-00CA-21755, W.D. Tex. 2000 (**CD-Rom** and hard copy printouts).	
	C53	Snively, "Sun Microsystem Computer Corporation: Implementing a fibre optic channel SCSI transport" 1994 IEEE, February 28, 1994, pp. 78-82.	02/28/1994
	C54	Datasheet for CrossPoint 4100 Fibre Channel to SCSI Router (Dedek Ex 41 (ANCT 117-120)) (**CD-ROM** Chaparral Exhibits D012).	
	C55	Symbios Logic- Software Interface Specification Series 3 SCSI RAID Controller Software Release 02.xx (Engelbrecht Ex 2 (LSI 1421-1658)) (**CD-ROM** Chaparral Exhibits D013).	12/3/1997
	C56	Press Release- Symbios Logic to Demonstrate Strong Support for Fibre Channel at Fall Comdex (Engelbrecht 12 (LSI 2785-86)) (**CD-ROM** Chaparral Exhibits D016).	11/13/1996
	C57	OEM Datasheet on the 3701 Controller (Engelbrecht 13 (LSI 01837-38)) (**CD-ROM** Chaparral Exhibits D017).	6/17/1905
	C58	Nondisclosure Agreement Between Adaptec and Crossroads Dated 10/17/96 (Quisenberry Ex 25 (CRDS 8196)) (**CD-ROM** Chaparral Exhibits D020).	10/17/1996
	C59	Organizational Presentation on the External Storage Group (Lavan Ex 1 (CNS 182242-255)) (**CD-ROM** Chaparral Exhibits D021).	4/11/1996
	C60	Bridge. C, Bridge Between SCSI-2 and SCSI-3 FCP (Fibre Channel Protocol) (**CD-ROM** Chaparral Exhibits P214).	
	C61	Bridge Phase II Architecture Presentation (Lavan Ex 2 (CNS 182287-295)) (**CD-ROM** Chaparral Exhibits D022).	4/12/1996
	C62	Attendees/Action Items from 4/12/96 Meeting at BTC (Lavan Ex 3 (CNS 182241)) (**CD-ROM** Chaparral Exhibits D023).	4/12/1996

FORM PTO 1449 US Department of Commerce Patent and Trademark Office				Application Number	90/007,123
				Filing Date	07/19/2004
				First Named Inventor	Hoese, Geoffrey
				Group Art Unit	2182
				Examiner Name	Fleming, Fritz M.
Sheet	4	of	6	Atty Docket Number	CROSS1120-14

Examiner Initials	Cite No.	OTHER PRIOR ART -- NON PATENT LITERATURE DOCUMENTS	Date
	C63	Brooklyn Hardware Engineering Requirements Documents, Revision 1.4 (Lavan Ex 4 (CNS 178188-211)) (**CD-ROM** Chaparral Exhibits D024) by Pecone.	5/26/1996
	C64	Brooklyn Single-Ended SCSI RAID Bridge Controller Hardware OEM Manual, Revision 2.1 (Lavan EX 5 (CNS 177169-191)) (**CD-ROM** Chaparral Exhibits D025).	3/21/1996
	C65	Coronado Hardware Engineering Requirements Document, Revision 0.0 (Lavan Ex 7 (CNS 176917-932)) (**CD-ROM** Chaparral Exhibits D027) by O'Dell.	9/30/1996
	C66	ESS/FPG Organization (Lavan Ex 8 (CNS 178639-652)) (**CD-ROM** Chaparral Exhibits D028).	12/6/1996
	C67	Adaptec MCS ESS Presents: Intelligent External I/O Raid Controllers "Bridge" Strategy (Lavan Ex 9 (CNS 178606-638)). (**CD-ROM** Chaparral Exhibits D029).	2/6/1996
	C68	AEC-7313 Fibre Channel Daughter Board (for Brooklyn) Engineering Specification, Revision 1.0 (Lavan Ex 10 (CNS 176830-850)) (**CD-ROM** Chaparral Exhibits D030).	2/27/1997
	C69	Bill of Material (Lavan Ex 14 (CNS 177211-214)) (**CD-ROM** Chaparral Exhibits D034).	7/24/1997
	C70	AEC-. 4412B, AEC-7412/B2 External RAID Controller Hardware 0EM Manual, Revision 2.0 (Lavan Ex 15 (CNS 177082-123)) (**CD-ROM** Chaparral Exhibits D035).	6/27/1997
	C71	Coronado II, AEC-7312A Fibre Channel Daughter (for Brooklyn) Hardware Specification, Revision 1.2 (Lavan Ex 16 (CNS 177192-210)) (**CD-ROM** Chaparral Exhibits D037) by Tom Yang.	7/18/1997
	C72	AEC-4412B, AEC7412/3B External RAID Controller Hardware OEM Manual, Revision 3.0. (Lavan Ex 17 (CNS 177124-165)) (**CD-ROM** Chaparral Exhibits D036).	8/25/1997
	C73	Memo Dated 8/15/97 to AEC-7312A Evaluation Unit Customers re: B001 Release Notes (Lavan Ex 18 (CNS 182878-879)) (**CD-ROM** Chaparral Exhibits D038),	8/15/1997
	C74	Brooklyn Main Board (AES-0302) MES Schedule (Lavan Ex I9 (CNS 177759-763)) (**CD-ROM** Chaparral Exhibits D039).	2/11/1997
	C75	News Release-Adaptec Adds Fibre Channel Option to its External RAID Controller Family (Lavan Ex 20 (CNS 182932-934)) (**CD-ROM** Chaparral Exhibits D040).	5/6/1997
	C76	AEC-4412B/7412B User's Guide, Rev. A (Lavan Ex 21) (**CD-ROM** Chaparral Exhibits D041).	6/19/1905
	C77	Data Book- AIC-7895 PCI Bus Master Single Chip SCSI Host Adapter (Davies Ex 1 (CNS 182944-64)) (**CD-ROM** Chaparral Exhibits D046).	5/21/1996
	C78	Data Book- AIC-1160 Fibre Channel Host Adapter ASIC (Davies Ex 2 (CNS 181800-825)) (**CD-ROM** Chaparral Exhibits D047).	6/18/1905
	C79	Viking RAID Software (Davies Ex 3 (CNS 180969-181026)) (**CD-ROM** Chaparral Exhibits D048).	6/18/1905
	C80	Header File with Structure Definitions (Davies Ex 4 (CNS 180009-018)) (**CD-ROM** Chaparral Exhibits D049).	8/8/1996

FORM PTO 1449 US Department of Commerce Patent and Trademark Office				Application Number	90/007,123
				Filing Date	07/19/2004
				First Named Inventor	Hoese, Geoffrey
				Group Art Unit	2182
				Examiner Name	Fleming, Fritz M.
Sheet	5	of	6	Atty Docket Number	CROSS1120-14

Examiner Initials	Cite No.	OTHER PRIOR ART -- NON PATENT LITERATURE DOCUMENTS	Date
	C81	C++ SourceCode for the SCSI Command Handler (Davies Ex 5 (CNS 179136-168)) (**CD-ROM** Chaparral Exhibits D050).	8/8/1996
	C82	Header File Data Structure (Davies Ex 6 (CNS 179997-180008)) (**CD-ROM** Chaparral Exhibits D051).	1/2/1997
	C83	SCSI Command Handler (Davies Ex 7 (CNS 179676-719)) (**CD-ROM** Chaparral Exhibits D052).	1/2/1997
	C84	Coronado: Fibre Channel to SCSI Intelligent RAID Controller Product Brief (Kalwitz Ex I (CNS 182804-805)) (**CD-ROM** Chaparral Exhibits D053).	
	C85	Bill of Material (Kalwitz Ex 2 (CNS 181632-633)) (**CD-ROM** Chaparral Exhibits D054).	3/17/1997
	C86	Emails Dated 1/13-3/31/97 from P. Collins to Mo re: Status Reports (Kalwitz Ex 3 (CNS 182501-511)) (**CD-ROM** Chaparral Exhibits D055).	
	C87	Hardware Schematics for the Fibre Channel Daughtercard Coronado (Kalwitz Ex 4 (CNS 181639-648)) (**CD-ROM** Chaparral Exhibits D056).	
	C88	Adaptec Schematics re AAC-340 (Kalwitz Ex 14 CNS 177215-251)) (**CD-ROM** Chaparral Exhibits D057).	
	C89	Bridge Product Line Review (Manzanares Ex 3 (CNS 177307-336)) (**CD-ROM** Chaparral Exhibits D058).	
	C90	AEC Bridge Series Products-Adaptec External Controller RAID Products Pre-Release Draft, v.6 (Manzanares Ex 4 (CNS 174632-653)). (**CD-ROM** Chaparral Exhibits D059).	10/28/1997
	C91	Hewlett-Packard Roseville Site Property Pass for Brian Smith (Dunning Ex 14 (HP 489) (**CD-ROM** Chaparral Exhibits D078).	11/7/1996
	C92	Distribution Agreement Between Hewlett-Packard and Crossroads (Dunning Ex 15 (HP 326-33) (**CD-ROM** Chaparral Exhibits D079).	
	C93	HPFC-5000 Tachyon User's Manuel, First Edition (PTI 172419-839) (**CD-ROM** Chaparral Exhibits D084).	5/1/1996
	C94	X3T10 994D - (Draft) Information Technology: SCSI-3 Architecture Model, Rev. 1.8 (PTI 165977) (**CD-ROM** Chaparral Exhibits D087).	
	C95	X3T10 Project 1047D: Information Technology- SCSI-3 Controller Commands (SCC), Rev, 6c (PTI 166400-546) (**CD-ROM** Chaparral Exhibits D088).	9/3/1996
	C96	X3T10 995D- (Draft) SCSI-3 Primary Commands, Rev. 11 (Wanamaker Ex 5 (PTI 166050-229)) (**CD-ROM** Chaparral Exhibits D089).	11/13/1996
	C97	VBAR Volume Backup and Restore (CRDS 12200-202) (**CD-ROM** Chaparral Exhibits D099).	
	C98	Preliminary Product Literature for Infinity Commstor's Fibre Channel to SCSI Protocol Bridge (Smith Ex 11; Quisenberry Ex 31 (SPLO 428-30) (**CD-ROM** Chaparral Exhibits D143).	8/19/1996
	C99	Letter dated 7/12/96 from J. Boykin to B. Smith re: Purchase Order for Evaluation Units from Crossroads (Smith Ex 24) CRDS 8556-57) (**CD-ROM** Chaparral Exhibits D144).	7/12/1996
	C100	CrossPoint 4100 Fibre Channel to SCSI Router Preliminary Datasheet (Hulsey Ex 9 (CRDS 16129-130)) (**CD-ROM** Chaparral Exhibits D145).	11/1/1996

FORM PTO 1449 US Department of Commerce Patent and Trademark Office				Application Number	90/007,123
				Filing Date	07/19/2004
				First Named Inventor	Hoese, Geoffrey
				Group Art Unit	2182
				Examiner Name	Fleming, Fritz M.
Sheet	6	of	6	Atty Docket Number	CROSS1120-14

Examiner Initials	Cite No.	OTHER PRIOR ART -- NON PATENT LITERATURE DOCUMENTS	Date
	C101	CrossPoint 4400 Fibre Channel to SCSI Router Preliminary Datasheet (Bardach Ex. 9, Quisenberry Ex 33 (CRDS 25606-607)) (**CD-ROM** Chaparral Exhibits D153).	11/1/1996
	C102	Fax Dated 07/22/96 from L. Petti to B. Smith re: Purchase Order from Data General for FC2S Fibre to Channel SCSI Protocol Bridge Model 11 (Smith Ex 25; Quisenberry Ex 23; Bardach Ex 11 (CRDS 8552-55; 8558) (**CD-ROM** Chaparral Exhibits D155).	
	C103	Email Dated 12/20/96 from J. Boykin to B. Smith re: Purchase Order for Betas in February and March (Hoese Ex 16, Quisenberry Ex 25; Bardach Ex 12 (CRDS 13644-650) (**CD-ROM** Chaparral Exhibits D156).	
	C104	Infinity Commstor Fibre Channel Demo for Fall Comdex, 1996 (Hoese Ex 15, Bardach Ex 13 (CRDS 27415) (**CD-ROM** Chaparral Exhibits D157).	
	C105	Fax Dated 12/19/96 from B. Bardach to T. Rarich re: Purchase Order Information (Bardach Ex. 14; Smith Ex 16 (CRDS 4460)) (**CD-ROM** Chaparral Exhibits D158).	
	C106	Miscellaneous Documents Regarding Comdex (Quisenberry Ex 2 (CRDS 27415-465)) (**CD-ROM** Chaparral Exhibits D165).	
	C107	CrossPoint 4100 Fibre Channel to SCSI Router Preliminary Datasheet (Quisenberry) Ex 3 (CRDS 4933-34) (**CD-ROM** Chaparral Exhibits D166) (CD-ROM Chaparral Exhibits D166).	
	C108	CrossPoint 4400 Fibre to Channel to SCSI Router Preliminary Datasheet; Crossroads Company and Product Overview (Quisenberry Ex 4 (CRDS 25606; 16136)) (**CD-ROM** Chaparral Exhibits D167).	
	C109	Crossroads Purchase Order Log (Quisenberry Ex 9 (CRDS 14061-062)) (**CD-ROM** Chaparral Exhibits D172).	
	C110	RAID Manager 5 with RDAC 5 for UNIX V.4 User's Guide (LSI-01854) (**CD-ROM** Chaparral Exhibits P062).	9/1/1996
	C111	Letter dated May 12, 1997 from Alan G. Leal to Barbara Bardach enclosing the original OEM License and Purchase Agreement between Hewlett-Package Company and Crossroads Systems, Inc. (CRDS 02057) (**CD-ROM** Chaparral Exhibits P130).	
	C112	CR4x00 Product Specification (CRDS 43929) (**CD-ROM** Chaparral Exhibits P267).	6/1/1998
	C113	Symbios Logic – Hardware Functional Specification for the Symbios Logic Series 3 Fibre Channel Disk Array Controller Model 3701 (Engelbrecht Ex 3 (LSI-1659-1733) (**CD-ROM** Pathlight Exhibits D074).	
	C114	Report of the Working Group on Storage I/O for Large Scale Computing; Department of Computer Science Duke University: CS-1996-21 (PTI 173330-347). (**CD-ROM** Pathlight Exhibits D098).	
	C115	Brian Allison's 1999 Third Quarter Sales Plan (PDX 38)CNS 022120-132)) (**CD-ROM** Pathlight Exhibits D201).	6/5/2001
	C116	Brooklyn SCSI-SCSI Intelligent External RAID Bridge Definition Phase External Documentation (**CD-ROM** Pathlight Exhibits D129).	
Examiner Signature		Date Considered	

ARTIFACT SHEET

Enter artifact number below. Artifact number is application number + artifact type code (see list below) + sequential letter (A, B, C ...). The first artifact folder for an artifact type receives the letter A, the second B, etc.. Examples: 59123456PA, 59123456PB, 59123456ZA, 59123456ZB

(90/067,123CAP

Indicate quantity of a single type of artifact received but not scanned. Create individual artifact folder/box and artifact number for each Artifact Type.

☐ CD(s) containing:
computer program listing ☐
Doc Code: Computer Artifact Type Code: P
pages of specification and/or sequence listing and/or table ☐
Doc Code: Artifact Artifact Type Code: S
content unspecified or combined ☐
Doc Code: Artifact Artifact Type Code: U

☐ Stapled Set(s) Color Documents or B/W Photographs
Doc Code: Artifact Artifact Type Code: C

☐ Microfilm(s)
Doc Code: Artifact Artifact Type Code: F

☐ Video tape(s)
Doc Code: Artifact Artifact Type Code: V

☐ Model(s)
Doc Code: Artifact Artifact Type Code: M

☐ Bound Document(s)
Doc Code: Artifact Artifact Type Code: B

☐ Confidential Information Disclosure Statement or Other Documents marked Proprietary, Trade Secrets, Subject to Protective Order, Material Submitted under MPEP 724.02, etc.
Doc Code: Artifact Artifact Type Code X

☐ Other, description: _____
Doc Code: Artifact Artifact Type Code: Z

March 8, 2004

ARTIFACT SHEET

Enter artifact number below. Artifact number is application number + artifact type code (see list below) + sequential letter (A, B, C ...). The first artifact folder for an artifact type receives the letter A, the second B, etc..
Examples: 59123456PA, 59123456PB, 59123456ZA, 59123456ZB

(90/067,123 UA)

Indicate quantity of a single type of artifact received but not scanned. Create individual artifact folder/box and artifact number for each Artifact Type.

☑ CD(s) containing:
computer program listing ☐
Doc Code: Computer Artifact Type Code: P

pages of specification and/or sequence listing and/or table ☐
Doc Code: Artifact Artifact Type Code: S

content unspecified or combined ☐
Doc Code: Artifact Artifact Type Code: U

☐ Stapled Set(s) Color Documents or B/W Photographs
Doc Code: Artifact Artifact Type Code: C

☐ Microfilm(s)
Doc Code: Artifact Artifact Type Code: F

☐ Video tape(s)
Doc Code: Artifact Artifact Type Code: V

☐ Model(s)
Doc Code: Artifact Artifact Type Code: M

☐ Bound Document(s)
Doc Code: Artifact Artifact Type Code: B

☐ Confidential Information Disclosure Statement or Other Documents marked Proprietary, Trade Secrets, Subject to Protective Order, Material Submitted under MPEP 724.02, etc.
Doc Code: Artifact Artifact Type Code X

☐ Other, description: _____
Doc Code: Artifact Artifact Type Code: Z

March 8, 2004

UNITED STATES PATENT AND TRADEMARK OFFICE

COMMISSIONER FOR PATENTS
UNITED STATES PATENT AND TRADEMARK OFFICE
P.O. BOX 1450
ALEXANDRIA, VA 22313-1450
www.uspto.gov

Sprinkle IP Law Group (For Patent Owner)
1301 W. 25th Street
Suite 408
Austin, TX 78705

MAILED
FEB 2 8 2005
REEXAM UNIT

Enclosure: Requester petition filed January 26, 2005

Natu J. Patel, Esq., (For Third Party Requester)
Wang & Patel PC
1301 Dove Street, Suite 1050
Newport Beach, CA 92660

In re Hoese et al
Reexamination Proceeding
Control No. 90/007,123
Filed: July 19, 2004
For: U.S. Patent No. 5,941,972

: DECISION
: RETURNING
: PETITION

This is a decision on the January 26, 2005 requester petition [1] under 37 CFR 1.182, titled "PETITION TO DIRECTOR TO INVOKE SUPERVISORY AUTHORITY UNDER 37 C.F.R. §§ 1.181(a)(3) and 1.182."

The petition is before the Office of Patent Legal Administration for decision.

The petition is an improper paper, and will not be considered for the reasons set forth below. Rather than returning the petition to the requester, it is being forwarded to the patent owner, since there is no indication that a copy was served on the patent owner.

[1] It is assumed that the petitioner is the third party requester for the reasons set forth below in part 4 of the Background.

BACKGROUND

1. U.S. Patent No. 5,941,972 (the '972 patent), issued to Hoese et al on August 24, 1999.

2. A request for reexamination of the '972 patent (assigned Control No. 90/007,123) was filed by a third party requester on July 19, 2004. The third party requester was identified in the request papers as Wang & Patel PC, 1301 Dove Street, Suite 1050, Newport Beach, CA 92660.

3. Reexamination was ordered September 22, 2004, for the '7123 reexamination proceeding.

4. On January 26, 2005, the present petition under 37 CFR 1.181 and 37 CFR 1.182 was filed. The petition was filed by Wang, Hartmann & Gibbs, PC, 1301 Dove Street, Suite 1050, Newport Beach, CA 92660. It is assumed that the petitioner is the requester, given the common address and common attorney Wang for both the petition and the request.

5. The present January 26, 2005 petition seeks relief as to the following Office proceedings:

   A. Reexamination Control No. 90/007,123
      (The present reexamination proceeding.)

   B. Reexamination Control No. 90/007,124

   C. Reexamination Control No. 90/007,125

   D. Reexamination Control No. 90/007,126

   E. Reexamination Control No. 90/007,127

   F. Patent Application No. 10/658,163

   One copy of the present petition was submitted, and that copy was accompanied by one petition fee. The single submitted petition is taken as a petition in the '7123 proceeding, since that is the first proceeding listed in the petition caption. The other proceedings are, however, addressed below in the decision.

6. The relief sought in the present petition is the assignment, by the Director, of a "Superordinate" to supervise the above-listed proceedings.

7. On February 7, 2005, a non-final Office action was issued for the '7123 reexamination proceeding.

DECISION "RETURNING PAPER"

The January 26, 2005 requester petition is an improper paper, and it will not be made of record in the reexamination file, based on the discussion which follows.

1. Under 37 CFR 1.540:

> "... No submissions other than the statement pursuant to § 1.530 and the reply by the *ex parte* reexamination requester pursuant to § 1.535 will be considered prior to examination."

The present petition was filed by the requester prior to the start of the examination on the merits. It is not a statement under 37 CFR 1.530, nor is it a reply under 37 CFR 1.535. Rather, it is a paper seeking a "Superordinate" to supervise a set of proceedings, of which this proceeding is one. Thus, the petition paper does not have an entry right.

Even if the petition were submitted after the examination stage of the proceeding was commenced, it would not have an entry right. Under 37 CFR 1.550(g):

> "The active participation of the *ex parte* reexamination requester ends with the reply pursuant to § 1.535, and no further submissions on behalf of the reexamination requester will be acknowledged or considered. Further, no submissions on behalf of any third parties will be acknowledged or considered unless such submissions are:
> (1) in accordance with § 1.510 or § 1.535; or
> (2) entered in the patent file prior to the date of the order for *ex parte* reexamination pursuant to § 1.525."

The petition does not meet the criteria of 37 CFR 1.550(g)(1) and (g)(2).

For the above reasons, the present petition (a) does not have an entry right in the reexamination proceeding for which it has been submitted, and (b) does not have an entry right in any of the other reexamination proceedings for which relief is requested in the petition.

2. As to Patent Application No. 10/658,163, the petition would not have an entry right therein. There is nothing in the patent statutes which gives rise to a right for non-applicants to object to the manner in which a patent application of another is prosecuted, nor to the manner in which a patent application of another is treated by the Office. See *Animal Defense Fund v. Quigg*, 932 F.2d 920, 930, 18 USPQ2d 1677, 1685 (Fed. Cir. 1991); *Hallmark Cards, Inc. v. Lehman*, 959 F. Supp. 539, 42 USPQ2d 1134 (D.D.C. 1997). Petitioner seeks to employ 37 CFR §§ 1.181 and 1.182 in support of the request that a "Superordinate" be appointed to supervise a set of proceedings including Application No. 10/658,163. A third party (i.e., non-applicant), however, does not have standing to invoke Office decisions regarding patent applications during the prosecution process. This is so, even where there is an assertion of a right to have the Office act in accordance with the statutes and regulations (in this instance; the petition is directed to the potential for future actions which the petition discusses). See *The Boeing Company v. Commissioner of Patents and Trademarks*, 853 F.2d 878, 7 USPQ2d 1487 (Fed. Cir. 1988). A third party does not have standing to challenge Office decisions regarding patent applications during the prosecution process, including the decision to grant a patent to an applicant during the prosecution process, which is *ex parte*. See, e.g., *Godtfredsen v. Banner, 503 F.Supp* 642, 647, 207 USPQ 202, 207 (D.D.C. 1980); *Syntex v. United States Patent and Trademark Office*, 882 F.2d 1570, 1574-1575, 11 USPQ2d 1866, 1870 (Fed. Cir. 1989).

3. Pursuant to 37 CFR 1.550(f):

> "After filing of a request for *ex parte* reexamination by a third party requester, any document filed by either the patent owner or the third party requester must be served on the other party in the reexamination proceeding in the manner provided by § 1.248. The document must reflect service or the document may be refused consideration by the Office."

The requisite proof of service on the patent owner is not included with the instant petition papers. Any future communications filed by the requester in this proceeding must include proof of service on the patent owner in accordance with 37 CFR 1.550(f).

4. Under 37 CFR 1.4(b):

> (b) Since each file must be complete in itself, a separate copy of every paper to be filed in a patent application, patent file, trademark registration file, or other proceeding must be furnished for each file to which the paper pertains, even though the contents of the papers filed in two or more files maybe identical.

In the present instance, only one copy of the petition was submitted for the relief requested for the reexaminations 90/007,123, 90/007,124, 90/007,125, 90/007,126, and 90/007,127, and application 10/658,163. Thus, again, the petition is improper.

5. As a final point: It is requested that a "Superordinate" be appointed to supervise a set of proceedings including reexaminations 90/007,123, 90/007,124, 90/007,125, 90/007,126 and 90/007,127, and application 10/658,163. This request is not directed to relief to be provided as to any action that was taken in the instant reexamination proceeding, but rather to address the possibility of future/potential action by the Office which is identified in the petition. If, subsequent to an action taken in the instant reexamination proceeding, a party having an entry right for a petition desires relief from an action taken in the instant proceeding, then at that point, a petition would be timely. However, as pointed out above, the present petitioner would not have a future entry right in any of the proceedings to which the present petition is directed.

6. In view of the above, the petition is an improper submission, and it will not be made of record in the reexamination file. While ordinarily the petition would be returned to the requester petitioner, in this instance it is being forwarded to the patent owner, since there is no indication that the owner was provided with a copy of the papers, as discussed above. The present decision will be made of record in the reexamination file.

CONCLUSION

1. The requester petition filed January 26, 2005, is an improper paper, and will not be considered.

2. The petition papers are being forwarded, with the instant decision, to the patent owner, since there is no indication that a copy of the papers was served on the patent owner.

3. The present decision will be made of record in the reexamination file.

4. The reexamination proceeding is returned to Technology Center 2100.

5. Telephone inquiries related to the present decision should be directed to the undersigned, at 571-272-7710.

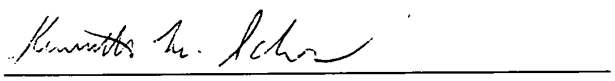

Kenneth M. Schor
Senior Legal Advisor
Office of Patent Legal Administration
Office of the Deputy Commissioner
for Patent Examining Policy

February 28, 2005
C:\kiva\kimpropa\7123_sup_do_related_cases.wpd

Reexam

IN THE UNITED STATES PATENT AND TRADEMARK OFFICE	
CHANGE OF POWER OF ATTORNEY AND CORRESPONDENCE ADDRESS	Atty. Docket No. **CROSS1120-14**

Applicant **Geoffrey B. Hoese, et al.**	
Application Number **90/007,123**	Date Filed **07/19/2004**
Title **Storage Router and Method for Providing Virtual Local Storage**	
Group Art Unit **7590**	Examiner **Fleming, Fritz**
Confirmation Number: **2293**	

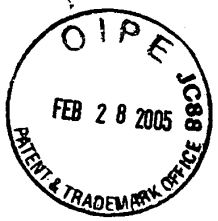

Applicant hereby served the attached Revocation and Power of Attorney and Change of Mailing Address on Third Party Requester at the address listed below:

Wang and Patel, PC
1301 Dove Street, Suite 1050
Newport Beach, CA 92660

As per 35 U.S.C. §1.248 service was made via first class mail on February 18, 2005.

Respectfully submitted,

Sprinkle IP Law Group

John L. Adair
Reg. No. 48,828

Dated: February 22, 2005

1301 W. 25th Street, Suite 408
Austin, Texas 78705
Tel. (512) 637-9220
Fax. (512) 371-9088

Enclosures

OIPE
FEB 28 2005
PATENT & TRADEMARK OFFICE
JC88

sprinkle IP LAW GROUP

February 18, 2005

Natu J. Patel, Esq.
Wang & Patel PC
1303 Dove Street
Suite 1050
Newport Beach, CA 92660

Re: U.S. Reexam No. 90/007,123 filed 07/19/2004 (Our No. CROSS1120-14)
U.S. Reexam No. 90/007,124 filed 07/19/2004 (Our No. CROSS1121-15)
U.S. Reexam No. 90/007,126 filed 07/19/2004 (Our No. CROSS1122-16)
U.S. Reexam No. 90/007,125 filed 07/19/2004 (Our No. CROSS1123-17)
U.S. Reexam No. 90/007,127 filed 07/19/2004 (Our No. CROSS1128-18)

Dear Mr. Patel:

Applicant hereby serves the Revocation and Powers of Attorney in the above-referenced cases on:

Wang & Patel PC
1303 Dove Street
Suite 1050
Newport Beach, CA 92660

As per U.S.C. § 1.248, service is made via first class mail on February 18, 2005. These documents give Sprinkle IP Law Group the authority to transact all business with the U.S. Patent Office in connection with the above matters.

Sincerely,

Sprinkle IP Law Group

John L. Adair
jadair@sprinklelaw.com

JLA/jp
Enclosure

1301 W. 25th STREET, SUITE 408, AUSTIN, TX 78705
[o] 512.637.9220 [f] 512.371.9088

Received Fax: DEC-03-2004 4:33 Fax Station: CROSSROADS SYSTEMS INC. Page: 5

OIPE JC88 FEB 28 2005 PATENT & TRADEMARK OFFICE

IN THE UNITED STATES PATENT AND TRADEMARK OFFICE	
REVOCATION AND POWER OF ATTORNEY AND CHANGE OF MAILING ADDRESS	Atty. Docket No. **CROSS1120-14**
Applicants **Geoffrey B. Hoese, et al.**	
Application No. **90/007,123**	Filing Date **07/19/2004**
For **Storage Router and Method for Providing Virtual Local Storage**	
Group Art Unit **7590**	Examiner **Fleming, Fritz**
Confirmation No. **2293**	

Certification Under 37 C.F.R. §1.8

I hereby certify that this document is being transmitted to the COMMISSIONER FOR PATENTS via facsimile on 12/8, 2004.

Janice Pampell

Janice Pampell

Commissioner for Patents
P.O. Box 1450
Alexandria, VA 22313-1450

Dear Sir:

Crossroads Systems, Inc., 100% owner of the above-identified patent application, as evidenced by the Assignment recorded in the parent application on December 31, 1997 on Reel/Frame: 8929/0290, hereby revokes all previous Powers of Attorney and appoints the following attorneys under Customer No. 44654, all of the firm of SPRINKLE IP LAW GROUP, to prosecute the above-identified Patent and to transact all business in the Patent and Trademark Office connected therewith.

STEVEN R. SPRINKLE	Registration No. 40,825
JOHN ADAIR	Registration No. 48,828
ARI AKMAL	Registration No. 51,388

Direct all telephone calls and correspondence to:

Customer No. 44654
SPRINKLE IP LAW GROUP
1301 W. 25th Street, Suite 408
Austin, Texas 78705
Attn: Steven Sprinkle
Tel. (512) 637.9220 / Fax (512) 371.9088

I hereby state I am authorized to act on behalf of Crossroads Systems, Inc.

Respectfully submitted,

Crossroads Systems, Inc.

By: _____
Robert Sims, President & CEO

Dated: Dec 7, 2004

Re Exam

OIPE JC1/84
FEB 24 2005
PATENT & TRADEMARK OFFICE

4660 U.S. PTO
02/24/05

IN THE UNITED STATES PATENT AND TRADEMARK OFFICE

Reexamination Appl. No.: 90/007,123	**CHANGE OF CORRESPONDENCE ADDRESS OF THIRD-PARTY REQUESTER FOR EX PARTE REEXAMINATION**
Reexam. Request Filed: July 19, 2004	
Patent No.: 5,941,972	
Issued: August 24, 1999	
Inventor: Hoese, et al.	
Group Art Unit: 2182	
Examiner: Fleming, Fritz M.	
Attorney Docket No.: I006-8900	

Commissioner for Patents
P.O. Box 1450
Alexandria, VA 22313-1450

CHANGE OF CORRESPONDENCE ADDRESS OF THIRD-PARTY REQUESTER FOR EX PARTE REEXAMINATION

Dear Sir:

Please change the correspondence address for notifications sent to the third-party requester in the above-referenced patent reexamination proceeding to:

Larry E. Severin
Wang, Hartmann & Gibbs, PC
1301 Dove Street, #1050
Newport Beach CA 92660
Telephone: (949) 833-8483
Fax: (949) 833-2281

The individual who originally requested this ex parte reexamination, Natu J. Patel, is no longer with our firm. Our firm does, however, continue to represent the parties upon whose behalf this request was made. Accordingly, our firm retains the right to

receive copies of Office Actions or other correspondence from the Patent and Trademark Office that is sent to the third party requester in an ex parte reexamination proceeding under 37 C.F.R. §1.550.

A copy of this letter, including the certification of service, has been sent to the attorney of record of the patent owner, per 37 C.F.R. §1.33(c). Certification of service is enclosed.

February 18, 2005

Respectfully submitted,
Wang, Hartmann & Gibbs, PC
1301 Dove Street, #1050
Newport Beach CA 92660
(949) 833-8483

Larry E. Severin
Reg. No. 54606

Enclosures:

- Certificate of Service to Patent Owner

I hereby certify that this is being deposited with the United States Postal Service with sufficient postage as first class mail on the date indicated above in an envelope addressed to Commissioner for Patents, P.O. Box 1450, Alexandria, VA 22313-1450..

Dated: 2/18/05 Signed _____
Print Name: Faiza Anwar

CERTIFICATE OF SERVICE

I hereby certify that a true copy of the attached **Change Of Correspondence Address Of Third-Party Requester For Ex Parte Reexamination** was served upon counsel of record at each of the addresses below via U.S. Postal Service first class mail on February 18, 2005:

DLA PIPER RUDNICK GRAY CARY US, LLP
Atn: Mark Berrier
2000 University Avenue
E. Palo Alto CA 94303-2248

SPRINKLE IP LAW GROUP
1301 W. 25TH Street
Suite 408
Austin TX 78705

Date: February 18, 2004

Faiza Anwar

UNITED STATES PATENT AND TRADEMARK OFFICE

UNITED STATES DEPARTMENT OF COMMERCE
United States Patent and Trademark Office
Address: COMMISSIONER FOR PATENTS
P.O. Box 1450
Alexandria, Virginia 22313-1450
www.uspto.gov

APPLICATION NO.	FILING DATE	FIRST NAMED INVENTOR	ATTORNEY DOCKET NO.	CONFIRMATION NO.
90/007,123	07/19/2004	5941972	1006-8900	2293

44654 7590 02/07/2005

SPRINKLE IP LAW GROUP
1301 W. 25TH STREET
SUITE 408
AUSTIN, TX 78705

EXAMINER	
ART UNIT	PAPER NUMBER

DATE MAILED: 02/07/2005

Please find below and/or attached an Office communication concerning this application or proceeding.

PTO-90C (Rev. 10/03)

UNITED STATES PATENT AND TRADEMARK OFFICE

Commissioner for Patents
United States Patent and Trademark Office
P.O. Box 1450
Alexandria, VA 22313-1450
www.uspto.gov

DO NOT USE IN PALM PRINTER

(THIRD PARTY REQUESTER'S CORRESPONDENCE ADDRESS)

Natu J. Patel
WANG & PATEL, PC
1301 Dove Street, Suite 1050
Newport Beach, CA 92660

EX PARTE REEXAMINATION COMMUNICATION TRANSMITTAL FORM

REEXAMINATION CONTROL NO. *90/007,123*.

PATENT NO. *5,941,972*.

ART UNIT *2182*.

Enclosed is a copy of the latest communication from the United States Patent and Trademark Office in the above identified *ex parte* reexamination proceeding (37 CFR 1.550(f)).

Where this copy is supplied after the reply by requester, 37 CFR 1.535, or the time for filing a reply has passed, no submission on behalf of the *ex parte* reexamination requester will be acknowledged or considered (37 CFR 1.550(g)).

Oracle-Huawei-NetApp Ex. 1024, pg. 2222

Office Action in Ex Parte Reexamination	Control No. 90/007,123	Patent Under Reexamination 5941972	
	Examiner Fritz M Fleming	Art Unit 2182	

-- The MAILING DATE of this communication appears on the cover sheet with the correspondence address --

a☐ Responsive to the communication(s) filed on _____ . b☐ This action is made FINAL.
c☒ A statement under 37 CFR 1.530 has not been received from the patent owner.

A shortened statutory period for response to this action is set to expire 2 month(s) from the mailing date of this letter. Failure to respond within the period for response will result in termination of the proceeding and issuance of an *ex parte* reexamination certificate in accordance with this action. 37 CFR 1.550(d). **EXTENSIONS OF TIME ARE GOVERNED BY 37 CFR 1.550(c).** If the period for response specified above is less than thirty (30) days, a response within the statutory minimum of thirty (30) days will be considered timely.

Part I THE FOLLOWING ATTACHMENT(S) ARE PART OF THIS ACTION:

1. ☒ Notice of References Cited by Examiner, PTO-892.
2. ☒ Information Disclosure Statement, PTO-1449.
3. ☐ Interview Summary, PTO-474.
4. ☐ _____.

Part II SUMMARY OF ACTION

1a. ☒ Claims 1-14 are subject to reexamination.
1b. ☐ Claims _____ are not subject to reexamination.
2. ☐ Claims _____ have been canceled in the present reexamination proceeding.
3. ☐ Claims _____ are patentable and/or confirmed.
4. ☒ Claims 1-14 are rejected.
5. ☐ Claims _____ are objected to.
6. ☒ The drawings, filed on 7/19/2004 are acceptable.
7. ☐ The proposed drawing correction, filed on _____ has been (7a)☐ approved (7b)☐ disapproved.
8. ☐ Acknowledgment is made of the priority claim under 35 U.S.C. § 119(a)-(d) or (f).
   a)☐ All b)☐ Some* c)☐ None of the certified copies have
   1☐ been received.
   2☐ not been received.
   3☐ been filed in Application No. _____ .
   4☐ been filed in reexamination Control No. _____.
   5☐ been received by the International Bureau in PCT application No. _____.
   * See the attached detailed Office action for a list of the certified copies not received.
9. ☐ Since the proceeding appears to be in condition for issuance of an *ex parte* reexamination certificate except for formal matters, prosecution as to the merits is closed in accordance with the practice under *Ex parte* Quayle, 1935 C.D. 11, 453 O.G. 213.
10. ☐ Other: _____

cc: Requester (if third party requester)

Oracle-Huawei-NetApp Ex. 1024, pg. 2223

Reexamination

1. The patent owner is reminded of the continuing responsibility under 37 CFR 1.565(a) to apprise the Office of any litigation activity, or other prior or concurrent proceeding, involving Patent No. 5,941,972 throughout the course of this reexamination proceeding. The third party requester is also reminded of the ability to similarly apprise the Office of any such activity or proceeding throughout the course of this reexamination proceeding. See MPEP §§ 2207, 2282 and 2286.

Claim Rejections - 35 USC § 103

2. The following is a quotation of 35 U.S.C. 103(a) which forms the basis for all obviousness rejections set forth in this Office action:

> (a) A patent may not be obtained though the invention is not identically disclosed or described as set forth in section 102 of this title, if the differences between the subject matter sought to be patented and the prior art are such that the subject matter as a whole would have been obvious at the time the invention was made to a person having ordinary skill in the art to which said subject matter pertains. Patentability shall not be negatived by the manner in which the invention was made.

3. The factual inquiries set forth in *Graham* v. *John Deere Co.*, 383 U.S. 1, 148 USPQ 459 (1966), that are applied for establishing a background for determining obviousness under 35 U.S.C. 103(a) are summarized as follows:

1. Determining the scope and contents of the prior art.
2. Ascertaining the differences between the prior art and the claims at issue.
3. Resolving the level of ordinary skill in the pertinent art.
4. Considering objective evidence present in the application indicating obviousness or nonobviousness.

4. This application currently names joint inventors. In considering patentability of the claims under 35 U.S.C. 103(a), the examiner presumes that the subject matter of the various claims was commonly owned at the time any inventions covered therein were made absent any evidence to the contrary. Applicant is advised of the obligation under 37 CFR 1.56 to point out

the inventor and invention dates of each claim that was not commonly owned at the time a later invention was made in order for the examiner to consider the applicability of 35 U.S.C. 103(c) and potential 35 U.S.C. 102(e), (f) or (g) prior art under 35 U.S.C. 103(a).

5. Claims 7-9,11-14 are rejected under 35 U.S.C. 103(a) as being unpatentable over Petal in view of Quam and Cummings.

Petal is competent art under 102(b) as its publication date is September 1996, more than one year prior to effective filing date (12/31/1997) of the instant patent.

Addressing claim 11 (the broadest independent claim), Petal provides virtual local storage (page 5, section 3, "This allows clients to access Petal virtual disks just like local disks." And page 7, section 3.2 "Petal provides clients with a large virtual disk that is available to all clients on the network.") in the form of the Figure 1 virtual disks in the form of Figure 6 SCSI disks (connected to one transport medium—SCSI) to devices connected to another transport medium in the form of the Petal clients connected to the Digital ATM Network. The method is shown to interface to the first transport medium (Digital ATM Network for the clients) and the second transport medium (SCSI for the disks) per Figure 6 via the overall Petal Virtual Disk storage servers of the Figure 2 physical view, which provides the actual interface between the two media. A mapping is shown per Figure 4 and the virtual to physical mapping and the section 2 discussion. Page 3 shows the 3 step mapping process to translate a client supplied virtual disk identifier into a global map identifier, to a given offset, to the physical mapping at the actual disk. Thus there is a mapping of the client devices to the storage devices in order to use the storage space. As far as "implements access controls for storage space on the storage devices" is concerned, this limitation is very broad in that it provides no specifics as to exactly what these

controls are to be. Given this, page 7, column 2 sets forth "We currently do not provide any special support for protecting a client's data from other clients; however, it would not be difficult to provide security on a per virtual disk basis.", which is anticipatory, as this teaches an implementation of security access controls on a per virtual disk basis, if and when desired. Thus there is a clear teaching of an implementation of a security access control per virtual disk basis by protecting a client's data from other clients. Given a plain reading of this passage, it clearly teaches that a client is only able to access its own virtual disk. Finally, this access is allowed from the client devices to the storage devices "using native, low level, block protocols", as page 7, section 4, column 2 provides "Petal provides a disk-like interface that allows clients to read and write blocks of data." Section 3.2 provides "In all cases but one, the file system level performance of the Petal virtual disk is comparable to locally attached disks." Section 3, column 2, page 5 sets forth that access to the disks is provided using the UNIX raw disk interface. Page 1, column 2+, sets forth the concept of a "lower level service" and "block level storage system" and "An additional benefit is that the block-level interface is useful for supporting heterogeneous clients and client applications". Section 2, column 1, page 2 explicitly sets forth "As shown in Figure 2, Petal consists of a pool of distributed storage servers that cooperatively implement a single, block level storage system. Clients view the storage system as a collection of virtual disks " which anticipates the breadth of the claim language, as it only requires the use of "native, low level, block protocols." Also note page 8, column 2, which clearly states "Petal provides block level rather than a file level interface." Finally, page 1, column 1, sets forth specifically "To a Petal client, this collection appears as a highly available block-level storage system that provides large abstract containers called virtual disks. A virtual

disk is globally accessible to all Petal clients on the network. A client can create a virtual disk on demand to tap the entire capacity and performance of the underlying physical resources." Thus the reference anticipates the native, low level, block protocols, as the clients view the storage as block level and hence access it using such protocols accordingly. The mapping between the workstations and the SCSI drives and access controls is maintained by the mapping of Figure 4, in order to maintain the configuration of the created virtual disks. Per claim 12, anticipation is provided by the previously mentioned "for protecting a client's data from other clients...to provide security on a per virtual disk basis." As a client creates a virtual disk, and such can be kept private from other clients, then each virtual disk, which is a subset of the entire storage, is only accessible by that client to which it is mapped. Per claim 13, workstations are the clients. Per claim 14, SCSI hard disk drives are the storage devices.

Turning to claims 7-9, claim 7 adds a storage router interfacing the media. When viewed per the Figures, Petal provides a storage router via the mapping of Figure 4. Figure 4 provides for the mapping and thus the storage routing of the translation of the client supplied virtual disk identifier to the actual physical disk. Per column 2, section 2, clients maintain minimal high level mapping information so as to properly route read and write requests to the "most appropriate" server. Thus "routing" is used to get the mapping from the client to the actual disk, and the mapping of Figure 4, which is the Petal servers taken as a whole, thus meeting the claimed "storage router" limitation. It is to be noted that the "storage router" is not further defined in any sort of a structural manner, therefore the Petal servers acting per Figure 4, anticipate what is claimed. Also note that claim 10 only requires "and operable", "to map", and "to implement" and "to allow", all of which are provided by the "storage router" of the Petal

system, interpreted to be all of the Petal system of Figure 6, absent the disks. Thus the access is allowed via block level protocols in accordance with the mapping and access controls.

Note that the "to allow" and "allowing" limitations of claims 7/11 are very broad. Claim 7 only requires that the "storage router" be "operable" "to allow access...using ..." without further specifying how or what "uses" these protocols. As the Petal system uses a block-level interface and blocks of data are read and written (i.e. section 3.1), the native, low-level block protocols are used, at least to the extent claimed. The same applies to the limitations of claim 12. Note also that per section 3, that both the Petal servers and clients run Digital Unix, so that the client is able to access Petal virtual disks just like local disks, which per section 4, page 7, column 2 results in "Petal provides a disk-like interface that allows clients to read and write blocks of data", and per section 6, column 2, page 8 has "Petal provides a block level rather than a file level interface.", thereby teaching the use of native, low level, block protocol. Finally, note section 1, which reads "A Petal virtual disk is a container that provides a sparse 64-bit byte storage space. AS with ordinary magnetic disks, data are read and written to Petal virtual disks in blocks", thereby providing for clear anticipation of what is claimed.

Petal, as discussed in detail above, teaches and anticipates a storage router for providing local storage on remote storage devices, but does not specify the Fibre Channel to connect the workstations to the SCSI disk arrays. Note that the network used to connect the clients to the virtual local storage is an ATM protocol based network.

Quam, as a whole, compares and contrasts ATM to Fibre Channel. Per pages 651-2, "Fibre Channel vs. ATM", it is clearly taught that Fibre-channel is better suited is better suited

for a channel where large blocks of data are transferred between users, while ATM is suited for high speed switching with low latency.

Cummings, as a whole, teaches the use of Fibre-Channel so that the Disk Array and Tape Library are accessed using the same protocols (e.g. SCSI) as if they were connected to the user's local workstation, such that remote disk storage is regarded as private and can be accessed at the same level of performance and with comparable latency as any local disk, per pages 253-254 and Figure 2.

Therefore it would have been obvious to one having ordinary skill in the art at the time that the invention was made to modify the teachings of Petal per those of Quam and Cummings so as to change from the ATM to a Fibre Channel network interconnecting the workstations to the SCSI drives, so as to be able to use Fibre Channel as the network to transfer large blocks of data (better suited for Fibre Channel vs. ATM) and to be able to access a disk array using the same SCSI protocol as if they were connected to the user's local workstation with the same latency and level of performance as a local disk with the Fibre Channel, the same as is done by Petal. Thus the references are properly combinable and provide express motivation to switch from an ATM to Fibre Channel network.

6. Claims 1-4,10 are rejected under 35 U.S.C. 103(a) as being unpatentable over Petal in view of Quam and Cummings, as applied to claims 8-10 and 12-16, further in view of Crouse et al.

Petal, as discussed in detail above, teaches a storage router for providing local storage on remote storage devices, but does not detail a buffer or supervisor connected to the two

controllers. Note that the network used to connect the clients to the virtual local storage is an ATM protocol based network.

Finally, Crouse et al. show the specifics of a UNIX running network data server 14, that provides an interface between a Fibre Channel network 12b and the SCSI storage 46. Thus, per Figures 3 and 4, note a first controller 54 operable to connect to the Fibre Channel medium 12b, a second controller 68 connected to the SCSI bus and storage, with a buffer 64 providing memory work space to facilitate block transfers. A supervisor unit is seen as 60, to include the device microprocessor of Figure 4, and is thus operably coupled to both controllers 54 and 68, so that block oriented I/O operations can be carried out at maximum transfer rates to and from the storage 16, the controller 68, the buffer 64, the processor 54, and network 12.

Therefore it would have been obvious to one having ordinary skill in the art at the time that the invention was made to modify Petal per the teachings of Quam, Cummings and Crouse et al. for the express purpose of using Fibre-Channel in place of ATM to take advantage of Fibre-Channel's ability to better transfer large blocks of data, to then use the Fibre Channel to obtain the same advantages of Petal in the form of Fibre Channel's ability to access a disk array using a SCSI protocol as if they were attached to the local workstation with access and latency comparable to local disk access per Cummings, with the specifics of controllers and buffer and supervisor running on a UNIX based network data server in order to carry out block transfers at maximum transfer rates per Crouse et al.

7. Claims 5 and 6 are rejected under 35 U.S.C. 103(a) as being unpatentable over Petal in view of Quam and Cummings and Crouse et al. as applied to claims indicated above, and further in view of Pisello et al.

Petal in view of Quam and Cummings and Crouse et al. set forth the specifics of the Fibre-Channel to SCSI interface to include DMA transfers at both controllers at 66, but lacking the FIFO queue and the internal buffer.

Pisello et al., in the same art of network to SCSI interfacing, shows a supervisor 44 coupled to the first controller 38 and the second controller 42, with a FIFO queue RAM buffer 48 that is coupled to the first controller 38 and a second controller 42 when the other buffer 40 has data on its way through 42 onto bus 30. See column 3, lines 28-44. The purpose is to provide a direct connection for a SCSI device to a LAN/network, thereby precluding another LAN server, which is consistent with the teachings of the other references.

Therefore it would have been obvious to one having ordinary skill in the art at the time that the invention was made to modify the teachings of Petal in view of Quam and Cummings and Crouse et al. by the teachings of Pisello et al. for the purpose allowing for a direct connection of a SCSI device to the network, with the ability to queue SCSI data in a FIFO buffer. Thus combined, the buffers 48 and 40 of Pisello et al. interact with the DMA of Crouse et al. coupled thereto, in order to maximize transfer rates while directly coupling the first and second protocol units 54/60 of Crouse et al. to their respective transport media. Thus the DMA interfaces 66 of Crouse et al. are analogously coupled to the buffers of Pisello et al. for the purpose of being able to queue SCSI data.

Any inquiry concerning this communication or earlier communications from the examiner should be directed to Fritz M Fleming whose telephone number is 571-272-4145. The examiner can normally be reached on M-F, 0600-1500.

If attempts to reach the examiner by telephone are unsuccessful, the examiner's supervisor, Jeffrey Gaffin can be reached on 571-272-4146. The fax phone number for the organization where this application or proceeding is assigned is 703-872-9306.

Information regarding the status of an application may be obtained from the Patent Application Information Retrieval (PAIR) system. Status information for published applications may be obtained from either Private PAIR or Public PAIR. Status information for unpublished applications is available through Private PAIR only. For more information about the PAIR system, see http://pair-direct.uspto.gov. Should you have questions on access to the Private PAIR system, contact the Electronic Business Center (EBC) at 866-217-9197 (toll-free).

Fritz M Fleming
Primary Examiner
Art Unit 2182

fmf

Notice of References Cited	Application/Control No. 90/007,123	Applicant(s)/Patent Under Reexamination 5941972	
	Examiner Fritz M Fleming	Art Unit 2182	Page 1 of 1

U.S. PATENT DOCUMENTS

*		Document Number Country Code-Number-Kind Code	Date MM-YYYY	Name	Classification
	A	US-5,394,526	02-1995	Crouse et al.	709/219
	B	US-			
	C	US-			
	D	US-			
	E	US-			
	F	US-			
	G	US-			
	H	US-			
	I	US-			
	J	US-			
	K	US-			
	L	US-			
	M	US-			

FOREIGN PATENT DOCUMENTS

*		Document Number Country Code-Number-Kind Code	Date MM-YYYY	Country	Name	Classification
	N					
	O					
	P					
	Q					
	R					
	S					
	T					

NON-PATENT DOCUMENTS

*		Include as applicable: Author, Title Date, Publisher, Edition or Volume, Pertinent Pages)
	U	Petal: Distributed Virtual Disks, Edward K. Lee and Chandramohan A. Thekkath, ACM SIGPLAN Notices, Volume 31, Issue 9, September 1996, pages 84-92.
	V	Systems Architecture Using Fibre Channel, Roger Cummings, Twelfth IEE Symposium on Mass Storage Systems, copyright 1993, IEEE. Pages 251-256.
	W	Fibre Channel and ATM: The Physical Layers, Jerry Quam, WESCON/94, published 27-29 September 1994, pages 648-652.
	X	

*A copy of this reference is not being furnished with this Office action. (See MPEP § 707.05(a).)
Dates in MM-YYYY format are publication dates. Classifications may be US or foreign.

Oracle-Huawei-NetApp Ex. 1024, pg. 2233

Index of Claims

Application No.	Applicant(s)	
90/007,123	5941972	
Examiner	**Art Unit**	
Fritz M Fleming	2182	

√	Rejected	–	(Through numeral) Cancelled	N	Non-Elected	A	Appeal
=	Allowed	÷	Restricted	I	Interference	O	Objected

Claim		Date
Final	Original	1 24 05
	1	✓
	2	|
	3	|
	4	|
	5	|
	6	|
	7	|
	8	|
	9	|
	10	|
	11	|
	12	|
	13	|
	14	✓
	15	
	16	
	17	
	18	
	19	
	20	
	21	
	22	
	23	
	24	
	25	
	26	
	27	
	28	
	29	
	30	
	31	
	32	
	33	
	34	
	35	
	36	
	37	
	38	
	39	
	40	
	41	
	42	
	43	
	44	
	45	
	46	
	47	
	48	
	49	
	50	

Claim		Date
Final	Original	
	51	
	52	
	53	
	54	
	55	
	56	
	57	
	58	
	59	
	60	
	61	
	62	
	63	
	64	
	65	
	66	
	67	
	68	
	69	
	70	
	71	
	72	
	73	
	74	
	75	
	76	
	77	
	78	
	79	
	80	
	81	
	82	
	83	
	84	
	85	
	86	
	87	
	88	
	89	
	90	
	91	
	92	
	93	
	94	
	95	
	96	
	97	
	98	
	99	
	100	

Claim		Date
Final	Original	
	101	
	102	
	103	
	104	
	105	
	106	
	107	
	108	
	109	
	110	
	111	
	112	
	113	
	114	
	115	
	116	
	117	
	118	
	119	
	120	
	121	
	122	
	123	
	124	
	125	
	126	
	127	
	128	
	129	
	130	
	131	
	132	
	133	
	134	
	135	
	136	
	137	
	138	
	139	
	140	
	141	
	142	
	143	
	144	
	145	
	146	
	147	
	148	
	149	
	150	

Oracle-Huawei-NetApp Ex. 1024, pg. 2234

Search Notes

Application No.	Applicant(s)	
90/007,123	5941972	
Examiner	**Art Unit**	
Fritz M Fleming	2182	

SEARCHED			
Class	Subclass	Date	Examiner
710	1-2, 100-101 [redacted] 305-3/6	1/21/05	RMF
711	100, 112, 113		

INTERFERENCE SEARCHED			
Class	Subclass	Date	Examiner

SEARCH NOTES (INCLUDING SEARCH STRATEGY)		
	DATE	EXMR
EAST SEARCH NOTES	1/4/05	RMF
NPL SEARCH: SCSI, FC, Fibrechannel, Storage, block level, native ATM		

Oracle-Huawei-NetApp Ex. 1024, pg. 2235

UNITED STATES PATENT AND TRADEMARK OFFICE

UNITED STATES DEPARTMENT OF COMMERCE
United States Patent and Trademark Office
Address: COMMISSIONER FOR PATENTS
P.O. Box 1450
Alexandria, Virginia 22313-1450
www.uspto.gov

APPLICATION NUMBER	FILING OR 371 (c) DATE	FIRST NAMED APPLICANT	ATTY. DOCKET NO./TITLE
90/007,123	07/19/2004	5941972	I006-8900

CONFIRMATION NO. 2293

OC000000015123206

OC000000015123206

44654
SPRINKLE IP LAW GROUP
1301 W. 25TH STREET
SUITE 408
AUSTIN, TX 78705

Date Mailed: 02/07/2005

NOTICE OF ACCEPTANCE OF POWER OF ATTORNEY

This is in response to the Power of Attorney filed 12/08/2004.

The Power of Attorney in this application is accepted. Correspondence in this application will be mailed to the above address as provided by 37 CFR 1.33.

Michelle R. Eason

MICHELLE R EASON
3921 (571) 272-4231

OFFICE COPY

UNITED STATES PATENT AND TRADEMARK OFFICE

UNITED STATES DEPARTMENT OF COMMERCE
United States Patent and Trademark Office
Address: COMMISSIONER FOR PATENTS
P.O. Box 1450
Alexandria, Virginia 22313-1450
www.uspto.gov

APPLICATION NUMBER	FILING OR 371 (c) DATE	FIRST NAMED APPLICANT	ATTY. DOCKET NO./TITLE
90/007,123	07/19/2004	5941972	I006-8900

CONFIRMATION NO. 2293

Gray Cary Ware & Friedenrich LLP
1221 South MoPac Expressway Suite 400
Austin, TX 78746-6875

OC000000015123180
OC000000015123180

Date Mailed: 02/07/2005

NOTICE REGARDING CHANGE OF POWER OF ATTORNEY

This is in response to the Power of Attorney filed 12/08/2004.

- The Power of Attorney to you in this application has been revoked by the assignee who has intervened as provided by 37 CFR 3.71. Future correspondence will be mailed to the new address of record(37 CFR 1.33).

Michelle R. Eason

MICHELLE R EASON
3921 (571) 272-4231

OFFICE COPY

FRITZ FLEMING
PRIMARY EXAMINER
GROUP 2100

all considered
HZM 1/24/2005

Listing of Every Patent and Printed Publication Relied Upon

Printed Publication	Author	Publication Date	Where Found
CRD-5500 SCSI RAID Controller User's Manual, Rev. 1.3	CMD Technology, Inc.	November 21, 1996	Exh. 14
DIGITAL StorageWorks HSZ70 Array Controller HSOF Version 7.0 EK–CLI70–RM. A01 CLI Reference Manual.	Digital Equipment Corporation	July, 1997	Exh. 5, MSJ Exh. 8
DIGITAL StorageWorks HSZ70 Array Controller HSOF Version 7.0 EK–HSZ70–SV. A01 Service Manual.	Digital Equipment Corporation	July, 1997	Exh. 5, MSJ Exh. 6
DIGITAL StorageWorks HSZ70 Array Controller HSOF Version 7.0 K-HSZ70-CG. A01 Configuration Guide.	Digital Equipment Corporation	July, 1997	Exh. 5, MSJ Exh. 7
Fiber channel (FCS)/ATM interworking: a design solution	Anzaloni, et al.	1993	Exh. 1
Fibre channel storage interface for video-on-demand servers	Chen, et al.	1996	Exh. 1
Gen5 S-SERIES XL System Guide Revision 1.01	MAXIMUM STRATEGY INC.	June 11, 1996	Exh. 11
Graphical User Interface for MAXSTRAT Gen5/Gen-S Servers User's Guide 1.1	MAXSTRAT Corporation (formerly MAXIMUM STRATEGY INC.)	January 6, 1997	Exh.12
High Performance Data Transfers Using Network-Attached Peripherals at the National Storage Laboratory	Hyer, et al.	February 26, 1993	Exh. 1
IFT-3000 SCSI to SCSI Disk Array Controller Instruction Manual Revision 2.0	Infortrend Technologies, Inc.	1995	Exh. 16
Implementing a Fibre Channel SCSI transport	Snively	1994	Exh. 1
Local-Area Networks for the IBM PC	Haugdahl	December, 1984	Exh. 18
New serial I/Os speed storage subsystems	Bursky	February 6, 1995	Exh. 19
SCSI applications on Fibre Channel	Snively	1992	Exh. 1

Copies of all U.S. Patents are found in Exhibit 1

U.S. Patent No.	Patentee	Issue date
6,219,771	Kikuchi, et al.	April 17, 2001
6,185,203	Berman	February 6, 2001
6,108,684	DeKoning, et al.	August 22, 2000
6,098,149	Ofer, et al.	August 1, 2000
6,081,849	Born, et al.	June 27, 2000
6,073,218	DeKoning, et al.	June 6, 2000
6,073,209	Bergsten	June 6, 2000
6,055,603	Ofer, et al.	April 25, 2000
5,959,994	Boggs, et al.	September 28, 1999
5,935,260	Ofer	August 10, 1999
5,933,824	DeKoning, et al.	August 3, 1999
5,889,952	Hunnicutt, et al.	March 30, 1999
5,860,137	Raz, et al.	January 12, 1999
5,848,251	Lomelino, et al.	December 8, 1998

1499

Oracle-Huawei-NetApp Ex. 1024, pg. 2238

U.S. Patent No.	Patentee	Issue date
5,835,496	Yeung, et al.	November 10, 1998
5,812,754	Lui, et al.	September 22, 1998
5,809,328	Nogales, et al.	September 15, 1998
5,805,816	Picazo, Jr., et al.	September 8, 1998
5,802,278	Isfeld, et al.	September 1, 1998
5,781,715	Sheu	July 14, 1998
5,768,623	Judd, et al.	June 16, 1998
5,748,924	Llorens, et al.	May 5, 1998
5,727,218	Hotchkin	March 10, 1998
5,664,107	Chatwani, et al.	September 2, 1997
5,659,756	Hefferon, et al.	August 19, 1997
5,642,515	Jones, et al.	June 24, 1997
5,638,518	Malladi	June 10, 1997
5,634,111	Oeda, et al.	May 27, 1997
5,632,012	Belsan, et al.	May 20, 1997
5,621,902	Cases, et al.	April 15, 1997
5,613,082	Brewer, et al.	March 18, 1997
5,581,724	Belsan, et al.	December 3, 1996
5,581,709	Ito, et al.	December 3, 1996
5,568,648	Coscarella, et al.	October 22, 1996
5,564,019	Beausoleil, et al.	October 8, 1996
5,548,791	Casper, et al.	August 20, 1996
5,544,313	Shachnai, et al.	August 6, 1996
5,537,585	Blickenstaff, et al.	July 16, 1996
5,519,695	Purohit, et al.	May 21, 1996
5,511,169	Suda	April 23, 1996
5,507,032	Kimura	April 9, 1996
5,504,857	Baird, et al.	April 2, 1996
5,496,576	Jeong	March 5, 1996
5,495,474	Olnowich, et al.	February 27, 1996
5,491,812	Pisello, et al.	February 13, 1996
5,487,077	Hassner, et al.	January 23, 1996
5,471,609	Yudenfriend, et al.	November 28, 1995
5,469,576	Dauerer, et al.	November 21, 1995
5,463,754	Beausoleil, et al.	October 31, 1995
5,459,857	Ludlam, et al.	October 17, 1995
5,452,421	Beardsley, et al.	September 19, 1995
5,450,570	Richek, et al.	September 12, 1995
5,430,855	Walsh, et al.	July 4, 1995
5,426,637	Derby, et al.	June 20, 1995
5,423,026	Cook, et al.	June 6, 1995
5,420,988	Elliott	May 30, 1995
5,418,909	Jackowski, et al.	May 23, 1995
5,416,915	Mattson, et al.	May 16, 1995
5,410,697	Baird, et al.	April 25, 1995
5,410,667	Belsan, et al.	April 25, 1995
5,403,639	Belsan, et al.	April 4, 1995
5,396,596	Hashemi, et al.	March 7, 1995
5,388,246	Kasai	February 7, 1995
5,388,243	Glider, et al.	February 7, 1995
5,379,398	Cohn, et al.	January 3, 1995
5,379,385	Shomler	January 3, 1995

Oracle-Huawei-NetApp Ex. 1024, pg. 2239

U.S. Patent No.	Patentee	Issue date
5,367,646	Pardillos, et al.	November 22, 1994
5,361,347	Glider, et al.	November 1, 1994
5,331,673	Elko, et al.	July 19, 1994
5,317,693	Elko, et al.	July 19, 1994
5,315,657	Abadi, et al.	May 24, 1994
5,301,290	Tetzlaff, et al.	April 5, 1994
5,297,262	Cox, et al.	March 22, 1994
5,247,692	Fujimura	September 21, 1993
5,247,638	O'Brien, et al.	September 21, 1993
5,239,654	Ing-Simmons, et al.	August 24, 1993
5,226,143	Baird, et al.	July 6, 1993
5,214,778	Glider, et al.	May 25, 1993
5,212,785	Powers, et al.	May 18, 1993
5,210,866	Milligan, et al.	May 11, 1993
5,202,856	Glider, et al.	April 13, 1993
5,193,184	Belsan, et al.	March 9, 1993
5,193,168	Corrigan, et al.	March 9, 1993
5,185,876	Nguyen, et al.	February 9, 1993
5,155,845	Beal, et al.	October 13, 1992
5,124,987	Milligan, et al.	June 23, 1992
5,077,736	Dunphy, Jr., et al.	December 31, 1991
5,077,732	Fischer, et al.	December 31, 1991
4,961,224	Yung	October 2, 1990
4,897,874	Lidinsky, et al.	January 30, 1990
4,835,674	Collins, et al.	May 30, 1989
4,827,411	Arrowood, et al.	May 2, 1989
4,825,406	Bean, et al.	April 25, 1989
4,821,179	Jensen, et al.	April 11, 1989
4,811,278	Bean, et al.	March 7, 1989
4,807,180	Takeuchi, et al.	February 21, 1989
4,787,028	Finfrock, et al.	November 22, 1988
4,697,232	Brunelle, et al.	September 29, 1987
4,644,462	Matsubara, et al.	February 17, 1987
4,620,295	Aiken, Jr.	October 28, 1986
4,603,380	Easton, et al.	July 29, 1986
4,573,152	Greene, et al.	February 25, 1986
4,533,996	Hartung, et al.	August 6, 1985
4,504,927	Callan	March 12, 1985
4,455,605	Cormier, et al.	June 19, 1984
4,415,970	Swenson, et al.	November 15, 1983

Oracle-Huawei-NetApp Ex. 1024, pg. 2240

Ref #	Hits	Search Query	DBs	Default Operator	Plurals	Time Stamp
L1	19	scsi same (fibre adj channel) same interface same dma	USPAT	OR	OFF	2005/01/19 14:08
S1	71	storage adj2 router	USPAT	OR	OFF	2005/01/19 14:08
S2	24	scsi near5 ((fibre or fiber) adj channel) near storage	USPAT	OR	OFF	2005/01/13 07:22
S3	117	scsi near5 ((fibre or fiber) adj channel) near5 storage	USPAT	OR	OFF	2005/01/13 07:40
S4	49	scsi same ((fibre or fiber) adj channel) same storage	EPO; JPO; DERWENT; IBM_TDB	OR	OFF	2005/01/13 10:27
S5	4	scsi same ((fibre or fiber) adj channel) same bridge	EPO; JPO; DERWENT; IBM_TDB	OR	ON	2005/01/13 08:15
S6	97	scsi same ((fibre or fiber) adj channel) same bridge	USPAT	OR	ON	2005/01/13 07:58
S7	36	scsi same ((fibre or fiber) adj channel) same router	USPAT	OR	ON	2005/01/13 07:59
S8	197	scsi same ((fibre or fiber) adj channel) same adapter	USPAT	OR	ON	2005/01/13 07:59
S9	32	scsi same ((fibre or fiber) adj channel) same network same storage	EPO; JPO; DERWENT; IBM_TDB	OR	ON	2005/01/13 08:17
S10	664	scsi same ((fibre or fiber) adj channel) same network same storage	US-PGPUB	OR	ON	2005/01/13 08:18
S11	302	scsi same ((fibre or fiber) adj channel) same network same storage	USPAT	OR	ON	2005/01/13 09:06
S12	76	scsi same ((fibre or fiber) adj channel) same (map or mapping)	USPAT	OR	ON	2005/01/13 09:20
S13	10	scsi same ((fibre or fiber) adj channel) same (map or mapping)	EPO; JPO; DERWENT; IBM_TDB	OR	ON	2005/01/13 09:33
S14	0	scsi same ((fibre or fiber) adj channel) same (block adj level)	EPO; JPO; DERWENT; IBM_TDB	OR	ON	2005/01/13 09:33
S15	3	scsi same ((fibre or fiber) adj channel) same (block adj level)	USPAT	OR	ON	2005/01/13 09:34
S16	10	scsi same ((fibre or fiber) adj channel) same native same block	USPAT	OR	ON	2005/01/13 09:37
S17	141	scsi same ((fibre or fiber) adj channel) same block same (storage or disk or disc or tape)	USPAT	OR	ON	2005/01/13 10:12
S18	10	scsi same ((fibre or fiber) adj channel) same (network adj attached adj storage)	USPAT	OR	ON	2005/01/13 10:13

Oracle-Huawei-NetApp Ex. 1024, pg. 2241

S19	70	scsi same ((fibre or fiber) adj channel) and (network adj attached adj storage)	USPAT	OR	ON	2005/01/13 10:14
S20	1	(block adj level) same (network adj attached adj storage)	USPAT	OR	ON	2005/01/13 10:15
S21	74	scsi same ((fibre or fiber) adj channel) same shared same storage	USPAT	OR	ON	2005/01/13 10:17
S22	2944	(peer adj2 peer)	USPAT	OR	ON	2005/01/13 10:17
S23	23	(peer adj2 peer) same shared same storage	USPAT	OR	ON	2005/01/13 10:20
S24	42	(shared adj storage) same scsi	USPAT	OR	ON	2005/01/13 10:23
S25	200	network adj attached adj storage	USPAT	OR	ON	2005/01/13 10:52
S26	622	scsi same ((fibre or fiber) adj channel) same storage	USPAT	OR	OFF	2005/01/13 10:36
S27	738	scsi same ((fibre or fiber) adj channel) same interface	USPAT	OR	OFF	2005/01/13 10:43
S28	54	scsi same ((fibre or fiber) adj channel) same mapping	USPAT	OR	OFF	2005/01/13 10:43
S29	161	network adj attached adj storage	EPO; JPO; DERWENT; IBM_TDB	OR	ON	2005/01/13 11:34
S30	51	block adj server	EPO; JPO; DERWENT; IBM_TDB	OR	ON	2005/01/13 11:38
S31	163	block adj server	USPAT	OR	ON	2005/01/13 12:21
S32	28	network adj attached adj peripheral	USPAT	OR	ON	2005/01/13 13:15
S33	292	(710/74).CCLS.	USPAT	OR	OFF	2005/01/13 13:35
S34	84	(710/74).CCLS.	US-PGPUB	OR	OFF	2005/01/13 13:37
S36	2528	(711/111-114).CCLS.	USPAT	OR	OFF	2005/01/19 06:51
S37	332	((fibre or fiber) adj channel) same scsi same (storage or disk or disc) same controller	USPAT	OR	ON	2005/01/13 13:48
S38	592	network$ near5 storage near5 controller	USPAT	OR	ON	2005/01/14 08:27
S39	221	network$ near5 storage near5 controller	EPO; JPO; DERWENT; IBM_TDB	OR	ON	2005/01/14 08:04
S40	1025	(711/111-114).CCLS.	US-PGPUB	OR	OFF	2005/01/19 06:35
S41	1337	(711/111,112).CCLS.	USPAT	OR	OFF	2005/01/19 07:39
S42	1495	(711/113,114).CCLS.	USPAT	OR	OFF	2005/01/19 08:25
S43	100	atm same scsi same ((fiber or fibre) adj channel)	USPAT	OR	OFF	2005/01/19 08:37
S44	372	atm same ((fiber or fibre) adj channel)	USPAT	OR	OFF	2005/01/19 08:41
S45	2894	S40 or S41 or S42 or S43 or S44	USPAT	OR	OFF	2005/01/19 08:41

Oracle-Huawei-NetApp Ex. 1024, pg. 2242

S46	8	scsi same fibre same port same adaptor	USPAT	OR	ON	2005/01/19 12:35
S47	27	scsi same fibre same adaptor	USPAT	OR	ON	2005/01/19 12:37
S48	36	scsi same fibre same converter	USPAT	OR	ON	2005/01/19 12:39
S49	257	(710/315).CCLS.	USPAT	OR	OFF	2005/01/19 12:42

Oracle-Huawei-NetApp Ex. 1024, pg. 2243

IN THE UNITED STATES PATENT AND TRADEMARK OFFICE	
NOTIFICATION OF LITIGATION UNDER 37 C.F.R. 1.565	Atty. Docket No. **CROSS1120-14**

64660 U.S.PTO
12/13/04

Applicant **Geoffrey B. Hoese, et al.**	
Application Number **90/007,123**	Date Filed **07/19/2004**
Title **Storage Router and Method for Providing Virtual Local Storage**	
Group Art Unit **7590**	Examiner **Fleming, Fritz**
Confirmation Number: **2293**	

Commissioner for Patents
P.O. Box 1450
Alexandria, VA 22313-1450

Certificate of Mailing Under 37 C.F.R. §1.8

I hereby certify that this correspondence is being deposited with the United States Postal Service as First Class Mail in an envelope addressed to Commissioner for Patents, P.O. Box 1450, Alexandria, VA 22312-1450 on **December 8, 2004**.

Janice Pampell
Janice Pampell

Dear Sir:

This notification is filed for the sole purpose to inform the Examiner of prior and concurrent litigation involving United States Patent No. 5,941,972 (the "'972 Patent") and United States Patent No. 6,425,035 (the "'035 Patent") as required under 35 CFR 1.565. This is not and should not be construed as a submission under 35 CFR 1.530 as it does not discuss why the subject matter as claimed in these patents is not anticipated nor rendered obvious.

[redacted]

PRIOR AND ONGOING LITIGATION

The '972 Patent was held valid and infringed in *Crossroads Systems (Texas), Inc. v. Chaparral Network Storage, Inc.*, Western District of Texas, Civil Action No. A-00-CA-217-SS (the "Chaparral Litigation"). In the Chaparral Litigation, Crossroads Systems, Inc. ("Crossroads") alleged that storage router and RAID controller products by Chaparral Network Storage, Inc. ("Chaparral") infringed the '972 Patent. The district court found that the '972 Patent was valid; the jury found that Chaparral's storage router and RAID controllers infringed the '972 Patent and also subjected the defendant Chaparral to treble damages for willful infringement of the '972 Patent. A copy of the judgment is attached hereto as Exhibit A. The validity of the '972 Patent, the infringement of the '972 Patent by Chaparral's RAID controllers and the willful infringement finding were all upheld by the Federal Circuit. A copy of the Federal Circuit decision affirming the decision of the lower court is attached hereto as Exhibit B.

Another defendant paid Crossroads $15,000,000 to settle a patent infringement case involving the '972 Patent. In Crossroads *Systems (Texas), Inc., v. Pathlight Technology, Inc.*, Western District of Texas, Civil Action No. A-00CA-248-JN, Crossroads asserted that Pathlight Technology, Inc.'s ("Pathlight") storage router products infringed the '972 Patent. During the course of the litigation, Pathlight was acquired by a company named ADIC. ADIC settled the case with payment to Crossroads of $15M after closing arguments but before the jury returned its verdict.

Currently, there is ongoing litigation in which Dot Hill Systems Corporation's ("Dot Hill") RAID controller products are accused of infringing the '972 and '035 Patents. *See*, Crossroads *Systems, Inc. v. Dot Hill Systems Corporation*, Western District of Texas, Case Number A-03-CV-754(SS). This litigation is pending.

[redacted]

This notification was served via first class mail on December 8, 2004 to Natu J. Patel at Wang and Patel, PC, 1301 Dove Street, Suite 1050, Newport Beach, CA 92660.

Respectfully submitted,

Sprinkle IP Law Group
Attorneys for Applicant

John L. Adair
Reg. No. 48,828

Date: December 9, 2004

1301 W. 25th Street
Suite 408
Austin, Texas 78705
Tel. (512) 637-9220
Fax. (512) 371-9088

[redacted]

IN THE UNITED STATES PATENT AND TRADEMARK OFFICE	
CERTIFICATE OF SERVICE UNDER 37 C.F.R. 1.248	Atty. Docket No. **CROSS1120-14**

Applicant **Geoffrey B. Hoese, et al.**	
Application Number **90/007,123**	Date Filed **07/19/2004**
Title **Storage Router and Method for Providing Virtual Local Storage**	
Group Art Unit **7590**	Examiner **Fleming, Fritz**
Confirmation Number: **2293**	

64660 U.S.PTO
12/13/04

Applicant hereby serves the Notification of Litigation Under 37 C.F.R. 1.565 in the above referenced case to:

Wang and Patel, PC
1301 Dove Street, Suite 1050
Newport Beach, CA 92660

As per 35 U.S.C. §1.248 service is made via first class mail on December 8, 2004.

Respectfully submitted,

Sprinkle IP Law Group

John L. Adair
Reg. No. 48,828

Dated: December 7, 2004

1301 W. 25th Street, Suite 408
Austin, Texas 78705
Tel. (512) 637-9220
Fax. (512) 371-9088

Enclosures

[redacted]

FILED
NOV 15 2001
CLERK, U.S. DISTRICT COURT
WESTERN DISTRICT OF TEXAS
BY
DEPUTY CLERK

IN THE UNITED STATES DISTRICT COURT
FOR THE WESTERN DISTRICT OF TEXAS
AUSTIN DIVISION

CROSSROADS SYSTEMS, (TEXAS), INC.,

Plaintiff,

-vs- **Case No. A-00-CA-217-SS**

CHAPARRAL NETWORK STORAGE, INC.,

Defendant.

FINAL JUDGMENT

BE IT REMEMBERED on the 4th day of September 2001, the Court called the above-captioned matter, and all parties appeared through their appropriate representatives and counsel of record and announced ready for trial, and a jury composed of seven legally qualified jurors having been empaneled and this case proceeded to trial on September 4, 2001, and on September 6, 2001, the plaintiff rested its case and the defendant filed a motion for judgment pursuant to Rule 50 of the Federal Rules of Civil Procedure and the Court overruled said motion with the exception of the issue of "contributory inducement," and the trial proceeded until September 11, 2001, when the defendant rested, and thereafter the plaintiff filed its motion for judgment as a matter of law pursuant to Rule 50 of the Federal Rules of Civil Procedure and the defendant renewed its Rule 50 motion and the Court overruled all motions with the exception of plaintiff's motion on the defense of "definiteness" and the case proceeded with all parties closing on September 11, 2001, and all parties renewing their motions, and the Court overruling all Rule 50 motions, and after the Court had instructed the jury

179

and all counsel had made their final arguments, the case was submitted to the jury on the 12th day of September 2001, and on that said day, the jury returned its verdict answering the questions as follows:

Question No. 1:	Yes		
	1-14		
Question 2:	Not answered		
Question 3:	Yes		
	7-14		
Question 4:	Yes		
	7-14		
Question 5:	Router	RAID	
	167,247	1,371,693	
	5%	3%	
	8365.00	41,150.79	49,515.79
Question 6:	Yes		
	1-14		
Question 7:	No		
Question 8:	No		
Question 9:	No		

Said verdict was signed by the presiding juror who advised in open court it was a unanimous verdict and the verdict was accepted by the Court and filed by the Clerk. Thereafter, the parties filed motions and on this date the Court has entered its orders disposing of all motions pending and, based upon the pleadings, trial record, and the law, enters this final judgment:

Oracle-Huawei-NetApp Ex. 1024, pg. 2249

IT IS ORDERED, ADJUDGED and DECREED that the plaintiff Crossroads Systems (Texas), Inc., do have and recover judgment of and against the defendant Chaparral Network Storage, Inc., for the total sum of $148,547.37 with interest as of July 11, 2001, in the amount of 2.40 percent per annum until paid, plus all costs of suit.

IT IS FURTHER ORDERED, ADJUDGED and DECREED that:

1. Chaparral Network Storage, Inc., has infringed claims 1-14 of the '972 patent in making, using, offering to sell, and selling certain routers and RAID controllers, including but not limited to the models listed in Exhibit 1 attached hereto and incorporated by reference and including any other products that provide access controls in a way that is substantially similar to any product listed in Exhibit 1.

2. Claims 1-14 of the '972 patent are valid.

3. Pursuant to 35 U.S.C. § 154, Crossroads Systems (Texas), Inc., has the exclusive right in the United States to make, have made, use, sell, offer for sell, and import products covered by, or coming within the scope of any of claims 1-14 of the '972 patent.

4. Chaparral has infringed Crossroads' rights in making, offering to sell, and selling router and RAID controller products that use, embody, or perform the inventions of claims 1-14 of the '972 patent.

5. Chaparral has contributorily infringed and induced the infringement of claims 7-14 of the '972 patent by providing third parties with the means of infringing claims 7-14 of the '972 patent and by instructing third parties to infringe claims 7-14 of the '972 patent.

6. By reason of the infringement of the '972 patent, Chaparral Network Storage, Inc., its officers, directors, agents, servants, employees, attorneys, and all persons acting in concert

[redacted]

Oracle-Huawei-NetApp Ex. 1024, pg. 2250

or participation with them who receive actual notice of this order by personal service or otherwise, are enjoined as of this date from infringing any of claims 1-14 of Crossroads Systems (Texas), Inc.'s '972 patent, including but not limited to the router and RAID controller models identified on Exhibit 1 and including any other router or RAID controllers that are substantially similar to any product listed in Exhibit 1.

7. Chaparral Network Storage, Inc., its officers, directors, agents, servants, employees, attorneys, and all persons acting in concert or participation with them who receive actual notice of this order by personal service or otherwise are enjoined as of this date from contributorily infringing or inducing the infringement of any of claims 7-14 of Crossroads Systems (Texas), Inc.'s '972 patent.

8. IT IS FURTHER ORDERED that Chaparral Network Storage, Inc., will, no later than 30 business days from the date of the entry of this injunction obtain from any dealers, distributors, or sales agents within the United States and take into Chaparral's possession all products which are owned by Chaparral but which are now or will be in the possession or under control of such dealers, distributors, or sales agents and which infringe any of the claims 1-14 of the '972 patent (including but not limited to the products identified in Exhibit 1 and any other router or RAID controllers that are substantially similar to any product listed in Exhibit 1).

9. The United States District Court for the Western District of Texas, Austin Division, retains jurisdiction to enforce the terms of this injunction.

IT IS SO ORDERED this the 15th day of November 2001.

Sam Sparks
UNITED STATES DISTRICT JUDGE

[redacted]

Oracle-Huawei-NetApp Ex. 1024, pg. 2251

IN THE UNITED STATES DISTRICT COURT
FOR THE WESTERN DISTRICT OF TEXAS
AUSTIN DIVISION

CROSSROADS SYSTEMS, (TEXAS), INC.,

Plaintiff,

-vs-

Case No. A-00-CA-217-SS

CHAPARRAL NETWORK STORAGE, INC.,

Defendant.

EXHIBIT 1 TO PERMANENT INJUNCTION

Chaparral Router Products that Infringe U.S. Patent No. 5,941,972

FS 1220
FS 2620

Chaparral RAID Controller Products that Infringe U.S. Patent No. 5,941,972

G7313
G7324
G8324
K7313
K7413
A8526

[redacted]

RECEIVED
MAR 1 0 2003
CLERK, U.S. DISTRICT COURT
WESTERN DISTRICT OF TEXAS
BY _____ DEPUTY CLERK

NOTE: Pursuant to Fed. Cir. R. 47.6, this disposition is not citable as precedent. It is a public record. This disposition will appear in tables published periodically.

United States Court of Appeals for the Federal Circuit

FILED
MAR 1 0 2003
CLERK, U.S. DISTRICT COURT
WESTERN DISTRICT OF TEXAS
BY _____ DEPUTY CLERK

02-1158

CROSSROADS SYSTEMS, (TEXAS), INC.,

Plaintiff-Appellee,

v.

CHAPARRAL NETWORK STORAGE, INC.,

Defendant-Appellant.

FILED
U.S. COURT OF APPEALS FOR
THE FEDERAL CIRCUIT

FEB 1 2 2003

JAN HORBALY
CLERK

JUDGMENT

ON APPEAL from the United States District Court for the Western District of Texas

In CASE NO(S). 00-CV-217 and 00-CV-621

This CAUSE having been heard and considered, it is

ORDERED and ADJUDGED: AFFIRMED. See Fed. Cir. R. 36

Per Curiam (NEWMAN, SCHALL, and DYK, Circuit Judges).

CERTIFIED COPY
I HEREBY CERTIFY THIS DOCUMENT
IS A TRUE AND CORRECT COPY
OF THE ORIGINAL ON FILE.
UNITED STATES COURT OF APPEALS
FOR THE FEDERAL CIRCUIT
By: _____ Date: 3/5/03

ENTERED BY ORDER OF THE COURT

DATED: FEB 1 2 2003

Jan Horbaly, Clerk

ISSUED AS A MANDATE: MARCH 5, 2003

Costs Against Appellant:
Total $97.35

186

03/17/2003 MON 12:47 [TX/RX NO 6273]

UNITED STATES DEPARTMENT OF COMMERCE
Patent and Trademark Office
Address: ASSISTANT COMMISSIONER FOR PATENTS
Washington, D.C. 20231

APPLICATION NO./ CONTROL NO.	FILING DATE	FIRST NAMED INVENTOR / PATENT IN REEXAMINATION	ATTORNEY DOCKET NO.
90007123	07/19/04	5941972	I006-8900

Gray Cary Ware & Friedenrich LLP
1221 South MoPac Expressway , Suite 400
Austin, TX 78746-6875

EXAMINER
Fleming, Fritz

ART UNIT	PAPER
2182	5

DATE MAILED: 09/22/04

Please find below and/or attached an Office communication concerning this application or proceeding.

Commissioner of Patents and Trademarks

CC: Natu J. Patel
Wang & Patel, PC
1301 Dove Street, Suite 1050
Newport Beach CA 92660

PTO-90C (Rev.3-98)

UNITED STATES PATENT AND TRADEMARK OFFICE

Commissioner for Patents
United States Patent and Trademark Office
P.O. Box 1450
Alexandria, VA 22313-1450
www.uspto.gov

DO NOT USE IN PALM PRINTER

(THIRD PARTY REQUESTER'S CORRESPONDENCE ADDRESS)

EX PARTE REEXAMINATION COMMUNICATION TRANSMITTAL FORM

REEXAMINATION CONTROL NO. *90/007,123*.

PATENT NO. *5941972*.

ART UNIT *2182*.

Enclosed is a copy of the latest communication from the United States Patent and Trademark Office in the above identified *ex parte* reexamination proceeding (37 CFR 1.550(f)).

Where this copy is supplied after the reply by requester, 37 CFR 1.535, or the time for filing a reply has passed, no submission on behalf of the *ex parte* reexamination requester will be acknowledged or considered (37 CFR 1.550(g)).

Oracle-Huawei-NetApp Ex. 1024, pg. 2255

Order Granting / Denying Request For Ex Parte Reexamination	Control No.	Patent Under Reexamination	
	90/007,123	5941972	
	Examiner	Art Unit	
	Fritz M Fleming	2182	

--The MAILING DATE of this communication appears on the cover sheet with the correspondence address--

The request for *ex parte* reexamination filed *19 July 2004* has been considered and a determination has been made. An identification of the claims, the references relied upon, and the rationale supporting the determination are attached.

Attachments: a)☐ PTO-892, b)☐ PTO-1449, c)☐ Other: _____

1. ☒ The request for *ex parte* reexamination is GRANTED.

RESPONSE TIMES ARE SET AS FOLLOWS:

For Patent Owner's Statement (Optional): TWO MONTHS from the mailing date of this communication (37 CFR 1.530 (b)). **EXTENSIONS OF TIME ARE GOVERNED BY 37 CFR 1.550(c).**

For Requester's Reply (optional): TWO MONTHS from the **date of service** of any timely filed Patent Owner's Statement (37 CFR 1.535). **NO EXTENSION OF THIS TIME PERIOD IS PERMITTED.** If Patent Owner does not file a timely statement under 37 CFR 1.530(b), then no reply by requester is permitted.

2. ☐ The request for *ex parte* reexamination is DENIED.

This decision is not appealable (35 U.S.C. 303(c)). Requester may seek review by petition to the Commissioner under 37 CFR 1.181 within ONE MONTH from the mailing date of this communication (37 CFR 1.515(c)). **EXTENSION OF TIME TO FILE SUCH A PETITION UNDER 37 CFR 1.181 ARE AVAILABLE ONLY BY PETITION TO SUSPEND OR WAIVE THE REGULATIONS UNDER 37 CFR 1.183.**

In due course, a refund under 37 CFR 1.26 (c) will be made to requester:

a) ☐ by Treasury check or,

b) ☐ by credit to Deposit Account No. _____, or

c) ☐ by credit to a credit card account, unless otherwise notified (35 U.S.C. 303(c)).

Fritz M Fleming
Primary Examiner
Art Unit: 2182

cc:Requester (if third party requester)

[redacted]

Oracle-Huawei-NetApp Ex. 1024, pg. 2256

1. A substantial new question of patentability affecting claims 1-14 of United States Patent Number 5,941,972 is raised by the request for *ex parte* reexamination.

Extensions of time under 37 CFR 1.136(a) will not be permitted in these proceedings because the provisions of 37 CFR 1.136 apply only to "an applicant" and not to parties in a reexamination proceeding. Additionally, 35 U.S.C. 305 requires that *ex parte* reexamination proceedings "will be conducted with special dispatch" (37 CFR 1.550(a)). Extensions of time in *ex parte* reexamination proceedings are provided for in 37 CFR 1.550(c).

- The threshold for determining whether or not to grant a re-examination is set forth in MPEP 2242, quoted below:

For "a substantial new question of patentability" to be present, it is only necessary that: (>A<) the prior art patents and/or printed publications raise a substantial question of patentability regarding at least one claim, i.e., the teaching of the (prior art) patents and printed publications is such that a reasonable examiner would consider the teaching to be important in deciding whether or not the claim is patentable; and (*>B<) the same question of patentability as to the claim has not been decided by the Office in a previous examination >or pending reexamination< of the patent or in a final holding of invalidity by the Federal Courts in a decision on the merits involving the claim. It is not necessary that a "prima facie" case of unpatentability exist as to the claim in order for "a substantial new question of patentability" to be present as to the claim. Thus, "a substantial new question of patentability" as to a patent claim could be present even if the examiner would not necessarily reject the claim as either fully anticipated by, or obvious in view of, the prior >art< patents or printed publications. As to the importance of the difference between "a substantial new question of patentability" and a "prima facie" case of unpatentability see generally In re Etter, 756 F.2d 852, 857 n.5, 225 USPQ 1, 4 n.5 (Fed. Cir. 1985).*

[redacted]

Thus it is clear, that a granting of a re-examination does not necessarily mean that a prima facie case of unpatentability exists, just that the teachings be important when deciding claim patentability.

- The manner in which the art is to be applied in the request is discussed in MPEP 2217, quoted below:

The third sentence of 35 U.S.C. 302 indicates that the "request must set forth the pertinency and manner of applying cited prior art to every claim for which reexamination is requested." 37 CFR 1.510(b)(2) requires that the request include "[a]n identification of every claim for which reexamination is requested, and a detailed explanation of the pertinency and manner of applying the cited prior art to every claim for which reexamination is requested." If the request is filed by the patent owner, the request for reexamination may also point out how claims distinguish over cited prior art.

Where substantial new questions of patentability are presented under 35 U.S.C. 102(f) or (g), the prior invention of another must be disclosed in a patent or printed publication. Substantial new questions of patentability may also be presented under 35 U.S.C. 103 which are based on the above indicated portions of 35 U.S.C. 102. Substantial new questions of patentability may be found under 35 U.S.C. 102(f) / 103 or 102(g)/ 103 based on the prior invention of another disclosed in a patent or printed publication if the reference invention and the claimed invention were not commonly owned at the time the claimed invention was made. See, 35 U.S.C. 103(c) and MPEP § 706.02(l). See MPEP § 706.02(l)(1) for information pertaining to references which qualify as prior art under 35 U.S.C. 102(e)/103.

The mere citation of new patents or printed publications without an explanation does not comply with 37 CFR 1.510(b)(2). Requester must present an explanation of how the cited patents or printed publications are applied to all claims which requester considers to merit reexamination. This not only sets forth the requester's position to the Office, but also to the patent owner (where the patent owner is not the requester).

[redacted]

Given the above, requestor has, at a threshold minimum, provided a substantial new question of patentability, albeit not in a clear and concise manner. For example, requestor has dedicated pages 5-44 to various "substantial new questions of patentability", which are not entirely clear. Pages 5-11 allege anticipation by the MAXSTRAT GEN5 PRODUCT, but such an analysis seems to rely upon two printed publications in the form of Exhibits 10-12 interpreted in light of an additional declaration in the form of Exhibit 13. Pages 12-13 allege other controllers detailed in Exhibits 14-16. Pages 13-15 allege anticipation over the '209 Patent. Pages 15-21 combine the material of pages 5-13 with admissions, Haugdahl, and Bursky. Pages 21-27 appear to combine admissions/testimony with at least patents to Berman, Malladi, Boggs et al., Purhoit, Llorens et al., Cuenod et al., Chatwani et al., Arrowood et al., Haughdahl, Oeda et al., Yung, Hefferon et al., DeKoning et al., Abadi et al., Hunnicutt et al., Raz et al., and Dauerer et al. Pages 27-30 then add Derby et al., Isfeld et al., Sheu and Jones et al. Pages 30-42 then address a subset of the above, while pages 42-44 seem to summarize such. In order to grant the request for re-examination, the request indicates, at least, that the requestor considers claims 1-14 as being unpatentable over the MAXSTRAT GEN5 manuals of Exhibits 11-12. It is agreed that the consideration of the MAXSTRAT GEN5 manuals of Exhibits 11-12 raises a substantial new question of patentability, as to at least the patentability of claims 1-14 of the Hoese et al. patent. As pointed out in Exhibit 10, MAXSTRAT GEN5 manuals of Exhibits 11-12 teach the use of, amongst other things, of a network routing table, a buffer, the host interface ports, the device module controller, the two general purpose CPUs, the volumes, the ifp, and

[redacted]

the internal file system which were not present in the prosecution of the application that became the Hoese et al. patent. Further, there is a substantial likelihood that a reasonable examiner would consider these teachings important in deciding whether or not the claims are patentable. Accordingly, the MAXSTRAT GEN5 manuals of Exhibits 11 and 12 raise a substantial new question of patentability as to claims 1-14, which question has not been decided in a previous examination of the Hoese et al. patent. Thus claims 1-14 will be re-examined.

Addressing the other art cited in the request for re-examination, it is clear that the request for the re-examination should clearly and concisely set forth the cited prior art and the manner in which it is to be applied to the identified claims. Requestor has instead set forth a voluminous citation of prior art, with an inordinately large number of possible combinations of cited art, placing the burden of "explanation" on the examiner. Appendix C is described by the requestor as "Listing of ***possible*** prior art combinations showing obviousness." Turning to Appendix C, one finds a generic explanation that summarizes claim 1 (only claim 1) into elements A-G, and refers to the chart of Appendix B and Exhibit 22 for an accounting of what elements are found where. The explanation of Appendix C seems to conclude with the opinion that the mere fact that two references that teach all of the elements render a claim as obvious. The examiner would like to point to **MPEP 2143.01, Suggestion or Motivation To Modify the References**, where one finds:

> **The mere fact that references can be combined or modified does not render the resultant combination obvious unless the prior art also suggests the desirability of the combination.** In re Mills, 916 F.2d 680, 16 USPQ2d 1430 (Fed. Cir. 1990) (Claims were directed

[redacted]

> to an apparatus for producing an aerated cementitious composition by drawing air into the cementitious composition by driving the output pump at a capacity greater than the feed rate. The prior art reference taught that the feed means can be run at a variable speed, however the court found that this does not require that the output pump be run at the claimed speed so that air is drawn into the mixing chamber and is entrained in the ingredients during operation. Although a prior art device "may be capable of being modified to run the way the apparatus is claimed, there must be a suggestion or motivation in the reference to do so." 916 F.2d at 682, 16 USPQ2d at 1432.). See also In re Fritch, 972 F.2d 1260, 23 USPQ2d 1780 (Fed. Cir. 1992) (flexible landscape edging device which is conformable to a ground surface of varying slope not suggested by combination of prior art references).

For a specific example, appendix C, page 3, sets forth "Fibre Channel storage..." as a possible primary reference having claim elements ABCDFG with an astounding 54 individual secondary references with which "Fibre Channel storage..." is to be ***possibly*** combined with. The examiner is then supposed to go to Exhibit 22 to then interpret the shorthand of claim elements A-G of each reference in order to come up with the manner in which the cited art is to be applied in combination, thereby placing the burden on the examiner to provide the rationale to make the possible combinations. Furthermore, Exhibit 22 only goes up to claim 6, and not the identified patent claims 1-14. Finally, if the requestor had intended to apply the 200+ "possible prior art combinations showing obviousness" against the claims to form a basis for re-examination, then there should be a corresponding number of prima facie cases of obviousness in order to merit re-examination. Lacking such, the material of Appendix C would appear to provide a

cumulative IDS listing of references that individually disclose bits and pieces of claims 1-6, without setting forth the proper rejections under 35 U.S.C. 103.

2. The patent owner is reminded of the continuing responsibility under 37 CFR 1.565(a) to apprise the Office of any litigation activity, or other prior or concurrent proceeding, involving Patent No. 5,941,972 throughout the course of this reexamination proceeding. The third party requester is also reminded of the ability to similarly apprise the Office of any such activity or proceeding throughout the course of this reexamination proceeding. See MPEP §§ 2207, 2282 and 2286.

3. It is noted that an issue not within the scope of reexamination proceedings has been raised. The issue of the submission of references during prosecution of the patent will not be addressed in the course of this re-examination. The issue of the examination of related applications will not be addressed during the course of this re-examination, noting that some have matured into patents. The issue of secondary considerations and income/licensing will not be addressed during the course of this re-examination, unless raised by patent owner.

Any inquiry concerning this communication or earlier communications from the examiner should be directed to Fritz M Fleming whose telephone number is 703-308-1483. The examiner can normally be reached on M-F, 0600-1500.

If attempts to reach the examiner by telephone are unsuccessful, the examiner's supervisor, Jeffrey Gaffin can be reached on 703-308-3301. The fax phone number for the organization where this application or proceeding is assigned is 703-872-9306.

Information regarding the status of an application may be obtained from the Patent Application Information Retrieval (PAIR) system. Status information for published applications may be obtained from either Private PAIR or Public PAIR. Status information for unpublished applications is available through Private PAIR only. For more information about the PAIR system, see http://pair-direct.uspto.gov. Should you have questions on access to the Private PAIR system, contact the Electronic Business Center (EBC) at 866-217-9197 (toll-free).

Fritz M Fleming
Primary Examiner
Art Unit 2182

fmf

PINCHUS M. LAUFER, PH.D
SPECIAL PROGRAM EXAMINER
TECHNOLOGY CENTER 2100

[redacted]

UNITED STATES PATENT AND TRADEMARK OFFICE

UNITED STATES DEPARTMENT OF COMMERCE
United States Patent and Trademark Office
Address: COMMISSIONER FOR PATENTS
PO Box 1450
Alexandria, Virginia 22313-1450
www.uspto.gov

REEXAM CONTROL NUMBER	FILING OR 371 (c) DATE	PATENT NUMBER
90/007,123	07/19/2004	5941972

#3

CONFIRMATION NO. 2293

Natu J. Patel, Esq.
Wang & Patel, PC
1303 Dove Street Suite 1050
Newport Beach, CA 92660

Date Mailed: 08/02/2004

NOTICE OF REEXAMINATION REQUEST FILING DATE

(Third Party Requester)

Requester is hereby notified that the filing date of the request for reexamination is 07/19/2004, the date the required fee of $2,520 was received.

A decision on the request for reexamination will be mailed within three months from the filing date of the request for reexamination. (See 37 CFR 1.515(a)).

A copy of the Notice is being sent to the person identified by the requester as the patent owner. Further patent owner correspondence will be the latest attorney or agent of record in the patent file. (See 37 CFR 1.33). Any paper filed should include a reference to the present request for reexamination (by Reexamination Control Number).

cc: Patent Owner

Gray Cary Ware & Friedenrich LLP
1221 South MoPac Expressway Suite 400
Austin, TX 78746-6875

M. A. Fuetter

Office of Patent Legal Administration
Central Reexamination Unit (703) 308-9692

PART 3 - OFFICE COPY

UNITED STATES PATENT AND TRADEMARK OFFICE

UNITED STATES DEPARTMENT OF COMMERCE
United States Patent and Trademark Office
Address COMMISSIONER FOR PATENTS
PO Box 1450
Alexandria, Virginia 22313-1450
www.uspto.gov

REEXAM CONTROL NUMBER	FILING OR 371 (c) DATE	PATENT NUMBER
90/007,123	07/19/2004	5941972

#4

CONFIRMATION NO. 2293

REEXAM ASSIGNMENT NOTICE

Gray Cary Ware & Friedenrich LLP
1221 South MoPac Expressway Suite 400
Austin, TX 78746-6875

Date Mailed: 08/02/2004

NOTICE OF ASSIGNMENT OF REEXAMINATION REQUEST

The above-identified request for reexamination has been assigned to Art Unit 2111. All future correspondence to the proceeding should be identified by the control number listed above and directed to the assigned Art Unit.

A copy of this Notice is being sent to the latest attorney or agent of record in the patent file or to all owners of record. (See 37 CFR 1.33(c)). If the addressee is not, or does not represent, the current owner, he or she is required to forward all communications regarding this proceeding to the current owner(s). An attorney or agent receiving this communication who does not represent the current owner(s) may wish to seek to withdraw pursuant to 37 CFR 1.36 in order to avoid receiving future communications. If the address of the current owner(s) is unknown, this communication should be returned within the request to withdraw pursuant to Section 1.36.

cc: Third Party Requester(if any)

Natu J. Patel, Esq.
Wang & Patel, PC
1303 Dove Street Suite 1050
Newport Beach, CA 92660

M. A. Switky

Office of Patent Legal Administration
Central Reexamination Unit (703) 308-9692

PART 3 - OFFICE COPY

UNITED STATES PATENT AND TRADEMARK OFFICE

UNITED STATES DEPARTMENT OF COMMERCE
United States Patent and Trademark Office
Address: COMMISSIONER FOR PATENTS
PO Box 1450
Alexandria, Virginia 22313-1450
www.uspto.gov

REEXAM CONTROL NUMBER	FILING OR 371 (c) DATE	PATENT NUMBER
90/007,123	07/19/2004	5941972

#3

CONFIRMATION NO. 2293

Natu J. Patel, Esq.
Wang & Patel, PC
1303 Dove Street Suite 1050
Newport Beach, CA 92660

Date Mailed: 08/02/2004

NOTICE OF REEXAMINATION REQUEST FILING DATE

(Third Party Requester)

Requester is hereby notified that the filing date of the request for reexamination is 07/19/2004, the date the required fee of $2,520 was received.

A decision on the request for reexamination will be mailed within three months from the filing date of the request for reexamination. (See 37 CFR 1.515(a)).

A copy of the Notice is being sent to the person identified by the requester as the patent owner. Further patent owner correspondence will be the latest attorney or agent of record in the patent file. (See 37 CFR 1.33). Any paper filed should include a reference to the present request for reexamination (by Reexamination Control Number).

cc: Patent Owner

Gray Cary Ware & Friedenrich LLP
1221 South MoPac Expressway Suite 400
Austin, TX 78746-6875

M. A. Fuetter

Office of Patent Legal Administration
Central Reexamination Unit (703) 308-9692

PART 3 - OFFICE COPY

UNITED STATES PATENT AND TRADEMARK OFFICE

UNITED STATES DEPARTMENT OF COMMERCE
United States Patent and Trademark Office
Address COMMISSIONER FOR PATENTS
PO Box 1450
Alexandria, Virginia 22313-1450
www.uspto.gov

REEXAM CONTROL NUMBER	FILING OR 371 (c) DATE	PATENT NUMBER
90/007,123	07/19/2004	5941972

#4

CONFIRMATION NO. 2293

REEXAM ASSIGNMENT NOTICE

Gray Cary Ware & Friedenrich LLP
1221 South MoPac Expressway Suite 400
Austin, TX 78746-6875

Date Mailed: 08/02/2004

NOTICE OF ASSIGNMENT OF REEXAMINATION REQUEST

The above-identified request for reexamination has been assigned to Art Unit 2111. All future correspondence to the proceeding should be identified by the control number listed above and directed to the assigned Art Unit.

A copy of this Notice is being sent to the latest attorney or agent of record in the patent file or to all owners of record. (See 37 CFR 1.33(c)). If the addressee is not, or does not represent, the current owner, he or she is required to forward all communications regarding this proceeding to the current owner(s). An attorney or agent receiving this communication who does not represent the current owner(s) may wish to seek to withdraw pursuant to 37 CFR 1.36 in order to avoid receiving future communications. If the address of the current owner(s) is unknown, this communication should be returned within the request to withdraw pursuant to Section 1.36.

cc: Third Party Requester(if any)

Natu J. Patel, Esq.
Wang & Patel, PC
1303 Dove Street Suite 1050
Newport Beach, CA 92660

M. A. Switky

Office of Patent Legal Administration
Central Reexamination Unit (703) 308-9692

PART 3 - OFFICE COPY

Patent Assignment Abstract of Title

Total Assignments: 3 #2

Application #: 09001799 **Filing Dt:** 12/31/1997 **Patent #:** 5941972 **Issue Dt:** 08/24/1999

PCT #: NONE **Publication #:** NONE **Pub Dt:**

Inventors: GEOFFREY B. HOESE, JEFFRY T. RUSSELL

Title: STORAGE ROUTER AND METHOD FOR PROVIDING VIRTUAL LOCAL STORAGE

Assignment: 1

Reel/Frame:	Received:	Recorded:	Mailed:	Pages:
008929/0290	02/06/1998	12/31/1997	03/19/1998	4

Conveyance: ASSIGNMENT OF ASSIGNORS INTEREST (SEE DOCUMENT FOR DETAILS).

Assignors: HOESE, GEOFFREY B. **Exec Dt:** 12/22/1997

RUSSELL, JEFFRY T. **Exec Dt:** 12/22/1997

Assignee: CROSSROADS SYSTEMS, INC.
9390 RESEARCH BLVD., SUITE II-300
AUSTIN, TEXAS 78759

Correspondent: BAKER & BOTTS, L.L.P.
ANTHONY E. PETERMAN
2001 ROSS AVENUE
DALLAS, TX 75201-2980

Assignment: 2

Reel/Frame:	Received:	Recorded:	Mailed:	Pages:
011284/0218	12/05/2000	11/16/2000	02/05/2001	8

Conveyance: SECURITY AGREEMENT ✓

Assignor: CROSSWORLDS SOFTWARE, INC. **Exec Dt:** 06/30/2000

Assignee: SILICON VALLEY BANK
LOAN DOCUMENTATION HG150
3003 TASMAN DR
SANTA CLARA, CALIFORNIA 95054

Correspondent: SILICON VALLEY BANK
JACQUELYN LE
LOAN DOCUMENTATION HG150
3003 TASMAN DR.
SANTA CLARA, CA 95054

Assignment: 3

Reel/Frame:	Received:	Recorded:	Mailed:	Pages:
012785/0083	04/17/2002	04/03/2002	06/12/2002	2

Conveyance: RELEASE

Assignor: SILICON VALLEY BANK **Exec Dt:** 03/20/2002

Assignee: CROSSWORLDS SOFTWARE
577 AIRPORT BOULEVARD, SUITE 300
BURLINGAME, CALIFORNIA 94010

Correspondent: SILICON VALLEY BANK
MICHELLE GIANNINI
LOAN DOCUMENTATION HA155
3003 TASMAN DR.
SANTA CLARA, CALIFORNIA 95054

If you have any comments or questions concerning the data displayed, contact OPR / Assignments at 703-308-9723
Web interface last modified. Oct. 5, 2002

Oracle-Huawei-NetApp Ex. 1024, pg. 2269

Patent Assignment Abstract of Title

Total Assignments: 3 #2

Application #: 09001799 **Filing Dt:** 12/31/1997 **Patent #:** 5941972 **Issue Dt:** 08/24/1999

PCT #: NONE **Publication #:** NONE **Pub Dt:**

Inventors: GEOFFREY B. HOESE, JEFFRY T. RUSSELL

Title: STORAGE ROUTER AND METHOD FOR PROVIDING VIRTUAL LOCAL STORAGE

Assignment: 1

Reel/Frame:	Received:	Recorded:	Mailed:	Pages:
008929/0290	02/06/1998	12/31/1997	03/19/1998	4

Conveyance: ASSIGNMENT OF ASSIGNORS INTEREST (SEE DOCUMENT FOR DETAILS).

Assignors: HOESE, GEOFFREY B. **Exec Dt:** 12/22/1997

RUSSELL, JEFFRY T. **Exec Dt:** 12/22/1997

Assignee: CROSSROADS SYSTEMS, INC.
9390 RESEARCH BLVD., SUITE II-300
AUSTIN, TEXAS 78759

Correspondent: BAKER & BOTTS, L.L.P.
ANTHONY E. PETERMAN
2001 ROSS AVENUE
DALLAS, TX 75201-2980

Assignment: 2

Reel/Frame:	Received:	Recorded:	Mailed:	Pages:
011284/0218	12/05/2000	11/16/2000	02/05/2001	8

Conveyance: SECURITY AGREEMENT ✓

Assignor: CROSSWORLDS SOFTWARE, INC. **Exec Dt:** 06/30/2000

Assignee: SILICON VALLEY BANK
LOAN DOCUMENTATION HG150
3003 TASMAN DR
SANTA CLARA, CALIFORNIA 95054

Correspondent: SILICON VALLEY BANK
JACQUELYN LE
LOAN DOCUMENTATION HG150
3003 TASMAN DR.
SANTA CLARA, CA 95054

Assignment: 3

Reel/Frame:	Received:	Recorded:	Mailed:	Pages:
012785/0083	04/17/2002	04/03/2002	06/12/2002	2

Conveyance: RELEASE

Assignor: SILICON VALLEY BANK **Exec Dt:** 03/20/2002

Assignee: CROSSWORLDS SOFTWARE
577 AIRPORT BOULEVARD, SUITE 300
BURLINGAME, CALIFORNIA 94010

Correspondent: SILICON VALLEY BANK
MICHELLE GIANNINI
LOAN DOCUMENTATION HA155
3003 TASMAN DR.
SANTA CLARA, CALIFORNIA 95054

RECORDED: 03/20/2002

If you have any comments or questions concerning the data displayed, contact OPR / Assignments at 703-308-9723
Web interface last modified. Oct. 5, 2002

Oracle-Huawei-NetApp Ex. 1024, pg. 2271

Listing of Every Patent and Printed Publication Relied Upon

Printed Publication	Author	Publication Date	Where Found
CRD-5500 SCSI RAID Controller User's Manual, Rev. 1.3	CMD Technology, Inc.	November 21, 1996	Exh. 14
DIGITAL StorageWorks HSZ70 Array Controller HSOF Version 7.0 EK–CLI70–RM. A01 CLI Reference Manual.	Digital Equipment Corporation	July, 1997	Exh. 5, MSJ Exh. 8
DIGITAL StorageWorks HSZ70 Array Controller HSOF Version 7.0 EK–HSZ70–SV. A01 Service Manual.	Digital Equipment Corporation	July, 1997	Exh. 5, MSJ Exh. 6
DIGITAL StorageWorks HSZ70 Array Controller HSOF Version 7.0 K-HSZ70-CG. A01 Configuration Guide.	Digital Equipment Corporation	July, 1997	Exh. 5, MSJ Exh. 7
Fiber channel (FCS)/ATM interworking: a design solution	Anzaloni, et al.	1993	Exh. 1
Fibre channel storage interface for video-on-demand servers	Chen, et al.	1996	Exh. 1
Gen5 S-SERIES XL System Guide Revision 1.01	MAXIMUM STRATEGY INC.	June 11, 1996	Exh. 11
Graphical User Interface for MAXSTRAT Gen5/Gen-S Servers User's Guide 1.1	MAXSTRAT Corporation (formerly MAXIMUM STRATEGY INC.)	January 6, 1997	Exh.12
High Performance Data Transfers Using Network-Attached Peripherals at the National Storage Laboratory	Hyer, et al.	February 26, 1993	Exh. 1
IFT-3000 SCSI to SCSI Disk Array Controller Instruction Manual Revision 2.0	Infortrend Technologies, Inc.	1995	Exh. 16
Implementing a Fibre Channel SCSI transport	Snively	1994	Exh. 1
Local-Area Networks for the IBM PC	Haugdahl	December, 1984	Exh. 18
New serial I/Os speed storage subsystems	Bursky	February 6, 1995	Exh. 19
SCSI applications on Fibre Channel	Snively	1992	Exh. 1

Copies of all U.S. Patents are found in Exhibit 1

U.S. Patent No.	Patentee	Issue date
6,219,771	Kikuchi, et al.	April 17, 2001
6,185,203	Berman	February 6, 2001
6,108,684	DeKoning, et al.	August 22, 2000
6,098,149	Ofer, et al.	August 1, 2000
6,081,849	Born, et al.	June 27, 2000
6,073,218	DeKoning, et al.	June 6, 2000
6,073,209	Bergsten	June 6, 2000
6,055,603	Ofer, et al.	April 25, 2000
5,959,994	Boggs, et al.	September 28, 1999
5,935,260	Ofer	August 10, 1999
5,933,824	DeKoning, et al.	August 3, 1999
5,889,952	Hunnicutt, et al.	March 30, 1999
5,860,137	Raz, et al.	January 12, 1999
5,848,251	Lomelino, et al.	December 8, 1998

Oracle-Huawei-NetApp Ex. 1024, pg. 2272

U.S. Patent No.	Patentee	Issue date
5,835,496	Yeung, et al.	November 10, 1998
5,812,754	Lui, et al.	September 22, 1998
5,809,328	Nogales, et al.	September 15, 1998
5,805,816	Picazo, Jr., et al.	September 8, 1998
5,802,278	Isfeld, et al.	September 1, 1998
5,781,715	Sheu	July 14, 1998
5,768,623	Judd, et al.	June 16, 1998
5,748,924	Llorens, et al.	May 5, 1998
5,727,218	Hotchkin	March 10, 1998
5,664,107	Chatwani, et al.	September 2, 1997
5,659,756	Hefferon, et al.	August 19, 1997
5,642,515	Jones, et al.	June 24, 1997
5,638,518	Malladi	June 10, 1997
5,634,111	Oeda, et al.	May 27, 1997
5,632,012	Belsan, et al.	May 20, 1997
5,621,902	Cases, et al.	April 15, 1997
5,613,082	Brewer, et al.	March 18, 1997
5,581,724	Belsan, et al.	December 3, 1996
5,581,709	Ito, et al.	December 3, 1996
5,568,648	Coscarella, et al.	October 22, 1996
5,564,019	Beausoleil, et al.	October 8, 1996
5,548,791	Casper, et al.	August 20, 1996
5,544,313	Shachnai, et al.	August 6, 1996
5,537,585	Blickenstaff, et al.	July 16, 1996
5,519,695	Purohit, et al.	May 21, 1996
5,511,169	Suda	April 23, 1996
5,507,032	Kimura	April 9, 1996
5,504,857	Baird, et al.	April 2, 1996
5,496,576	Jeong	March 5, 1996
5,495,474	Olnowich, et al.	February 27, 1996
5,491,812	Pisello, et al.	February 13, 1996
5,487,077	Hassner, et al.	January 23, 1996
5,471,609	Yudenfriend, et al.	November 28, 1995
5,469,576	Dauerer, et al.	November 21, 1995
5,463,754	Beausoleil, et al.	October 31, 1995
5,459,857	Ludlam, et al.	October 17, 1995
5,452,421	Beardsley, et al.	September 19, 1995
5,450,570	Richek, et al.	September 12, 1995
5,430,855	Walsh, et al.	July 4, 1995
5,426,637	Derby, et al.	June 20, 1995
5,423,026	Cook, et al.	June 6, 1995
5,420,988	Elliott	May 30, 1995
5,418,909	Jackowski, et al.	May 23, 1995
5,416,915	Mattson, et al.	May 16, 1995
5,410,697	Baird, et al.	April 25, 1995
5,410,667	Belsan, et al.	April 25, 1995
5,403,639	Belsan, et al.	April 4, 1995
5,396,596	Hashemi, et al.	March 7, 1995
5,388,246	Kasai	February 7, 1995
5,388,243	Glider, et al.	February 7, 1995
5,379,398	Cohn, et al.	January 3, 1995
5,379,385	Shomler	January 3, 1995

Page 2 of 2006

U.S. Patent No.	Patentee	Issue date
5,367,646	Pardillos, et al.	November 22, 1994
5,361,347	Glider, et al.	November 1, 1994
5,331,673	Elko, et al.	July 19, 1994
5,317,693	Elko, et al.	July 19, 1994
5,315,657	Abadi, et al.	May 24, 1994
5,301,290	Tetzlaff, et al.	April 5, 1994
5,297,262	Cox, et al.	March 22, 1994
5,247,692	Fujimura	September 21, 1993
5,247,638	O'Brien, et al.	September 21, 1993
5,239,654	Ing-Simmons, et al.	August 24, 1993
5,226,143	Baird, et al.	July 6, 1993
5,214,778	Glider, et al.	May 25, 1993
5,212,785	Powers, et al.	May 18, 1993
5,210,866	Milligan, et al.	May 11, 1993
5,202,856	Glider, et al.	April 13, 1993
5,193,184	Belsan, et al.	March 9, 1993
5,193,168	Corrigan, et al.	March 9, 1993
5,185,876	Nguyen, et al.	February 9, 1993
5,155,845	Beal, et al.	October 13, 1992
5,124,987	Milligan, et al.	June 23, 1992
5,077,736	Dunphy, Jr., et al.	December 31, 1991
5,077,732	Fischer, et al.	December 31, 1991
4,961,224	Yung	October 2, 1990
4,897,874	Lidinsky, et al.	January 30, 1990
4,835,674	Collins, et al.	May 30, 1989
4,827,411	Arrowood, et al.	May 2, 1989
4,825,406	Bean, et al.	April 25, 1989
4,821,179	Jensen, et al.	April 11, 1989
4,811,278	Bean, et al.	March 7, 1989
4,807,180	Takeuchi, et al.	February 21, 1989
4,787,028	Finfrock, et al.	November 22, 1988
4,697,232	Brunelle, et al.	September 29, 1987
4,644,462	Matsubara, et al.	February 17, 1987
4,620,295	Aiken, Jr.	October 28, 1986
4,603,380	Easton, et al.	July 29, 1986
4,573,152	Greene, et al.	February 25, 1986
4,533,996	Hartung, et al.	August 6, 1985
4,504,927	Callan	March 12, 1985
4,455,605	Cormier, et al.	June 19, 1984
4,415,970	Swenson, et al.	November 15, 1983

Oracle-Huawei-NetApp Ex. 1024, pg. 2274

OIPE JC105 JUL 19 2004 PATENT & TRADEMARK OFFICE

Reexam

PTO/SB/57 (04-04)
Approved for use through 04/30/2007. OMB 0651-0033
U.S. Patent and Trademark Office; U.S. DEPARTMENT OF COMMERCE
Under the Paperwork Reduction Act of 1995, no persons are required to respond to a collection of information unless it displays a valid OMB control number.

(Also referred to as FORM PTO-1465)

REQUEST FOR *EX PARTE* REEXAMINATION TRANSMITTAL FORM

66548 U.S. PTO
90007123

66548 U.S. PTO
07/19/04
07/19/04

Address to:
Mail Stop *Ex Parte* Reexam
Commissioner for Patents
P.O. Box 1450
Alexandria, VA 22313-1450

Attorney Docket No.: I006-8900

Date: July 19, 2004

1. [X] This is a request for *ex parte* reexamination pursuant to 37 CFR 1.510 of patent number _5,941,972_____ issued __August 24, 1999_____. The request is made by:

   [ ] patent owner. [X] third party requester.

2. [X] The name and address of the person requesting reexamination is:

   __Natu J. Patel, Esq., Wang & Patel PC_____

   __1301 Dove Street, Suite 1050_____

   __Newport Beach, CA 92660_____

3. [X] a. A check in the amount of $_2520.00_____ is enclosed to cover the reexamination fee, 37 CFR 1.20(c)(1);

   [ ] b. The Director is hereby authorized to charge the fee as set forth in 37 CFR 1.20(c)(1) to Deposit Account No. _____ (submit duplicate of this form for fee processing); or

   [ ] c. Payment by credit card. Form PTO-2038 is attached.

4. [X] Any refund should be made by [X] check or [ ] credit to Deposit Account No._____. 37 CFR 1.26(c). If payment is made by credit card, refund must be to credit card account.

5. [X] A copy of the patent to be reexamined having a double column format on one side of a separate paper is enclosed. 37 CFR 1.510(b)(4)

6. [ ] CD-ROM or CD-R in duplicate, Computer Program (Appendix) or large table

7. [ ] Nucleotide and/or Amino Acid Sequence Submission
   If applicable, all of the following are necessary.

   a. [ ] Computer Readable Form (CRF)
   b. Specification Sequence Listing on:

      i. [ ] CD-ROM (2 copies) or CD-R (2 copies); **or**
      ii. [ ] paper

   c. [ ] Statements verifying identity of above copies

8. [ ] A copy of any disclaimer, certificate of correction or reexamination certificate issued in the patent is included.

9. [X] Reexamination of claim(s) __1 through 14 (all claims)_____is requested.

10. [X] A copy of every patent or printed publication relied upon is submitted herewith including a listing thereof on Form PTO-1449 or equivalent.

07/22/2004 MTWITTY 00000001 90007123

11. [ ] An English language translation of all necessary and pertinent non-English language patents and/or printed publications is included.

01 FC:1812 2520.00 DP

This collection of information is required by 37 CFR 1.510. The information is required to obtain or retain a benefit by the public which is to file (and by the USPTO to process) an application. Confidentiality is governed by 35 U.S.C. 122 and 37 CFR 1.14. This collection is estimated to take 2 hours to complete, including gathering, preparing, and submitting the completed application form to the USPTO. Time will vary depending upon the individual case. Any comments on the amount of time you require to complete this form and/or suggestions for reducing this burden, should be sent to the Chief Information Officer, U.S. Patent and Trademark Office, U.S. Department of Commerce, P.O. Box 1450, Alexandria, VA 22313-1450. DO NOT SEND FEES OR COMPLETED FORMS TO THIS ADDRESS. **SEND TO: Mail Stop *Ex Parte* Reexam, Commissioner for Patents, P.O. Box 1450, Alexandria, VA 22313-1450.**
If you need assistance in completing the form, call 1-800-PTO-9199 and select option 2.

Oracle-Huawei-NetApp Ex. 1024, pg. 2275

12. [X] The attached detailed request includes at least the following items:

a. A statement identifying each substantial new question of patentability based on prior patents and printed publications. 37 CFR 1.510(b)(1)
b. An identification of every claim for which reexamination is requested, and a detailed explanation of the pertinency and manner of applying the cited art to every claim for which reexamination is requested. 37 CFR 1.510(b)(2)

13. [ ] A proposed amendment is included (only where the patent owner is the requester). 37 CFR 1.510(e)

14. [X] a. It is certified that a copy of this request (if filed by other than the patent owner) has been served in its entirety on the patent owner as provided in 37 CFR 1.33(c).
The name and address of the party served and the date of service are:

_Gray Cary Ware & Freidenrich, LLP, Atn: Tracy McCreight, Esq.,_____

_1221 S. MoPac Expressway, Suite 400_____

_Austin, TX 78746-6875_____

Date of Service: ___July 19, 2004_____; or

[ ] b. A duplicate copy is enclosed since service on patent owner was not possible.

15. Correspondence Address: Direct all communication about the reexamination to:

[X] Customer Number: ***37819***

OR

[ ] Firm or Individual Name					
Address (line 1)					
Address (line 2)					
City		State		Zip	
Country					
Telephone		Fax			

16. [X] The patent is currently the subject of the following concurrent proceeding(s):
[ ] a. Copending reissue Application No. _____.
[ ] b. Copending reexamination Control No. _____.
[ ] c. Copending Interference No. _____.
[X] d. Copending litigation styled:

__Crossroads Systems, Inc. v. Dot Hill Systems Corporation, U.S.D.C. for Western District of Texas,__

__ Case Number A-03-CV-754(SS)_____

WARNING: Information on this form may become public. Credit card information should not be included on this form. Provide credit card information and authorization on PTO-2038.

_____ __**July 19, 2004**_____
Authorized Signature *Date*

__Natu J. Patel_____ ___39559_____ [ ] *For Patent Owner Requester*
Typed/Printed Name *Registration No., if applicable* [X] *For Third Party Requester*

Oracle-Huawei-NetApp Ex. 1024, pg. 2276

IN THE UNITED STATES PATENT AND TRADEMARK OFFICE

Inventor: Hoese, et al. **Title of Invention:** **Storage router and method for providing virtual local storage** **Issued: August 24, 1999** **Patent No.: 5,941,972**	:	**REQUEST FOR EX PARTE REEXAMINATION**

Mail Stop Ex Parte Reexam
Commissioner for Patents
P.O. Box 1450
Alexandria, VA 22313-1450

REQUEST FOR EX PARTE REEXAMINATION

Dear Sir:

This is a Request for Ex Parte Reexamination of Claims 1 through 14 of the above identified United States Patent. It is believed that newly discovered prior art submitted herewith, which was not considered by the Patent Office during the prosecution of the above Patent, raises a substantial new question of Patentability with respect to Claims 1 through 14. Accordingly, reexamination under 35 U.S.C. §§ 302-307 pursuant to 37 C.F.R. § 1.510, et seq. is hereby respectfully requested.

In accordance with 37 C.F.R. § 1.510, the following is provided herein:

37 C.F.R. § 1.510(a)	Prior art cited under 37 C.F.R. § 1.501, infra. Fee for ex parte reexamination as per 37 C.F.R. 1.20(c)(1), $2,520.00, included with petition.

Oracle-Huawei-NetApp Ex. 1024, pg. 2277

37 C.F.R. § 1.510(b)(1)	A statement indicating each substantial new question of Patentability based on prior Patents and printed publications, infra.
37 C.F.R. § 1.510(b)(2)	An identification of every claim for which reexamination is requested, and a detailed explanation of the pertinency and manner of applying the cited prior art to every claim for which reexamination is requested, infra.
37 C.F.R. § 1.510(b)(3)	A copy of every Patent or printed publication relied upon or referred to in paragraph (b)(1) and (2) of this section, with listing (Exhibit 1).
37 C.F.R. § 1.510(b)(4)	A copy of the entire Patent including the front face, drawings, and specification/claims (in double column format) for which reexamination is requested, and a copy of any disclaimer, certificate of correction, or reexamination certificate issued in the Patent (Exhibit 2).
37 C.F.R. § 1.510(b)(4)	A certification that a copy of the request filed by a person other than the Patent owner has been served in its entirety on the Patent owner at the address as provided for in § 1.33(c). The name and address of the party served must be indicated (Exhibit 3).

Attorney Docket No.

Oracle-Huawei-NetApp Ex. 1024, pg. 2278

I. INTRODUCTION

This request is based upon numerous prior patents and printed publications, including 77 U.S. Patents and 6 printed articles, most of which were not previously considered by the Patent Office in granting the above-referenced patent. It is believed that Claims 1 through 14 of U.S. Patent No. 5,941,972 (the '972 Patent) are invalid:

1) pursuant to 35 U.S.C. §102 as being anticipated by the Maxstrat GEN5 controller product;
2) under 35 U.S.C. §103 as being obvious;
   i) in light of the patentees' deposition and trial testimony that the invention amounts to nothing more than simply adding "access controls" to a prior art storage router and such a simple modification was obvious in light of a number of patents, products and motivations to make such a combination; and
   ii) because motivations to combine the prior art inevitably would lead one skilled in the art to arrive at the alleged invention embodied in the '972 Patent.

This request is served concurrently with a request for reexamination of U.S. Patent Nos. 6,421,753 (the '753 Patent), 6,425,035 (the '035 Patent), 6,425,036 (the '036 Patent), and 6,738,854 (the '854 Patent), collectively referred to as the "Related Patents." The '972 Patent was the parent of the Related Patents.

II. BACKGROUND

The invention described and claimed in the '972 Patent is currently assigned to Crossroads Systems (Texas), Inc. ("Crossroads").

The '972 Patent was the parent of the Related Patents, and all five Patent specifications have identical figures and nearly identical written descriptions - the only differences can be found in the claims, and even those differences are minimal. A chart

Oracle-Huawei-NetApp Ex. 1024, pg. 2279

depicting the differences in the claims of the '972, '036, '035 and '854 Patents is included herein (Exhibit 4).

The '972 and '035 Patents are currently being litigated in the case of Crossroads Systems, Inc. v. Dot Hill Systems Corporation, Western District of Texas, Case Number A-03-CV-754(SS) ("*Crossroads v. Dot Hill*"). On June 26, 2004, Dot Hill submitted a Motion for Summary Judgment ("MSJ") to the Court, a copy of which is included herein. (Exhibit 5). The Motion requests a finding of invalidity based upon: 1) the '035 Patent being anticipated by, or rendered obvious in light of, prior art; and 2) the '972 Patent being obvious in light of prior art.

Specifically, the MSJ argument is based partially upon undisputed prior art in the form of the HSZ70 array controller designed and manufactured by Digital Equipment Corporation ("DEC") and related, published product manuals. Further, the MSJ contains three declarations from former DEC employees who were involved in the design and manufacture of the HSZ70 that clearly establish the date of conception, use, and publication of the manuals of the DEC HSZ70 as long before the earliest alleged conception dates for the '035 and '972 Patents. (See Exhibit 5).

The HSZ70 product was on sale before the issuance of the '972 and Related Patents, yet the Patentees did not disclose this relevant prior art to the USPTO during the examination of the Patents. (See Exhibit 5). Even worse, Dot Hill's previous counsel gave to Crossroads' patent counsel copies of the HSZ70 manuals prior to the issuance of the '854 Patent, and yet the Patentees still did not disclose this relevant prior art to the USPTO during the examination of that patent. Dot Hill earnestly encourages the examiner to review the attached copy of the MSJ and corresponding declarations, which have been filed with the Court, to evaluate the impact of the DEC HSZ70 product literature on the portfolio of Related Patents. (See Exhibit 5).

Further, inventors Hoese and Russell have at least six (6) pending applications that are continuations claiming priority based upon the '972 patent application filing date.

Oracle-Huawei-NetApp Ex. 1024, pg. 2280

The Application Numbers of the pending applications are 10/023786, 10/081082, 10/081110, 10/081114, 10/361283 and 10/658163. As each of these applications depends upon the '972 patent application, Dot Hill contends that each application suffers from the same critical infirmity as the '972 patent. Dot Hill cannot pursue reexamination of the pending applications; nevertheless, Dot Hill respectfully requests that these applications and any other pending applications depending on the '972 Patent or any Related Patent be examined in light of this reexamination petition and the petitions for the Related Patents.

III. PRIOR LITIGATION INVOLVING THE '972 PATENT

This is a unique case that presents the examiner with a wealth of information to assist in the reexamination.

The '972 Patent was litigated on two separate occasions and the Court has defined terms in the '972 Patent as a result of a Markman Order in the case of *Crossroads Systems, (Texas), Inc. v. Chaparral Network Storage, Inc.*, Western District of Texas, Civil Action Number A-00-CA-217-SS ("*Chaparral*"). A copy of the *Chaparral* Court's Markman Order appears in Exhibit 6. (Also *see Crossroads Systems, (Texas), Inc. v. Pathlight Technology, Inc.*, Western District of Texas, Civil Action Number A-00-CA-248-SS). A district court's finding is binding upon the Patent examiner in a reexamination. *Marlow Industries, Inc. v. Igloo Products Corp.*, 2002 WL 485698, *4 - 5 (N.D.Tex.,2002) referring to *In Re Freeman*, 30 F.3d 1459, 1468 (Fed.Cir.1994) see also MPEP §2286. (Exhibit 7).

During the course of the '972 Patent litigation in the *Chaparral* case, the Patentees made a number of admissions under oath at deposition and at trial that have a direct bearing on the current reexamination and the scope of the patents at issue. Pursuant to MPEP §2217, Patentee admissions may be used in combination with Patents and printed publications to establish a substantial new question of Patentability.

Oracle-Huawei-NetApp Ex. 1024, pg. 2281

Admissions are not restricted to just a determination of a substantial new question of Patentability. Under section 305, reexamination proceeds "...according to the procedures established for initial examination." 35 U.S.C.A. § 305, see also *In re Portola Packaging Inc.*, 122 F.3d 1473, 1475 (C.A.Fed.,1997) see also 37 C.F.R. 1.104 (c)(3). "Facts, including admissions which have already been established in the record, have been authorized for use in reexamination proceedings. See 37 CFR 1.106(c) and M.P.E.P. § 2258." *Ex Parte the Successor in Interest of Robert S. McGaughey*, 1988 WL 252480, *4. (Exhibit 8). "In the initial examination of Patent applications, admissions by the applicant are considered for any purpose including evidence of obviousness under section 103." Id. "An admission is defined as an acknowledged, declared, conceded or recognized fact or truth. Thus, admissions are simply facts." Id at *5.

IV. THE SCOPE OF THE INVENTION AS ADMITTED BY AN INVENTOR

During trial and deposition testimony in the *Chaparral* case, one of the two inventors of the '972 and Related Patents stated that the only invention claimed was the movement of access controls from a network server into the router device. Every other limitation in the claims of the '972 Patent, including the router device itself, was admitted to be prior art. *See* trial transcript of inventor Geoffrey Hoese, Exhibit 9, pages 70 to 72. According to the inventor, the novel feature of the claims is that the storage router, rather than a network server, performs access control such that each workstation may have controlled access to a specific partition of the storage device which forms the virtual local storage for that workstation ('972 Patent, column 4, lines 22-25). All other aspects of the alleged invention as set forth in figure 2 of the '972 Patent and the corresponding written description of the '972 patent were acknowledged by the inventor Geoffrey Hoese, in his trial testimony in the *Chaparral* case, to be part of the prior art and not the invention.

Q. Figure – well, figure 2 is not your invention, right, sir?
A. **Figure 2 is not my invention.**
Q. And this description is in reference to figure 2, and this description mentions native low-level block protocols and mentions mapping, and you say figure 2 is not your invention?
A. That's correct.

Oracle-Huawei-NetApp Ex. 1024, pg. 2282

(Trial transcript of Hoese, page 81, starting at line 3, emphasis added)

* * *

See, *In re Nomiya*, 509 F.2d 566, 570-71, 571 n.5, 184 USPQ 607, 611, 611 n.4 (CCPA 1975) ("We see no reason why appellants' representations in their application should not be accepted at face value as admissions that Figs. 1 and 2 may be considered "prior art" for any purpose, including use as evidence of obviousness under § 103. [Citations omitted.] By filing an application containing Figs. 1 and 2, labeled prior art, *ipsissimis verbis*, and statements explanatory thereof, appellants have conceded what is to be considered as prior art in determining obviousness of their improvement.")

V. THE '972 PATENT IS INVALID AS IT IS ANTICIPATED BY THE MAXSTRAT GEN 5 PRODUCT

MaxStrat (previously known as Maximum Strategy) was a company that designed and manufactured RAID (redundant array of independent devices) controllers as well as entire storage systems, beginning in the early 1990s. In 1996, MaxStrat began shipping the GEN5 RAID controller, which was a router that performed the function of access controls and met each and every claim of the '972 Patent. (It should be noted that in the *Chaparral* case, the Court determined that the '972 Patent covered RAID controller devices, as they met the definition of "routers." Further, the devices accused by Crossroads in *Crossroads v. Dot Hill* are RAID controllers, like the GEN5.)

A chart is included in Exhibit 10 comparing elements described in the GEN5 System Guide and GUI User's Guide with each limitation in all claims of the '972 Patent. A copy of the *Gen5 S-SERIES XL System Guide Revision 1.01*, published June 11, 1996 ("System Guide"), is included as Exhibit 11, and a copy of the *Graphical User Interface for MAXSTRAT Gen5/Gen-S Servers User's Guide 1.1*, published January 6, 1997 ("GUI Guide"), is included as Exhibit 12. Both manuals were published before the alleged invention of the '972 Patent.

Oracle-Huawei-NetApp Ex. 1024, pg. 2283

The GUI Guide describes the operation of the Gen5 S-Series Storage Server, which is documented in the System Guide.

> "1.1.2 System Requirements
> The GUI will function on all models of the Gen5 Storage Servers, at Gen5 software revision 1.60 or higher, and all models of the Profile NFS File Server at ProOS revision 0.82 and higher, and all models of the S-Series at software revision 1.00 or higher." [GUI Guide, page 1]

The GUI Guide expressly references the System Guide, which is incorporated by reference:

> "1.1.3 Related Reference Material
> ...
> S-Series System Manual" [GUI Guide, page 2]

The GUI Guide and System Guide are a two-volume set that make a single publication. This printed publication describes each and every limitation of the Claims of the '972 Patent. The pertinency and manner of applying this printed publication to the '972 Patent is explained in the chart included in Exhibit 10, which compares elements of the Gen5 with each limitation in each of the claims of the '972 Patent.

The GEN5 provides a number of devices such as Cray computers on one side of the GEN5 with access to storage devices such as hard disk drives on the other side of the GEN5. An outline of this configuration is shown below.

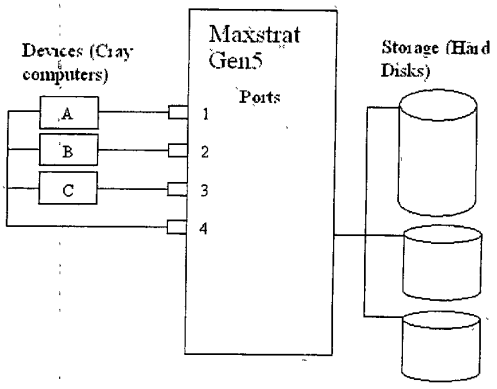

Oracle-Huawei-NetApp Ex. 1024, pg. 2284

As to the "access control" limitation of the '972 Patent, the Gen5 is able to assign a specific storage area to a specific device. The GEN5 includes the "ifp" command, which includes the "luns bitmask enable" field. This field is used to specify the enabling of LUNs on interface ports to provide access to "facilities" (storage units). [See Exhibit 10, Claim chart, pages 5 and 6; see Exhibit 11, Gen5 System Guide, pages 4-42 to 4-43]. For example, each device attached to a GEN5 can be assigned a subset of a disk drive as shown below.

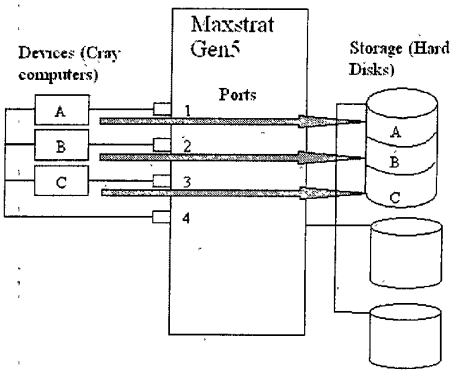

Alternatively, the GEN5 allows for a configuration where all the devices can access a global disk storage, as identified below.

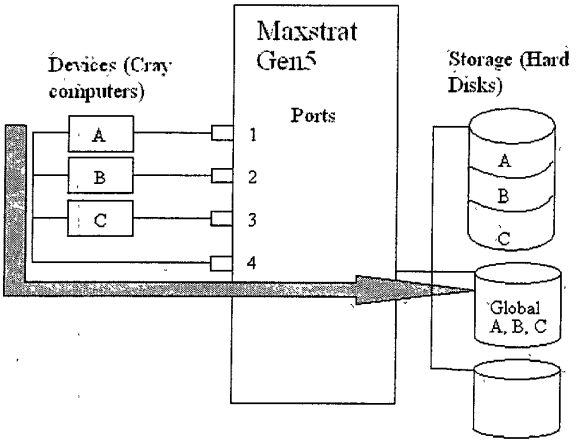

Oracle-Huawei-NetApp Ex. 1024, pg. 2285

Attorney Docket No. 2222.0010000

Finally, the GEN5 can assign a device to a particular drive, again as displayed below.

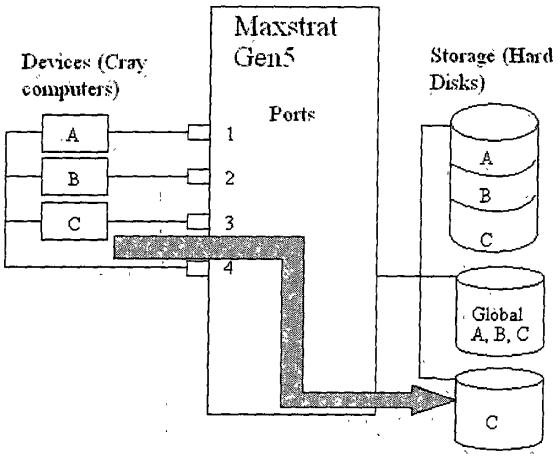

Notably, this last configuration of the GEN5 was quite common and not an unreasonable extension of the product. (See *Hillgrave Corp. v. Symantec Corp.*, 265 F.3d 1336, 1343 (Fed.Cir. 2001) for a discussion of the reasonable use of a product involved in an infringement analysis). Review of the GEN5 documentation attached herein indicates that such a configuration was available. (Exhibit 13).

While GEN5 connected to storage devices using only the SCSI transport medium, Gen5 could be configured to use combinations SCSI, Fibre Channel and/or HIPPI transport media to connect to hosts.

In sum, the GEN5 allows access to a global data storage device, subsets of a single storage device, and access to a single storage device. This allocation of storage is what the Court in *Chaparral* identified as access control. (Exhibit 6). The GEN5 meets every element of the alleged invention of the '972 Patent.

Oracle-Huawei-NetApp Ex. 1024, pg. 2287

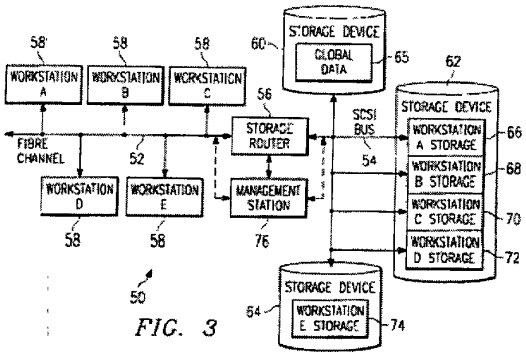

FIG. 3

In comparing the last configuration of the Gen5 (shown on the previous page) to an embodiment of the invention of the '972 Patent as shown in Fig. 3 of the '972 Patent specification above, it is clear that the GEN5 anticipates every element of the '972 Patent. The only difference between Fig. 3 and the last configuration of the GEN5 is that the workstations in Fig 3. are attached to a single Fibre Channel transport medium, while the workstations of the GEN5 are attached to separate Fibre Channel transport mediums.

However, it is important to note that Claim 1 of the '972 Patent does not require every Fibre Channel device to be connected to a single Fibre Channel transport medium. The chart below identifies an excerpt of Claim 1 that addresses this issue and a full detailed analysis appears in Appendix A. Further analysis in relation to the '972 Patent is presented in Appendices B and C.

Oracle-Huawei-NetApp Ex. 1024, pg. 2288

'972 Patent claim 1	
1. A storage router for providing virtual local storage on remote SCSI storage devices to Fibre Channel devices, comprising: ...	
... to maintain a configuration for SCSI storage devices connected to the SCSI bus transport medium that maps between Fibre Channel devices and SCSI storage devices and that implements access controls for storage space on the SCSI storage devices; and	This claim element does not specify that there is cooperation between the Fibre Channel devices and the Fibre Channel transport medium. Nowhere in the claim is such cooperation specified. Therefore, maintaining a configuration, mapping, and access control can be accomplished without any restriction that the Fibre Channel devices must be on a single Fibre Channel transport medium. According to this claim, the Fibre Channel devices are not required to be connected to anything. The GEN5 allows access control, mapping, and maintaining a configuration by configuring a port for each Fibre Channel device and renders the '972 Patent invalid.

To amplify the fact that there is no requirement in the '972 Patent that the Fibre Channel devices connect to a Fibre Channel medium, the cooperation of the limitations of Claim 1 are illustrated clearly in the figure below.

Storage Router as Recited in Claim 1 of '972 Patent

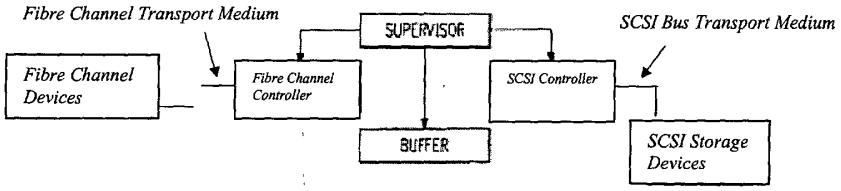

Without the limitation that a Fibre Channel Device must be connected to only a single Fibre Channel transport medium, the claim is broad enough to address any situation where there are multiple Fibre Channel devices. Thus, using a number of ports to connect individual Fibre Channel devices to GEN5 would be covered by claim 1. As a

Oracle-Huawei-NetApp Ex. 1024, pg. 2289

result, GEN5 completely anticipates the subject matter claimed in the '972 Patent and renders the '972 Patent invalid.

VI. THERE WERE OTHER CONTROLLERS ON THE MARKET PRIOR TO THE INVENTION OF THE '972 PATENT THAT PERFORMED ACCESS CONTROLS

In addition to the Maxstrat Gen5, there were other RAID controllers that performed access controls and were commercially available at the time of the alleged invention of the '972 Patent.

Storage Technologies, Inc. (known as "StorageTek") designed and manufactured the Iceberg RAID controller before 1997. Iceberg performed access control; Iceberg made selected hosts blind to selected storage based on the permission granted to those selected hosts. Iceberg connected a plurality of IBM mainframe host computers to partitions and subsets of multiple SCSI storage devices. As described in the '972 Patent, Iceberg contained a supervisor unit, which was coupled to a buffer, a host controller and a storage controller. The host and storage controllers included protocol units, FIFO buffers and DMA. Iceberg performed mapping to present a virtual Count-Key-Data disk interface to the hosts for the fixed-block allocation SCSI disk drives.

Similarly, CMD Technology, Inc. made the CRD-5500 SCSI RAID Controller before 1997. The CRD-5500 includes all the elements described in the '972 Patent, except for the addition of Fibre Channel to the host interface, which is an obvious addition. Features for access controls to partitions of disks and subsets of disks (called "redundancy groups") are explained in the *CRD-5500 SCSI RAID Controller User's Manual, Rev. 1.3*, published November 21, 1996, which is included as Exhibit 14.

> "The controller's Host LUN Mapping feature makes it possible to map RAID sets differently to each host. You make the same redundancy group show up on different LUNs to different hosts, or make a redundancy group visible to one host but not to another." (CRD-5500 User's Guide, page 1-1, Section 1.2).

Oracle-Huawei-NetApp Ex. 1024, pg. 2290

"4.3.3 Host LUN Mapping

This screen may be used to map LUNs on each host channel to a particular redundancy group. Or you may prevent a redundancy group from appearing on a host channel. Thus, for example, you may map redundancy group 1 to LUN 5 on host channel 0 and the same redundancy group to LUN 12 on host channel 1. Or you may make redundancy group 8 available on LUN 4 on host channel 0 and block access to it on host channel 1." (CRD-5500 User's Guide, page 4-5, Section 4.3.3).

Finally, Infortrend Technologies, Inc. made the IFT-3000 before 1997. The IFT-3000 is also a SCSI RAID controller, and includes all the elements described in the '972 Patent except for the addition of Fibre Channel to the host interface, which is an obvious addition. A chart is included in Exhibit 15 comparing elements described in the IFT-3000 Instruction Manual with each limitation in Claim 1 of the '972 Patent. A copy of the *IFT-3000 SCSI to SCSI Disk Array Controller Instruction Manual Revision 2.0*, published in 1995, is included as Exhibit 16.

VII. THE '972 PATENT IS INVALID AS IT IS ANTICIPATED BY U.S. PATENT NO. 6,073,209 TO BERGSTEN

The '972 Patent is also anticipated by U.S. Patent No. 6,073,209 (the '209 Patent) titled "Data storage controller providing multiple hosts with access to multiple storage subsystems," to Bergsten, filed March 31, 1997, which was prior art as of the '972 Patent's filing date. A copy of the '209 Patent is included in Exhibit 1, and the claim chart comparing elements of this Patent to limitations in the claims of the '972 Patent is included in Exhibit 22. The '209 Patent describes a form of access controls using low level, block protocols. For example, the '209 Patent states in the ABSTRACT section:

"Each storage controller may be coupled to at least one host processing system and to at least one other storage controller to control access of the host processing systems to the mass storage devices."

The '209 Further states, in column 15, lines 39 to 47:

"A storage controller of the present invention further allows data blocks to be write protected, so that a block cannot be modified from any

Oracle-Huawei-NetApp Ex. 1024, pg. 2291

host computer. Write protection may be desirable for purposes such as virus protection or implementation of security firewalls. Write protection can be achieved by configuring the storage controller appropriately at set-up time or by inputting a write protect command to the storage controller from a host computer."

The '209 Patent thus describes how to control access of hosts to storage devices by allowing data blocks to be write protected from host computers. Since data blocks can be write protected, the '209 Patent describes a storage controller that limits a computer's access to subsets of storage devices or sections of a single storage devices, which is what the Court in *Chaparral* identified as access control (Exhibit 6). In addition, this explicit reference to security-oriented data protection provides strong motivation to a person of ordinary skill in the art to combine the '209 Patent and other prior art storage routers with enhanced security features.

The '209 Patent also includes all the remaining elements of the claims of the '972 Patent: a RAM buffer (column 6, line 26); a Fibre Channel controller (column 4, line 28); a SCSI controller (column 4, line 21); a CPU supervisor unit (column 6, line 26); and mapping (column 3, line 18). See Figure 3 from the '209 Patent, included below, depicting a STORAGE CONTROLLER with CPU, RAM, HOST DEVICE I/F (interface) with arrows leading TO/FROM HOST (Fibre Channel transport medium), and STORAGE DEVICE I/F with arrows leading TO/FROM LOCAL EXTERNAL STORAGE DEVICES (SCSI bus transport medium).

Oracle-Huawei-NetApp Ex. 1024, pg. 2292

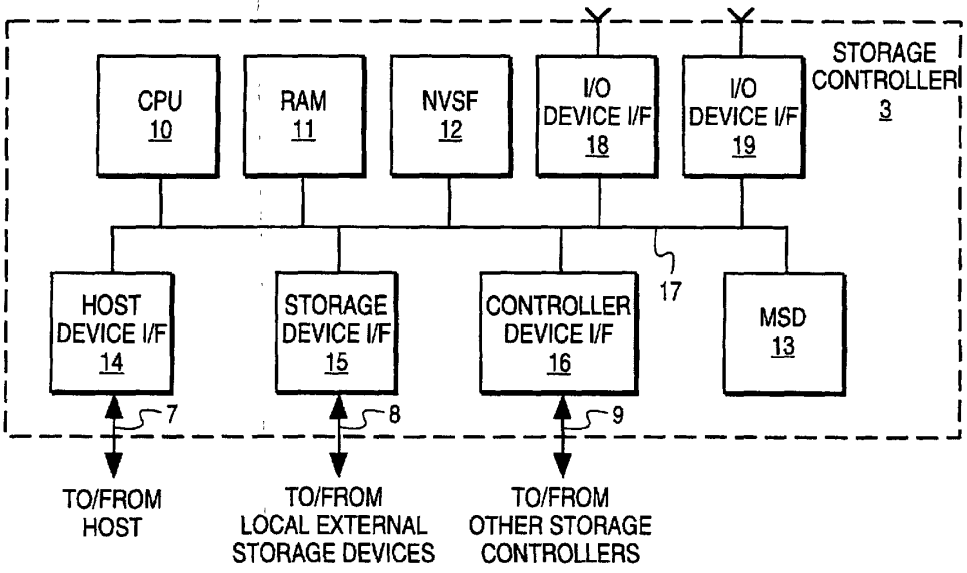

FIG. 3

Thus, the '209 Patent anticipates the '972 Patent, or in the alternative, provides strong intrinsic motivation to combine a Fibre Channel to SCSI storage router with access control.

VIII. THE ALLEGED INVENTION OF THE '972 WAS OBVIOUS IN LIGHT OF THE PRIOR ART AND NUMEROUS MOTIVATIONS TO COMBINE

The Obviousness Standard.

"... [T]he standard under 35 U.S.C. § 103 [for obviousness] is what would have been obvious to one of ordinary skill in the art, and the level of the skilled artisan should not be underestimated. See *In re Sovish*, 769 F.2d 738, 743, 226 USPQ 771, 774 (Fed. Cir. 1985)." *Ex Parte Richard A. Flasck*, 2000 WL 33520310, *3. (Exhibit 17). Factors that may be considered in determining level of ordinary skill in the art include: (1) the education level of the inventor; (2) type of problems encountered in the art; (3) prior art solutions to those problems; (4) rapidity with which innovations are made; (5) sophistication of the technology; and (6) education level of active workers in the field.

Oracle-Huawei-NetApp Ex. 1024, pg. 2293

Environmental Designs v. Union Oil Co. of Cal., 713 F.2d 693, 696-697 (Fed.Cir.1983), cert. denied, 464 U.S. 1043, 104 S.Ct. 709, 79 L.Ed.2d 173 (1984) see also *Orthopedic Equipment Co., Inc. v. All Orthopedic Appliances, Inc.*, 707 F.2d 1376 at 1381-1382 (Fed.Cir.1983). The level of one of ordinary skill is evaluated at the time the invention was made. Id at 1382.

The Field of Endeavor.

The first question in an obviousness argument is whether the references are in the field of the inventor's endeavor. *In re Deminski*, 796 F.2d 436, 230 U.S.P.Q. 313, (Fed.Cir., Jul 08, 1986). The field of art that encompasses the '972 Patent, as well as the Related Patents, is that of computer science and electronics. Some of the hardware identified in the '972 Patent includes routers, networks, bridges, servers, controllers, storage devices, storage disks, microprocessors, buffers, storage controllers, and workstations. The prior art would encompass, at least, the fields of computer science and electronics as it relates to the hardware discussed above.

It is common knowledge that the computer science and electronics field is one that has experienced, and continues to experience, rapid development and complexity in hardware and software. As a result, a person skilled in the art would be someone with a degree in Computer Science, Electrical Engineering or an equivalent, with perhaps seven or more years of professional experience, and with knowledge of at least computer hardware, systems, electronics, and software in such an area of rapid innovation.

The Motivation to Combine

Identification in the prior art of each individual part claimed is insufficient to defeat patentability of the whole claimed invention. Rather, to establish obviousness based on a combination of the elements disclosed in the prior art, there must be some motivation, suggestion, or teaching of the desirability of making the specific combination

Oracle-Huawei-NetApp Ex. 1024, pg. 2294

that was made by the applicant. *In re Kotzab*, 217 F.3d 1365, 1369-1370 (C.A.Fed., 2000).

Obviousness and Motivation to Combine in Light of the 1984 Byte Magazine Article

As has already been discussed, one of the two inventors of the '972 Patent admitted under oath that the only limitation of the '972 Patent that is not taught by prior art is the movement of access controls from the network server to the router. This petition has identified no less than four RAID controllers – or "routers" – (five if one includes the DEC HSZ70 RAID controller) that performed access controls. However, even if one were to ignore those prior art RAID controllers, the movement of access controls from the network server into the router would have been obvious in light of an article published in Byte Magazine in 1984.

Further, the GEN5 prior art RAID controller discussed above connected to Fibre Channel hosts on one end and SCSI storage devices on the other, just like the device described in the '972 patent. However, the remainder of the RAID controllers connected to hosts and storage devices using other protocols. The decision to connect the router described in the '972 Patent to hosts through the Fibre Channel transport medium, and to connect the router to storage devices through the SCSI transport medium would have been obvious in light of the 1984 Byte Magazine article.

"Local-Area Networks for the IBM PC" was written by J. Scott Haugdahl ("*Haugdahl*") and published in the December 1984 edition of Byte Magazine. Byte Magazine is a widely-read computer magazine and publicly available. (Exhibit 18). The *Haugdahl* article teaches the following:

- A need to preserve the benefits of a stand-alone personal computer system while obtaining the benefits from networking.

> "Thus, with LANs you want to preserve the benefits of stand-alone microcomputers, namely, use of your favorite software and peripherals and having a machine all to yourself, as well as adding new benefits from networking." (p. 147, col. 2).

Oracle-Huawei-NetApp Ex. 1024, pg. 2295

Network benefits known at the time of the invention included access controls and mapping. This reference, however, is not limited to just networks, but provides motivation to develop systems other than networks that have some desirable network characteristics.

- A trend in the industry toward using open systems that follow published specifications, such as Fibre Channel and SCSI protocols.

> "Most systems that follow de facto standards, such as Ethernet or Arcnet, and those that follow 'committee' standards, such as IEEE-802 or those of the National Bureau of Standards, tend to be open systems." (p. 147, col. 3).

Fibre Channel and SCSI were available during the time of the alleged '972 invention.

- Access controls that enabled only a particular user to access data.

> "Because all these servers support multiple users, you're going to need some sort of password protection scheme, as well as some means of protecting the data of one user from another." (p.151).

This clearly teaches restricting access to stored data. It is not limited to any particular implementation and could very well be the impetus to use such schemes as LUN masking.

- Servers were known to be a potential bottleneck problem.

> "However, the server is a potential bottleneck, particularly if you don't go with a high-performance processor." (p. 154, col. 3).

Bottlenecks were a well known problem and a person skilled in the art would be sensitive to alternatives, such as having the router perform access controls, as opposed to the server.

- Implementing access controls at a low level.

Oracle-Huawei-NetApp Ex. 1024, pg. 2296

"Disk service users' requests for disk I/O (input/output) at a low level. ... Thus the server is really a disk 'volume' server, and file I/O is handled directly by the operating system in the PC." (p. 154, col. 3).

Here is the connection between native low-level protocols as used by a personal computer and the difference as it existed in 1984 for file servers.

- Access control and virtual local storage.

"EtherShare manages virtual disks at the volume level. Passwords are required to 'log on' and optional passwords can be placed on volume. Volumes can be made private for individual use only, public for use by several users in a read-only fashion, and shared for multiple read/write access." (p. 156, col.2).

"[Regarding Corvus] It was simply a device that allowed you to share a hard disk by partitions." (p. 163, col. 3). "[Regarding Nestar] [I]n fact, if you had two PLAN 4000 systems with a gateway server, you could establish virtual connections with disks on other network file servers and use them as if they were local." (p. 166, col. 3).

Virtual access to disks, security-oriented access control, private and shared hard disks, and use of remote storage devices having the appearance and characteristics of local storage were well documented and available to consumers at least as early as 1984.

The article further highlights numerous disadvantages to using file servers for the performance of certain functions and directly indicates how handling a file with a personal computer's I/O is more direct. The type of I/O endemic to the personal computer is a native low-level block protocol. A person skilled in the art would realize that a remote storage device, like that provided by a file server, would be more desirable if it utilized the I/O handling like that of a personal computer. Further, a person skilled in the art would realize that other network-like options would be desirable. Those options would include access control.

Obviousness and Motivation to Combine in Light of the 1995 *Bursky* Article

Similar to the *Haugdahl* article, Dave Bursky wrote an article that appeared in the February 6, 1995 edition of "Electrical Design" entitled "New Serial I/O Speed Storage

Oracle-Huawei-NetApp Ex. 1024, pg. 2297

Subsystems" (Exhibit 19) that also teaches the desirability of connecting workstations to a storage controller or router via the Fibre Channel protocol.

- The Bursky article teaches that Fibre Channel helps relieve problems with remote, high-speed devices, such as noise, signal integrity, speed, and bulky cables.

> "Using a serial interface also helps relieve one of the largest headaches when it comes to connecting many high-speed devices together - noise and signal integrity. ... Therefore, to achieve top performance, long parallel cables must be eliminated to control impedance, minimize crosstalk, and allow data transfers to run at maximum speeds. ... The FC drives eliminate the need for large connectors and bulky SCSI cable." (*Bursky*, p. 81, col. 2 to p. 82, col. 1.)

- The Bursky article teaches that Fibre Channel chips were commercially available.

> "Aside from Seagate's disk drives, only a handful of FC storage interfaces are immediately available and just a few companies offer any silicon. The smattering of chips on the market include several choices from Applied Micro Circuits, Hewlett-Packard (G-Logic chip set), LSI Logic (megacells), Microelectronics Technology Center, NCR, Rockwell International, TriQuint Semiconductor, and Vitesse Semiconductor." (*Bursky*, p. 88, col. 3.)

The Bursky article expounds the virtues of Fibre Channel and lists several manufacturers from which Fibre Channel controllers for storage interfaces can be acquired.

<u>One of the Inventors Admitted To Obviousness and a Motivation to Combine.</u>

In fact, one of the inventors of the '972 Patent testified under oath in the *Chaparral* litigation that a person skilled in the art would have known at the time of the filing of the '972 Patent that various known and readily identifiable problems would be solved by: 1) connecting the prior art router described in the '972 Patent to hosts by way of the Fibre Channel transport medium, and; 2) performing the access control function in the router, as opposed to the network server.

Oracle-Huawei-NetApp Ex. 1024, pg. 2298

"...there's a general need in computing to increase the addressability of devices, of storage devices, for example. There's a general need to increase the speed of communication to those devices. There's a general need to increase the distance over which you can communicate to devices. And most fundamentally, I'd say that was the set of capabilities that we were interested in providing solutions for; and in doing so, you know the, for example, fibre channels, in general technology addresses a number of those issues over and beyond the benefits of previous technologies. And to, that's you know, that's a nice, general set of problems that were addressed."

(Deposition of Hoese, page 125-126.) (Exhibit 20).

"...the main problem is the network server is expensive to maintain, it has various bottlenecks in transferring data between these things, has to go through a lot of effort to translate the data requests, get the data from one side to the other."

(Trial transcript of Hoese, page 59-60.) (See above).

There is no indication that the general needs spoken of by Hoese constituted a unique problem known only by the Patentees, or that the Patentees forever solved these general needs with their alleged invention, or that there was a long felt need to solve these problem that now ceases to exist due to the Patentees alleged invention. Finally, it is clear that the Patentees did not discover the source of any of these general needs or their solutions; the needs and solutions were known to the industry at the time.

The Patentees sworn testimony shows that a person skilled in the art at the time of the alleged invention embodied in the '972 Patent would have been acutely aware of a variety of needs in the field. These needs provide the motivation for a person skilled in the art to seek a solution.

IX. ADDITIONAL PRIOR ART THAT ADDRESSES EACH OF THE GENERAL NEEDS AS IDENTIFIED BY THE SWORN TESTIMONY OF THE INVENTORS

The prior art RAID controllers discussed herein, the magazine articles, and the testimony of the inventors of the '972 are reason enough to find that the '972 Patent should have never issued. However, in the interests of bringing all prior art to the

Oracle-Huawei-NetApp Ex. 1024, pg. 2299

attention of the examiner and the Patent Office, we supply, below, additional prior art that addresses each of the needs as identified by the inventors in sworn testimony.

Increased speed

Increasing the speed at which data was transferred from a host to storage and back again was one problem identified by testimony of the inventors, supra, and was commonly known throughout the industry. As already discussed above, it was well known in the prior art at the time of the '972 Patent invention that the Fibre Channel protocol was extremely fast and operated above 1 gigabit per second in transmission speed. See Berman, U.S. Patent No. 6,185,203, see also U.S. Patent No. 5,638,518 to Malladi, filed October 24, 1994 and issued June 10, 1997 starting at Column 2, Line 54. Use of Fibre Channel was available and would have been an obvious selection to one skilled in the art. (Exhibit 1).

Reduction of data translation requests

Concerning the reduction of translation of data requests, it was also well known in the prior art that Fibre Channel and SCSI shared a common protocol. In particular, the highest level in the Fibre Channel standards set, FC-4, defines the mapping between the lower levels of the Fibre Channel and SCSI command sets. U.S. Patent No. 6,185,203 to Berman at Column 6, starting at line 18, identified as prior art as of the filing date of February 18, 1997. This well known prior art commonality reduces any need for data translation between Fibre Channel and SCSI protocols. "Multiple protocols such as SCSI (Small Computer Serial Interface), IP (Internet Protocol), HIPPI, ATM (Asynchronous Transfer Mode) among others can concurrently utilize the same media when mapped over Fibre Channel." Id. Abstract. "One of the reasons that Fibre Channel is so popular is that one of the payloads and upper level protocols which can be mapped, is the protocol for SCSI." U.S. Patent No. 5,959,994 to Boggs, et al, filed August 19, 1996, issued September 28, 1999, statement appearing as prior art starting at Col. 3 at Line 11. (Exhibit 1).

Oracle-Huawei-NetApp Ex. 1024, pg. 2300

The connection between Fibre Channel and SCSI allows for the transmission of data using Fibre Channel low-level block protocols. U.S. Patent No. 5,638,518 to Malladi, filed October 24, 1994 and issued June 10, 1997 starting at Column 2, Line 54. A person skilled in the art at the time of the alleged invention of the '972 Patent would have found it obvious to use a combination of Fibre Channel and SCSI protocols to connect a router to hosts and storage devices, in order to reduce data translation requests. (Exhibit 1).

The issue of distance

As to the need to allow for greater distances between hosts and storage devices, it was well known in the prior art that Fibre Channel offered the availability of a greater distance. U.S. Patent No. 5,519,695 to Purhoit, et al, starting at Column 2, Line 12 identified as prior art as of the filing date of October 27, 1994. (Exhibit 1).

Addressability

The '972 Patent identifies addressability in three different instances. First, as a map between the Fibre Channel controller and the SCSI controller. Second, as it relates to Fibre Channel devices and SCSI devices. Third, as access controls.

Mapping between the Fibre Channel controller and the SCSI controller

As to the first instance, mapping between a Fibre Channel controller and a SCSI controller was well-known in the art as evidenced by U.S. Patent No. 5,748,924 to Llorens, et al, filed October 17, 1995, issued May 5, 1998. Also, as identified above, the Patentees admitted that mapping was prior art.

While the Llorens Patent was reviewed during the initial examination of the '035, '972, and '036 Patents, presenting it again in this context is permissible. "The existence

Oracle-Huawei-NetApp Ex. 1024, pg. 2301

of a substantial new question of Patentability is not precluded by the fact that a Patent or printed publication was previously cited by or to the Office or considered by the Office." 35 U.S.C. §303(a), which overruled a portion of the case of In re Portola on the issue of using art relied upon in the initial examination. See 2002 Amendments. Pub.L. 107-273, § 13105(a), inserted "The existence of a substantial new question of Patentability is not precluded by the fact that a Patent or printed publication was previously cited by or to the Office or considered by the Office." (Exhibit 1).

Addressability of Fibre Channel devices and SCSI devices

It was well-known in the prior art how to identify the existence of Fibre Channel devices and SCSI devices connected to a computer or on a network. See U.S. Patent No. 5,317,693 to Cuenod, et al., titled "Computer peripheral device network with peripheral address resetting capabilities" filed April 4, 1991, issued May 31, 1994. U.S. Patent No. 5,664,107 to Chatwani, et al, titled "Method for providing for automatic topology discovery in an ATM network or the like" filed June 7, 1995, issued September 2, 1997. U.S. Patent No. 4,827,411 to Arrowood, et al, titled "Method of maintaining a topology database" filed June 15, 1987, issued May 2, 1989. Again, as identified above, the Patentees admitted that Fibre-to-SCSI storage routers were prior art and these types of routers, as shown in figure 2 of the '972 Patent, had a number of workstations and storage units attached to the Fibre and SCSI channels. Such a situation could not have existed unless the devices on the channels were addressable. (Exhibit 1).

Access Controls

The *Haugdahl* article addressed access control as far back as 1984. Concerning access control, Fibre Channel was known to be, "a channel-network hybrid, containing enough network features to provide the needed connectivity, distance and protocol multiplexing, and enough channel features to retain simplicity, repeatable performance and reliable delivery." Arrowood Id. The Patentees admitted that one of the network's functions was the performance of access control.

Oracle-Huawei-NetApp Ex. 1024, pg. 2302

Q. Okay. Can you explain your invention of the 972 Patent invention in your own words, sir?

A. The invention provides a method for connecting computers to storage devices, providing that connectivity, the ability to map storage between different devices, providing virtual local storage and security management capabilities for those devices.

Q. Well, what was the state-of-the-art at the time that you came up with your invention? How were people doing that sort of thing?

A. Primarily through the use of network servers.

(Trial transcript of Hoese. Page 58, starting at line 16.) See above.

Q. So how did your invention improve on this basic situation?

A. Well, using the invention in this role, you basically have the computers on the one side speaking their native low-level block protocols that they communicate with to storage devices, routing those through a storage router, and connecting those devices to the actual storage without having to do the translation from the – through the network protocols or translation through the file system.

(Trial transcript of Hoese. Page 60, starting at line 19.) See above.

Q. Mr. Russell, you said you solved problems that existed in the world just a moment ago. Could you elaborate on that, what you meant by that?

A. Sure. That was the initial problem that we saw to be solved by the invention which is the way that storage was hooked up remotely. So it was done through network file servers across the network, and that's how you accessed storage.

(Trial transcript of Russell. Page 115, starting at line 5.) (Exhibit 21).

By admission of both Patentees, a prior art network file server had the ability to perform all the functions identified by the invention, including restricting the addressability of the storage units, i.e. access control. What the networks did not do was operate using native low-level block protocols.

However, as shown above, it was well known in the art that transport mediums such as Fibre Channel and SCSI contained network capabilities and could work at low-level block protocols The ability to identify, address, and partition storage drives for

Oracle-Huawei-NetApp Ex. 1024, pg. 2303

access by a host computer was well-known in the art at the time of the filing of the '972 Patent. As already discussed, this was evidenced by prior art RAID controllers such as the GEN5, CRD 5500, Iceberg and Infortrend 3000. However, it was also evidenced by U.S. Patent No. 5,634,111 to Oeda, et al, filed March 1993, issued May 27, 1997, reference in the Abstract. See also U.S. Pat. No. 4,961,224 to Yung titled "Controlling access to network resources," filed March 6, 1989, issued October 2, 1990. Also, U.S. Patent No. 5,659,756 titled, "Method and system for providing access to logical partition information on a per resource basis," to Hefferon, et al, filed March 31, 1995 discloses a system that partitions a subset of main storage. (Exhibit 1).

Another form of access control is identified in U.S. Patent No. 6,073,218 titled, "Methods and apparatus for coordinating shared multiple raid controller access to common storage devices," to DeKoning, et al, filed December 26, 1996, that was prior art as of the Patent filing date, which states in the "BACKGROUND OF THE INVENTION" section that

> "There are five 'levels' of standard geometries defined in the Patterson publication. The simplest array, a RAID level 1 system, comprises one or more disks for storing data and an equal number of additional "mirror" disks for storing copies of the information written to the data disks. The remaining RAID levels, identified as RAID level 2, 3, 4 and 5 systems, segment the data into portions for storage across several data disks. One or more additional disks are utilized to store error check or parity information."

Thus, storage across disks addresses the concept of assigning subsets of the disk so as to retain information from a specific workstation. (Exhibit 1).

The prior art identifies aspects of a distributed security system in which access to system resources is controlled by access control lists associated with each system resource. U.S. Patent No. 5,315,657 to Abadi, et al., issued: May 24, 1994, filed September 28, 1990. Access control lists are used to define the extent to which different users will be allowed access to different resources on a server depending on the level of access control implemented on a given server, access control lists for a given disk defines the access restrictions for all the resources or files stored on that disk. U.S. Pat. No.

Oracle-Huawei-NetApp Ex. 1024, pg. 2304

5,889,952 to Hunnicutt, et al, issued March 30, 1999, filed: August 14, 1996 under the "STATEMENT OF THE PROBLEM" as part of prior art as of the filing date of August 14, 1996. Each host processor has exclusive access to its own set of storage devices and it cannot access the storage device of another host. U.S. Pat. No. 5,860,137 to Raz, et al, issued January 12, 1999, filed: July 21, 1995 under the "BACKGROUND OF THE INVENTION" As part of prior art as of the filing date of July 21, 1995. These groups of files form virtual disks, sometimes referred to as mini-disks, which for purposes of this description are identified by a number. A list of authorized users must exist for each mini-disk. U.S. Pat. No. 5,469,576 to Dauerer, et al, issued November 21, 1995, filed March 22, 1993. (Exhibit 1).

Given the Patentees sworn admission that a Fibre to SCSI storage router was well known in the art, it would have been obvious to a person skilled in the art to start with a router and implement changes to address the need for access controls within the router. This, in turn, would have led to the design of a device that incorporated all the limitations as found in the '972 Patent.

X. A PERSON OF ORDINARY SKILL IN THE ART AT THE TIME OF THE ALLEGED INVENTION WOULD BE MOTIVATED TO ADD ACCESS CONTROLS TO EXISTING STORAGE ROUTERS

A Person of Ordinary Skill in the Art at the Time of the Alleged Invention

The '972 Patent identifies the invention as a bridge device. '972 Patent Column 5 starting at Line 34. At the time the '972 Patent was filed, a person skilled in the art of the computer field would have knowledge of networks, server, routers, bridges, and brouters. Furthermore, such a person would be familiar with connecting workstations and storage devices with the items listed above. It is thus important to identify what encompasses a bridge and other related devices at the time of the filing of the '972 application.

Oracle-Huawei-NetApp Ex. 1024, pg. 2305

"In general, routers are used to interconnect different configurations of LANs (Ethernet to token ring, for example), over arbitrary distances, while bridges are used to interconnect locally like configurations of LANs (token ring to token ring, for example)." U.S. Patent No. 5,426,637 to Derby, et al, filed December 14, 1992, issued June 20, 1995, (Emphasis added). (Exhibit 1).

> "A router is an internetworking device that chooses between multiple paths when sending data, particularly when the paths available span a multitude of types of local area and wide area interfaces. Routers are best used for (1) selecting the most efficient path between any two locations; (2) automatically re-routing around failures; (3) solving broadcast and security problems; and (4) establishing and administering organizational domains. One class of router, often called bridge/routers or Brouters, also implements switching functionality, such as transparent bridging and the like."

U.S. Patent No. 5,802,278 to Isfeld, et al, identified as prior art as of the date of filing the application, starting at Column 1 at Line 23, filed January 23, 1996, issued September 1, 1998, (Emphasis added). (Exhibit 1).

A brouter (bridge/router) is a device that connects two or more LANs. A brouter allows stations on one LAN to connect to stations on different LANs. U.S. Patent No. 5,781,715 to Sheu, identified in "Prior Art" as of the filing date starting at Column 1, Line 26, filed October 13, 1992, issued July 14, 1998, emphasis added. (Exhibit 1).

> "A previously known local area network (LAN) is used to interconnect multiple personal computers or work stations, called 'clients,' and a network server. The network server comprises a personal computer and a program which provides a variety of services to the clients. For example, the server manages a local disk (DASD) and permits selected (or all) clients on the LAN to access the disk. Also, the server may provide access by LAN clients to a local printer that the server manages. To access the local disk, the client must first establish a session or 'log-on' to the server with a valid account and password and request a connection to the local disk. In response, the server validates the account and password, and grants the connection if available. Then, the client requests a remote file operation (e.g. open, read, write, close) and furnishes associated parameters. In response, the server may copy (depending on the operation) the file from the local disk into RAM, and performs the operation requested by the client. If the file is updated,

Oracle-Huawei-NetApp Ex. 1024, pg. 2306

the server will copy the updated version back to the local disk, overwriting the previous version."

U.S. Patent No. 5,642,515 to Jones, et al, titled "Network server for local and remote resources," filed April 17, 1992, issued June 24, 1997, in the background section identifying prior art, starting at Column 1 at Line 11, emphasis added. (Emphasis added). (Exhibit 1).

From the references above, it is clear that a person skilled in the art at the time of the filing of the '972 Patent application would understand the principles and applications of: 1) connecting a multiplicity of computing devices together, or to a system; 2) connecting a variety of peripherals to a system; 3) interfacing between like and different mediums; 4) controlling the access to storage units; 5) techniques for making a storage device transparent to a workstation (virtual local storage); and 6) a thorough understanding of similarities and differences in the various protocols in the computer field.

Motivation to add Access Controls to Existing Storage Routers

The central question in combining a variety of elements to arrive at the invention in a Patent is, "what would motivate a person to combine the elements?" In the present case, the Patentees have provided the answer to this question. Through sworn testimony, the Patentees identified a number of general problems in the field. The nature of the problem can lead inventors to look to references relating to possible solutions to that problem. In re Rinehart, 531 F.2d 1048, 1054, 189 USPQ 143, 149 (CCPA 1976).

As discussed above, inventor Hoese testified at trial that a storage router having every limitation of the alleged invention of the '972 Patent, except for access control, was prior art as identified in Fig. 2 of the '972 Patent and the related written description. Also, inventor Hoese stated that the alleged invention of the '972 Patent was just adding access control to a storage router. The Iceberg, GEN5, CRD-5500, and IFT 3000 prior art RAID controllers were all "routers" (as defined by the Court in the *Chaparral* case)

Oracle-Huawei-NetApp Ex. 1024, pg. 2307

that performed access controls. The designers of each of those controllers understood clearly the benefits of having those RAID controllers perform access controls, as opposed to a network server. The article written by *Haugdahl*, above, identifies that making volumes private by using passwords was a desirable feature for a network type system. Further, inventor Hoese identified that addressibility was a well-known issue in the field. Further, the article written by *Haugdahl,* and the patents to Oeda, Yeung, Hefferon, DeKonig, Abadi, Hunnicutt, Raz, and Dauerer all discuss not only the existence of well-known techniques for restricting access to storage devices in systems involving multiple hosts and multiple storage devices, but the need to do so.

Given the prior art storage router in Fig. 2 of the '972 Patent, the prior art RAID controllers discussed herein, the teaching from *Haugdahl* that it was desirable to include access control in systems like the storage router in Fig. 2, the Patentees testimony that addressibilty was an issue at the time of the alleged invention embodied in the '972 Patent, the numerous prior art patent references to access control, and the knowledge of those in the art regarding the use of access controls in storage systems, it would have been obvious to one skilled in the art at the time of the alleged invention of the '972 Patent to merely add access control to a prior art storage router and arrive at the '972 Patent.

XI. VALIDITY ANALYSIS: EXHIBITS CITING PRIOR ART AND EXPLAINING THE PERTINENCY AND MANNER OF APPLYING THE CITED PRIOR ART

Due to the large quantity of prior art cited in this request for reexamination, we include appendices and exhibits to explain the pertinency and manner of applying the cited prior art in tabular form rather than to embed hundreds of pages of analysis within this request. Although the analysis in the appendices and exhibits refer directly only to a selected subset of the claims of the '972 Patent, all arguments for invalidity apply equally to the remaining claims of the '972 Patent.

Oracle-Huawei-NetApp Ex. 1024, pg. 2308

Appendix A includes an analysis of the meaning of terms used in Claim 1 of the '972 Patent, based upon the *Chaparral Markman* order, the patentee's admissions, and the prior art.

Appendix B includes a matrix summarizing and identifying the elements of Claim 1 of the '972 Patent that are found in each of the cited prior art U.S. Patents and printed publications.

Appendix C includes a listing of possible prior art combinations in support of an obviousness rejection claims of the '972 Patent under 35 U.S.C. §103.

Exhibit 22 includes charts for each of the U.S. Patents and printed publications identified in Appendix B, indicating the relevant portions of the prior art that pertain to elements of the '972 Patent claims.

Below, please find the detailed analysis of each of the fourteen (14) claims of the '972 Patent and summary of alternative prior art references and combinations that render each claim invalid.

Claim 1

Claim 1 states:

> 1. A storage router for providing virtual local storage on remote SCSI storage devices to Fibre Channel devices, comprising:
>
> a buffer providing memory work space for the storage router;
>
> a Fibre Channel controller operable to connect to and interface with a Fibre Channel transport medium;
>
> a SCSI controller operable to connect to and interface with a SCSI bus transport medium; and
>
> a supervisor unit coupled to the Fibre Channel controller, the SCSI controller and the buffer, the supervisor unit operable:
>
> to maintain a configuration for SCSI storage devices connected to the SCSI bus transport medium that maps between Fibre Channel devices and SCSI storage devices and that implements access controls for storage space on the SCSI storage devices; and
>
> to process data in the buffer to interface between the Fibre Channel controller and the SCSI controller to allow access from Fibre Channel initiator devices to SCSI storage devices using native low level, block protocol in accordance with the configuration.

Oracle-Huawei-NetApp Ex. 1024, pg. 2309

Claim 1 is Invalid Based on RAID Controllers in the Prior Art that Already Have Access Controls

As discussed above, the patentees admitted that Fig. 2 was prior art, and thus, that the idea of a "storage router" mapping between Fibre Channel workstations and SCSI disk drives was already known. Such a storage router is also clearly described in the manuals for the Maxstrat Gen5, [See Exhibit 10, Claim chart, and Exhibits 11 and 12, Gen5 manuals], CRD-5500 and the IFT-3000.

The patentees have admitted that the only component of the alleged invention of the '972 Patent that they believe to be innovative is the performance of "access control" using "low level, block protocols" in the router device.

However, as discussed above and demonstrated in Exhibits 10 and 11, the Maxstrat Gen5 router device implements access controls using low level, block protocols. As the Gen5 manuals show, access control was configured for the Gen5 by using the "ifp" command which includes the "luns bitmask enable" field. This field is used to specify the enabling of LUNs on interface ports to provide access to "facilities" (storage units). [See Exhibit 10, Claim chart, pages 5 and 6; see Exhibit 11, Gen5 System Guide, pages 4-42 to 4-43]. The same is true for the CRD-5500, IFT-3000 and Iceberg RAID controller/router devices.

The Court in the *Chaparral* case defined "implements access controls for storage space on the SCSI storage devices" as "provides controls which limit a computer's access to a specific subset of storage devices or sections of a single storage device." (Exhibit 6, starting on page 3; Exhibit 6, page 15). The Gen5 did exactly that - a simple and reasonable configuration of the Gen5 would result in some computers having access to specific RAID sets (which could be a subset of storage devices or sections of a single storage device), while other computers would not have access to those specific storage units.

Oracle-Huawei-NetApp Ex. 1024, pg. 2310

The CRD-5500 had a similar access control called "Host LUN Mapping." The CRD-5500 Host LUN Mapping feature made it possible to map RAID sets differently to each host. (Exhibit 14, CRD-5500 User's Guide, pages 1-1 and 4-5). The IFT-3000 also had a similar feature for mapping LUNs to logical drives (Exhibit 15 Claim chart). The only element of the '972 Patent missing from the CRD-5500 or IFT-3000 is the use of the Fibre Channel transport medium to communicate with hosts, which is admitted by the patentees to be part of the prior art described in Figure 2.

Thus, the Maxstrat Gen5 anticipates Claim 1 under 35 U.S.C. §102, and the CRD-5500 and IFT-3000, in light of the admitted prior art of Figure 2, render Claim 1 obvious under 35 U.S.C. §103.

Claim 1 is Also Invalid Based on Adding Access Controls to U.S. Patents in the Prior Art

The RAID controllers discussed above anticipate and render the '972 Patent obvious because they include elements for "access control," as that term is used in the '972 Patent. The alleged invention of the '972 Patent can also be arrived at by starting with prior art U.S. Patents for storage routers and adding access controls. A listing of such prior art appears in Exhibits 1 and 22 and in Appendices B and C.

For example, U.S. Patent No. 5,748,924 (the '924 Patent) to Llorens, et al, filed October 17, 1995, issued May 5, 1998 is pertinent to discuss here, and a good reference to use for defining one such physical structure. As discussed above, 35 U.S.C. §303(a) authorizes the Patent Office to consider the Llorens prior art in a reexamination, even though this U.S. Patent was cited during the initial examination of the '972 Patent. The structure of Claim 1 in the '972 Patent is virtually identical to Fig. 1 of the '924 Patent shown below. (Exhibit 1).

'924 Patent to Llorens, Fig. 1

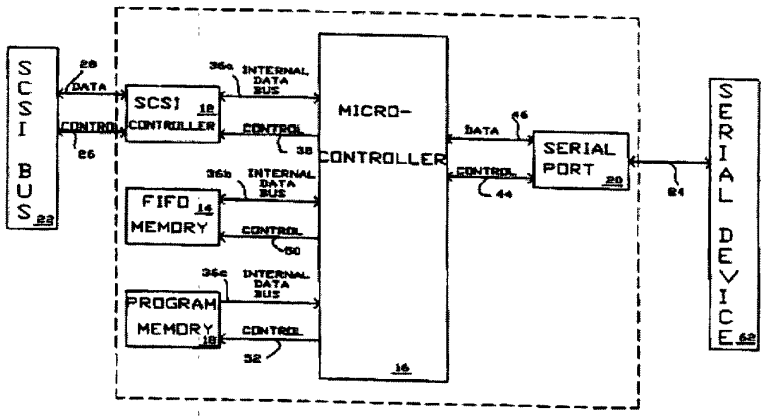

This figure identifies the same elements of the storage router depicted in Fig. 4 of the '972 Patent, such as a SCSI bus, Serial Device (Fibre Channel), and a memory (buffer). Even though a Fibre Channel controller is not explicitly shown in this figure, the written description makes it clear that the microprocessor and FIFO operate in conjunction to convert the parallel SCSI data into a serial format. Fibre Channel is a serial format, and the summary of the invention specifically references Fibre Channel as a serial format for use with the invention.

Below is Fig. 4 of the '972 Patent.

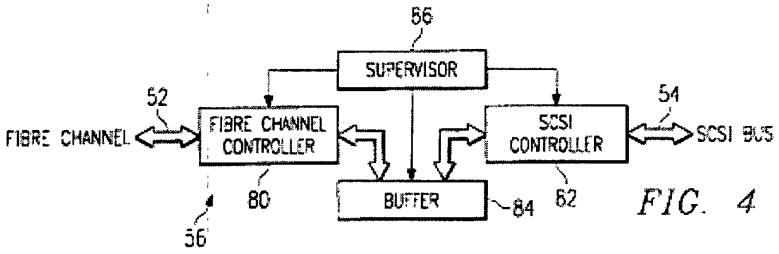

FIG. 4

The comparison between these two figures is striking. While Fig. 4 of the '972 Patent identifies data passing between the controllers and the buffer, it is important to note that this limitation is not present in Claim 1 of the '972 patent. This renders the functionality described by the two images to be nearly identical.

Oracle-Huawei-NetApp Ex. 1024, pg. 2312

The '924 Patent was referenced as prior art in the '972 Patent application by the Patentees. This shows that a person skilled in the art at the time, such as the Patentees, would have known that the '924 was a relevant and useful foundation from which to solve the problems identified supra by the Patentees.

The '924 Patent addresses an adapter for facilitating communications between a Fibre Channel device and a SCSI device. This was also well known as described above in reference to the patents issued to Chatwani and Arrowood. The '924 structure allows for Fibre Channel to SCSI interfacing using native low-level block protocols, as discussed above. The use of low-level block protocols was also known in the prior art as shown in the patents issued to Malladi and Berman, shown above and addressed the known issue of reducing data translation requests. Further, the patentees admitted that Figure 2 of the '972 Patent (showing a Fibre Channel to SCSI storage router) was prior art.

While the '924 Patent addresses a single device on each side of the adapter, the principal could be expanded to a number of such devices. This is true where, as here, part of the statement of the problem in the field as sworn to by the inventor of the '972 Patent addressed multiple devices. This would include multiple Fibre Channel devices cooperating with multiple SCSI storage units.

At the time of the '972 Patent Application, a person skilled in the art trying to solve the problem of addressability of devices (as identified by the patentees) would certainly have relied upon disclosures in the prior art referring to access control from such sources as the patents issued to Oeda, Yung, Hefferon, DeKoning, Abadi, Hunnicutt, Raz, and Dauerer discussed above. Access control could be combined with transparent bridging between Fibre Channel devices and SCSI devices, which was well known in the art. See U.S. Patent No. 5,802,278 to Isfeld, et al, above. This combination provides virtual local storage as defined in the '972 Patent. (Exhibit 1).

Oracle-Huawei-NetApp Ex. 1024, pg. 2313

Access control is not limited to any single embodiment. As identified in the written description of the '972 Patent, "Storage router 56 allows the configuration and modification of the storage allocated to each attached workstation 58 through the use of mapping tables or other mapping techniques." '972 Patent, starting at Column 4, Line 7. The claims of the '972 Patent cover any mapping techniques, and not just tables or lists. As such, a person skilled in the art would have known of the numerous ways described above to achieve access control.

When viewing the teachings of the *Haugdahl* and *Bursky* articles, the Patentees sworn statements concerning issues that drove the field at the time of the alleged invention of the '972 Patent, and the numerous prior art references, it becomes clear that a person skilled in the art would have know to combine the references cited above and arrive at the '972 alleged invention.

Claim 2

Claim 2 depends from claim 1 and states:

> 2. The storage router of claim 1, wherein the configuration maintained by the supervisor unit includes an allocation of subsets of storage space to associated Fibre Channel devices, wherein each subset is only accessible by the associated Fibre Channel device.

This claim specifies that each subset of storage space is only accessible by the associated Fibre Channel device.

This purported limitation is, however, just an aspect implied by the phrase "access controls" as found in Claim 1. If "access controls" mean "provides controls which limit a computer's access to a specific subset of storage devices or sections of a single storage device" (Exhibit 6, page 15), then limiting access to associate Fibre Channel devices is simply one form of access control.

As discussed above with respect to Claim 1, the Maxstrat Gen5, CRD-5500 and IFT-3000 manuals all document exactly this kind of access control. Claim 2 is thus anticipated by the Gen5 RAID controller manuals, and rendered obvious by the CRD-5500 and IFT-3000 RAID controller manuals.

Claim 3.

Claim 3 depends from claim 2 and states:

> 3. The storage router of claim 2, wherein the Fibre Channel devices comprise workstations.

Patentees own admissions, supra, identify that it was well known in the art that workstations were used routinely in conjunction with Fibre Channel. In fact, the entire question of using a storage router would be moot if there were no workstations involved. This claim is squarely met in the prior art and a skilled person in the field would have found it obvious to connect workstations to the host (Fibre Channel) side of a storage router.

Claim 4.

Claim 4 depends from claim 2 and states:

> 4. The storage router of claim 2, wherein the SCSI storage devices comprise hard disk drives.

Again, the Patentees own admissions, supra, identify that SCSI storage devices were routinely in the prior art. A person skilled in the art would have found it obvious to connect a SCSI storage device to the SCSI side of a storage router.

Claim 5.

Claim 5 depends from claim 1 and states:

Oracle-Huawei-NetApp Ex. 1024, pg. 2315

5. The storage router of claim 1, wherein the Fibre Channel controller comprises:

a Fibre Channel (FC) protocol unit operable to connect to the Fibre Channel transport medium;

a first-in-first-out queue coupled to the Fibre Channel protocol unit; and

a direct memory access (DMA) interface coupled to the first-in-first-out queue and to the buffer.

The written description in the '972 Patent identifies a Tachyon HPFC-5000 Fibre Channel controller as part of an embodiment of the alleged invention; prior art. As such, the Tachyon would have a FC protocol unit, a first-in-first out queue coupled to the FC protocol unit, and a DMA. This claim merely provides further definition for the Fibre Channel controller limitation found in the invalid claim 1. Thus, Claim 5 is anticipated and rendered obvious by the prior art.

Claim 6.

Claim 6 depends from claim 1 and states:

6. The storage router of claim 1, wherein the SCSI controller comprises:

a SCSI protocol unit operable to connect to the SCSI bus transport medium;

an internal buffer coupled to the SCSI protocol unit; and

a direct memory access (DMA) interface coupled to the internal buffer and to the buffer of the storage router.

The written description in the '972 Patent identifies a SYMBIOS 53C8xx SCSI controller as part of an embodiment of the alleged invention, and the SYMBIOS controller was prior art at that time. Claim 6, like Claim 5, merely provides further definition for the SCSI controller limitation found in Claim 1.

Claim 7.

Claim 7 states:

7. A storage network, comprising:

Oracle-Huawei-NetApp Ex. 1024, pg. 2316

a Fibre Channel transport medium;
a SCSI bus transport medium;
a plurality of workstations connected to the Fibre Channel transport medium;
a plurality of SCSI storage devices connected to the SCSI bus transport medium; and
a storage router interfacing between the Fibre Channel transport medium and the SCSI bus transport medium, the storage router providing virtual local storage on the SCSI storage devices to the workstations and operable:
to map between the workstations and the SCSI storage devices;
to implement access controls for storage space on the SCSI storage devices; and
to allow access from the workstations to the SCSI storage devices using native low level, block protocol in accordance with the mapping and access controls.

Claim 7 identifies a "storage router" as a limitation. Since the patentees have chosen to define the phrase "storage router" in Claim 1, Claim 7 thus includes the storage router of Claim 1. Claim 7 is therefore the storage router of Claim 1 combined with Fibre Channel communication links, SCSI cables, Fibre Channel-capable workstations and SCSI storage devices.

The only thing claim 7 adds to the alleged invention of claim 1 are the Fibre Channel workstations, SCSI storage devices, and cables (transport media). These are the components that would naturally be required to use the alleged invention of Claim 1 in its ordinary, intended manner. In addition, Figure 2 generally depicts a storage network. Since Figure 2 is admitted to be prior art, the idea of a storage network is also admittedly prior art. Finally, the manuals and claim charts for the Gen5, CRD-5500 and IFT-3000 show that these products were intended to be used with workstations and disk drives. Thus, Claim 7 is anticipated and rendered obvious by the same prior art that anticipates Claim 1 and renders Claim 1 obvious.

Claim 8.

Claim 8 depends from claim 7 and states:

Oracle-Huawei-NetApp Ex. 1024, pg. 2317

8. The storage network of claim 7, wherein the access controls include an allocation of subsets of storage space to associated workstations, wherein each subset is only accessible by the associated workstation.

This claim merely restates the elements of Claim 2, but applied to Claim 7. Just as Claim 2 merely describes a prior-art aspect of "access control," so does Claim 8.

Claim 9.

Claim 9 depends from claim 7 and states:

9. The storage network of claim 7, wherein the SCSI storage devices comprise hard disk drives.

This claim merely restates the elements of Claim 4, but applied to Claim 7. Just as Claim 4 merely describes prior-art hard disk drives, so does Claim 9.

Claim 10.

Claim 10 depends from claim 7 and states:

10. The storage network of claim 7, wherein the storage router comprises:

a buffer providing memory work space for the storage router;

a Fibre Channel controller operable to connect to and interface with a Fibre Channel transport medium, the Fibre Channel controller further operable to pull outgoing data from the buffer and to place incoming data into the buffer;

a SCSI controller operable to connect to and interface with a SCSI bus transport medium, the SCSI controller further operable to pull outgoing data from the buffer and to place incoming data into the buffer; and

a supervisor unit coupled to the Fibre Channel controller, the SCSI controller and the buffer, the supervisor unit operable:

to maintain a configuration for the SCSI storage devices that maps between Fibre Channel devices and SCSI storage devices and that implements the access controls for storage space on the SCSI storage devices; and

Oracle-Huawei-NetApp Ex. 1024, pg. 2318

to process data in the buffer to interface between the Fibre Channel controller and the SCSI controller to allow access from workstations to SCSI storage devices in accordance with the configuration.

This claim merely restates the remaining elements of Claim 1 that were not expressly enumerated in Claim 7. These elements are clearly found in the Gen5, CRD-5500, and IFT-3000 RAID controllers, in the Tachyon and SYMBIOS controllers, as well as in many of the prior art U.S. Patents and articles describe in the appendices and exhibits.

Claim 11

Claim 11 states:

11. A method for providing virtual local storage on remote SCSI storage devices to Fibre Channel devices, comprising:
interfacing with a Fibre Channel transport medium;
interfacing with a SCSI bus transport medium;
maintaining a configuration for SCSI storage devices connected to the SCSI bus transport medium that maps between Fibre Channel devices and the SCSI storage devices and that implements access controls for storage space on the SCSI storage devices; and
allowing access from Fibre Channel initiator devices to SCSI storage devices using native low level, block protocol in accordance with the configuration.

This claim merely restates the limitations of Claim 1, but in the form of a method claim. As such, like Claim 1, this claim is anticipated and rendered obvious by the numerous cited examples of prior art. See Honeywell International, Inc. v. Universal Avionics Systems Corp, 288 F.Supp.2d 638 (D.Del. 2003).

Claim 12.

Claim 12 depends from claim 11 and states:

12. The method of claim 11, wherein maintaining the configuration includes allocating subsets of storage space to associated Fibre Channel devices, wherein each subset is only accessible by the associated Fibre Channel device.

Oracle-Huawei-NetApp Ex. 1024, pg. 2319

This claim merely restates the elements of Claim 2, but applied to Claim 11. Just as Claim 2 merely describes a prior-art aspect of "access control," so does Claim 12.

Claim 13.

Claim 13 depends from claim 12 and states:

> 13. The method of claim 12, wherein the Fibre Channel devices comprise workstations.

This claim merely restates the elements of Claim 3, but applied to Claim 12. Just as Claim 3 merely describes prior-art workstations, so does Claim 13.

Claim 14.

Claim 14 depends from claim 12 and states:

> 14. The method of claim 12, wherein the SCSI storage devices comprise hard disk drives.

This claim merely restates the elements of Claim 4, but applied to Claim 12. Just as Claim 4 merely describes prior-art hard disk drives, so does Claim 14.

As has been shown and amply demonstrated by the Maxstrat Gen5 manuals, all claims of the '972 Patent are anticipated under 35 U.S.C. §102 by printed publications. In addition, as demonstrated by the CRD-5500 manuals, IFT-3000 manuals, and numerous cited publications and U.S. Patents, all claims of the '972 Patent are also rendered obvious under 35 U.S.C. §103 by printed publications.

XII. THERE ARE NO SECONDARY CONSIDERATIONS THAT WOULD INDICATE THAT THE ALLEGED INVENTION WAS NOT OBVIOUS

Oracle-Huawei-NetApp Ex. 1024, pg. 2320

Secondary considerations for nonobviousness can include evidence of commercial success, long felt but unsolved needs, and failure of others. Graham v. John Deere Co., 383 U.S. 1, 17-18, 86 S.Ct. 684, 15 L.Ed.2d 545 (1966). As discussed above, there were no long felt but unsolved needs that the alleged invention addressed. Furthermore, there is no indication that others attempted and failed to arrive at the alleged invention.

As to commercial success, there must be a sufficient relationship, or "nexus," between the commercial success and the patented invention. Demaco Corp. v. F. Von Langsdorff Licensing Ltd., 851 F.2d 1387, 1392 (C.A.Fed.1988). "The term 'nexus' is often used, in this context, to designate a legally and factually sufficient connection between the proven success and the patented invention, such that the objective evidence should be considered in the determination of nonobviousness." Id at 1392. The burden of proof as to this connection or nexus resides with the Patentee. Id.

Crossroads, the assignee of the '972 Patent, has never manufactured a product that covers the '972 Patent. Crossroads has never even written the code necessary to implement access controls on a router. While Crossroads may contend that there has been licensing of the '972 Patent, there is no indication that any such licensing was a result of the invention as opposed to a desire on the part of the licensee to avoid the litigious bent of the Crossroads. There is no evidence of any nexus that any licensing was the result of the success of the alleged invention as embodied in the '972 Patent and market driven forces where a customer sought said invention. The Inventors have never made a router product that performs access controls, as described in the '972 Patent; in fact, they have never even written any software that can perform access controls. There is no indication of secondary considerations.

XIII. IN CONCLUSION, THE '972 PATENT IS INVALID AS BEING ANTICIPATED BY THE MAXSTRAT GEN5 AND AS BEING OBVIOUS IN LIGHT OF THE NUMEROUS MOTIVATIONS TO COMBINE AND THE VAST PRIOR ART

Oracle-Huawei-NetApp Ex. 1024, pg. 2321

The Maxstrat GEN5 satisfies every limitation that exists in the claims of the '972 Patent. Thus, the GEN5 anticipates the '972 Patent and therefore the '972 Patent is invalid. But for adding the Fibre Channel transport medium as a means of connecting hosts to a router device, the CRD-5500, IFT-3000 and Iceberg (as well as the DEC HSZ70) also anticipate the '972 Patent; the use of the Fibre Channel transport medium to connect hosts to a router device would have been obvious to one skilled in the art at the time of the '972 Patent.

The patentees have admitted under oath that the only inventive aspect of the '972 Patent was the movement of the "access controls" function from the network server into the router device. However, the combining of a storage router and access control and thereby arriving at the alleged invention of the '972 patent would have been obvious to one skilled in the art based on the numerous motivations to combine and the prior art references.

The motivation to combine elements in the field to arrive at a storage router with a Fibre-to-SCSI configuration that performs access controls is evident from the Patentees' sworn testimony as to the general needs known in the art at the time of the invention and the numerous suggestions and teachings found in the *Haugdahl* article and other prior art.

As to the question of obviousness, the existence of differences between prior art and the invention is not determinative. "But the mere existence of differences between the prior art and an invention does not establish the invention's nonobviousness. The gap between the prior art and respondent's system is simply not so great as to render the system nonobvious to one reasonably skilled in the art." Dann v. Johnston 425 U.S. 219, 230, 96 S.Ct. 1393, 1399 (U.S.Cust. & Pat.App.,1976)(a computer system case). In the present case, the gap is nonexistent due to the nature of the prior art and the clear motivation to combine. The '972 Patent is invalid as being anticipated and obvious.

Oracle-Huawei-NetApp Ex. 1024, pg. 2322

Appendix and Exhibit List for '972 Reexamination

Following is a description of the appendices and exhibits included herein.

Appendix A	Analysis of the meaning of claim terms of '972 Patent
Appendix B	Matrix of claim elements of '972 Patent found in prior art
Appendix C	Listing of possible prior art combinations showing obviousness

Exhibit 1	Copies of patents and printed publications relied upon	
Exhibit 2	Patent at issue (5,941,972)	
Exhibit 3	Certification of service	
Exhibit 4	Differences between claims of '972, '036, '035 and '854 Patents	
Exhibit 5	Motion for Summary Judgment, *Crossroads v. Dot Hill*	
	MSJ Exhibits 3, 4 & 5	Declarations of DEC HSZ70 inventor & witnesses
	MSJ Exhibits 6, 7 & 8	DEC HSZ70 Manuals
	MSJ Exhibit 11	DEC HSZ70 Software excerpt
	MSJ Exhibit 15	Chart comparing DEC HSZ70 with claims of '035 Patent
Exhibit 6	Markman Order, *Crossroads v. Chaparral*	
Exhibit 7	*Marlow* case	
Exhibit 8	*McGaughey* case	
Exhibit 9	Trial transcript of Hoese, *Crossroads v. Chaparral*	
Exhibit 10	Chart comparing Gen5 with claims of '972 Patent	
Exhibit 11	Gen5 System Guide	
Exhibit 12	Gen5 GUI User's Guide	
Exhibit 13	Declaration that Gen5 configuration was available	
Exhibit 14	CRD-5500 User's Manual	
Exhibit 15	Chart comparing IFT-3000 with claims of '972 Patent	
Exhibit 16	IFT-3000 Instruction Manual	
Exhibit 17	*Flasck* case	
Exhibit 18	*Haugdahl* article	
Exhibit 19	*Bursky* article	
Exhibit 20	Deposition of Hoese, *Crossroads v. Chaparral*	
Exhibit 21	Trial transcript of Russell, *Crossroads v. Chaparral*	
Exhibit 22	Charts comparing prior art with claims of '972 Patent	

Oracle-Huawei-NetApp Ex. 1024, pg. 2323

We respectfully request that reexamination of U.S. Patent No. 5,941,972 be undertaken based upon the substantial new question of Patentability raised herein.

July 19, 2004

Respectfully submitted,
Wang & Patel, PC
1301 Dove Street, Suite 1050
Newport Beach CA 92660
(949) 833-8483

Natu J. Patel
Reg. No. 39559

Enclosures:

- Transmittal Form PTO/SB/57
- Appendices A, B and C
- Exhibits 1 through 22
- Check for $2,520.00, Check no.: 3405

I hereby certify that this is being deposited with the U.S. Postal Service "Express Mail Post Office to Addressee" service under 37 CFR § 1.10 on the date indicated below and is addressed to: Mail Stop Ex Parte Reexam, Commissioner for Patents, P.O. Box 1450, Alexandria, VA 22313-1450 on July 19, 2004. Express Mail Label Nos.: **EO 904 389 855 US (box 1) and EO 904 389 815 US (box 2)**.

Dated: July 19, 2004 Signed

Print Name: Larry E. Severin

PTO/SB/21 (09-04)
Approved for use through 07/31/2006. OMB 0651-0031
U.S. Patent and Trademark Office; U.S. DEPARTMENT OF COMMERCE

Oracle-Huawei-NetApp Ex. 1024, pg. 2324

APPENDICES

- APPENDIX A
- APPENDIX B
- APPENDIX C

APPENDIX A

Oracle-Huawei-NetApp Ex. 1024, pg. 2326

5,941,972 Patent Claim 1	Definition of limitation	Patentee's Admissions and the Prior Art
What is claimed is: 1. A storage router for providing	"Storage router". A device which provides virtual local storage, maps, implements access controls, and allows access using native low level block protocols, and which forwards data from devices (such as a personal computer) connected on one side of the router, through the router, to storage devices connected on the other side of the storage router. *Chaparral* Markman Order	"Storage router" Admission by patentee. Trial transcript of Hoese. Page 81, starting at line 3. Q. Figure – well, figure 2 is not your invention, right, sir? A. Figure 2 is not my invention. Q. And this description is in reference to figure 2, and this description mentions native low-level block protocols and mentions mapping, and you say figure 2 is not your invention? A. That's correct. By admission of the patentee, mapping and low-level block protocol are not the patentee's invention. They are, by admission, part of the prior art. "Access control" The specification discloses aspects of a distributed security system in which access to system resources is controlled by access control lists associated with each system resource. U.S. Patent No. 5,315,657 to Abadi, et al. Issued: May 24, 1994 Filed: September 28, 1990 Access control lists are used to define the extent to which different users will be allowed access to different resources on a server…… Depending on the level of access control implemented on a given

Redacted

		server, access control lists for a given disk defines the access restrictions for all the resources or files stored on that disk. U.S. Pat. No. 5,889,952 To Hunnicutt, et al Issued: March 30, 1999 Filed: August 14, 1996 Under the "STATEMENT OF THE PROBLEM" as part of prior art as of the filing date of August 14, 1996. Each host processor has exclusive access to its own set of storage devices and it cannot access the storage device of another host. U.S. Pat. No. 5,860,137 To Raz, et al Issued: January 12, 1999 Filed: July 21, 1995 Under the "BACKGROUND OF THE INVENTION" As part of prior art as of the filing date of July 21, 1995 These groups of files from virtual disks, sometimes referred to as mini-disks, which for purposes of this description are identified by a number. A list of authorized users must exist for each mini-disk. U.S. Pat. No. 5,469,576 To Dauerer, et al Issued: November 21, 1995 Filed: March 22, 1993 "Virtual local storage" Admission by patentee. Trial transcript of Hoese. Page 81, starting at line 3. Q. Figure – well, figure 2 is not your invention, right, sir? A. Figure 2 is not my invention.

Oracle-Huawei-NetApp Ex. 1024, pg. 2328

		In regards to Fig. 2, "A storage router 44 then serves to interconnect these mediums and provide devices on either medium global, transparent access to devices on the other medium." '972 patent,, Col. 3 starting at line 32. By admission of the patentee, transparent access to devices is in the prior art.
virtual local storage on	"Virtual local storage". A specific subset of overall data, stored in storage devices that are indirectly connected to and capable of physical separation from the devices connected to the first transport medium, which has the appearance and characteristics of storage on a device directly connected or contained within the workstation. *Chaparral* Markman Order.	"Virtual local storage" Admission by patentee. Trial transcript of Hoese. Page 81, starting at line 3. Q. Figure – well, figure 2 is not your invention, right, sir? B. Figure 2 is not my invention. In regards to Fig. 2, "A storage router 44 then serves to interconnect these mediums and provide devices on either medium global, transparent access to devices on the other medium." '972 patent,, Col. 3 starting at line 32. By admission of the patentee, transparent access to devices is in the

Oracle-Huawei-NetApp Ex. 1024, pg. 2329

		prior art. "Access control" The specification discloses aspects of a distributed security system in which access to system resources is controlled by access control lists associated with each system resource. U.S. Patent No. 5,315,657 to Abadi, et al. Issued: May 24, 1994 Filed: September 28, 1990 Access control lists are used to define the extent to which different users will be allowed access to different resources on a server..... Depending on the level of access control implemented on a given server, access control lists for a given disk defines the access restrictions for all the resources or files stored on that disk. U.S. Pat. No. 5,889,952 To Hunnicutt, et al Issued: March 30, 1999 Filed: August 14, 1996 Under the "STATEMENT OF THE PROBLEM" as part of prior art as of the filing date of August 14, 1996. Each host processor has exclusive access to its own set of storage devices and it cannot access the storage device of another host. U.S. Pat. No. 5,860,137 To Raz, et al Issued: January 12, 1999 Filed: July 21, 1995 Under the "BACKGROUND OF THE INVENTION" As part of prior art as of the filing date of July 21, 1995 These groups of files from virtual

Oracle-Huawei-NetApp Ex. 1024, pg. 2330

		disks, sometimes referred to as mini-disks, which for purposes of this description are identified by a number. A list of authorized users must exist for each mini-disk. U.S. Pat. No. 5,469,576 To Dauerer, et al Issued: November 21, 1995 Filed: March 22, 1993
remote	"Remote" Indirectly connected and capable of physical separation. *Chaparral* Markman Order.	"Remote" Admission by patentee. Trial transcript of Hoese. Page 81, starting at line 3. Q. Figure – well, figure 2 is not your invention, right, sir? C. Figure 2 is not my invention. Fig. 2 shows indirectly connected and separate storage devices.
SCSI storage devices to Fibre Channel devices, comprising:		"Storage devices" Admission by patentee. Trial transcript of Hoese. Page 81, starting at line 3. Q. Figure – well, figure 2 is not your invention, right, sir? D. Figure 2 is not my invention. Fig. 2 shows storage devices.

a buffer providing memory work space for the storage router;	A buffer is a memory device that is utilized to temporarily hold data. *Chaparral* Markman Order.	U.S. Patent No. 5,748,924 to Llorens, et al, filed October 17, 1995, issued May 5, 1998.
a Fibre Channel controller operable to connect to and interface with a Fibre Channel transport medium;	A device that interfaces with a Fibre Channel transport medium. *Chaparral* Markman Order.	U.S. Patent No. 5,748,924 to Llorens, et al, filed October 17, 1995, issued May 5, 1998.
a SCSI controller operable to connect to and interface with a SCSI bus transport medium; and	A device that interfaces with a SCSI bus transport medium. *Chaparral* Markman Order.	U.S. Patent No. 5,748,924 to Llorens, et al, filed October 17, 1995, issued May 5, 1998.
a supervisor unit coupled to the Fibre Channel controller, the SCSI controller and the buffer, the supervisor unit operable to	A microprocessor programmed to process data in a buffer in order to map between devices connected to the first transport medium and storage devices and which implements access controls. *Chaparral* Markman Order.	U.S. Patent No. 5,748,924 to Llorens, et al, filed October 17, 1995, issued May 5, 1998.
Maintain a configuration for SCSI storage devices connected to the SCSI bus transport medium that	Keeping a modifiable setting of information. *Chaparral* Markman Order.	
Maps between Fibre Channel devices connected to the Fibre	To create a path from a device on one side of the storage router to a device on the other side of the router, i.e. from a Fibre	Admission by patentee. Trial transcript of Hoese. Page 81, starting at line 3.

Oracle-Huawei-NetApp Ex. 1024, pg. 2332

Channel transport medium and the SCSI storage devices, and that	Channel device to a SCSI device (or vice-versa). A "map" contains a representation of devices on each side of the storage router, so that when a device on one side of the storage router wants to communicate with a device on the other side of the storage router, storage router can connect the devices. *Chaparral* Markman Order.	Q. Figure – well, figure 2 is not your invention, right, sir? R. Figure 2 is not my invention. Q. And this description is in reference to figure 2, and this description mentions native low-level block protocols and mentions mapping, and you say figure 2 is not your invention? A. That's correct. By admission of the patentee, mapping is not part of the invention and is part of the prior art. As to a map, "Storage router 44 uses tables to map devices from one medium to the other and distributes requests and data across Fiber Channel 32 and SCSI bus 34 without any security access controls." '972 patent,, Col. 3 starting at line 50. U.S. Patent No. 5,748,924 to Llorens , et al, filed October 17, 1995, issued May 5, 1998.
implements access controls for storage space on the storage devices and	The phrase "implements access controls for storage space on the SCSI storage devices" means provides controls which limit a computer's access to a specific subset of storage devices or sections of a single storage devices. *Chaparral* Markman Order.	"Access control" The specification discloses aspects of a distributed security system in which access to system resources is controlled by access control lists associated with each system resource. U.S. Patent No. 5,315,657 to Abadi, et al. Issued: May 24, 1994 Filed: September 28, 1990 Access control lists are used to define the extent to which different

		users will be allowed access to different resources on a server..... Depending on the level of access control implemented on a given server, access control lists for a given disk defines the access restrictions for all the resources or files stored on that disk. U.S. Pat. No. 5,889,952 To Hunnicutt, et al Issued: March 30, 1999 Filed: August 14, 1996 Under the "STATEMENT OF THE PROBLEM" as part of prior art as of the filing date of August 14, 1996. Each host processor has exclusive access to its own set of storage devices and it cannot access the storage device of another host. U.S. Pat. No. 5,860,137 To Raz, et al Issued: January 12, 1999 Filed: July 21, 1995 Under the "BACKGROUND OF THE INVENTION" As part of prior art as of the filing date of July 21, 1995 These groups of files from virtual disks, sometimes referred to as mini-disks, which for purposes of this description are identified by a number. A list of authorized users must exist for each mini-disk. U.S. Pat. No. 5,469,576 To Dauerer, et al Issued: November 21, 1995 Filed: March 22, 1993
to process data in the buffer to interface between the Fibre Channel		U.S. Patent No. 5,748,924 to Llorens, et al, filed October 17, 1995, issued May 5, 1998.

controller and the SCSI controller to allow access from Fibre Channel initiator devices to SCSI storage devices using native low level, block protocols in accordance with the configuration.		

APPENDIX B

Oracle-Huawei-NetApp Ex. 1024, pg. 2336

Infortrend 103 Obviousness Claim Comparison Chart for Patent No. '972

Independent Claim 1 Elements

	Buffer	Fibre Controller	SCSI Controller	Supervisor Unit	Map	Access Control	Low Protocols
High Performance							
FCS/ATM							
FC Storage							
Implementing FC							
New Serial I/Os							
SCSI Apps							
6,219,771							
6,185,203							
6,108,684							
6,081,849							
6,073,218							
6,055,603							
5,959,994							
5,935,260							
5,933,824							
5,848,251							
5,835,496							
5,812,754							
5,809,328							
5,805,816							
5,768,623							
5,748,924							
5,727,218							
5,634,111							
5,632,012							
5,621,902							
5,613,082							
5,581,724							
5,581,709							
5,568,648							
5,564,019							
5,548,791							
5,544,313							
5,537,585							
5,519,695							
5,511,169							
5,507,032							
5,495,474							
5,491,812							
5,471,609							
5,469,576							
5,459,857							
5,430,855							
5,423,026							
5,420,988							
5,416,915							
5,410,697							
5,410,667							
5,403,639							
5,396,596							
5,388,246							
5,388,243							
5,379,398							
5,379,385							
5,367,646							
5,361,347							
5,331,673							
5,301,290							
5,297,262							
5,247,638							
5,239,654							
5,226,143							
5,214,778							
5,212,785							
5,210,866							
5,202,856							
5,193,184							
5,193,168							
5,185,876							
5,155,845							
5,124,987							
5,077,736							
5,077,732							
4,897,874							
4,835,674							
4,825,406							
4,821,179							
4,811,278							
4,807,180							
4,787,028							
4,697,232							
4,533,996							
4,504,927							
4,455,605							

Highly Confidential

APPENDIX C

Oracle-Huawei-NetApp Ex. 1024, pg. 2338

Combinations of Prior Art
Forming a Basis for Rejection under 35 U.S.C. §103 for
Claim 1 of U.S. Patent No. 5,941,972

The chart following in the next pages shows how U.S. patents and other printed publications may be combined to form a basis for rejection of U.S. Patent No. 5,941,972 ("the '972 Patent") under 35 U.S.C. §103.

All U.S. patents listed here were filed before the filing date of the '972, which is December 31, 1997. All printed publications listed here that are not U.S. patents were published before the subject matter disclosed in the '972 Patent was invented, and thus are available as prior art under 35 U.S.C. §102(a). Some of these U.S. patents and printed publications were published more than one year before the '972 Patent was filed, and thus are also available as prior art under 35 U.S.C. §102(b).

Each primary prior art reference is listed in the chart as "Primary Reference," followed on the same line by a code listed as "Claim Elements" describing which claim elements are present in that primary prior art reference. For each primary prior art reference, a list of secondary prior art references are listed as "Secondary References" with an accompanying "Claim Elements" code describing which claim elements are present in that secondary prior art reference. When the primary art reference is combined with any one of the secondary prior art references, all elements of Claim 1 are met so as to support invalidation of Claim 1 of the '972 Patent under 35 U.S.C. §103.

Here are the claim element codes, a short paraphrased description in parentheses, and the corresponding portions of Claim 1 of the '972 Patent:

-	"1. A storage router for providing virtual local storage on remote SCSI storage devices to Fibre Channel devices, comprising:"
A	**(Buffer)** "a buffer providing memory work space for the storage router;"
B	**(Fibre Channel Controller)** "a Fibre Channel controller operable to connect to and interface with a Fibre Channel transport medium;"
C	**(SCSI Controller)** "a SCSI controller operable to connect to and interface with a SCSI bus transport medium; and"
D	**(Supervisor Unit)** "a supervisor unit coupled to the Fibre Channel controller, the SCSI controller and the buffer, the supervisor unit operable:"
E	**(Map)** "to maintain a configuration for SCSI storage devices connected to the SCSI bus transport medium that maps between Fibre Channel devices and SCSI storage devices"

Oracle-Huawei-NetApp Ex. 1024, pg. 2339

F	**(Access Control)** "and that implements access controls for storage space on the SCSI storage devices; and"
-	"to process data in the buffer to interface between the Fibre Channel controller and the SCSI controller to allow access from Fibre Channel initiator devices to SCSI storage devices"
G	**(Low Protocols)** "using native low level, block protocol in accordance with the configuration."

This breakdown of elements is the same as that used in the analysis of Claim 1 in Appendix B and Exhibit 22, where the specific portions of the prior art references are related to elements of claims of the '972 Patent. The preamble to Claim 1 does not have a claim element code, because the preamble is not a limitation. The "to process the data ..." portion of claim 1 also does not have a claim element code, because this aspect is a natural and obvious consequence of being a storage router as described, and thus does not represent an independent limitation of Claim 1.

For example, Appendix B shows that U.S. Patent No. 6,219,771 has elements A, B, C, D, E, and G, but possibly not element F. The section of the detailed matrix in Exhibit 22 for U.S. Patent No. 6,219,771 includes specific references that meet many elements of Claim 1 of the '972 Patent, but no reference is listed for claim element F for Access Control. This means that U.S. Patent No. 6,219,771 may be combined with another prior art reference that includes a description of Access Control to support a 35 U.S.C. §103 rejection. Therefore, in the chart in this Exhibit, the Primary Reference entry for U.S. Patent No. 6,219,771 is followed by claim element codes ABCDEG. Listed below this primary reference is a list of several secondary prior art references that all include at least claim element F, so that any of these secondary pieces of prior art can be combined with U.S. Patent No. 6,219,771 to describe all the elements of Claim 1 and thereby render Claim 1 of the '972 Patent obvious.

Oracle-Huawei-NetApp Ex. 1024, pg. 2340

5,941,972 Obviousness Combinations (need ABCDEFG)

Primary Reference: SCSI applications on Fibre *Claim Elements: ABCEG*

Secondary References	Claim Elements
High-Performance Data ...	DEFG
Fibre channel storage ...	ABCDFG
5,848,251	BCDFG
5,634,111	ACDEF
5,613,082	ADEF
5,379,398	ADEF

Primary Reference: New Serial I/Os Speed ... *Claim Elements: BCE*

Secondary References	Claim Elements
Fibre channel storage ...	ABCDFG

Primary Reference: Implementing a Fibre ... *Claim Elements: AEG*

Secondary References	Claim Elements
Fibre channel storage ...	ABCDFG
5,848,251	BCDFG

Primary Reference: High-Performance Data ... *Claim Elements: DEFG*

Secondary References	Claim Elements
SCSI applications on Fibre...	ABCEG
Fibre channel storage ...	ABCDFG
6,219,771	ABCDEG
6,055,603	ABCFG
5,935,260	ABCG
5,459,857	ABCE
5,396,596	ABCDG

Primary Reference: Fibre channel storage ... *Claim Elements: ABCDFG*

Secondary References	Claim Elements
SCSI applications on Fibre...	ABCEG

Oracle-Huawei-NetApp Ex. 1024, pg. 2341

New Serial I/Os Speed ...	BCE
Implementing a Fibre ...	AEG
High-Performance Data ...	DEFG
Fiber Channel (FCS)/ATM ...	ABDEG
6,219,771	ABCDEG
6,185,203	ABDE
5,959,994	AEG
5,809,328	ABDEG
5,805,816	AEF
5,768,623	E
5,727,218	ABDEG
5,634,111	ACDEF
5,632,012	AE
5,621,902	ADEG
5,613,082	ADEF
5,581,724	AEG
5,581,709	ADE
5,568,648	E
5,548,791	AE
5,544,313	E
5,537,585	E
5,519,695	ABEG
5,511,169	DE
5,507,032	E
5,471,609	E
5,459,857	ABCE
5,430,855	AE
5,423,026	E
5,420,988	EG
5,416,915	AE
5,410,697	AE

Oracle-Huawei-NetApp Ex. 1024, pg. 2342

5,410,667	AE
5,403,639	AEFG
5,379,398	ADEF
5,379,385	AEG
5,367,646	AE
5,361,347	AEF
5,301,290	AE
5,297,262	ADEG
5,247,638	AEG
5,226,143	AE
5,214,778	ADE
5,210,866	AEG
5,193,184	AEFG
5,193,168	DE
5,155,845	AEG
5,124,987	AEG
5,077,736	ADEG
4,897,874	AEFG
4,807,180	AE
4,787,028	AE
4,697,232	AE
4,455,605	E

Primary Reference: Fiber Channel (FCS)/ATM *Claim Elements: ABDEG*

Secondary References	Claim Elements
Fibre channel storage …	ABCDFG
6,055,603	ABCFG
5,848,251	BCDFG
5,634,111	ACDEF

Primary Reference: 6,219,771 *Claim Elements: ABCDEG*

Secondary References	Claim Elements
High-Performance Data …	DEFG

Oracle-Huawei-NetApp Ex. 1024, pg. 2343

Fibre channel storage ...	ABCDFG
6,055,603	ABCFG
5,848,251	BCDFG
5,812,754	ABF
5,805,816	AEF
5,634,111	ACDEF
5,613,082	ADEF
5,564,019	F
5,469,576	F
5,403,639	AEFG
5,379,398	ADEF
5,361,347	AEF
5,193,184	AEFG
4,897,874	AEFG

Primary Reference: 6,185,203 *Claim Elements: ABDE*

Secondary References	Claim Elements
Fibre channel storage ...	ABCDFG
6,055,603	ABCFG
5,848,251	BCDFG

Primary Reference: 6,055,603 *Claim Elements: ABCFG*

Secondary References	Claim Elements
High-Performance Data ...	DEFG
Fiber Channel (FCS)/ATM ...	ABDEG
6,219,771	ABCDEG
6,185,203	ABDE
5,809,328	ABDEG
5,727,218	ABDEG
5,634,111	ACDEF
5,621,902	ADEG
5,613,082	ADEF
5,581,709	ADE

Oracle-Huawei-NetApp Ex. 1024, pg. 2344

5,511,169	DE
5,379,398	ADEF
5,297,262	ADEG
5,214,778	ADE
5,193,168	DE
5,077,736	ADEG

Primary Reference: 5,959,994 *Claim Elements: AEG*

Secondary References	Claim Elements
Fibre channel storage ...	ABCDFG
5,848,251	BCDFG

Primary Reference: 5,935,260 *Claim Elements: ABCG*

Secondary References	Claim Elements
High-Performance Data ...	DEFG
5,634,111	ACDEF
5,613,082	ADEF
5,379,398	ADEF

Primary Reference: 5,848,251 *Claim Elements: BCDFG*

Secondary References	Claim Elements
SCSI applications on Fibre...	ABCEG
Implementing a Fibre ...	AEG
Fiber Channel (FCS)/ATM ...	ABDEG
6,219,771	ABCDEG
6,185,203	ABDE
5,959,994	AEG
5,809,328	ABDEG
5,805,816	AEF
5,727,218	ABDEG
5,634,111	ACDEF
5,632,012	AE
5,621,902	ADEG

Oracle-Huawei-NetApp Ex. 1024, pg. 2345

5,613,082	ADEF
5,581,724	AEG
5,581,709	ADE
5,548,791	AE
5,519,695	ABEG
5,459,857	ABCE
5,430,855	AE
5,416,915	AE
5,410,697	AE
5,410,667	AE
5,403,639	AEFG
5,379,398	ADEF
5,379,385	AEG
5,367,646	AE
5,361,347	AEF
5,301,290	AE
5,297,262	ADEG
5,247,638	AEG
5,226,143	AE
5,214,778	ADE
5,210,866	AEG
5,193,184	AEFG
5,155,845	AEG
5,124,987	AEG
5,077,736	ADEG
4,897,874	AEFG
4,807,180	AE
4,787,028	AE
4,697,232	AE

Primary Reference: 5,812,754 *Claim Elements: ABF*

Secondary References **Claim Elements**

Oracle-Huawei-NetApp Ex. 1024, pg. 2346

6,219,771	ABCDEG

Primary Reference: 5,809,328 *Claim Elements: ABDEG*

Secondary References	Claim Elements
Fibre channel storage …	ABCDFG
6,055,603	ABCFG
5,848,251	BCDFG
5,634,111	ACDEF

Primary Reference: 5,805,816 *Claim Elements: AEF*

Secondary References	Claim Elements
Fibre channel storage …	ABCDFG
6,219,771	ABCDEG
5,848,251	BCDFG
5,748,924	BCDG
5,396,596	ABCDG

Primary Reference: 5,768,623 *Claim Elements: E*

Secondary References	Claim Elements
Fibre channel storage …	ABCDFG

Primary Reference: 5,748,924 *Claim Elements: BCDG*

Secondary References	Claim Elements
5,805,816	AEF
5,634,111	ACDEF
5,613,082	ADEF
5,403,639	AEFG
5,379,398	ADEF
5,361,347	AEF
5,193,184	AEFG
4,897,874	AEFG

Primary Reference: 5,727,218 *Claim Elements: ABDEG*

Secondary References	Claim Elements

Oracle-Huawei-NetApp Ex. 1024, pg. 2347

Fibre channel storage …	ABCDFG
6,055,603	ABCFG
5,848,251	BCDFG
5,634,111	ACDEF

Primary Reference: 5,634,111 *Claim Elements: ACDEF*

Secondary References	Claim Elements
SCSI applications on Fibre…	ABCEG
Fibre channel storage …	ABCDFG
Fiber Channel (FCS)/ATM …	ABDEG
6,219,771	ABCDEG
6,055,603	ABCFG
5,935,260	ABCG
5,848,251	BCDFG
5,809,328	ABDEG
5,748,924	BCDG
5,727,218	ABDEG
5,519,695	ABEG
5,396,596	ABCDG

Primary Reference: 5,632,012 *Claim Elements: AE*

Secondary References	Claim Elements
Fibre channel storage …	ABCDFG
5,848,251	BCDFG

Primary Reference: 5,621,902 *Claim Elements: ADEG*

Secondary References	Claim Elements
Fibre channel storage …	ABCDFG
6,055,603	ABCFG
5,848,251	BCDFG

Primary Reference: 5,613,082 *Claim Elements: ADEF*

Secondary References	Claim Elements
SCSI applications on Fibre…	ABCEG

Oracle-Huawei-NetApp Ex. 1024, pg. 2348

Fibre channel storage ...	ABCDFG
6,219,771	ABCDEG
6,055,603	ABCFG
5,935,260	ABCG
5,848,251	BCDFG
5,748,924	BCDG
5,396,596	ABCDG

Primary Reference: 5,581,724 *Claim Elements: AEG*

Secondary References	Claim Elements
Fibre channel storage ...	ABCDFG
5,848,251	BCDFG

Primary Reference: 5,581,709 *Claim Elements: ADE*

Secondary References	Claim Elements
Fibre channel storage ...	ABCDFG
6,055,603	ABCFG
5,848,251	BCDFG

Primary Reference: 5,568,648 *Claim Elements: E*

Secondary References	Claim Elements
Fibre channel storage ...	ABCDFG

Primary Reference: 5,564,019 *Claim Elements: F*

Secondary References	Claim Elements
6,219,771	ABCDEG

Primary Reference: 5,548,791 *Claim Elements: AE*

Secondary References	Claim Elements
Fibre channel storage ...	ABCDFG
5,848,251	BCDFG

Primary Reference: 5,544,313 *Claim Elements: E*

Secondary References	Claim Elements
Fibre channel storage ...	ABCDFG

Oracle-Huawei-NetApp Ex. 1024, pg. 2349

Primary Reference: 5,537,585 *Claim Elements: E*

Secondary References	Claim Elements
Fibre channel storage ...	ABCDFG

Primary Reference: 5,519,695 *Claim Elements: ABEG*

Secondary References	Claim Elements
Fibre channel storage ...	ABCDFG
5,848,251	BCDFG
5,634,111	ACDEF

Primary Reference: 5,511,169 *Claim Elements: DE*

Secondary References	Claim Elements
Fibre channel storage ...	ABCDFG
6,055,603	ABCFG

Primary Reference: 5,507,032 *Claim Elements: E*

Secondary References	Claim Elements
Fibre channel storage ...	ABCDFG

Primary Reference: 5,471,609 *Claim Elements: E*

Secondary References	Claim Elements
Fibre channel storage ...	ABCDFG

Primary Reference: 5,469,576 *Claim Elements: F*

Secondary References	Claim Elements
6,219,771	ABCDEG

Primary Reference: 5,459,857 *Claim Elements: ABCE*

Secondary References	Claim Elements
High-Performance Data ...	DEFG
Fibre channel storage ...	ABCDFG
5,848,251	BCDFG

Primary Reference: 5,430,855 *Claim Elements: AE*

Secondary References	Claim Elements

Oracle-Huawei-NetApp Ex. 1024, pg. 2350

Fibre channel storage ...	ABCDFG
5,848,251	BCDFG

Primary Reference: 5,423,026 *Claim Elements: E*

Secondary References	Claim Elements
Fibre channel storage ...	ABCDFG

Primary Reference: 5,420,988 *Claim Elements: EG*

Secondary References	Claim Elements
Fibre channel storage ...	ABCDFG

Primary Reference: 5,416,915 *Claim Elements: AE*

Secondary References	Claim Elements
Fibre channel storage ...	ABCDFG
5,848,251	BCDFG

Primary Reference: 5,410,697 *Claim Elements: AE*

Secondary References	Claim Elements
Fibre channel storage ...	ABCDFG
5,848,251	BCDFG

Primary Reference: 5,410,667 *Claim Elements: AE*

Secondary References	Claim Elements
Fibre channel storage ...	ABCDFG
5,848,251	BCDFG

Primary Reference: 5,403,639 *Claim Elements: AEFG*

Secondary References	Claim Elements
Fibre channel storage ...	ABCDFG
6,219,771	ABCDEG
5,848,251	BCDFG
5,748,924	BCDG
5,396,596	ABCDG

Primary Reference: 5,396,596 *Claim Elements: ABCDG*

Oracle-Huawei-NetApp Ex. 1024, pg. 2351

Secondary References	Claim Elements
High-Performance Data ...	DEFG
5,805,816	AEF
5,634,111	ACDEF
5,613,082	ADEF
5,403,639	AEFG
5,379,398	ADEF
5,361,347	AEF
5,193,184	AEFG
4,897,874	AEFG

Primary Reference: 5,379,398 *Claim Elements: ADEF*

Secondary References	Claim Elements
SCSI applications on Fibre...	ABCEG
Fibre channel storage ...	ABCDFG
6,219,771	ABCDEG
6,055,603	ABCFG
5,935,260	ABCG
5,848,251	BCDFG
5,748,924	BCDG
5,396,596	ABCDG

Primary Reference: 5,379,385 *Claim Elements: AEG*

Secondary References	Claim Elements
Fibre channel storage ...	ABCDFG
5,848,251	BCDFG

Primary Reference: 5,367,646 *Claim Elements: AE*

Secondary References	Claim Elements
Fibre channel storage ...	ABCDFG
5,848,251	BCDFG

Primary Reference: 5,361,347 *Claim Elements: AEF*

Secondary References	Claim Elements

Oracle-Huawei-NetApp Ex. 1024, pg. 2352

Fibre channel storage …	ABCDFG
6,219,771	ABCDEG
5,848,251	BCDFG
5,748,924	BCDG
5,396,596	ABCDG

Primary Reference: 5,301,290 *Claim Elements: AE*

Secondary References	Claim Elements
Fibre channel storage …	ABCDFG
5,848,251	BCDFG

Primary Reference: 5,297,262 *Claim Elements: ADEG*

Secondary References	Claim Elements
Fibre channel storage …	ABCDFG
6,055,603	ABCFG
5,848,251	BCDFG

Primary Reference: 5,247,638 *Claim Elements: AEG*

Secondary References	Claim Elements
Fibre channel storage …	ABCDFG
5,848,251	BCDFG

Primary Reference: 5,226,143 *Claim Elements: AE*

Secondary References	Claim Elements
Fibre channel storage …	ABCDFG
5,848,251	BCDFG

Primary Reference: 5,214,778 *Claim Elements: ADE*

Secondary References	Claim Elements
Fibre channel storage …	ABCDFG
6,055,603	ABCFG
5,848,251	BCDFG

Primary Reference: 5,210,866 *Claim Elements: AEG*

Secondary References	Claim Elements

Oracle-Huawei-NetApp Ex. 1024, pg. 2353

Fibre channel storage ...	ABCDFG
5,848,251	BCDFG

Primary Reference: 5,193,184 *Claim Elements: AEFG*

Secondary References	Claim Elements
Fibre channel storage ...	ABCDFG
6,219,771	ABCDEG
5,848,251	BCDFG
5,748,924	BCDG
5,396,596	ABCDG

Primary Reference: 5,193,168 *Claim Elements: DE*

Secondary References	Claim Elements
Fibre channel storage ...	ABCDFG
6,055,603	ABCFG

Primary Reference: 5,155,845 *Claim Elements: AEG*

Secondary References	Claim Elements
Fibre channel storage ...	ABCDFG
5,848,251	BCDFG

Primary Reference: 5,124,987 *Claim Elements: AEG*

Secondary References	Claim Elements
Fibre channel storage ...	ABCDFG
5,848,251	BCDFG

Primary Reference: 5,077,736 *Claim Elements: ADEG*

Secondary References	Claim Elements
Fibre channel storage ...	ABCDFG
6,055,603	ABCFG
5,848,251	BCDFG

Primary Reference: 4,897,874 *Claim Elements: AEFG*

Secondary References	Claim Elements
Fibre channel storage ...	ABCDFG

Oracle-Huawei-NetApp Ex. 1024, pg. 2354

6,219,771	ABCDEG
5,848,251	BCDFG
5,748,924	BCDG
5,396,596	ABCDG

Primary Reference: 4,807,180 *Claim Elements: AE*

Secondary References	Claim Elements
Fibre channel storage …	ABCDFG
5,848,251	BCDFG

Primary Reference: 4,787,028 *Claim Elements: AE*

Secondary References	Claim Elements
Fibre channel storage …	ABCDFG
5,848,251	BCDFG

Primary Reference: 4,697,232 *Claim Elements: AE*

Secondary References	Claim Elements
Fibre channel storage …	ABCDFG
5,848,251	BCDFG

Primary Reference: 4,455,605 *Claim Elements: E*

Secondary References	Claim Elements
Fibre channel storage …	ABCDFG

Oracle-Huawei-NetApp Ex. 1024, pg. 2355

US005941972A

United States Patent [19]

Hoese et al. COPY FOR SCANNING

[11] Patent Number: 5,941,972

[45] Date of Patent: Aug. 24, 1999

[54] STORAGE ROUTER AND METHOD FOR PROVIDING VIRTUAL LOCAL STORAGE

[75] Inventors: Geoffrey B. Hoese, Austin; Jeffry T. Russell, Cibolo, both of Tex.

[73] Assignee: Crossroads Systems, Inc., Austin, Tex.

[21] Appl. No.: 09/001,799

[22] Filed: Dec. 31, 1997

[51] Int. Cl.[6] G06F 13/00

[52] U.S. Cl. 710/129; 710/128; 710/2

[58] Field of Search 710/1–2, 100–101, 710/126–131

[56] References Cited

U.S. PATENT DOCUMENTS

5,748,924	5/1998	Llorens et al.	395/309
5,768,623	6/1998	Judd et al.	395/857
5,809,328	9/1998	Nogales et al.	395/825
5,812,754	9/1998	Lui et al.	395/182.04
5,835,496	1/1998	Yeung et al.	370/514
5,848,251	12/1998	Lomelino et al.	395/309

Primary Examiner—Christopher B. Shin

Attorney, Agent, or Firm—Gray Cary Ware & Freidenrich, LLP

[57] ABSTRACT

A storage router (56) and storage network (50) provide virtual local storage on remote SCSI storage devices (60, 62, 64) to Fiber Channel devices. A plurality of Fiber Channel devices, such as workstations (58), are connected to a Fiber Channel transport medium (52), and a plurality of SCSI storage devices (60, 62, 64) are connected to a SCSI bus transport medium (54). The storage router (56) interfaces between the Fiber Channel transport medium (52) and the SCSI bus transport medium (54). The storage router (56) maps between the workstations (58) and the SCSI storage devices (60, 62, 64) and implements access controls for storage space on the SCSI storage devices (60, 62, 64). The storage router (56) then allows access from the workstations (58) to the SCSI storage devices (60, 62, 64) using native low level, block protocol in accordance with the mapping and the access controls.

14 Claims, 2 Drawing Sheets

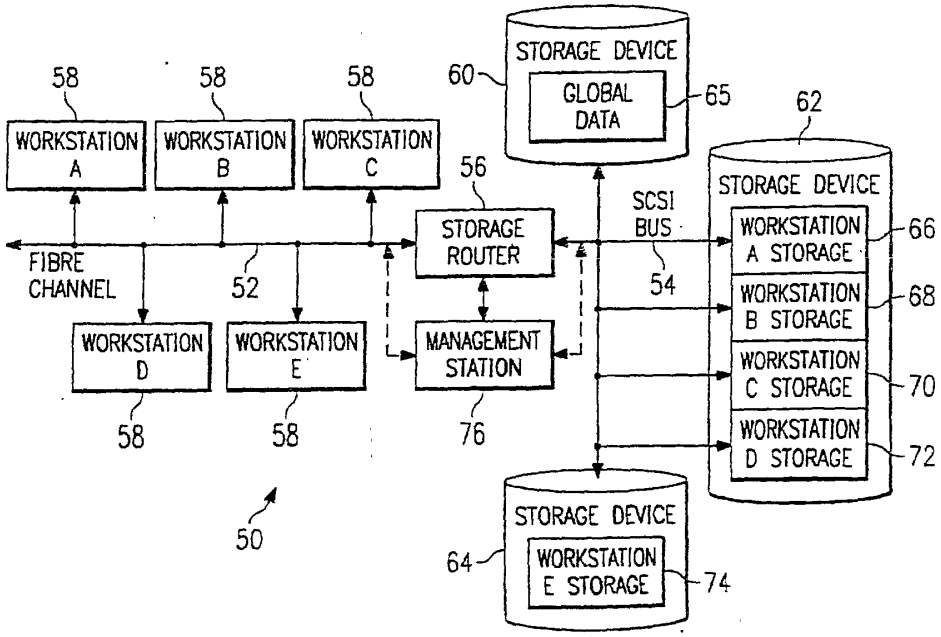

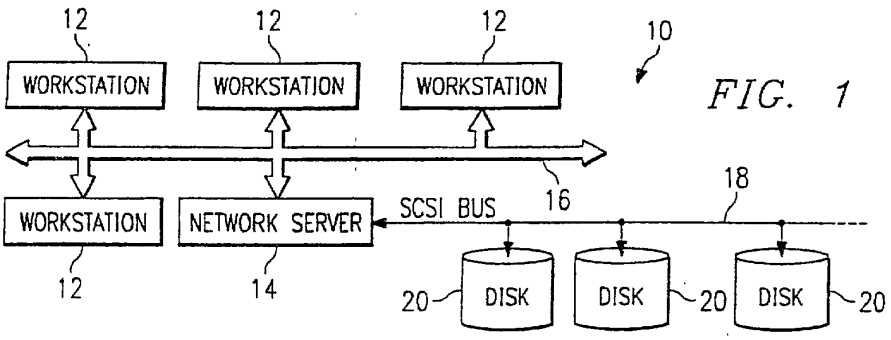

FIG. 1

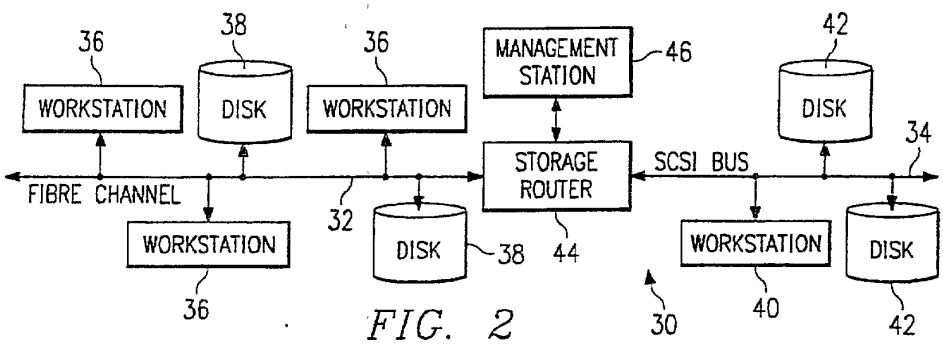

FIG. 2

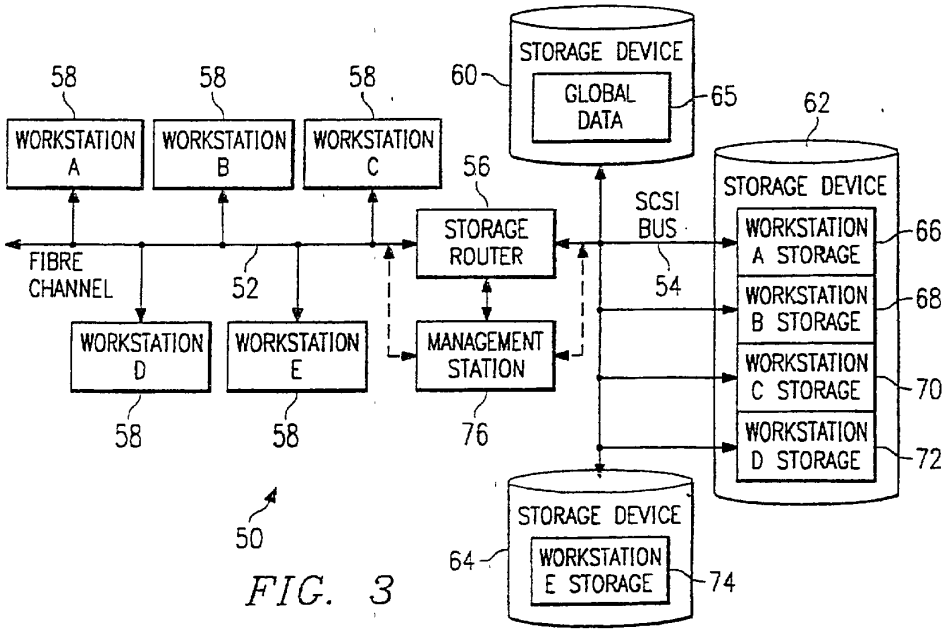

FIG. 3

Oracle-Huawei-NetApp Ex. 1024, pg. 2357

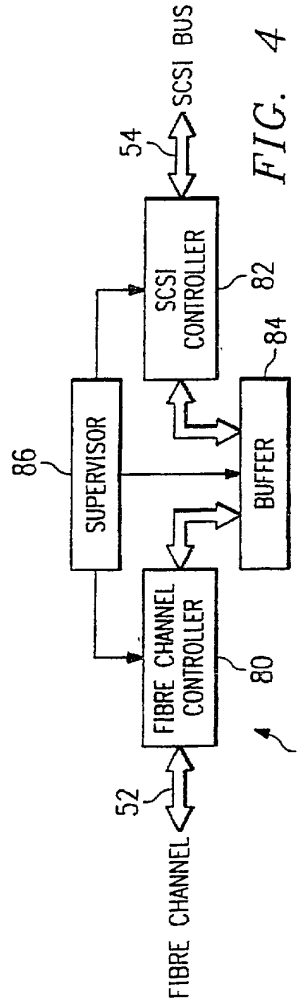

FIG. 4

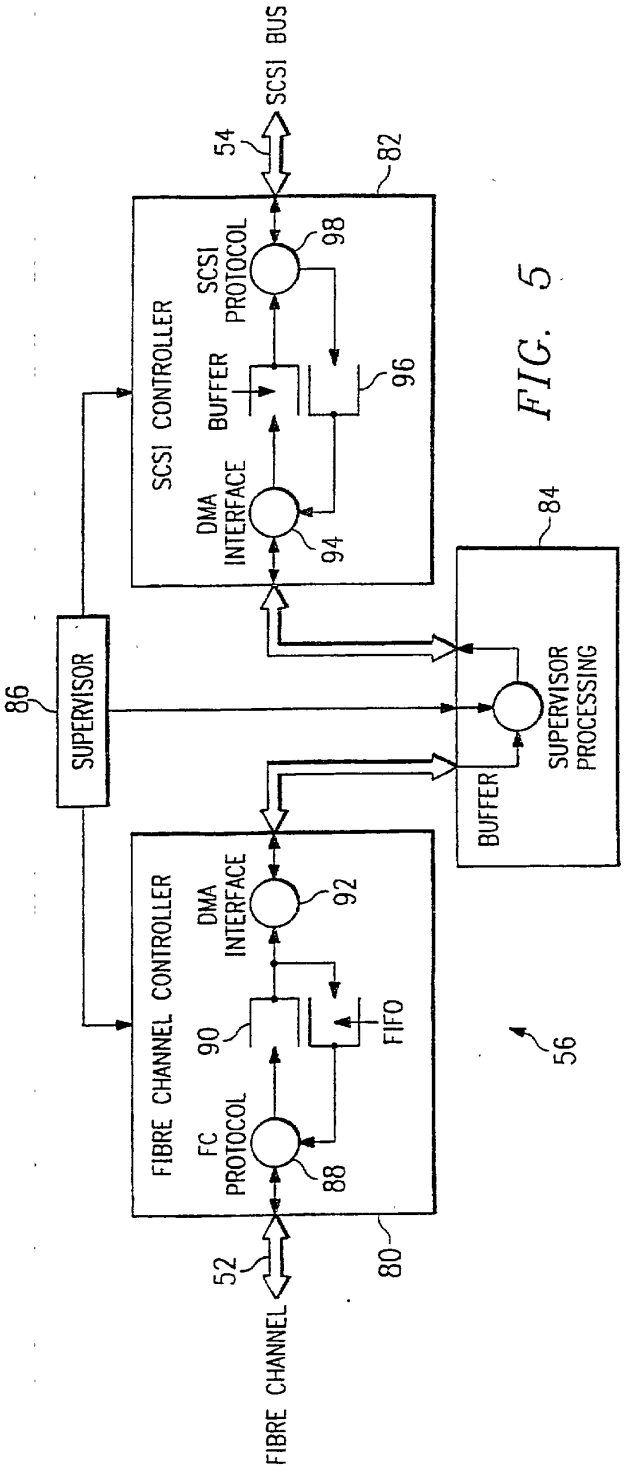

FIG. 5

Oracle-Huawei-NetApp Ex. 1024, pg. 2358

STORAGE ROUTER AND METHOD FOR PROVIDING VIRTUAL LOCAL STORAGE

TECHNICAL FIELD OF THE INVENTION

This invention relates in general to network storage devices, and more particularly to a storage router and method for providing virtual local storage on remote SCSI storage devices to Fibre Channel devices.

BACKGROUND OF THE INVENTION

Typical storage transport mediums provide for a relatively small number of devices to be attached over relatively short distances. One such transport medium is a Small Computer System Interface (SCSI) protocol, the structure and operation of which is generally well known as is described, for example, in the SCSI-1, SCSI-2 and SCSI-3 specifications. High speed serial interconnects provide enhanced capability to attach a large number of high speed devices to a common storage transport medium over large distances. One such serial interconnect is Fibre Channel, the structure and operation of which is described, for example, in *Fibre Channel Physical and Signaling Interface* (FC-PH), ANSI X3.230 *Fibre Channel Arbitrated Loop* (FC-AL), and ANSI X3.272 *Fibre Channel Private Loop Direct Attach* (FC-PLDA).

Conventional computing devices, such as computer workstations, generally access storage locally or through network interconnects. Local storage typically consists of a disk drive, tape drive, CD-ROM drive or other storage device contained within, or locally connected to the workstation. The workstation provides a file system structure, that includes security controls, with access to the local storage device through native low level, block protocols. These protocols map directly to the mechanisms used by the storage device and consist of data requests without security controls. Network interconnects typically provide access for a large number of computing devices to data storage on a remote network server. The remote network server provides file system structure, access control, and other miscellaneous capabilities that include the network interface. Access to data through the network server is through network protocols that the server must translate into low level requests to the storage device. A workstation with access to the server storage must translate its file system protocols into network protocols that are used to communicate with the server. Consequently, from the perspective of a workstation, or other computing device, seeking to access such server data, the access is much slower than access to data on a local storage device.

SUMMARY OF THE INVENTION

In accordance with the present invention, a storage router and method for providing virtual local storage on remote SCSI storage devices to Fibre Channel devices are disclosed that provide advantages over conventional network storage devices and methods.

According to one aspect of the present invention, a storage router and storage network provide virtual local storage on remote SCSI storage devices to Fibre Channel devices. A plurality of Fibre Channel devices, such as workstations, are connected to a Fibre Channel transport medium, and a plurality of SCSI storage devices are connected to a SCSI bus transport medium. The storage router interfaces between the Fibre Channel transport medium and the SCSI bus transport medium. The storage router maps between the workstations and the SCSI storage devices and implements access controls for storage space on the SCSI storage devices. The storage router then allows access from the workstations to the SCSI storage devices using native low level, block protocol in accordance with the mapping and the access controls.

According to another aspect of the present invention, virtual local storage on remote SCSI storage devices is provided to Fibre Channel devices. A Fibre Channel transport medium and a SCSI bus transport medium are interfaced with. A configuration is maintained for SCSI storage devices connected to the SCSI bus transport medium. The configuration maps between Fibre Channel devices and the SCSI storage devices and implements access controls for storage space on the SCSI storage devices. Access is then allowed from Fibre Channel initiator devices to SCSI storage devices using native low level, block protocol in accordance with the configuration.

A technical advantage of the present invention is the ability to centralize local storage for networked workstations without any cost of speed or overhead. Each workstation access its virtual local storage as if it work locally connected. Further, the centralized storage devices can be located in a significantly remote position even in excess of ten kilometers as defined by Fibre Channel standards.

Another technical advantage of the present invention is the ability to centrally control and administer storage space for connected users without limiting the speed with which the users can access local data. In addition, global access to data, backups, virus scanning and redundancy can be more easily accomplished by centrally located storage devices.

A further technical advantage of the present invention is providing support for SCSI storage devices as local storage for Fibre Channel hosts. In addition, the present invention helps to provide extended capabilities for Fibre Channel and for management of storage subsystems.

BRIEF DESCRIPTION OF THE DRAWINGS

A more complete understanding of the present invention and the advantages thereof may be acquired by referring to the following description taken in conjunction with the accompanying drawings, in which like reference numbers indicate like features, and wherein:

FIG. 1 is a block diagram of a conventional network that provides storage through a network server;

FIG. 2 is a block diagram of one embodiment of a storage network with a storage router that provides global access and routing;

FIG. 3 is a block diagram of one embodiment of a storage network with a storage router that provides virtual local storage;

FIG. 4 is a block diagram of one embodiment of the storage router of FIG. 3; and

FIG. 5 is a block diagram of one embodiment of data flow within the storage router of FIG. 4.

DETAILED DESCRIPTION OF THE INVENTION

FIG. 1 is a block diagram of a conventional network, indicated generally at **10**, that provides access to storage through a network server. As shown, network **10** includes a plurality of workstations **12** interconnected with a network server **14** via a network transport medium **16**. Each workstation **12** can generally comprise a processor, memory, input/output devices, storage devices and a network adapter as well as other common computer components. Network

Oracle-Huawei-NetApp Ex. 1024, pg. 2359

server 14 uses a SCSI bus 18 as a storage transport medium to interconnect with a plurality of storage devices 20 (tape drives, disk drives, etc.). In the embodiment of FIG. 1, network transport medium 16 is an network connection and storage devices 20 comprise hard disk drives, although there are numerous alternate transport mediums and storage devices.

In network 10, each workstation 12 has access to its local storage device as well as network access to data on storage devices 20. The access to a local storage device is typically through native low level, block protocols. On the other hand, access by a workstation 12 to storage devices 20 requires the participation of network server 14 which implements a file system and transfers data to workstations 12 only through high level file system protocols. Only network server 14 communicates with storage devices 20 via native low level, block protocols. Consequently, the network access by workstations 12 through network server 14 is slow with respect to their access to local storage. In network 10, it can Also be a logistical problem to centrally manage and administer local data distributed across an organization, including accomplishing tasks such as backups, virus scanning and redundancy.

FIG. 2 is a block diagram of one embodiment of a storage network, indicated generally at 30, with a storage router that provides global access and routing. This environment is significantly different from that of FIG. 1 in that there is no network server involved. In FIG. 2, a Fibre Channel high speed serial transport 32 interconnects a plurality of workstations 36 and storage devices 38. A SCSI bus storage transport medium interconnects workstations 40 and storage devices 42. A storage router 44 then serves to interconnect these mediums and provide devices on either medium global, transparent access to devices on the other medium. Storage router 44 routes requests from initiator devices on one medium to target devices on the other medium and routes data between the target and the initiator. Storage router 44 can allow initiators and targets to be on either side. In this manner, storage router 44 enhances the functionality of Fibre Channel 32 by providing access, for example, to legacy SCSI storage devices on SCSI bus 34. In the embodiment of FIG. 2, the operation of storage router 44 can be managed by a management station 46 connected to the storage router via a direct serial connection.

In storage network 30, any workstation 36 or workstation 40 can access any storage device 38 or storage device 42 through native low level, block protocols, and vice versa. This functionality is enabled by storage router 44 which routes requests and data as a generic transport between Fibre Channel 32 and SCSI bus 34. Storage router 44 uses tables to map devices from one medium to the other and distributes requests and data across Fibre Channel 32 and SCSI bus 34 without any security access controls. Although this extension of the high speed serial interconnect provided by Fibre Channel 32 is beneficial, it is desirable to provide security controls in addition to extended access to storage devices through a native low level, block protocol.

FIG. 3 is a block diagram of one embodiment of a storage network, indicated generally at 50, with a storage router that provides virtual local storage. Similar to that of FIG. 2, storage network 50 includes a Fibre Channel high speed serial interconnect 52 and a SCSI bus 54 bridged by a storage router 56. Storage router 56 of FIG. 3 provides for a large number of workstations 58 to be interconnected on a common storage transport and to access common storage devices 60, 62 and 64 through native low level, block protocols.

According to the present invention, storage router 56 has enhanced functionality to implement security controls and routing such that each workstation 58 can have access to a specific subset of the overall data stored in storage devices 60, 62 and 64. This specific subset of data has the appearance and characteristics of local storage and is referred to herein as virtual local storage. Storage router 56 allows the configuration and modification of the storage allocated to each attached workstation 58 through the use of mapping tables or other mapping techniques.

As shown in FIG. 3, for example, storage device 60 can be configured to provide global data 65 which can be accessed by all workstations 58. Storage device 62 can be configured to provide partitioned subsets 66, 68, 70 and 72, where each partition is allocated to one of the workstations 58 (workstations A, B, C and D). These subsets 66, 68, 70 and 72 can only be accessed by the associated workstation 58 and appear to the associated workstation 58 as local storage accessed using native low level, block protocols. Similarly, storage device 64 can be allocated as storage for the remaining workstation 58 (workstation E).

Storage router 56 combines access control with routing such that each workstation 58 has controlled access to only the specified partition of storage device 62 which forms virtual local storage for the workstation 58. This access control allows security control for the specified data partitions. Storage router 56 allows this allocation of storage devices 60, 62 and 64 to be managed by a management station 76. Management station 76 can connect directly to storage router 56 via a direct connection or, alternately, can interface with storage router 56 through either Fibre Channel 52 or SCSI bus 54. In the latter case, management station 76 can be a workstation or other computing device with special rights such that storage router 56 allows access to mapping tables and shows storage devices 60, 62 and 64 as they exist physically rather than as they have been allocated.

The environment of FIG. 3 extends the concept of a single workstation having locally connected storage devices to a storage network 50 in which workstations 58 are provided virtual local storage in a manner transparent to workstations 58. Storage router 56 provides centralized control of what each workstation 58 sees as its local drive, as well as what data it sees as global data accessible by other workstations 58. Consequently, the storage space considered by the workstation 58 to be its local storage is actually a partition (i.e., logical storage definition) of a physically remote storage device 60, 62 or 64 connected through storage router 56. This means that similar requests from workstations 58 for access to their local storage devices produce different accesses to the storage space on storage devices 60, 62 and 64. Further, no access from a workstation 58 is allowed to the virtual local storage of another workstation 58.

The collective storage provided by storage devices 60, 62 and 64 can have blocks allocated by programming means within storage router 56. To accomplish this function, storage router 56 can include routing tables and security controls that define storage allocation for each workstation 58. The advantages provided by implementing virtual local storage in centralized storage devices include the ability to do collective backups and other collective administrative functions more easily. This is accomplished without limiting the performance of workstations 58 because storage access involves native low level, block protocols and does not involve the overhead of high level protocols and file systems required by network servers.

FIG 4 is a block diagram of one embodiment of storage router 56 of FIG. 3. Storage router 56 can comprise a Fibre

Oracle-Huawei-NetApp Ex. 1024, pg. 2360

Channel controller **80** that interfaces with Fibre Channel **52** and a SCSI controller **82** that interfaces with SCSI bus **54**. A buffer **84** provides memory work space and is connected to both Fibre Channel controller **80** and to SCSI controller **82**. A supervisor unit **86** is connected to Fibre Channel controller **80**, SCSI controller **82** and buffer **84**. Supervisor unit **86** comprises a microprocessor for controlling operation of storage router **56** and to handle mapping and security access for requests between Fibre Channel **52** and SCSI bus **54**.

FIG. **5** is a block diagram of one embodiment of data flow within storage router **56** of FIG. **4**. As shown, data from Fibre Channel **52** is processed by a Fibre Channel (FC) protocol unit **88** and placed in a FIFO queue **90**. A direct memory access (DMA) interface **92** then takes data out of FIFO queue **90** and places it in buffer **84**. Supervisor unit **86** processes the data in buffer **84** as represented by supervisor processing **93**. This processing involves mapping between Fibre Channel **52** and SCSI bus **54** and applying access controls and routing functions. A DMA interface **94** then pulls data from buffer **84** and places it into a buffer **96**. A SCSI protocol unit **98** pulls data from buffer **96** and communicates the data on SCSI bus **54**. Data flow in the reverse direction, from SCSI bus **54** to Fibre Channel **52**, is accomplished in a reverse manner.

The storage router of the present invention is a bridge device that connects a Fibre Channel link directly to a SCSI bus and enables the exchange of SCSI command set information between application clients on SCSI bus devices and the Fibre Channel links. Further, the storage router applies access controls such that virtual local storage can be established in remote SCSI storage devices for workstations on the Fibre Channel link. In one embodiment, the storage router provides a connection for Fibre Channel links running the SCSI Fibre Channel Protocol (FCP) to legacy SCSI devices attached to a SCSI bus. The Fibre Channel topology is typically an Arbitrated Loop (FC_AL).

In part, the storage router enables a migration path to Fibre Channel based, serial SCSI networks by providing connectivity for legacy SCSI bus devices. The storage router can be attached to a Fibre Channel Arbitrated Loop and a SCSI bus to support a number of SCSI devices. Using configuration settings, the storage router can make the SCSI bus devices available on the Fibre Channel network as FCP logical units. Once the configuration is defined, operation of the storage router is transparent to application clients. In this manner, the storage router can form an integral part of the migration to new Fibre Channel based networks while providing a means to continue using legacy SCSI devices.

In one implementation (not shown), the storage router can be a rack mount or free standing device with an internal power supply. The storage router can have a Fibre Channel and SCSI port, and a standard, detachable power cord can be used, the FC connector can be a copper DB9 connector, and the SCSI connector can be a 68-pin type. Additional modular jacks can be provided for a serial port and a 802.3 10BaseT port, i.e. twisted pair Ethernet, for management access. The SCSI port of the storage router an support SCSI direct and sequential access target devices and can support SCSI initiators, as well. The Fibre Channel port can interface to SCSI-3 FCP enabled devices and initiators.

To accomplish its functionality, one implementation of the storage router uses: a Fibre Channel interface based on the HEWLETT-PACKARD TACHYON HPFC-5000 controller and a GLM media interface; an Intel 80960RP processor, incorporating independent data and program memory spaces, and associated logic required to implement a stand alone processing system; and a serial port for debug and system configuration. Further, this implementation includes a SCSI interface supporting Fast-20 based on the SYMBIOS 53C8xx series SCSI controllers, and an operating system based upon the WIND RIVERS SYSTEMS VXWORKS or IXWORKS kernel, as determined by design. In addition, the storage router includes software as required to control basic functions of the various elements, and to provide appropriate translations between the FC and SCSI protocols.

The storage router has various modes of operation that are possible between FC and SCSI target and initiator combinations. These modes are: FC Initiator to SCSI Target; SCSI Initiator to FC Target; SCSI Initiator to SCSI Target; and FC Initiator to FC Target. The first two modes can be supported concurrently in a single storage router device are discussed briefly below. The third mode can involve two storage router devices back to back and can serve primarily as a device to extend the physical distance beyond that possible via a direct SCSI connection. The last mode can be used to carry FC protocols encapsulated on other transmission technologies (e.g. ATM, SONET), or to act as a bridge between two FC loops (e.g. as a two port fabric).

The FC Initiator to SCSI Target mode provides for the basic configuration of a server using Fibre Channel to communicate with SCSI targets. This mode requires that a host system have an FC attached device and associated device drivers and software to generate SCSI-3 FCP requests. This system acts as an initiator using the storage router to communicate with SCSI target devices. The SCSI devices supported can include SCSI-2 compliant direct or sequential access (disk or tape) devices. The storage router serves to translate command and status information and transfer data between SCSI-3 FCP and SCSI-2, allowing the use of standard SCSI-2 devices in a Fibre Channel environment.

The SCSI Initiator to FC Target mode provides for the configuration of a server using SCSI-2 to communicate with Fibre Channel targets. This mode requires that a host system has a SCSI-2 interface and driver software to control SCSI-2 target devices. The storage router will connect to the SCSI-2 bus and respond as a target to multiple target IDs. Configuration information is required to identify the target IDs to which the bridge will respond on the SCSI-2 bus. The storage router then translates the SCSI-2 requests to SCSI-3 FCP requests, allowing the use of FC devices with a SCSI host system. This will also allow features such as a tape device acting as an initiator on the SCSI bus to provide full support for this type of SCSI device.

In general, user configuration of the storage router will be needed to support various functional modes of operation. Configuration can be modified, for example, through a serial port or through an Ethernet port via SNMP (simple network management protocol) or a Telnet session. Specifically, SNMP manageability can be provided via an 802.3 Ethernet interface. This can provide for configuration changes as well as providing statistics and error information. Configuration can also be performed via TELNET or RS-232 interfaces with menu driven command interfaces. Configuration information can be stored in a segment of flash memory and can be retained across resets and power off cycles. Password protection can also be provided.

In the first two modes of operation, addressing information is needed to map from FC addressing to SCSI addressing and vice versa. This can be 'hard' configuration data, due

Oracle-Huawei-NetApp Ex. 1024, pg. 2361

to the need for address information to be maintained across initialization and partial reconfigurations of the Fibre Channel address space. In an arbitrated loop configuration, user configured addresses will be needed for AL_PAs in order to insure that known addresses are provided between loop reconfigurations.

With respect to addressing, FCP and SCSI 2 systems employ different methods of addressing target devices. Additionally, the inclusion of a storage router means that a method of translating device IDs needs to be implemented. In addition, the storage router can respond to commands without passing the commands through to the opposite interface. This can be implemented to allow all generic FCP and SCSI commands to pass through the storage router to address attached devices, but allow for configuration and diagnostics to be performed directly on the storage router through the FC and SCSI interfaces.

Management commands are those intended to be processed by the storage router controller directly. This may include diagnostic, mode, and log commands as well as other vendor-specific commands. These commands can be received and processed by both the FCP and SCSI interfaces, but are not typically bridged to the opposite interface. These commands may also have side effects on the operation of the storage router, and cause other storage router operations to change or terminate.

A primary method of addressing management commands though the FCP and SCSI interfaces can be through peripheral device type addressing. For example, the storage router can respond to all operations addressed to logical unit (LUN) zero as a controller device. Commands that the storage router will support can include INQUIRY as well as vendor-specific management commands. These are to be generally consistent with SCC standard commands.

The SCSI bus is capable of establishing bus connections between targets. These targets may internally address logical units. Thus, the prioritized addressing scheme used by SCSI subsystems can be represented as follows: BUS:TARGET:LOGICAL UNIT. The BUS identification is intrinsic in the configuration, as a SCSI initiator is attached to only one bus. Target addressing is handled by bus arbitration from information provided to the arbitrating device. Target addresses are assigned to SCSI devices directly, though some means of configuration, such as a hardware jumper, switch setting, or device specific software configuration. As such, the SCSI protocol provides only logical unit addressing within the Identify message. Bus and target information is implied by the established connection.

Fibre Channel devices within a fabric are addressed by a unique port identifier. This identifier is assigned to a port during certain well-defined states of the FC protocol. Individual ports are allowed to arbitrate for a known, user defined address. If such an address is not provided, or if arbitration for a particular user address fails, the port is assigned a unique address by the FC protocol. This address is generally not guaranteed to be unique between instances. Various scenarios exist where the AL-PA of a device will change, either after power cycle or loop reconfiguration.

The FC protocol also provides a logical unit address field within command structures to provide addressing to devices internal to a port. The FCP_CMD payload specifies an eight byte LUN field. Subsequent identification of the exchange between devices is provided by the FQXID (Fully Qualified Exchange ID).

FC ports can be required to have specific addresses assigned. Although basic functionality is not dependent on this, changes in the loop configuration could result in disk targets changing identifiers with the potential risk of data corruption or loss. This configuration can be straightforward, and can consist of providing the device a loop-unique ID (AL_PA) in the range of "01h" to "EFh." Storage routers could be shipped with a default value with the assumption that most configurations will be using single storage routers and no other devices requesting the present ID. This would provide a minimum amount of initial configuration to the system administrator. Alternately, storage routers could be defaulted to assume any address so that configurations requiring multiple storage routers on a loop would not require that the administrator assign a unique ID to the additional storage routers.

Address translation is needed where commands are issued in the cases FC Initiator to SCSI Target and SCSI Initiator to FC Target. Target responses are qualified by the FQXID and will retain the translation acquired at the beginning of the exchange. This prevents configuration changes occurring during the course of execution of a command from causing data or state information to be inadvertently misdirected. Configuration can be required in cases of SCSI Initiator to FC Target, as discovery may not effectively allow for FCP targets to consistently be found. This is due to an FC arbitrated loop supporting addressing of a larger number of devices than a SCSI bus and the possibility of FC devices changing their AL-PA due to device insertion or other loop initialization.

In the direct method, the translation to BUS:TARGET:LUN of the SCSI address information will be direct. That is, the values represented in the FCP LUN field will directly map to the values in effect on the SCSI bus. This provides a clean translation and does not require SCSI bus discovery. It also allows devices to be dynamically added to the SCSI bus without modifying the address map. It may not allow for complete discovery by FCP initiator devices, as gaps between device addresses may halt the discovery process. Legacy SCSI device drivers typically halt discovery on a target device at the first unoccupied LUN, and proceed to the next target. This would lead to some devices not being discovered. However, this allows for hot plugged devices and other changes to the loop addressing.

In the ordered method, ordered translation requires that the storage router perform discovery on reset, and collapses the addresses on the SCSI bus to sequential FCP LUN values. Thus, the FCP LUN values 0–N can represent N+1 SCSI devices, regardless of SCSI address values, in the order in which they are isolated during the SCSI discovery process. This would allow the FCP initiator discovery process to identify all mapped SCSI devices without further configuration. This has the limitation that hot-plugged devices will not be identified until the next reset cycle. In this case, the address may also be altered as well.

In addition to addressing, according to the present invention, the storage router provides configuration and access controls that cause certain requests from FC Initiators to be directed to assigned virtual local storage partitioned on SCSI storage devices. For example, the same request for LUN 0 (local storage) by two different FC Initiators can be directed to two separate subsets of storage. The storage router can use tables to map, for each initiator, what storage access is available and what partition is being addressed by a particular request. In this manner, the storage space provided by SCSI storage devices can be allocated to FC initiators to provide virtual local storage as well as to create any other desired configuration for secured access.

Although the present invention has been described in detail, it should be understood that various changes,

EXHIBIT 2002 Petitioner Oracle-Huawei-NetApp

substitutions, and alterations can be made hereto without departing from the spirit and scope of the invention as defined by the appended claims.

What is claimed is:

1. A storage router for providing virtual local storage on remote SCSI storage devices to Fibre Channel devices, comprising:

a buffer providing memory work space for the storage router;

a Fibre Channel controller operable to connect to and interface with a Fibre Channel transport medium;

a SCSI controller operable to connect to and interface with a SCSI bus transport medium; and

a supervisor unit coupled to the Fibre Channel controller, the SCSI controller and the buffer, the supervisor unit operable:

to maintain a configuration for SCSI storage devices connected to the SCSI bus transport medium that maps between Fibre Channel devices and SCSI storage devices and that implements access controls for storage space on the SCSI storage devices; and

to process data in the buffer to interface between the Fibre Channel controller and the SCSI controller to allow access from Fibre Channel initiator devices to SCSI storage devices using native low level, block protocol in accordance with the configuration.

2. The storage router of claim 1, wherein the configuration maintained by the supervisor unit includes an allocation of subsets of storage space to associated Fibre Channel devices, wherein each subset is only accessible by the associated Fibre Channel device.

3. The storage router of claim 2, wherein the Fibre Channel devices comprise workstations.

4. The storage router of claim 2, wherein the SCSI storage devices comprise hard disk drives.

5. The storage router of claim 1, wherein the Fibre Channel controller comprises:

a Fibre Channel (FC) protocol unit operable to connect to the Fibre Channel transport medium;

a first-in-first-out queue coupled to the Fibre Channel protocol unit; and

a direct memory access (DMA) interface coupled to the first-in-first-out queue and to the buffer.

6. The storage router of claim 1, wherein the SCSI controller comprises:

a SCSI protocol unit operable to connect to the SCSI bus transport medium;

an internal buffer coupled to the SCSI protocol unit; and

a direct memory access (DMA) interface coupled to the internal buffer and to the buffer of the storage router.

7. A storage network, comprising:

a Fibre Channel transport medium;

a SCSI bus transport medium;

a plurality of workstations connected to the Fibre Channel transport medium;

a plurality of SCSI storage devices connected to the SCSI bus transport medium; and

a storage router interfacing between the Fibre Channel transport medium and the SCSI bus transport medium, the storage router providing virtual local storage on the SCSI storage devices to the workstations and operable:

to map between the workstations and the SCSI storage devices;

to implement access controls for storage space on the SCSI storage devices; and

to allow access from the workstations to the SCSI storage devices using native low level, block protocol in accordance with the mapping and access controls.

8. The storage network of claim 7, wherein the access controls include an allocation of subsets of storage space to associated workstations, wherein each subset is only accessible by the associated workstation.

9. The storage network of claim 7, wherein the SCSI storage devices comprise hard disk drives.

10. The storage network of claim 7, wherein the storage router comprises:

a buffer providing memory work space for the storage router;

a Fibre Channel controller operable to connect to and interface with a Fibre Channel transport medium, the Fibre Channel controller further operable to pull outgoing data from the buffer and to place incoming data into the buffer;

a SCSI controller operable to connect to and interface with a SCSI bus transport medium, the SCSI controller further operable to pull outgoing data from the buffer and to place incoming data into the buffer; and

a supervisor unit coupled to the Fibre Channel controller, the SCSI controller and the buffer, the supervisor unit operable:

to maintain a configuration for the SCSI storage devices that maps between Fibre Channel devices and SCSI storage devices and that implements the access controls for storage space on the SCSI storage devices; and

to process data in the buffer to interface between the Fibre Channel controller and the SCSI controller to allow access from workstations to SCSI storage devices in accordance with the configuration.

11. A method for providing virtual local storage on remote SCSI storage devices to Fibre Channel devices, comprising:

interfacing with a Fibre Channel transport medium;

interfacing with a SCSI bus transport medium;

maintaining a configuration for SCSI storage devices connected to the SCSI bus transport medium that maps between Fibre Channel devices and the SCSI storage devices and that implements access controls for storage space on the SCSI storage devices; and

allowing access from Fibre Channel initiator devices to SCSI storage devices using native low level, block protocol in accordance with the configuration.

12. The method of claim 11, wherein maintaining the configuration includes allocating subsets of storage space to associated Fibre Channel devices, wherein each subset is only accessible by the associated Fibre Channel device.

13. The method of claim 12, wherein the Fibre Channel devices comprise workstations.

14. The method of claim 12, wherein the SCSI storage devices comprise hard disk drives.

* * * * *

Oracle-Huawei-NetApp Ex. 1024, pg. 2363

FORM PTO—1520 (8-83)

REEXAMINATION

5,941,972

CONTROL NUMBER	CERTIFICATE DATE	CERTIFICATE NUMBER
66548 U.S.P.T.O. 90007123		

07/19/04

CLASS	SUBCLASS	O.I.P.E	ART UNIT	EXAMINER
710	315	SCANNED _____ Q.A. _____	3111	

TITLE OF INVENTION (FOR DESIGN APPLICATION ONLY):

☐ TERMINAL DISCLAIMER	☐ The term of this patent subsequent to _____ (date) has been disclaimed.	☐ The term of this patent shall not extend beyond the expiration date of Pat. No. _____.	☐ The terminal _____ months of this patent have been disclaimed.

ISSUING CLASSIFICATION

ORIGINAL		CROSS REFERENCE(S)	
CLASS	SUBCLASS	CLASS	SUBCLASS (ONE SUBCLASS PER BLOCK)
INTERNATIONAL CLASSIFICATION			

☐ Continued on Issue Slip Inside File Jacket

Form PTO-2009 (Rev. 4-97)

WARNING: The information disclosed herein may be restricted. Unauthorized disclosure may be prohibited by the United States Code Title 35, Sections 122, 181 and 368. Possession outside the U.S. Patent & Trademark Office is restricted to authorized employees and contractors only.

REQUESTER ☐ CORRESPONDENCE ADDRESS: ☐ PATENT OWNER ☐ THIRD PARTY ☒

Natu J. Patel, Esq.
Wang & Patel PC
1301 Dove Street Suite 1050
Newport Beach CA 92660

COPENDING OFFICE PROCEEDINGS		PREPARED FOR CERTIFICATE
TYPE OF PROCEEDING	NUMBER	
1		(Docket Clerk)
2		REEXAMINED AND PASSED FOR CERTIFICATE
3		

FORM PTO—1520 (8-83)

REEXAMINATION

CONTROL NUMBER
66548 U.S. PTO
90007123

07/19/04

CLASS

7/

SEARCH NOTES

	Date	Ex'r

CLAIM NO.

FOR O.G. _____

DRAWING FIG.
FOR CERTIFICATE AND
FOR O.G. _____

LITIGATION REVIEW ☐ _____ _____
(exmr. init.) (date)

CASE NAME	DIRECTOR INITIALS

REEXAMINATION FIELD OF SEARCH

Class	Sub	Date	Ex'r

INDEX OF CLAIMS

Claim Final	Claim Original	Date	Claim Final	Claim Original	Date
	1			26	
	2			27	
	3			28	
	4			29	
	5			30	
	6			31	
	7			32	
	8			33	
	9			34	
	10			35	
	11			36	
	12			37	
	13			38	
	14			39	
	15			40	
	16			41	
	17			42	
	18			43	
	19			44	
	20			45	
	21			46	
	22			47	
	23			48	
	24			49	
	25			50	

SYMBOLS

	STATUS
✓	
=	Rejected
—	Patentable
A	(Through numeral) Canceled
O	Appeal

UNITED STATES PATENT AND TRADEMARK OFFICE

UNITED STATES DEPARTMENT OF COMMERCE
United States Patent and Trademark Office
Address COMMISSIONER FOR PATENTS
P O Box 1450
Alexandria, Virginia 22313-1450
www.uspto.gov

Bib Data Sheet

CONFIRMATION NO. 2293

SERIAL NUMBER	FILING OR 371(c) DATE	CLASS	GROUP ART UNIT	ATTORNEY DOCKET NO.
90/007,123	07/19/2004 RULE	710	2111	I006-8900

APPLICANTS

5941972, Residence Not Provided;
Crossroads Systems, Inc.(Owner), Austin, TX;
Natu J. Patel, Esq.(3rd Pty. Req.), Newport Beach, CA;

**** CONTINUING DATA ***************************

This application is a REX of 09/001,799 12/31/1997 PAT 5,941,972

**** FOREIGN APPLICATIONS *********************

		STATE OR COUNTRY	SHEETS DRAWING	TOTAL CLAIMS	INDEPENDENT CLAIMS
Foreign Priority claimed	☐ yes ☐ no				
35 USC 119 (a-d) conditions met	☐ yes ☐ no ☐ Met after Allowance			14	2
Verified and Acknowledged	Examiner's Signature Initials				

ADDRESS

Gray Cary Ware & Friedenrich LLP
1221 South MoPac Expressway Suite 400
Austin ,TX 78746-6875

TITLE

STORAGE ROUTER AND METHOD FOR PROVIDING VIRTUAL LOCAL STORAGE

FILING FEE RECEIVED		
2520	FEES: Authority has been given in Paper No. _____ to charge/credit DEPOSIT ACCOUNT No. _____ for following:	☐ All Fees ☐ 1.16 Fees (Filing) ☐ 1.17 Fees (Processing Ext. of time) ☐ 1.18 Fees (Issue) ☐ Other _____ ☐ Credit

REEXAMINATION

66548 U.S. PTO
90007123
07/19/04

PATENT APPLICATION

90007123

CONTENTS

Entered

1. REQUEST PAPERS FILED
2. Title Report
3. Notice of Reexam Req. Fil. Dt.
4. " " Assigned Grp.
5.
6.
7.
8.
9.
10.
11.
12.
13.
14.
15.
16.
17.
18.
19.
20.
21.
22.
23.
24.
25.
26.
27.
28.
29.
30.
31.
32.
33.

OIPE JC105 JUL 19 2004 PATENT & TRADEMARK OFFICE

Rexam

PTO/SB/57 (04-04)
Approved for use through 04/30/2007. OMB 0651-0033
U.S. Patent and Trademark Office; U.S. DEPARTMENT OF COMMERCE
Under the Paperwork Reduction Act of 1995, no persons are required to respond to a collection of information unless it displays a valid OMB control number.

(Also referred to as FORM PTO-1465)

REQUEST FOR *EX PARTE* REEXAMINATION TRANSMITTAL FORM

66548 U.S. PTO
90007123

66548 U.S. PTO
07/19/04

07/19/04

Address to:
Mail Stop *Ex Parte* Reexam
Commissioner for Patents
P.O. Box 1450
Alexandria, VA 22313-1450

Attorney Docket No.: I006-8900

Date: July 19, 2004

1. [X] This is a request for *ex parte* reexamination pursuant to 37 CFR 1.510 of patent number _5,941,972_____ issued __August 24, 1999_____. The request is made by:

   [ ] patent owner. [X] third party requester.

2. [X] The name and address of the person requesting reexamination is:

   __Natu J. Patel, Esq., Wang & Patel PC_____

   __1301 Dove Street, Suite 1050_____

   __Newport Beach, CA 92660_____

3. [X] a. A check in the amount of $_2520.00_____ is enclosed to cover the reexamination fee, 37 CFR 1.20(c)(1);

   [ ] b. The Director is hereby authorized to charge the fee as set forth in 37 CFR 1.20(c)(1) to Deposit Account No. _____ (submit duplicate of this form for fee processing); or

   [ ] c. Payment by credit card. Form PTO-2038 is attached.

4. [X] Any refund should be made by [X] check or [ ] credit to Deposit Account No._____. 37 CFR 1.26(c). If payment is made by credit card, refund must be to credit card account.

5. [X] A copy of the patent to be reexamined having a double column format on one side of a separate paper is enclosed. 37 CFR 1.510(b)(4)

6. [ ] CD-ROM or CD-R in duplicate, Computer Program (Appendix) or large table

7. [ ] Nucleotide and/or Amino Acid Sequence Submission
   If applicable, all of the following are necessary.

   a. [ ] Computer Readable Form (CRF)
   b. Specification Sequence Listing on:

      i. [ ] CD-ROM (2 copies) or CD-R (2 copies); **or**
      ii. [ ] paper

   c. [ ] Statements verifying identity of above copies

8. [ ] A copy of any disclaimer, certificate of correction or reexamination certificate issued in the patent is included.

9. [X] Reexamination of claim(s) __1 through 14 (all claims)_____is requested.

10. [X] A copy of every patent or printed publication relied upon is submitted herewith including a listing thereof on Form PTO-1449 or equivalent.

07/22/2004 MTWITTY 00000001 90007123

11. [ ] An English language translation of all necessary and pertinent non-English language patents and/or printed publications is included.

01 FC:1812 2520.00 OP

This collection of information is required by 37 CFR 1.510. The information is required to obtain or retain a benefit by the public which is to file (and by the USPTO to process) an application. Confidentiality is governed by 35 U.S.C. 122 and 37 CFR 1.14. This collection is estimated to take 2 hours to complete, including gathering, preparing, and submitting the completed application form to the USPTO. Time will vary depending upon the individual case. Any comments on the amount of time you require to complete this form and/or suggestions for reducing this burden, should be sent to the Chief Information Officer, U.S. Patent and Trademark Office, U.S. Department of Commerce, P.O. Box 1450, Alexandria, VA 22313-1450. DO NOT SEND FEES OR COMPLETED FORMS TO THIS ADDRESS. **SEND TO: Mail Stop *Ex Parte* Reexam, Commissioner for Patents, P.O. Box 1450, Alexandria, VA 22313-1450.**
If you need assistance in completing the form, call 1-800-PTO-9199 and select option 2.

Oracle-Huawei-NetApp Ex. 1024, pg. 2368

12. [X] The attached detailed request includes at least the following items:

a. A statement identifying each substantial new question of patentability based on prior patents and printed publications. 37 CFR 1.510(b)(1)
b. An identification of every claim for which reexamination is requested, and a detailed explanation of the pertinency and manner of applying the cited art to every claim for which reexamination is requested. 37 CFR 1.510(b)(2)

13. [ ] A proposed amendment is included (only where the patent owner is the requester). 37 CFR 1.510(e)

14. [X] a. It is certified that a copy of this request (if filed by other than the patent owner) has been served in its entirety on the patent owner as provided in 37 CFR 1.33(c).
The name and address of the party served and the date of service are:

_Gray Cary Ware & Freidenrich, LLP, Atn: Tracy McCreight, Esq.,_____

_1221 S. MoPac Expressway, Suite 400_____

_Austin, TX 78746-6875_____

Date of Service: ___July 19, 2004_____; or

[ ] b. A duplicate copy is enclosed since service on patent owner was not possible.

15. Correspondence Address: Direct all communication about the reexamination to:

[X] Customer Number: ***37819***

OR

[ ] Firm or Individual Name					
Address (line 1)					
Address (line 2)					
City		State		Zip	
Country					
Telephone		Fax			

16. [X] The patent is currently the subject of the following concurrent proceeding(s):
[ ] a. Copending reissue Application No. _____.
[ ] b. Copending reexamination Control No. _____.
[ ] c. Copending Interference No. _____.
[X] d. Copending litigation styled:

__Crossroads Systems, Inc. v. Dot Hill Systems Corporation, U.S.D.C. for Western District of Texas,__

__ Case Number A-03-CV-754(SS)_____

WARNING: Information on this form may become public. Credit card information should not be included on this form. Provide credit card information and authorization on PTO-2038.

Authorized Signature	**July 19, 2004** *Date*	
__Natu J. Patel_____ *Typed/Printed Name*	___39559_____ *Registration No., if applicable*	[ ] *For Patent Owner Requester* [X] *For Third Party Requester*

Oracle-Huawei-NetApp Ex. 1024, pg. 2369

IN THE UNITED STATES PATENT AND TRADEMARK OFFICE

Inventor: **Hoese, et al.** **Title of Invention:** **Storage router and method for providing virtual local storage** **Issued:** **August 24, 1999** **Patent No.:** **5,941,972**	:	**REQUEST FOR EX PARTE REEXAMINATION**

Mail Stop Ex Parte Reexam
Commissioner for Patents
P.O. Box 1450
Alexandria, VA 22313-1450

REQUEST FOR EX PARTE REEXAMINATION

Dear Sir:

This is a Request for Ex Parte Reexamination of Claims 1 through 14 of the above identified United States Patent. It is believed that newly discovered prior art submitted herewith, which was not considered by the Patent Office during the prosecution of the above Patent, raises a substantial new question of Patentability with respect to Claims 1 through 14. Accordingly, reexamination under 35 U.S.C. §§ 302-307 pursuant to 37 C.F.R. § 1.510, et seq. is hereby respectfully requested.

In accordance with 37 C.F.R. § 1.510, the following is provided herein:

37 C.F.R. § 1.510(a)	Prior art cited under 37 C.F.R. § 1.501, infra. Fee for ex parte reexamination as per 37 C.F.R. 1.20(c)(1), $2,520.00, included with petition.

Oracle-Huawei-NetApp Ex. 1024, pg. 2370

37 C.F.R. § 1.510(b)(1)	A statement indicating each substantial new question of Patentability based on prior Patents and printed publications, infra.
37 C.F.R. § 1.510(b)(2)	An identification of every claim for which reexamination is requested, and a detailed explanation of the pertinency and manner of applying the cited prior art to every claim for which reexamination is requested, infra.
37 C.F.R. § 1.510(b)(3)	A copy of every Patent or printed publication relied upon or referred to in paragraph (b)(1) and (2) of this section, with listing (Exhibit 1).
37 C.F.R. § 1.510(b)(4)	A copy of the entire Patent including the front face, drawings, and specification/claims (in double column format) for which reexamination is requested, and a copy of any disclaimer, certificate of correction, or reexamination certificate issued in the Patent (Exhibit 2).
37 C.F.R. § 1.510(b)(4)	A certification that a copy of the request filed by a person other than the Patent owner has been served in its entirety on the Patent owner at the address as provided for in § 1.33(c). The name and address of the party served must be indicated (Exhibit 3).

Attorney Docket No.

Oracle-Huawei-NetApp Ex. 1024, pg. 2371

I. INTRODUCTION

This request is based upon numerous prior patents and printed publications, including 77 U.S. Patents and 6 printed articles, most of which were not previously considered by the Patent Office in granting the above-referenced patent. It is believed that Claims 1 through 14 of U.S. Patent No. 5,941,972 (the '972 Patent) are invalid:

1) pursuant to 35 U.S.C. §102 as being anticipated by the Maxstrat GEN5 controller product;
2) under 35 U.S.C. §103 as being obvious;
   i) in light of the patentees' deposition and trial testimony that the invention amounts to nothing more than simply adding "access controls" to a prior art storage router and such a simple modification was obvious in light of a number of patents, products and motivations to make such a combination; and
   ii) because motivations to combine the prior art inevitably would lead one skilled in the art to arrive at the alleged invention embodied in the '972 Patent.

This request is served concurrently with a request for reexamination of U.S. Patent Nos. 6,421,753 (the '753 Patent), 6,425,035 (the '035 Patent), 6,425,036 (the '036 Patent), and 6,738,854 (the '854 Patent), collectively referred to as the "Related Patents." The '972 Patent was the parent of the Related Patents.

II. BACKGROUND

The invention described and claimed in the '972 Patent is currently assigned to Crossroads Systems (Texas), Inc. ("Crossroads").

The '972 Patent was the parent of the Related Patents, and all five Patent specifications have identical figures and nearly identical written descriptions - the only differences can be found in the claims, and even those differences are minimal. A chart

Oracle-Huawei-NetApp Ex. 1024, pg. 2372

depicting the differences in the claims of the '972, '036, '035 and '854 Patents is included herein (Exhibit 4).

The '972 and '035 Patents are currently being litigated in the case of Crossroads Systems, Inc. v. Dot Hill Systems Corporation, Western District of Texas, Case Number A-03-CV-754(SS) ("*Crossroads v. Dot Hill*"). On June 26, 2004, Dot Hill submitted a Motion for Summary Judgment ("MSJ") to the Court, a copy of which is included herein. (Exhibit 5). The Motion requests a finding of invalidity based upon: 1) the '035 Patent being anticipated by, or rendered obvious in light of, prior art; and 2) the '972 Patent being obvious in light of prior art.

Specifically, the MSJ argument is based partially upon undisputed prior art in the form of the HSZ70 array controller designed and manufactured by Digital Equipment Corporation ("DEC") and related, published product manuals. Further, the MSJ contains three declarations from former DEC employees who were involved in the design and manufacture of the HSZ70 that clearly establish the date of conception, use, and publication of the manuals of the DEC HSZ70 as long before the earliest alleged conception dates for the '035 and '972 Patents. (See Exhibit 5).

The HSZ70 product was on sale before the issuance of the '972 and Related Patents, yet the Patentees did not disclose this relevant prior art to the USPTO during the examination of the Patents. (See Exhibit 5). Even worse, Dot Hill's previous counsel gave to Crossroads' patent counsel copies of the HSZ70 manuals prior to the issuance of the '854 Patent, and yet the Patentees still did not disclose this relevant prior art to the USPTO during the examination of that patent. Dot Hill earnestly encourages the examiner to review the attached copy of the MSJ and corresponding declarations, which have been filed with the Court, to evaluate the impact of the DEC HSZ70 product literature on the portfolio of Related Patents. (See Exhibit 5).

Further, inventors Hoese and Russell have at least six (6) pending applications that are continuations claiming priority based upon the '972 patent application filing date.

Oracle-Huawei-NetApp Ex. 1024, pg. 2373

The Application Numbers of the pending applications are 10/023786, 10/081082, 10/081110, 10/081114, 10/361283 and 10/658163. As each of these applications depends upon the '972 patent application, Dot Hill contends that each application suffers from the same critical infirmity as the '972 patent. Dot Hill cannot pursue reexamination of the pending applications; nevertheless, Dot Hill respectfully requests that these applications and any other pending applications depending on the '972 Patent or any Related Patent be examined in light of this reexamination petition and the petitions for the Related Patents.

III. PRIOR LITIGATION INVOLVING THE '972 PATENT

This is a unique case that presents the examiner with a wealth of information to assist in the reexamination.

The '972 Patent was litigated on two separate occasions and the Court has defined terms in the '972 Patent as a result of a Markman Order in the case of *Crossroads Systems, (Texas), Inc. v. Chaparral Network Storage, Inc.*, Western District of Texas, Civil Action Number A-00-CA-217-SS ("*Chaparral*"). A copy of the *Chaparral* Court's Markman Order appears in Exhibit 6. (Also *see Crossroads Systems, (Texas), Inc. v. Pathlight Technology, Inc.*, Western District of Texas, Civil Action Number A-00-CA-248-SS). A district court's finding is binding upon the Patent examiner in a reexamination. *Marlow Industries, Inc. v. Igloo Products Corp.*, 2002 WL 485698, *4 - 5 (N.D.Tex.,2002) referring to *In Re Freeman*, 30 F.3d 1459, 1468 (Fed.Cir.1994) see also MPEP §2286. (Exhibit 7).

During the course of the '972 Patent litigation in the *Chaparral* case, the Patentees made a number of admissions under oath at deposition and at trial that have a direct bearing on the current reexamination and the scope of the patents at issue. Pursuant to MPEP §2217, Patentee admissions may be used in combination with Patents and printed publications to establish a substantial new question of Patentability.

Oracle-Huawei-NetApp Ex. 1024, pg. 2374

Admissions are not restricted to just a determination of a substantial new question of Patentability. Under section 305, reexamination proceeds "...according to the procedures established for initial examination." 35 U.S.C.A. § 305, see also *In re Portola Packaging Inc.*, 122 F.3d 1473, 1475 (C.A.Fed.,1997) see also 37 C.F.R. 1.104 (c)(3). "Facts, including admissions which have already been established in the record, have been authorized for use in reexamination proceedings. See 37 CFR 1.106(c) and M.P.E.P. § 2258." *Ex Parte the Successor in Interest of Robert S. McGaughey*, 1988 WL 252480, *4. (Exhibit 8). "In the initial examination of Patent applications, admissions by the applicant are considered for any purpose including evidence of obviousness under section 103." Id. "An admission is defined as an acknowledged, declared, conceded or recognized fact or truth. Thus, admissions are simply facts." Id at *5.

IV. THE SCOPE OF THE INVENTION AS ADMITTED BY AN INVENTOR

During trial and deposition testimony in the *Chaparral* case, one of the two inventors of the '972 and Related Patents stated that the only invention claimed was the movement of access controls from a network server into the router device. Every other limitation in the claims of the '972 Patent, including the router device itself, was admitted to be prior art. *See* trial transcript of inventor Geoffrey Hoese, Exhibit 9, pages 70 to 72. According to the inventor, the novel feature of the claims is that the storage router, rather than a network server, performs access control such that each workstation may have controlled access to a specific partition of the storage device which forms the virtual local storage for that workstation ('972 Patent, column 4, lines 22-25). All other aspects of the alleged invention as set forth in figure 2 of the '972 Patent and the corresponding written description of the '972 patent were acknowledged by the inventor Geoffrey Hoese, in his trial testimony in the *Chaparral* case, to be part of the prior art and not the invention.

Q. Figure – well, figure 2 is not your invention, right, sir?
A. **Figure 2 is not my invention.**
Q. And this description is in reference to figure 2, and this description mentions native low-level block protocols and mentions mapping, and you say figure 2 is not your invention?
A. That's correct.

Oracle-Huawei-NetApp Ex. 1024, pg. 2375

(Trial transcript of Hoese, page 81, starting at line 3, emphasis added)

* * *

See, *In re Nomiya*, 509 F.2d 566, 570-71, 571 n.5, 184 USPQ 607, 611, 611 n.4 (CCPA 1975) ("We see no reason why appellants' representations in their application should not be accepted at face value as admissions that Figs. 1 and 2 may be considered "prior art" for any purpose, including use as evidence of obviousness under § 103. [Citations omitted.] By filing an application containing Figs. 1 and 2, labeled prior art, *ipsissimis verbis*, and statements explanatory thereof, appellants have conceded what is to be considered as prior art in determining obviousness of their improvement.")

V. THE '972 PATENT IS INVALID AS IT IS ANTICIPATED BY THE MAXSTRAT GEN 5 PRODUCT

MaxStrat (previously known as Maximum Strategy) was a company that designed and manufactured RAID (redundant array of independent devices) controllers as well as entire storage systems, beginning in the early 1990s. In 1996, MaxStrat began shipping the GEN5 RAID controller, which was a router that performed the function of access controls and met each and every claim of the '972 Patent. (It should be noted that in the *Chaparral* case, the Court determined that the '972 Patent covered RAID controller devices, as they met the definition of "routers." Further, the devices accused by Crossroads in *Crossroads v. Dot Hill* are RAID controllers, like the GEN5.)

A chart is included in Exhibit 10 comparing elements described in the GEN5 System Guide and GUI User's Guide with each limitation in all claims of the '972 Patent. A copy of the *Gen5 S-SERIES XL System Guide Revision 1.01*, published June 11, 1996 ("System Guide"), is included as Exhibit 11, and a copy of the *Graphical User Interface for MAXSTRAT Gen5/Gen-S Servers User's Guide 1.1*, published January 6, 1997 ("GUI Guide"), is included as Exhibit 12. Both manuals were published before the alleged invention of the '972 Patent.

Oracle-Huawei-NetApp Ex. 1024, pg. 2376

The GUI Guide describes the operation of the Gen5 S-Series Storage Server, which is documented in the System Guide.

> "1.1.2 System Requirements
> The GUI will function on all models of the Gen5 Storage Servers, at Gen5 software revision 1.60 or higher, and all models of the Profile NFS File Server at ProOS revision 0.82 and higher, and all models of the S-Series at software revision 1.00 or higher." [GUI Guide, page 1]

The GUI Guide expressly references the System Guide, which is incorporated by reference:

> "1.1.3 Related Reference Material
> ...
> S-Series System Manual" [GUI Guide, page 2]

The GUI Guide and System Guide are a two-volume set that make a single publication. This printed publication describes each and every limitation of the Claims of the '972 Patent. The pertinency and manner of applying this printed publication to the '972 Patent is explained in the chart included in Exhibit 10, which compares elements of the Gen5 with each limitation in each of the claims of the '972 Patent.

The GEN5 provides a number of devices such as Cray computers on one side of the GEN5 with access to storage devices such as hard disk drives on the other side of the GEN5. An outline of this configuration is shown below.

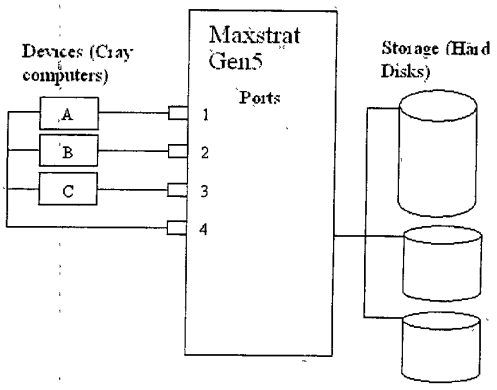

Oracle-Huawei-NetApp Ex. 1024, pg. 2377

As to the "access control" limitation of the '972 Patent, the Gen5 is able to assign a specific storage area to a specific device. The GEN5 includes the "ifp" command, which includes the "luns bitmask enable" field. This field is used to specify the enabling of LUNs on interface ports to provide access to "facilities" (storage units). [See Exhibit 10, Claim chart, pages 5 and 6; see Exhibit 11, Gen5 System Guide, pages 4-42 to 4-43]. For example, each device attached to a GEN5 can be assigned a subset of a disk drive as shown below.

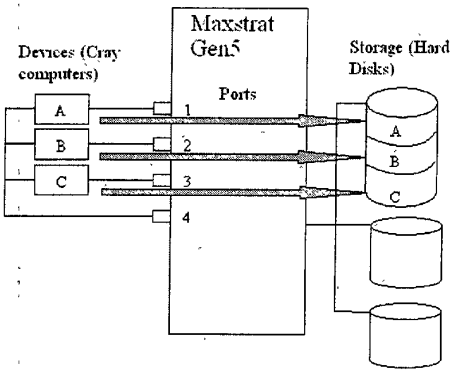

Alternatively, the GEN5 allows for a configuration where all the devices can access a global disk storage, as identified below.

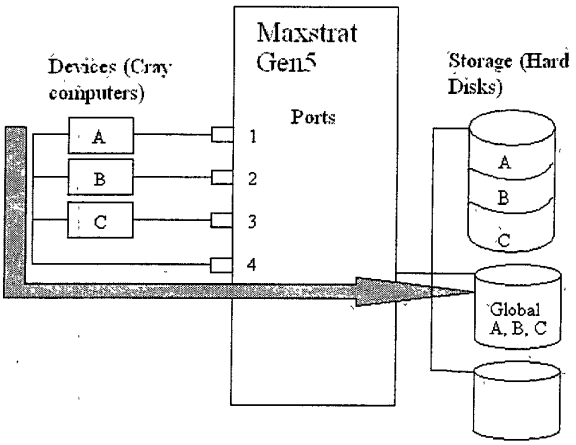

Oracle-Huawei-NetApp Ex. 1024, pg. 2378

Attorney Docket No. 2005-0-1

Finally, the GEN5 can assign a device to a particular drive, again as displayed below.

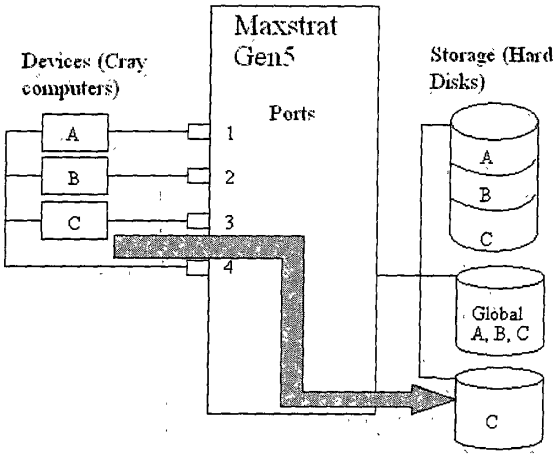

Notably, this last configuration of the GEN5 was quite common and not an unreasonable extension of the product. (See *Hillgrave Corp. v. Symantec Corp.*, 265 F.3d 1336, 1343 (Fed.Cir. 2001) for a discussion of the reasonable use of a product involved in an infringement analysis). Review of the GEN5 documentation attached herein indicates that such a configuration was available. (Exhibit 13).

While GEN5 connected to storage devices using only the SCSI transport medium, Gen5 could be configured to use combinations SCSI, Fibre Channel and/or HIPPI transport media to connect to hosts.

In sum, the GEN5 allows access to a global data storage device, subsets of a single storage device, and access to a single storage device. This allocation of storage is what the Court in *Chaparral* identified as access control. (Exhibit 6). The GEN5 meets every element of the alleged invention of the '972 Patent.

Oracle-Huawei-NetApp Ex. 1024, pg. 2380

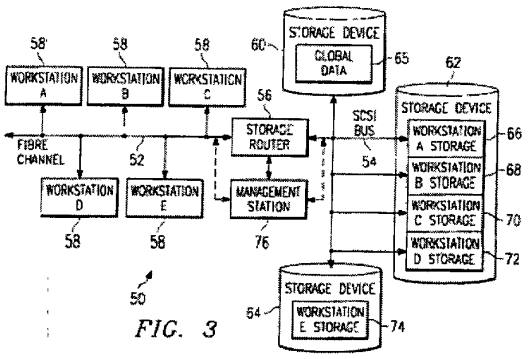

FIG. 3

In comparing the last configuration of the Gen5 (shown on the previous page) to an embodiment of the invention of the '972 Patent as shown in Fig. 3 of the '972 Patent specification above, it is clear that the GEN5 anticipates every element of the '972 Patent. The only difference between Fig. 3 and the last configuration of the GEN5 is that the workstations in Fig 3. are attached to a single Fibre Channel transport medium, while the workstations of the GEN5 are attached to separate Fibre Channel transport mediums.

However, it is important to note that Claim 1 of the '972 Patent does not require every Fibre Channel device to be connected to a single Fibre Channel transport medium. The chart below identifies an excerpt of Claim 1 that addresses this issue and a full detailed analysis appears in Appendix A. Further analysis in relation to the '972 Patent is presented in Appendices B and C.

HIGHLY CONFIDENTIAL - ATTORNEYS' EYES ONLY

Oracle-Huawei-NetApp Ex. 1024, pg. 2381

'972 Patent claim 1	
1. A storage router for providing virtual local storage on remote SCSI storage devices to Fibre Channel devices, comprising: ...	
... to maintain a configuration for SCSI storage devices connected to the SCSI bus transport medium that maps between Fibre Channel devices and SCSI storage devices and that implements access controls for storage space on the SCSI storage devices; and	This claim element does not specify that there is cooperation between the Fibre Channel devices and the Fibre Channel transport medium. Nowhere in the claim is such cooperation specified. Therefore, maintaining a configuration, mapping, and access control can be accomplished without any restriction that the Fibre Channel devices must be on a single Fibre Channel transport medium. According to this claim, the Fibre Channel devices are not required to be connected to anything. The GEN5 allows access control, mapping, and maintaining a configuration by configuring a port for each Fibre Channel device and renders the '972 Patent invalid.

To amplify the fact that there is no requirement in the '972 Patent that the Fibre Channel devices connect to a Fibre Channel medium, the cooperation of the limitations of Claim 1 are illustrated clearly in the figure below.

Storage Router as Recited in Claim 1 of '972 Patent

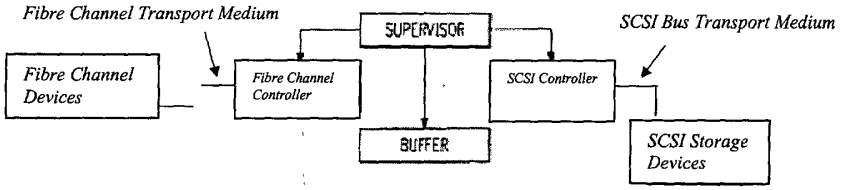

Without the limitation that a Fibre Channel Device must be connected to only a single Fibre Channel transport medium, the claim is broad enough to address any situation where there are multiple Fibre Channel devices. Thus, using a number of ports to connect individual Fibre Channel devices to GEN5 would be covered by claim 1. As a

Oracle-Huawei-NetApp Ex. 1024, pg. 2382

result, GEN5 completely anticipates the subject matter claimed in the '972 Patent and renders the '972 Patent invalid.

VI. THERE WERE OTHER CONTROLLERS ON THE MARKET PRIOR TO THE INVENTION OF THE '972 PATENT THAT PERFORMED ACCESS CONTROLS

In addition to the Maxstrat Gen5, there were other RAID controllers that performed access controls and were commercially available at the time of the alleged invention of the '972 Patent.

Storage Technologies, Inc. (known as "StorageTek") designed and manufactured the Iceberg RAID controller before 1997. Iceberg performed access control; Iceberg made selected hosts blind to selected storage based on the permission granted to those selected hosts. Iceberg connected a plurality of IBM mainframe host computers to partitions and subsets of multiple SCSI storage devices. As described in the '972 Patent, Iceberg contained a supervisor unit, which was coupled to a buffer, a host controller and a storage controller. The host and storage controllers included protocol units, FIFO buffers and DMA. Iceberg performed mapping to present a virtual Count-Key-Data disk interface to the hosts for the fixed-block allocation SCSI disk drives.

Similarly, CMD Technology, Inc. made the CRD-5500 SCSI RAID Controller before 1997. The CRD-5500 includes all the elements described in the '972 Patent, except for the addition of Fibre Channel to the host interface, which is an obvious addition. Features for access controls to partitions of disks and subsets of disks (called "redundancy groups") are explained in the *CRD-5500 SCSI RAID Controller User's Manual, Rev. 1.3*, published November 21, 1996, which is included as Exhibit 14.

> "The controller's Host LUN Mapping feature makes it possible to map RAID sets differently to each host. You make the same redundancy group show up on different LUNs to different hosts, or make a redundancy group visible to one host but not to another." (CRD-5500 User's Guide, page 1-1, Section 1.2).

Oracle-Huawei-NetApp Ex. 1024, pg. 2383

"4.3.3 Host LUN Mapping

This screen may be used to map LUNs on each host channel to a particular redundancy group. Or you may prevent a redundancy group from appearing on a host channel. Thus, for example, you may map redundancy group 1 to LUN 5 on host channel 0 and the same redundancy group to LUN 12 on host channel 1. Or you may make redundancy group 8 available on LUN 4 on host channel 0 and block access to it on host channel 1." (CRD-5500 User's Guide, page 4-5, Section 4.3.3).

Finally, Infortrend Technologies, Inc. made the IFT-3000 before 1997. The IFT-3000 is also a SCSI RAID controller, and includes all the elements described in the '972 Patent except for the addition of Fibre Channel to the host interface, which is an obvious addition. A chart is included in Exhibit 15 comparing elements described in the IFT-3000 Instruction Manual with each limitation in Claim 1 of the '972 Patent. A copy of the *IFT-3000 SCSI to SCSI Disk Array Controller Instruction Manual Revision 2.0*, published in 1995, is included as Exhibit 16.

VII. THE '972 PATENT IS INVALID AS IT IS ANTICIPATED BY U.S. PATENT NO. 6,073,209 TO BERGSTEN

The '972 Patent is also anticipated by U.S. Patent No. 6,073,209 (the '209 Patent) titled "Data storage controller providing multiple hosts with access to multiple storage subsystems," to Bergsten, filed March 31, 1997, which was prior art as of the '972 Patent's filing date. A copy of the '209 Patent is included in Exhibit 1, and the claim chart comparing elements of this Patent to limitations in the claims of the '972 Patent is included in Exhibit 22. The '209 Patent describes a form of access controls using low level, block protocols. For example, the '209 Patent states in the ABSTRACT section:

"Each storage controller may be coupled to at least one host processing system and to at least one other storage controller to control access of the host processing systems to the mass storage devices."

The '209 Further states, in column 15, lines 39 to 47:

"A storage controller of the present invention further allows data blocks to be write protected, so that a block cannot be modified from any

Oracle-Huawei-NetApp Ex. 1024, pg. 2384

host computer. Write protection may be desirable for purposes such as virus protection or implementation of security firewalls. Write protection can be achieved by configuring the storage controller appropriately at set-up time or by inputting a write protect command to the storage controller from a host computer."

The '209 Patent thus describes how to control access of hosts to storage devices by allowing data blocks to be write protected from host computers. Since data blocks can be write protected, the '209 Patent describes a storage controller that limits a computer's access to subsets of storage devices or sections of a single storage devices, which is what the Court in *Chaparral* identified as access control (Exhibit 6). In addition, this explicit reference to security-oriented data protection provides strong motivation to a person of ordinary skill in the art to combine the '209 Patent and other prior art storage routers with enhanced security features.

The '209 Patent also includes all the remaining elements of the claims of the '972 Patent: a RAM buffer (column 6, line 26); a Fibre Channel controller (column 4, line 28); a SCSI controller (column 4, line 21); a CPU supervisor unit (column 6, line 26); and mapping (column 3, line 18). See Figure 3 from the '209 Patent, included below, depicting a STORAGE CONTROLLER with CPU, RAM, HOST DEVICE I/F (interface) with arrows leading TO/FROM HOST (Fibre Channel transport medium), and STORAGE DEVICE I/F with arrows leading TO/FROM LOCAL EXTERNAL STORAGE DEVICES (SCSI bus transport medium).

Oracle-Huawei-NetApp Ex. 1024, pg. 2385

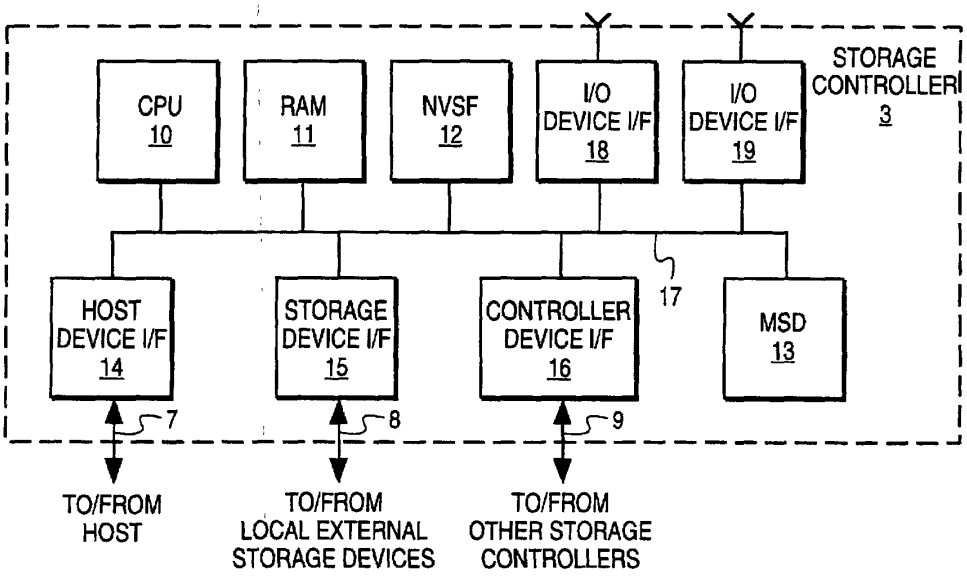

FIG. 3

Thus, the '209 Patent anticipates the '972 Patent, or in the alternative, provides strong intrinsic motivation to combine a Fibre Channel to SCSI storage router with access control.

VIII. THE ALLEGED INVENTION OF THE '972 WAS OBVIOUS IN LIGHT OF THE PRIOR ART AND NUMEROUS MOTIVATIONS TO COMBINE

The Obviousness Standard.

"... [T]he standard under 35 U.S.C. § 103 [for obviousness] is what would have been obvious to one of ordinary skill in the art, and the level of the skilled artisan should not be underestimated. See *In re Sovish*, 769 F.2d 738, 743, 226 USPQ 771, 774 (Fed. Cir. 1985)." *Ex Parte Richard A. Flasck*, 2000 WL 33520310, *3. (Exhibit 17). Factors that may be considered in determining level of ordinary skill in the art include: (1) the education level of the inventor; (2) type of problems encountered in the art; (3) prior art solutions to those problems; (4) rapidity with which innovations are made; (5) sophistication of the technology; and (6) education level of active workers in the field.

Oracle-Huawei-NetApp Ex. 1024, pg. 2386

Environmental Designs v. Union Oil Co. of Cal., 713 F.2d 693, 696-697 (Fed.Cir.1983), cert. denied, 464 U.S. 1043, 104 S.Ct. 709, 79 L.Ed.2d 173 (1984) see also *Orthopedic Equipment Co., Inc. v. All Orthopedic Appliances, Inc.*, 707 F.2d 1376 at 1381-1382 (Fed.Cir.1983). The level of one of ordinary skill is evaluated at the time the invention was made. Id at 1382.

The Field of Endeavor.

The first question in an obviousness argument is whether the references are in the field of the inventor's endeavor. *In re Deminski*, 796 F.2d 436, 230 U.S.P.Q. 313, (Fed.Cir., Jul 08, 1986). The field of art that encompasses the '972 Patent, as well as the Related Patents, is that of computer science and electronics. Some of the hardware identified in the '972 Patent includes routers, networks, bridges, servers, controllers, storage devices, storage disks, microprocessors, buffers, storage controllers, and workstations. The prior art would encompass, at least, the fields of computer science and electronics as it relates to the hardware discussed above.

It is common knowledge that the computer science and electronics field is one that has experienced, and continues to experience, rapid development and complexity in hardware and software. As a result, a person skilled in the art would be someone with a degree in Computer Science, Electrical Engineering or an equivalent, with perhaps seven or more years of professional experience, and with knowledge of at least computer hardware, systems, electronics, and software in such an area of rapid innovation.

The Motivation to Combine

Identification in the prior art of each individual part claimed is insufficient to defeat patentability of the whole claimed invention. Rather, to establish obviousness based on a combination of the elements disclosed in the prior art, there must be some motivation, suggestion, or teaching of the desirability of making the specific combination

Oracle-Huawei-NetApp Ex. 1024, pg. 2387

that was made by the applicant. *In re Kotzab*, 217 F.3d 1365, 1369-1370 (C.A.Fed., 2000).

Obviousness and Motivation to Combine in Light of the 1984 Byte Magazine Article

As has already been discussed, one of the two inventors of the '972 Patent admitted under oath that the only limitation of the '972 Patent that is not taught by prior art is the movement of access controls from the network server to the router. This petition has identified no less than four RAID controllers – or "routers" – (five if one includes the DEC HSZ70 RAID controller) that performed access controls. However, even if one were to ignore those prior art RAID controllers, the movement of access controls from the network server into the router would have been obvious in light of an article published in Byte Magazine in 1984.

Further, the GEN5 prior art RAID controller discussed above connected to Fibre Channel hosts on one end and SCSI storage devices on the other, just like the device described in the '972 patent. However, the remainder of the RAID controllers connected to hosts and storage devices using other protocols. The decision to connect the router described in the '972 Patent to hosts through the Fibre Channel transport medium, and to connect the router to storage devices through the SCSI transport medium would have been obvious in light of the 1984 Byte Magazine article.

"Local-Area Networks for the IBM PC" was written by J. Scott Haugdahl ("*Haugdahl*") and published in the December 1984 edition of Byte Magazine. Byte Magazine is a widely-read computer magazine and publicly available. (Exhibit 18). The *Haugdahl* article teaches the following:

- A need to preserve the benefits of a stand-alone personal computer system while obtaining the benefits from networking.

> "Thus, with LANs you want to preserve the benefits of stand-alone microcomputers, namely, use of your favorite software and peripherals and having a machine all to yourself, as well as adding new benefits from networking." (p. 147, col. 2).

Oracle-Huawei-NetApp Ex. 1024, pg. 2388

Network benefits known at the time of the invention included access controls and mapping. This reference, however, is not limited to just networks, but provides motivation to develop systems other than networks that have some desirable network characteristics.

- A trend in the industry toward using open systems that follow published specifications, such as Fibre Channel and SCSI protocols.

> "Most systems that follow de facto standards, such as Ethernet or Arcnet, and those that follow 'committee' standards, such as IEEE-802 or those of the National Bureau of Standards, tend to be open systems." (p. 147, col. 3).

Fibre Channel and SCSI were available during the time of the alleged '972 invention.

- Access controls that enabled only a particular user to access data.

> "Because all these servers support multiple users, you're going to need some sort of password protection scheme, as well as some means of protecting the data of one user from another." (p.151).

This clearly teaches restricting access to stored data. It is not limited to any particular implementation and could very well be the impetus to use such schemes as LUN masking.

- Servers were known to be a potential bottleneck problem.

> "However, the server is a potential bottleneck, particularly if you don't go with a high-performance processor." (p. 154, col. 3).

Bottlenecks were a well known problem and a person skilled in the art would be sensitive to alternatives, such as having the router perform access controls, as opposed to the server.

- Implementing access controls at a low level.

Oracle-Huawei-NetApp Ex. 1024, pg. 2389

"Disk service users' requests for disk I/O (input/output) at a low level. ... Thus the server is really a disk 'volume' server, and file I/O is handled directly by the operating system in the PC." (p. 154, col. 3).

Here is the connection between native low-level protocols as used by a personal computer and the difference as it existed in 1984 for file servers.

- Access control and virtual local storage.

"EtherShare manages virtual disks at the volume level. Passwords are required to 'log on' and optional passwords can be placed on volume. Volumes can be made private for individual use only, public for use by several users in a read-only fashion, and shared for multiple read/write access." (p. 156, col.2).

"[Regarding Corvus] It was simply a device that allowed you to share a hard disk by partitions." (p. 163, col. 3). "[Regarding Nestar] [I]n fact, if you had two PLAN 4000 systems with a gateway server, you could establish virtual connections with disks on other network file servers and use them as if they were local." (p. 166, col. 3).

Virtual access to disks, security-oriented access control, private and shared hard disks, and use of remote storage devices having the appearance and characteristics of local storage were well documented and available to consumers at least as early as 1984.

The article further highlights numerous disadvantages to using file servers for the performance of certain functions and directly indicates how handling a file with a personal computer's I/O is more direct. The type of I/O endemic to the personal computer is a native low-level block protocol. A person skilled in the art would realize that a remote storage device, like that provided by a file server, would be more desirable if it utilized the I/O handling like that of a personal computer. Further, a person skilled in the art would realize that other network-like options would be desirable. Those options would include access control.

Obviousness and Motivation to Combine in Light of the 1995 *Bursky* Article

Similar to the *Haugdahl* article, Dave Bursky wrote an article that appeared in the February 6, 1995 edition of "Electrical Design" entitled "New Serial I/O Speed Storage

Oracle-Huawei-NetApp Ex. 1024, pg. 2390

Subsystems" (Exhibit 19) that also teaches the desirability of connecting workstations to a storage controller or router via the Fibre Channel protocol.

- The Bursky article teaches that Fibre Channel helps relieve problems with remote, high-speed devices, such as noise, signal integrity, speed, and bulky cables.

> "Using a serial interface also helps relieve one of the largest headaches when it comes to connecting many high-speed devices together - noise and signal integrity. ... Therefore, to achieve top performance, long parallel cables must be eliminated to control impedance, minimize crosstalk, and allow data transfers to run at maximum speeds. ... The FC drives eliminate the need for large connectors and bulky SCSI cable." (*Bursky*, p. 81, col. 2 to p. 82, col. 1.)

- The Bursky article teaches that Fibre Channel chips were commercially available.

> "Aside from Seagate's disk drives, only a handful of FC storage interfaces are immediately available and just a few companies offer any silicon. The smattering of chips on the market include several choices from Applied Micro Circuits, Hewlett-Packard (G-Logic chip set), LSI Logic (megacells), Microelectronics Technology Center, NCR, Rockwell International, TriQuint Semiconductor, and Vitesse Semiconductor." (*Bursky*, p. 88, col. 3.)

The Bursky article expounds the virtues of Fibre Channel and lists several manufacturers from which Fibre Channel controllers for storage interfaces can be acquired.

<u>One of the Inventors Admitted To Obviousness and a Motivation to Combine.</u>

In fact, one of the inventors of the '972 Patent testified under oath in the *Chaparral* litigation that a person skilled in the art would have known at the time of the filing of the '972 Patent that various known and readily identifiable problems would be solved by: 1) connecting the prior art router described in the '972 Patent to hosts by way of the Fibre Channel transport medium, and; 2) performing the access control function in the router, as opposed to the network server.

Oracle-Huawei-NetApp Ex. 1024, pg. 2391

"...there's a general need in computing to increase the addressability of devices, of storage devices, for example. There's a general need to increase the speed of communication to those devices. There's a general need to increase the distance over which you can communicate to devices. And most fundamentally, I'd say that was the set of capabilities that we were interested in providing solutions for; and in doing so, you know the, for example, fibre channels, in general technology addresses a number of those issues over and beyond the benefits of previous technologies. And to, that's you know, that's a nice, general set of problems that were addressed."

(Deposition of Hoese, page 125-126.) (Exhibit 20).

"...the main problem is the network server is expensive to maintain, it has various bottlenecks in transferring data between these things, has to go through a lot of effort to translate the data requests, get the data from one side to the other."

(Trial transcript of Hoese, page 59-60.) (See above).

There is no indication that the general needs spoken of by Hoese constituted a unique problem known only by the Patentees, or that the Patentees forever solved these general needs with their alleged invention, or that there was a long felt need to solve these problem that now ceases to exist due to the Patentees alleged invention. Finally, it is clear that the Patentees did not discover the source of any of these general needs or their solutions; the needs and solutions were known to the industry at the time.

The Patentees sworn testimony shows that a person skilled in the art at the time of the alleged invention embodied in the '972 Patent would have been acutely aware of a variety of needs in the field. These needs provide the motivation for a person skilled in the art to seek a solution.

IX. ADDITIONAL PRIOR ART THAT ADDRESSES EACH OF THE GENERAL NEEDS AS IDENTIFIED BY THE SWORN TESTIMONY OF THE INVENTORS

The prior art RAID controllers discussed herein, the magazine articles, and the testimony of the inventors of the '972 are reason enough to find that the '972 Patent should have never issued. However, in the interests of bringing all prior art to the

Oracle-Huawei-NetApp Ex. 1024, pg. 2392

attention of the examiner and the Patent Office, we supply, below, additional prior art that addresses each of the needs as identified by the inventors in sworn testimony.

Increased speed

Increasing the speed at which data was transferred from a host to storage and back again was one problem identified by testimony of the inventors, supra, and was commonly known throughout the industry. As already discussed above, it was well known in the prior art at the time of the '972 Patent invention that the Fibre Channel protocol was extremely fast and operated above 1 gigabit per second in transmission speed. See Berman, U.S. Patent No. 6,185,203, see also U.S. Patent No. 5,638,518 to Malladi, filed October 24, 1994 and issued June 10, 1997 starting at Column 2, Line 54. Use of Fibre Channel was available and would have been an obvious selection to one skilled in the art. (Exhibit 1).

Reduction of data translation requests

Concerning the reduction of translation of data requests, it was also well known in the prior art that Fibre Channel and SCSI shared a common protocol. In particular, the highest level in the Fibre Channel standards set, FC-4, defines the mapping between the lower levels of the Fibre Channel and SCSI command sets. U.S. Patent No. 6,185,203 to Berman at Column 6, starting at line 18, identified as prior art as of the filing date of February 18, 1997. This well known prior art commonality reduces any need for data translation between Fibre Channel and SCSI protocols. "Multiple protocols such as SCSI (Small Computer Serial Interface), IP (Internet Protocol), HIPPI, ATM (Asynchronous Transfer Mode) among others can concurrently utilize the same media when mapped over Fibre Channel." Id. Abstract. "One of the reasons that Fibre Channel is so popular is that one of the payloads and upper level protocols which can be mapped, is the protocol for SCSI." U.S. Patent No. 5,959,994 to Boggs, et al, filed August 19, 1996, issued September 28, 1999, statement appearing as prior art starting at Col. 3 at Line 11. (Exhibit 1).

Oracle-Huawei-NetApp Ex. 1024, pg. 2393

The connection between Fibre Channel and SCSI allows for the transmission of data using Fibre Channel low-level block protocols. U.S. Patent No. 5,638,518 to Malladi, filed October 24, 1994 and issued June 10, 1997 starting at Column 2, Line 54. A person skilled in the art at the time of the alleged invention of the '972 Patent would have found it obvious to use a combination of Fibre Channel and SCSI protocols to connect a router to hosts and storage devices, in order to reduce data translation requests. (Exhibit 1).

The issue of distance

As to the need to allow for greater distances between hosts and storage devices, it was well known in the prior art that Fibre Channel offered the availability of a greater distance. U.S. Patent No. 5,519,695 to Purhoit, et al, starting at Column 2, Line 12 identified as prior art as of the filing date of October 27, 1994. (Exhibit 1).

Addressability

The '972 Patent identifies addressability in three different instances. First, as a map between the Fibre Channel controller and the SCSI controller. Second, as it relates to Fibre Channel devices and SCSI devices. Third, as access controls.

Mapping between the Fibre Channel controller and the SCSI controller

As to the first instance, mapping between a Fibre Channel controller and a SCSI controller was well-known in the art as evidenced by U.S. Patent No. 5,748,924 to Llorens, et al, filed October 17, 1995, issued May 5, 1998. Also, as identified above, the Patentees admitted that mapping was prior art.

While the Llorens Patent was reviewed during the initial examination of the '035, '972, and '036 Patents, presenting it again in this context is permissible. "The existence

Oracle-Huawei-NetApp Ex. 1024, pg. 2394

of a substantial new question of Patentability is not precluded by the fact that a Patent or printed publication was previously cited by or to the Office or considered by the Office." 35 U.S.C. §303(a), which overruled a portion of the case of In re Portola on the issue of using art relied upon in the initial examination. See 2002 Amendments. Pub.L. 107-273, § 13105(a), inserted "The existence of a substantial new question of Patentability is not precluded by the fact that a Patent or printed publication was previously cited by or to the Office or considered by the Office." (Exhibit 1).

Addressability of Fibre Channel devices and SCSI devices

It was well-known in the prior art how to identify the existence of Fibre Channel devices and SCSI devices connected to a computer or on a network. See U.S. Patent No. 5,317,693 to Cuenod, et al., titled "Computer peripheral device network with peripheral address resetting capabilities" filed April 4, 1991, issued May 31, 1994. U.S. Patent No. 5,664,107 to Chatwani, et al, titled "Method for providing for automatic topology discovery in an ATM network or the like" filed June 7, 1995, issued September 2, 1997. U.S. Patent No. 4,827,411 to Arrowood, et al, titled "Method of maintaining a topology database" filed June 15, 1987, issued May 2, 1989. Again, as identified above, the Patentees admitted that Fibre-to-SCSI storage routers were prior art and these types of routers, as shown in figure 2 of the '972 Patent, had a number of workstations and storage units attached to the Fibre and SCSI channels. Such a situation could not have existed unless the devices on the channels were addressable. (Exhibit 1).

Access Controls

The *Haugdahl* article addressed access control as far back as 1984. Concerning access control, Fibre Channel was known to be, "a channel-network hybrid, containing enough network features to provide the needed connectivity, distance and protocol multiplexing, and enough channel features to retain simplicity, repeatable performance and reliable delivery." Arrowood Id. The Patentees admitted that one of the network's functions was the performance of access control.

Oracle-Huawei-NetApp Ex. 1024, pg. 2395

Q. Okay. Can you explain your invention of the 972 Patent invention in your own words, sir?

A. The invention provides a method for connecting computers to storage devices, providing that connectivity, the ability to map storage between different devices, providing virtual local storage and security management capabilities for those devices.

Q. Well, what was the state-of-the-art at the time that you came up with your invention? How were people doing that sort of thing?

A. Primarily through the use of network servers.

(Trial transcript of Hoese. Page 58, starting at line 16.) See above.

Q. So how did your invention improve on this basic situation?

A. Well, using the invention in this role, you basically have the computers on the one side speaking their native low-level block protocols that they communicate with to storage devices, routing those through a storage router, and connecting those devices to the actual storage without having to do the translation from the – through the network protocols or translation through the file system.

(Trial transcript of Hoese. Page 60, starting at line 19.) See above.

Q. Mr. Russell, you said you solved problems that existed in the world just a moment ago. Could you elaborate on that, what you meant by that?

A. Sure. That was the initial problem that we saw to be solved by the invention which is the way that storage was hooked up remotely. So it was done through network file servers across the network, and that's how you accessed storage.

(Trial transcript of Russell. Page 115, starting at line 5.) (Exhibit 21).

By admission of both Patentees, a prior art network file server had the ability to perform all the functions identified by the invention, including restricting the addressability of the storage units, i.e. access control. What the networks did not do was operate using native low-level block protocols.

However, as shown above, it was well known in the art that transport mediums such as Fibre Channel and SCSI contained network capabilities and could work at low-level block protocols The ability to identify, address, and partition storage drives for

Oracle-Huawei-NetApp Ex. 1024, pg. 2396

access by a host computer was well-known in the art at the time of the filing of the '972 Patent. As already discussed, this was evidenced by prior art RAID controllers such as the GEN5, CRD 5500, Iceberg and Infortrend 3000. However, it was also evidenced by U.S. Patent No. 5,634,111 to Oeda, et al, filed March 1993, issued May 27, 1997, reference in the Abstract. See also U.S. Pat. No. 4,961,224 to Yung titled "Controlling access to network resources," filed March 6, 1989, issued October 2, 1990. Also, U.S. Patent No. 5,659,756 titled, "Method and system for providing access to logical partition information on a per resource basis," to Hefferon, et al, filed March 31, 1995 discloses a system that partitions a subset of main storage. (Exhibit 1).

Another form of access control is identified in U.S. Patent No. 6,073,218 titled, "Methods and apparatus for coordinating shared multiple raid controller access to common storage devices," to DeKoning, et al, filed December 26, 1996, that was prior art as of the Patent filing date, which states in the "BACKGROUND OF THE INVENTION" section that

> "There are five 'levels' of standard geometries defined in the Patterson publication. The simplest array, a RAID level 1 system, comprises one or more disks for storing data and an equal number of additional "mirror" disks for storing copies of the information written to the data disks. The remaining RAID levels, identified as RAID level 2, 3, 4 and 5 systems, segment the data into portions for storage across several data disks. One or more additional disks are utilized to store error check or parity information."

Thus, storage across disks addresses the concept of assigning subsets of the disk so as to retain information from a specific workstation. (Exhibit 1).

The prior art identifies aspects of a distributed security system in which access to system resources is controlled by access control lists associated with each system resource. U.S. Patent No. 5,315,657 to Abadi, et al., issued: May 24, 1994, filed September 28, 1990. Access control lists are used to define the extent to which different users will be allowed access to different resources on a server depending on the level of access control implemented on a given server, access control lists for a given disk defines the access restrictions for all the resources or files stored on that disk. U.S. Pat. No.

Oracle-Huawei-NetApp Ex. 1024, pg. 2397

5,889,952 to Hunnicutt, et al, issued March 30, 1999, filed: August 14, 1996 under the "STATEMENT OF THE PROBLEM" as part of prior art as of the filing date of August 14, 1996. Each host processor has exclusive access to its own set of storage devices and it cannot access the storage device of another host. U.S. Pat. No. 5,860,137 to Raz, et al, issued January 12, 1999, filed: July 21, 1995 under the "BACKGROUND OF THE INVENTION" As part of prior art as of the filing date of July 21, 1995. These groups of files form virtual disks, sometimes referred to as mini-disks, which for purposes of this description are identified by a number. A list of authorized users must exist for each mini-disk. U.S. Pat. No. 5,469,576 to Dauerer, et al, issued November 21, 1995, filed March 22, 1993. (Exhibit 1).

Given the Patentees sworn admission that a Fibre to SCSI storage router was well known in the art, it would have been obvious to a person skilled in the art to start with a router and implement changes to address the need for access controls within the router. This, in turn, would have led to the design of a device that incorporated all the limitations as found in the '972 Patent.

X. A PERSON OF ORDINARY SKILL IN THE ART AT THE TIME OF THE ALLEGED INVENTION WOULD BE MOTIVATED TO ADD ACCESS CONTROLS TO EXISTING STORAGE ROUTERS

A Person of Ordinary Skill in the Art at the Time of the Alleged Invention

The '972 Patent identifies the invention as a bridge device. '972 Patent Column 5 starting at Line 34. At the time the '972 Patent was filed, a person skilled in the art of the computer field would have knowledge of networks, server, routers, bridges, and brouters. Furthermore, such a person would be familiar with connecting workstations and storage devices with the items listed above. It is thus important to identify what encompasses a bridge and other related devices at the time of the filing of the '972 application.

Oracle-Huawei-NetApp Ex. 1024, pg. 2398

"In general, routers are used to interconnect different configurations of LANs (Ethernet to token ring, for example), over arbitrary distances, while bridges are used to interconnect locally like configurations of LANs (token ring to token ring, for example)." U.S. Patent No. 5,426,637 to Derby, et al, filed December 14, 1992, issued June 20, 1995, (Emphasis added). (Exhibit 1).

> "A router is an internetworking device that chooses between multiple paths when sending data, particularly when the paths available span a multitude of types of local area and wide area interfaces. Routers are best used for (1) selecting the most efficient path between any two locations; (2) automatically re-routing around failures; (3) solving broadcast and security problems; and (4) establishing and administering organizational domains. One class of router, often called bridge/routers or Brouters, also implements switching functionality, such as transparent bridging and the like."

U.S. Patent No. 5,802,278 to Isfeld, et al, identified as prior art as of the date of filing the application, starting at Column 1 at Line 23, filed January 23, 1996, issued September 1, 1998, (Emphasis added). (Exhibit 1).

A brouter (bridge/router) is a device that connects two or more LANs. A brouter allows stations on one LAN to connect to stations on different LANs. U.S. Patent No. 5,781,715 to Sheu, identified in "Prior Art" as of the filing date starting at Column 1, Line 26, filed October 13, 1992, issued July 14, 1998, emphasis added. (Exhibit 1).

> "A previously known local area network (LAN) is used to interconnect multiple personal computers or work stations, called 'clients,' and a network server. The network server comprises a personal computer and a program which provides a variety of services to the clients. For example, the server manages a local disk (DASD) and permits selected (or all) clients on the LAN to access the disk. Also, the server may provide access by LAN clients to a local printer that the server manages. To access the local disk, the client must first establish a session or 'log-on' to the server with a valid account and password and request a connection to the local disk. In response, the server validates the account and password, and grants the connection if available. Then, the client requests a remote file operation (e.g. open, read, write, close) and furnishes associated parameters. In response, the server may copy (depending on the operation) the file from the local disk into RAM, and performs the operation requested by the client. If the file is updated,

Oracle-Huawei-NetApp Ex. 1024, pg. 2399

the server will copy the updated version back to the local disk, overwriting the previous version."

U.S. Patent No. 5,642,515 to Jones, et al, titled "Network server for local and remote resources," filed April 17, 1992, issued June 24, 1997, in the background section identifying prior art, starting at Column 1 at Line 11, emphasis added. (Emphasis added). (Exhibit 1).

From the references above, it is clear that a person skilled in the art at the time of the filing of the '972 Patent application would understand the principles and applications of: 1) connecting a multiplicity of computing devices together, or to a system; 2) connecting a variety of peripherals to a system; 3) interfacing between like and different mediums; 4) controlling the access to storage units; 5) techniques for making a storage device transparent to a workstation (virtual local storage); and 6) a thorough understanding of similarities and differences in the various protocols in the computer field.

Motivation to add Access Controls to Existing Storage Routers

The central question in combining a variety of elements to arrive at the invention in a Patent is, "what would motivate a person to combine the elements?" In the present case, the Patentees have provided the answer to this question. Through sworn testimony, the Patentees identified a number of general problems in the field. The nature of the problem can lead inventors to look to references relating to possible solutions to that problem. In re Rinehart, 531 F.2d 1048, 1054, 189 USPQ 143, 149 (CCPA 1976).

As discussed above, inventor Hoese testified at trial that a storage router having every limitation of the alleged invention of the '972 Patent, except for access control, was prior art as identified in Fig. 2 of the '972 Patent and the related written description. Also, inventor Hoese stated that the alleged invention of the '972 Patent was just adding access control to a storage router. The Iceberg, GEN5, CRD-5500, and IFT 3000 prior art RAID controllers were all "routers" (as defined by the Court in the *Chaparral* case)

Oracle-Huawei-NetApp Ex. 1024, pg. 2400

that performed access controls. The designers of each of those controllers understood clearly the benefits of having those RAID controllers perform access controls, as opposed to a network server. The article written by *Haugdahl*, above, identifies that making volumes private by using passwords was a desirable feature for a network type system. Further, inventor Hoese identified that addressibility was a well-known issue in the field. Further, the article written by *Haugdahl,* and the patents to Oeda, Yeung, Hefferon, DeKonig, Abadi, Hunnicutt, Raz, and Dauerer all discuss not only the existence of well-known techniques for restricting access to storage devices in systems involving multiple hosts and multiple storage devices, but the need to do so.

Given the prior art storage router in Fig. 2 of the '972 Patent, the prior art RAID controllers discussed herein, the teaching from *Haugdahl* that it was desirable to include access control in systems like the storage router in Fig. 2, the Patentees testimony that addressibilty was an issue at the time of the alleged invention embodied in the '972 Patent, the numerous prior art patent references to access control, and the knowledge of those in the art regarding the use of access controls in storage systems, it would have been obvious to one skilled in the art at the time of the alleged invention of the '972 Patent to merely add access control to a prior art storage router and arrive at the '972 Patent.

XI. VALIDITY ANALYSIS: EXHIBITS CITING PRIOR ART AND EXPLAINING THE PERTINENCY AND MANNER OF APPLYING THE CITED PRIOR ART

Due to the large quantity of prior art cited in this request for reexamination, we include appendices and exhibits to explain the pertinency and manner of applying the cited prior art in tabular form rather than to embed hundreds of pages of analysis within this request. Although the analysis in the appendices and exhibits refer directly only to a selected subset of the claims of the '972 Patent, all arguments for invalidity apply equally to the remaining claims of the '972 Patent.

Oracle-Huawei-NetApp Ex. 1024, pg. 2401

Appendix A includes an analysis of the meaning of terms used in Claim 1 of the '972 Patent, based upon the *Chaparral Markman* order, the patentee's admissions, and the prior art.

Appendix B includes a matrix summarizing and identifying the elements of Claim 1 of the '972 Patent that are found in each of the cited prior art U.S. Patents and printed publications.

Appendix C includes a listing of possible prior art combinations in support of an obviousness rejection claims of the '972 Patent under 35 U.S.C. §103.

Exhibit 22 includes charts for each of the U.S. Patents and printed publications identified in Appendix B, indicating the relevant portions of the prior art that pertain to elements of the '972 Patent claims.

Below, please find the detailed analysis of each of the fourteen (14) claims of the '972 Patent and summary of alternative prior art references and combinations that render each claim invalid.

Claim 1

Claim 1 states:

> 1. A storage router for providing virtual local storage on remote SCSI storage devices to Fibre Channel devices, comprising:
>
> a buffer providing memory work space for the storage router;
>
> a Fibre Channel controller operable to connect to and interface with a Fibre Channel transport medium;
>
> a SCSI controller operable to connect to and interface with a SCSI bus transport medium; and
>
> a supervisor unit coupled to the Fibre Channel controller, the SCSI controller and the buffer, the supervisor unit operable:
>
> to maintain a configuration for SCSI storage devices connected to the SCSI bus transport medium that maps between Fibre Channel devices and SCSI storage devices and that implements access controls for storage space on the SCSI storage devices; and
>
> to process data in the buffer to interface between the Fibre Channel controller and the SCSI controller to allow access from Fibre Channel initiator devices to SCSI storage devices using native low level, block protocol in accordance with the configuration.

Oracle-Huawei-NetApp Ex. 1024, pg. 2402

Claim 1 is Invalid Based on RAID Controllers in the Prior Art that Already Have Access Controls

As discussed above, the patentees admitted that Fig. 2 was prior art, and thus, that the idea of a "storage router" mapping between Fibre Channel workstations and SCSI disk drives was already known. Such a storage router is also clearly described in the manuals for the Maxstrat Gen5, [See Exhibit 10, Claim chart, and Exhibits 11 and 12, Gen5 manuals], CRD-5500 and the IFT-3000.

The patentees have admitted that the only component of the alleged invention of the '972 Patent that they believe to be innovative is the performance of "access control" using "low level, block protocols" in the router device.

However, as discussed above and demonstrated in Exhibits 10 and 11, the Maxstrat Gen5 router device implements access controls using low level, block protocols. As the Gen5 manuals show, access control was configured for the Gen5 by using the "ifp" command which includes the "luns bitmask enable" field. This field is used to specify the enabling of LUNs on interface ports to provide access to "facilities" (storage units). [See Exhibit 10, Claim chart, pages 5 and 6; see Exhibit 11, Gen5 System Guide, pages 4-42 to 4-43]. The same is true for the CRD-5500, IFT-3000 and Iceberg RAID controller/router devices.

The Court in the *Chaparral* case defined "implements access controls for storage space on the SCSI storage devices" as "provides controls which limit a computer's access to a specific subset of storage devices or sections of a single storage device." (Exhibit 6, starting on page 3; Exhibit 6, page 15). The Gen5 did exactly that - a simple and reasonable configuration of the Gen5 would result in some computers having access to specific RAID sets (which could be a subset of storage devices or sections of a single storage device), while other computers would not have access to those specific storage units.

Oracle-Huawei-NetApp Ex. 1024, pg. 2403

The CRD-5500 had a similar access control called "Host LUN Mapping." The CRD-5500 Host LUN Mapping feature made it possible to map RAID sets differently to each host. (Exhibit 14, CRD-5500 User's Guide, pages 1-1 and 4-5). The IFT-3000 also had a similar feature for mapping LUNs to logical drives (Exhibit 15 Claim chart). The only element of the '972 Patent missing from the CRD-5500 or IFT-3000 is the use of the Fibre Channel transport medium to communicate with hosts, which is admitted by the patentees to be part of the prior art described in Figure 2.

Thus, the Maxstrat Gen5 anticipates Claim 1 under 35 U.S.C. §102, and the CRD-5500 and IFT-3000, in light of the admitted prior art of Figure 2, render Claim 1 obvious under 35 U.S.C. §103.

Claim 1 is Also Invalid Based on Adding Access Controls to U.S. Patents in the Prior Art

The RAID controllers discussed above anticipate and render the '972 Patent obvious because they include elements for "access control," as that term is used in the '972 Patent. The alleged invention of the '972 Patent can also be arrived at by starting with prior art U.S. Patents for storage routers and adding access controls. A listing of such prior art appears in Exhibits 1 and 22 and in Appendices B and C.

For example, U.S. Patent No. 5,748,924 (the '924 Patent) to Llorens, et al, filed October 17, 1995, issued May 5, 1998 is pertinent to discuss here, and a good reference to use for defining one such physical structure. As discussed above, 35 U.S.C. §303(a) authorizes the Patent Office to consider the Llorens prior art in a reexamination, even though this U.S. Patent was cited during the initial examination of the '972 Patent. The structure of Claim 1 in the '972 Patent is virtually identical to Fig. 1 of the '924 Patent shown below. (Exhibit 1).

'924 Patent to Llorens, Fig. 1

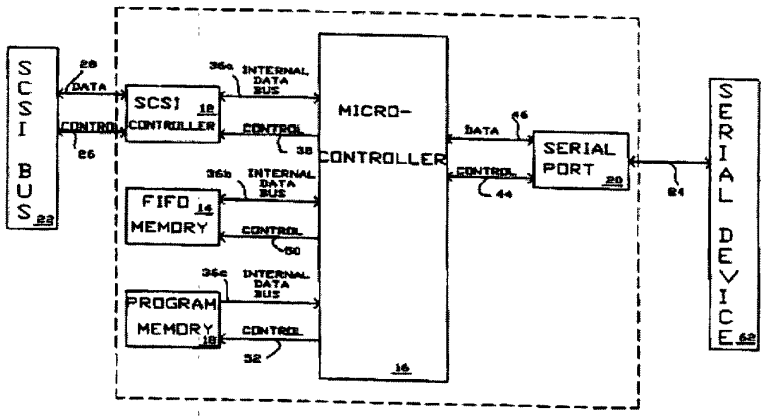

This figure identifies the same elements of the storage router depicted in Fig. 4 of the '972 Patent, such as a SCSI bus, Serial Device (Fibre Channel), and a memory (buffer). Even though a Fibre Channel controller is not explicitly shown in this figure, the written description makes it clear that the microprocessor and FIFO operate in conjunction to convert the parallel SCSI data into a serial format. Fibre Channel is a serial format, and the summary of the invention specifically references Fibre Channel as a serial format for use with the invention.

Below is Fig. 4 of the '972 Patent.

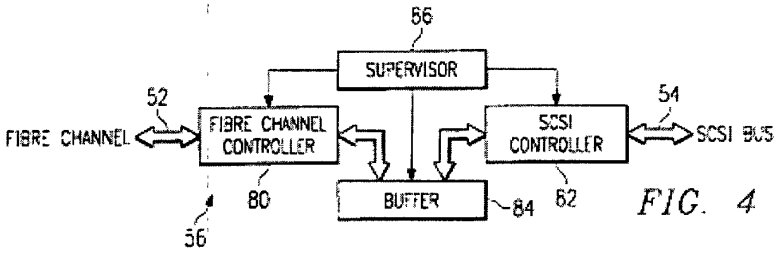

FIG. 4

The comparison between these two figures is striking. While Fig. 4 of the '972 Patent identifies data passing between the controllers and the buffer, it is important to note that this limitation is not present in Claim 1 of the '972 patent. This renders the functionality described by the two images to be nearly identical.

Oracle-Huawei-NetApp Ex. 1024, pg. 2405

The '924 Patent was referenced as prior art in the '972 Patent application by the Patentees. This shows that a person skilled in the art at the time, such as the Patentees, would have known that the '924 was a relevant and useful foundation from which to solve the problems identified supra by the Patentees.

The '924 Patent addresses an adapter for facilitating communications between a Fibre Channel device and a SCSI device. This was also well known as described above in reference to the patents issued to Chatwani and Arrowood. The '924 structure allows for Fibre Channel to SCSI interfacing using native low-level block protocols, as discussed above. The use of low-level block protocols was also known in the prior art as shown in the patents issued to Malladi and Berman, shown above and addressed the known issue of reducing data translation requests. Further, the patentees admitted that Figure 2 of the '972 Patent (showing a Fibre Channel to SCSI storage router) was prior art.

While the '924 Patent addresses a single device on each side of the adapter, the principal could be expanded to a number of such devices. This is true where, as here, part of the statement of the problem in the field as sworn to by the inventor of the '972 Patent addressed multiple devices. This would include multiple Fibre Channel devices cooperating with multiple SCSI storage units.

At the time of the '972 Patent Application, a person skilled in the art trying to solve the problem of addressability of devices (as identified by the patentees) would certainly have relied upon disclosures in the prior art referring to access control from such sources as the patents issued to Oeda, Yung, Hefferon, DeKoning, Abadi, Hunnicutt, Raz, and Dauerer discussed above. Access control could be combined with transparent bridging between Fibre Channel devices and SCSI devices, which was well known in the art. See U.S. Patent No. 5,802,278 to Isfeld, et al, above. This combination provides virtual local storage as defined in the '972 Patent. (Exhibit 1).

Access control is not limited to any single embodiment. As identified in the written description of the '972 Patent, "Storage router 56 allows the configuration and modification of the storage allocated to each attached workstation 58 through the use of mapping tables or other mapping techniques." '972 Patent, starting at Column 4, Line 7. The claims of the '972 Patent cover any mapping techniques, and not just tables or lists. As such, a person skilled in the art would have known of the numerous ways described above to achieve access control.

When viewing the teachings of the *Haugdahl* and *Bursky* articles, the Patentees sworn statements concerning issues that drove the field at the time of the alleged invention of the '972 Patent, and the numerous prior art references, it becomes clear that a person skilled in the art would have know to combine the references cited above and arrive at the '972 alleged invention.

Attorney Work Product

Claim 2

Claim 2 depends from claim 1 and states:

> 2. The storage router of claim 1, wherein the configuration maintained by the supervisor unit includes an allocation of subsets of storage space to associated Fibre Channel devices, wherein each subset is only accessible by the associated Fibre Channel device.

This claim specifies that each subset of storage space is only accessible by the associated Fibre Channel device.

This purported limitation is, however, just an aspect implied by the phrase "access controls" as found in Claim 1. If "access controls" mean "provides controls which limit a computer's access to a specific subset of storage devices or sections of a single storage device" (Exhibit 6, page 15), then limiting access to associate Fibre Channel devices is simply one form of access control.

Oracle-Huawei-NetApp Ex. 1024, pg. 2407

As discussed above with respect to Claim 1, the Maxstrat Gen5, CRD-5500 and IFT-3000 manuals all document exactly this kind of access control. Claim 2 is thus anticipated by the Gen5 RAID controller manuals, and rendered obvious by the CRD-5500 and IFT-3000 RAID controller manuals.

Claim 3.

Claim 3 depends from claim 2 and states:

> 3. The storage router of claim 2, wherein the Fibre Channel devices comprise workstations.

Patentees own admissions, supra, identify that it was well known in the art that workstations were used routinely in conjunction with Fibre Channel. In fact, the entire question of using a storage router would be moot if there were no workstations involved. This claim is squarely met in the prior art and a skilled person in the field would have found it obvious to connect workstations to the host (Fibre Channel) side of a storage router.

Claim 4.

Claim 4 depends from claim 2 and states:

> 4. The storage router of claim 2, wherein the SCSI storage devices comprise hard disk drives.

Again, the Patentees own admissions, supra, identify that SCSI storage devices were routinely in the prior art. A person skilled in the art would have found it obvious to connect a SCSI storage device to the SCSI side of a storage router.

Claim 5.

Claim 5 depends from claim 1 and states:

Oracle-Huawei-NetApp Ex. 1024, pg. 2408

5. The storage router of claim 1, wherein the Fibre Channel controller comprises:

a Fibre Channel (FC) protocol unit operable to connect to the Fibre Channel transport medium;

a first-in-first-out queue coupled to the Fibre Channel protocol unit; and

a direct memory access (DMA) interface coupled to the first-in-first-out queue and to the buffer.

The written description in the '972 Patent identifies a Tachyon HPFC-5000 Fibre Channel controller as part of an embodiment of the alleged invention; prior art. As such, the Tachyon would have a FC protocol unit, a first-in-first out queue coupled to the FC protocol unit, and a DMA. This claim merely provides further definition for the Fibre Channel controller limitation found in the invalid claim 1. Thus, Claim 5 is anticipated and rendered obvious by the prior art.

Claim 6.

Claim 6 depends from claim 1 and states:

6. The storage router of claim 1, wherein the SCSI controller comprises:

a SCSI protocol unit operable to connect to the SCSI bus transport medium;

an internal buffer coupled to the SCSI protocol unit; and

a direct memory access (DMA) interface coupled to the internal buffer and to the buffer of the storage router.

The written description in the '972 Patent identifies a SYMBIOS 53C8xx SCSI controller as part of an embodiment of the alleged invention, and the SYMBIOS controller was prior art at that time. Claim 6, like Claim 5, merely provides further definition for the SCSI controller limitation found in Claim 1.

Claim 7.

Claim 7 states:

7. A storage network, comprising:

Oracle-Huawei-NetApp Ex. 1024, pg. 2409

a Fibre Channel transport medium;

a SCSI bus transport medium;

a plurality of workstations connected to the Fibre Channel transport medium;

a plurality of SCSI storage devices connected to the SCSI bus transport medium; and

a storage router interfacing between the Fibre Channel transport medium and the SCSI bus transport medium, the storage router providing virtual local storage on the SCSI storage devices to the workstations and operable:

to map between the workstations and the SCSI storage devices;

to implement access controls for storage space on the SCSI storage devices; and

to allow access from the workstations to the SCSI storage devices using native low level, block protocol in accordance with the mapping and access controls.

Claim 7 identifies a "storage router" as a limitation. Since the patentees have chosen to define the phrase "storage router" in Claim 1, Claim 7 thus includes the storage router of Claim 1. Claim 7 is therefore the storage router of Claim 1 combined with Fibre Channel communication links, SCSI cables, Fibre Channel-capable workstations and SCSI storage devices.

The only thing claim 7 adds to the alleged invention of claim 1 are the Fibre Channel workstations, SCSI storage devices, and cables (transport media). These are the components that would naturally be required to use the alleged invention of Claim 1 in its ordinary, intended manner. In addition, Figure 2 generally depicts a storage network. Since Figure 2 is admitted to be prior art, the idea of a storage network is also admittedly prior art. Finally, the manuals and claim charts for the Gen5, CRD-5500 and IFT-3000 show that these products were intended to be used with workstations and disk drives. Thus, Claim 7 is anticipated and rendered obvious by the same prior art that anticipates Claim 1 and renders Claim 1 obvious.

Claim 8.

Claim 8 depends from claim 7 and states:

Oracle-Huawei-NetApp Ex. 1024, pg. 2410

8. The storage network of claim 7, wherein the access controls include an allocation of subsets of storage space to associated workstations, wherein each subset is only accessible by the associated workstation.

This claim merely restates the elements of Claim 2, but applied to Claim 7. Just as Claim 2 merely describes a prior-art aspect of "access control," so does Claim 8.

Claim 9.

Claim 9 depends from claim 7 and states:

9. The storage network of claim 7, wherein the SCSI storage devices comprise hard disk drives.

This claim merely restates the elements of Claim 4, but applied to Claim 7. Just as Claim 4 merely describes prior-art hard disk drives, so does Claim 9.

Claim 10.

Claim 10 depends from claim 7 and states:

10. The storage network of claim 7, wherein the storage router comprises:

a buffer providing memory work space for the storage router;

a Fibre Channel controller operable to connect to and interface with a Fibre Channel transport medium, the Fibre Channel controller further operable to pull outgoing data from the buffer and to place incoming data into the buffer;

a SCSI controller operable to connect to and interface with a SCSI bus transport medium, the SCSI controller further operable to pull outgoing data from the buffer and to place incoming data into the buffer; and

a supervisor unit coupled to the Fibre Channel controller, the SCSI controller and the buffer, the supervisor unit operable:

to maintain a configuration for the SCSI storage devices that maps between Fibre Channel devices and SCSI storage devices and that implements the access controls for storage space on the SCSI storage devices; and

Oracle-Huawei-NetApp Ex. 1024, pg. 2411

to process data in the buffer to interface between the Fibre Channel controller and the SCSI controller to allow access from workstations to SCSI storage devices in accordance with the configuration.

This claim merely restates the remaining elements of Claim 1 that were not expressly enumerated in Claim 7. These elements are clearly found in the Gen5, CRD-5500, and IFT-3000 RAID controllers, in the Tachyon and SYMBIOS controllers, as well as in many of the prior art U.S. Patents and articles describe in the appendices and exhibits.

Claim 11

Claim 11 states:

11. A method for providing virtual local storage on remote SCSI storage devices to Fibre Channel devices, comprising:
interfacing with a Fibre Channel transport medium;
interfacing with a SCSI bus transport medium;
maintaining a configuration for SCSI storage devices connected to the SCSI bus transport medium that maps between Fibre Channel devices and the SCSI storage devices and that implements access controls for storage space on the SCSI storage devices; and
allowing access from Fibre Channel initiator devices to SCSI storage devices using native low level, block protocol in accordance with the configuration.

This claim merely restates the limitations of Claim 1, but in the form of a method claim. As such, like Claim 1, this claim is anticipated and rendered obvious by the numerous cited examples of prior art. See Honeywell International, Inc. v. Universal Avionics Systems Corp, 288 F.Supp.2d 638 (D.Del. 2003).

Claim 12.

Claim 12 depends from claim 11 and states:

12. The method of claim 11, wherein maintaining the configuration includes allocating subsets of storage space to associated Fibre Channel devices, wherein each subset is only accessible by the associated Fibre Channel device.

Oracle-Huawei-NetApp Ex. 1024, pg. 2412

This claim merely restates the elements of Claim 2, but applied to Claim 11. Just as Claim 2 merely describes a prior-art aspect of "access control," so does Claim 12.

Claim 13.

Claim 13 depends from claim 12 and states:

> 13. The method of claim 12, wherein the Fibre Channel devices comprise workstations.

This claim merely restates the elements of Claim 3, but applied to Claim 12. Just as Claim 3 merely describes prior-art workstations, so does Claim 13.

Claim 14.

Claim 14 depends from claim 12 and states:

> 14. The method of claim 12, wherein the SCSI storage devices comprise hard disk drives.

This claim merely restates the elements of Claim 4, but applied to Claim 12. Just as Claim 4 merely describes prior-art hard disk drives, so does Claim 14.

As has been shown and amply demonstrated by the Maxstrat Gen5 manuals, all claims of the '972 Patent are anticipated under 35 U.S.C. §102 by printed publications. In addition, as demonstrated by the CRD-5500 manuals, IFT-3000 manuals, and numerous cited publications and U.S. Patents, all claims of the '972 Patent are also rendered obvious under 35 U.S.C. §103 by printed publications.

XII. THERE ARE NO SECONDARY CONSIDERATIONS THAT WOULD INDICATE THAT THE ALLEGED INVENTION WAS NOT OBVIOUS

Oracle-Huawei-NetApp Ex. 1024, pg. 2413

Secondary considerations for nonobviousness can include evidence of commercial success, long felt but unsolved needs, and failure of others. Graham v. John Deere Co., 383 U.S. 1, 17-18, 86 S.Ct. 684, 15 L.Ed.2d 545 (1966). As discussed above, there were no long felt but unsolved needs that the alleged invention addressed. Furthermore, there is no indication that others attempted and failed to arrive at the alleged invention.

As to commercial success, there must be a sufficient relationship, or "nexus," between the commercial success and the patented invention. Demaco Corp. v. F. Von Langsdorff Licensing Ltd., 851 F.2d 1387, 1392 (C.A.Fed.1988). "The term 'nexus' is often used, in this context, to designate a legally and factually sufficient connection between the proven success and the patented invention, such that the objective evidence should be considered in the determination of nonobviousness." Id at 1392. The burden of proof as to this connection or nexus resides with the Patentee. Id.

Crossroads, the assignee of the '972 Patent, has never manufactured a product that covers the '972 Patent. Crossroads has never even written the code necessary to implement access controls on a router. While Crossroads may contend that there has been licensing of the '972 Patent, there is no indication that any such licensing was a result of the invention as opposed to a desire on the part of the licensee to avoid the litigious bent of the Crossroads. There is no evidence of any nexus that any licensing was the result of the success of the alleged invention as embodied in the '972 Patent and market driven forces where a customer sought said invention. The Inventors have never made a router product that performs access controls, as described in the '972 Patent; in fact, they have never even written any software that can perform access controls. There is no indication of secondary considerations.

XIII. IN CONCLUSION, THE '972 PATENT IS INVALID AS BEING ANTICIPATED BY THE MAXSTRAT GEN5 AND AS BEING OBVIOUS IN LIGHT OF THE NUMEROUS MOTIVATIONS TO COMBINE AND THE VAST PRIOR ART

Oracle-Huawei-NetApp Ex. 1024, pg. 2414

The Maxstrat GEN5 satisfies every limitation that exists in the claims of the '972 Patent. Thus, the GEN5 anticipates the '972 Patent and therefore the '972 Patent is invalid. But for adding the Fibre Channel transport medium as a means of connecting hosts to a router device, the CRD-5500, IFT-3000 and Iceberg (as well as the DEC HSZ70) also anticipate the '972 Patent; the use of the Fibre Channel transport medium to connect hosts to a router device would have been obvious to one skilled in the art at the time of the '972 Patent.

The patentees have admitted under oath that the only inventive aspect of the '972 Patent was the movement of the "access controls" function from the network server into the router device. However, the combining of a storage router and access control and thereby arriving at the alleged invention of the '972 patent would have been obvious to one skilled in the art based on the numerous motivations to combine and the prior art references.

The motivation to combine elements in the field to arrive at a storage router with a Fibre-to-SCSI configuration that performs access controls is evident from the Patentees' sworn testimony as to the general needs known in the art at the time of the invention and the numerous suggestions and teachings found in the *Haugdahl* article and other prior art.

As to the question of obviousness, the existence of differences between prior art and the invention is not determinative. "But the mere existence of differences between the prior art and an invention does not establish the invention's nonobviousness. The gap between the prior art and respondent's system is simply not so great as to render the system nonobvious to one reasonably skilled in the art." Dann v. Johnston 425 U.S. 219, 230, 96 S.Ct. 1393, 1399 (U.S.Cust. & Pat.App.,1976)(a computer system case). In the present case, the gap is nonexistent due to the nature of the prior art and the clear motivation to combine. The '972 Patent is invalid as being anticipated and obvious.

Oracle-Huawei-NetApp Ex. 1024, pg. 2415

Appendix and Exhibit List for '972 Reexamination

Following is a description of the appendices and exhibits included herein.

Appendix A	Analysis of the meaning of claim terms of '972 Patent
Appendix B	Matrix of claim elements of '972 Patent found in prior art
Appendix C	Listing of possible prior art combinations showing obviousness

Exhibit 1	Copies of patents and printed publications relied upon	
Exhibit 2	Patent at issue (5,941,972)	
Exhibit 3	Certification of service	
Exhibit 4	Differences between claims of '972, '036, '035 and '854 Patents	
Exhibit 5	Motion for Summary Judgment, *Crossroads v. Dot Hill*	
	MSJ Exhibits 3, 4 & 5	Declarations of DEC HSZ70 inventor & witnesses
	MSJ Exhibits 6, 7 & 8	DEC HSZ70 Manuals
	MSJ Exhibit 11	DEC HSZ70 Software excerpt
	MSJ Exhibit 15	Chart comparing DEC HSZ70 with claims of '035 Patent
Exhibit 6	Markman Order, *Crossroads v. Chaparral*	
Exhibit 7	*Marlow* case	
Exhibit 8	*McGaughey* case	
Exhibit 9	Trial transcript of Hoese, *Crossroads v. Chaparral*	
Exhibit 10	Chart comparing Gen5 with claims of '972 Patent	
Exhibit 11	Gen5 System Guide	
Exhibit 12	Gen5 GUI User's Guide	
Exhibit 13	Declaration that Gen5 configuration was available	
Exhibit 14	CRD-5500 User's Manual	
Exhibit 15	Chart comparing IFT-3000 with claims of '972 Patent	
Exhibit 16	IFT-3000 Instruction Manual	
Exhibit 17	*Flasck* case	
Exhibit 18	*Haugdahl* article	
Exhibit 19	*Bursky* article	
Exhibit 20	Deposition of Hoese, *Crossroads v. Chaparral*	
Exhibit 21	Trial transcript of Russell, *Crossroads v. Chaparral*	
Exhibit 22	Charts comparing prior art with claims of '972 Patent	

Oracle-Huawei-NetApp Ex. 1024, pg. 2416

We respectfully request that reexamination of U.S. Patent No. 5,941,972 be undertaken based upon the substantial new question of Patentability raised herein.

July 19, 2004

Respectfully submitted,
Wang & Patel, PC
1301 Dove Street, Suite 1050
Newport Beach CA 92660
(949) 833-8483

Natu J. Patel
Reg. No. 39559

Enclosures:

- Transmittal Form PTO/SB/57
- Appendices A, B and C
- Exhibits 1 through 22
- Check for $2,520.00, Check no.: 3405

I hereby certify that this is being deposited with the U.S. Postal Service "Express Mail Post Office to Addressee" service under 37 CFR § 1.10 on the date indicated below and is addressed to: Mail Stop Ex Parte Reexam, Commissioner for Patents, P.O. Box 1450, Alexandria, VA 22313-1450 on July 19, 2004. Express Mail Label Nos.: **EO 904 389 855 US (box 1) and EO 904 389 815 US (box 2)**.

Dated: July 19, 2004 Signed

Print Name: Larry E. Severin

PTO/SB/21 (09-04)
Approved for use through 07/31/2006. OMB 0651-0031
U.S. Patent and Trademark Office; U.S. DEPARTMENT OF COMMERCE

Oracle-Huawei-NetApp Ex. 1024, pg. 2417

APPENDICES

- APPENDIX A
- APPENDIX B
- APPENDIX C

APPENDIX A

Oracle-Huawei-NetApp Ex. 1024, pg. 2419

5,941,972 Patent Claim 1	Definition of limitation	Patentee's Admissions and the Prior Art
What is claimed is: 1. A storage router for providing	"Storage router". A device which provides virtual local storage, maps, implements access controls, and allows access using native low level block protocols, and which forwards data from devices (such as a personal computer) connected on one side of the router, through the router, to storage devices connected on the other side of the storage router. *Chaparral* Markman Order	"Storage router" Admission by patentee. Trial transcript of Hoese. Page 81, starting at line 3. Q. Figure – well, figure 2 is not your invention, right, sir? A. Figure 2 is not my invention. Q. And this description is in reference to figure 2, and this description mentions native low-level block protocols and mentions mapping, and you say figure 2 is not your invention? A. That's correct. By admission of the patentee, mapping and low-level block protocol are not the patentee's invention. They are, by admission, part of the prior art. "Access control" The specification discloses aspects of a distributed security system in which access to system resources is controlled by access control lists associated with each system resource. U.S. Patent No. 5,315,657 to Abadi, et al. Issued: May 24, 1994 Filed: September 28, 1990 Access control lists are used to define the extent to which different users will be allowed access to different resources on a server..... Depending on the level of access control implemented on a given

Oracle-Huawei-NetApp Ex. 1024, pg. 2420

		server, access control lists for a given disk defines the access restrictions for all the resources or files stored on that disk. U.S. Pat. No. 5,889,952 To Hunnicutt, et al Issued: March 30, 1999 Filed: August 14, 1996 Under the "STATEMENT OF THE PROBLEM" as part of prior art as of the filing date of August 14, 1996. Each host processor has exclusive access to its own set of storage devices and it cannot access the storage device of another host. U.S. Pat. No. 5,860,137 To Raz, et al Issued: January 12, 1999 Filed: July 21, 1995 Under the "BACKGROUND OF THE INVENTION" As part of prior art as of the filing date of July 21, 1995 These groups of files from virtual disks, sometimes referred to as mini-disks, which for purposes of this description are identified by a number. A list of authorized users must exist for each mini-disk. U.S. Pat. No. 5,469,576 To Dauerer, et al Issued: November 21, 1995 Filed: March 22, 1993 "Virtual local storage" Admission by patentee. Trial transcript of Hoese. Page 81, starting at line 3. Q. Figure – well, figure 2 is not your invention, right, sir? A. Figure 2 is not my invention.

Oracle-Huawei-NetApp Ex. 1024, pg. 2421

		In regards to Fig. 2, "A storage router 44 then serves to interconnect these mediums and provide devices on either medium global, transparent access to devices on the other medium." '972 patent,, Col. 3 starting at line 32. By admission of the patentee, transparent access to devices is in the prior art.
virtual local storage on	"Virtual local storage". A specific subset of overall data, stored in storage devices that are indirectly connected to and capable of physical separation from the devices connected to the first transport medium, which has the appearance and characteristics of storage on a device directly connected or contained within the workstation. *Chaparral* Markman Order.	"Virtual local storage" Admission by patentee. Trial transcript of Hoese. Page 81, starting at line 3. Q. Figure – well, figure 2 is not your invention, right, sir? B. Figure 2 is not my invention. In regards to Fig. 2, "A storage router 44 then serves to interconnect these mediums and provide devices on either medium global, transparent access to devices on the other medium." '972 patent,, Col. 3 starting at line 32. By admission of the patentee, transparent access to devices is in the

Oracle-Huawei-NetApp Ex. 1024, pg. 2422

		prior art. "Access control" The specification discloses aspects of a distributed security system in which access to system resources is controlled by access control lists associated with each system resource. U.S. Patent No. 5,315,657 to Abadi, et al. Issued: May 24, 1994 Filed: September 28, 1990 Access control lists are used to define the extent to which different users will be allowed access to different resources on a server..... Depending on the level of access control implemented on a given server, access control lists for a given disk defines the access restrictions for all the resources or files stored on that disk. U.S. Pat. No. 5,889,952 To Hunnicutt, et al Issued: March 30, 1999 Filed: August 14, 1996 Under the "STATEMENT OF THE PROBLEM" as part of prior art as of the filing date of August 14, 1996. Each host processor has exclusive access to its own set of storage devices and it cannot access the storage device of another host. U.S. Pat. No. 5,860,137 To Raz, et al Issued: January 12, 1999 Filed: July 21, 1995 Under the "BACKGROUND OF THE INVENTION" As part of prior art as of the filing date of July 21, 1995 These groups of files from virtual

		disks, sometimes referred to as mini-disks, which for purposes of this description are identified by a number. A list of authorized users must exist for each mini-disk. U.S. Pat. No. 5,469,576 To Dauerer, et al Issued: November 21, 1995 Filed: March 22, 1993
remote	"Remote" Indirectly connected and capable of physical separation. *Chaparral* Markman Order.	"Remote" Admission by patentee. Trial transcript of Hoese. Page 81, starting at line 3. Q. Figure – well, figure 2 is not your invention, right, sir? C. Figure 2 is not my invention. Fig. 2 shows indirectly connected and separate storage devices.
SCSI storage devices to Fibre Channel devices, comprising:		"Storage devices" Admission by patentee. Trial transcript of Hoese. Page 81, starting at line 3. Q. Figure – well, figure 2 is not your invention, right, sir? D. Figure 2 is not my invention. Fig. 2 shows storage devices.

a buffer providing memory work space for the storage router;	A buffer is a memory device that is utilized to temporarily hold data. *Chaparral* Markman Order.	U.S. Patent No. 5,748,924 to Llorens, et al, filed October 17, 1995, issued May 5, 1998.
a Fibre Channel controller operable to connect to and interface with a Fibre Channel transport medium;	A device that interfaces with a Fibre Channel transport medium. *Chaparral* Markman Order.	U.S. Patent No. 5,748,924 to Llorens, et al, filed October 17, 1995, issued May 5, 1998.
a SCSI controller operable to connect to and interface with a SCSI bus transport medium; and	A device that interfaces with a SCSI bus transport medium. *Chaparral* Markman Order.	U.S. Patent No. 5,748,924 to Llorens, et al, filed October 17, 1995, issued May 5, 1998.
a supervisor unit coupled to the Fibre Channel controller, the SCSI controller and the buffer, the supervisor unit operable to	A microprocessor programmed to process data in a buffer in order to map between devices connected to the first transport medium and storage devices and which implements access controls. *Chaparral* Markman Order.	U.S. Patent No. 5,748,924 to Llorens, et al, filed October 17, 1995, issued May 5, 1998.
Maintain a configuration for SCSI storage devices connected to the SCSI bus transport medium that	Keeping a modifiable setting of information. *Chaparral* Markman Order.	
Maps between Fibre Channel devices connected to the Fibre	To create a path from a device on one side of the storage router to a device on the other side of the router, i.e. from a Fibre	Admission by patentee. Trial transcript of Hoese. Page 81, starting at line 3.

Channel transport medium and the SCSI storage devices, and that	Channel device to a SCSI device (or vice-versa). A "map" contains a representation of devices on each side of the storage router, so that when a device on one side of the storage router wants to communicate with a device on the other side of the storage router, storage router can connect the devices. *Chaparral* Markman Order.	Q. Figure – well, figure 2 is not your invention, right, sir? R. Figure 2 is not my invention. Q. And this description is in reference to figure 2, and this description mentions native low-level block protocols and mentions mapping, and you say figure 2 is not your invention? A. That's correct. By admission of the patentee, mapping is not part of the invention and is part of the prior art. As to a map, "Storage router 44 uses tables to map devices from one medium to the other and distributes requests and data across Fiber Channel 32 and SCSI bus 34 without any security access controls." '972 patent,, Col. 3 starting at line 50. U.S. Patent No. 5,748,924 to Llorens , et al, filed October 17, 1995, issued May 5, 1998.
implements access controls for storage space on the storage devices and	The phrase "implements access controls for storage space on the SCSI storage devices" means provides controls which limit a computer's access to a specific subset of storage devices or sections of a single storage devices. *Chaparral* Markman Order.	"Access control" The specification discloses aspects of a distributed security system in which access to system resources is controlled by access control lists associated with each system resource. U.S. Patent No. 5,315,657 to Abadi, et al. Issued: May 24, 1994 Filed: September 28, 1990 Access control lists are used to define the extent to which different

		users will be allowed access to different resources on a server..... Depending on the level of access control implemented on a given server, access control lists for a given disk defines the access restrictions for all the resources or files stored on that disk. U.S. Pat. No. 5,889,952 To Hunnicutt, et al Issued: March 30, 1999 Filed: August 14, 1996 Under the "STATEMENT OF THE PROBLEM" as part of prior art as of the filing date of August 14, 1996. Each host processor has exclusive access to its own set of storage devices and it cannot access the storage device of another host. U.S. Pat. No. 5,860,137 To Raz, et al Issued: January 12, 1999 Filed: July 21, 1995 Under the "BACKGROUND OF THE INVENTION" As part of prior art as of the filing date of July 21, 1995 These groups of files from virtual disks, sometimes referred to as mini-disks, which for purposes of this description are identified by a number. A list of authorized users must exist for each mini-disk. U.S. Pat. No. 5,469,576 To Dauerer, et al Issued: November 21, 1995 Filed: March 22, 1993
to process data in the buffer to interface between the Fibre Channel		U.S. Patent No. 5,748,924 to Llorens, et al, filed October 17, 1995, issued May 5, 1998.

controller and the SCSI controller to allow access from Fibre Channel initiator devices to SCSI storage devices using native low level, block protocols in accordance with the configuration.		

APPENDIX B

Exhibit 1024, pg. 2429

Infortrend 103 Obviousness Claim Comparison Chart for Patent No. '972

Independent Claim 1 Elements

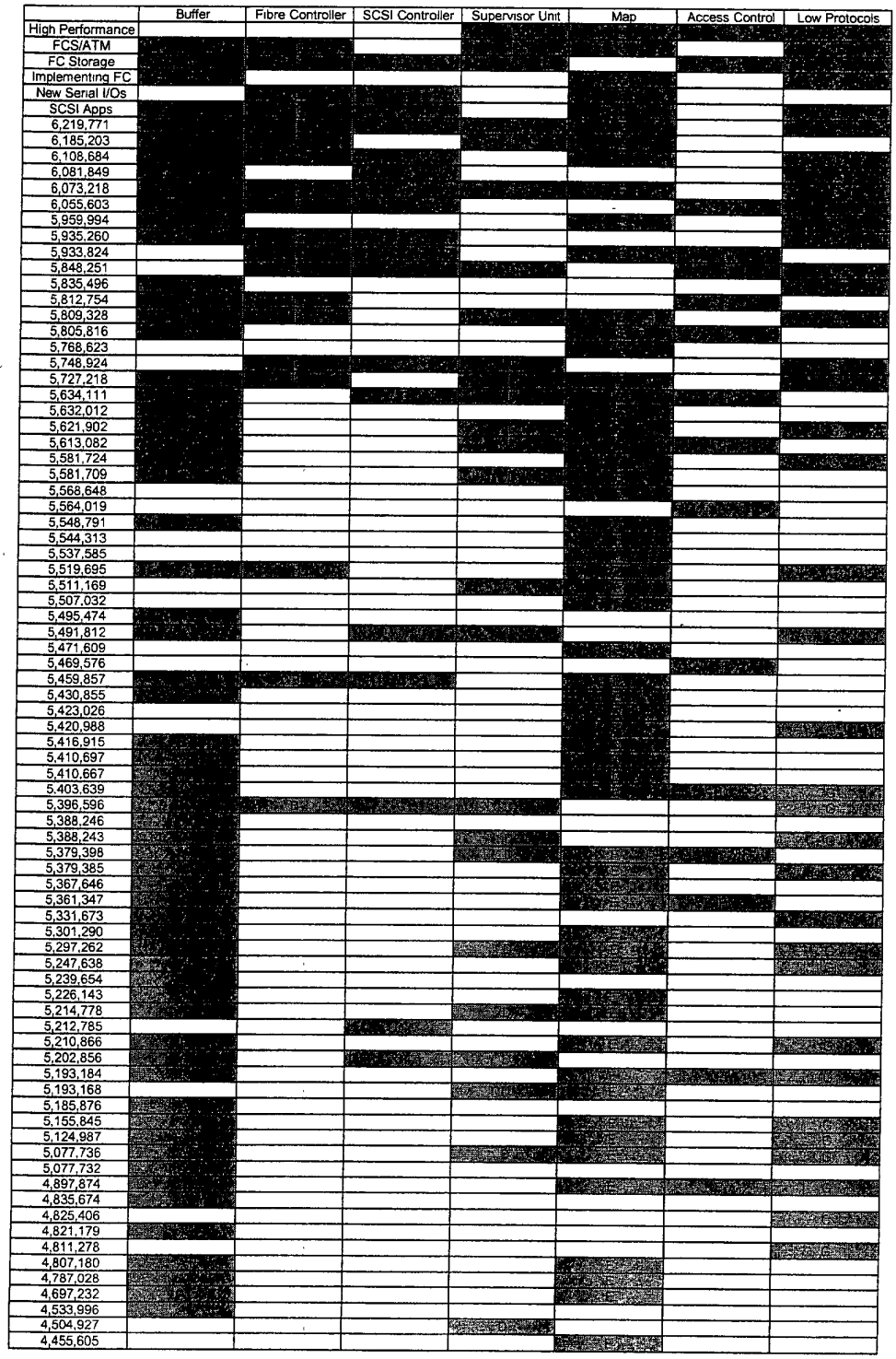

Highly Confidential

APPENDIX C

Oracle-Huawei-NetApp Ex. 1024, pg. 2431

Combinations of Prior Art
Forming a Basis for Rejection under 35 U.S.C. §103 for
Claim 1 of U.S. Patent No. 5,941,972

The chart following in the next pages shows how U.S. patents and other printed publications may be combined to form a basis for rejection of U.S. Patent No. 5,941,972 ("the '972 Patent") under 35 U.S.C. §103.

All U.S. patents listed here were filed before the filing date of the '972, which is December 31, 1997. All printed publications listed here that are not U.S. patents were published before the subject matter disclosed in the '972 Patent was invented, and thus are available as prior art under 35 U.S.C. §102(a). Some of these U.S. patents and printed publications were published more than one year before the '972 Patent was filed, and thus are also available as prior art under 35 U.S.C. §102(b).

Each primary prior art reference is listed in the chart as "Primary Reference," followed on the same line by a code listed as "Claim Elements" describing which claim elements are present in that primary prior art reference. For each primary prior art reference, a list of secondary prior art references are listed as "Secondary References" with an accompanying "Claim Elements" code describing which claim elements are present in that secondary prior art reference. When the primary art reference is combined with any one of the secondary prior art references, all elements of Claim 1 are met so as to support invalidation of Claim 1 of the '972 Patent under 35 U.S.C. §103.

Here are the claim element codes, a short paraphrased description in parentheses, and the corresponding portions of Claim 1 of the '972 Patent:

-	"1. A storage router for providing virtual local storage on remote SCSI storage devices to Fibre Channel devices, comprising:"
A	**(Buffer)** "a buffer providing memory work space for the storage router;"
B	**(Fibre Channel Controller)** "a Fibre Channel controller operable to connect to and interface with a Fibre Channel transport medium;"
C	**(SCSI Controller)** "a SCSI controller operable to connect to and interface with a SCSI bus transport medium; and"
D	**(Supervisor Unit)** "a supervisor unit coupled to the Fibre Channel controller, the SCSI controller and the buffer, the supervisor unit operable:"
E	**(Map)** "to maintain a configuration for SCSI storage devices connected to the SCSI bus transport medium that maps between Fibre Channel devices and SCSI storage devices"

Oracle-Huawei-NetApp Ex. 1024, pg. 2432

F	**(Access Control)** "and that implements access controls for storage space on the SCSI storage devices; and"
-	"to process data in the buffer to interface between the Fibre Channel controller and the SCSI controller to allow access from Fibre Channel initiator devices to SCSI storage devices"
G	**(Low Protocols)** "using native low level, block protocol in accordance with the configuration."

This breakdown of elements is the same as that used in the analysis of Claim 1 in Appendix B and Exhibit 22, where the specific portions of the prior art references are related to elements of claims of the '972 Patent. The preamble to Claim 1 does not have a claim element code, because the preamble is not a limitation. The "to process the data ..." portion of claim 1 also does not have a claim element code, because this aspect is a natural and obvious consequence of being a storage router as described, and thus does not represent an independent limitation of Claim 1.

For example, Appendix B shows that U.S. Patent No. 6,219,771 has elements A, B, C, D, E, and G, but possibly not element F. The section of the detailed matrix in Exhibit 22 for U.S. Patent No. 6,219,771 includes specific references that meet many elements of Claim 1 of the '972 Patent, but no reference is listed for claim element F for Access Control. This means that U.S. Patent No. 6,219,771 may be combined with another prior art reference that includes a description of Access Control to support a 35 U.S.C. §103 rejection. Therefore, in the chart in this Exhibit, the Primary Reference entry for U.S. Patent No. 6,219,771 is followed by claim element codes ABCDEG. Listed below this primary reference is a list of several secondary prior art references that all include at least claim element F, so that any of these secondary pieces of prior art can be combined with U.S. Patent No. 6,219,771 to describe all the elements of Claim 1 and thereby render Claim 1 of the '972 Patent obvious.

Oracle-Huawei-NetApp Ex. 1024, pg. 2433

5,941,972 Obviousness Combinations (need ABCDEFG)

Primary Reference: SCSI applications on Fibre *Claim Elements: ABCEG*

Secondary References	Claim Elements
High-Performance Data ...	DEFG
Fibre channel storage ...	ABCDFG
5,848,251	BCDFG
5,634,111	ACDEF
5,613,082	ADEF
5,379,398	ADEF

Primary Reference: New Serial I/Os Speed ... *Claim Elements: BCE*

Secondary References	Claim Elements
Fibre channel storage ...	ABCDFG

Primary Reference: Implementing a Fibre ... *Claim Elements: AEG*

Secondary References	Claim Elements
Fibre channel storage ...	ABCDFG
5,848,251	BCDFG

Primary Reference: High-Performance Data ... *Claim Elements: DEFG*

Secondary References	Claim Elements
SCSI applications on Fibre...	ABCEG
Fibre channel storage ...	ABCDFG
6,219,771	ABCDEG
6,055,603	ABCFG
5,935,260	ABCG
5,459,857	ABCE
5,396,596	ABCDG

Primary Reference: Fibre channel storage ... *Claim Elements: ABCDFG*

Secondary References	Claim Elements
SCSI applications on Fibre...	ABCEG

Oracle-Huawei-NetApp Ex. 1024, pg. 2434

New Serial I/Os Speed ...	BCE
Implementing a Fibre ...	AEG
High-Performance Data ...	DEFG
Fiber Channel (FCS)/ATM ...	ABDEG
6,219,771	ABCDEG
6,185,203	ABDE
5,959,994	AEG
5,809,328	ABDEG
5,805,816	AEF
5,768,623	E
5,727,218	ABDEG
5,634,111	ACDEF
5,632,012	AE
5,621,902	ADEG
5,613,082	ADEF
5,581,724	AEG
5,581,709	ADE
5,568,648	E
5,548,791	AE
5,544,313	E
5,537,585	E
5,519,695	ABEG
5,511,169	DE
5,507,032	E
5,471,609	E
5,459,857	ABCE
5,430,855	AE
5,423,026	E
5,420,988	EG
5,416,915	AE
5,410,697	AE

Oracle-Huawei-NetApp Ex. 1024, pg. 2435

5,410,667	AE
5,403,639	AEFG
5,379,398	ADEF
5,379,385	AEG
5,367,646	AE
5,361,347	AEF
5,301,290	AE
5,297,262	ADEG
5,247,638	AEG
5,226,143	AE
5,214,778	ADE
5,210,866	AEG
5,193,184	AEFG
5,193,168	DE
5,155,845	AEG
5,124,987	AEG
5,077,736	ADEG
4,897,874	AEFG
4,807,180	AE
4,787,028	AE
4,697,232	AE
4,455,605	E

Primary Reference: Fiber Channel (FCS)/ATM *Claim Elements: ABDEG*

Secondary References	Claim Elements
Fibre channel storage …	ABCDFG
6,055,603	ABCFG
5,848,251	BCDFG
5,634,111	ACDEF

Primary Reference: 6,219,771 *Claim Elements: ABCDEG*

Secondary References	Claim Elements
High-Performance Data …	DEFG

Oracle-Huawei-NetApp Ex. 1024, pg. 2436

Fibre channel storage ...	ABCDFG
6,055,603	ABCFG
5,848,251	BCDFG
5,812,754	ABF
5,805,816	AEF
5,634,111	ACDEF
5,613,082	ADEF
5,564,019	F
5,469,576	F
5,403,639	AEFG
5,379,398	ADEF
5,361,347	AEF
5,193,184	AEFG
4,897,874	AEFG

Primary Reference: 6,185,203 *Claim Elements: ABDE*

Secondary References	Claim Elements
Fibre channel storage ...	ABCDFG
6,055,603	ABCFG
5,848,251	BCDFG

Primary Reference: 6,055,603 *Claim Elements: ABCFG*

Secondary References	Claim Elements
High-Performance Data ...	DEFG
Fiber Channel (FCS)/ATM ...	ABDEG
6,219,771	ABCDEG
6,185,203	ABDE
5,809,328	ABDEG
5,727,218	ABDEG
5,634,111	ACDEF
5,621,902	ADEG
5,613,082	ADEF
5,581,709	ADE

Oracle-Huawei-NetApp Ex. 1024, pg. 2437

5,511,169	DE
5,379,398	ADEF
5,297,262	ADEG
5,214,778	ADE
5,193,168	DE
5,077,736	ADEG

Primary Reference: 5,959,994 *Claim Elements: AEG*

Secondary References	Claim Elements
Fibre channel storage ...	ABCDFG
5,848,251	BCDFG

Primary Reference: 5,935,260 *Claim Elements: ABCG*

Secondary References	Claim Elements
High-Performance Data ...	DEFG
5,634,111	ACDEF
5,613,082	ADEF
5,379,398	ADEF

Primary Reference: 5,848,251 *Claim Elements: BCDFG*

Secondary References	Claim Elements
SCSI applications on Fibre...	ABCEG
Implementing a Fibre ...	AEG
Fiber Channel (FCS)/ATM ...	ABDEG
6,219,771	ABCDEG
6,185,203	ABDE
5,959,994	AEG
5,809,328	ABDEG
5,805,816	AEF
5,727,218	ABDEG
5,634,111	ACDEF
5,632,012	AE
5,621,902	ADEG

Oracle-Huawei-NetApp Ex. 1024, pg. 2438

5,613,082	ADEF
5,581,724	AEG
5,581,709	ADE
5,548,791	AE
5,519,695	ABEG
5,459,857	ABCE
5,430,855	AE
5,416,915	AE
5,410,697	AE
5,410,667	AE
5,403,639	AEFG
5,379,398	ADEF
5,379,385	AEG
5,367,646	AE
5,361,347	AEF
5,301,290	AE
5,297,262	ADEG
5,247,638	AEG
5,226,143	AE
5,214,778	ADE
5,210,866	AEG
5,193,184	AEFG
5,155,845	AEG
5,124,987	AEG
5,077,736	ADEG
4,897,874	AEFG
4,807,180	AE
4,787,028	AE
4,697,232	AE

Primary Reference: 5,812,754 *Claim Elements: ABF*

Secondary References **Claim Elements**

Oracle-Huawei-NetApp Ex. 1024, pg. 2439

6,219,771	ABCDEG

Primary Reference: 5,809,328 *Claim Elements: ABDEG*

Secondary References	Claim Elements
Fibre channel storage …	ABCDFG
6,055,603	ABCFG
5,848,251	BCDFG
5,634,111	ACDEF

Primary Reference: 5,805,816 *Claim Elements: AEF*

Secondary References	Claim Elements
Fibre channel storage …	ABCDFG
6,219,771	ABCDEG
5,848,251	BCDFG
5,748,924	BCDG
5,396,596	ABCDG

Primary Reference: 5,768,623 *Claim Elements: E*

Secondary References	Claim Elements
Fibre channel storage …	ABCDFG

Primary Reference: 5,748,924 *Claim Elements: BCDG*

Secondary References	Claim Elements
5,805,816	AEF
5,634,111	ACDEF
5,613,082	ADEF
5,403,639	AEFG
5,379,398	ADEF
5,361,347	AEF
5,193,184	AEFG
4,897,874	AEFG

Primary Reference: 5,727,218 *Claim Elements: ABDEG*

Secondary References	Claim Elements

Oracle-Huawei-NetApp Ex. 1024, pg. 2440

Fibre channel storage …	ABCDFG
6,055,603	ABCFG
5,848,251	BCDFG
5,634,111	ACDEF

Primary Reference: 5,634,111 *Claim Elements: ACDEF*

Secondary References	Claim Elements
SCSI applications on Fibre…	ABCEG
Fibre channel storage …	ABCDFG
Fiber Channel (FCS)/ATM …	ABDEG
6,219,771	ABCDEG
6,055,603	ABCFG
5,935,260	ABCG
5,848,251	BCDFG
5,809,328	ABDEG
5,748,924	BCDG
5,727,218	ABDEG
5,519,695	ABEG
5,396,596	ABCDG

Primary Reference: 5,632,012 *Claim Elements: AE*

Secondary References	Claim Elements
Fibre channel storage …	ABCDFG
5,848,251	BCDFG

Primary Reference: 5,621,902 *Claim Elements: ADEG*

Secondary References	Claim Elements
Fibre channel storage …	ABCDFG
6,055,603	ABCFG
5,848,251	BCDFG

Primary Reference: 5,613,082 *Claim Elements: ADEF*

Secondary References	Claim Elements
SCSI applications on Fibre…	ABCEG

Oracle-Huawei-NetApp Ex. 1024, pg. 2441

Fibre channel storage ...	ABCDFG
6,219,771	ABCDEG
6,055,603	ABCFG
5,935,260	ABCG
5,848,251	BCDFG
5,748,924	BCDG
5,396,596	ABCDG

Primary Reference: 5,581,724 *Claim Elements: AEG*

Secondary References	Claim Elements
Fibre channel storage ...	ABCDFG
5,848,251	BCDFG

Primary Reference: 5,581,709 *Claim Elements: ADE*

Secondary References	Claim Elements
Fibre channel storage ...	ABCDFG
6,055,603	ABCFG
5,848,251	BCDFG

Primary Reference: 5,568,648 *Claim Elements: E*

Secondary References	Claim Elements
Fibre channel storage ...	ABCDFG

Primary Reference: 5,564,019 *Claim Elements: F*

Secondary References	Claim Elements
6,219,771	ABCDEG

Primary Reference: 5,548,791 *Claim Elements: AE*

Secondary References	Claim Elements
Fibre channel storage ...	ABCDFG
5,848,251	BCDFG

Primary Reference: 5,544,313 *Claim Elements: E*

Secondary References	Claim Elements
Fibre channel storage ...	ABCDFG

Oracle-Huawei-NetApp Ex. 1024, pg. 2442

Primary Reference: 5,537,585 *Claim Elements: E*

Secondary References	Claim Elements
Fibre channel storage ...	ABCDFG

Primary Reference: 5,519,695 *Claim Elements: ABEG*

Secondary References	Claim Elements
Fibre channel storage ...	ABCDFG
5,848,251	BCDFG
5,634,111	ACDEF

Primary Reference: 5,511,169 *Claim Elements: DE*

Secondary References	Claim Elements
Fibre channel storage ...	ABCDFG
6,055,603	ABCFG

Primary Reference: 5,507,032 *Claim Elements: E*

Secondary References	Claim Elements
Fibre channel storage ...	ABCDFG

Primary Reference: 5,471,609 *Claim Elements: E*

Secondary References	Claim Elements
Fibre channel storage ...	ABCDFG

Primary Reference: 5,469,576 *Claim Elements: F*

Secondary References	Claim Elements
6,219,771	ABCDEG

Primary Reference: 5,459,857 *Claim Elements: ABCE*

Secondary References	Claim Elements
High-Performance Data ...	DEFG
Fibre channel storage ...	ABCDFG
5,848,251	BCDFG

Primary Reference: 5,430,855 *Claim Elements: AE*

Secondary References	Claim Elements

Oracle-Huawei-NetApp Ex. 1024, pg. 2443

Fibre channel storage ...	ABCDFG
5,848,251	BCDFG

Primary Reference: 5,423,026 *Claim Elements: E*

Secondary References	Claim Elements
Fibre channel storage ...	ABCDFG

Primary Reference: 5,420,988 *Claim Elements: EG*

Secondary References	Claim Elements
Fibre channel storage ...	ABCDFG

Primary Reference: 5,416,915 *Claim Elements: AE*

Secondary References	Claim Elements
Fibre channel storage ...	ABCDFG
5,848,251	BCDFG

Primary Reference: 5,410,697 *Claim Elements: AE*

Secondary References	Claim Elements
Fibre channel storage ...	ABCDFG
5,848,251	BCDFG

Primary Reference: 5,410,667 *Claim Elements: AE*

Secondary References	Claim Elements
Fibre channel storage ...	ABCDFG
5,848,251	BCDFG

Primary Reference: 5,403,639 *Claim Elements: AEFG*

Secondary References	Claim Elements
Fibre channel storage ...	ABCDFG
6,219,771	ABCDEG
5,848,251	BCDFG
5,748,924	BCDG
5,396,596	ABCDG

Primary Reference: 5,396,596 *Claim Elements: ABCDG*

Oracle-Huawei-NetApp Ex. 1024, pg. 2444

Secondary References	Claim Elements
High-Performance Data ...	DEFG
5,805,816	AEF
5,634,111	ACDEF
5,613,082	ADEF
5,403,639	AEFG
5,379,398	ADEF
5,361,347	AEF
5,193,184	AEFG
4,897,874	AEFG

Primary Reference: 5,379,398 *Claim Elements: ADEF*

Secondary References	Claim Elements
SCSI applications on Fibre...	ABCEG
Fibre channel storage ...	ABCDFG
6,219,771	ABCDEG
6,055,603	ABCFG
5,935,260	ABCG
5,848,251	BCDFG
5,748,924	BCDG
5,396,596	ABCDG

Primary Reference: 5,379,385 *Claim Elements: AEG*

Secondary References	Claim Elements
Fibre channel storage ...	ABCDFG
5,848,251	BCDFG

Primary Reference: 5,367,646 *Claim Elements: AE*

Secondary References	Claim Elements
Fibre channel storage ...	ABCDFG
5,848,251	BCDFG

Primary Reference: 5,361,347 *Claim Elements: AEF*

Secondary References	Claim Elements

Oracle-Huawei-NetApp Ex. 1024, pg. 2445

Fibre channel storage …	ABCDFG
6,219,771	ABCDEG
5,848,251	BCDFG
5,748,924	BCDG
5,396,596	ABCDG

Primary Reference: 5,301,290 *Claim Elements: AE*

Secondary References	Claim Elements
Fibre channel storage …	ABCDFG
5,848,251	BCDFG

Primary Reference: 5,297,262 *Claim Elements: ADEG*

Secondary References	Claim Elements
Fibre channel storage …	ABCDFG
6,055,603	ABCFG
5,848,251	BCDFG

Primary Reference: 5,247,638 *Claim Elements: AEG*

Secondary References	Claim Elements
Fibre channel storage …	ABCDFG
5,848,251	BCDFG

Primary Reference: 5,226,143 *Claim Elements: AE*

Secondary References	Claim Elements
Fibre channel storage …	ABCDFG
5,848,251	BCDFG

Primary Reference: 5,214,778 *Claim Elements: ADE*

Secondary References	Claim Elements
Fibre channel storage …	ABCDFG
6,055,603	ABCFG
5,848,251	BCDFG

Primary Reference: 5,210,866 *Claim Elements: AEG*

Secondary References	Claim Elements

Oracle-Huawei-NetApp Ex. 1024, pg. 2446

Fibre channel storage ...	ABCDFG
5,848,251	BCDFG

Primary Reference: 5,193,184 *Claim Elements: AEFG*

Secondary References	Claim Elements
Fibre channel storage ...	ABCDFG
6,219,771	ABCDEG
5,848,251	BCDFG
5,748,924	BCDG
5,396,596	ABCDG

Primary Reference: 5,193,168 *Claim Elements: DE*

Secondary References	Claim Elements
Fibre channel storage ...	ABCDFG
6,055,603	ABCFG

Primary Reference: 5,155,845 *Claim Elements: AEG*

Secondary References	Claim Elements
Fibre channel storage ...	ABCDFG
5,848,251	BCDFG

Primary Reference: 5,124,987 *Claim Elements: AEG*

Secondary References	Claim Elements
Fibre channel storage ...	ABCDFG
5,848,251	BCDFG

Primary Reference: 5,077,736 *Claim Elements: ADEG*

Secondary References	Claim Elements
Fibre channel storage ...	ABCDFG
6,055,603	ABCFG
5,848,251	BCDFG

Primary Reference: 4,897,874 *Claim Elements: AEFG*

Secondary References	Claim Elements
Fibre channel storage ...	ABCDFG

Oracle-Huawei-NetApp Ex. 1024, pg. 2447

6,219,771	ABCDEG
5,848,251	BCDFG
5,748,924	BCDG
5,396,596	ABCDG

Primary Reference: 4,807,180 *Claim Elements: AE*

Secondary References	Claim Elements
Fibre channel storage …	ABCDFG
5,848,251	BCDFG

Primary Reference: 4,787,028 *Claim Elements: AE*

Secondary References	Claim Elements
Fibre channel storage …	ABCDFG
5,848,251	BCDFG

Primary Reference: 4,697,232 *Claim Elements: AE*

Secondary References	Claim Elements
Fibre channel storage …	ABCDFG
5,848,251	BCDFG

Primary Reference: 4,455,605 *Claim Elements: E*

Secondary References	Claim Elements
Fibre channel storage …	ABCDFG

Oracle-Huawei-NetApp Ex. 1024, pg. 2448

US005941972A

United States Patent [19]

Hoese et al. COPY FOR SCANNING

[11] Patent Number: 5,941,972

[45] Date of Patent: Aug. 24, 1999

[54] STORAGE ROUTER AND METHOD FOR PROVIDING VIRTUAL LOCAL STORAGE

[75] Inventors: Geoffrey B. Hoese, Austin; Jeffry T. Russell, Cibolo, both of Tex.

[73] Assignee: Crossroads Systems, Inc., Austin, Tex.

[21] Appl. No.: 09/001,799

[22] Filed: Dec. 31, 1997

[51] Int. Cl.[6] G06F 13/00

[52] U.S. Cl. 710/129; 710/128; 710/2

[58] Field of Search 710/1–2, 100–101, 710/126–131

[56] References Cited

U.S. PATENT DOCUMENTS

5,748,924	5/1998	Llorens et al.	395/309
5,768,623	6/1998	Judd et al.	395/857
5,809,328	9/1998	Nogales et al.	395/825
5,812,754	9/1998	Lui et al.	395/182.04
5,835,496	1/1998	Yeung et al.	370/514
5,848,251	12/1998	Lomelino et al.	395/309

Primary Examiner—Christopher B. Shin

Attorney, Agent, or Firm—Gray Cary Ware & Freidenrich, LLP

[57] ABSTRACT

A storage router (56) and storage network (50) provide virtual local storage on remote SCSI storage devices (60, 62, 64) to Fiber Channel devices. A plurality of Fiber Channel devices, such as workstations (58), are connected to a Fiber Channel transport medium (52), and a plurality of SCSI storage devices (60, 62, 64) are connected to a SCSI bus transport medium (54). The storage router (56) interfaces between the Fiber Channel transport medium (52) and the SCSI bus transport medium (54). The storage router (56) maps between the workstations (58) and the SCSI storage devices (60, 62, 64) and implements access controls for storage space on the SCSI storage devices (60, 62, 64). The storage router (56) then allows access from the workstations (58) to the SCSI storage devices (60, 62, 64) using native low level, block protocol in accordance with the mapping and the access controls.

14 Claims, 2 Drawing Sheets

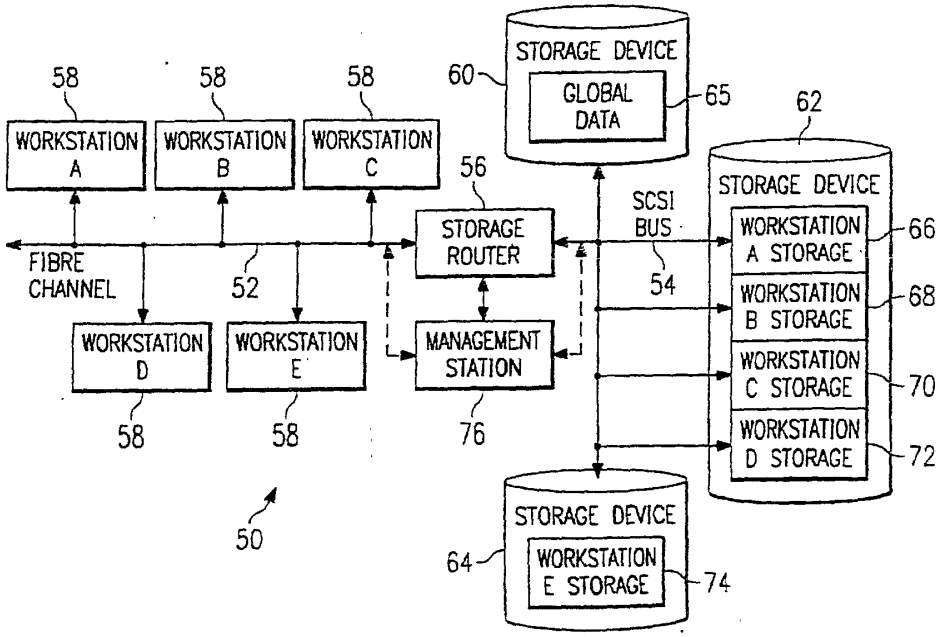

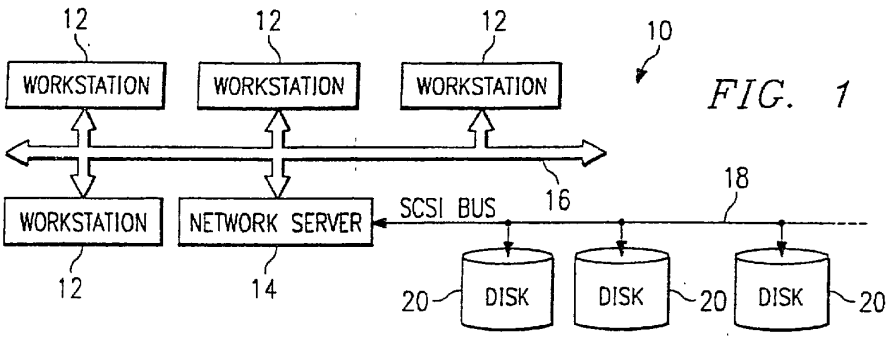

FIG. 1

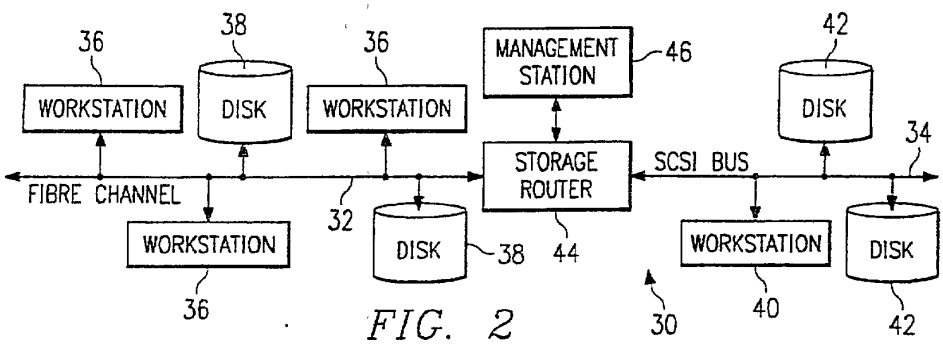

FIG. 2

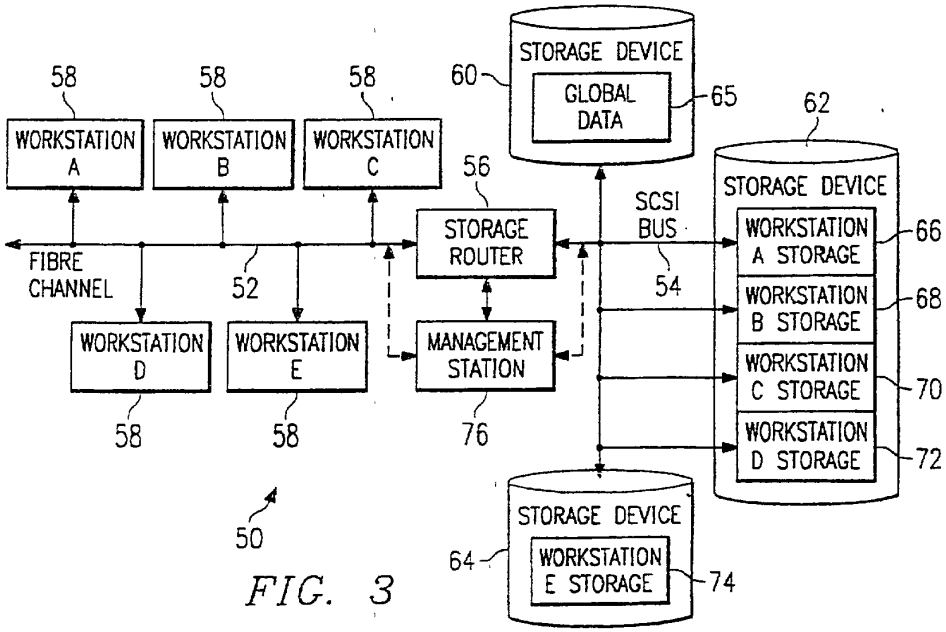

FIG. 3

Oracle-Huawei-NetApp Ex. 1024, pg. 2450

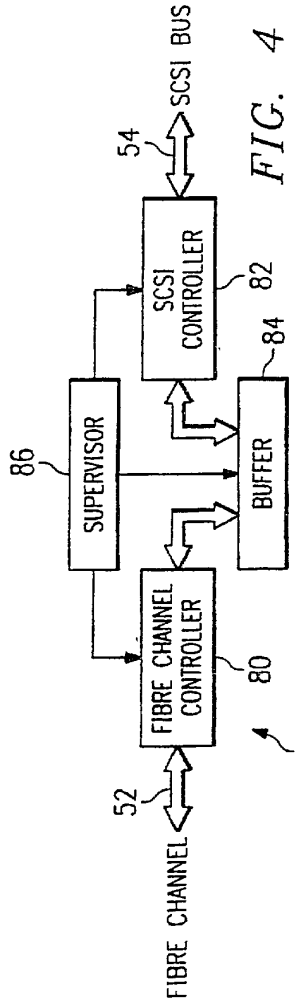

FIG. 4

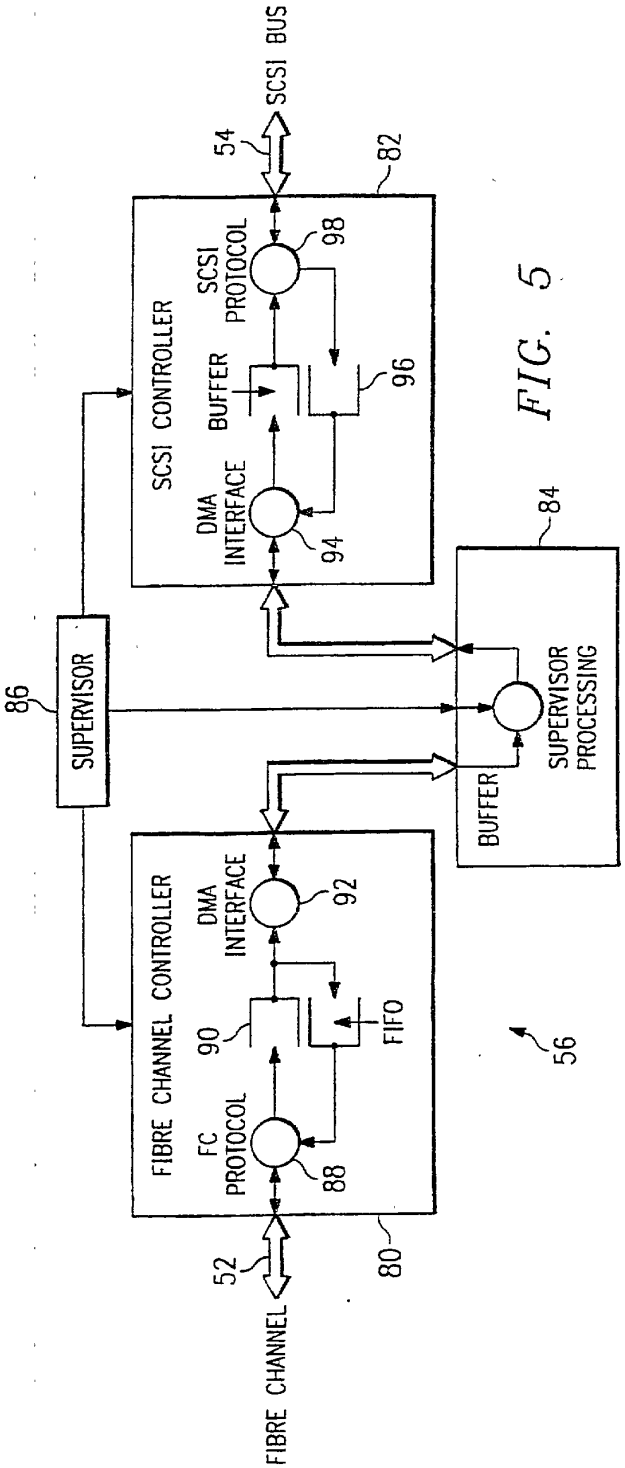

FIG. 5

Oracle-Huawei-NetApp Ex. 1024, pg. 2451

STORAGE ROUTER AND METHOD FOR PROVIDING VIRTUAL LOCAL STORAGE

TECHNICAL FIELD OF THE INVENTION

This invention relates in general to network storage devices, and more particularly to a storage router and method for providing virtual local storage on remote SCSI storage devices to Fibre Channel devices.

BACKGROUND OF THE INVENTION

Typical storage transport mediums provide for a relatively small number of devices to be attached over relatively short distances. One such transport medium is a Small Computer System Interface (SCSI) protocol, the structure and operation of which is generally well known as is described, for example, in the SCSI-1, SCSI-2 and SCSI-3 specifications. High speed serial interconnects provide enhanced capability to attach a large number of high speed devices to a common storage transport medium over large distances. One such serial interconnect is Fibre Channel, the structure and operation of which is described, for example, in *Fibre Channel Physical and Signaling Interface* (FC-PH), ANSI X3.230 *Fibre Channel Arbitrated Loop* (FC-AL), and ANSI X3.272 *Fibre Channel Private Loop Direct Attach* (FC-PLDA).

Conventional computing devices, such as computer workstations, generally access storage locally or through network interconnects. Local storage typically consists of a disk drive, tape drive, CD-ROM drive or other storage device contained within, or locally connected to the workstation. The workstation provides a file system structure, that includes security controls, with access to the local storage device through native low level, block protocols. These protocols map directly to the mechanisms used by the storage device and consist of data requests without security controls. Network interconnects typically provide access for a large number of computing devices to data storage on a remote network server. The remote network server provides file system structure, access control, and other miscellaneous capabilities that include the network interface. Access to data through the network server is through network protocols that the server must translate into low level requests to the storage device. A workstation with access to the server storage must translate its file system protocols into network protocols that are used to communicate with the server. Consequently, from the perspective of a workstation, or other computing device, seeking to access such server data, the access is much slower than access to data on a local storage device.

SUMMARY OF THE INVENTION

In accordance with the present invention, a storage router and method for providing virtual local storage on remote SCSI storage devices to Fibre Channel devices are disclosed that provide advantages over conventional network storage devices and methods.

According to one aspect of the present invention, a storage router and storage network provide virtual local storage on remote SCSI storage devices to Fibre Channel devices. A plurality of Fibre Channel devices, such as workstations, are connected to a Fibre Channel transport medium, and a plurality of SCSI storage devices are connected to a SCSI bus transport medium. The storage router interfaces between the Fibre Channel transport medium and the SCSI bus transport medium. The storage router maps between the workstations and the SCSI storage devices and implements access controls for storage space on the SCSI storage devices. The storage router then allows access from the workstations to the SCSI storage devices using native low level, block protocol in accordance with the mapping and the access controls.

According to another aspect of the present invention, virtual local storage on remote SCSI storage devices is provided to Fibre Channel devices. A Fibre Channel transport medium and a SCSI bus transport medium are interfaced with. A configuration is maintained for SCSI storage devices connected to the SCSI bus transport medium. The configuration maps between Fibre Channel devices and the SCSI storage devices and implements access controls for storage space on the SCSI storage devices. Access is then allowed from Fibre Channel initiator devices to SCSI storage devices using native low level, block protocol in accordance with the configuration.

A technical advantage of the present invention is the ability to centralize local storage for networked workstations without any cost of speed or overhead. Each workstation access its virtual local storage as if it work locally connected. Further, the centralized storage devices can be located in a significantly remote position even in excess of ten kilometers as defined by Fibre Channel standards.

Another technical advantage of the present invention is the ability to centrally control and administer storage space for connected users without limiting the speed with which the users can access local data. In addition, global access to data, backups, virus scanning and redundancy can be more easily accomplished by centrally located storage devices.

A further technical advantage of the present invention is providing support for SCSI storage devices as local storage for Fibre Channel hosts. In addition, the present invention helps to provide extended capabilities for Fibre Channel and for management of storage subsystems.

BRIEF DESCRIPTION OF THE DRAWINGS

A more complete understanding of the present invention and the advantages thereof may be acquired by referring to the following description taken in conjunction with the accompanying drawings, in which like reference numbers indicate like features, and wherein:

FIG. 1 is a block diagram of a conventional network that provides storage through a network server;

FIG. 2 is a block diagram of one embodiment of a storage network with a storage router that provides global access and routing;

FIG. 3 is a block diagram of one embodiment of a storage network with a storage router that provides virtual local storage;

FIG. 4 is a block diagram of one embodiment of the storage router of FIG. 3; and

FIG. 5 is a block diagram of one embodiment of data flow within the storage router of FIG. 4.

DETAILED DESCRIPTION OF THE INVENTION

FIG. 1 is a block diagram of a conventional network, indicated generally at **10**, that provides access to storage through a network server. As shown, network **10** includes a plurality of workstations **12** interconnected with a network server **14** via a network transport medium **16**. Each workstation **12** can generally comprise a processor, memory, input/output devices, storage devices and a network adapter as well as other common computer components. Network

Oracle-Huawei-NetApp Ex. 1024, pg. 2452

server 14 uses a SCSI bus 18 as a storage transport medium to interconnect with a plurality of storage devices 20 (tape drives, disk drives, etc.). In the embodiment of FIG. 1, network transport medium 16 is an network connection and storage devices 20 comprise hard disk drives, although there are numerous alternate transport mediums and storage devices.

In network 10, each workstation 12 has access to its local storage device as well as network access to data on storage devices 20. The access to a local storage device is typically through native low level, block protocols. On the other hand, access by a workstation 12 to storage devices 20 requires the participation of network server 14 which implements a file system and transfers data to workstations 12 only through high level file system protocols. Only network server 14 communicates with storage devices 20 via native low level, block protocols. Consequently, the network access by workstations 12 through network server 14 is slow with respect to their access to local storage. In network 10, it can Also be a logistical problem to centrally manage and administer local data distributed across an organization, including accomplishing tasks such as backups, virus scanning and redundancy.

FIG. 2 is a block diagram of one embodiment of a storage network, indicated generally at 30, with a storage router that provides global access and routing. This environment is significantly different from that of FIG. 1 in that there is no network server involved. In FIG. 2, a Fibre Channel high speed serial transport 32 interconnects a plurality of workstations 36 and storage devices 38. A SCSI bus storage transport medium interconnects workstations 40 and storage devices 42. A storage router 44 then serves to interconnect these mediums and provide devices on either medium global, transparent access to devices on the other medium. Storage router 44 routes requests from initiator devices on one medium to target devices on the other medium and routes data between the target and the initiator. Storage router 44 can allow initiators and targets to be on either side. In this manner, storage router 44 enhances the functionality of Fibre Channel 32 by providing access, for example, to legacy SCSI storage devices on SCSI bus 34. In the embodiment of FIG. 2, the operation of storage router 44 can be managed by a management station 46 connected to the storage router via a direct serial connection.

In storage network 30, any workstation 36 or workstation 40 can access any storage device 38 or storage device 42 through native low level, block protocols, and vice versa. This functionality is enabled by storage router 44 which routes requests and data as a generic transport between Fibre Channel 32 and SCSI bus 34. Storage router 44 uses tables to map devices from one medium to the other and distributes requests and data across Fibre Channel 32 and SCSI bus 34 without any security access controls. Although this extension of the high speed serial interconnect provided by Fibre Channel 32 is beneficial, it is desirable to provide security controls in addition to extended access to storage devices through a native low level, block protocol.

FIG. 3 is a block diagram of one embodiment of a storage network, indicated generally at 50, with a storage router that provides virtual local storage. Similar to that of FIG. 2, storage network 50 includes a Fibre Channel high speed serial interconnect 52 and a SCSI bus 54 bridged by a storage router 56. Storage router 56 of FIG. 3 provides for a large number of workstations 58 to be interconnected on a common storage transport and to access common storage devices 60, 62 and 64 through native low level, block protocols.

According to the present invention, storage router 56 has enhanced functionality to implement security controls and routing such that each workstation 58 can have access to a specific subset of the overall data stored in storage devices 60, 62 and 64. This specific subset of data has the appearance and characteristics of local storage and is referred to herein as virtual local storage. Storage router 56 allows the configuration and modification of the storage allocated to each attached workstation 58 through the use of mapping tables or other mapping techniques.

As shown in FIG. 3, for example, storage device 60 can be configured to provide global data 65 which can be accessed by all workstations 58. Storage device 62 can be configured to provide partitioned subsets 66, 68, 70 and 72, where each partition is allocated to one of the workstations 58 (workstations A, B, C and D). These subsets 66, 68, 70 and 72 can only be accessed by the associated workstation 58 and appear to the associated workstation 58 as local storage accessed using native low level, block protocols. Similarly, storage device 64 can be allocated as storage for the remaining workstation 58 (workstation E).

Storage router 56 combines access control with routing such that each workstation 58 has controlled access to only the specified partition of storage device 62 which forms virtual local storage for the workstation 58. This access control allows security control for the specified data partitions. Storage router 56 allows this allocation of storage devices 60, 62 and 64 to be managed by a management station 76. Management station 76 can connect directly to storage router 56 via a direct connection or, alternately, can interface with storage router 56 through either Fibre Channel 52 or SCSI bus 54. In the latter case, management station 76 can be a workstation or other computing device with special rights such that storage router 56 allows access to mapping tables and shows storage devices 60, 62 and 64 as they exist physically rather than as they have been allocated.

The environment of FIG. 3 extends the concept of a single workstation having locally connected storage devices to a storage network 50 in which workstations 58 are provided virtual local storage in a manner transparent to workstations 58. Storage router 56 provides centralized control of what each workstation 58 sees as its local drive, as well as what data it sees as global data accessible by other workstations 58. Consequently, the storage space considered by the workstation 58 to be its local storage is actually a partition (i.e., logical storage definition) of a physically remote storage device 60, 62 or 64 connected through storage router 56. This means that similar requests from workstations 58 for access to their local storage devices produce different accesses to the storage space on storage devices 60, 62 and 64. Further, no access from a workstation 58 is allowed to the virtual local storage of another workstation 58.

The collective storage provided by storage devices 60, 62 and 64 can have blocks allocated by programming means within storage router 56. To accomplish this function, storage router 56 can include routing tables and security controls that define storage allocation for each workstation 58. The advantages provided by implementing virtual local storage in centralized storage devices include the ability to do collective backups and other collective administrative functions more easily. This is accomplished without limiting the performance of workstations 58 because storage access involves native low level, block protocols and does not involve the overhead of high level protocols and file systems required by network servers.

FIG 4 is a block diagram of one embodiment of storage router 56 of FIG. 3. Storage router 56 can comprise a Fibre

Oracle-Huawei-NetApp Ex. 1024, pg. 2453

Channel controller **80** that interfaces with Fibre Channel **52** and a SCSI controller **82** that interfaces with SCSI bus **54**. A buffer **84** provides memory work space and is connected to both Fibre Channel controller **80** and to SCSI controller **82**. A supervisor unit **86** is connected to Fibre Channel controller **80**, SCSI controller **82** and buffer **84**. Supervisor unit **86** comprises a microprocessor for controlling operation of storage router **56** and to handle mapping and security access for requests between Fibre Channel **52** and SCSI bus **54**.

FIG. **5** is a block diagram of one embodiment of data flow within storage router **56** of FIG. **4**. As shown, data from Fibre Channel **52** is processed by a Fibre Channel (FC) protocol unit **88** and placed in a FIFO queue **90**. A direct memory access (DMA) interface **92** then takes data out of FIFO queue **90** and places it in buffer **84**. Supervisor unit **86** processes the data in buffer **84** as represented by supervisor processing **93**. This processing involves mapping between Fibre Channel **52** and SCSI bus **54** and applying access controls and routing functions. A DMA interface **94** then pulls data from buffer **84** and places it into a buffer **96**. A SCSI protocol unit **98** pulls data from buffer **96** and communicates the data on SCSI bus **54**. Data flow in the reverse direction, from SCSI bus **54** to Fibre Channel **52**, is accomplished in a reverse manner.

The storage router of the present invention is a bridge device that connects a Fibre Channel link directly to a SCSI bus and enables the exchange of SCSI command set information between application clients on SCSI bus devices and the Fibre Channel links. Further, the storage router applies access controls such that virtual local storage can be established in remote SCSI storage devices for workstations on the Fibre Channel link. In one embodiment, the storage router provides a connection for Fibre Channel links running the SCSI Fibre Channel Protocol (FCP) to legacy SCSI devices attached to a SCSI bus. The Fibre Channel topology is typically an Arbitrated Loop (FC_AL).

In part, the storage router enables a migration path to Fibre Channel based, serial SCSI networks by providing connectivity for legacy SCSI bus devices. The storage router can be attached to a Fibre Channel Arbitrated Loop and a SCSI bus to support a number of SCSI devices. Using configuration settings, the storage router can make the SCSI bus devices available on the Fibre Channel network as FCP logical units. Once the configuration is defined, operation of the storage router is transparent to application clients. In this manner, the storage router can form an integral part of the migration to new Fibre Channel based networks while providing a means to continue using legacy SCSI devices.

In one implementation (not shown), the storage router can be a rack mount or free standing device with an internal power supply. The storage router can have a Fibre Channel and SCSI port, and a standard, detachable power cord can be used, the FC connector can be a copper DB9 connector, and the SCSI connector can be a 68-pin type. Additional modular jacks can be provided for a serial port and a 802.3 10BaseT port, i.e. twisted pair Ethernet, for management access. The SCSI port of the storage router an support SCSI direct and sequential access target devices and can support SCSI initiators, as well. The Fibre Channel port can interface to SCSI-3 FCP enabled devices and initiators.

To accomplish its functionality, one implementation of the storage router uses: a Fibre Channel interface based on the HEWLETT-PACKARD TACHYON HPFC-5000 controller and a GLM media interface; an Intel 80960RP processor, incorporating independent data and program memory spaces, and associated logic required to implement a stand alone processing system; and a serial port for debug and system configuration. Further, this implementation includes a SCSI interface supporting Fast-20 based on the SYMBIOS 53C8xx series SCSI controllers, and an operating system based upon the WIND RIVERS SYSTEMS VXWORKS or IXWORKS kernel, as determined by design. In addition, the storage router includes software as required to control basic functions of the various elements, and to provide appropriate translations between the FC and SCSI protocols.

The storage router has various modes of operation that are possible between FC and SCSI target and initiator combinations. These modes are: FC Initiator to SCSI Target; SCSI Initiator to FC Target; SCSI Initiator to SCSI Target; and FC Initiator to FC Target. The first two modes can be supported concurrently in a single storage router device are discussed briefly below. The third mode can involve two storage router devices back to back and can serve primarily as a device to extend the physical distance beyond that possible via a direct SCSI connection. The last mode can be used to carry FC protocols encapsulated on other transmission technologies (e.g. ATM, SONET), or to act as a bridge between two FC loops (e.g. as a two port fabric).

The FC Initiator to SCSI Target mode provides for the basic configuration of a server using Fibre Channel to communicate with SCSI targets. This mode requires that a host system have an FC attached device and associated device drivers and software to generate SCSI-3 FCP requests. This system acts as an initiator using the storage router to communicate with SCSI target devices. The SCSI devices supported can include SCSI-2 compliant direct or sequential access (disk or tape) devices. The storage router serves to translate command and status information and transfer data between SCSI-3 FCP and SCSI-2, allowing the use of standard SCSI-2 devices in a Fibre Channel environment.

The SCSI Initiator to FC Target mode provides for the configuration of a server using SCSI-2 to communicate with Fibre Channel targets. This mode requires that a host system has a SCSI-2 interface and driver software to control SCSI-2 target devices. The storage router will connect to the SCSI-2 bus and respond as a target to multiple target IDs. Configuration information is required to identify the target IDs to which the bridge will respond on the SCSI-2 bus. The storage router then translates the SCSI-2 requests to SCSI-3 FCP requests, allowing the use of FC devices with a SCSI host system. This will also allow features such as a tape device acting as an initiator on the SCSI bus to provide full support for this type of SCSI device.

In general, user configuration of the storage router will be needed to support various functional modes of operation. Configuration can be modified, for example, through a serial port or through an Ethernet port via SNMP (simple network management protocol) or a Telnet session. Specifically, SNMP manageability can be provided via an 802.3 Ethernet interface. This can provide for configuration changes as well as providing statistics and error information. Configuration can also be performed via TELNET or RS-232 interfaces with menu driven command interfaces. Configuration information can be stored in a segment of flash memory and can be retained across resets and power off cycles. Password protection can also be provided.

In the first two modes of operation, addressing information is needed to map from FC addressing to SCSI addressing and vice versa. This can be 'hard' configuration data, due

Oracle-Huawei-NetApp Ex. 1024, pg. 2454

to the need for address information to be maintained across initialization and partial reconfigurations of the Fibre Channel address space. In an arbitrated loop configuration, user configured addresses will be needed for AL_PAs in order to insure that known addresses are provided between loop reconfigurations.

With respect to addressing, FCP and SCSI 2 systems employ different methods of addressing target devices. Additionally, the inclusion of a storage router means that a method of translating device IDs needs to be implemented. In addition, the storage router can respond to commands without passing the commands through to the opposite interface. This can be implemented to allow all generic FCP and SCSI commands to pass through the storage router to address attached devices, but allow for configuration and diagnostics to be performed directly on the storage router through the FC and SCSI interfaces.

Management commands are those intended to be processed by the storage router controller directly. This may include diagnostic, mode, and log commands as well as other vendor-specific commands. These commands can be received and processed by both the FCP and SCSI interfaces, but are not typically bridged to the opposite interface. These commands may also have side effects on the operation of the storage router, and cause other storage router operations to change or terminate.

A primary method of addressing management commands though the FCP and SCSI interfaces can be through peripheral device type addressing. For example, the storage router can respond to all operations addressed to logical unit (LUN) zero as a controller device. Commands that the storage router will support can include INQUIRY as well as vendor-specific management commands. These are to be generally consistent with SCC standard commands.

The SCSI bus is capable of establishing bus connections between targets. These targets may internally address logical units. Thus, the prioritized addressing scheme used by SCSI subsystems can be represented as follows: BUS:TARGET:LOGICAL UNIT. The BUS identification is intrinsic in the configuration, as a SCSI initiator is attached to only one bus. Target addressing is handled by bus arbitration from information provided to the arbitrating device. Target addresses are assigned to SCSI devices directly, though some means of configuration, such as a hardware jumper, switch setting, or device specific software configuration. As such, the SCSI protocol provides only logical unit addressing within the Identify message. Bus and target information is implied by the established connection.

Fibre Channel devices within a fabric are addressed by a unique port identifier. This identifier is assigned to a port during certain well-defined states of the FC protocol. Individual ports are allowed to arbitrate for a known, user defined address. If such an address is not provided, or if arbitration for a particular user address fails, the port is assigned a unique address by the FC protocol. This address is generally not guaranteed to be unique between instances. Various scenarios exist where the AL-PA of a device will change, either after power cycle or loop reconfiguration.

The FC protocol also provides a logical unit address field within command structures to provide addressing to devices internal to a port. The FCP_CMD payload specifies an eight byte LUN field. Subsequent identification of the exchange between devices is provided by the FQXID (Fully Qualified Exchange ID).

FC ports can be required to have specific addresses assigned. Although basic functionality is not dependent on this, changes in the loop configuration could result in disk targets changing identifiers with the potential risk of data corruption or loss. This configuration can be straightforward, and can consist of providing the device a loop-unique ID (AL_PA) in the range of "01h" to "EFh." Storage routers could be shipped with a default value with the assumption that most configurations will be using single storage routers and no other devices requesting the present ID. This would provide a minimum amount of initial configuration to the system administrator. Alternately, storage routers could be defaulted to assume any address so that configurations requiring multiple storage routers on a loop would not require that the administrator assign a unique ID to the additional storage routers.

Address translation is needed where commands are issued in the cases FC Initiator to SCSI Target and SCSI Initiator to FC Target. Target responses are qualified by the FQXID and will retain the translation acquired at the beginning of the exchange. This prevents configuration changes occurring during the course of execution of a command from causing data or state information to be inadvertently misdirected. Configuration can be required in cases of SCSI Initiator to FC Target, as discovery may not effectively allow for FCP targets to consistently be found. This is due to an FC arbitrated loop supporting addressing of a larger number of devices than a SCSI bus and the possibility of FC devices changing their AL-PA due to device insertion or other loop initialization.

In the direct method, the translation to BUS:TARGET:LUN of the SCSI address information will be direct. That is, the values represented in the FCP LUN field will directly map to the values in effect on the SCSI bus. This provides a clean translation and does not require SCSI bus discovery. It also allows devices to be dynamically added to the SCSI bus without modifying the address map. It may not allow for complete discovery by FCP initiator devices, as gaps between device addresses may halt the discovery process. Legacy SCSI device drivers typically halt discovery on a target device at the first unoccupied LUN, and proceed to the next target. This would lead to some devices not being discovered. However, this allows for hot plugged devices and other changes to the loop addressing.

In the ordered method, ordered translation requires that the storage router perform discovery on reset, and collapses the addresses on the SCSI bus to sequential FCP LUN values. Thus, the FCP LUN values 0–N can represent N+1 SCSI devices, regardless of SCSI address values, in the order in which they are isolated during the SCSI discovery process. This would allow the FCP initiator discovery process to identify all mapped SCSI devices without further configuration. This has the limitation that hot-plugged devices will not be identified until the next reset cycle. In this case, the address may also be altered as well.

In addition to addressing, according to the present invention, the storage router provides configuration and access controls that cause certain requests from FC Initiators to be directed to assigned virtual local storage partitioned on SCSI storage devices. For example, the same request for LUN 0 (local storage) by two different FC Initiators can be directed to two separate subsets of storage. The storage router can use tables to map, for each initiator, what storage access is available and what partition is being addressed by a particular request. In this manner, the storage space provided by SCSI storage devices can be allocated to FC initiators to provide virtual local storage as well as to create any other desired configuration for secured access.

Although the present invention has been described in detail, it should be understood that various changes,

Oracle-Huawei-NetApp Ex. 1024, pg. 2455

substitutions, and alterations can be made hereto without departing from the spirit and scope of the invention as defined by the appended claims.

What is claimed is:

1. A storage router for providing virtual local storage on remote SCSI storage devices to Fibre Channel devices, comprising:

a buffer providing memory work space for the storage router;

a Fibre Channel controller operable to connect to and interface with a Fibre Channel transport medium;

a SCSI controller operable to connect to and interface with a SCSI bus transport medium; and

a supervisor unit coupled to the Fibre Channel controller, the SCSI controller and the buffer, the supervisor unit operable:

to maintain a configuration for SCSI storage devices connected to the SCSI bus transport medium that maps between Fibre Channel devices and SCSI storage devices and that implements access controls for storage space on the SCSI storage devices; and

to process data in the buffer to interface between the Fibre Channel controller and the SCSI controller to allow access from Fibre Channel initiator devices to SCSI storage devices using native low level, block protocol in accordance with the configuration.

2. The storage router of claim 1, wherein the configuration maintained by the supervisor unit includes an allocation of subsets of storage space to associated Fibre Channel devices, wherein each subset is only accessible by the associated Fibre Channel device.

3. The storage router of claim 2, wherein the Fibre Channel devices comprise workstations.

4. The storage router of claim 2, wherein the SCSI storage devices comprise hard disk drives.

5. The storage router of claim 1, wherein the Fibre Channel controller comprises:

a Fibre Channel (FC) protocol unit operable to connect to the Fibre Channel transport medium;

a first-in-first-out queue coupled to the Fibre Channel protocol unit; and

a direct memory access (DMA) interface coupled to the first-in-first-out queue and to the buffer.

6. The storage router of claim 1, wherein the SCSI controller comprises:

a SCSI protocol unit operable to connect to the SCSI bus transport medium;

an internal buffer coupled to the SCSI protocol unit; and

a direct memory access (DMA) interface coupled to the internal buffer and to the buffer of the storage router.

7. A storage network, comprising:

a Fibre Channel transport medium;

a SCSI bus transport medium;

a plurality of workstations connected to the Fibre Channel transport medium;

a plurality of SCSI storage devices connected to the SCSI bus transport medium; and

a storage router interfacing between the Fibre Channel transport medium and the SCSI bus transport medium, the storage router providing virtual local storage on the SCSI storage devices to the workstations and operable:

to map between the workstations and the SCSI storage devices;

to implement access controls for storage space on the SCSI storage devices; and

to allow access from the workstations to the SCSI storage devices using native low level, block protocol in accordance with the mapping and access controls.

8. The storage network of claim 7, wherein the access controls include an allocation of subsets of storage space to associated workstations, wherein each subset is only accessible by the associated workstation.

9. The storage network of claim 7, wherein the SCSI storage devices comprise hard disk drives.

10. The storage network of claim 7, wherein the storage router comprises:

a buffer providing memory work space for the storage router;

a Fibre Channel controller operable to connect to and interface with a Fibre Channel transport medium, the Fibre Channel controller further operable to pull outgoing data from the buffer and to place incoming data into the buffer;

a SCSI controller operable to connect to and interface with a SCSI bus transport medium, the SCSI controller further operable to pull outgoing data from the buffer and to place incoming data into the buffer; and

a supervisor unit coupled to the Fibre Channel controller, the SCSI controller and the buffer, the supervisor unit operable:

to maintain a configuration for the SCSI storage devices that maps between Fibre Channel devices and SCSI storage devices and that implements the access controls for storage space on the SCSI storage devices; and

to process data in the buffer to interface between the Fibre Channel controller and the SCSI controller to allow access from workstations to SCSI storage devices in accordance with the configuration.

11. A method for providing virtual local storage on remote SCSI storage devices to Fibre Channel devices, comprising:

interfacing with a Fibre Channel transport medium;

interfacing with a SCSI bus transport medium;

maintaining a configuration for SCSI storage devices connected to the SCSI bus transport medium that maps between Fibre Channel devices and the SCSI storage devices and that implements access controls for storage space on the SCSI storage devices; and

allowing access from Fibre Channel initiator devices to SCSI storage devices using native low level, block protocol in accordance with the configuration.

12. The method of claim 11, wherein maintaining the configuration includes allocating subsets of storage space to associated Fibre Channel devices, wherein each subset is only accessible by the associated Fibre Channel device.

13. The method of claim 12, wherein the Fibre Channel devices comprise workstations.

14. The method of claim 12, wherein the SCSI storage devices comprise hard disk drives.

* * * * *

Oracle-Huawei-NetApp Ex. 1024, pg. 2456

FORM PTO—1520 (8-83)

REEXAMINATION

5,941,972

CONTROL NUMBER	CERTIFICATE DATE	CERTIFICATE NUMBER
66548 U.S.P.T.O. 90007123		

07/19/04

CLASS	SUBCLASS	O.I.P.E	ART UNIT	EXAMINER
710	315	SCANNED _____ Q.A. _____	2111	

TITLE OF INVENTION (FOR DESIGN APPLICATION ONLY):

☐ TERMINAL DISCLAIMER	☐ The term of this patent subsequent to _____ (date) has been disclaimed.	☐ The term of this patent shall not extend beyond the expiration date of Pat. No. _____.	☐ The terminal _____ months of this patent have been disclaimed.

ISSUING CLASSIFICATION

ORIGINAL		CROSS REFERENCE(S)	
CLASS	SUBCLASS	CLASS	SUBCLASS (ONE SUBCLASS PER BLOCK)
INTERNATIONAL CLASSIFICATION			

☐ Continued on Issue Slip Inside File Jacket

Form PTO-2009 (Rev. 4-97)

WARNING: The information disclosed herein may be restricted. Unauthorized disclosure may be prohibited by the United States Code Title 35, Sections 122, 181 and 368. Possession outside the U.S. Patent & Trademark Office is restricted to authorized employees and contractors only.

REQUESTER ☐ CORRESPONDENCE ADDRESS: PATENT OWNER ☐ THIRD PARTY ☒

Natu J. Patel, Esq.
Wang & Patel PC
1301 Dove Street Suite 1050
Newport Beach CA 92660

COPENDING OFFICE PROCEEDINGS		PREPARED FOR CERTIFICATE
TYPE OF PROCEEDING	NUMBER	
1.		(Docket Clerk)
2.		REEXAMINED AND PASSED FOR CERTIFICATE
3.		

FORM PTO—1520 (8-83)

REEXAMINATION

CONTROL NUMBER
66548 U.S. PTO
90007123

07/19/04

CLASS

7/

SEARCH NOTES

	Date	Ex'r

CLAIM NO.

FOR O.G. _____

DRAWING FIG.
FOR CERTIFICATE AND
FOR O.G. _____

LITIGATION REVIEW ☐ _____ _____
(exmr. init.) (date)

CASE NAME	DIRECTOR INITIALS

REEXAMINATION FIELD OF SEARCH

Class	Sub	Date	Ex'r

INDEX OF CLAIMS

Claim Final	Claim Original	Date	Claim Final	Claim Original	Date
	1			26	
	2			27	
	3			28	
	4			29	
	5			30	
	6			31	
	7			32	
	8			33	
	9			34	
	10			35	
	11			36	
	12			37	
	13			38	
	14			39	
	15			40	
	16			41	
	17			42	
	18			43	
	19			44	
	20			45	
	21			46	
	22			47	
	23			48	
	24			49	
	25			50	

SYMBOLS

	STATUS
✓	
=	Rejected
–	Patentable
A	(Through numeral) Canceled
O	Appeal

UNITED STATES PATENT AND TRADEMARK OFFICE

UNITED STATES DEPARTMENT OF COMMERCE
United States Patent and Trademark Office
Address COMMISSIONER FOR PATENTS
P O Box 1450
Alexandria, Virginia 22313-1450
www.uspto.gov

Bib Data Sheet

CONFIRMATION NO. 2293

SERIAL NUMBER	FILING OR 371(c) DATE	CLASS	GROUP ART UNIT	ATTORNEY DOCKET NO.
90/007,123	07/19/2004 RULE	710	2111	I006-8900

APPLICANTS

5941972, Residence Not Provided;
Crossroads Systems, Inc.(Owner), Austin, TX;
Natu J. Patel, Esq.(3rd Ptv. Req.), Newport Beach, CA;

** CONTINUING DATA **********

This application is a REX of 09/001,799 12/31/1997 PAT 5,941,972

** FOREIGN APPLICATIONS **********

Foreign Priority claimed	STATE OR COUNTRY	SHEETS DRAWING	TOTAL CLAIMS	INDEPENDENT CLAIMS
☐ yes ☐ no			14	2
35 USC 119 (a-d) conditions met ☐ yes ☐ no ☐ Met after Allowance				
Verified and Acknowledged Examiner's Signature Initials				

ADDRESS

Gray Cary Ware & Friedenrich LLP
1221 South MoPac Expressway Suite 400
Austin ,TX 78746-6875

TITLE

STORAGE ROUTER AND METHOD FOR PROVIDING VIRTUAL LOCAL STORAGE

FILING FEE RECEIVED		
2520	FEES: Authority has been given in Paper No. _____ to charge/credit DEPOSIT ACCOUNT No. _____ for following:	☐ All Fees ☐ 1.16 Fees (Filing) ☐ 1.17 Fees (Processing Ext. of time) ☐ 1.18 Fees (Issue) ☐ Other _____ ☐ Credit

REEXAMINATION

66548 U.S. PTO
90007123
07/19/04

PATENT APPLICATION

90007123

CONTENTS

Entered

1. REQUEST PAPERS FILED
2. Title Report
3. Notice of Reexam Req. Fil. Dt.
4. " " Assigned Grp.
5.
6.
7.
8.
9.
10.
11.
12.
13.
14.
15.
16.
17.
18.
19.
20.
21.
22.
23.
24.
25.
26.
27.
28.
29.
30.
31.
32.
33.