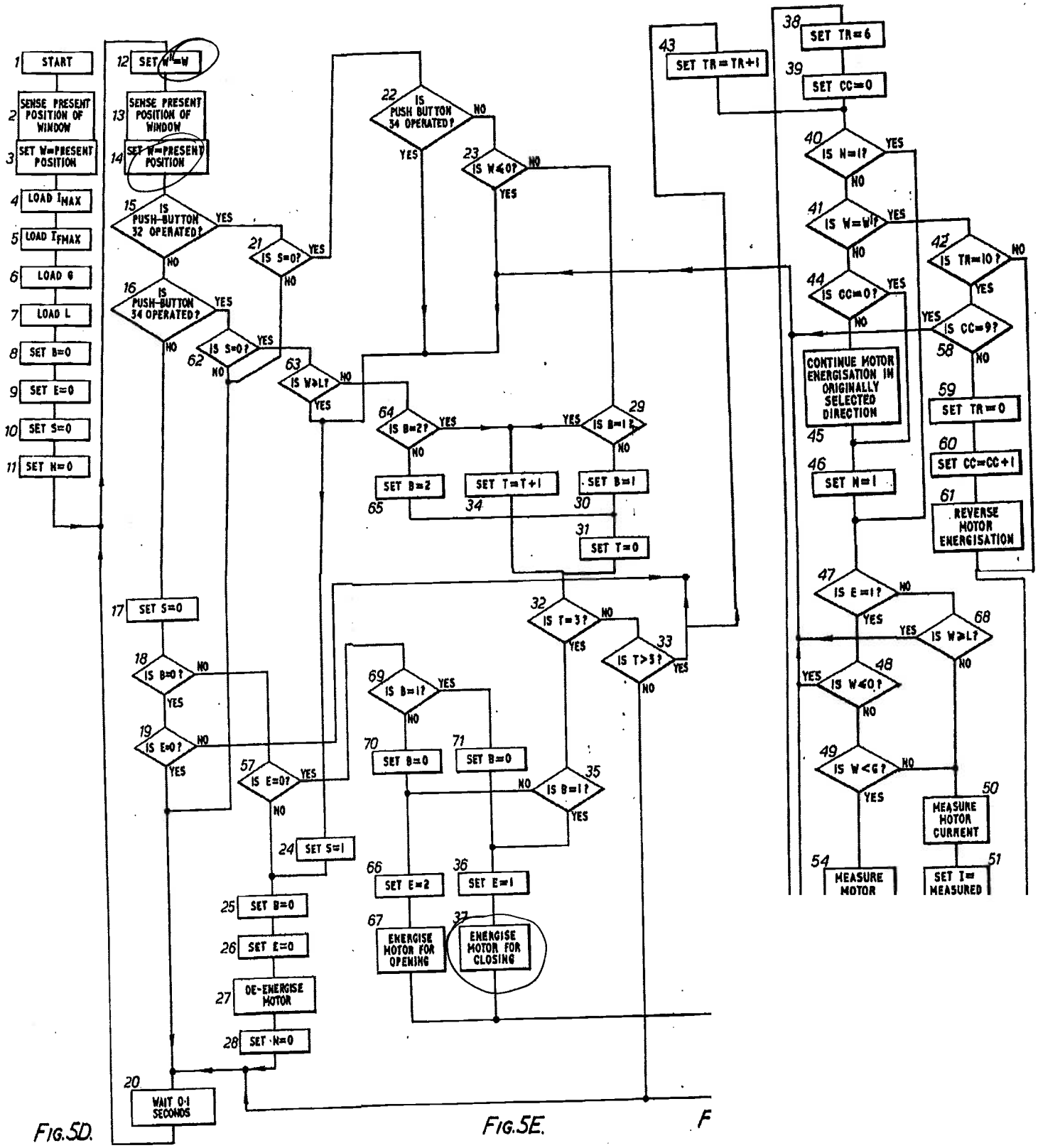

FIG.5D.

FIG.5E.

F

DOCKET ALARM
Find authenticated court documents without watermarks at docketalarm.com.

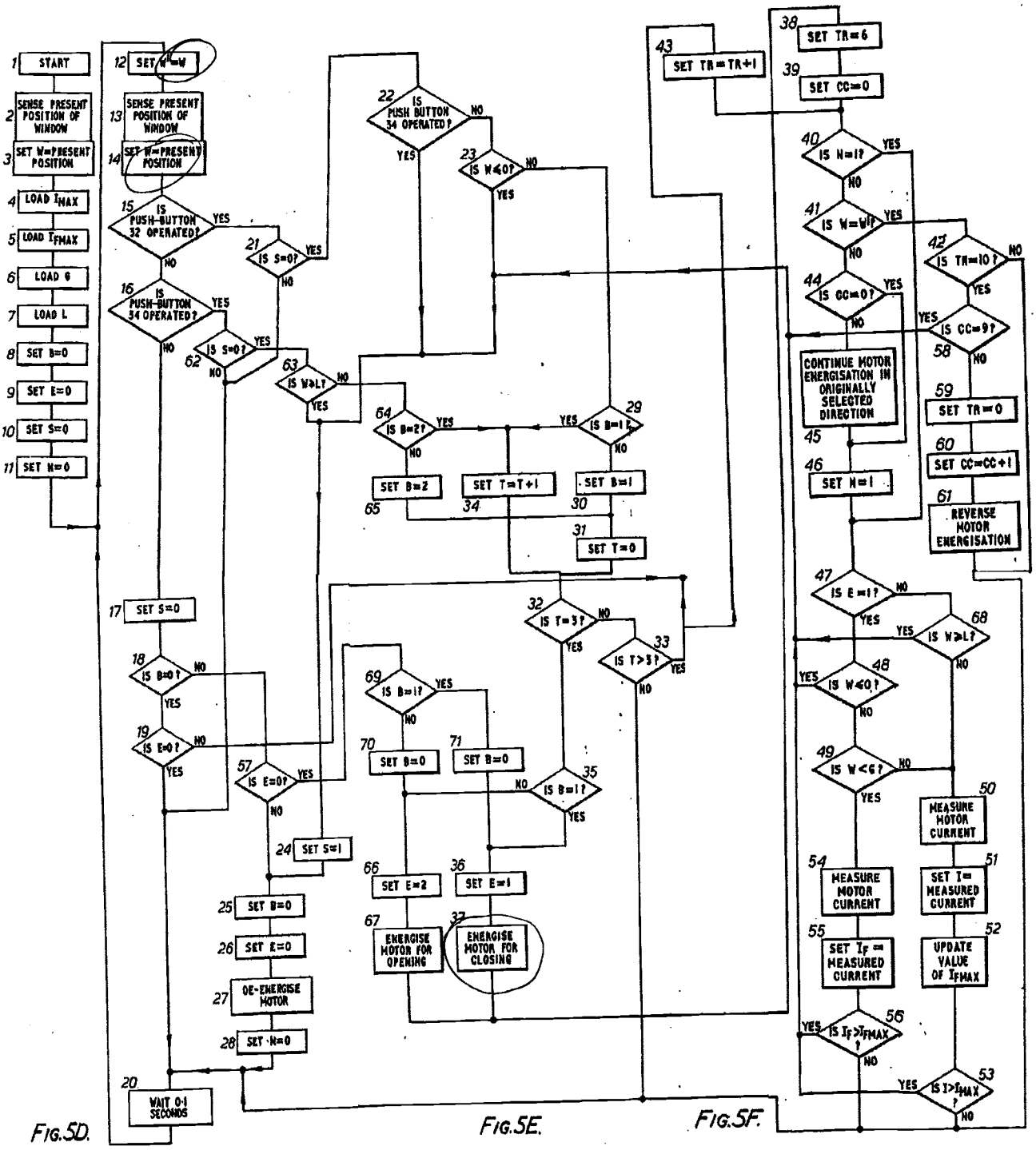

FIG.5D. FIG.5E. FIG.5F.

Δ π EXHIBIT 11
Deponent Borrelli
Date 12-16,14 Rpt'r GMS
WWW.DEPOBOOK.COM

DOCKET ALARM
Find authenticated court documents without watermarks at docketalarm.com.