Transactions of the Institute of Measurement and Control
http://tim.sagepub.com/

A microprocessor controlled gearbox for use in electric and hybrid-electric vehicles

P.W. Masding, J.R. Bumby and N. Herron

Transactions of the Institute of Measurement and Control 1988 10: 177
DOI: 10.1177/014233128801000402

A microprocessor controlled gearbox for use in electric and hybrid-electric vehicles

by P. W. Masding, BSc, J. R. Bumby, BSc, PhD, CEng, MIEE and N. Herron

This paper describes the automation and control of a 'manual' synchromesh gearbox in a form suitable for use in an electric or hybrid-electric vehicle. Such a computer controlled transmission system allows full integration and control of the drive train leading to improved vehicle performance. The automation process is described, and a full description given, of the computer control algorithms necessary to ensure smooth and reliable operation of the transmission system. It is shown that an up-change can be achieved in 1.4 seconds and a down-change in 1.2 seconds. These times are shown to represent maximum gear change times and details of how they can be reduced substantially are discussed.

Keywords: Microprocessor control, vehicle gearbox automation, computer control algorithms

1. Introduction

Automating the operation of a vehicle transmission allows the control of the engine and transmission system to be integrated, giving substantial benefits in terms of vehicle performance, energy efficiency and driveability. Although such a statement is applicable to internal combustion (ic) engine vehicles, electric vehicles and hybrid-electric vehicles, the details relating to how the engine/transmission should be controlled are quite different. The main thrust of this paper is to consider the automation and control of a discrete ratio, synchromesh transmission for use in an electric or a hybrid-electric vehicle. As a hybrid-electric vehicle includes both an electric traction motor and an ic engine in its drive system it is relevant to outline briefly the benefits to be gained by automating the transmission system in both an ic engine and an electric vehicle.

Fig 1 shows a typical efficiency map for a 50 kW ic engine. Also shown on this diagram is a line corresponding to the road load seen by the engine when operating in a fixed gear. It is only at high loads that the engine operates at all efficiently. At low loads the operating point is well removed from the high-efficiency (low-specific-fuel-consumption) area. At a road load of 10 kW, the engine operates at about 3000 rev/min and is relatively inefficient. By reducing engine speed relative to the vehicle speed, through a suitable change in gear ratio, the engine operating point can be moved up, along the constant power line, towards the high-efficiency region. As the operating point moves up this constant power line it would, ultimately, reach the optimum engine operating line, the locus of which links the maximum engine-efficiency points at each speed.

Such an optimum engine-operating schedule can be followed if a continuous variable transmission (CVT) is used (Stubbs, 1981; Stubbs and Ironside, 1981; Steig and Spencer Worley, 1982; Srinivasan *et al*, 1982; and Chan *et al*, 1984). Unfortunately, current CVT's have an efficiency which is lower than comparable discrete ratio units, and there is a danger that any efficiency benefits accruing from improved engine utilisation can be lost in the transmission itself. With this in mind Thring (1981) has suggested that a discrete ratio transmission with a number of ratios spanning a relatively large range may be a more efficient solution, even though the engine does not quite follow the optimum engine schedule. With this in mind, a number of workers have investigated the microprocessor control of automatic transmissions (Trummel and Burke, 1983; Richardson *et al*, 1983), while others seeking greater efficiency and lower costs have investigated the automation of spur gear transmissions (Busca *et al*, 1979; Main *et al*, 1987).

Whereas the ic engine vehicle meets a variety of operating requirements, the electric vehicle is generally designed for an urban or sub-urban operating environment where, for the advanced electric vehicle, traffic compatibility over a speed range of typically 0–100 km/h may be required. Such a requirement can be met by an electric-traction system with a single gear ratio of between 5:1 and 6:1, thereby simplifying the transmission system and reducing weight and cost. Generally, such vehicles employ power electronics to give continuous control of the motor torque over the full speed range of the motor.

A typical torque/speed characteristic for a DC separately excited traction motor is shown in Fig 2 and should be compared with the similar diagram, Fig 1, for the ic engine. The difference in the diagrams, and in particular the area of maximum efficiency, is immediately apparent. The area of maximum efficiency now tends to be at relatively high speed, low torque, in contrast to the low-speed high-torque requirement of the ic engine. This demands a different gear change logic if motor efficiency is to be maximised.

To operate the motor over its complete speed range, two distinct operating schemes are necessary. At about 2000 rev/min the torque is seen to fall with speed. This transition point is termed the 'break speed' and is the speed at which the motor will operate with full field current and full armature voltage. Below the break speed it is necessary to control the armature voltage at full field,

School of Engineering and Applied Science, University of Durham, South Road, Durham, England DH1 3LE.

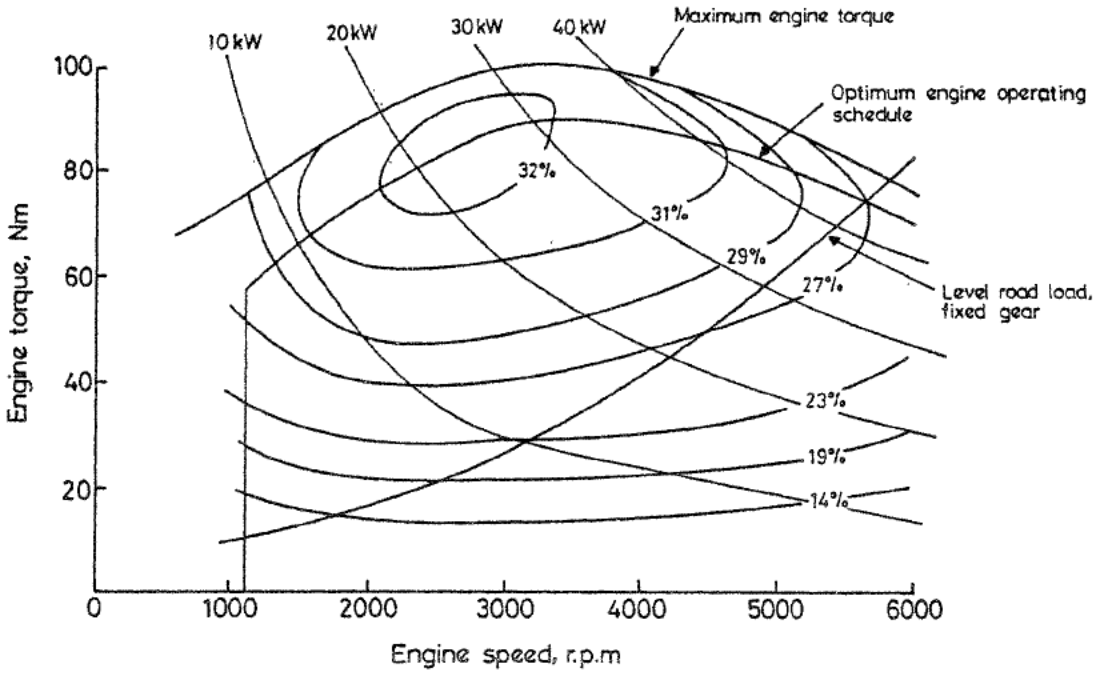

Fig 1 Road-load and engine-operating curves for an ic engine vehicle

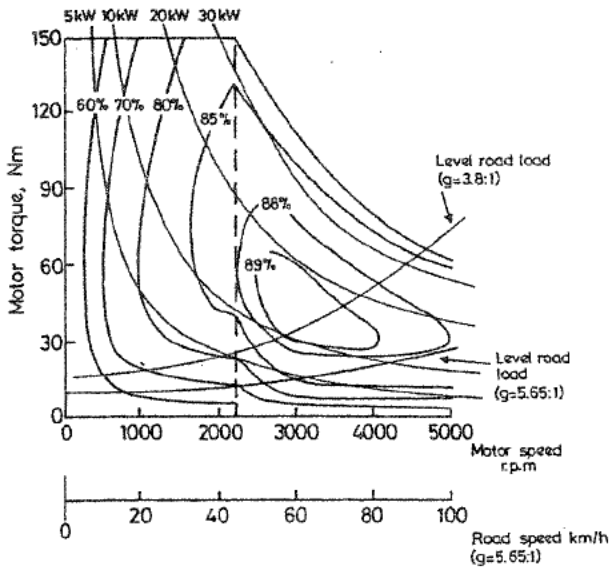

Fig 2 Road-load and motor-operating curves for all-electric vehicle

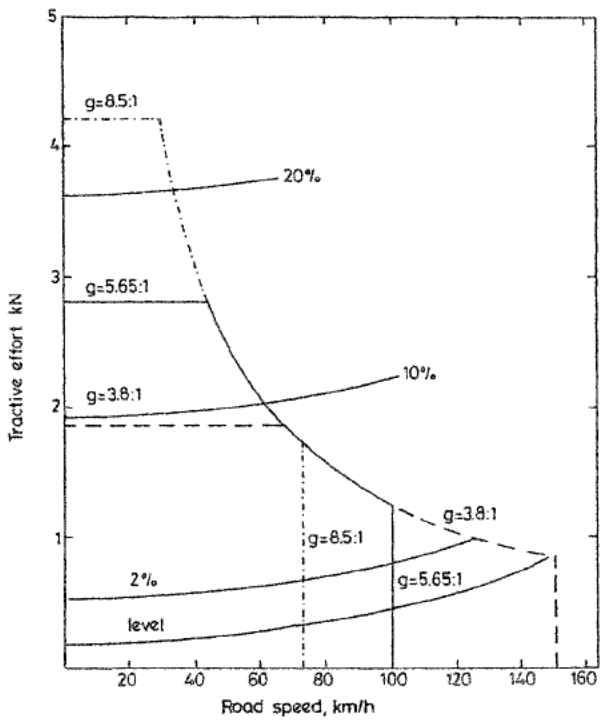

Fig 3 Tractive-effort and road-load curves for all-electric vehicle showing the effect of gear ratio

while speeds above the break speed are achieved by reducing the field current but at full armature voltage: so-called field weakening.

Fig 2 shows that the area of maximum efficiency tends to be at speeds just above the break speed in the field weakening region. To capitalise on this a number of electric vehicle designs have incorporated a transmission system with a number of discrete ratios (Bindin, 1986; Burba *et al*, 1986). The use of such a transmission allows the motor break speed to appear at a relatively low road-wheel speed, therefore extending the range of road speeds over which field weakening control can be used. By arranging a battery switching system which halves the applied armature voltage, this range can be extended further, down to below 10 km/h. Armature control electronics can now be dispensed with. Vehicle movement from rest is achieved by the use of starting resistors in the armature circuit.

Apart from a potentially improved drive system efficiency, the use of a stepped transmission can also improve the performance of the electric vehicle. This will become an even greater requirement in the future when electric vehicle range is extended by the use of high-energy-density battery systems, such as the sodium/

sulphur cell (Bindin, 1986). Fig 3 shows the motor maximum torque profile of Fig 2 converted to an equivalent traction force at the vehicle wheels for three different transmission ratios. Also shown is a typical road load requirement at different gradients. With a fixed ratio of 5.65:1, the vehicle can cover the speed range 0–100 km/h but is incapable of starting on gradients greater than 15% and travelling at speeds much above 100 km/h. A typical performance specification for an ic engine vehicle is a start from rest on a 20% gradient and the ability to sustain 120 km/h on a 2% gradient. Obviously, the electric vehicle with fixed gear ratio is a compromise and, for a more general-purpose vehicle, it has difficulty meeting either requirement. By adding two more gear ratios, both low- and high-speed performance is improved, while with an integrated motor/transmission control system, drive system efficiency can also be maximised.

As the hybrid ic engine/battery-electric vehicle can operate in an ic engine mode, an electric mode or with both power sources together providing the propulsion power, integrated control of the engine, traction motor and transmission is of prime importance (Trummel and Burke, 1983; Bumby and Forster, 1987; Forster and Bumby, 1988). With these benefits in mind, this paper examines the feasibility of automating and controlling a four-speed discrete-ratio transmission in a form suitable for use in an electric or hybrid-electric vehicle.

2. The hybrid ic engine/battery-electric test system

2.1 The test facility

The arrangement of the laboratory test system in which the automated transmission is installed is shown in Fig 4 and is used to examine the control and driveability problems relating to a parallel hybrid drive (Fig 5). In this drive arrangement a 32 kW ic engine, and a 37 kW separately excited DC traction motor, are connected mechanically in parallel at the input to the standard, four-speed, synchromesh transmission by a 1:1 toothed belt drive. Both the ic engine and the electric traction motor power electronics have been modified for computer control. In the case of the ic engine, the main butterfly valve is controlled by a stepper motor and is capable of moving this valve from a fully closed to fully open position in 425 ms. The control system for the DC motor incorporates both an armature and field chopper so that smooth control of the motor over its complete speed range, in both motoring and regenerative braking modes, is possible.

Incorporated between the ic engine and the belt drive is a one-way clutch, or freewheel, which allows the drive system to be operated in a pure electric mode with the ic engine remaining stationary. When necessary the engine can be started, run up to speed and synchronised with the rest of the drive train ready to pick up load. All drive train control is carried out by a Motorola M68000-based computer system. This computer system also gathers test data, stores it in memory, and, at the end of a test, passes this information to the test-bed control computer for analysis and graph plotting. Data are also passed during a test to generate on-line displays. A fuller description of the test facility and its computer control can be found in Bumby and Masding (1988).

2.2 Requirements of an automated transmission

In examining the feasibility of a computer controlled gearbox it is important to recognise that if good driveability is to be achieved without a 'hot shift', then gear change times must be as short as possible. In addition when a gear change is completed, drive torque should be reapplied quickly and smoothly.

With the drive arrangement described in section 2.1, the permanent connection of the electric motor to the

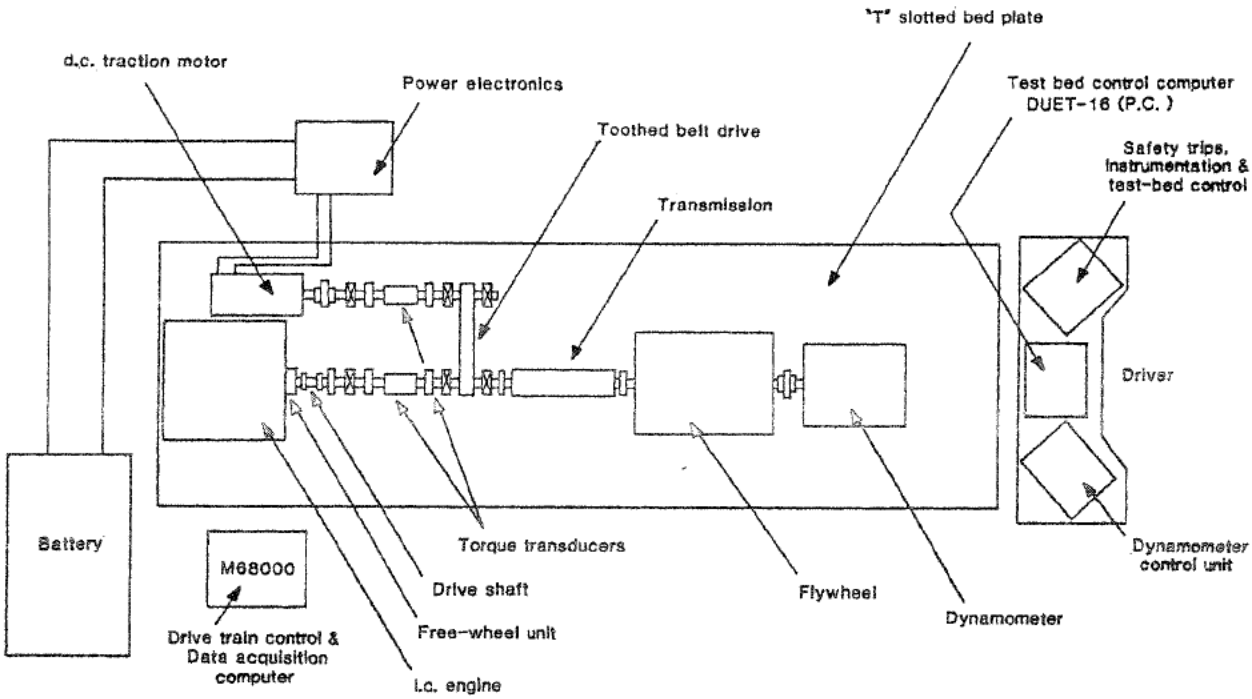

Fig 4 Test-bed layout

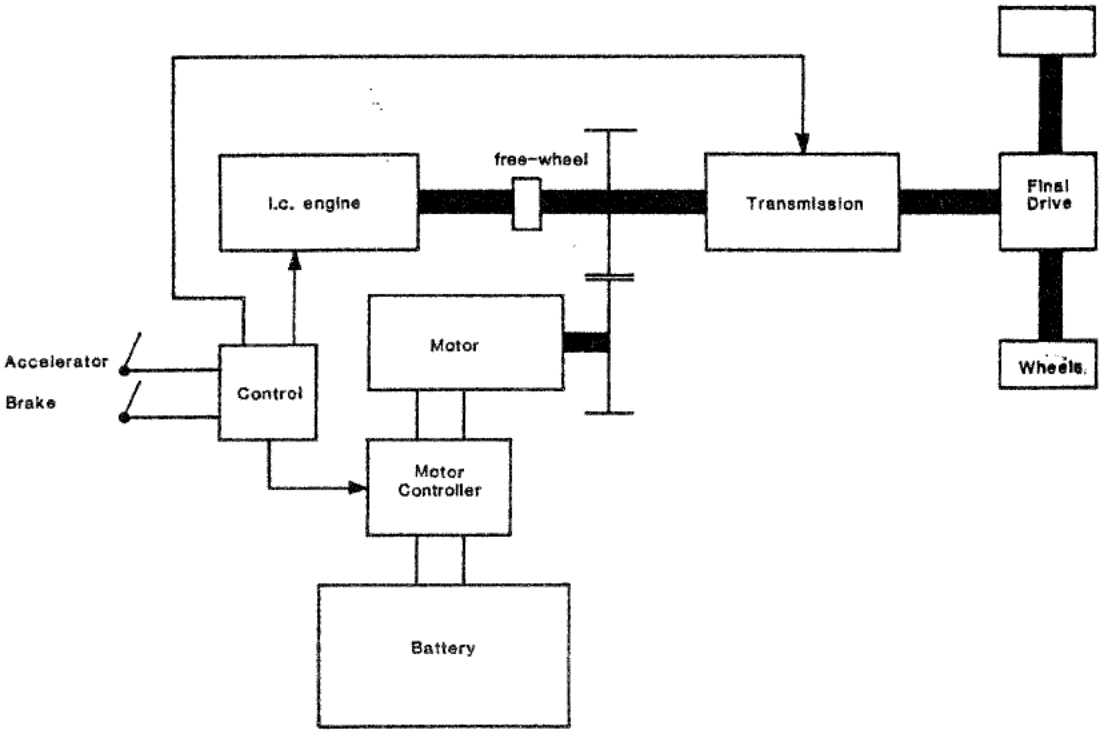

Fig 5 Parallel hybrid configuration

gearbox input shaft provides a means of precisely controlling the speed of this shaft. This allows a gear change to be completed without the need for a slipping clutch. In addition, the electric traction system is used to move the vehicle away from rest, with the ic engine being automatically started and synchronised with the moving drive train at speeds above 1000 rev/min, a control sequence again not requiring the use of a slipping clutch.

3. Transmission-system hardware

The function of the gear-change mechanism is to move the gear lever to any point on the H gate in a similar manner to a human operator. As the laboratory test system is used extensively to study control problems in hybrid electric drives it is advantageous to retain manual movement of the transmission lever. Such freedom of movement is provided by two pneumatic cylinders attached to the gear selector as shown in Fig 6. Activating the longitudinal cylinder causes a plate to move backwards and forwards, thus shifting the gear change lever between 1/3 and 2/4 ends of the H gate. This plate is mounted between two sets of bearings rotating in the horizontal plane. Each bearing wheel has a grooved edge which locates with a bevel on the edge of the plate. A second cylinder is mounted on the plate and moves with it. This cylinder provides the necessary sideways movement of the gear selector, between 1/2 and 3/4 sides of the H gate.

The circuit diagram for the pneumatic system is shown in Fig 7. Compressed air is supplied to the system from a reservoir which is recharged as necessary by an electric pump. During normal operation a regulator valve maintains the working pressure in the system at about 2 bar. Each of the two working cylinders is controlled by a piston valve. There are five ports on each piston valve,

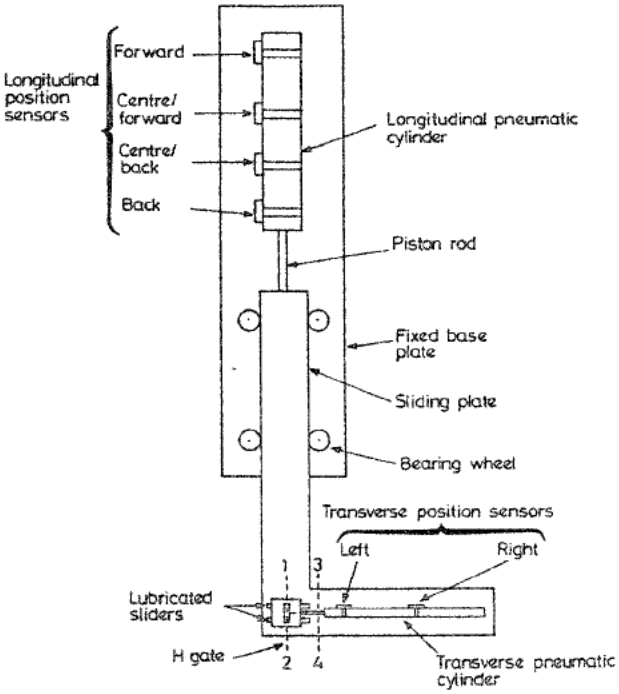

Fig 6 The gear-change mechanism

the flow path between them being controlled by activating the appropriate solenoid.

In the case of the longitudinal cylinder, two additional components are used to help stop the piston in the central, neutral, position. The first is a fast-acting valve which cuts the air supply to the cylinder 12 ms after its solenoid has been energised. Second, flow regulators are fitted to both supply lines feeding the cylinder. These allow air to flow freely into the cylinder but, when air is

DOCKET ALARM

Explore Litigation Insights

Docket Alarm provides insights to develop a more informed litigation strategy and the peace of mind of knowing you're on top of things.

Real-Time Litigation Alerts

Keep your litigation team up-to-date with **real-time alerts** and advanced team management tools built for the enterprise, all while greatly reducing PACER spend.

Our comprehensive service means we can handle Federal, State, and Administrative courts across the country.

Advanced Docket Research

With over 230 million records, Docket Alarm's cloud-native docket research platform finds what other services can't. Coverage includes Federal, State, plus PTAB, TTAB, ITC and NLRB decisions, all in one place.

Identify arguments that have been successful in the past with full text, pinpoint searching. Link to case law cited within any court document via Fastcase.

Analytics At Your Fingertips

Learn what happened the last time a particular judge, opposing counsel or company faced cases similar to yours.

Advanced out-of-the-box PTAB and TTAB analytics are always at your fingertips.

API

Docket Alarm offers a powerful API (application programming interface) to developers that want to integrate case filings into their apps.

LAW FIRMS

Build custom dashboards for your attorneys and clients with live data direct from the court.

Automate many repetitive legal tasks like conflict checks, document management, and marketing.

FINANCIAL INSTITUTIONS

Litigation and bankruptcy checks for companies and debtors.

E-DISCOVERY AND LEGAL VENDORS

Sync your system to PACER to automate legal marketing.