US 20040223614A1

(19) **United States**

(12) **Patent Application Publication** (10) **Pub. No.: US 2004/0223614 A1**

Seaman (43) **Pub. Date: Nov. 11, 2004**

(54) **SECURE VIDEO RECEIVER**

(76) Inventor: **Philip Jeffrey Seaman**, Los Gatos, CA (US)

Correspondence Address:
PHILIP JEFFREY SEAMAN
16130 JACARANDA WAY
LOS GATOS, CA 95037-3608 (US)

(21) Appl. No.: **10/434,768**

(22) Filed: **May 8, 2003**

Publication Classification

(51) **Int. Cl.**[7] **H04N 7/167**

(52) **U.S. Cl.** **380/239**

(57) **ABSTRACT**

A secure means to provide video on demand to a user's TV set **(1001)** while preventing unauthorized viewing or copying is disclosed. Subsequent embodiments leverage off of the core elements to provide wireless phone, videophone, internet, email and storage capabilities.

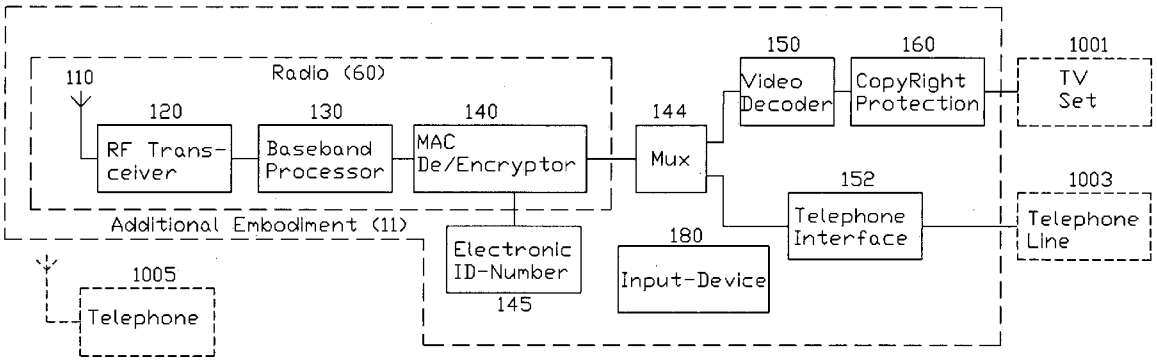

DOCKET ALARM

Find authenticated court documents without watermarks at docketalarm.com.

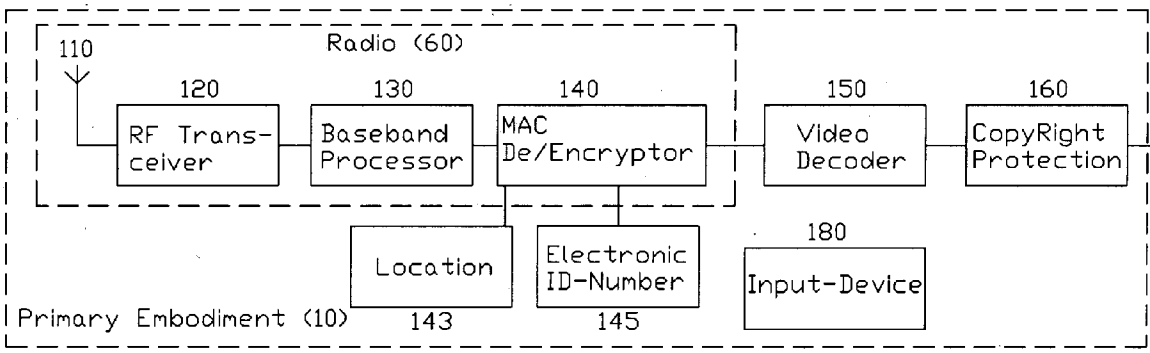

Fig 1

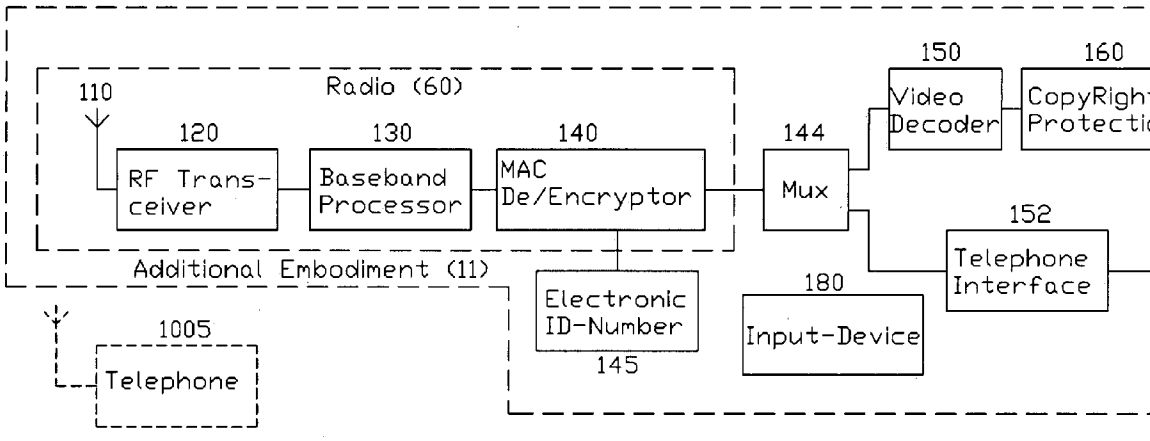

Fig 2

DOCKET ALARM
Find authenticated court documents without watermarks at docketalarm.com.

Secure video receiver, Philip Jeffrey Seaman

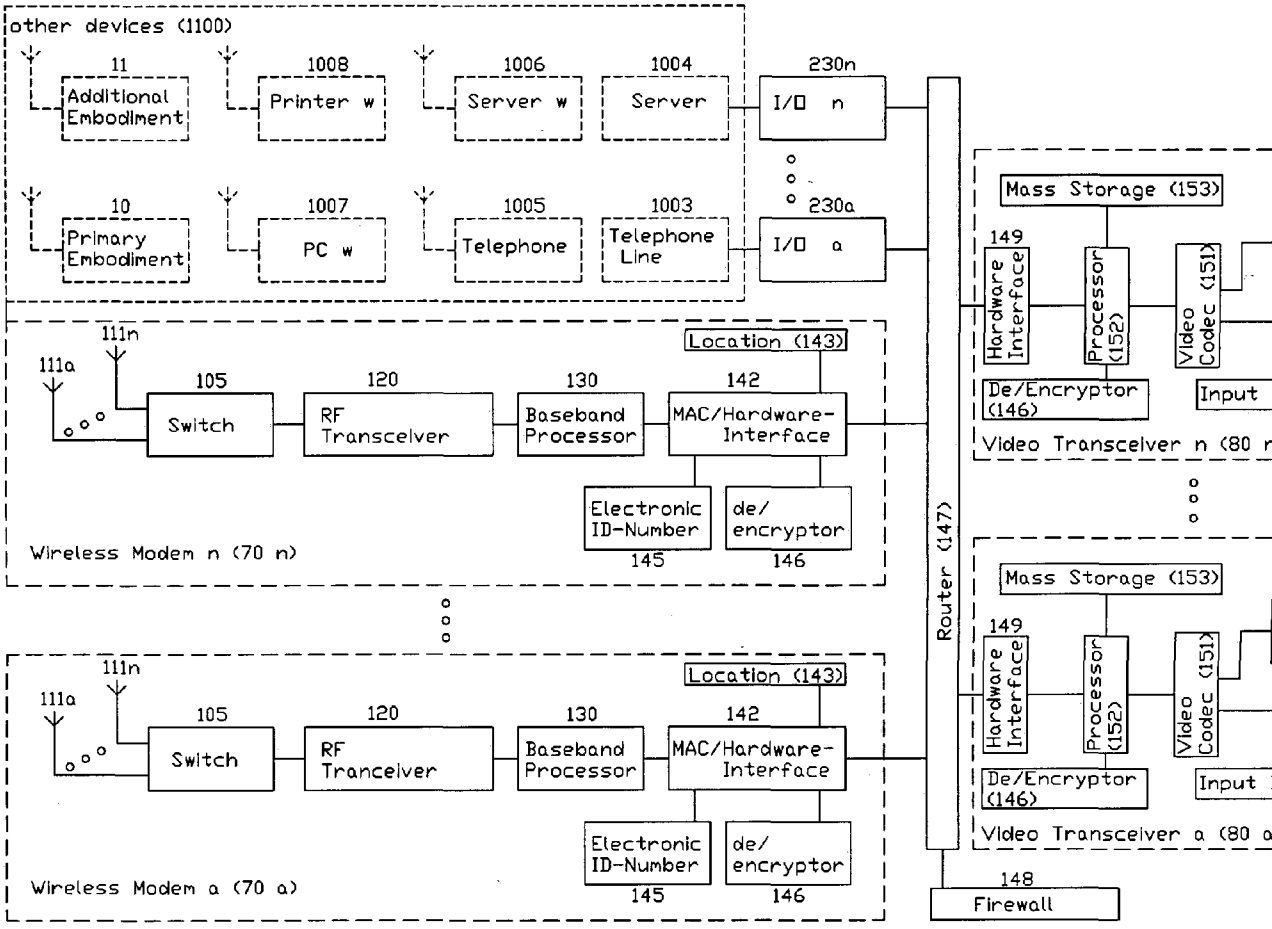

Fig 3

DOCKET ALARM
Find authenticated court documents without watermarks at docketalarm.com.

SECURE VIDEO RECEIVER

BACKGROUND OF INVENTION

[0001] Video on demand service is available; however, the cost is high and improvements are needed. To view video on demand, one needs a PC that is up to date as well as a high-speed internet connection. With this one can view video on demand from various internet websites.

[0002] This current video on demand solution has some problems. First the PC is not the optimal screen on which to watch a movie. PC screens are generally smaller, if not much smaller, than TV screens. Second, PCs are generally not located where people watch TV or Videos. TV sets are.

[0003] Third, even if a connection between a video on demand receiving PC and a TV set can be made, the displayed image is not optimal nor is the sound. If the image shows, it does not fill the screen. The sound is poor or garbled. Fourth, a PC is a very expensive. A PC is more expensive than a TV set and both are needed watch video on demand on a TV set. Fifth, a PC can copy video images and can run powerful enough software to overcome whatever protections the producers and distributors of those video images put into the video data stream. Producers of video content are concerned about delivering their product through a medium such as a PC that can so easily illegally copy and subsequently illegally re-distribute their product. Sixth the high speed digital line required is expensive.

[0004] So video on demand service is currently fraught with issues that need to be overcome.

[0005] The current, most highly used alternative to video on demand is rentals either most popularly via local stores or second most popularly via the mail. While low cost and displaying on a TV screen, these methods are inconvenient in the time required to execute the transaction. To wit, in the local store case, traveling to the store and back twice once to rent and once to return the video takes a number of minutes if not a significant fraction of an hour. Rentals by mail eliminate the customer need to do this; however, it takes at least a day to receive the rental.

[0006] The other means to deliver video, such as broadcast, cable or satellite, do not have the bandwidth to allow video on demand to a significant fraction of the served households. So at best they have resorted to pay-per-view allowing users to pay to watch first run videos that begin at set times during the day not at a random time at the users request.

[0007] Currently wired or wireless telephone service is not capable of providing video on demand. Neither is telephone service capability available via video rental services.

[0008] Currently high speed, two-way data access is most commonly available over either a telephone line via a DSL modem or over a coax cable TV line cable modem. Neither of these offers secure video to the users TV set without the use of a PC. They are also limited in the distance for the central office or head end particularly for DSL.

[0009] Video telephone is not a technology that is [illegible] ate over telephone lines that use a special display, camera and telephone, the picture is not very good. This solution does not provide video on demand. The best current solution requires PC, a camera and a high-speed line. This solution provides a better image. However, like the video on demand solution, the requirement of a PC is an expensive requirement that limits the usefulness.

SUMMARY OF INVENTION

[0010] It is the object of this invention to overcome the problems of the existing Video on Demand solutions.

[0011] First by having the device capable of delivering a video on demand feed to the input of a TV set the displayed image will be on a more optimal screen than that of a PC. This will also overcome the second problem of PC based video on demand by using the TV set that is where people typically watch videos.

[0012] By having suitable encryption on the video on demand signal so that it can only easily be de-encrypted by the receiving system as well placing copyright protections on the signal going to the TV set the image displayed with fill the whole TV screen and the sound will also be acceptable. By have a small dedicated device its cost will be less than that of a PC solving the fourth problem that of the high cost of a PC.

[0013] Further by having a small-dedicated device with no powerful generic processor or the device will keep the video secure solving the fifth problem. Producers of the video content will be assured that this means of distributing and displaying is no more subject to copying that any other distribution means.

[0014] By this means video can be more conveniently provided than by the most common alternate, video rental. There is no drive to the rental store and back to pick up the rental, no second trip to return the video, no wait for the postman to arrive with the rental from a mail order rental service. By using a wireless connection the high-speed link can cheaply, quickly and easily be set up. Hence the problems with video on demand can be overcome and it can be enjoyed by many more than currently are able to.

[0015] An additional embodiment is presented which also provides wireless phone capability in addition to video on demand of the first embodiment.

[0016] An alternate embodiment is presented that leverages off the high-speed data connection afforded by the first two embodiments. Significant capabilities are added, including one or more wireless modems and video transceivers including video telephony capability, as well as high-speed internet access point with a router, firewall, I/O ports, and a wireless network connectivity.

BRIEF DESCRIPTION OF DRAWINGS

[0017] **FIG. 1** Primary Embodiment Schematic

[0018] **FIG. 2** Additional Embodiment Schematic

DOCKET ALARM Find authenticated court documents without watermarks at docketalarm.com.

REFERENCE NUMERALS IN THE DRAWINGS

[0020]

10	Promary embodiment	11	Additional embodiment
60	Radio	70a	Wireless Modem a
70n	Wireless Modem n	80a	Video Transceiver a
80n	Video Transceiver n	105	Switch
110	Antenna	111a	Antenna a
111n	Antenna n	120	RF Transceiver
130	Baseband processor	140	MAC de/encryptor
142	MAC/Hardware interface	143	Location
144	Mux	145	Electronic Identification Number
146	De/Encryptor	147	router
148	Firewall	149	Hardware interface
150	Video decoder	151	Video codec
152	Processor	153	Mass storage
154	Telephone interface	160	Copyright protection
180	Input device	230a	I/O a
230n	I/O n	1001	TV Set
1002	Camera	1003	Telephone Line
1004	Server	1005	Telephone
1006	Server w	1007	PC w
1008	Printer	1100	Other devices

DETAILED DESCRIPTION

[0021] I. Introduction

[0022] Now referring to **FIG. 1**, there is a radio (**60**) comprising an antenna (**110**), RF transceiver (**120**), baseband processor (**130**), and Mac de/encryptor (**140**). The radio (**60**) changes a wireless encrypted video data stream into an unencrypted video data stream in the receive path while doing the reverse in the transmit direction.

[0023] A video decoder (**150**) decodes the unencrypted data stream into a standard video format that a TV set (**1001**) or monitor can display. Next copyright protection is added to the signal by the copyright protection (**160**) circuit. Now the copyright protected video is ready to be sent to the TV set (**1001**) or other display.

[0024] The device knows its location (**143**) and can provide it if requested. There is an electronic identification number (**145**) with which the device can be identified. There is a user input device (**180**) that allows the user to control the video content and otherwise provide inputs to the system. There is no data connection out of the device for the un-encrypted or un-copyright protected video. Thus a video on demand data stream can be received and displayed to a users TV set (**1001**) while preventing unauthorized copying or displaying.

[0025] Now referring to **FIG. 2** the additional embodiment schematic is shown. A telephone interface (**153**) and mux (**144**) have been added. By connecting to the user's telephone line (**1003**) the additional embodiment (11) can act as a base station for a wireless telephone (**1005**). The mux (**144**) appropriately directs data streams to and from the radio (**60**), the video decoder (**150**), and telephone interface (**152**).

[0026] Now referring to **FIG. 3**, the alternate embodiment schematic is shown. The alternate embodiment provides [illegible] tion capability, mass storage, two-way video, and high-speed data access point/router.

[0027] The improved wireless capability is comprised of one or more wireless modem (**70***a*, **70***n*). A wireless modem (**70***a*, **70***n*) is comprised of one more antenna (**111***a*,**111***n*), a switch (**105**), RF transceiver (**120**), baseband processor(**130**), and Mac/hardware interface (**142**), location (**143**), de/encryptor (**146**), and electronic identification number (**145**).

[0028] There is a switch (**105**) to connect the antennas (**111***a*, **111***n*) to the RF transceiver (**120**). Having more than one antenna (**111**) improves the modem's (**70**) performance and hence increases the distance and data rate.

[0029] The improved video capability is comprised of one or more video transceiver (**80***a*, **80***n*). There is a processor (**152**) that controls the elements of the video transceiver (**80**) including a hardware interface (**149**), video codec (**151**), de/encryptor (**146**), copyright protection (**160**), mass storage (**153**), electronic identification number (**145**), and input device (**180**).

[0030] In addition to the de/encryptor (**146**) in the wireless modem (**70**), there is also a de/encryptor (**146**) in the video transceiver (**80**). This allows encrypted video or data to be stored on the mass storage unit (**153**) and allows dual encryption. This improved video capability includes an electronic identification number (**145**) that allows unique identification of the video transceiver (**80**).

[0031] A video coder has been added to provide two-way video capability. The coder is combined with the decoder (**150**) of the primary embodiment to form a video coder-decoder or video codec (**151**). The video codec (**151**) can convert the signal from a camera into a coded video data stream.

[0032] This data stream can travel via the router (**147**) to the modem (**70**) which encrypts the data stream again to prevent unauthorized access and sends it out wirelessly.

[0033] Like the primary embodiment, there is an input device (**180**) that allows the user to input commands or responses. This can be used to dial another videophone user, play a video game, surf the internet or do other tasks. There is still no unencrypted video or standard video format connection in or out. Video received is as secure as in the primary embodiment. Video transmitted out is similarly secure.

[0034] The one or more wireless modems (**70**) and video transceivers (**80**) are connected to a router (**147**) that routes or switches the data between the modems (**70**), video transceivers (**80**) as well as to and from one or more I/O data ports (**230***a*, **230***n*). There is a firewall (**148**) connected to the router (**147**) to prevent unauthorized access to the system.

[0035] The alternate embodiment improves the high-speed wireless capability and telephone capability of the prior embodiments. It also takes advantage of this high-speed link to provide high-speed internet access point functionality in addition to video on demand, videophone and video gaming capability.

[0036] II. Operation

[0037] To set up the primary embodiment (10), place the [illegible]

DOCKET ALARM Find authenticated court documents without watermarks at docketalarm.com.

DOCKET ALARM

Explore Litigation Insights

Docket Alarm provides insights to develop a more informed litigation strategy and the peace of mind of knowing you're on top of things.

Real-Time Litigation Alerts

Keep your litigation team up-to-date with **real-time alerts** and advanced team management tools built for the enterprise, all while greatly reducing PACER spend.

Our comprehensive service means we can handle Federal, State, and Administrative courts across the country.

Advanced Docket Research

With over 230 million records, Docket Alarm's cloud-native docket research platform finds what other services can't. Coverage includes Federal, State, plus PTAB, TTAB, ITC and NLRB decisions, all in one place.

Identify arguments that have been successful in the past with full text, pinpoint searching. Link to case law cited within any court document via Fastcase.

Analytics At Your Fingertips

Learn what happened the last time a particular judge, opposing counsel or company faced cases similar to yours.

Advanced out-of-the-box PTAB and TTAB analytics are always at your fingertips.

API

Docket Alarm offers a powerful API (application programming interface) to developers that want to integrate case filings into their apps.

LAW FIRMS
Build custom dashboards for your attorneys and clients with live data direct from the court.

Automate many repetitive legal tasks like conflict checks, document management, and marketing.

FINANCIAL INSTITUTIONS
Litigation and bankruptcy checks for companies and debtors.

E-DISCOVERY AND LEGAL VENDORS
Sync your system to PACER to automate legal marketing.