United States Patent [19]

Lacey

[11] **Patent Number: 4,502,483**

[45] **Date of Patent: Mar. 5, 1985**

[54] **METHOD AND APPARATUS FOR SHAPING A DISTAL FEMORAL SURFACE**

[75] Inventor: **James A. Lacey**, Winter Park, Fla.

[73] Assignee: **Dow Corning Corporation**, Midland, Mich.

[21] Appl. No.: **473,466**

[22] Filed: **Mar. 9, 1983**

[51] **Int. Cl.**[3] **A61F 5/04**

[52] **U.S. Cl.** ..... **128/303 R**; 128/92 E; 128/92 H

[58] **Field of Search** ..... 128/92 R, 92 E, 92 EA, 128/92 EB, 92 H, 305, 317, 303; 3/1.9, 1.91, 1.911

[56] **References Cited**

U.S. PATENT DOCUMENTS

4,211,228	7/1980	Cloutier	3/1.911
4,349,018	9/1982	Chambers	128/92 E
4,457,307	7/1984	Stillwell	128/317

OTHER PUBLICATIONS

Zimmer, "Cloutier TM Total Knee" 1979, B274 5M679.
Howmedica, "The Howmedica Kinematic Knee System", 1981, ST3210-1 2/81 15MB.
Howmedica, "Total Condylar Knee Prosthesis Surg. Tech." C. S. Ranawat, 1978, ST2010 2/79 10MB.
Zimmer, "Eptekhar TM II Knee Prosthesis", 1981, B-281 5M281.
Zimmer, "Geo-Patella TM /Geo-Tibial TM Total Knee" 1977, B-260-1 10M778.
Richards, "R.C.M. TM Total Knee System" 1978, 3246, Rev 9-79.
Zimmer, "The Multi-Radius TM Total Knee with Surgeon-Guided Instrumentation" 1978 B271 7500 M 680.
Howmedica Surg. Tech., "Total Condylar Prosthesis Surg. Tech." J. N. Insall et al., 1976 ST 2002 12/76 10M.
The Howmedica ® Universal TM Total Knee Instrumentation System, Brochure No. H-2026-1 1/82 15M B (1980); Howmedica, Inc., Rutherford, NJ 07070, especially see pp. 19-24 and FIG. 14.
"New Jersey Tricompartmental Total Knee Replacement Surgical Procedure by Frederick F. Buechel, M.D.", 13 pages, issue date 1/1981, Form No. 1280-32, DePuy division, Boehringer Mannheim Corp., Warsaw, Ind., 46580.
Dow Corning Wright Knee Instrumentation System, Data Sheet No. L095-0015, dated Jan. 1982; Dow Corning Wright, Arlington, TN 38002, 6 pages.
Dow Corning Wright Lacey Condylar Total Knee System, Data Sheet No. L095-0104, ©Dow Corning Wright 1983, Arlington, TN 38002, 8 pages.

Primary Examiner—C. Fred Rosenbaum
Assistant Examiner—C. W. Shedd
Attorney, Agent, or Firm—Richard E. Rakoczy

[57] **ABSTRACT**

The present invention provides a method and apparatus for preparing the distal surface of a femur to receive a distal femoral prosthesis employing an alignment guide which is used to externally locate the central long axis of the femur based upon certain external reference points on the distal femur. The alignment guide is composed of a main body, a pivotable resection guide instrument holder, a locator pin, at least one femoral surface modifying instrument which cooperatively engages with the holder and a means such as a clamp for affixing the main body to the femur to accomplish the shaping of the distal femoral surface. The central long axis of the main body is brought into alignment with the central long axis of the femur through the use of a locator pin. The pivotable instrument holder holds resection guide instruments at a preselected angle with respect to the main body such that the shaping instruments fixed thereto assume the proper alignment with respect to the central long axis of the femur such that the distal femoral surface is shaped relative to that axis in a simple and accurate manner.

6 Claims, 17 Drawing Figures

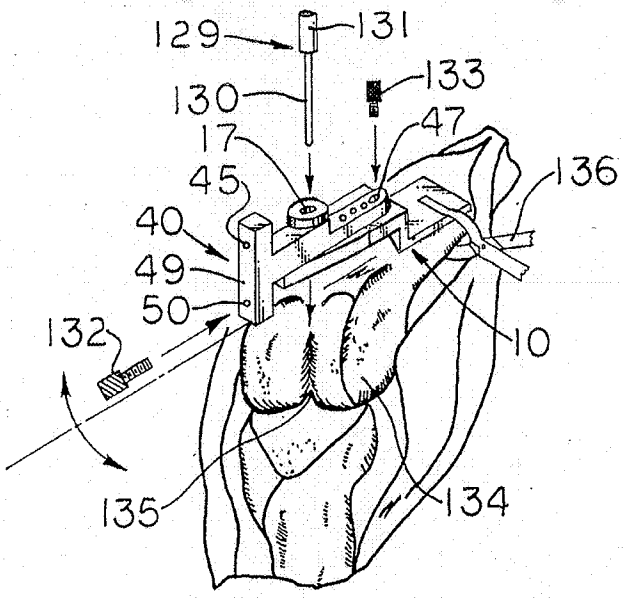

Fig. 1

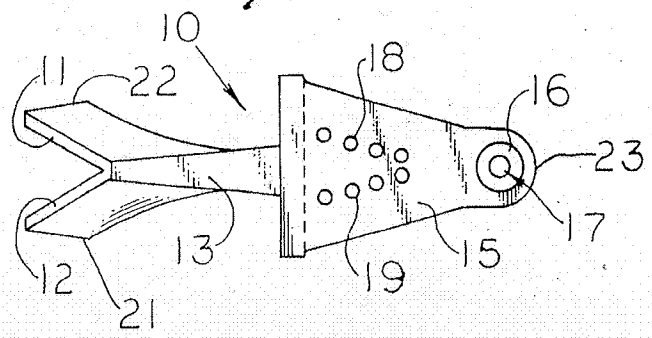

Fig. 3

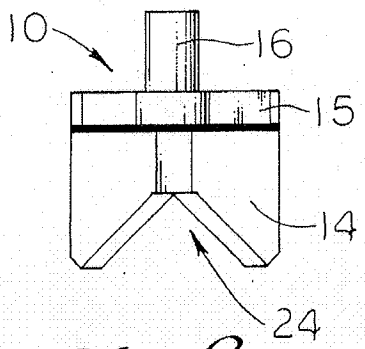

Fig. 2

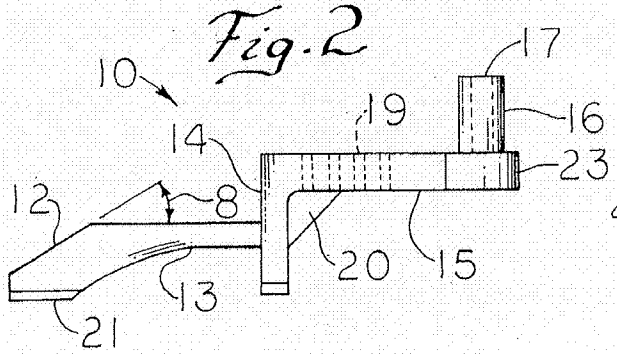

Fig. 6

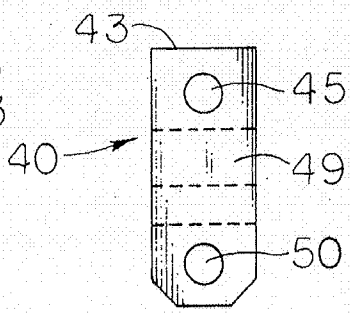

Fig. 4

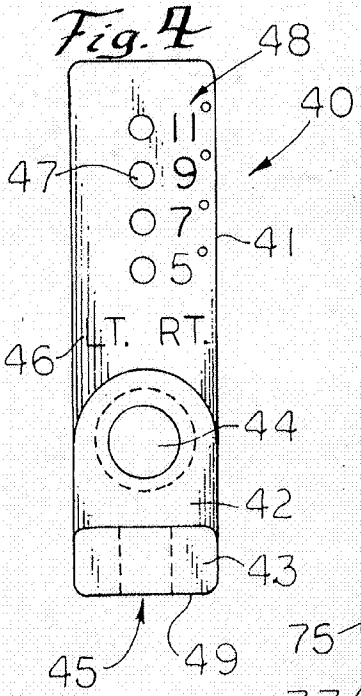

Fig. 5

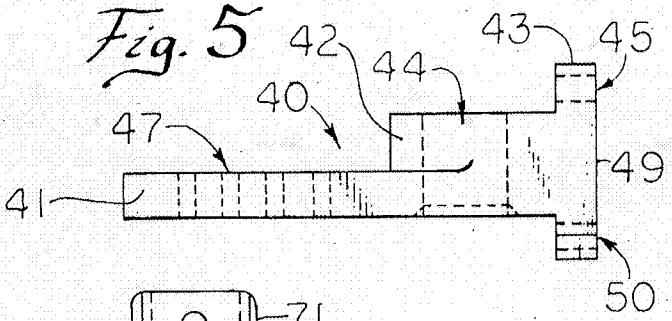

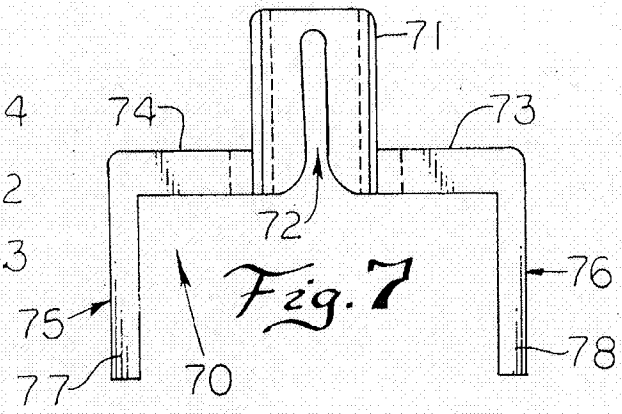

Fig. 7

Fig. 8

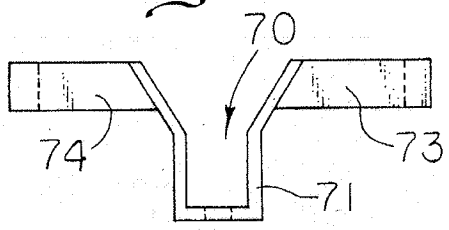

Fig. 10

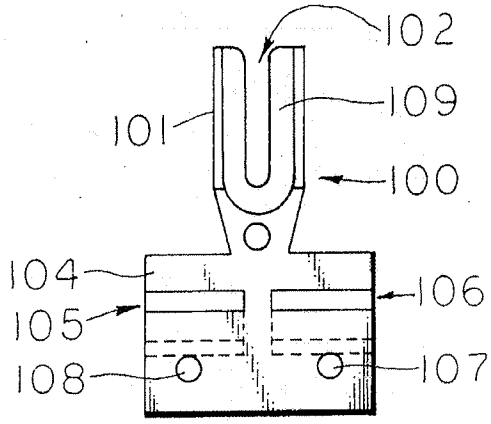

Fig. 9

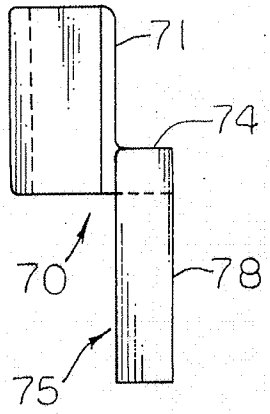

Fig. 11

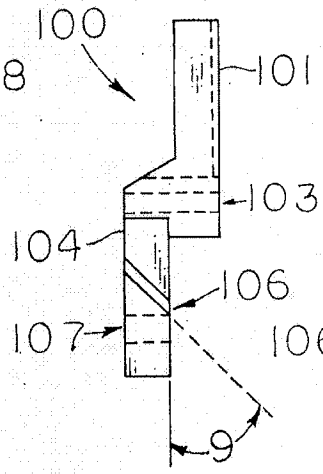

Fig. 12

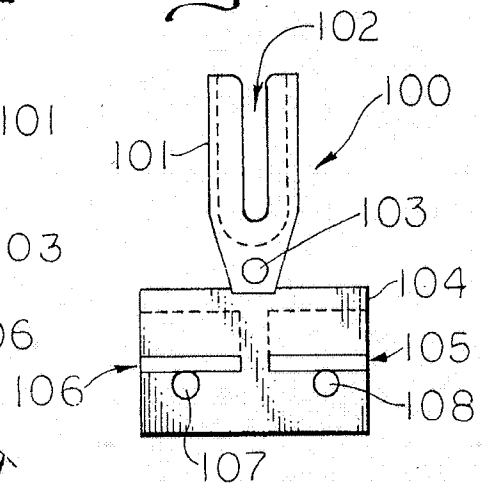

Fig. 16

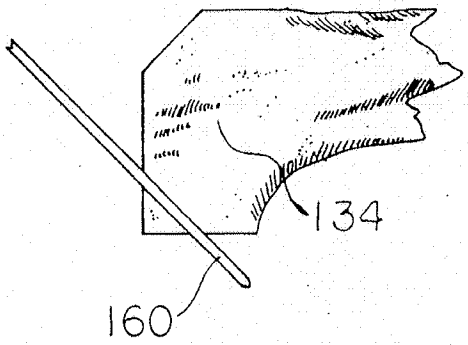

Fig. 17

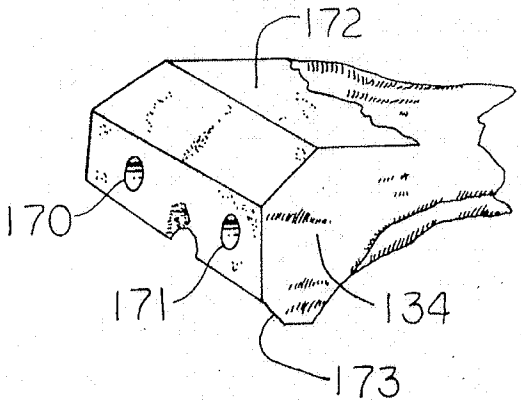

Fig. 13

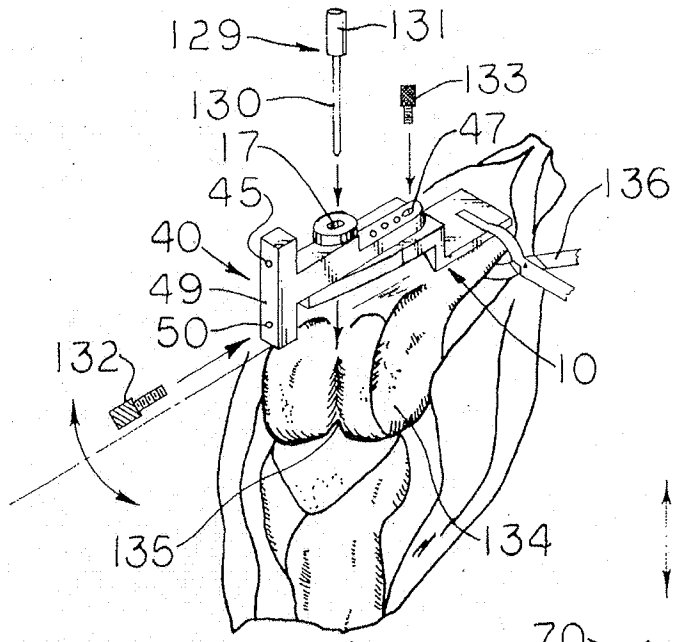

Fig. 14

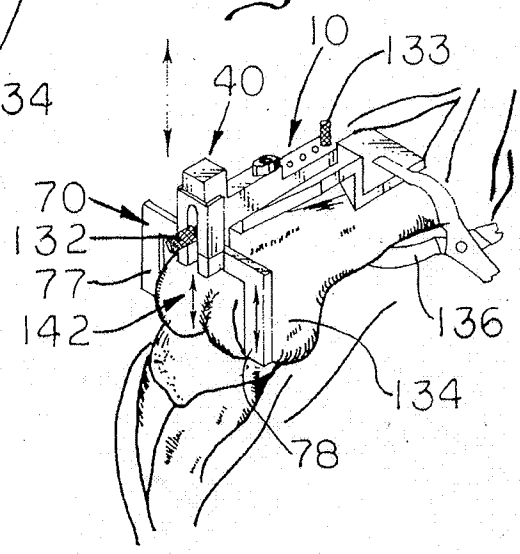

Fig. 15

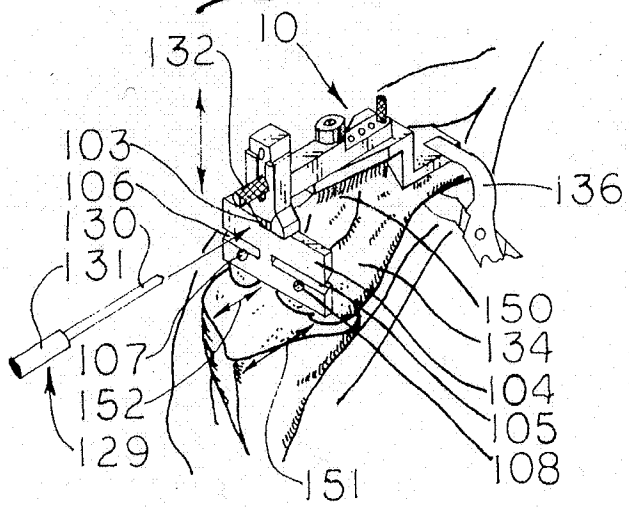

METHOD AND APPARATUS FOR SHAPING A DISTAL FEMORAL SURFACE

BACKGROUND OF THE INVENTION

This invention relates to a method of shaping the distal surface of a human femur using certain alignment guides to guide the shaping of that surface to receive a distal femoral prosthesis and to certain apparatus used in the method.

Various types of alignment guides and methods have been developed to enable a surgeon to affix a distal femoral knee prosthesis to the human femur. Since the purpose for affixing such a prosthesis is to restore the patient's ability to walk after disease or other traumatic causes have impaired that ability, it is important that the prosthesis be attached to the femur in such a manner that it will approximate as closely as possible the natural condyles which the prosthesis is replacing. If the prosthesis is not properly affixed with respect to the femur, an unnatural gait or other complications can result.

It is common practice to use the long central axis of the femur as a guide in determining the manner in which the distal femoral surface should be shaped to receive a properly aligned distal femoral prosthesis. Generally, a pre-operative single, long anterior-posterior radiograph showing the shaft of the tibia and femur is made and the angle of the long central axis of the femur relative to the vertical axis of the body (physiological valgus, generally from 5°–12°) is visualized. That angle is then used as a reference when the distal femoral surface is shaped using various cutting instruments and guides. In one such method, a long axial alignment jig (rod) is employed which is positioned over the outside surface of the patient's leg in a position which the surgeon visually determines to correspond to the central long axis of the femur and the femur is shaped relative to the alignment of that rod. One example of the manner in which the distal femoral surface is shaped to receive a prosthesis using an external alignment rod is shown in "The HOWMEDICA Universal Total Knee Instrument System", brochure no. H-2026-1 1/82 15M B (1980) from HOWMEDICA, Inc., Orthopaedics Division, Rutherford, NJ 07070 which is hereby incorporated by reference.

The external alignment rod has a disadvantage in that the surgeon is relying upon visual and tactile means for positioning the alignment rod and thereby the femoral surface resection guide since the patient's skin covers the major portion of the femur and screens it from view.

One part of the method described in the aforementioned Howmedica, Inc., brochure employs the use of a femoral drill jig having two posterior skids which align with the posterior surfaces of the femoral condyles and a drill bit which is caused to rest in the center of the patello-femoral (intercondylar) groove to obtain correct medial-lateral and rotational positioning of the jig prior to using the jig to bore holes in the femur to receive the fixation studs of a distal femoral prosthesis. Thus, reference points located directly on the distal femoral surface are employed to position the jig. However, the initial reaction of the distal femoral condyles is made using a jig employing an external alignment rod. Resection of the anterior and posterior aspects of the distal femoral condyles is accomplished through the use of another jig which has locking studs which are inserted into the fixation stud holes remaining in the femur after the femoral drill jig is removed.

A method for shaping the distal femoral surface employing the use of a relatively short femoral alignment rod which is positioned in the intramedullary canal is shown in a brochure entitled "New Jersey Tricompartmental Total Knee Replacement Surgical Procedure by Frederick F. Buechel, M.D.", 13 pages, issue date 1/1981, Form. No. 1280-32, from DePuy Division, Boehringer Mannheim Corporation, Warsaw, Ind. 46580.

In both of the above procedures, the alignment rods employed may not enable a surgeon to accurately follow the central long axis of the femur because the femur is not exposed to visual observation along its length. This can especially become a problem when the femur possesses a deformity which may somewhat alter its true central long axis.

SUMMARY OF THE INVENTION

There appears to be a need for a method of shaping the distal surface of a femur to receive a distal femoral prosthesis which enables a surgeon to shape that surface as accurately as possible using certain external reference points associated with the surface of the distal femur.

One object of the present invention is to provide a means by which certain reproducible reference points for the shaping of the distal femoral surface can be instrumentally located and fixed.

It is another object of the present invention to provide a fixed alignment guide upon which all femoral surface resection guiding instruments can be mounted such that the alignment of each instrument is always made relative to certain reference points located on the distal portion of the femur: the anterior surface of the distal portion of the femur, the intercondylar notch located between the medial and lateral distal femoral condyles, and the posterior aspects of the distal femoral condyles.

It is another object of the present invention to provide a method for overcoming the difficulties involved in attempting to externally locate the central long axis of the femur, particularly when the femur contains a deformity, and to enable a surgeon to more accurately shape the distal surface of a femur relative to that axis for the purpose of receiving a distal femoral prosthesis in a relatively simple manner.

These and other objects of the present invention are provided by a method which comprises placing a main body of an alignment guide having a resection guide instrument holder affixed thereto on the anterior surface of the femur wherein the holder is adjusted to hold a pivotable resection guide instrument at a preselected angle with respect to the central long axis of the main body and of the femur; inserting a locator pin through the pivot point of the holder; advancing the main body along the anterior surface of the femur until the locator pin contacts the center of the intercondylar notch of the distal femoral condyles; rotating the main body to properly align the central axis of the locator pin transversely with respect to the posterior aspects of the femoral condyles; affixing the main body to the femur; attaching a distal femoral surface shaping guide instrument to the instrument holder; modifying the distal femoral surface through the use of that instrument; attaching other guide instruments as needed and further modifying the distal femoral surface; removing the alignment guide; and completing any further shaping of the distal femoral surface.

DOCKET ALARM

Explore Litigation Insights

Docket Alarm provides insights to develop a more informed litigation strategy and the peace of mind of knowing you're on top of things.

Real-Time Litigation Alerts

Keep your litigation team up-to-date with **real-time alerts** and advanced team management tools built for the enterprise, all while greatly reducing PACER spend.

Our comprehensive service means we can handle Federal, State, and Administrative courts across the country.

Advanced Docket Research

With over 230 million records, Docket Alarm's cloud-native docket research platform finds what other services can't. Coverage includes Federal, State, plus PTAB, TTAB, ITC and NLRB decisions, all in one place.

Identify arguments that have been successful in the past with full text, pinpoint searching. Link to case law cited within any court document via Fastcase.

Analytics At Your Fingertips

Learn what happened the last time a particular judge, opposing counsel or company faced cases similar to yours.

Advanced out-of-the-box PTAB and TTAB analytics are always at your fingertips.

API

Docket Alarm offers a powerful API (application programming interface) to developers that want to integrate case filings into their apps.

LAW FIRMS

Build custom dashboards for your attorneys and clients with live data direct from the court.

Automate many repetitive legal tasks like conflict checks, document management, and marketing.

FINANCIAL INSTITUTIONS

Litigation and bankruptcy checks for companies and debtors.

E-DISCOVERY AND LEGAL VENDORS

Sync your system to PACER to automate legal marketing.