United States Patent [19]
Bell et al.

[11] **3,862,636**
[45] **Jan. 28, 1975**

[54] **COMPUTER CONTROLLED DEFIBRILLATOR**

[75] Inventors: **David Bell; William K. Hagan,** both of Omaha, Nebr.

[73] Assignee: **Health Technology Labs, Inc.,** Omaha, Nebr.

[22] Filed: **Nov. 29, 1973**

[21] Appl. No.: **420,291**

Related U.S. Application Data

[63] Continuation-in-part of Ser. No. 219,455, Jan. 20, 1972, Pat. No. 3,782,389.

[52] **U.S. Cl.** ..... **128/419 D**
[51] **Int. Cl.** **A61n 1/36**
[58] **Field of Search** ..... 128/419 D, 419 R, 421, 128/422, 423

[56] **References Cited**

UNITED STATES PATENTS

3,747,605 7/1973 Cook et al. ..... 128/419 D

FOREIGN PATENTS OR APPLICATIONS

1,076,286 2/1960 Germany

OTHER PUBLICATIONS

Tacker Jr. et al., "The American Journal of Cardiology," vol. 33, Jan. 1974, page 172.

Primary Examiner—William E. Kamm
Attorney, Agent, or Firm—Zarley, McKee, Thomte & Voorhees

[57] **ABSTRACT**

A computer controlled defibrillator comprising a set of electrodes which are engageable with a patient and which are connected to a source of electrical energy by a circuit means. The circuit means comprises storage capacitors, energy selector, computer, manual and reset switches, voltage monitor, current monitor, and output meter. The computer responds to certain external inputs, automatic and manual, and controls the output delivered to the patient. The energy selector permits the selection of the energy which is desired to be delivered to the patient. The sequence is started by closing the manual reset switch which zeroes the output meter and activates the power supply (electrical energy) at a voltage which is dependent on the energy selector. The energy derived from the power supply is stored in the storage capacitors. The energy selector, which is manually set to the energy desired, also feeds an input to the computer. When the manual switch is activated, the computer causes the stored energy source to be connected to the patient through the electrodes. The current monitor and voltage monitor feed instantaneous signals to the computer which computes the energy as a continuous integration process. When the computed energy equals the selected energy, the computer causes the energy source to be disconnected from the patient. The total energy delivered to the patient is indicated as a steady reading on the output meter. A modified form of the defibrillator is also disclosed wherein the magnitude of current in the electrical circuit means may be manually or automatically selected to enable the defibrillator to compensate for the patient's body weight.

5 Claims, 8 Drawing Figures

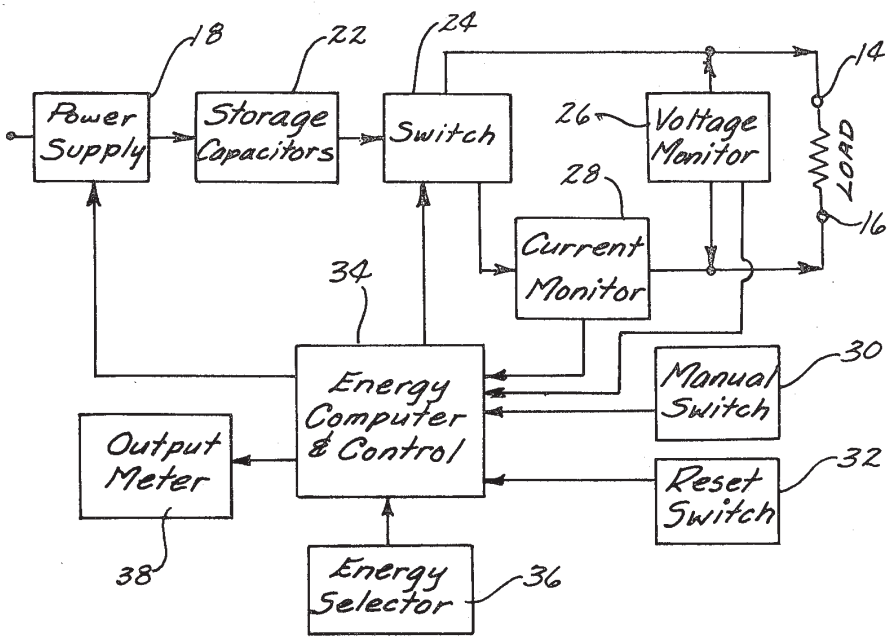

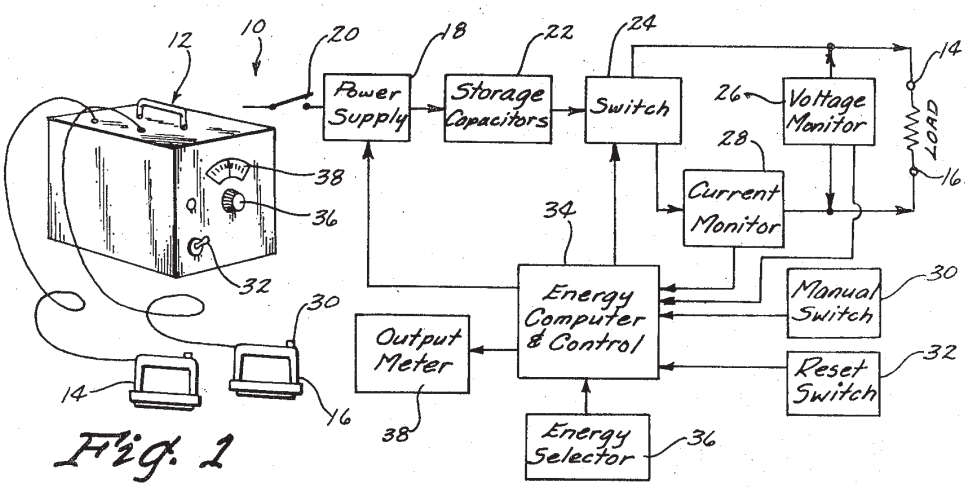

Fig. 1

Fig. 2

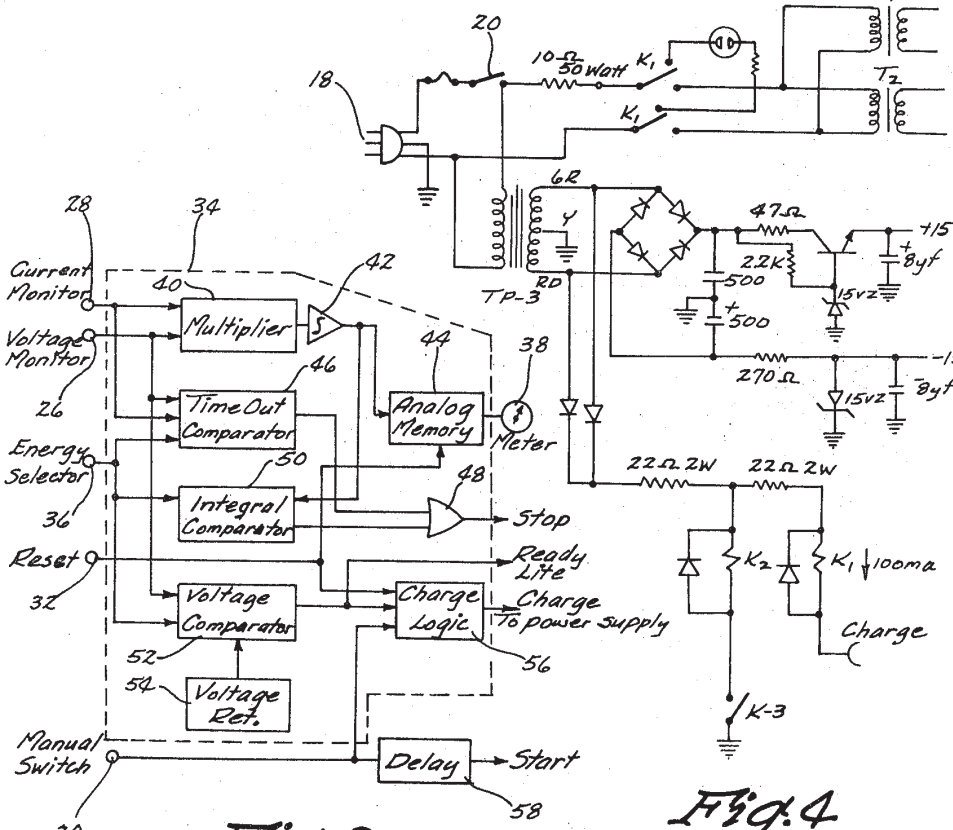

Fig. 3

Fig. 4

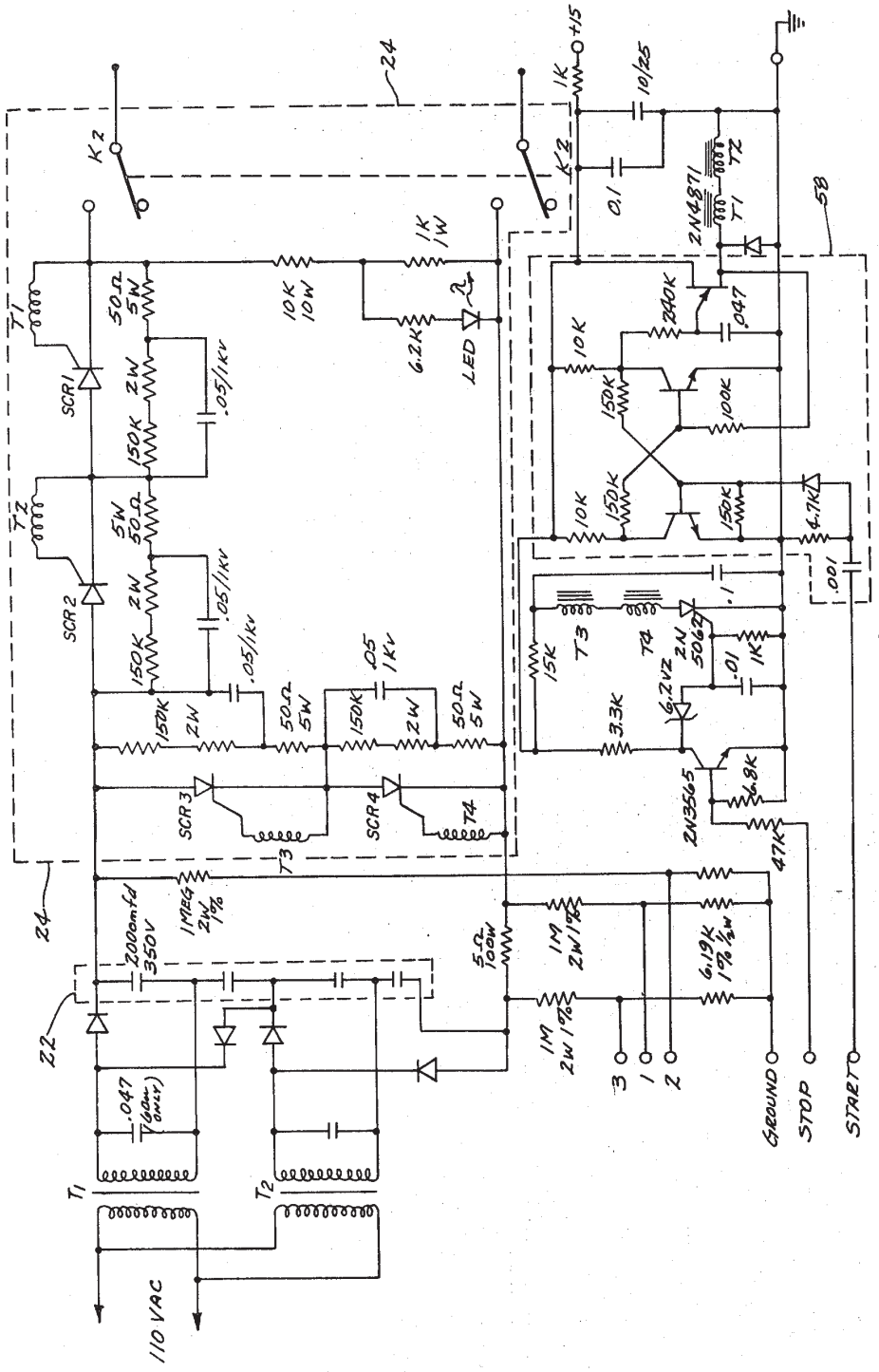

Fig. 5

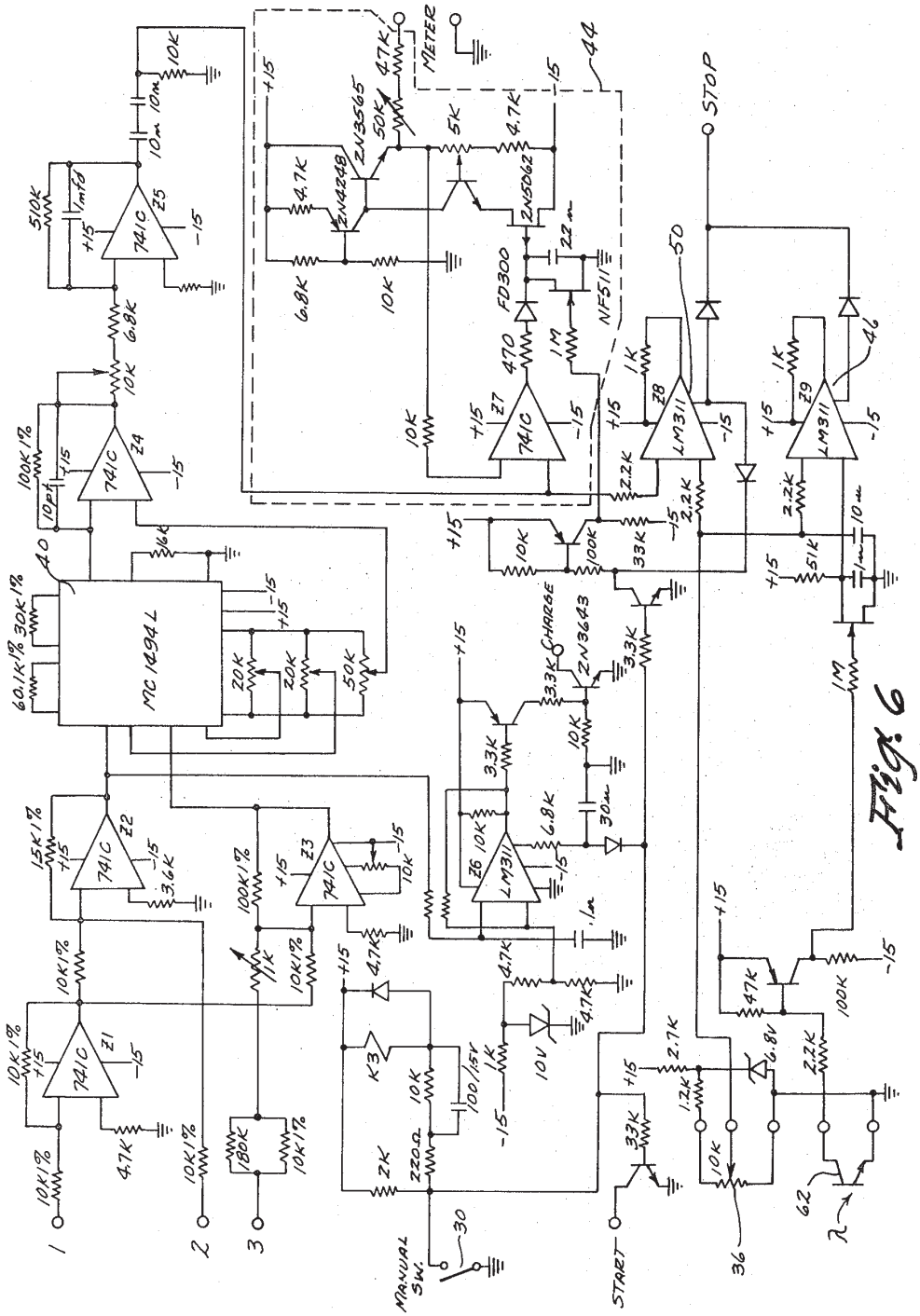

Fig. 6

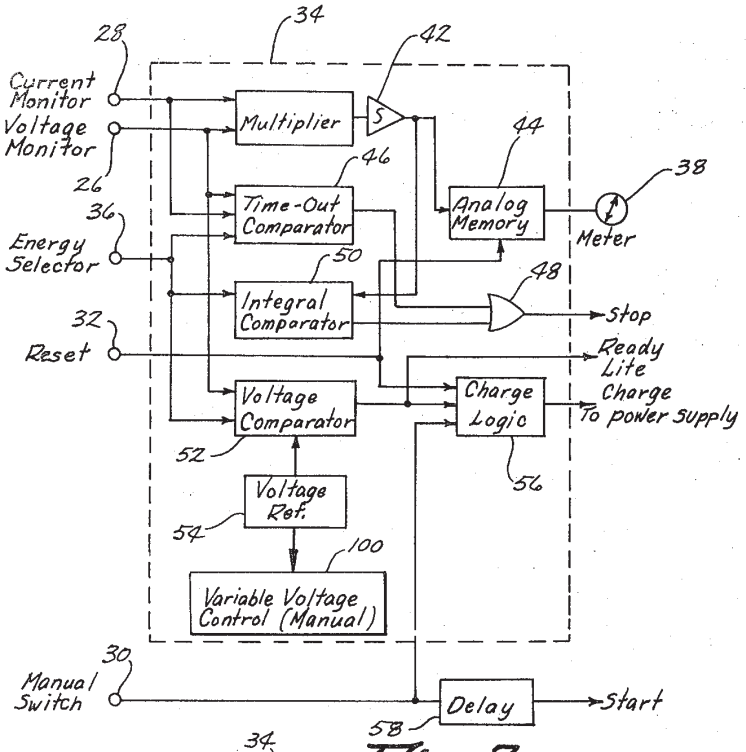

Fig. 7

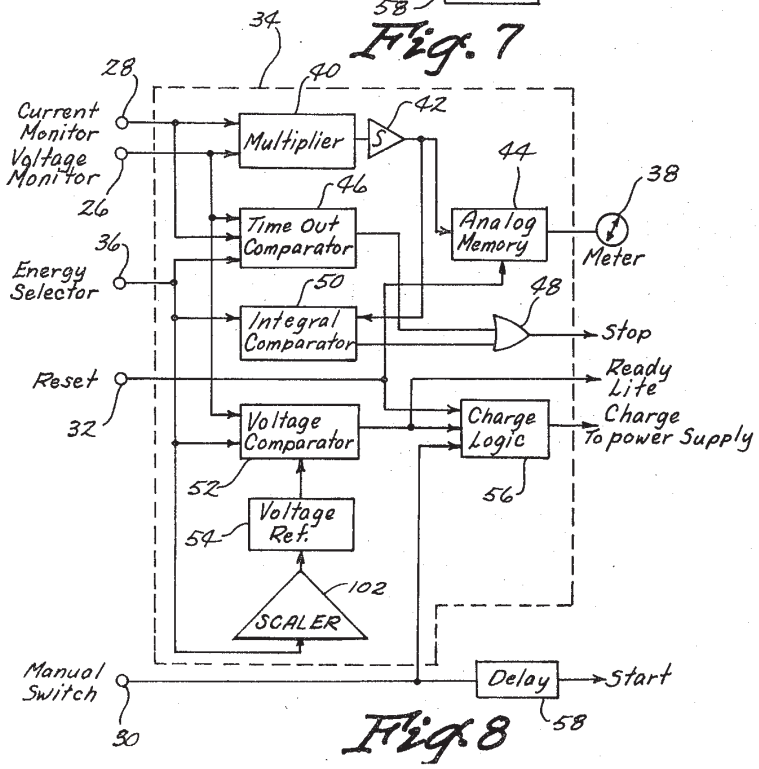

Fig. 8

DOCKET ALARM

Explore Litigation Insights

Docket Alarm provides insights to develop a more informed litigation strategy and the peace of mind of knowing you're on top of things.

Real-Time Litigation Alerts

Keep your litigation team up-to-date with **real-time alerts** and advanced team management tools built for the enterprise, all while greatly reducing PACER spend.

Our comprehensive service means we can handle Federal, State, and Administrative courts across the country.

Advanced Docket Research

With over 230 million records, Docket Alarm's cloud-native docket research platform finds what other services can't. Coverage includes Federal, State, plus PTAB, TTAB, ITC and NLRB decisions, all in one place.

Identify arguments that have been successful in the past with full text, pinpoint searching. Link to case law cited within any court document via Fastcase.

Analytics At Your Fingertips

Learn what happened the last time a particular judge, opposing counsel or company faced cases similar to yours.

Advanced out-of-the-box PTAB and TTAB analytics are always at your fingertips.

API

Docket Alarm offers a powerful API (application programming interface) to developers that want to integrate case filings into their apps.

LAW FIRMS

Build custom dashboards for your attorneys and clients with live data direct from the court.

Automate many repetitive legal tasks like conflict checks, document management, and marketing.

FINANCIAL INSTITUTIONS

Litigation and bankruptcy checks for companies and debtors.

E-DISCOVERY AND LEGAL VENDORS

Sync your system to PACER to automate legal marketing.