US006455138B1

(12) **United States Patent**
Murano

(10) **Patent No.: US 6,455,138 B1**
(45) **Date of Patent: Sep. 24, 2002**

(54) **METALLIZED SHEETING, COMPOSITES, AND METHODS FOR THEIR FORMATION**

(75) Inventor: **Adam Murano**, West Chesterfield, NH (US)

(73) Assignee: **Textron System Corporation**, Wilmington, MA (US)

(*) Notice: Subject to any disclaimer, the term of this patent is extended or adjusted under 35 U.S.C. 154(b) by 0 days.

(21) Appl. No.: **09/223,545**

(22) Filed: **Dec. 30, 1998**

Related U.S. Application Data

(60) Provisional application No. 60/070,166, filed on Dec. 31, 1997.

(51) **Int. Cl.**[7] **B32B 3/10**; B32B 15/08; B32B 27/32; B32B 27/36; B32B 27/40

(52) **U.S. Cl.** **428/201**; 428/195; 428/198; 428/206; 428/208; 428/209; 428/421; 428/422; 428/424.6; 428/425.8; 428/425.9; 428/447; 428/448; 428/450; 428/457; 428/458; 428/461; 428/462; 428/463; 428/474.4; 428/480; 428/483; 428/515; 428/516; 428/518; 428/520; 428/522; 428/523

(58) **Field of Search** ..... 428/422, 421, 428/355 R, 355 EN, 355 N, 423.1, 424.2, 424.6, 424.8, 457, 425.8, 425.9, 461, 195, 201, 203, 204, 206, 208, 209

(56) **References Cited**

U.S. PATENT DOCUMENTS

3,118,781 A		1/1964	Downing	117/33.3
3,916,048 A	*	10/1975	Walles	428/35
4,101,698 A		7/1978	Dunning et al.	428/31
4,115,619 A		9/1978	Kurfman et al.	428/336
4,188,358 A		2/1980	Withoos et al.	264/255
4,211,822 A		7/1980	Kurfman et al.	428/412
4,215,170 A		7/1980	Vilaprinyo	428/328
4,403,004 A		9/1983	Parker et al.	428/31
4,407,871 A		10/1983	Eisfeller	428/31
4,431,711 A		2/1984	Eisfeller	428/31
4,503,189 A	*	3/1985	Igarashi et al.	525/104
4,713,143 A		12/1987	Eisfeller	156/655
5,174,434 A		12/1992	Bourgoine	198/803.01
5,198,272 A		3/1993	Eisfeller	427/251
5,284,679 A		2/1994	Eisfeller et al.	427/240
5,290,625 A		3/1994	Eisfeller et al.	428/216
5,320,869 A		6/1994	Eisfeller et al.	427/250
5,384,161 A		1/1995	Eisfeller et al.	427/250
5,464,661 A		11/1995	Lein et al.	427/409
5,468,518 A		11/1995	Lein et al.	427/421

FOREIGN PATENT DOCUMENTS

EP	0358445 A2	3/1990
EP	0392082 A2	10/1990
EP	0616906 A2	9/1994
WO	WO 96/33026	10/1996

* cited by examiner

Primary Examiner—Vivian Chen
(74) *Attorney, Agent, or Firm*—Hamilton, Brook, Smith & Reynolds, P.C.

(57) **ABSTRACT**

A metallized composite comprising a first thermoplastic layer, a discontinuous intermediate layer comprising discrete islands of metal in an adhesive, and a second thermoplastic layer. The metallized composites of the invention can be employed as reflective surfaces, such as are used as mirrors or substitutes for chrome trim on automobiles. A particularly preferred metal as a component of the discontinuous layer of the composite is indium.

36 Claims, 3 Drawing Sheets

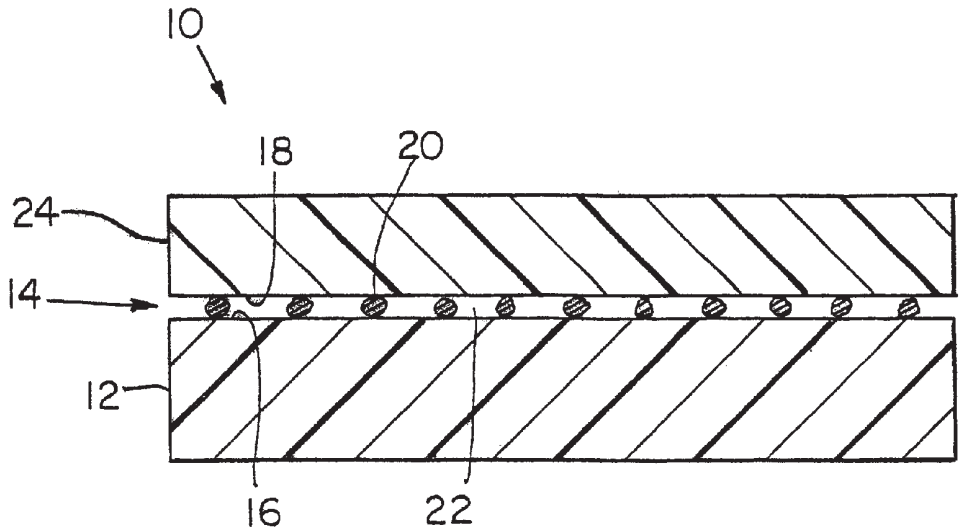

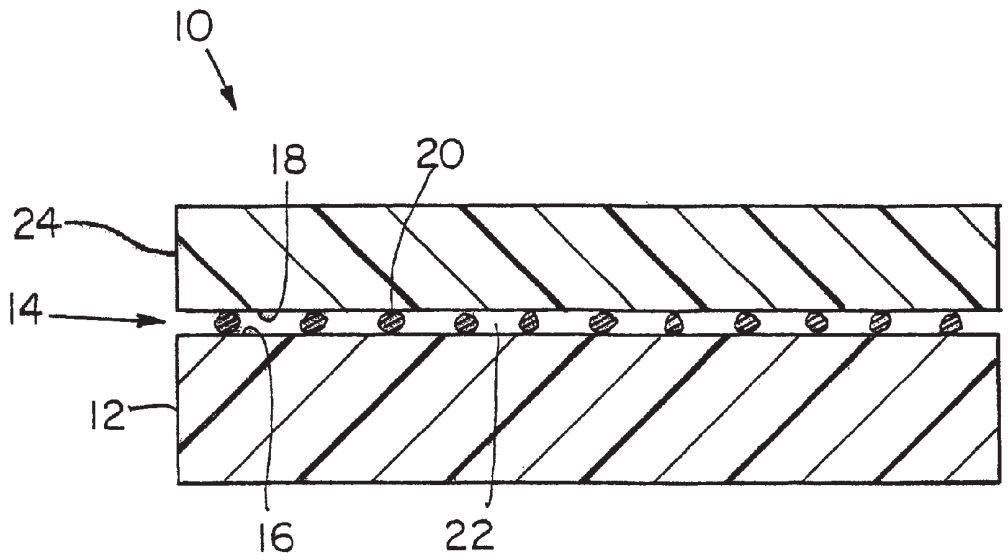

FIG. 1

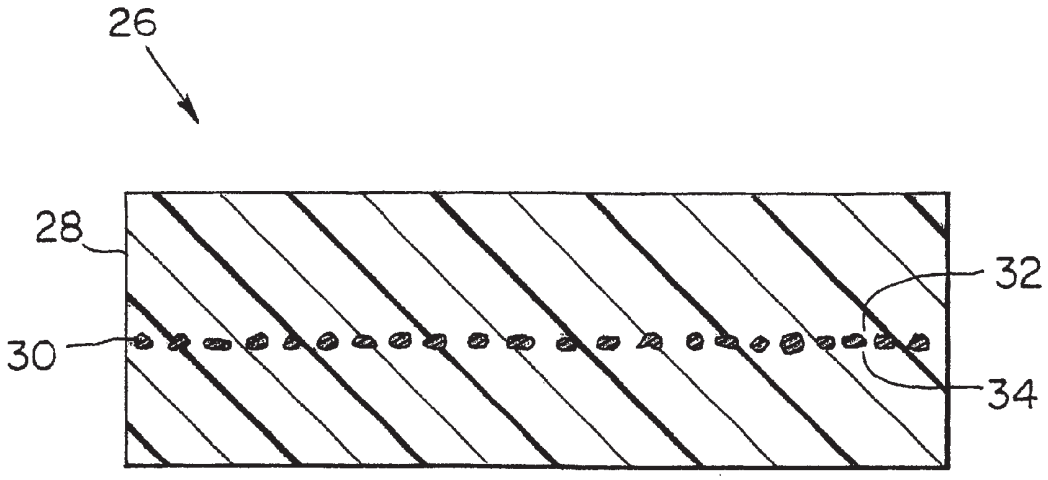

FIG. 2

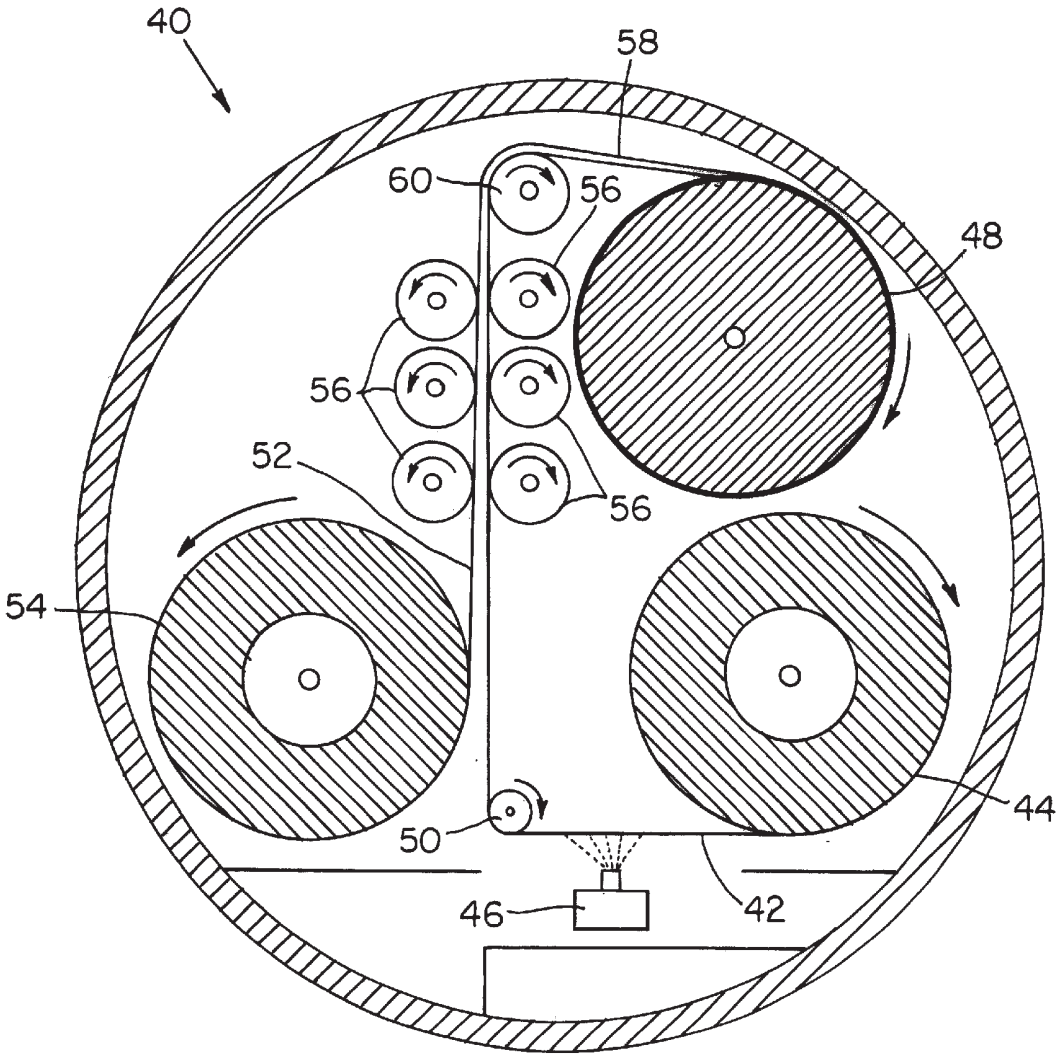

FIG. 3

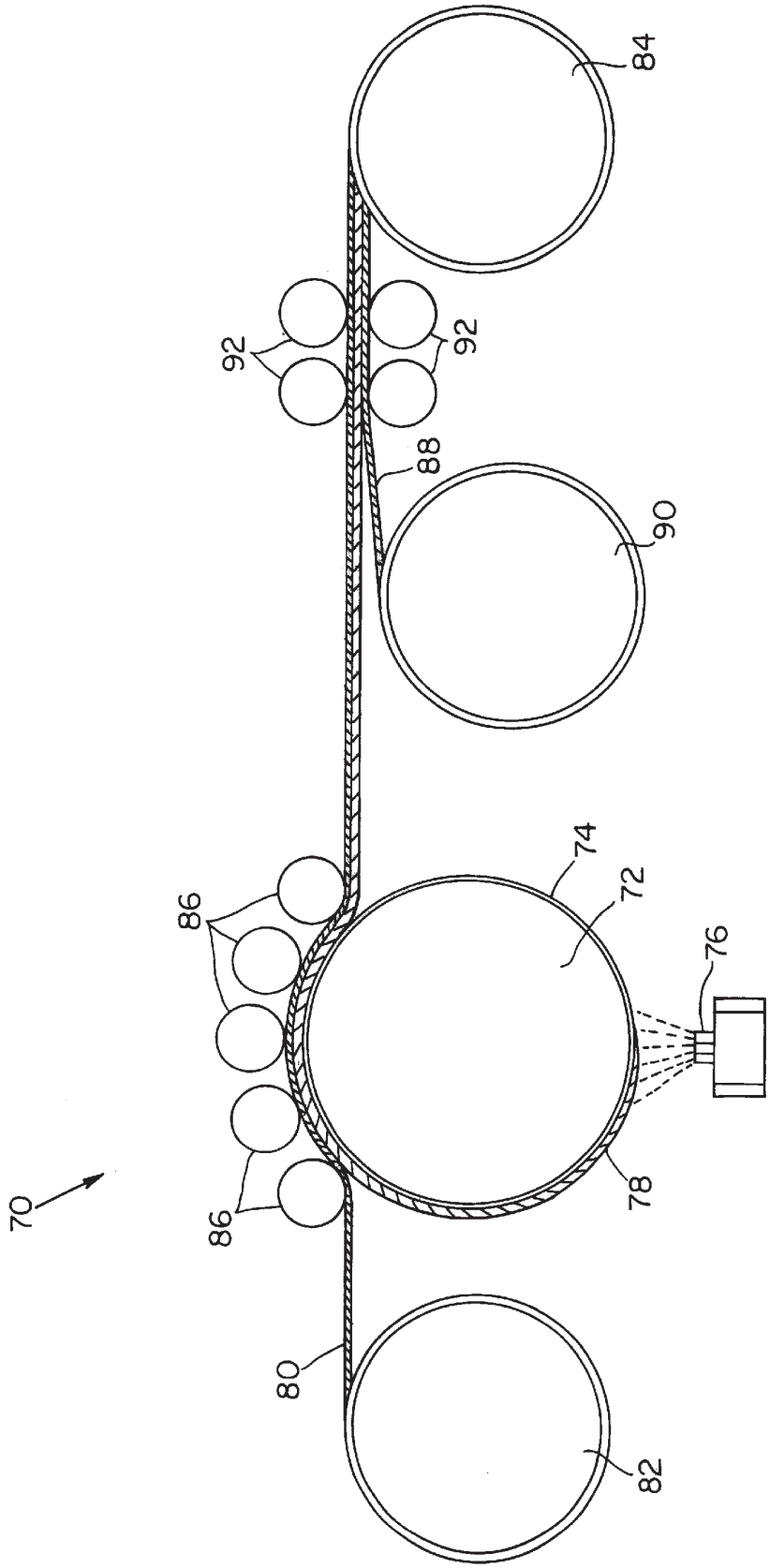

FIG. 4

METALLIZED SHEETING, COMPOSITES, AND METHODS FOR THEIR FORMATION

RELATED APPLICATION

This application claims priority to U.S. Provisional Application No. 60/070,166, filed Dec. 31, 1997, the contents of which are incorporated herein by reference in their entirety.

BACKGROUND OF THE INVENTION

Metallized polymer sheeting is now commonly employed as a substitute for decorative chrome parts, especially in the automotive industry. Typically, such metallized polymer sheeting includes a layer of metal disposed between two polymer sheets.

There are several problems, however, with many types of known metallized polymer sheets. For example, laminates typically include an electrically continuous metal layer sandwiched between two polymer sheets. Such materials are often subject to delamination consequent to poor binding between the metal layer and the polymer layers on either side. Further, corrosion of the metal layer, which is usually aluminum can spread between the polymer layers, thereby causing significant diminution in appearance.

One attempt to reduce the likelihood of delamination and loss of appearance resulting from corrosion of the metal layer has been to form a discontinuous metal layer on a polymer basecoat, such as a resinous urethane. A monomer top-coat, such as a solvent-based aliphatic urethane, is then deposited on the discontinuous metal layer, and subsequently polymerized to encapsulate metal islands of the discontinuous metal layer and to bond them to the polymer basecoat.

However, formations of metal islands on various types of polymers can be difficult. Also, bonding of a urethane top layer during polymerization to a polyurethane basecoat can be poor. One attempt to improve adhesion has been to etch the basecoat and discontinuous metal layer with a sodium hydroxide solution to remove residual metal between islands of the discontinuous metal layer. A limitation to this method is that etching can result in the formation of blackened areas in the metal layer, thereby detracting from the appearance of the resulting laminated part.

There are several other problems that can be associated with polymerizing a top layer in situ to form metallized polymeric sheeting. For example, polyurethanes, in particular, generally are not sufficiently hydrophobic to prevent weathering over extended periods of time and are easily attacked by sodium hydroxide and acids, such as nitric acid. Thicker layers of polyurethane top-coat are difficult to form because in situ polymerization can cause the resulting composite to appear irregular. In addition, evaporation of a solvent component during polymerization of urethanes can cause "popping" or bubbles to form, also diminishing the appearance of the finished product. Further, methods which employ deposition of a basecoat, such as a resinous urethane basecoat, require that the basecoat be applied to a substrate, from which the resulting metallized composite generally cannot be removed. Therefore, the utility of this method for forming various products, having different applications, is limited.

Therefore, a need exists for a metallized composite and a method for forming such a metallized composite that overcomes or minimizes the above-referenced problems.

SUMMARY OF THE INVENTION

The present invention is directed to a metallized sheeting, such as a formable metallized plastic sheet, and a composite.

The invention is also directed to a method for forming the sheeting and composite.

In one embodiment, the invention is a formable metallized plastic sheet which, upon molding, does not cause degradation of reflectivity of the metal sheet.

In another embodiment, metallized composite includes a first thermoplastic layer and a discontinuous layer on the first layer. The discontinuous layer is formed of discrete islands of metal in an adhesive. A second thermoplastic layer is disposed over the discontinuous layer, whereby the discontinuous layer is between said first and second thermoplastic layers.

In still another embodiment, the metallized sheeting includes a continuous thermoplastic sheet and at least one discontinuous layer of metal within said thermoplastic sheet.

The method includes depositing a metal on a first thermoplastic layer to form a discontinuous layer of the metal. A second thermoplastic layer is laminated onto the discontinuous layer.

The present invention has several advantages. For example, neither thermoplastic layer of the composite is polymerized in situ. Rather, the thermoplastic layers are laminated together to sandwich the discontinuous layer of metal islands in an adhesive bedding. Consequently, a wider variety of polymers can be employed to form the composite, thereby enabling greater opportunity for improving specific qualities of the composite and for tailoring construction of the composite for specific uses. For example, the choice of polymerized web materials can be selected for improved formation of discrete metal islands, such as by combining a particular metal with a polymer web that minimizes residual metal between metal islands. Alternatively, a polymer web can be selected that is preferably suitable for specific methods of metal deposition. By minimizing the amount of metal that remains between metal islands of the discontinuous layer, the need for etching can be significantly reduced or eliminated.

Further, because a top polymeric layer is not formed in situ, greater thicknesses can be employed without diminishing the appearance of the finished product, thereby improving resistance to environmental use conditions, such as weathering. In some instances, a plasma of unsaturated monomers, such as acrylates or methacrylates, may need to be polymerized on indium in vacuo; in such instances, the top layer would be added in another operation. Also, evaporation of solvents during polymerization is eliminated, thereby preventing "popping" and other potential processing problems. Moreover, a wider variety of methods of forming the composite can be employed, such as by depositing metal islands first on a thermoplastic drum surface, and subsequently transferring the metal islands to a first continuous thermoplastic web. A second thermoplastic web can then be applied over the discontinuous layer to form the composite. In other embodiments, the first and second thermoplastic webs can be bonded to each other by melting, use of an adhesive, or by compression. All of these processing options provide potential sources for reducing the cost of production and increasing overall product quality and productivity.

Different polymers can be employed for the two thermoplastic sheets, thereby further broadening the utility of the composites of the invention. In addition, neither the first nor the second thermoplastic web is bound to a substrate. Consequently, composites of the invention can be made to be flexible. Specific applications of flexible reflectors or mirrors can include adjustable rear-view mirrors for use in automobiles and as substitutes for conventional chrome-

DOCKET ALARM

Explore Litigation Insights

Docket Alarm provides insights to develop a more informed litigation strategy and the peace of mind of knowing you're on top of things.

Real-Time Litigation Alerts

Keep your litigation team up-to-date with **real-time alerts** and advanced team management tools built for the enterprise, all while greatly reducing PACER spend.

Our comprehensive service means we can handle Federal, State, and Administrative courts across the country.

Advanced Docket Research

With over 230 million records, Docket Alarm's cloud-native docket research platform finds what other services can't. Coverage includes Federal, State, plus PTAB, TTAB, ITC and NLRB decisions, all in one place.

Identify arguments that have been successful in the past with full text, pinpoint searching. Link to case law cited within any court document via Fastcase.

Analytics At Your Fingertips

Learn what happened the last time a particular judge, opposing counsel or company faced cases similar to yours.

Advanced out-of-the-box PTAB and TTAB analytics are always at your fingertips.

API

Docket Alarm offers a powerful API (application programming interface) to developers that want to integrate case filings into their apps.

LAW FIRMS

Build custom dashboards for your attorneys and clients with live data direct from the court.

Automate many repetitive legal tasks like conflict checks, document management, and marketing.

FINANCIAL INSTITUTIONS

Litigation and bankruptcy checks for companies and debtors.

E-DISCOVERY AND LEGAL VENDORS

Sync your system to PACER to automate legal marketing.