Exhibit 1003 (continued)

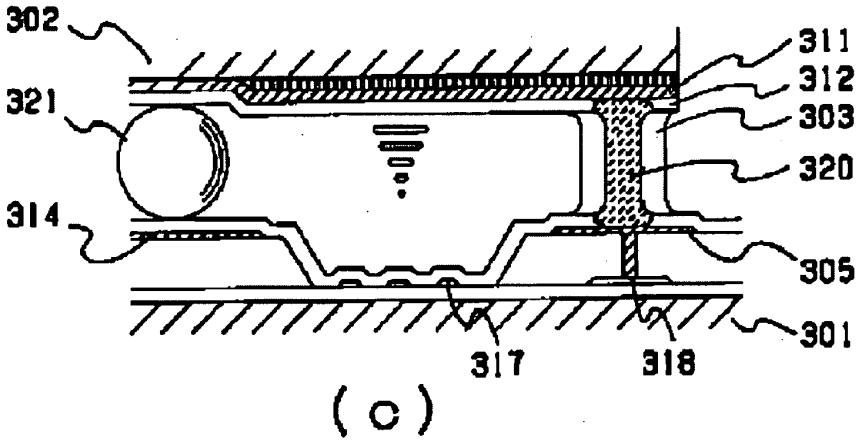

Also, the Official Action notes "an electroconductive adhesive (320) between first substrate and the second substrate … and in contact with … common potential 305 and facing electrode (311)" (pages 7-8, Paper No. 0070919). The Official Action concedes that Kiyofumi '415 "fails to disclose the conductive spacers over the second interlayer insulating film which [is in] contact with both the second conductive film and third conductive film" (page 8, Paper No. 20070703).

The Official Action relies on Tsuda '510 to allegedly teach conductive particles 37 (Figure 9, reproduced below).

【図6】

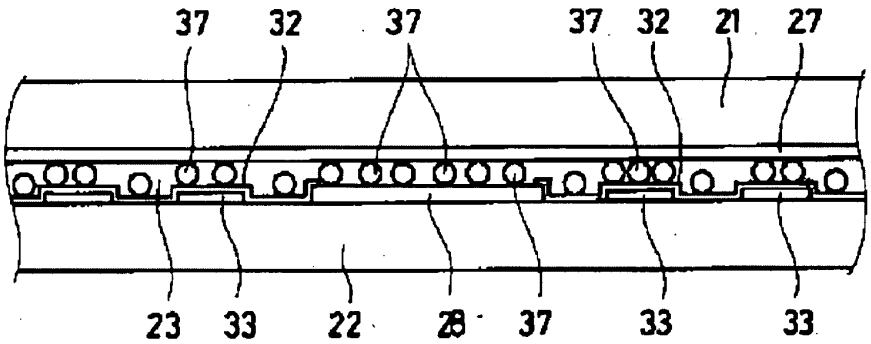

Alternately, the Official Action relies on Saiuchi '941 to allegedly teach spacers 8 or conductive fine spheres 29 (Figures 1 and 5, reproduced below).

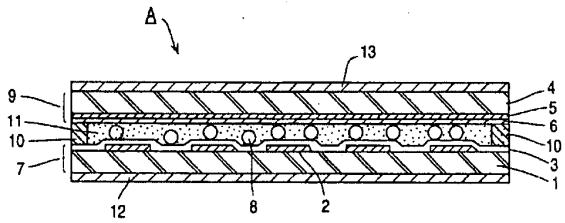

FIG. 1

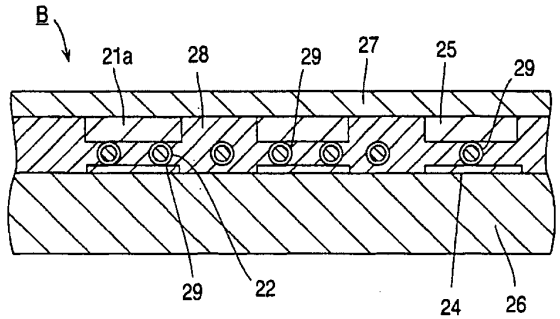

FIG. 5

Without any specific references to Kiyofumi '415 or Tsuda '510 in support and without statements which establish the level of ordinary skill in the art at the time of the present invention, the Official Action asserts that "[it] would have been obvious ... to replace the electroconductive adhesive [320] of the [Kiyofumi] '415 publication, which only creates an electrical connection, with the conductive particles [37] of the [Tsuda] '510 publication, which both creates an electrical connection and regulates the cell gap, because the added function of regulating the cell gap improves the clearness of images displayed by the liquid crystal display device" (page 8, Paper No. 20070703).

Alternately, again without any specific references to Kiyofumi '415 or Saiuchi '941 in support and without statements which establish the level of ordinary skill in the art at the time of the present invention, the Official Action asserts that "one ... would be motivated to replace the electro-conductive adhesive [320] of the [Kiyofumi] '415 publication, which only creates an electrical connection, with the gold coated conductive particles [8/29] of the [Saiuchi] '941 patent, which both creates an electrical connection and regulates the cell gap, because the added function of regulating the cell gap improves the clearness of images displayed by the liquid crystal display device" (page 8, Paper No. 20070703). The Applicant respectfully disagrees and traverses the above assertions in the Official Action.

There is insufficient reason to replace the electroconductive adhesive 320 of Kiyofumi '415 with either the conductive particles 37 of Tsuda '510 or the spacers 8/29 of Saiuchi '941. The Official Action asserts that the conductive particles 37 of Tsuda '510 or the spacers 8/29 of Saiuchi '941 are necessary to regulate cell gap (pages 8 and 9, Paper No. 20070703). However, in Kiyofumi '415, the gap agents 321 already

regulate the cell gap, thus the alleged modification of Kiyofumi '415 is redundant. Also, the conductive particles 37 of Tsuda '510 and the spacers 8/29 of Saiuchi '941 are compressible. The cell gap appears to be regulated, for example, by spacers 11 in Tsuda '510 and, for example, by sealing material 10 in Saiuchi '941 formed at the periphery of the device. Further, it would appear that additional modifications would need to be made to Kiyofumi '415 in order to accommodate the conductive particles 37 of Tsuda '510 or the spacers 8/29 of Saiuchi '941. Such extensive modifications are not taught or suggested in the references. During the interview, the Examiner agreed with the Applicant's position in this matter.

If one were to rely on gap agents 321 of Figure 3(c) of Kiyofumi '415 to correspond with the conductive spacers of the present claims, it is noted that the facing electrode 311 (allegedly the third conductive film) does not appear to make direct contact with the gap agents 321 and that the pad 305 also does not appear to make direct contact with the gap agents 321. Further, the gap agents 321 are non-conductive. As such, the gap agents 321 of Kiyofumi '415 are not conductive spacers. Further, if it is asserted that gap agents 321 of Kiyofumi should be replaced by the conductive particles 37 of Tsuda '510 or the spacers 8/29 of Saiuchi '941, then such proposed modification of Kiyofumi '415 would appear to destroy the functionality of Kiyofumi '415 by short-circuiting the device (if gap agents 321 are replaced with conductive spacers). In addition, one of skill in the art would not be motivated to make any such modification because Tsuda '510 and Saiuchi '941 do not disclose the multilayer structure of insulating layers and conductive layers. Since the contact portion of Kiyofumi '415 has a multilayer structure and a contact hole, one would need to consider the gap between the surfaces of the substrates, if a conductive particle would be used. On the other hand, since the conductive particle can be compressed in a certain range, the cell gap would need to be considered. When using conductive adhesive as in Kiyofumi '415, however, since the size of conductive adhesive can be easily changed, one does not need to care about the cell gap when using conductive adhesive.

Therefore, the Applicant respectfully submits that the Official Action has not provided a proper or sufficient reason, either in the references themselves or in the

knowledge generally available to one of ordinary skill in the art, to modify Kiyofumi '415 and Tsuda '510 or Saiuchi '941 or to combine reference teachings to achieve the claimed invention.

In the present application, it is respectfully submitted that the prior art of record, either alone or in combination, does not expressly or impliedly suggest the claimed invention and the Official Action has not presented a convincing line of reasoning as to why the artisan would have found the claimed invention to have been obvious in light of the teachings of the references.

For the reasons stated above, the Official Action has not formed a proper *prima facie* case of obviousness. Accordingly, reconsideration and withdrawal of the rejections under 35 U.S.C. § 103(a) are in order and respectfully requested.

Rejections based on Moriyama '333

The rejections based on Moriyama '333 appear to be based, at least in part, on a misunderstanding on the part of the third party requester of the relationship between the various Figures in Moriyama '333. It appears that one cause of confusion when interpreting the Moriyama '333 reference is the relationship between Figures 6 and 7 and Figures 4 and 5. Specifically, Figure 7(a) is a cross section through a "terminal portion" (paragraph [0003] of the English translation) of Figure 6 at section E-E' or F-F' (reproduced below).

DOCKET ALARM

Explore Litigation Insights

Docket Alarm provides insights to develop a more informed litigation strategy and the peace of mind of knowing you're on top of things.

Real-Time Litigation Alerts

Keep your litigation team up-to-date with **real-time alerts** and advanced team management tools built for the enterprise, all while greatly reducing PACER spend.

Our comprehensive service means we can handle Federal, State, and Administrative courts across the country.

Advanced Docket Research

With over 230 million records, Docket Alarm's cloud-native docket research platform finds what other services can't. Coverage includes Federal, State, plus PTAB, TTAB, ITC and NLRB decisions, all in one place.

Identify arguments that have been successful in the past with full text, pinpoint searching. Link to case law cited within any court document via Fastcase.

Analytics At Your Fingertips

Learn what happened the last time a particular judge, opposing counsel or company faced cases similar to yours.

Advanced out-of-the-box PTAB and TTAB analytics are always at your fingertips.

API

Docket Alarm offers a powerful API (application programming interface) to developers that want to integrate case filings into their apps.

LAW FIRMS

Build custom dashboards for your attorneys and clients with live data direct from the court.

Automate many repetitive legal tasks like conflict checks, document management, and marketing.

FINANCIAL INSTITUTIONS

Litigation and bankruptcy checks for companies and debtors.

E-DISCOVERY AND LEGAL VENDORS

Sync your system to PACER to automate legal marketing.